AC3S1–02

COMPONENTS

Access Cab, Standard Cab:

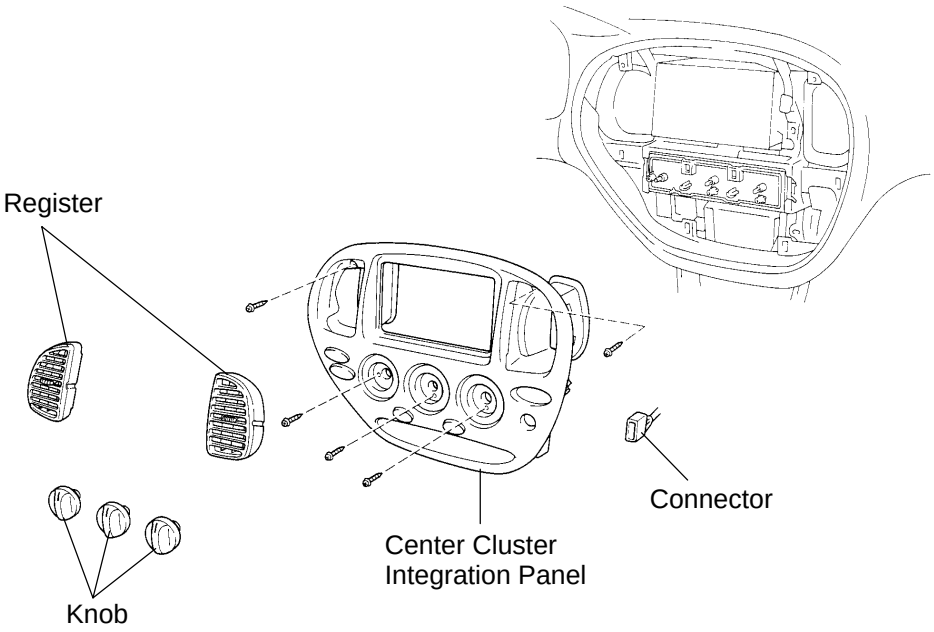

N

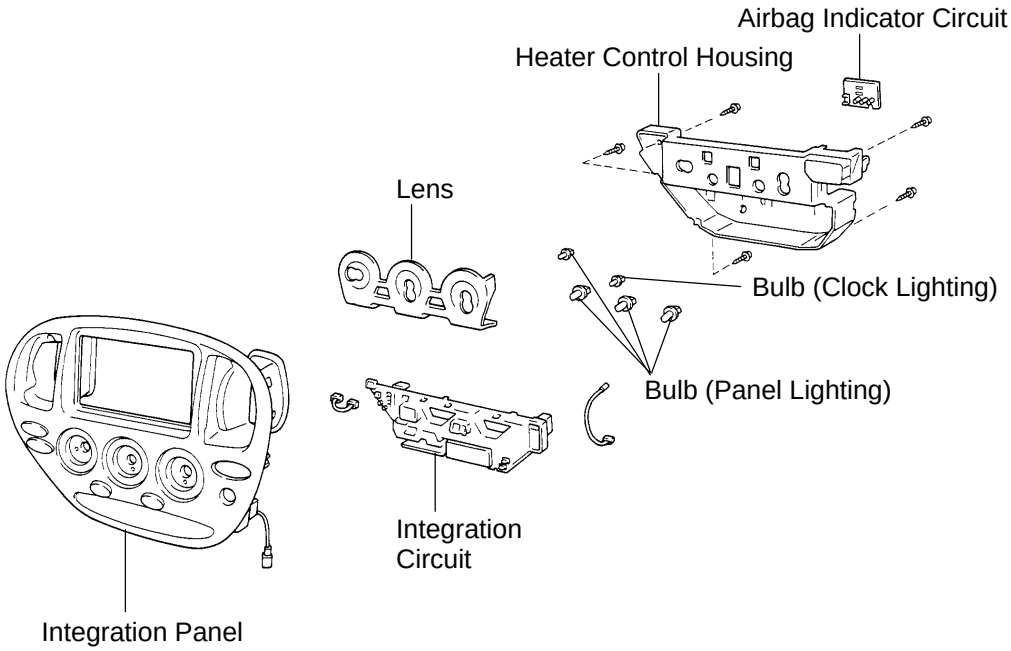

I11181
I11182

N

I11200

Double Cab:

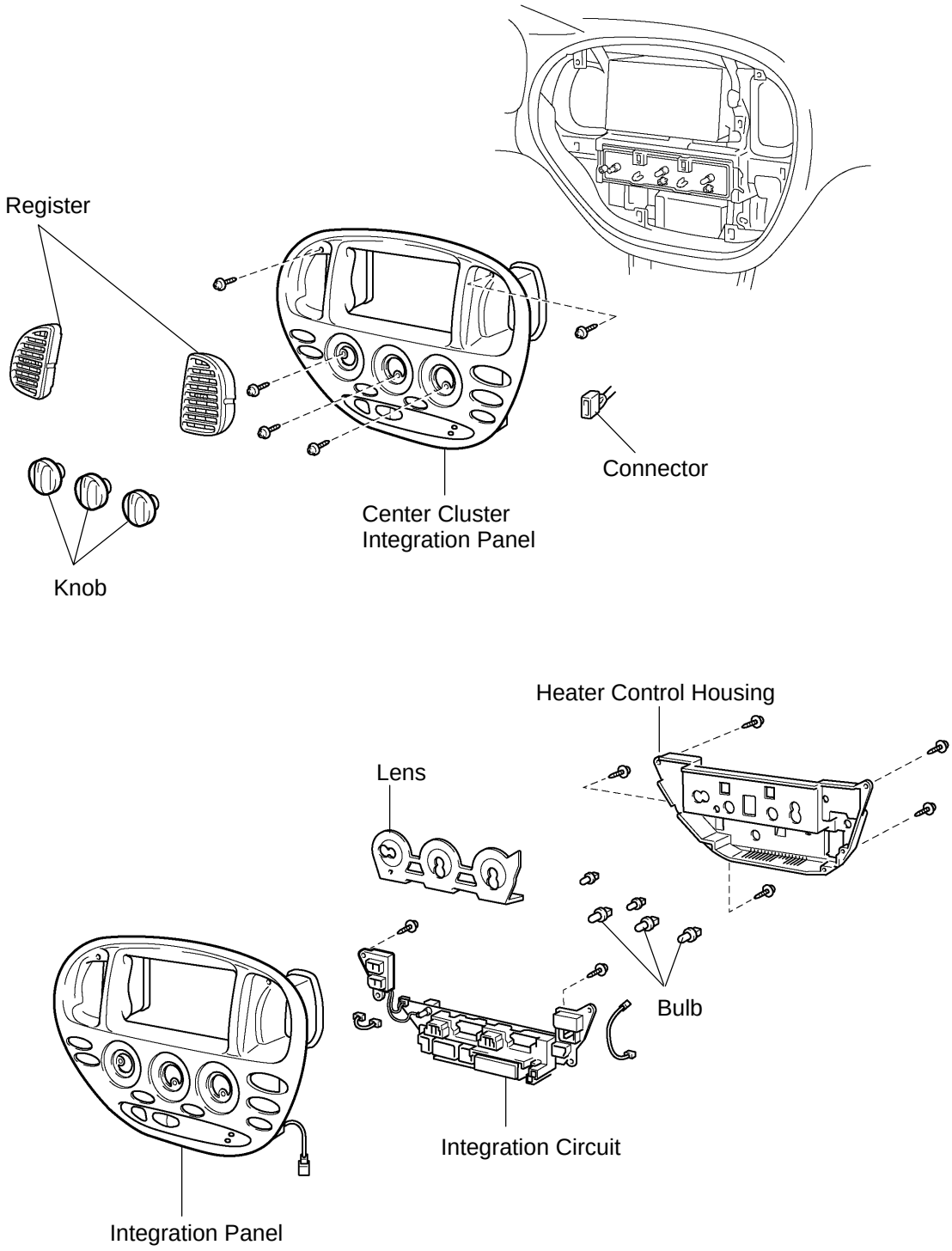

N

I27026

AC3S2−02

DISASSEMBLY

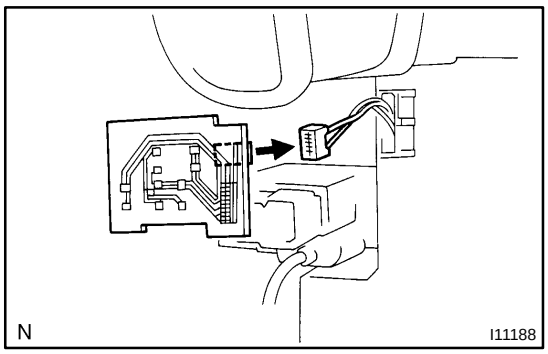

1. Access cab, Standard cab:
REMOVE AIRBAG INDICATOR CIRCUIT

Release the 2 claws and remove the indicator circuit, then disconnect the connector.

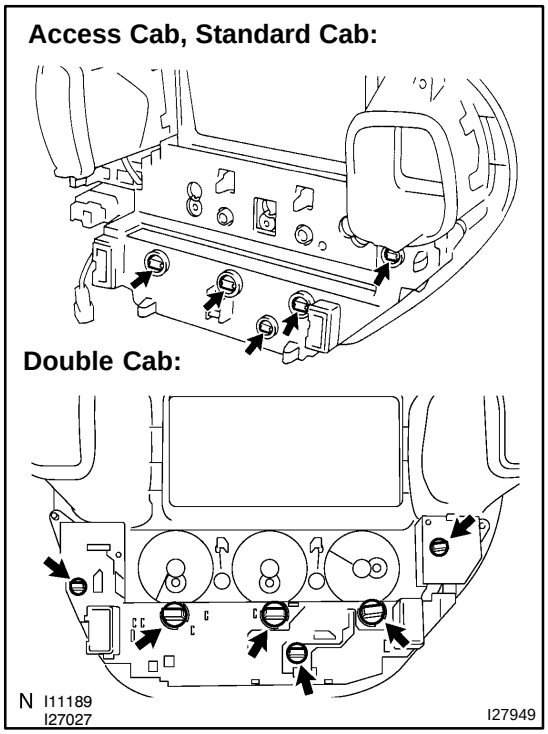

2. REMOVE BULBS

(a) Access cab, standard cab:
Remove the 5 bulbs.

(b) Double cab:
Remove the 6 bulbs.

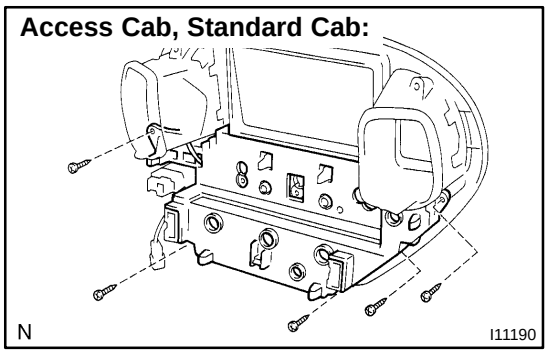

3. Access cab, Standard cab:
REMOVE HEATER CONTROL HOUSING

(a) Remove the 5 screws.

(b) Remove the heater control housing.

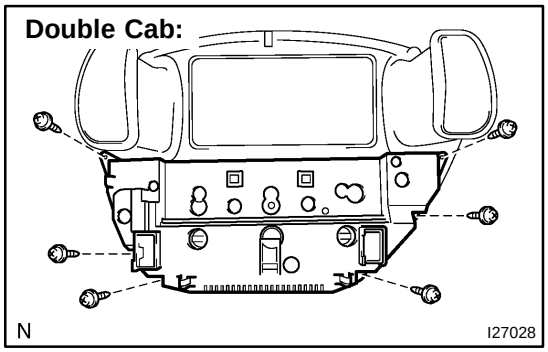

4. Double cab:
REMOVE HEATER CONTROL HOUSING

(a) Remove the 5 screws.

(b) Remove the heater control housing.

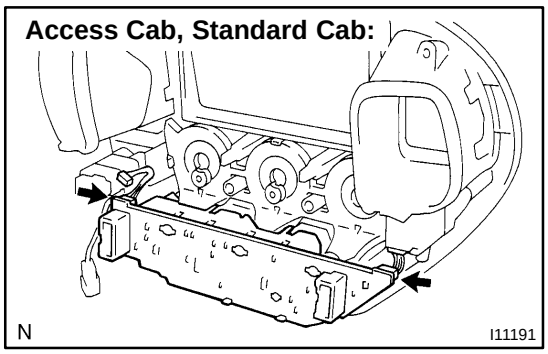

5. Access cab, Standard cab:
REMOVE INTEGRATION CIRCUIT

(a) Disconnect the 2 connectors.
(b) Remove the circuit.

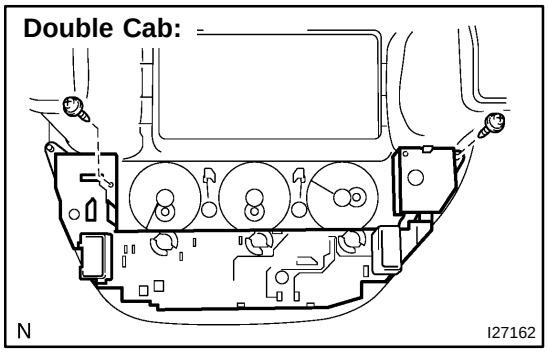

6. Double cab:
REMOVE INTEGRATION CIRCUIT

(a) Remove the 2 screws.
(b) Remove the circuit.

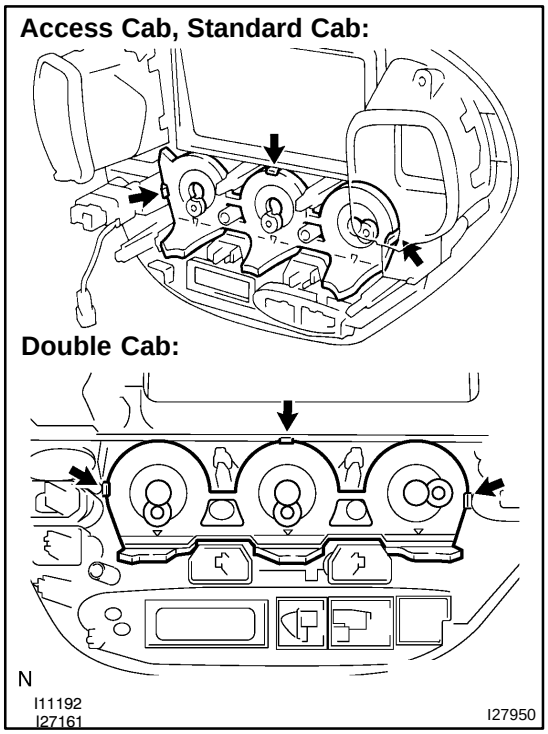

7. REMOVE LENS

Release the 3 claws, then remove the lens.

AC3S3−02

INSPECTION

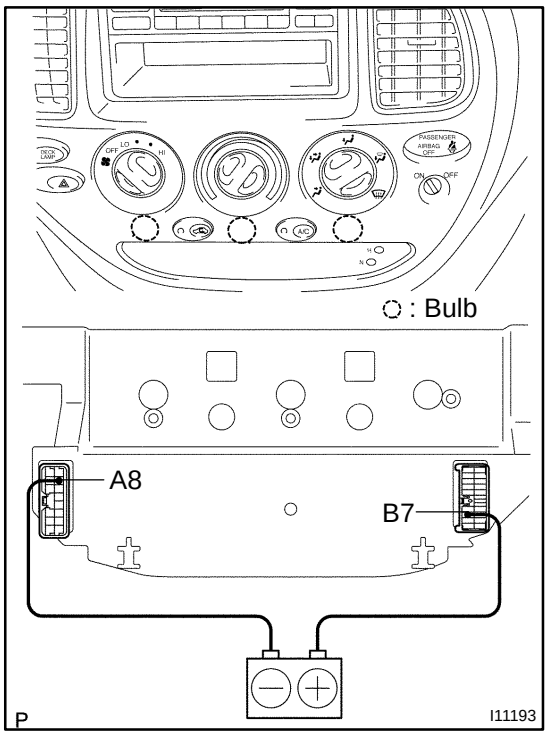

1. Access cab, Standard cab:
INSPECT ILLUMINATION OPERATION

Connect the positive (+) lead from the battery to terminal B7 and the negative (−) lead to terminal A8 then check that the illuminations lights up.
If operation is not as specified, check the faulty bulb.

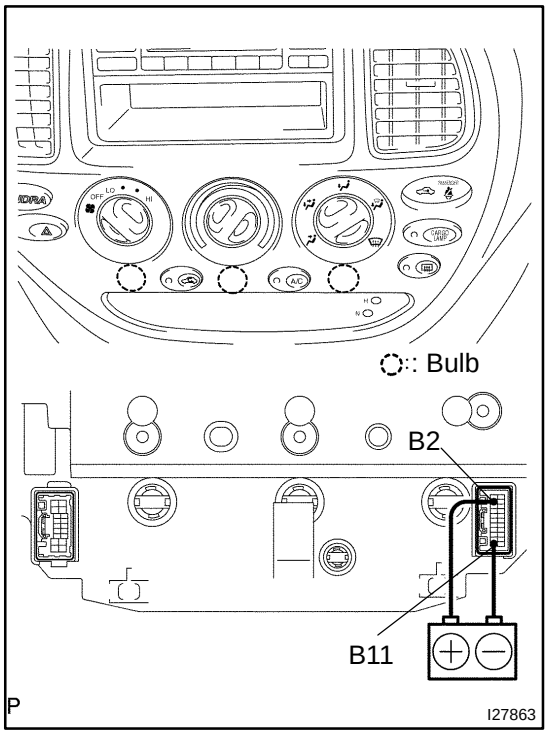

2. Double cab:
INSPECT ILLUMINATION OPERATION

Connect the positive (+) lead from the battery to terminal B2 and the negative (−) lead to terminal B11 then check that the illuminations lights up.
If operation is not as specified, check the faulty bulb.

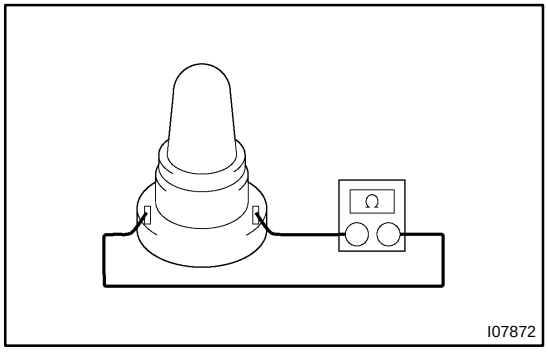

3. INSPECT BULB

Set the tester as shown in the illustration to check for continuity.
If continuity exists, replace the heater control.
If no continuity exists, replace the bulb.

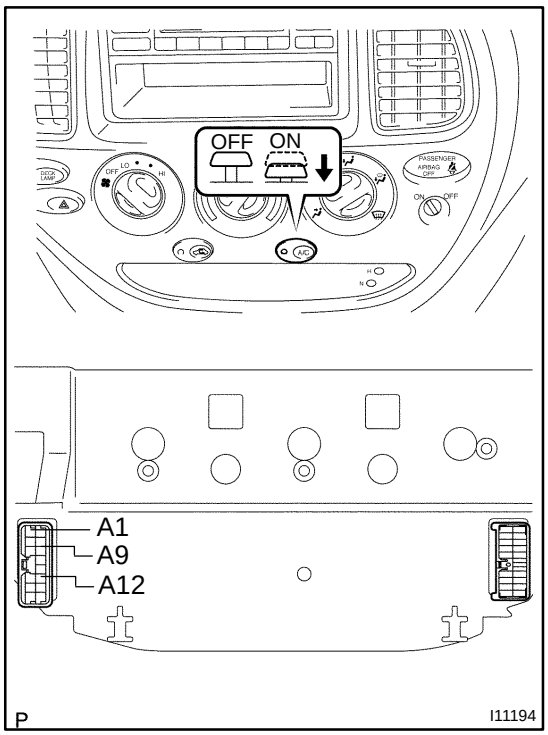

4. Access cab, Standard cab:
INSPECT A/C SWITCH CONTINUITY
Standard:

Switch condition	Tester connection	Specified condition
OFF	A12 − A9	No continuity
ON	A12 − A9	Continuity

If operation is not as specified, replace the integration circuit bulb.

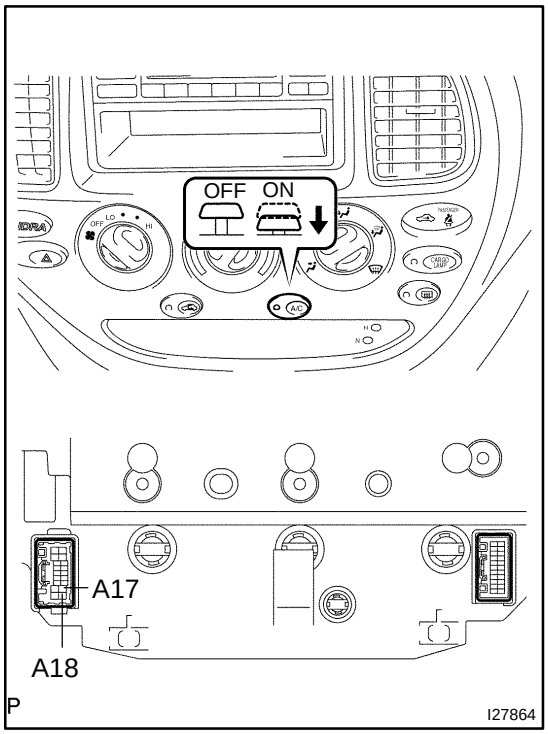

5. Double cab:
INSPECT A/C SWITCH CONTINUITY
Standard:

Switch condition	Tester connection	Specified condition
OFF	A17 − A18	No continuity
ON	A17 − A18	Continuity

If operation is not as specified, replace the integration circuit bulb.

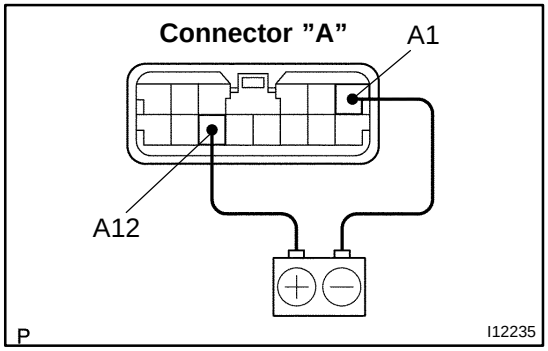

6. Access cab, Standard cab:
INSPECT A/C INDICATOR OPERATION

(a) Connect the positive (+) lead from the battery to terminal A12 and the negative (−) lead to terminal A1.

(b) Push the A/C button in and check that the A/C indicator lights up.

If operation is not as specified, replace the integration circuit.

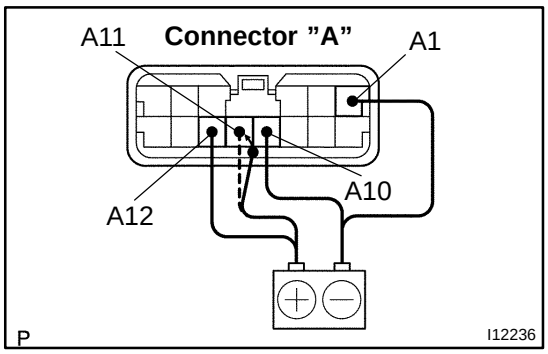

(c) Connect the positive (+) lead from the battery to terminal A11 and the negative (−) lead to terminal A10, then check that the indicator dims.

If operation is not as specified, replace the integration circuit.

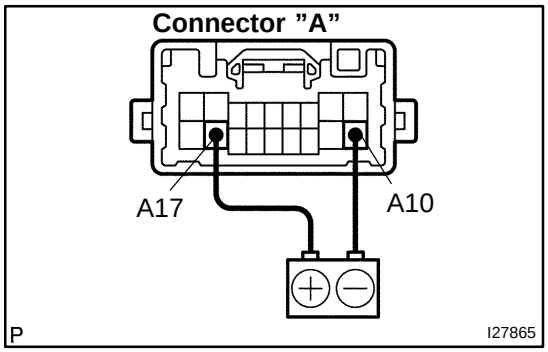

7. Double cab:
INSPECT A/C INDICATOR OPERATION

(a) Connect the positive (+) lead from the battery to terminal A17 and the negative (−) lead to terminal A10.

(b) Push the A/C button in and check that the A/C indicator lights up.

If operation is not as specified, replace the integration circuit.

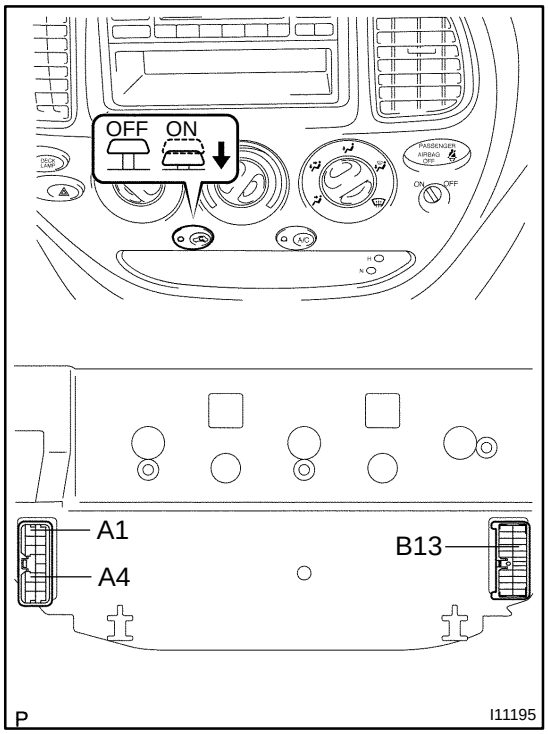

8. Access cab, Standard cab:
INSPECT AIR INLET CONTROL SWITCH CONTINUITY

Switch condition	Tester connection	Specified condition
OFF	B13 − A1	No continuity
ON	B13 − A1	Continuity
Illumination circuit	A4 − B13	Continuity

If operation is not as specified, replace the integration circuit bulb

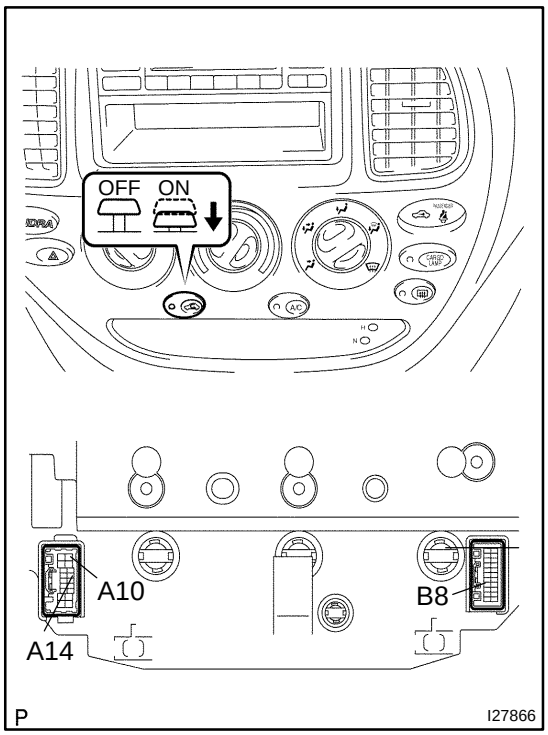

9. Double cab:
INSPECT AIR INLET CONTROL SWITCH CONTINUITY

Switch condition	Tester connection	Specified condition
OFF	B8 − A10	No continuity
ON	B8 − A10	Continuity
Illumination circuit	A14 − B8	Continuity

If operation is not as specified, replace the integration circuit bulb

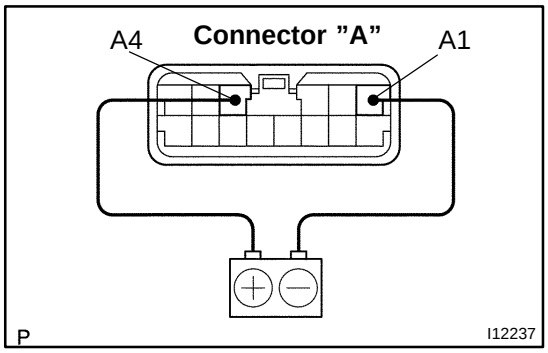

10. Access cab, Standard cab:
INSPECT AIR INLET INDICATOR OPERATION

(a) Connect the positive (+) lead from the battery to terminal A4 and the negative (−) lead to terminal A1.

(b) Push the air inlet button in and check that the air inlet indicator lights up.

If operation is not as specified, replace the integration circuit.

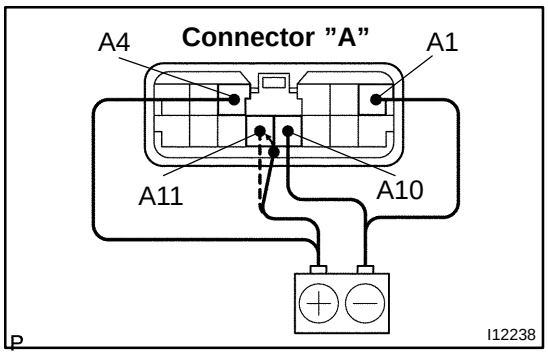

(c) Connect the positive (+) lead from the battery to terminal A11 and the negative (−) lead to terminal A10, then check that the indicator dims.

If operation is not as specified, replace the integration circuit.

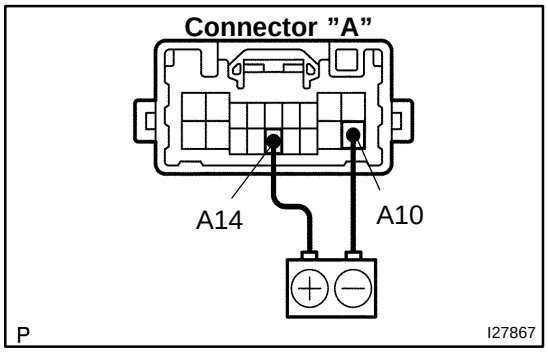

11. Double cab:
INSPECT AIR INLET INDICATOR OPERATION

(a) Connect the positive (+) lead from the battery to terminal A14 and the negative (−) lead to A10.

(b) Push the air inlet button in and check that the air inlet indicator lights up.

If operation is not as specified, replace the integration circuit.

AC27I−02

INSTALLATION

The installation procedures are the removal procedures in reverse order (see page AC−89).

AIR CONDITIONING CONTROL ASSEMBLY (Center Cluster Integration)

AC3S0–02

ON–VEHICLE INSPECTION

1. **REMOVE CENTER CLUSTER INTEGRATION PANEL (See page AC–89)**
2. **Access cab, Standard cab:**
   INSPECT A/C CONTROL ASSEMBLY CIRCUIT

(a) Disconnect the connectors from the A/C control assembly and inspect the connectors on the wire harness side, as shown in the chart below.

Test condition:

Turn the ignition switch to ON

Wire harness side

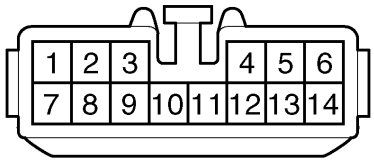

Connector ”A”

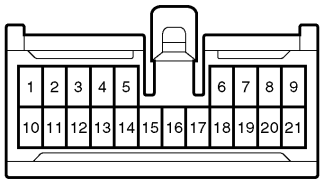

Connector ”B”

I11149
I11150
I11198

Tester connection	Condition	Specified condition
A1 – Ground	Constant	Continuity
A4 – Ground	Turn ignition switch to ON	Battery positive voltage
	Turn ignition switch OFF	No voltage
A5 – Ground	Constant	Battery positive voltage
A13 – Ground	Turn ignition switch to ACC	Battery positive voltage
	Turn ignition switch OFF	No voltage
B11 – Ground (5VZ–FE engine)	Constant	Continuity
B20 – B10	Evaporator temperature at 25°C (77°F)	1.5 kΩ

If the result is as specified, replace the amplifier with a new one.
If the result is not as specified, inspect the circuits connected to other parts.

(b) Connect the connectors to the A/C control assembly and inspect the connectors on the wire harness side from the back side, as shown in the chart below.
Test condition:
- Run the engine at idle speed
- Set the manifold gauge set

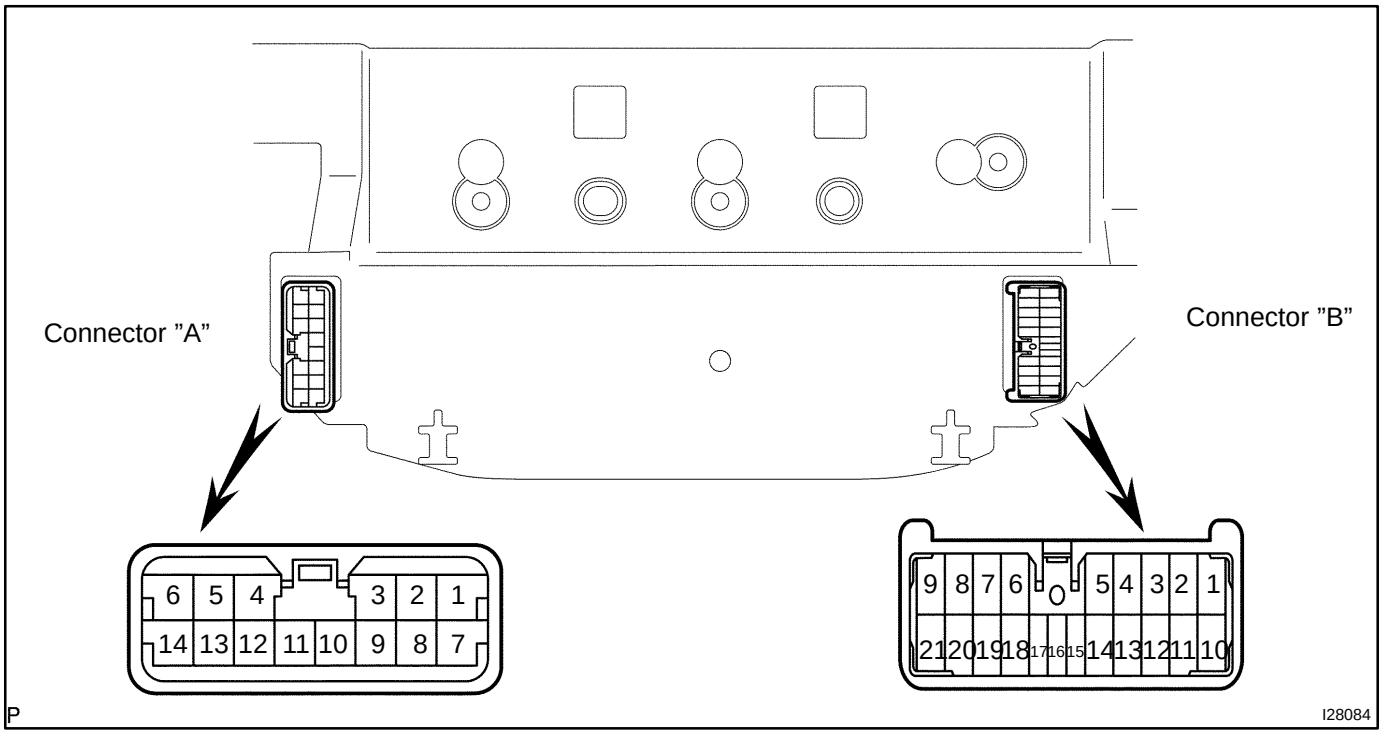

Tester connection	Condition	Specified condition
B1 − Ground	Constant	Continuity
B8 − Ground	Magnetic clutch is engaged	Battery positive voltage
	Magnetic clutch is not engaged	Below 1.0 V
B13 − Ground	Air inlet switch ”FRESH”	Below 1.0 V
	Air inlet switch ”RECIRC”	Battery positive voltage
B15 − Ground	Air inlet switch ”RECIRC”	Below 1.0 V
	Air inlet switch ”FRESH”	Battery positive voltage
B19 − Ground	A/C switch ON	Below 1.0 V
	A/C switch OFF	Battery positive voltage

If the result is as specified, replace the amplifier with a new one.
If the result is not as specified, inspect the circuits connected to other parts.

3. Double cab:
INSPECT A/C CONTROL ASSEMBLY CIRCUIT

(a) Disconnect the connectors from the A/C control assembly and inspect the connectors on the wire harness side, as shown in the chart below.
Test condition:
Turn the ignition switch to ON

Wire harness side

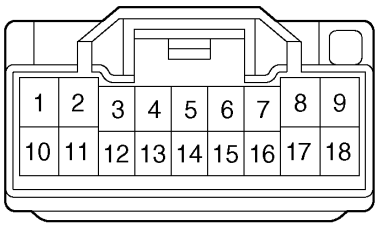

I27444
I27431

Connector ”A”

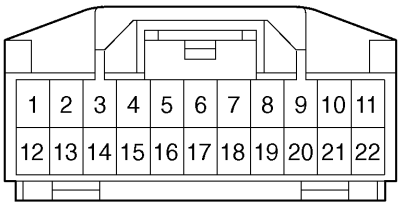

Connector ”B”

I28026

Tester connection	Condition	Specified condition
A10 − Ground	Constant	Continuity
A14 − Ground	Turn ignition switch ON	Battery positive voltage
	Turn ignition switch OFF	No voltage
A15 − Ground	Constant	Battery positive voltage
A9 − Ground	Turn ignition switch to ACC	Battery positive voltage
	Turn ignition switch OFF	No voltage

If the result is as specified, replace the amplifier with a new one.
If the result is not as specified, inspect the circuits connected to other parts.

(b) Connect the connectors to the A/C control assembly and inspect the connectors on the wire harness side from the back side, as shown in the chart below.
Test condition:

- Run the engine at idle speed
- Set the manifold gauge set

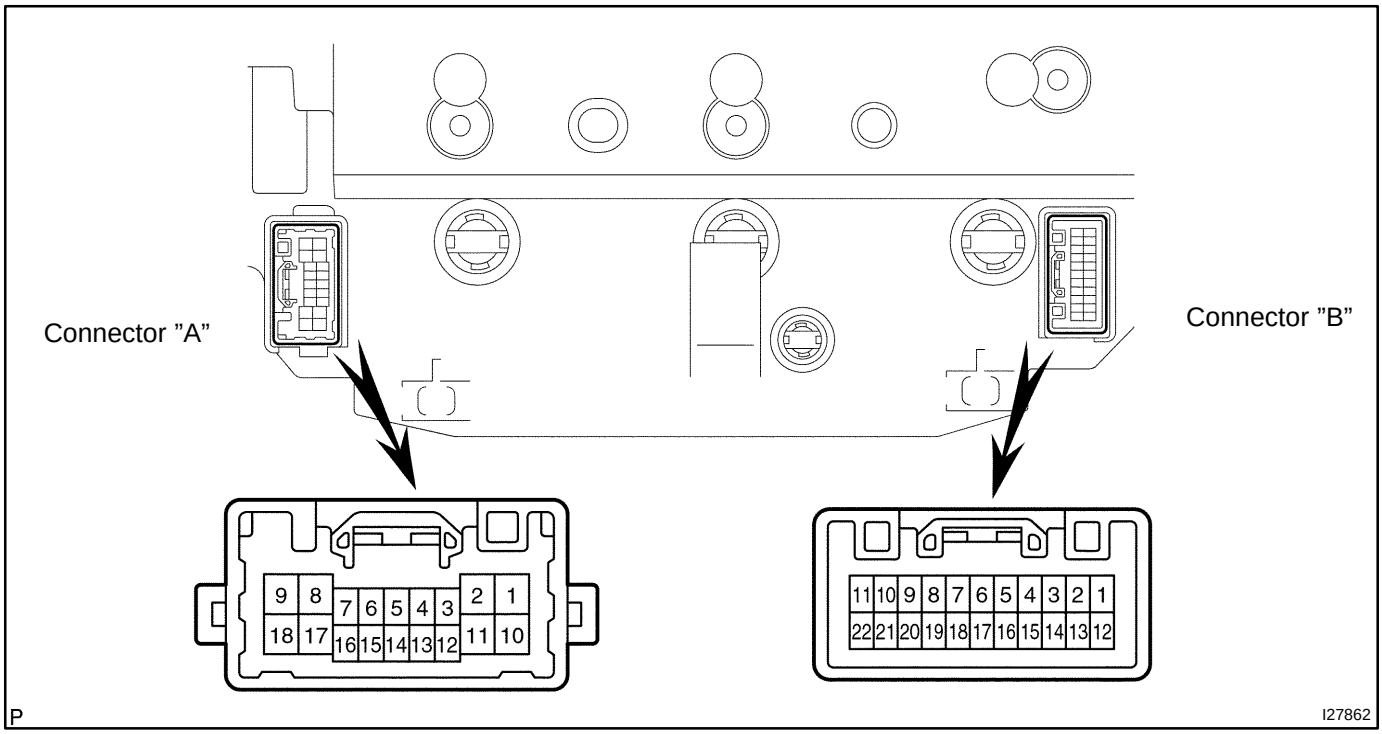

Tester connection	Condition	Specified condition
A10 − Ground	Constant	Continuity
A18 − Ground	Magnetic clutch is engaged	Battery positive voltage
	Magnetic clutch is not engaged	Below 1.0 V
B8 − Ground	Air inlet switch ”FRESH”	Battery positive voltage
	Air inlet switch ”RECIRC”	Below 1.0 V
B7 − Ground	Air inlet switch ”RECIRC”	Battery positive voltage
	Air inlet switch ”FRESH”	Below 1.0 V
B12 − Ground	A/C switch ON	9.0 V
	A/C switch OFF	Below 1.0 V

If the result is as specified, replace the amplifier with a new one.
If the result is not as specified, inspect the circuits connected to other parts.

AC3S4−02

REASSEMBLY

1. INSTALL LENS

Install the lens.

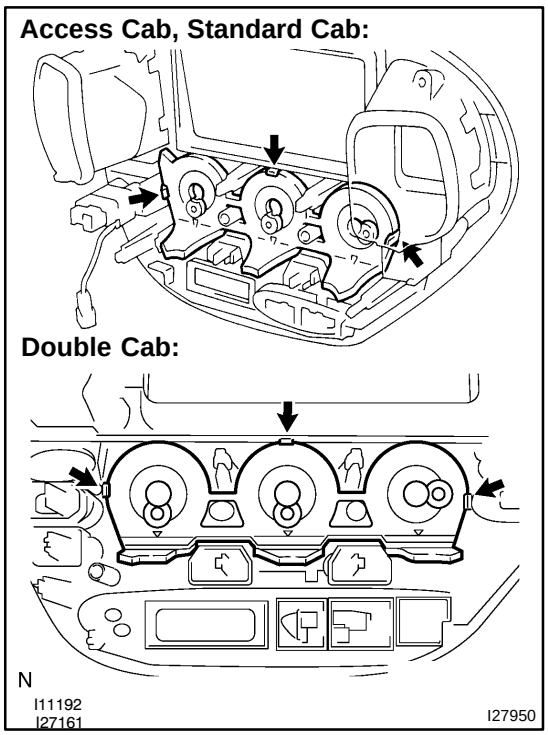

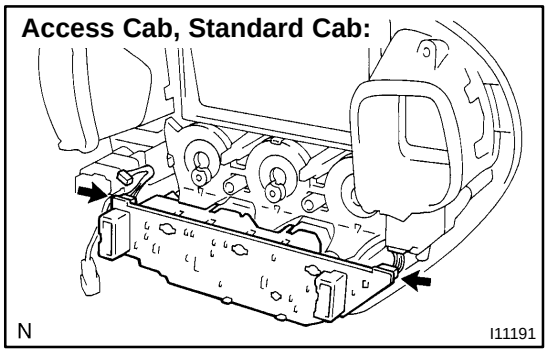

2. Access cab, Standard cab: INSTALL INTEGRATION CIRCUIT

(a) Connect the 2 connectors.

(b) Install the circuit.

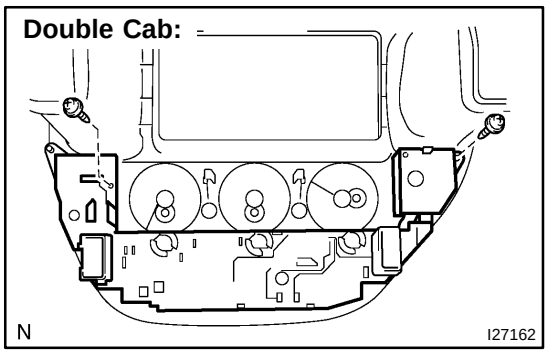

3. Double cab: INSTALL INTEGRATION CIRCUIT

(a) Install the circuit.

(b) Install the 2 screws.

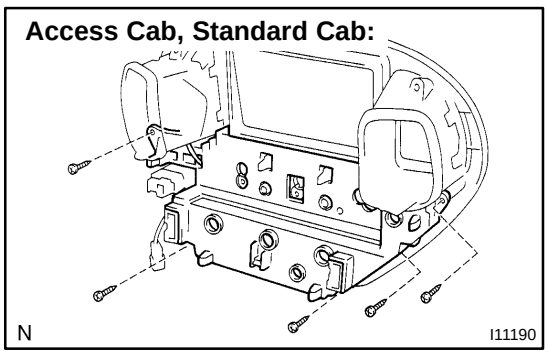

4. Access cab, Standard cab: INSTALL HEATER CONTROL HOUSING

(a) Connect the connector.

(b) Install the heater control housing.

(c) Install the 5 screws.

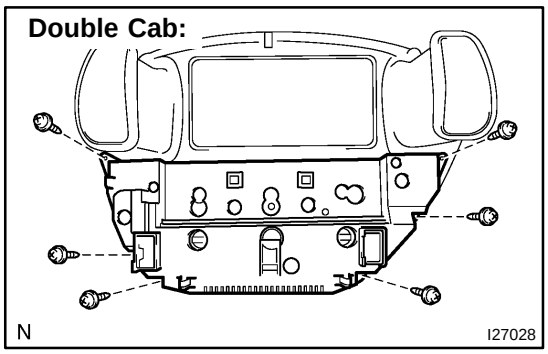

5. Double cab:
INSTALL HEATER CONTROL HOUSING

(a) Install the heater control housing.

(b) Install the 6 screws.

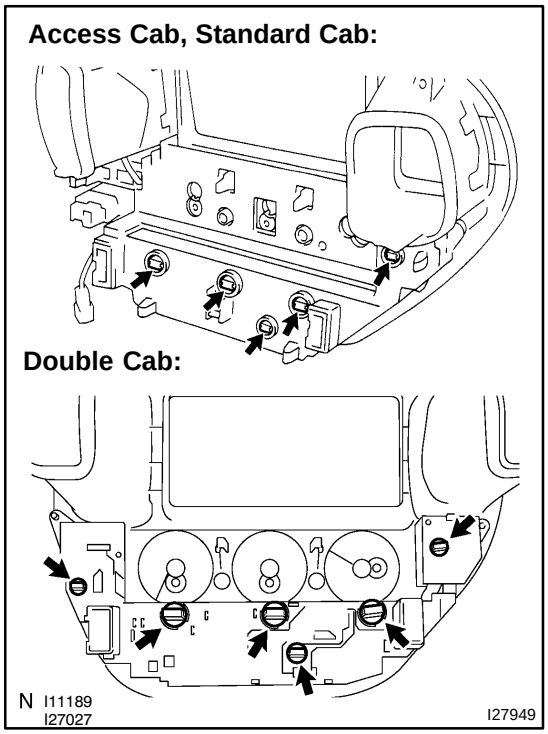

6. INSTALL BULBS

(a) Access cab, standard cab:
Install the 5 bulbs.

(b) Double cab:
Install the 6 bulbs.

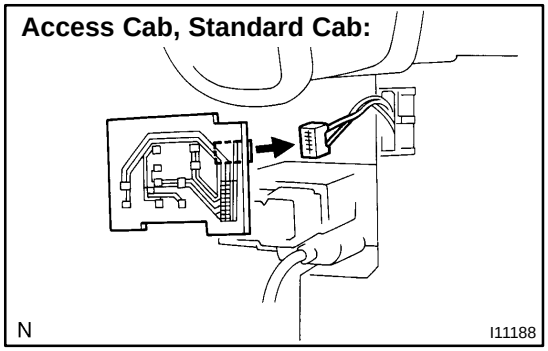

7. Access cab, Standard cab:
INSTALL AIRBAG INDICATOR CIRCUIT

(a) Connect the connector.

(b) Install the circuit.

AC27E–03

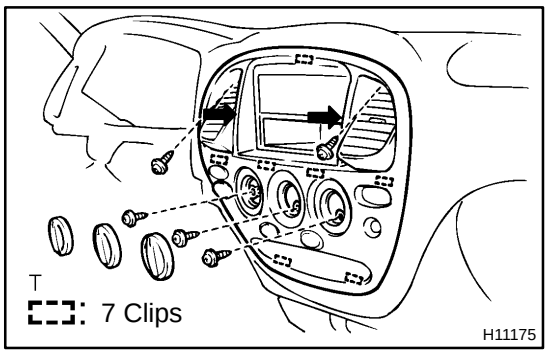

REMOVAL

REMOVE CENTER CLUSTER INTEGRATION PANEL

(a) Remove the 3 heater control knobs.
(b) Remove the 5 screws.
(c) Remove the integration control panel by pulling the portions indicated by arrows in the illustration.
(d) Disconnect the connector.

AC22G−08

CHARGING

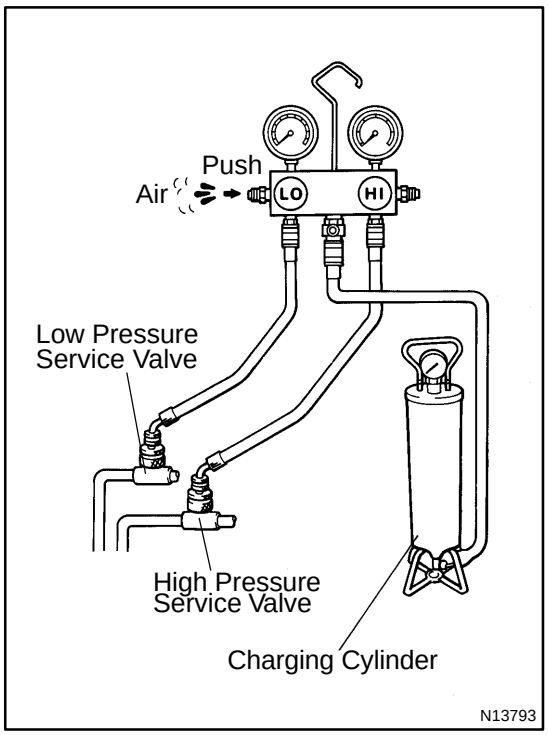

1. INSTALL CHARGING CYLINDER

HINT:

When handling the charging cylinder, always follow the directions given in the instruction manual.

(a) Charge the proper amount of refrigerant into the charging cylinder.

(b) Connect the center hose to the charging cylinder.

CAUTION:

Do not open either the high or low side valve of the manifold gauge set.

(c) Open the valve of the charging cylinder.

(d) Press the valve core on the side of the manifold gauge and expel the air from the center hose.

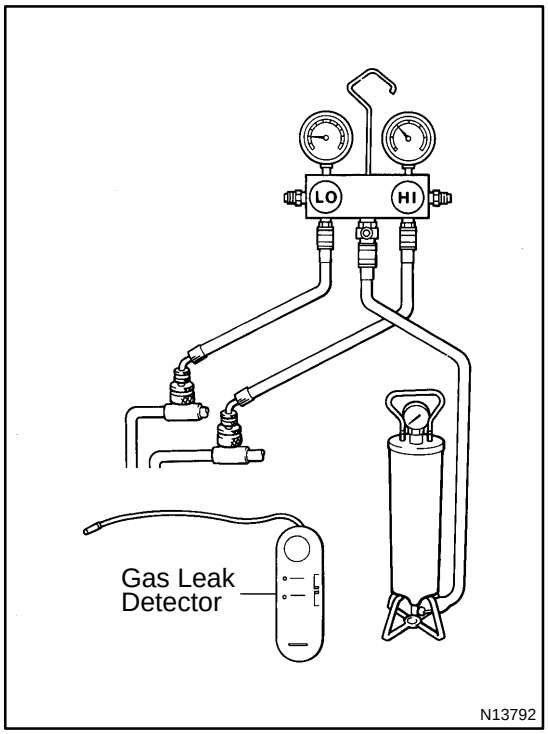

2. INSPECT REFRIGERATION SYSTEM FOR LEAKS

(a) Open the high pressure side valve and charge refrigerant.

(b) When the low pressure gauge indicates 98 kPa (1 kgf/cm^2, 14 psi), close the high pressure side valve.

(c) Using a gas leak detector, check the system for leakage.

CAUTION:

Use a refrigerant recovery/recycling machine to recover the refrigerant whenever replacing parts.

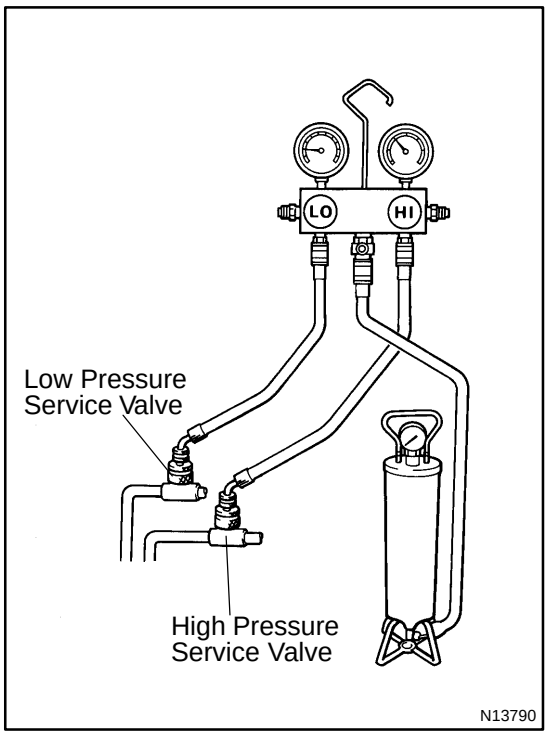

3. CHARGE REFRIGERANT INTO REFRIGERANT SYSTEM

If there is no leak after refrigerant leak check, charge the proper amount of refrigerant into the refrigeration system.

CAUTION:

- **Never run the engine when charging the system through the high pressure side.**
- **Do not open the low pressure side valve when the system is being charged with liquid refrigerant.**

(a) Open the high pressure side valve fully.

(b) Charge specified amount of refrigerant, then close the high pressure side valve.

HINT:

The system is fully charged if bubbles cannot be seen through the sight glass.

(c) Partially charge the refrigeration system with refrigerant.

(1) Prepare the vehicle:

- Running engine at 1,500 rpm
- Single A/C:
  Front blower speed control dial at ”HI” position
- Dual A/C:
  Front and rear blower speed set at ”HI” position
- Single A/C:
  Front temperature control dial at ”MAX. COOL” position
- Dual A/C:
  Front temperature control dial at ”MAX. COOL” position
  Rear temperature control set at 18.5˚C (65˚F)
- Air inlet control set at ”RECIRC”
- Fully open doors (Sliding roof: closed)

(2) Open the low pressure side valve.

CAUTION:

Do not open the high pressure side valve.

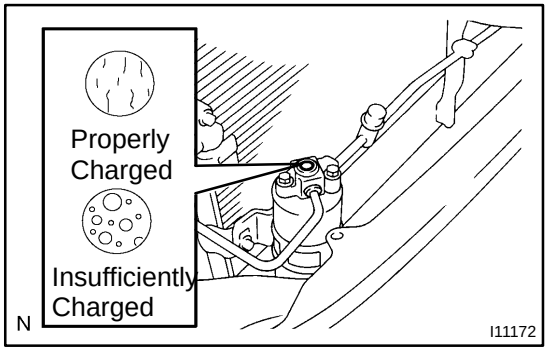

(d) Access cab, Standard cab:
Charge refrigerant until bubbles disappear and check the pressure on the gauge through the sight glass.

HINT:

Double cab models do not have a sight glass. When inspecting, use a manifold gauge set.

AC0C4−12

EVACUATING

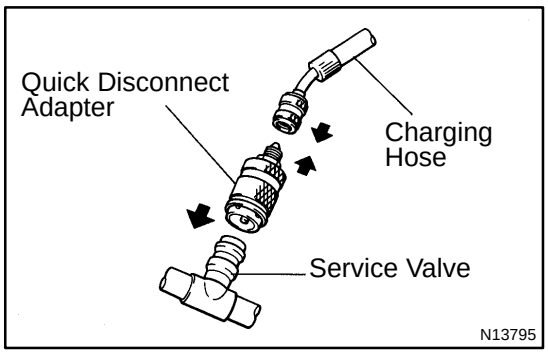

1. CONNECT QUICK DISCONNECT ADAPTER TO CHARGING HOSES

2. REMOVE CAPS FROM SERVICE VALVES ON REFRIGERANT LINES

3. SET MANIFOLD GAUGE SET

(a) Close both valves of the manifold gauge set.

(b) Connect the quick disconnect adapters to the service valves.

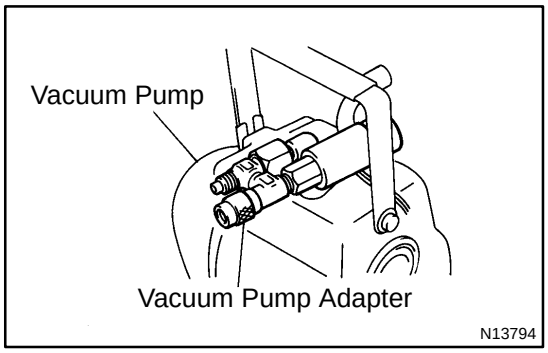

4. EVACUATE AIR FROM REFRIGERATION SYSTEM

(a) Connect the vacuum pump adapter to the vacuum pump.

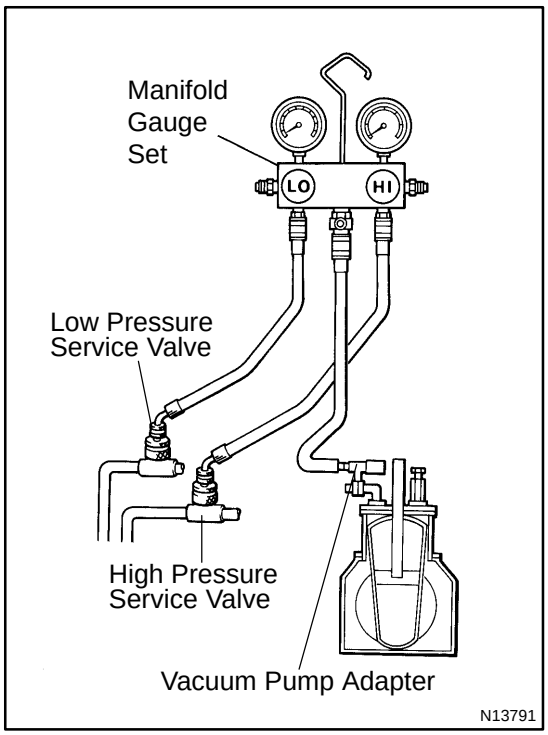

(b) Connect the center hose of the manifold gauge set to the vacuum pump adapter.

(c) Open both the high and low side valves and run the vacuum pump.

(d) After 10 minutes or more, check that the low pressure gauge indicates 750 mmHg (30 in. Hg) or more.

HINT:

If the reading is 750 mmHg (30 in. Hg) or more, close both valves of the manifold gauge set and stop the vacuum pump. Check the system for leaks and repair if necessary.

(e) Close both the high and low side valves and stop the vacuum pump.

(f) Leave the system in this condition for 5 minutes or more and check that there is no change in gauge indication.

AC3RP−02

LOCATION

Access Cab, Standard Cab:

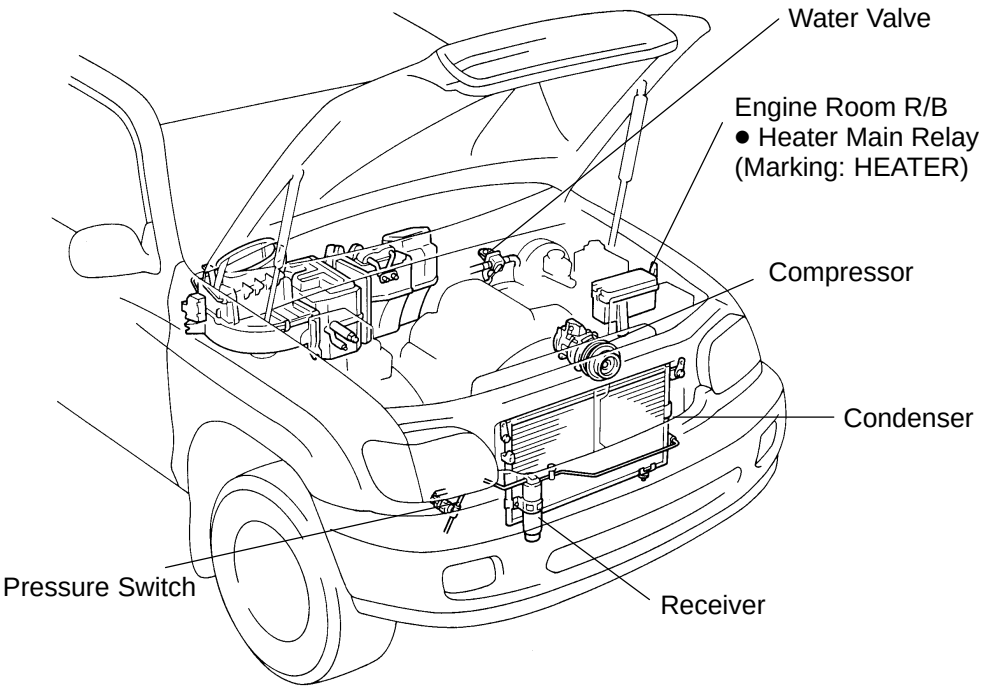

N

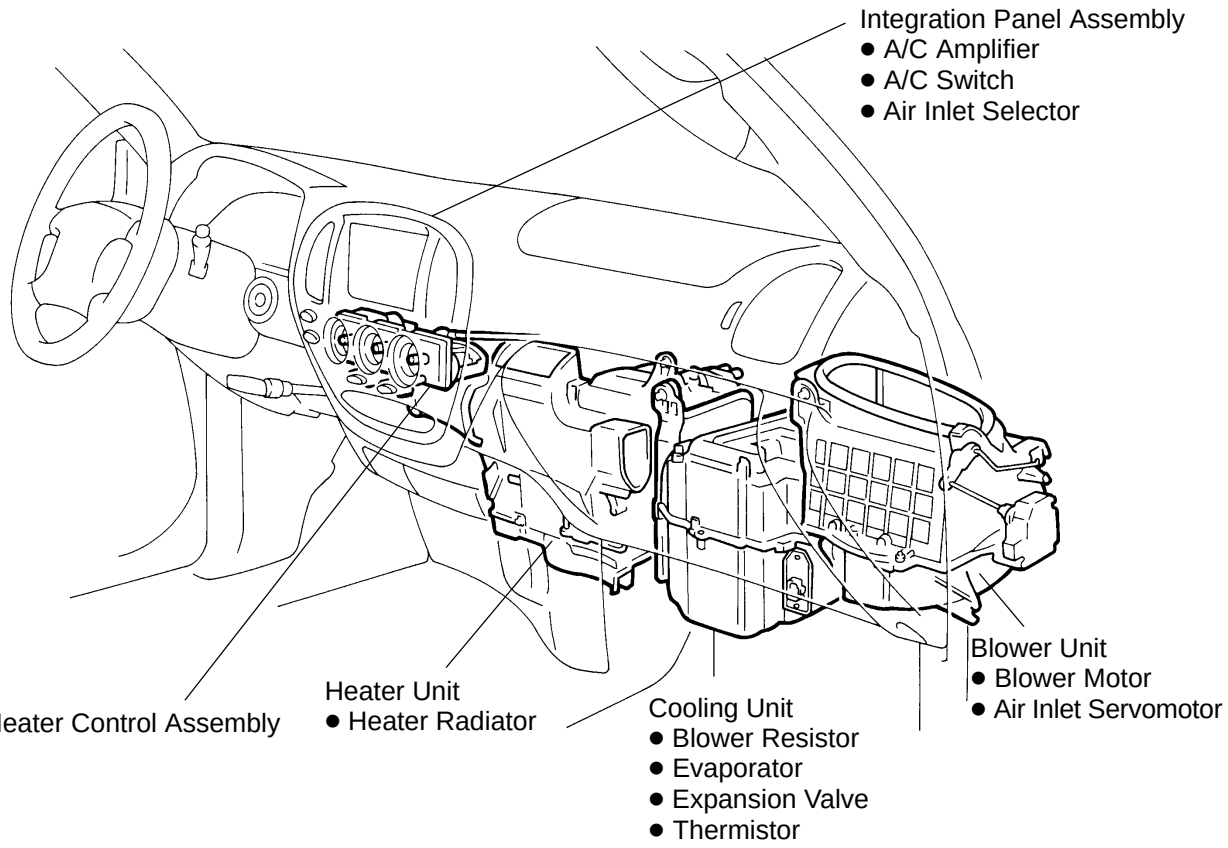

I11116
I11117

N

I29016

Double Cab:

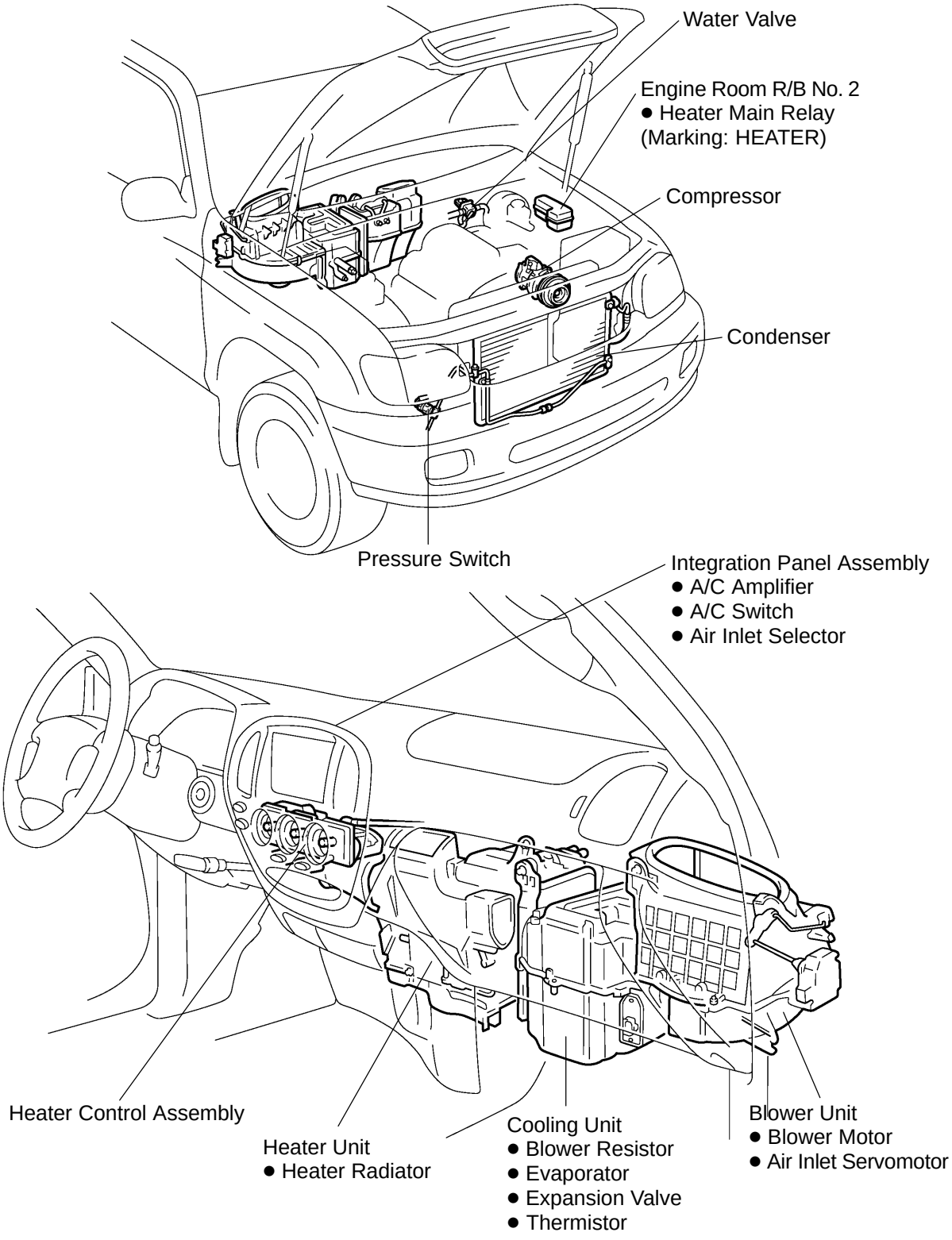

N

H23499

AC22F−09

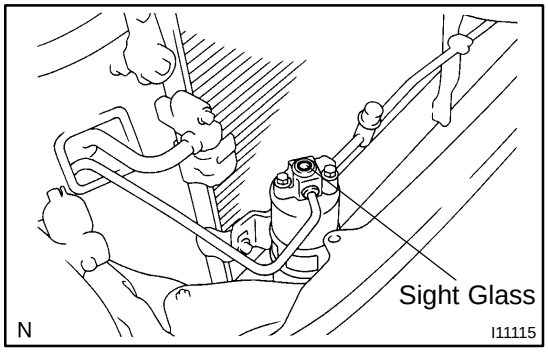

ON−VEHICLE INSPECTION

1. Access cab, Standard cab:
INSPECT REFRIGERANT VOLUME

Observe the sight glass on the liquid tube.

Test conditions:

- Running engine at 1,500 rpm
- Blower speed control switch at ”HI” position
- A/C switch ON
- Temperature control dial at ”COOL” position
- Fully open the doors

Item	Symptom	Amount of refrigerant	Remedy
1	Bubbles are present in sight glass	Insufficient*	(1) Check for gas leakage with gas leak detector and repair if necessary (2) Add refrigerant until bubbles disappear
2	No bubbles are present in sight glass	None, sufficient or too much	Refer to items 3 and 4
3	No temperature difference between compressor inlet and outlet	Empty or nearly empty	(1) Check for gas leakage with gas leak detector and repair if necessary (2) Add refrigerant until bubbles disappear
4	Temperature between compressor inlet and outlet is noticeably different	Correct or too much	Refer to items 5 and 6
5	Immediately after air conditioning is turned off, refrigerant in sight glass stays clear	Too much	(1) Discharge refrigerant (2) Evacuate air and charge proper amount of purified refrigerant
6	When air conditioning is turned off, refrigerant foams and then stays clear	Correct	−

*: Bubbles in the sight glass with ambient temperature higher than usual can be considered normal if cooling is sufficient.

HINT:

Double cab models do not have a sight glass. When inspecting, use a manifold gauge set.

2. INSPECT REFRIGERANT PRESSURE WITH MANIFOLD GAUGE SET

This is a method for checking the A/C system by using a manifold gauge set. Read the manifold gauge pressure when the following conditions are established.

Test conditions:

- Temperature at the air inlet with the switch set at RECURC is 30 to 35˚C (86 to 95˚F)
- Engine running at 1500 rpm
- Blower speed control switch at ”HI” position
- Temperature control dial at ”COOL” position

HINT:

Gauge indications may vary slightly due to ambient temperature conditions.

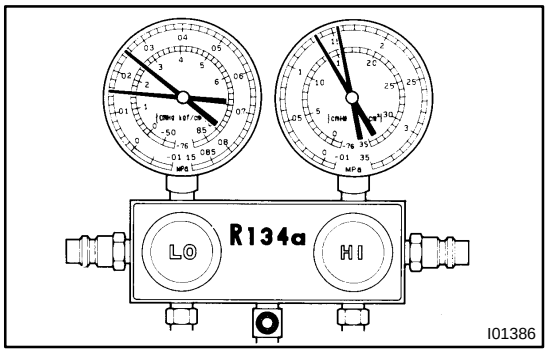

(1) Normally functioning refrigeration system.

Gauge reading:

Low pressure side:

0.15 to 0.25 MPa (1.5 to 2.5 kgf/cm^2)

High pressure side:

1.37 to 1.57 MPa (14 to 16 kgf/cm^2)

(2) Moisture present in refrigeration system.

Condition: Periodically cools and then fails to cool

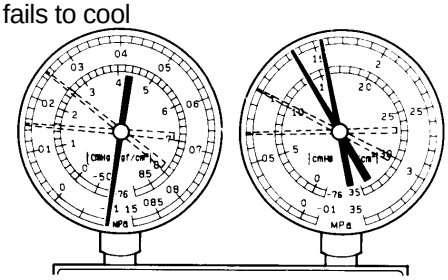

Symptom seen in refrigeration system	Probable cause	Diagnosis	Remedy
During operation, pressure on low pressure side cycles between vacuum and normal	Moisture in refrigeration system freezes at expansion valve orifice and temporarily stops cycle, but normal state is restored after the ice melts	• Drier in oversaturated state • Moisture in refrigeration system freezes at expansion valve orifice and blocks circulation of refrigerant	(1) Replace receiver (2) Remove moisture in cycle by repeatedly evacuating air (3) Charge proper amount of new refrigerant

(3) Insufficient cooling

Condition: Insufficient cooling

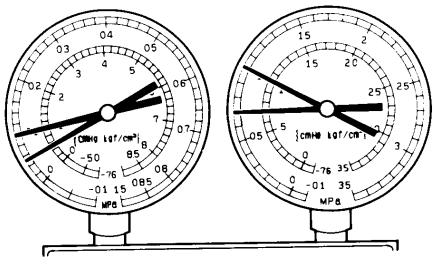

I01388

Symptom seen in refrigeration system	Probable cause	Diagnosis	Remedy
• Pressure low on both low and high pressure sides • Bubbles seen in sight glass continuously • Insufficient cooling performance	Gas leakage in refrigeration system	• Insufficient refrigerant in system • Refrigerant leaking	(1) Check for gas leakage with gas leak detector and repair if necessary (2) Charge proper amount of refrigerant (3) If indicated pressure value is near 0 when connected to gauge, create the vacuum after inspecting and repairing the location of the leak

(4) Poor circulation of refrigerant

Condition: Insufficient cooling

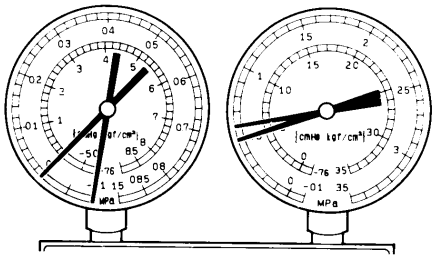

I01389

Symptom seen in refrigeration system	Probable cause	Diagnosis	Remedy
• Pressure low on both low and high pressure sides • Frost on tube from receiver to unit	Refrigerant flow obstructed by dirt in receiver	Receiver clogged	Replace receiver

(5) Refrigerant does not circulate

Condition: Does not cool (Cools from time to time in some cases)

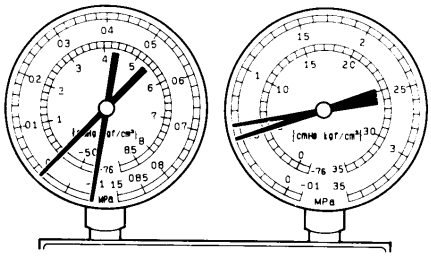

I01449

Symptom seen in refrigeration system	Probable cause	Diagnosis	Remedy
• Vacuum indicated on low pressure side, very low pressure indicated on high pressure side • Frost or dew seen on piping on both sides of receiver/drier or expansion valve	• Refrigerant flow obstructed by moisture or dirt in refrigeration system • Refrigerant flow obstructed by gas leakage from expansion valve	Refrigerant does not circulate	(1) Check expansion valve (2) Clean out dirt in expansion valve by blowing with air (3) Replace receiver (4) Evacuate air and charge new refrigerant to proper amount (5) For gas leakage from expansion valve, replace expansion valve

(6) Refrigerant overcharged or insufficient cooling of condenser

Condition: Insufficient cooling

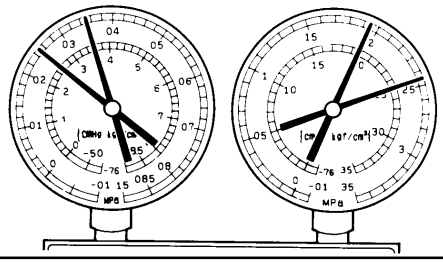

I01390

Symptom seen in refrigeration system	Probable cause	Diagnosis	Remedy
• Pressure too high on both low and high pressure sides • No air bubbles seen through the sight glass even when the engine rpm is lowered	• Unable to develop sufficient performance due to excessive refrigerant • Insufficient cooling of condenser	• Excessive refrigerant in cycle→refrigerant overcharged • Condenser cooling insufficient→condenser fins clogged or cooling fan faulty	(1) Clean condenser (2) Check cooling fan with fluid coupling operation (3) If (1) and (2) are in normal state, check amount of refrigerant and charge proper amount of refrigerant

(7) Air present in refrigeration system

Condition: Insufficient cooling

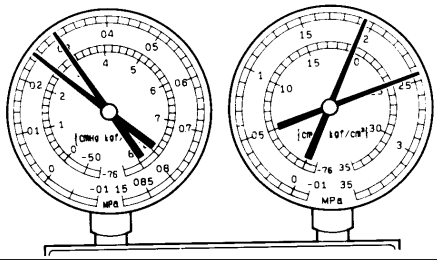

NOTE : These gauge indications are shown when the refrigeration system has been opened and the refrigerant has been charged without vacuum purging.

I01392

Symptom seen in refrigeration system	Probable cause	Diagnosis	Remedy
• Pressure too high on both low and high pressure sides • The low pressure piping hot to the touch • Bubbles seen in sight glass	Air in refrigeration system	• Air present in refrigeration system • Insufficient vacuum purging	(1) Check compressor oil to see if it is dirty or insufficient (2) Evacuate air and charge new refrigerant

(8) Expansion valve malfunction

Condition: Insufficient cooling

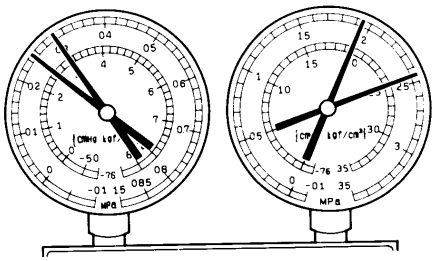

I01450

Symptom seen in refrigeration system	Probable cause	Diagnosis	Remedy
• Pressure too high on both low and high pressure sides • Frost or large amount of dew on piping on low pressure side	Trouble in expansion valve	• Excessive refrigerant in low pressure piping • Expansion valve opened too wide	Check expansion valve Replace if defective

(9) Insufficient compressor compression

Condition : Does not cool

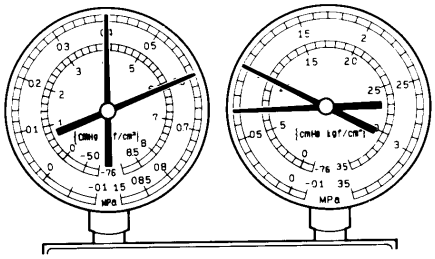

I01393

Symptom seen in refrigeration system	Probable cause	Diagnosis	Remedy
• Pressure too high on both low and high pressure sides • Pressure too low on high pressure side	Internal leak in compressor	• Low compression • Leak from valve or broken sliding parts	Repair or replace compressor

3. INSPECT IDLE−UP SPEED

(a) Warm up the engine.

(b) Inspect idle−up speed when the following conditions are established.

- Warm up engine
- Blower speed control switch at ”HI” position
- A/C switch ON
- Temperature control dial at ”COOL” position

Magnetic clutch condition	Idle−up speed
1GR−FE Engine	−
Magnetic clutch not engaged	700 ± 50 rpm
Magnetic clutch engaged	700 ± 50 rpm
2UZ−FE Engine	−
Magnetic clutch not engaged	750 ± 50 rpm
Magnetic clutch engaged	800 ± 50 rpm

If idle speed is not as specified, check the Idle control system.

4. INSPECT FOR LEAKAGE OF REFRIGERANT

(a) Perform under the following conditions:

- Stop the engine.
- Secure good ventilation (If not, the gas leak detector may react to volatile gases witch are not refrigerant, such as evaporated gasoline and exhaust gas.)
- Repeat the test 2 or 3 times.
- Make sure that there is some refrigerant remaining in the refrigeration system.
  When the compressor is OFF: approx. 392 to 588 kPa (4 to 6 kgf/ cm^2, 57 to 85 psi)

(b) Bring the gas leak detector close to the drain hose before performing the test.

HINT:

- After the blower motor stopped, leave the cooling unit for more than 15 minutes.
- Bring the gas leak detector sensor under the drain hose.
- When bringing the gas leak detector close to the drain hose, make sure that the gas leak detector does not react to the volatile gases.

If such reaction is unavoidable, the vehicle must be lifted up.

(c) If gas leak is not detected on the drain hose, remove the blower motor linear controller from the cooling unit. Then insert the gas leak detector sensor into the unit and perform the test.

(d) Disconnect the connector and leave the pressure switch for approx. 20 minutes. Then bring the gas leak detector close to the pressure switch and perform the test.

(e) Bring the gas leak detector close to the refrigerant lines and perform the test.

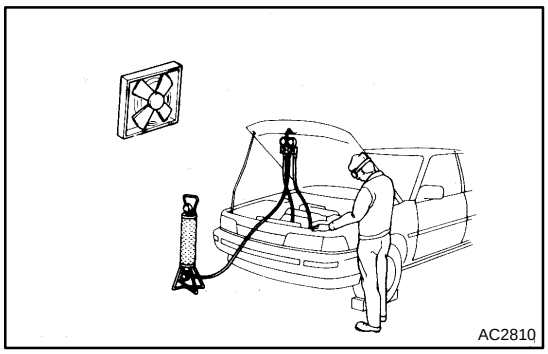
AC2810

AIR CONDITIONING SYSTEM

AC0C1−14

PRECAUTION

1. DO NOT HANDLE REFRIGERANT IN AN ENCLOSED AREA OR NEAR AN OPEN FLAME

2. ALWAYS WEAR EYE PROTECTION

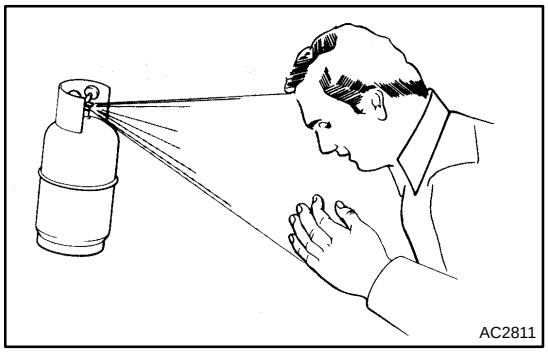
AC2811

3. BE CAREFUL NOT TO GET LIQUID REFRIGERANT IN YOUR EYES OR ON YOUR SKIN

If liquid refrigerant gets in your eyes or on your skin.

(a) Wash the area with lots of cool water.

CAUTION:

Do not rub your eyes or skin.

(b) Apply clean petroleum jelly to the skin.

(c) Go immediately to a physician or hospital for professional treatment.

4. NEVER HEAT CONTAINER OR EXPOSE IT TO OPEN FLAME

5. BE CAREFUL NOT TO DROP CONTAINER OR NOT TO APPLY PHYSICAL SHOCKS TO IT

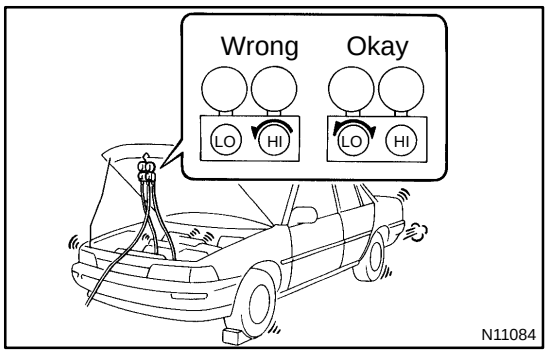

N11084

6. DO NOT OPERATE COMPRESSOR WITHOUT ENOUGH REFRIGERANT IN REFRIGERATION SYSTEM

If there is not enough refrigerant in the refrigerant system, oil lubrication will be insufficient and compressor burnout may occur. Necessary care should be taken to avoid this.

7. DO NOT OPEN PRESSURE MANIFOLD VALVE WHILE COMPRESSOR IS OPERATING

If the high pressure valve is opened, refrigerant flows in the reverse direction and could cause the charging cylinder to rupture, so open and close only the low pressure valve.

8. BE CAREFUL NOT TO OVERCHARGE SYSTEM WITH REFRIGERANT

If refrigerant is overcharged, it causes problems such as insufficient cooling, poor fuel economy, engine overheating, etc.

9. SUPPLEMENTAL RESTRAINT SYSTEM (SRS)

The TOYOTA TUNDRA is equipped with an SRS (Supplemental Restraint System) such as the driver and front passenger airbags. Failure to carry out service operation in the correct sequence could cause the SRS to unexpectedly deploy during servicing, possibly leading to a serious accident. Before servicing (including removal or installation of parts, inspection or replacement), be sure to read the precautionary notices in the RS section.

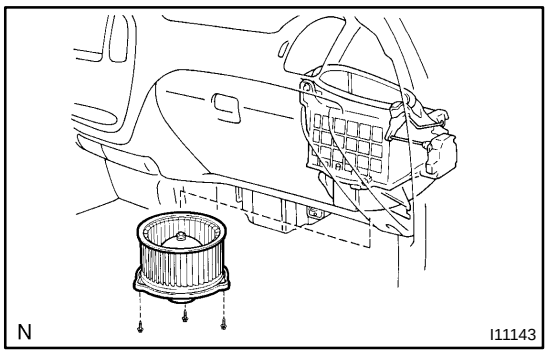

BLOWER MOTOR

AC3RY−02

INSPECTION

1. REMOVE BLOWER MOTOR

(a) Double cab:
Remove the 2 screws and motor cover.
(b) Disconnect the connector.
(c) Remove the 3 screws and motor.

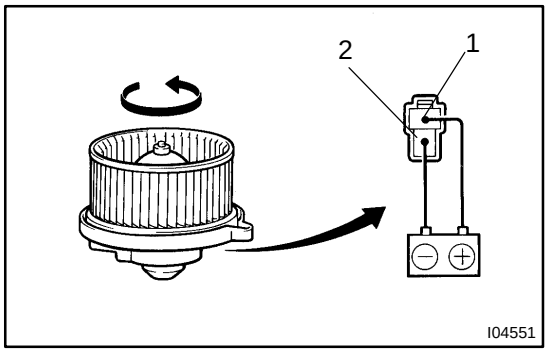

2. Standard cab, Access cab:
INSPECT BLOWER MOTOR OPERATION

Connect the positive (+) lead from the battery to terminal 1 and the negative (−) lead to terminal 2, then check that the motor operates smoothly.
If operation is not as specified, replace the blower motor.

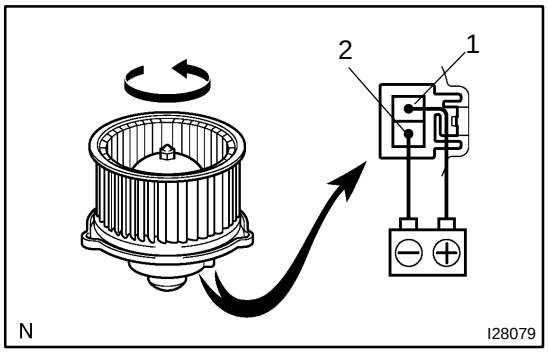

3. Double cab:
INSPECT BLOWER MOTOR OPERATION

Connect the positive (+) lead from the battery to terminal 1 and the negative (−) lead to terminal 2, then check that the motor operates smoothly.
If operation is not as specified, replace the blower motor.

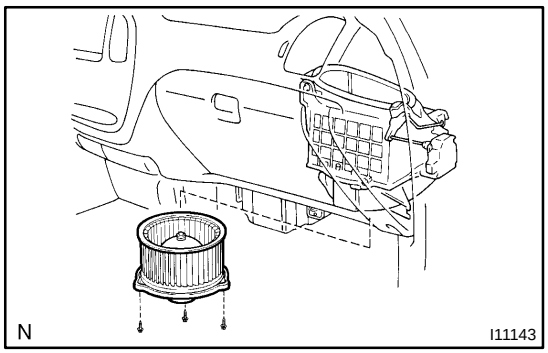

4. INSTALL BLOWER MOTOR

(a) Install the motor with the 3 screws.
(b) Connect the connector.

BLOWER RESISTOR

AC23E−05

INSPECTION

1. REMOVE GLOVE COMPARTMENT PARTS
2. REMOVE LOWER NO. 2 FINISH PANEL
3. REMOVE LOWER CENTER COVER
4. REMOVE LOWER LH FINISH PANEL
5. REMOVE LOWER COVER (See page BO−111)
6. REMOVE NO. 4 HEATER TO REGISTER DUCT

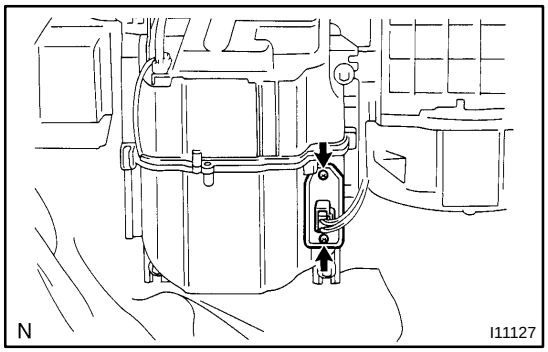

7. REMOVE BLOWER RESISTOR

(a) Disconnect the connector.

(b) Remove the 2 screws and blower resistor.

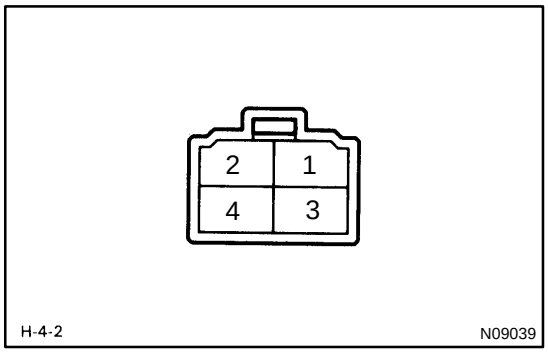

8. INSPECT BLOWER RESISTOR RESISTANCE

Tester connection	Condition	Specified condition
1−4	Constant	3.3 ± 0.2 Ω
1−3	Constant	1.9 ± 0.1 Ω
1−2	Constant	2.9 ± 0.2 Ω

If resistance is not as specified, replace the blower resistor.

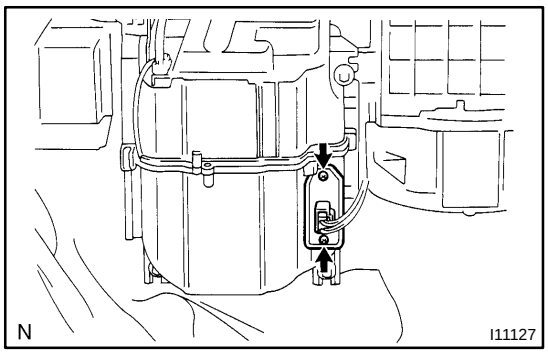

9. INSTALL BLOWER RESISTOR

(a) Install the blower resistor with the 2 screws.

(b) Connect the connector.

10. INSTALL NO. 4 HEATER TO REGISTER DUCT
11. INSTALL LOWER COVER
12. INSTALL LOWER LH FINISH PANEL
13. INSTALL LOWER CENTER COVER
14. INSTALL LOWER NO. 2 FINISH PANEL
15. INSTALL GLOVE COMPARTMENT PARTS
    (See page BO−120)

BLOWER UNIT

COMPONENTS

AC3RW−02

Access Cab, Standard Cab:

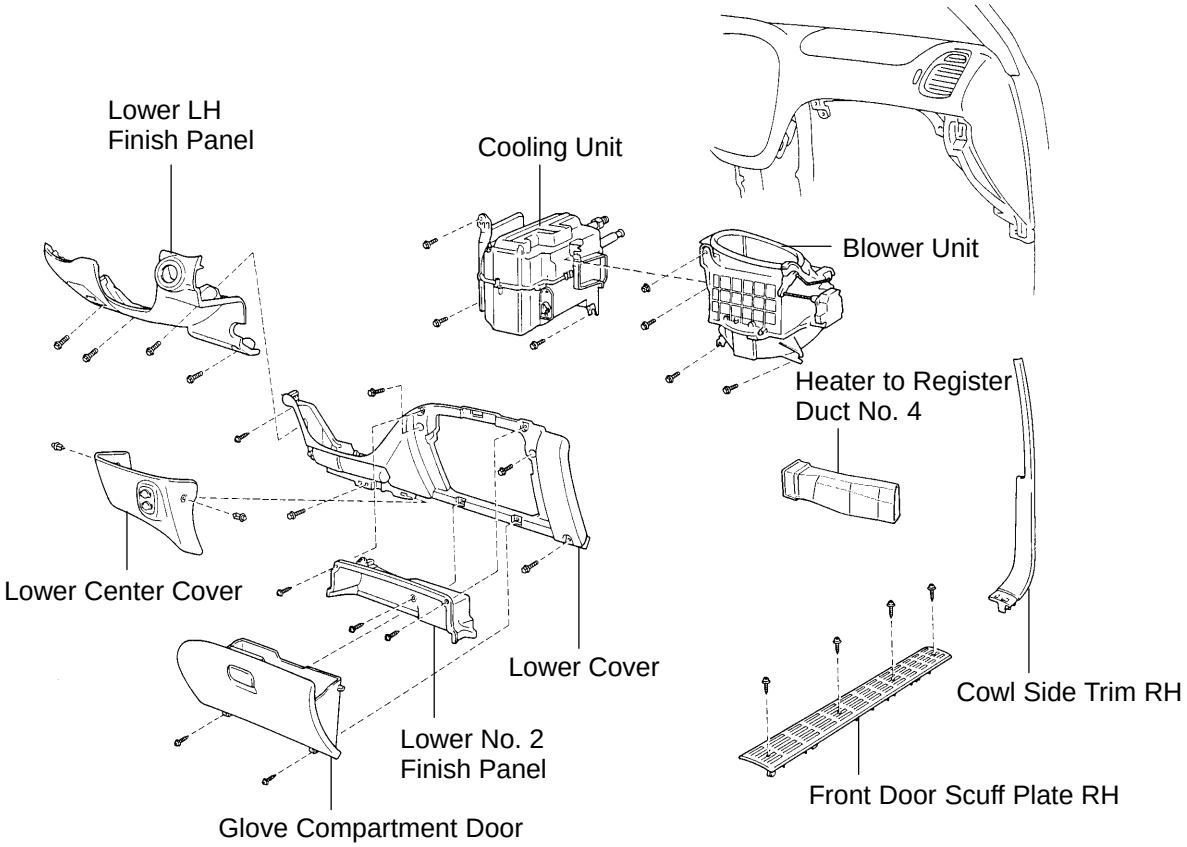

N

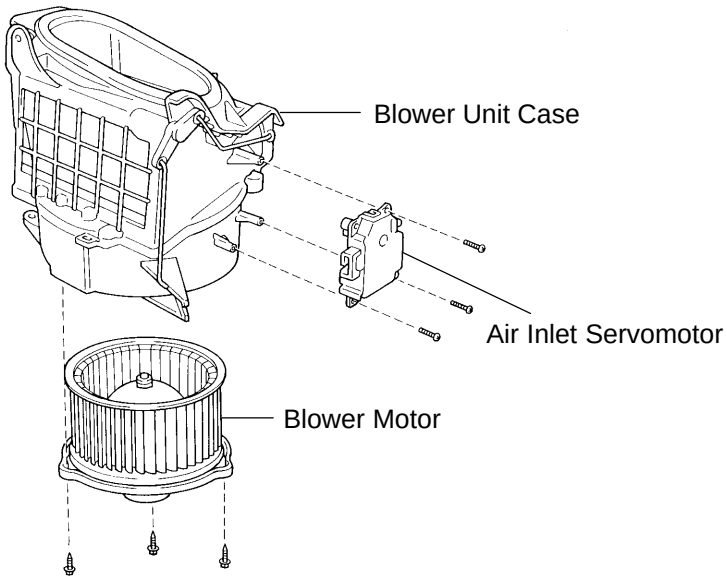

I11157
I11132

N

I11178

Double Cab:

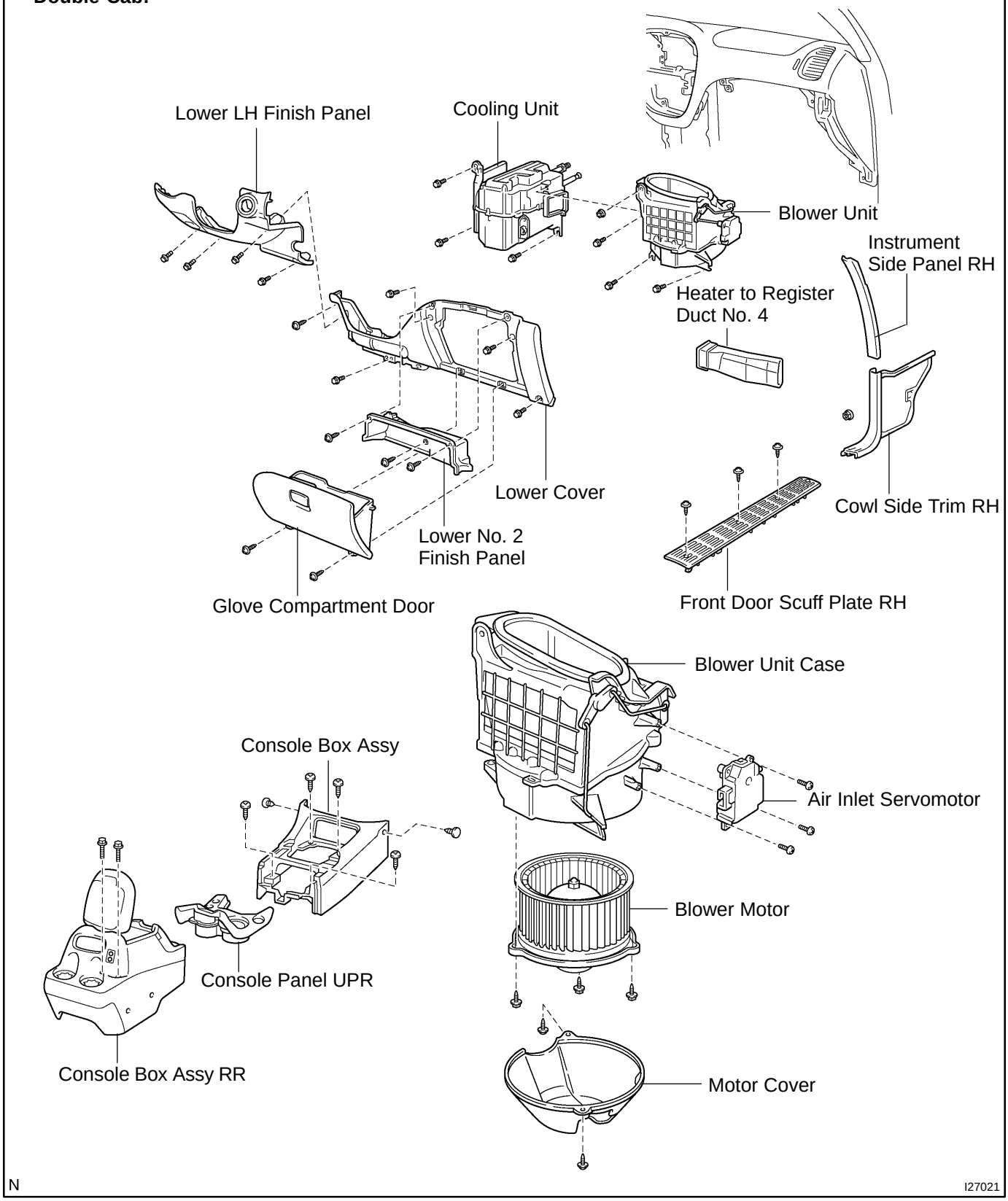
Lower LH Finish Panel
Cooling Unit
Blower Unit
Instrument Side Panel RH
Heater to Register Duct No. 4
Lower Cover
Lower No. 2 Finish Panel
Glove Compartment Door
Cowl Side Trim RH
Front Door Scuff Plate RH
Blower Unit Case
Console Box Assy
Air Inlet Servomotor
Blower Motor
Console Panel UPR
Console Box Assy RR
Motor Cover
N
I27021

AC0CW−05

DISASSEMBLY

1. REMOVE BLOWER MOTOR

(a) Double cab:
Remove the 2 screws and motor cover.

(b) Remove the 3 screws and blower motor.

2. REMOVE AIR INLET SERVOMOTOR

Remove the 3 screws and servomotor.

AC274−03

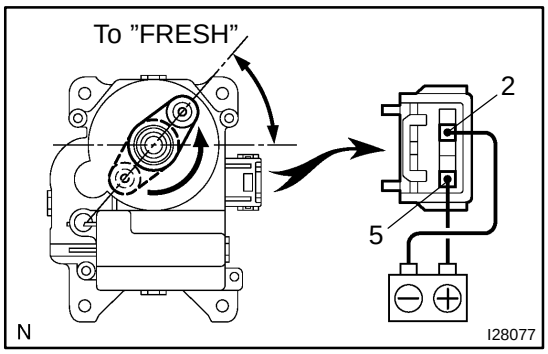

INSPECTION

INSPECT AIR INLET SERVOMOTOR OPERATION

(a) Connect the positive (+) lead from the battery to terminal 5 and the negative (−) lead to terminal 2.

(b) Check the motor arm rotates counterclockwise and stops in the ”FRESH” position.

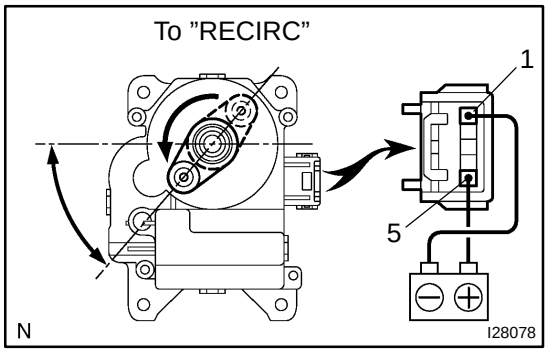

(c) Connect the positive (+) lead from the battery to terminal 5 and the negative (−) lead to terminal 1.

(d) Check the motor arm rotates counterclockwise and stops in the ”RECIRC” position.

AC0CX−02

INSTALLATION

The installation procedures are the removal procedures in reverse order (see page AC−47).

AC0CY−03

REASSEMBLY

The reassembly procedures are the disassembly procedures in reverse order (see page AC−48).

AC0CV−05

REMOVAL

1. REMOVE COOLING UNIT (See page AC−31)

2. REMOVE BLOWER UNIT

(a) Double cab:
Remove the 2 screws and motor cover.

(b) Disconnect the connector from the blower motor.

(c) Disconnect the air inlet damper control cable from the blower unit.

HINT:

At the time of installation, refer to the following:

After connection, adjust the control cable.

(d) Remove the nut, bolt and blower unit.

AC3SE−01

COMPONENTS

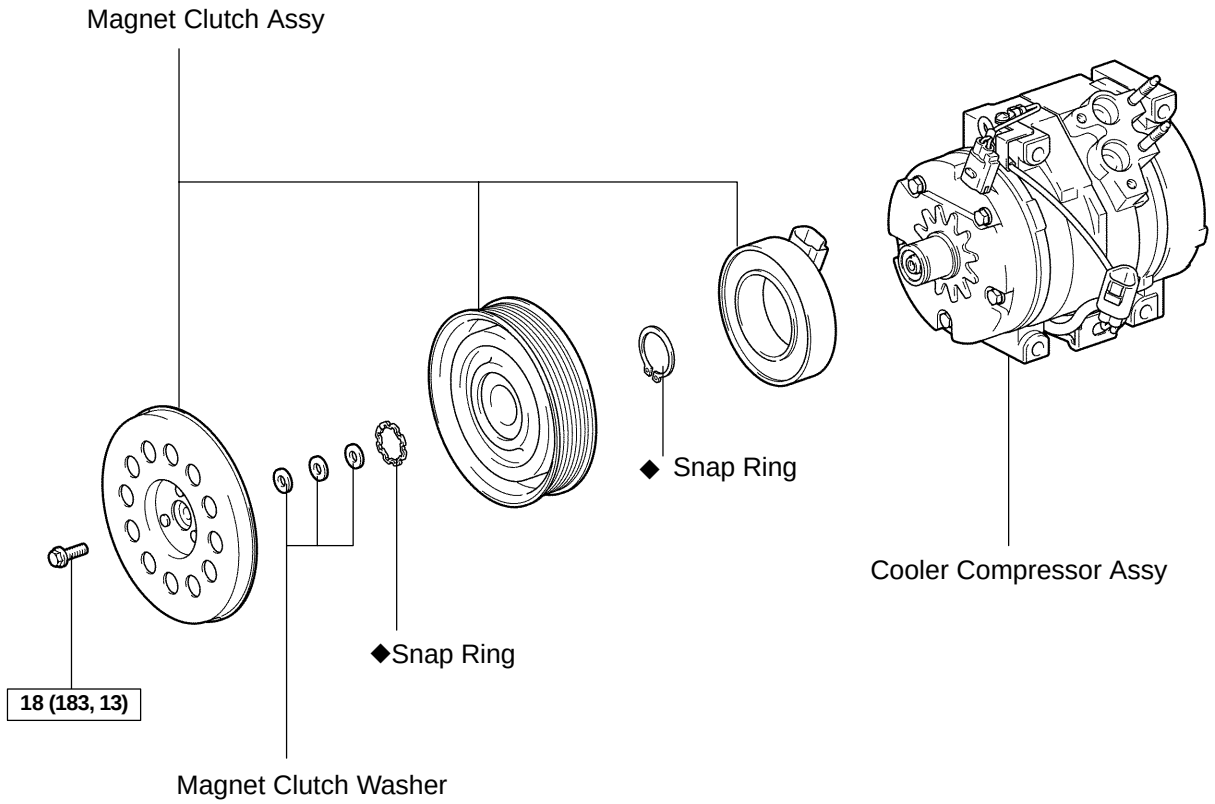

N·m (kgf·cm, ft·lbf) : Specified torque
◆Non−reusable part

I28952

AC3SG−01

DISASSEMBLY

1. REMOVE MAGNET CLUTCH

(a) Place the compressor and magnetic clutch in a vise.

(b) Using SST, remove the bolt, the magnet clutch hub and the magnet clutch washer.
SST 09960−10010 (09962−01000, 09963−00500)

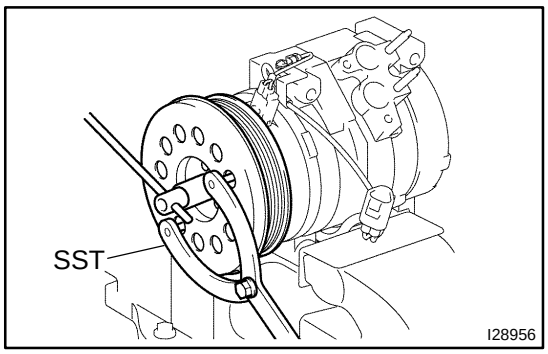

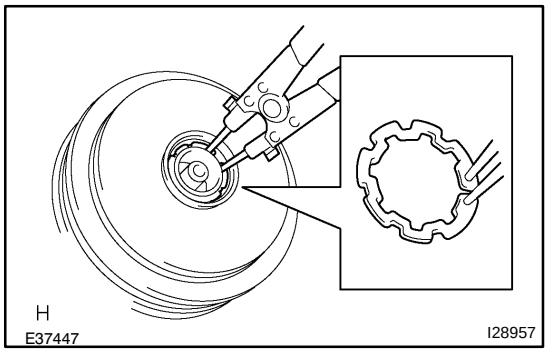

(c) Using a snap ring expander, remove the snap ring and the magnet clutch rotor.

(d) Remove the screw and disconnect the connector.

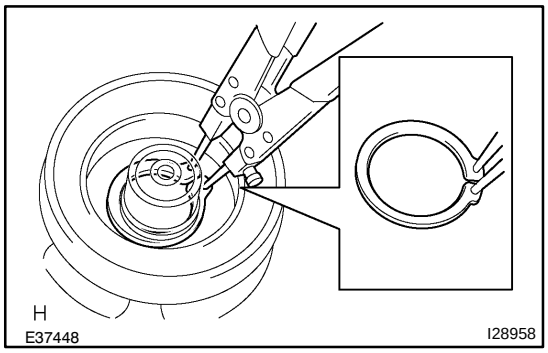

(e) Using a snap ring expander, remove the snap ring and the magnet clutch stator.

AC3SI−01

INSTALLATION

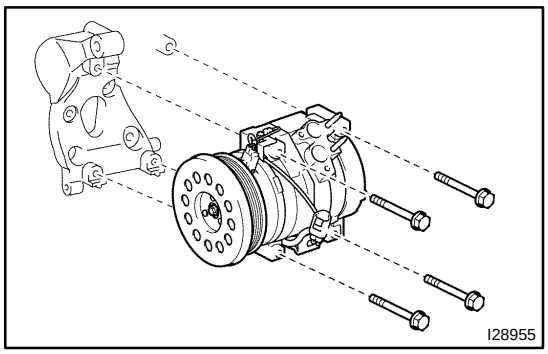

1. INSTALL COMPRESSOR AND MAGNET CLUTCH

(a) Install the compressor and the magnetic clutch with the 4 bolts.
Torque: 24 N·m (245 kgf·cm, 18 ft·lbf)

(b) Connect the connector.

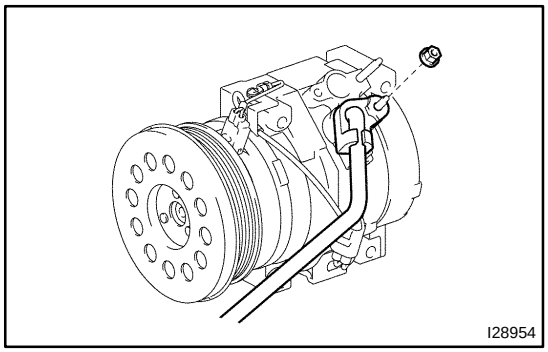

2. INSTALL SUCTION HOSE

(a) Remove the attached vinyl tape from the hose.

(b) Sufficiently apply compressor oil to a new O−ring and the fitting surfaces of the compressor and magnetic clutch.
Compressor oil: ND−OIL 8 or equivalent

(c) Install the O−ring on the suction hose sub−assy.

(d) Install the suction hose sub−assy on the compressor and magnetic clutch with the nut.
Torque: 10 N·m (100 kgf·cm, 7 in.·lbf)

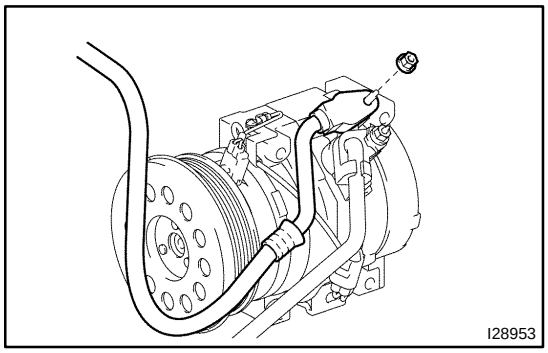

3. INSTALL DISCHARGE HOSE

(a) Remove the attached vinyl tape from the hose.

(b) Sufficiently apply compressor oil to a new O−ring and the fitting surfaces of the compressor and magnetic clutch.
Compressor oil: ND−OIL 8 or equivalent

(c) Install the O−ring on the discharge hose sub−assy.

(d) Install the discharge hose sub−assy on the compressor and magnetic clutch with the nut.
Torque: 10 N·m (100 kgf·cm, 7 in.·lbf)

4. INSTALL AND CHECK DRIVE BELT
(See page AC−19 and AC−17)

5. INSTALL ENGINE UNDER COVER

6. CONNECT NEGATIVE (−) TERMINAL CABLE TO BATTERY

7. EVACUATE AIR FROM REFRIGERATION SYSTEM

8. CHARGE SYSTEM WITH REFRIGERANT
Specified amount:
Access cab, Standard cab:
600 ± 50 g (21.16 ± 1.76 oz.)
Double cab:
530 ± 50 g (18.69 ± 1.76 oz.)

9. INSPECT FOR LEAKAGE OF REFRIGERANT

Using a gas leak detector, check for leakage of refrigerant.
If there is leakage, check the tightening torque at the joints.

COMPRESSOR AND MAGNETIC CLUTCH (1GR−FE)

AC3SD−01

ON−VEHICLE INSPECTION

1. SET MANIFOLD GAUGE SET (See page AC−20)

2. START ENGINE

3. INSPECT COMPRESSOR FOR METALLIC SOUND

Check if a metallic sound can be heard from the compressor when the A/C switch is on.

If a metallic sound cannot be heard, replace the compressor assembly.

4. INSPECT REFRIGERANT PRESSURE (See page AC−3)

5. STOP ENGINE

6. INSPECT VISUALLY FOR LEAKAGE OF REFRIGERANT FROM SAFETY SEAL

Using a gas leak detector, check for leakage of refrigerant.

If there is any leakage, replace the compressor assembly.

7. REMOVE MANIFOLD GAUGE SET (See page AC−22)

8. CHECK FOR LEAKAGE OF GREASE FROM CLUTCH BEARING

9. CHECK FOR SIGNS OF OIL ON PRESSURE PLATE

If necessary, repair or replace the pressure plate.

10. INSPECT MAGNETIC CLUTCH BEARING FOR NOISE

(a) Start the engine.

(b) Check if abnormal noise is heard from near the compressor when the A/C switch is OFF.

If abnormal noise is being emitted, replace the magnetic clutch.

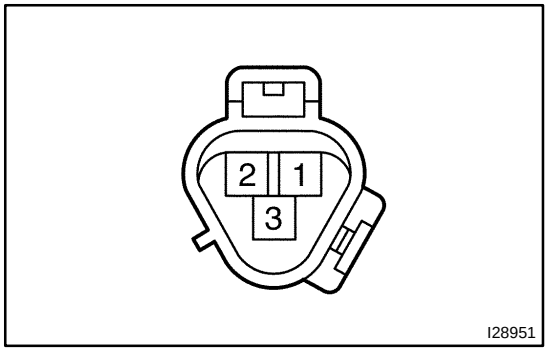

11. INSPECT MAGNETIC CLUTCH OPERATION

(a) Disconnect the connector.

(b) Connect the positive (+) lead from the battery to terminal 3 on the magnetic clutch connector and the negative (−) lead to body ground.

(c) Check that the magnetic clutch is energized.

If operation is not as specified, replace the magnetic clutch.

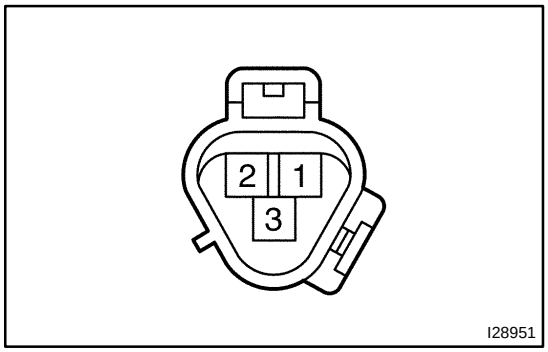

12. INSPECT COMPRESSOR LOCK SENSOR RESISTANCE

(a) Disconnect the connector.

(b) Measure the resistance between terminals 1 and 2.

Standard resistance:

165 to 205 Ω at 20°C (68°F)

If resistance is not as specified, replace the compressor.

AC3SH−01

REASSEMBLY

1. INSTALL MAGNET CLUTCH

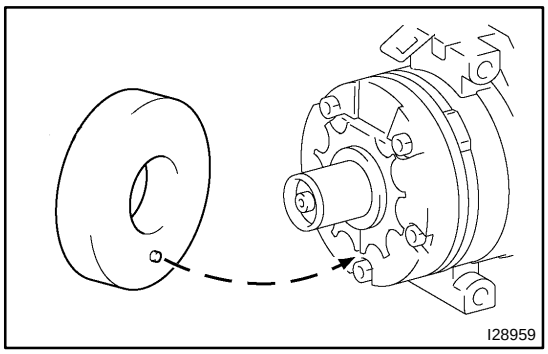

(a) Fit the parts as shown in the illustration, and install the magnet clutch stator.

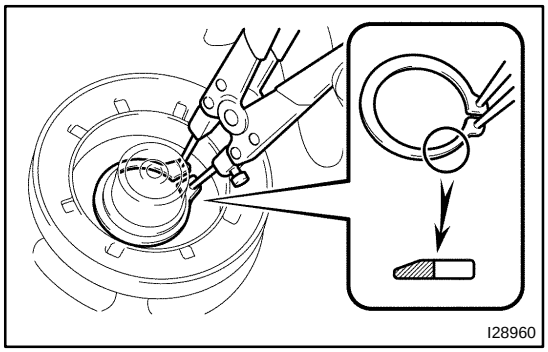

(b) Using a snap ring expander, install a new snap ring with the chamfered side facing up.

(c) Install the screw and connect the connector.

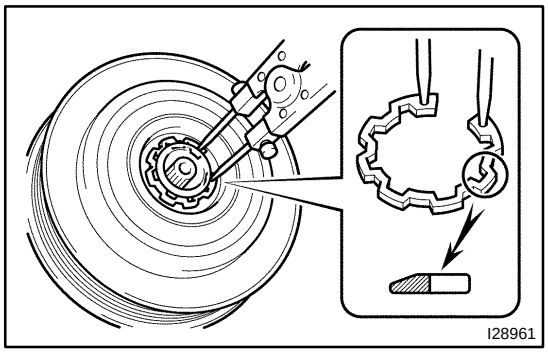

(d) Using a snap ring expander, install the magnet clutch rotor and a new snap ring with the chamfered side facing up.

(e) Install the magnet clutch washer and the magnet clutch hub.

NOTICE:

Do not change the combination of the magnet clutch washers used before disassembly.

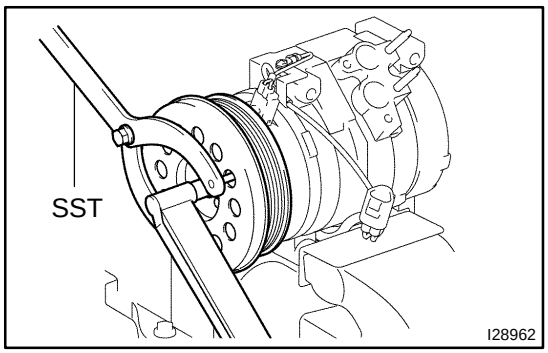

(f) Using SST, install the magnet clutch hub and the magnet clutch washer with the bolt.

SST 09960−10010 (09962−01000, 09963−00500)

Torque: 18 N·m (183 kgf·cm, 13 ft·lbf)

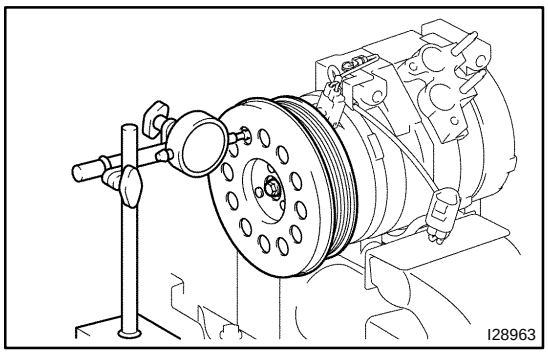

2. INSPECT MAGNET CLUTCH CLEARANCE

(a) Set the dial indicator to the magnet clutch hub.

(b) Connect the positive battery lead to terminal 1 of the magnet clutch connector and the negative lead to the earth wire. Turn the magnet clutch on and off and measure the clearance.

Standard clearance:
0.35 to 0.60 mm (0.013 to 0.023 in.)

If the measured value is not within the standard range, remove the magnet clutch hub and adjust it with magnet clutch washers.

NOTICE:

Adjustment should be performed with 3 or less magnet clutch washers.

3. INSPECT COMPRESSOR OIL

When replacing the compressor and magnetic clutch with a new one, after gradually removing the refrigerant gas from the service valve, drain the following amount of oil from the new compressor and magnetic clutch before installation.

Standard:
(Oil capacity inside the new compressor and magnetic clutch: 120 + 15 cc (4.0 + 0.5 fl. oz.)) − (Remaining oil amount in the removed compressor and magnetic clutch) = (Oil amount to be removed when replacing)

NOTICE:

- **When checking the compressor oil level, observe the precautions in the cooler removal/installation.**
- **Because compressor oil remains in the pipes of the vehicle, if a new compressor and magnetic clutch is installed without removing some oil inside, the oil amount becomes excessive, preventing heat exchange in the refrigerant cycle and causing refrigerant failure.**
- **If the remaining oil in the removed compressor and magnetic clutch is too small in volume, check for an oil leakage.**
- **Be sure to use ND−OIL 8 or equivalent for compressor oil.**

AC3SF−01

REMOVAL

1. RUN ENGINE AT IDLE SPEED WITH A/C ON FOR APPROX. 10 MINUTES

2. STOP ENGINE

3. DISCONNECT NEGATIVE (−) TERMINAL CABLE FROM BATTERY

4. DISCHARGE REFRIGERANT FROM REFRIGERATION SYSTEM

5. REMOVE ENGINE UNDER COVER

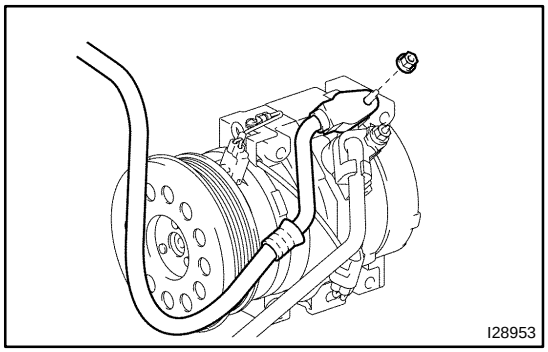

6. DISCONNECT DISCHARGE HOSE

(a) Remove the nut and disconnect the discharge hose sub−assy from the compressor and magnetic clutch.

(b) Remove the O−ring from the discharge hose sub−assy.

NOTICE:

Seal the openings of the disconnected parts using vinyl tape to prevent moisture and foreign matter from entering.

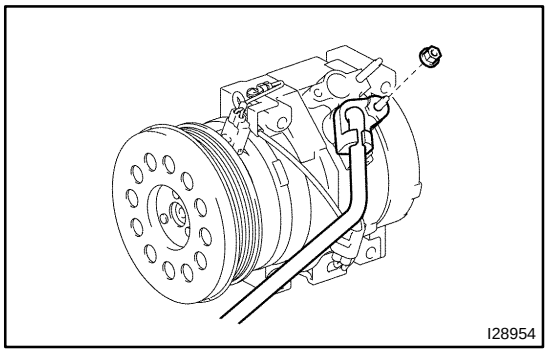

7. DISCONNECT SUCTION HOSE

(a) Remove the nut and disconnect the suction hose sub−assy from the compressor and magnetic clutch.

(b) Remove the O−ring from the suction hose sub−assy.

NOTICE:

Seal the openings of the disconnected parts using vinyl tape to prevent moisture and foreign matter from entering.

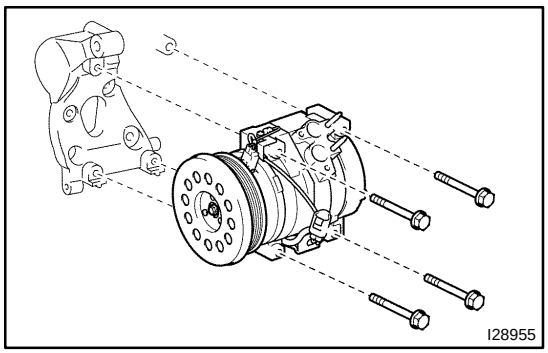

8. REMOVE COMPRESSOR AND MAGNETIC CLUTCH

(a) Disconnect the connector.

(b) Remove the 4 bolts and the compressor and magnetic clutch.

AC3SK−01

COMPONENTS

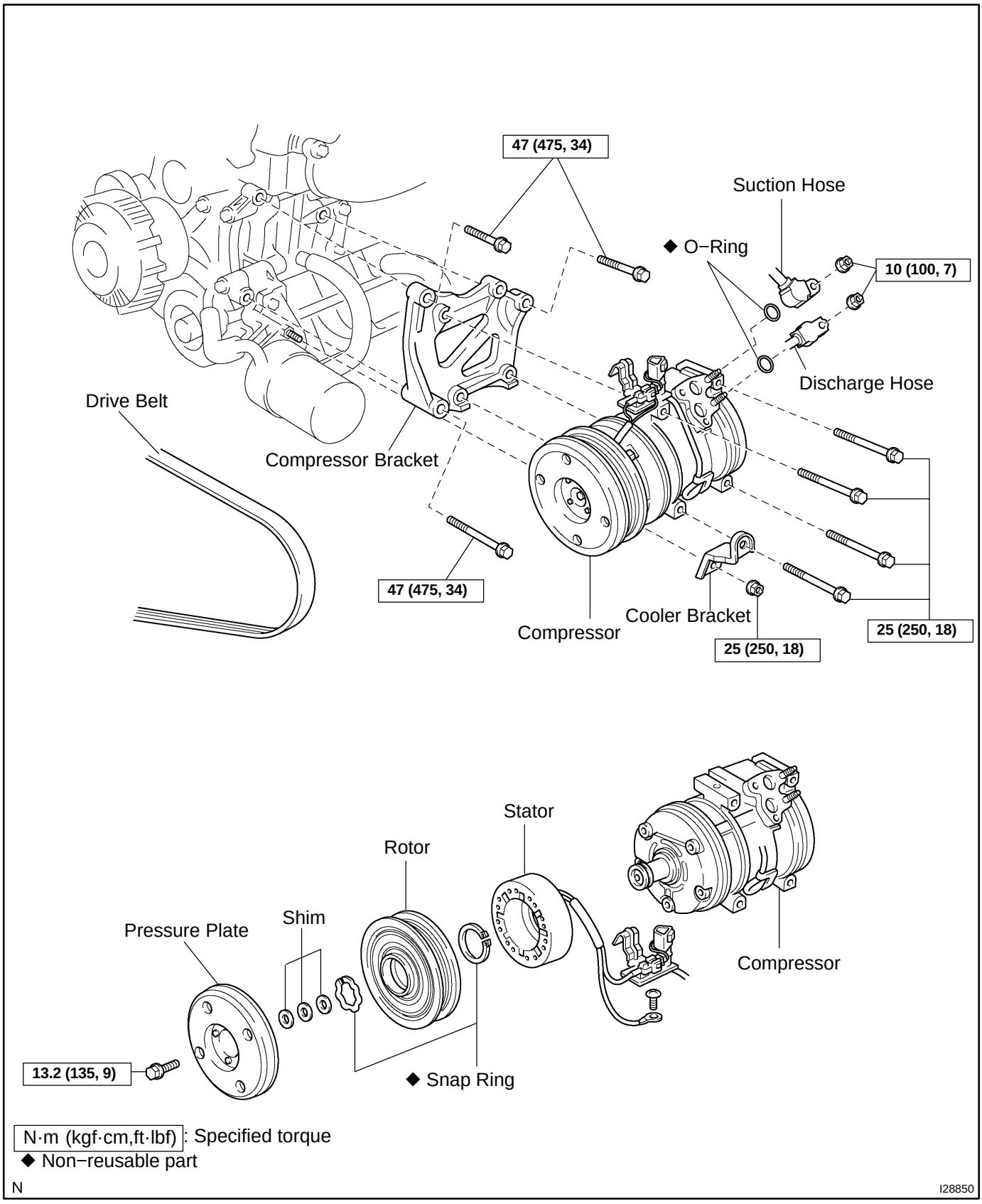

N·m (kgf·cm,ft·lbf): Specified torque

◆ Non−reusable part

N

I28850

AC3SM−01

DISASSEMBLY

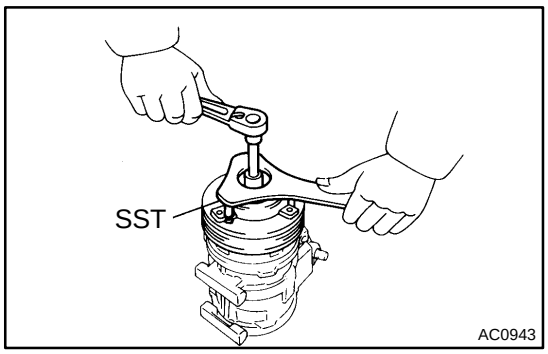

1. REMOVE PRESSURE PLATE

(a) Using SST and a socket wrench, remove the shaft bolt.
SST 07112−76060
Torque: 13.2 N·m (135 kgf·cm, 9 ft·lbf)

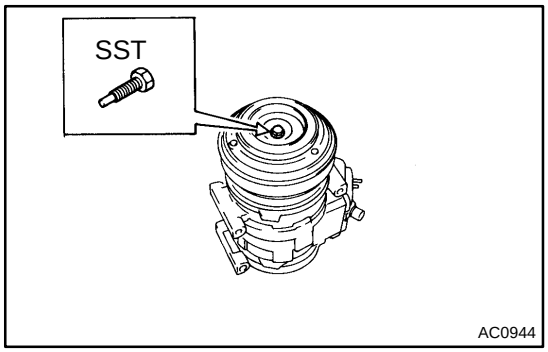

(b) Install SST on the pressure plate.
SST 07112−66040

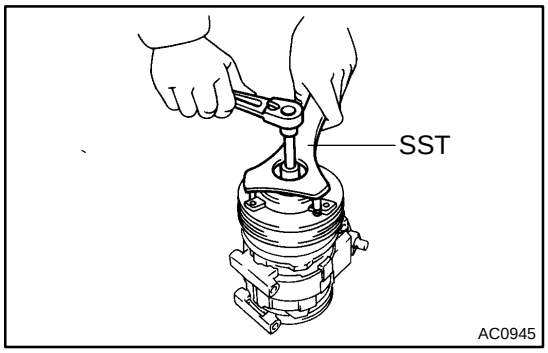

(c) Using SST and a socket wrench, remove the pressure plate.
SST 07112−66040, 07112−76060,

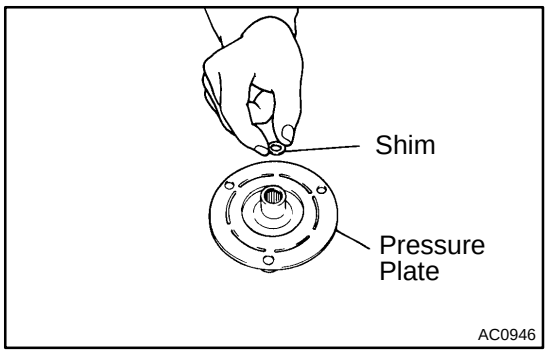

(d) Remove the shims from the pressure plate.

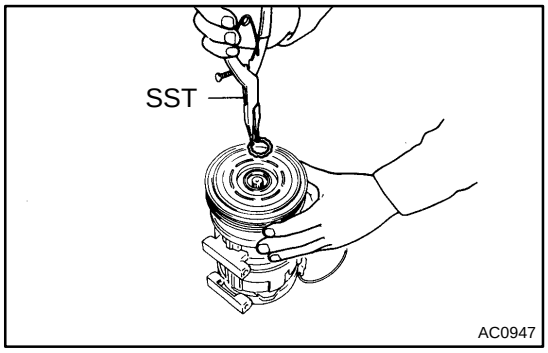

2. REMOVE ROTOR

(a) Using SST, remove the snap ring.
SST 95994−10020

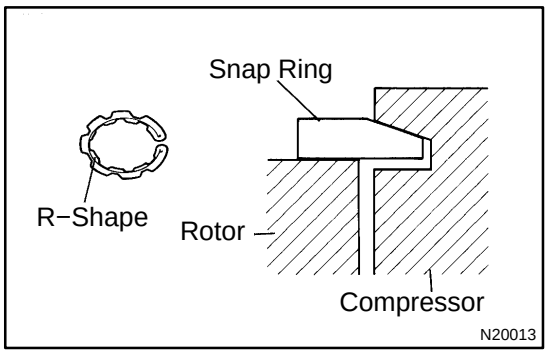

NOTICE:
The snap ring should be installed so that its beveled side faces up.

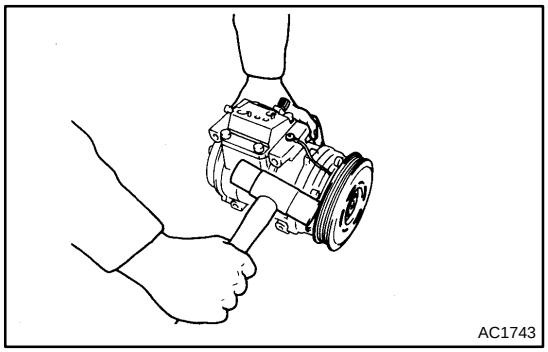

(b) Using a plastic hammer, remove the rotor from the shaft.

NOTICE:
Be careful not to damage the pulley when tapping on the rotor.

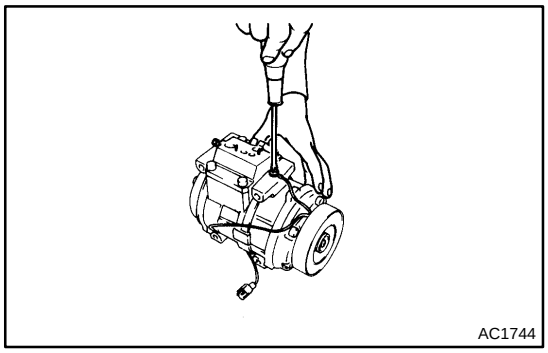

3. REMOVE STATOR

(a) Disconnect the stator lead wire from the compressor housing.

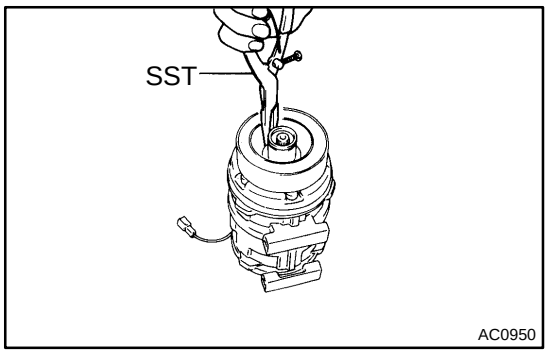

(b) Using SST, remove the snap ring.
SST 95994−10020

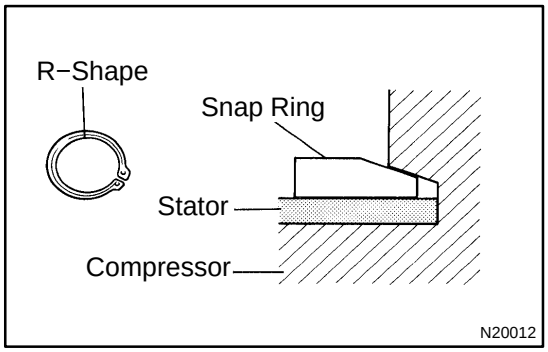

NOTICE:
The snap ring should be installed so that its beveled side faces up.

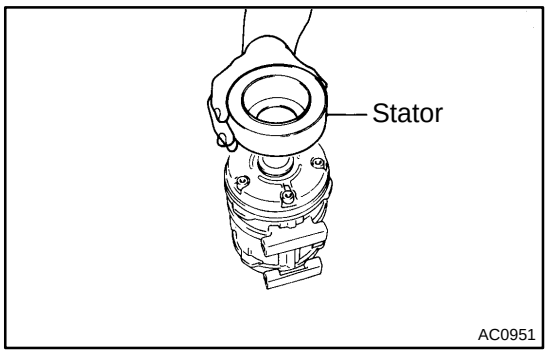

(c) Remove the stator.

AC3SO−01

INSTALLATION

1. INSTALL COMPRESSOR

(a) Install the compressor with the cooler bracket with the 4 bolts and nut.

Torque: 25 N·m (250 kgf·cm, 18 in.·lbf)

(b) Connect the connector.

2. CONNECT DISCHARGE AND SUCTION HOSES

Connect both hoses with the 2 nuts.

Torque: 10 N·m (100 kgf·cm, 7 in.·lbf)

NOTICE:

Hoses should be connected immediately after the caps have been removed.

HINT:

Lubricate 2 new O−rings with compressor oil and install them to the hoses.

3. INSTALL AND CHECK DRIVE BELT (See page AC−19 and AC−17)

4. CONNECT NEGATIVE (−) TERMINAL CABLE TO BATTERY

5. EVACUATE AIR FROM REFRIGERATION SYSTEM

6. CHARGE SYSTEM WITH REFRIGERANT

Specified amount:

Access cab, Standard cab: 600 ± 50 g (21.16 ± 1.76 oz.)

Double cab: 530 ± 50 g (18.69 ± 1.76 oz.)

7. INSPECT FOR LEAKAGE OF REFRIGERANT

Using a gas leak detector, check for leakage of refrigerant.

If there is leakage, check the tightening torque at the joints.

COMPRESSOR AND MAGNETIC CLUTCH (2UZ−FE)

AC3SJ−01

ON−VEHICLE INSPECTION

1. SET MANIFOLD GAUGE SET (See page AC−20)

2. START ENGINE

3. INSPECT COMPRESSOR FOR METALLIC SOUND

Check if a metallic sound can be heard from the compressor when the A/C switch is on.

If a metallic sound cannot be heard, replace the compressor assembly.

4. INSPECT REFRIGERANT PRESSURE (See page AC−3)

5. STOP ENGINE

6. INSPECT VISUALLY FOR LEAKAGE OF REFRIGERANT FROM SAFETY SEAL

Using a gas leak detector, check for leakage of refrigerant.

If there is any leakage, replace the compressor assembly.

7. REMOVE MANIFOLD GAUGE SET (See page AC−22)

8. CHECK FOR LEAKAGE OF GREASE FROM CLUTCH BEARING

9. CHECK FOR SIGNS OF OIL ON PRESSURE PLATE

If necessary, repair or replace.

10. INSPECT MAGNETIC CLUTCH BEARING FOR NOISE

(a) Start the engine.

(b) Check if abnormal noise is heard from near the compressor when the A/C switch is OFF.

If abnormal noise is being emitted, replace the magnetic clutch.

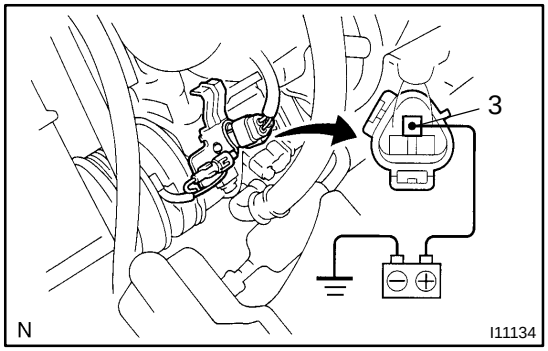

11. INSPECT MAGNETIC CLUTCH OPERATION

(a) Disconnect the connector.

(b) Connect the positive (+) lead from the battery to terminal 3 and the negative (−) lead to body ground.

(c) Check that the magnetic clutch is energized.

If operation is not as specified, replace the magnetic clutch.

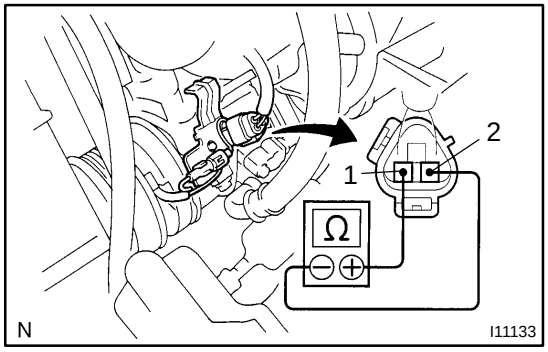

12. INSPECT COMPRESSOR LOCK SENSOR RESISTANCE

(a) Disconnect the connector.

(b) Measure the resistance between terminals 1 and 2.

Standard resistance:

65 to 125 Ω at 20 °C (68 °F)

If resistance is not as specified, replace the compressor.

AC3SN−01

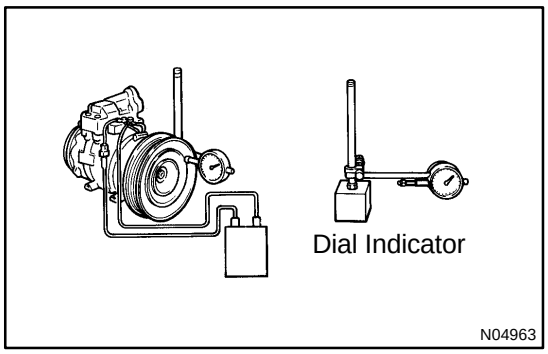

REASSEMBLY

Reassembly is in the reverse order of disassembly (See page AC−62).

AFTER REASSEMBLY, CHECK MAGNETIC CLUTCH CLEARANCE

(a) Set the dial indicator to the pressure plate of the magnetic clutch.

(b) Connect the magnetic clutch lead wire to the positive (+) terminal of the battery.

(c) Check the clearance between the pressure plate and rotor when connecting the negative (−) terminal to the battery.

Standard clearance:
0.5 ± 0.15 mm (0.020 ± 0.0059 in.)

If the clearance is not within the standard range, adjust the clearance using shims to obtain the standard clearance.

Standard thickness:
0.1 mm (0.004 in.)
0.3 mm (0.012 in.)
0.5 mm (0.020in.)

AC3SL−01

REMOVAL

1. RUN ENGINE AT IDLE SPEED WITH A/C ON FOR APPROX. 10 MINUTES

2. STOP ENGINE

3. DISCONNECT NEGATIVE (−) TERMINAL CABLE FROM BATTERY

4. DISCHARGE REFRIGERANT FROM REFRIGERATION SYSTEM

5. DISCONNECT DISCHARGE AND SUCTION HOSES

Remove the 2 nuts and disconnect both hoses.

NOTICE:

Cap the openings immediately to keep moisture or dirt out of the system.

6. REMOVE DRIVE BELT (See page AC−18)

7. REMOVE COMPRESSOR

(a) Disconnect the connector.

(b) Remove the 4 bolts and nut.

(c) Remove the cooler bracket.

(d) Remove the compressor.

AC0DA−02

INSTALLATION

The installation procedures are the removal procedures in reverse order (see page AC−71).

CONDENSER

AC0D8−01

ON−VEHICLE INSPECTION

1. INSPECT CONDENSER FINS FOR BLOCKAGE OR DAMAGE

If the fins are clogged, wash them with water and dry with compressed air.

NOTICE:

Be careful not to damage the fins.

If the fins are bent, straighten them with a screwdriver or pliers.

2. INSPECT CONDENSER AND FITTINGS FOR LEAKAGE

Using a gas leak detector, check for leakage of refrigerant.

If there is leakage, check the tightening torque at the joints.

AC3SP−01

REMOVAL

1. DISCHARGE REFRIGERANT FROM REFRIGERATION SYSTEM

HINT:

At the time of installation, refer to the following:

- Evacuate air from the refrigeration system.
- Charge the system with refrigerant and inspect for leakage of refrigerant.

  Specified amount:
  Access cab, Standard cab:
  600 ± 50 g (21.16 ± 1.76 oz.)
  Double cab: 530 ± 50 g (18.69 ± 1.76 oz.)

Access Cab, Standard Cab:

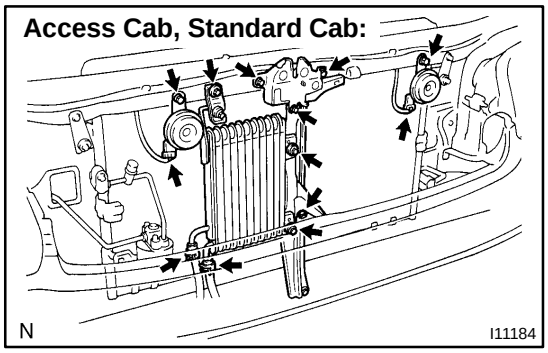

Double Cab:

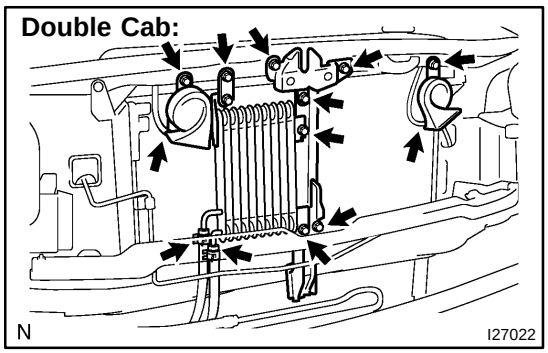

2. A/T models:
REMOVE A/T OIL COOLER

3. REMOVE HORN

4. REMOVE HOOD LOCK

5. REMOVE CENTER BRACE

6. REMOVE RECEIVER AND HOLDER
(See page AC−68)

Access Cab, Standard Cab:

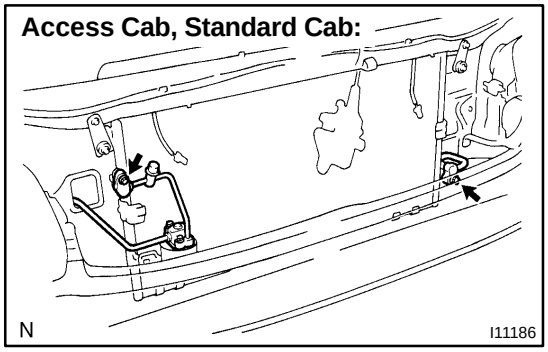

Double Cab:

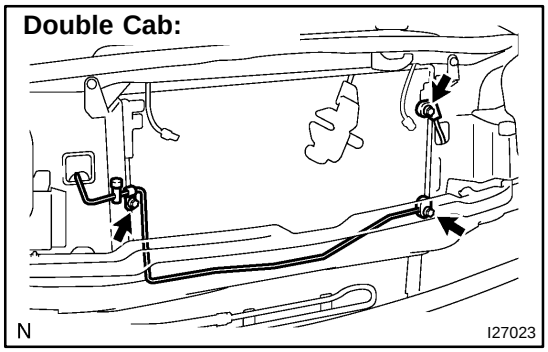

Access Cab, Standard Cab:

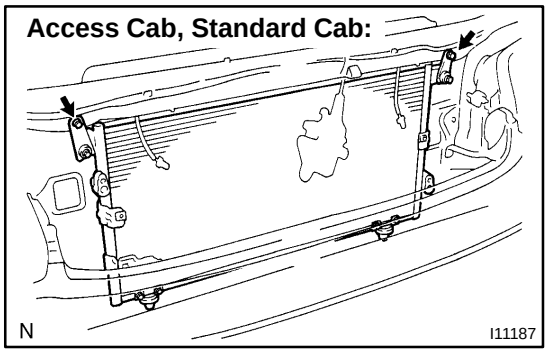

Double Cab:

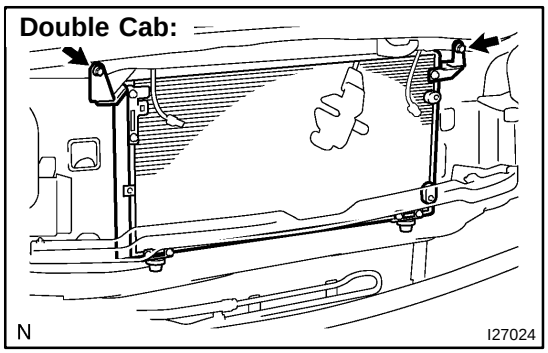

7. DISCONNECT LIQUID TUBE AND DISCHARGE HOSE

Remove the 2 bolts and disconnect both tube and hose.

Torque:10 N·m (100 kgf·cm, 7 ft·lbf)

NOTICE:

Cap the openings immediately to keep moisture or dirt out of the system.

HINT:

At the time of installation, refer to the following:

Lubricate 2 new O−rings with compressor oil and install them to the tubes.

8. REMOVE CONDENSER

(a) Remove the 2 bolts and 2 lower brackets.

(b) Remove the 4 bolts and 2 upper brackets.

(c) Pull the condenser forward and then upward.

HINT:

At the time of installation, refer to the following:

If the condenser is replaced, add compressor oil to the compressor.

Add 40 to 50 cc (1.4 to 1.7 fl.oz.)

Compressor oil: ND−OIL 8 or equivalent

AC3RS−02

COMPONENTS

Access Cab, Standard Cab:

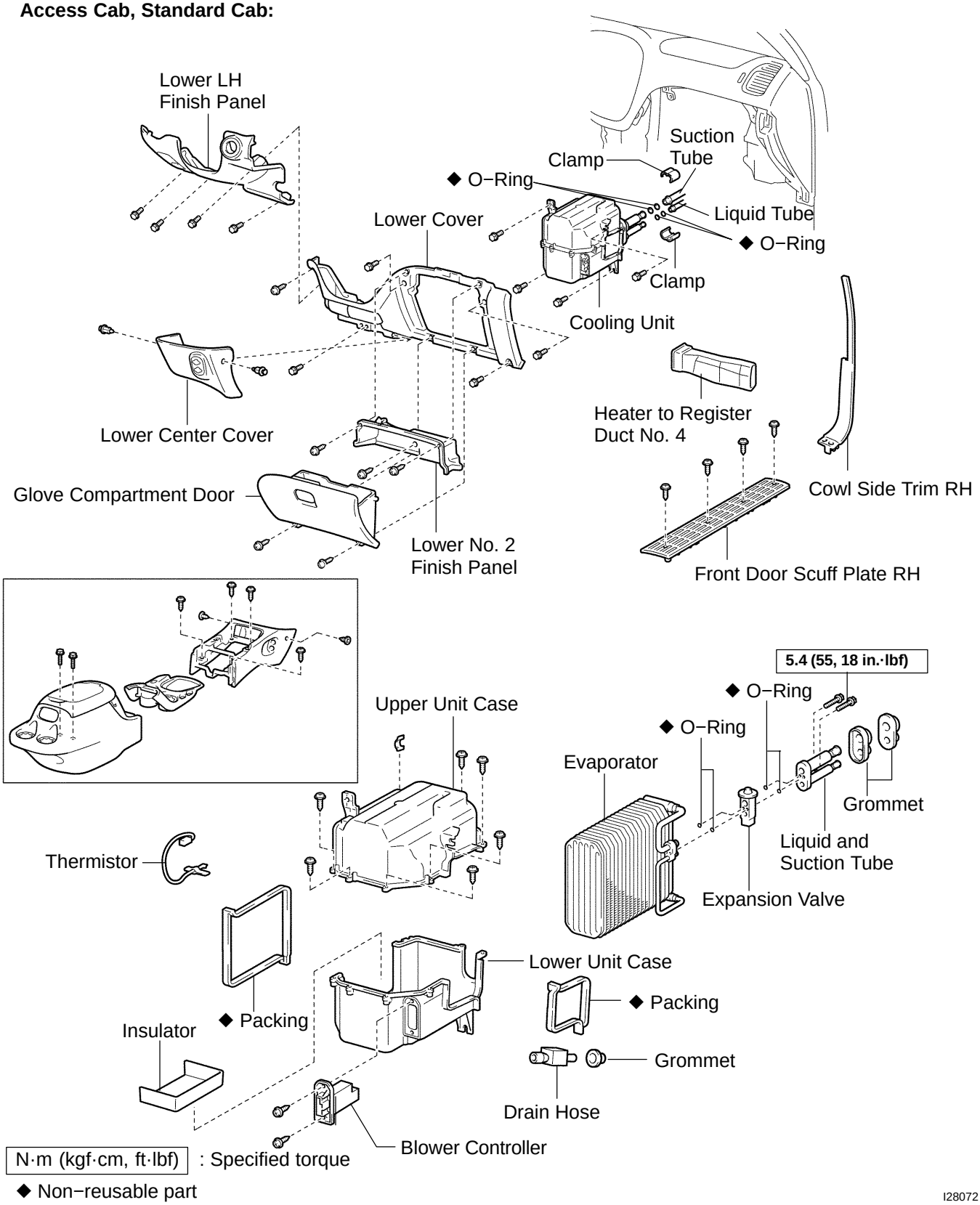

I28072

Double Cab:

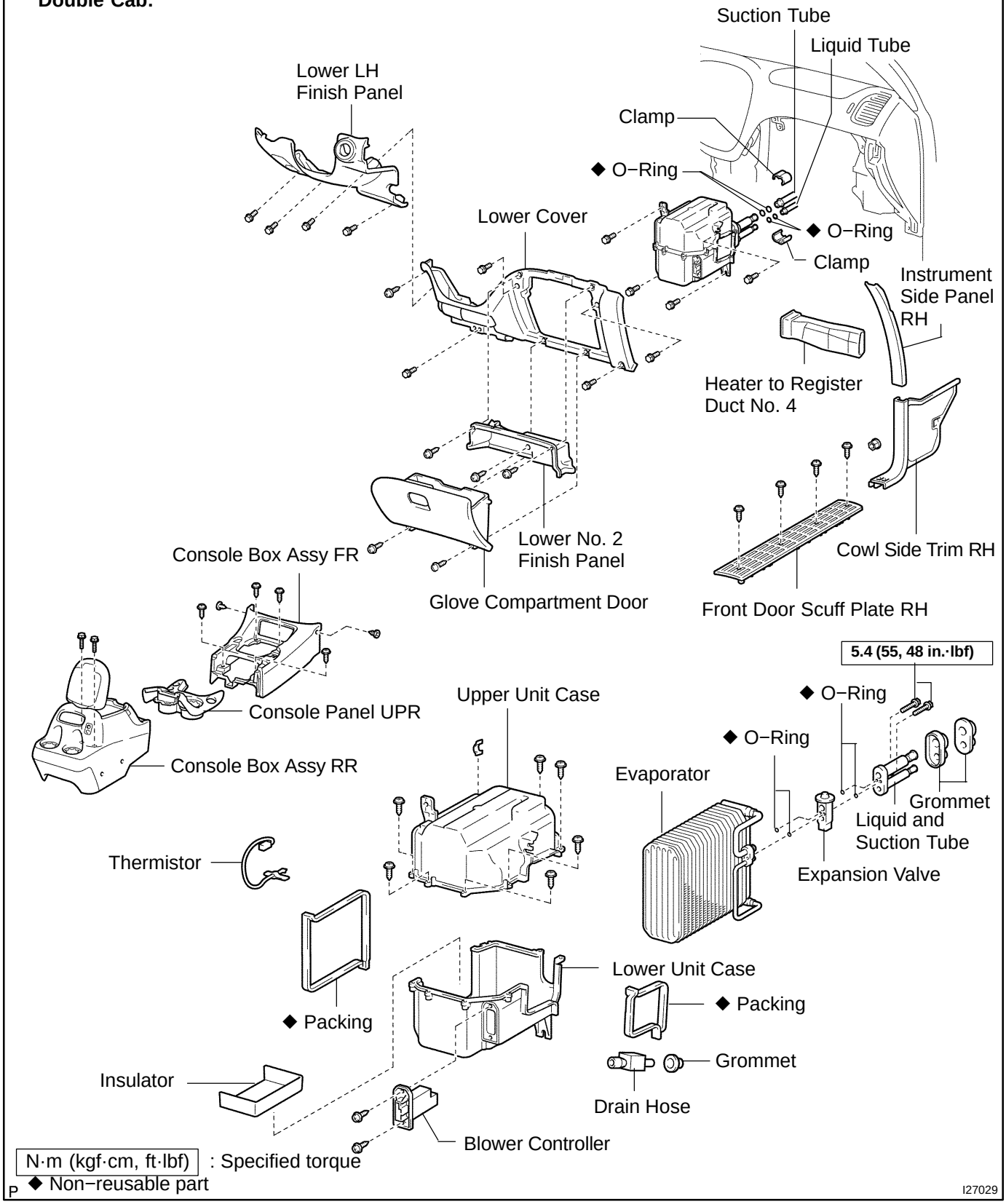
Suction Tube
Liquid Tube
Lower LH
Finish Panel
Clamp
◆ O−Ring
Lower Cover
◆ O−Ring
Clamp
Instrument
Side Panel
RH
Heater to Register
Duct No. 4
Lower No. 2
Finish Panel
Console Box Assy FR
Glove Compartment Door
Cowl Side Trim RH
Front Door Scuff Plate RH
5.4 (55, 48 in.·lbf)
◆ O−Ring
Upper Unit Case
◆ O−Ring
Console Panel UPR
Console Box Assy RR
Evaporator
Grommet
Liquid and
Suction Tube
Thermistor
Expansion Valve
Lower Unit Case
◆ Packing
◆ Packing
Grommet
Insulator
Drain Hose
Blower Controller
N·m (kgf·cm, ft·lbf) : Specified torque
◆ Non−reusable part
I27029

AC272−03

DISASSEMBLY

1. REMOVE BLOWER RESISTOR

Remove the 2 screws and blower resistor.

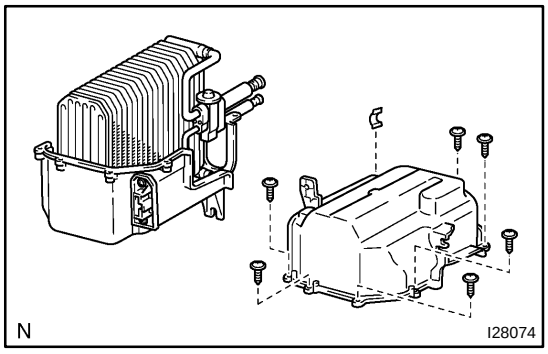

2. SEPARATE UPPER AND LOWER UNIT CASES

(a) Disconnect the connector clamp from the upper unit case.
(b) Using a knife, cut off each packing.
(c) Remove the clip and 6 screws.
(d) Separate the upper and lower unit cases, then pull out the thermistor from the evaporator.

3. REMOVE EVAPORATOR FROM LOWER UNIT CASE

HINT:
At the time of reassembly, refer to the following:
If the evaporator is replaced, add compressor oil to the compressor.

Add 40 to 50 cc (1.4 to 1.7 fl.oz.)
Compressor oil: ND−OIL 8 or equivalent

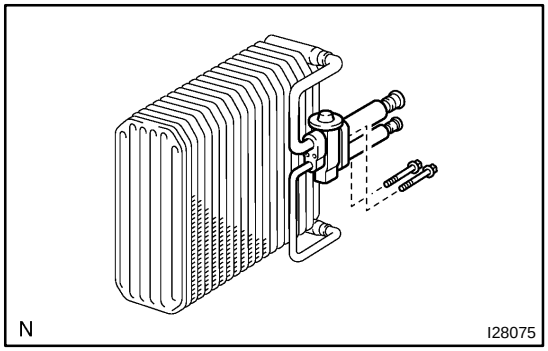

4. REMOVE EXPANSION VALVE

Using a hexagon wrench (5.0 mm, 0.20 in.), remove the 2 bolts and separate the expansion valve, evaporator and tubes.

Torque: 5.4 N·m (55 kgf·cm, 48 in.·lbf)

HINT:
At the time of reassembly, refer to the following:
Lubricate 4 new O−rings with compressor oil and install them to the tubes and valve.

AC22L−04

INSPECTION

1. CHECK EVAPORATOR FINS FOR BLOCKAGE

If the fins are clogged, clean them with compressed air.

2. CHECK FITTING FOR CRACKS OR SCRATCHES

If necessary, repair or replace.

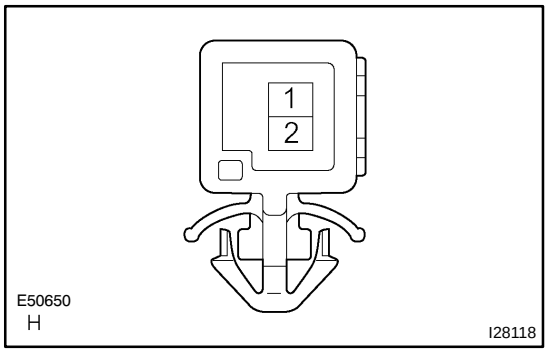

3. INSPECT THERMISTOR RESISTANCE

(a) Remove the A/C evaporator temperature sensor (cooler thermister No.1).

(b) Measure the resistance according tor the value(s) in the table below.

Standard:

Tester connection	Condition	Specified condition
1 − 2	−10˚C (14˚F)	7.40 to 9.20 kΩ
1 − 2	−5˚C (23˚F)	5.65 to 7.00 kΩ
1 − 2	0˚C (32˚F)	4.35 to 5.40 kΩ
1 − 2	5˚C (41˚F)	3.40 to 4.20 kΩ
1 − 2	10˚C (50˚F)	2.68 to 3.30 kΩ
1 − 2	15˚C (59˚F)	2.10 to 2.60 kΩ
1 − 2	20˚C (68˚F)	1.66 to 2.10 kΩ
1 − 2	25˚C (77˚F)	1.32 to 1.66 kΩ
1 − 2	30˚C (86˚F)	1.05 to 1.35 kΩ

NOTICE:

- **Even slightly touching the sensor may change the resistance value. Be sure to hold the connector of the sensor.**
- **When measuring, the sensor temperature must be the same as the ambient temperature.**

HINT:
As the temperature increases, the resistance decreases (see the graph below).

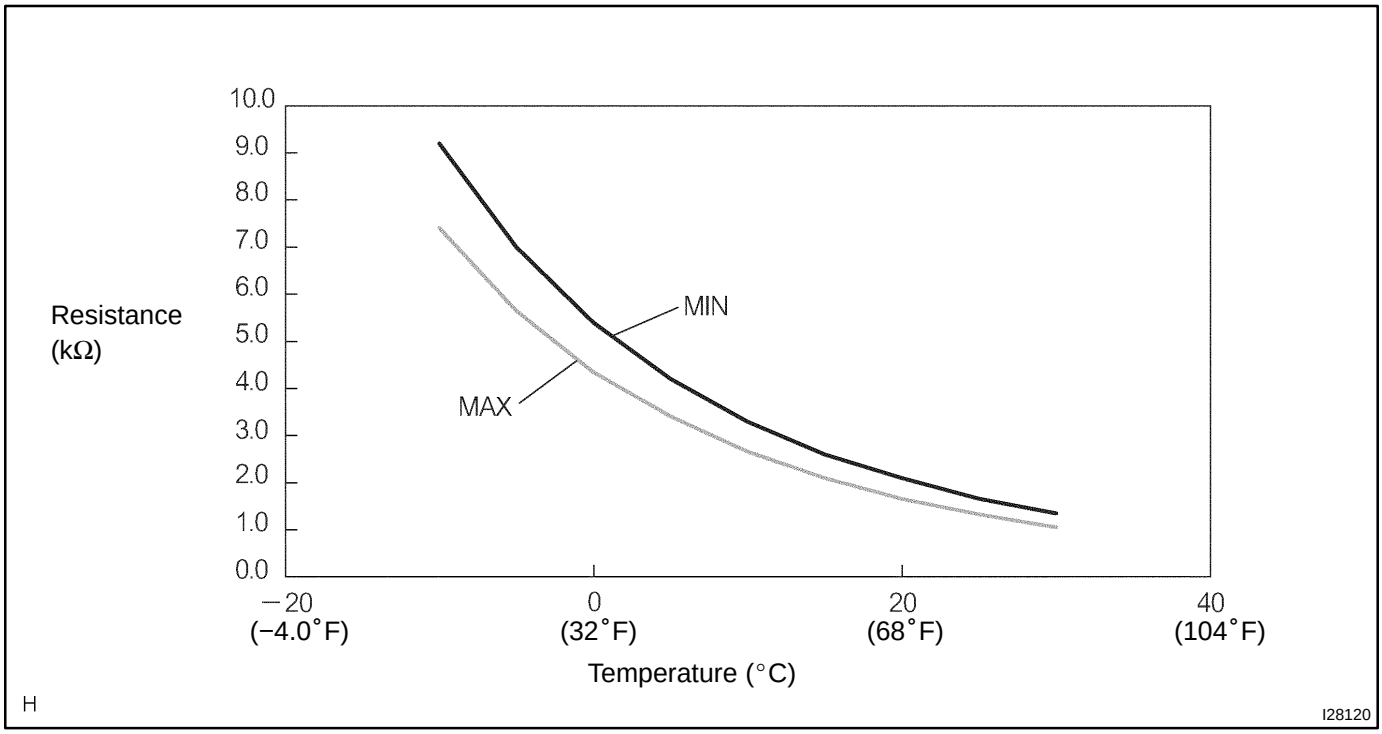

If the result is not as specified, replace the sensor.

AC0CJ−02

INSTALLATION

The installation procedures are the removal procedures in reverse order (see page AC−31).

COOLING UNIT

AC271−03

ON−VEHICLE INSPECTION

1. INSPECT FOR LEAKAGE OF REFRIGERANT

(a) Remove the glove compartment door.
(b) Remove the lower No. 2 finish panel.
(c) Remove the lower center cover.
(d) Remove the lower LH finish panel.
(e) Remove the lower cover (See page BO−111).

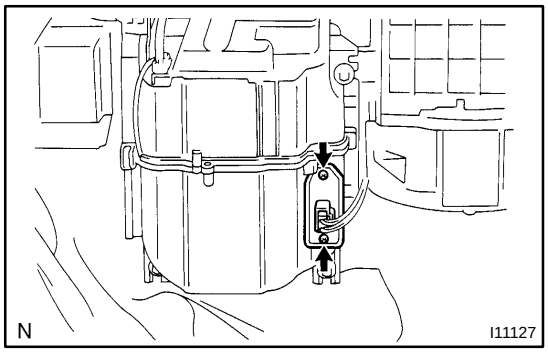

(f) Remove the blower resistor.
  (1) Disconnect the connector.
  (2) Remove the 2 screws and blower resistor.
(g) Using a gas leak detector, check for leakage.

If there is leakage, check the tightening torque at the joints or check the evaporator.

(h) Install the blower resistor with the 2 screws.
(i) Install the lower cover.
(j) Install the lower LH finish panel.
(k) Install the lower center cover.
(l) Install the lower No. 2 finish panel.
(m) Install the glove compartment door (See page BO−120).

2. INSPECT EXPANSION VALVE

(a) Check quantity of gas during refrigeration cycle.
(b) Set the manifold gauge set.
(c) Run the engine.
  (1) Run the engine at 1,500 rpm for at least 5 minutes.
  (2) Then check that the high pressure reading is 1.37 to 1.57 Mpa (14 to 16 kgm/cm^2, 199 to 288 psi).
(d) Check the expansion valve.

If the expansion valve is faulty, the low pressure reading will drop to 0 kPa (0 kgf/cm^2, 0 psi).

HINT:

When the low pressure reading drops to 0 kPa (0 kgf/cm^2, 0 psi), there is no difference in temperature between the IN and OUT sides of the receiver.

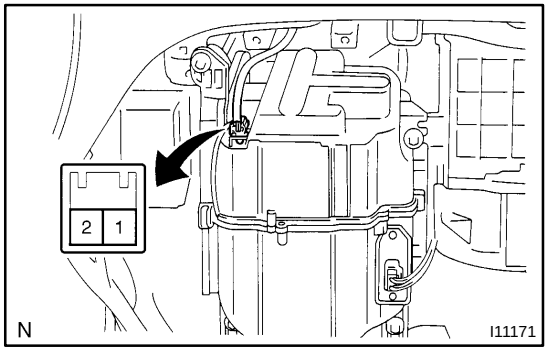

3. INSPECT THERMISTOR RESISTANCE

(a) Disconnect the connector.
(b) Measure the resistance between terminals.
  Standard resistance: 1,500 Ω at 25°C (77°F)

If resistance is not as specified, replace the thermistor.

AC0CI−02

REASSEMBLY

The reassembly procedures are the disassembly procedures in reverse order (see page AC−33).

AC3RT−02

REMOVAL

1. DISCHARGE REFRIGERANT FROM REFRIGERATION SYSTEM

HINT:

At the time of installation, refer to the following:

- Evacuate air from the refrigeration system.
- Charge system with refrigerant and inspect for leakage of refrigerant.

  Specified amount:
  Access cab, Standard cab:
  600 ± 50 g (21.16 ± 1.76 oz.)
  Double cab: 530 ± 50 g (18.69 ± 1.76 oz.)

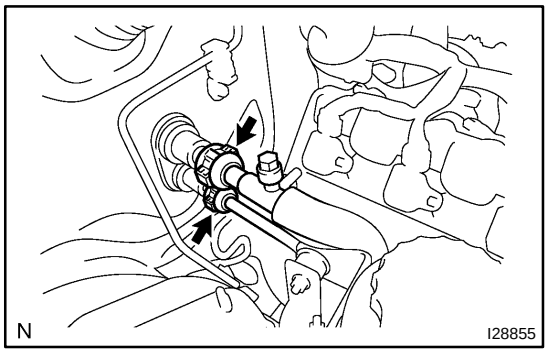

2. DISCONNECT LIQUID AND SUCTION TUBE

(a) Using SST, remove the piping clamp.
SST 09870−00025 (Liquid tube)

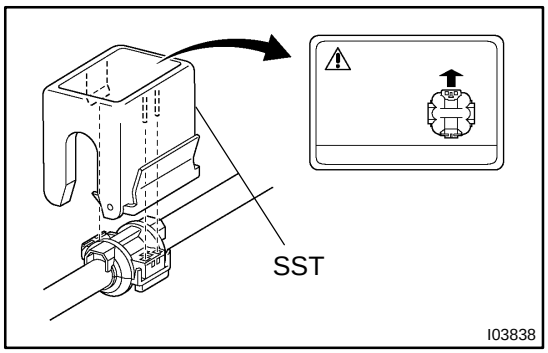

(1) Install SST to the piping clamp.

HINT:

Confirm the directions of the piping clamp claw and SST using the illustration on the caution label.

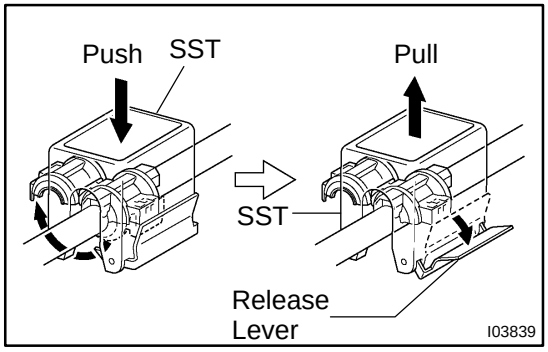

(2) Push down SST and release the clamp lock.

NOTICE:

Be careful not to deform the tubes, when pushing SST.

(3) Pull SST slightly and push the release lever, then remove the piping clamp with SST.
(4) Remove the piping clamp from SST.

(b) Disconnect both tubes.

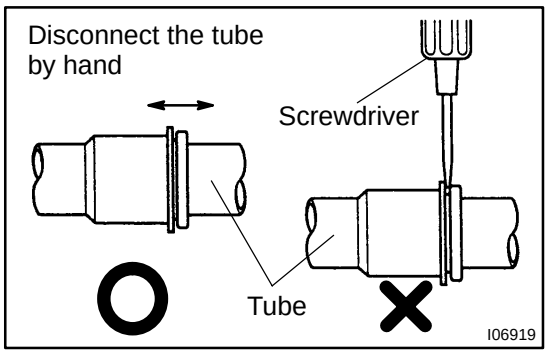

NOTICE:

- **Do not use tools like a screwdriver to remove the tube.**
- **Cap the openings immediately to keep moisture or dirt out of the system.**

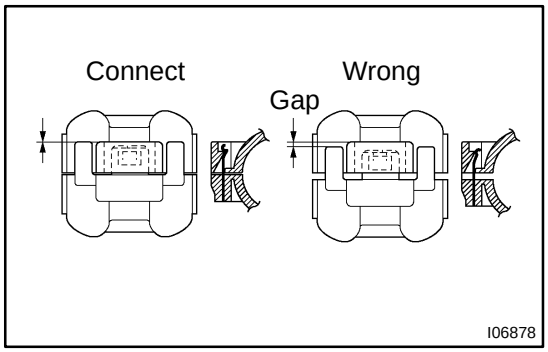

HINT:

At the time of installation, refer to the following:

- Lubricate 2 new O−rings with compressor oil and install them to the tubes.
- After connection, check the claw of the piping clamp is securely engaged.

3. REMOVE GLOVE COMPARTMENT PARTS

4. REMOVE LOWER NO. 2 FINISH PANEL

5. REMOVE LOWER CENTER COVER

6. REMOVE LOWER LH FINISH PANEL

7. REMOVE LOWER COVER (See page BO−111)

8. REMOVE NO. 4 HEATER TO REGISTER DUCT

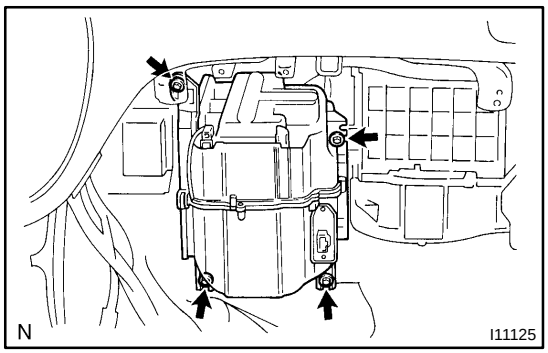

9. REMOVE COOLING UNIT

(a) Disconnect the connectors.

(b) Remove the 3 screws, bolt and the cooling unit.

AC3SC−01

INSTALLATION

1. 1GR−FE engine:
INSTALL DRIVE BELT

(a) While turning the belt tensioner counterclockwise, align the holes. Insert a 6 mm (0.24 in.) bar into the holes to fix the belt tensioner.
(b) Install the drive belt.
(c) While turning the belt tensioner counterclockwise, remove the bar.

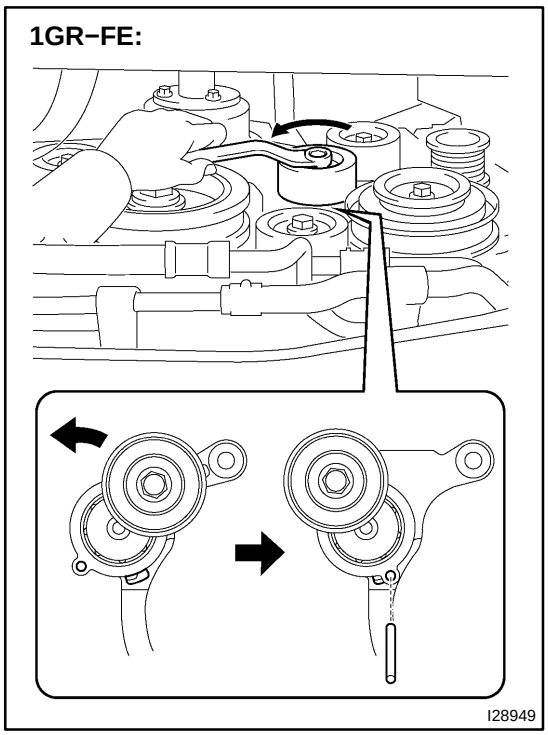

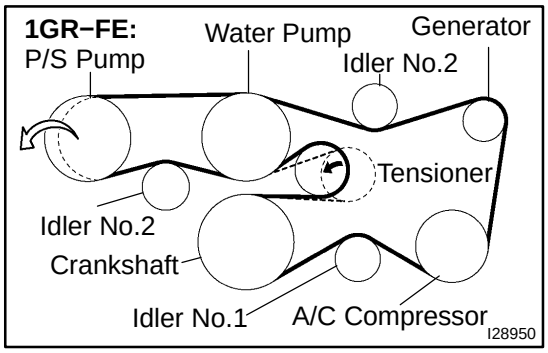

(d) If it is hard to install the drive belt, perform the following procedures:
  (1) Wrap the drive belt around all the pulleys and idlers, except for the P/S pump, as shown in the illustration.
  (2) While releasing belt tension by turning the belt tensioner counterclockwise, wrap the drive belt around the P/S pump.
(e) Install the engine under cover.

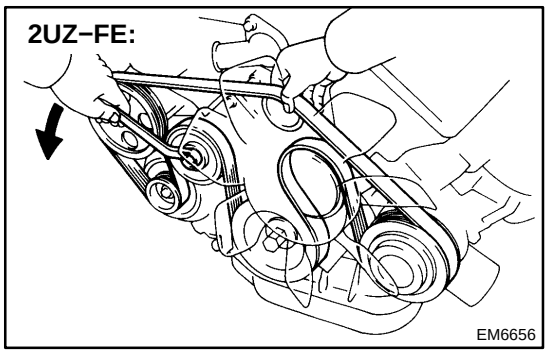

2. 2UZ−FE engine:
INSTALL DRIVE BELT

Turn the drive belt tensioner counterclockwise and install the drive belt.

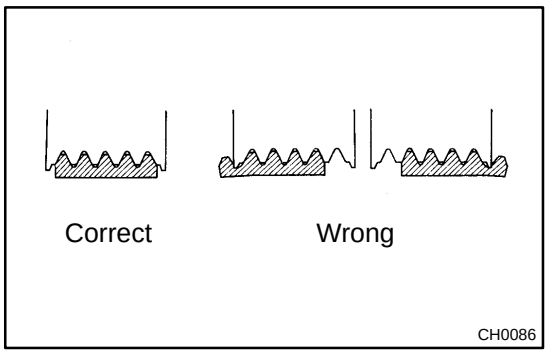

DRIVE BELT

AC3SB−01

ON−VEHICLE INSPECTION

1. INSPECT DRIVE BELT'S INSTALLATION CONDITION

Check that the drive belt fits properly in the ribbed grooves.

2. 1GR−FE engine:
INSPECT DRIVE BELT TENSIONER

Check that nothing gets caught in the tensioner by turning it clockwise and counterclockwise.

If a malfunction exists, replace the tensioner.

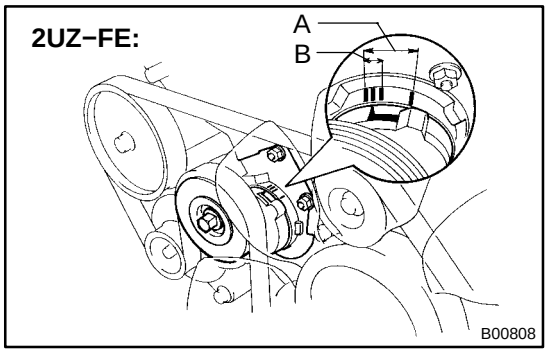

3. 2UZ−FE engine:
INSPECT DRIVE BELT TENSION

Check that the tension is within the range A on the auto tensioner scale.

If the tension is not within the range A on the scale, replace the belt with a new one.

HINT:

When replacing the drive belt with a new one, the belt tension should be within range B on the belt tensioner scale.

AC26X−03

REMOVAL

1. 1GR−FE engine:
REMOVE DRIVE BELT

(a) Remove the engine under cover.

(b) Loosen the belt tension by turning the belt tensioner counterclockwise, and remove the drive belt from the belt tensioner.

1GR−FE:

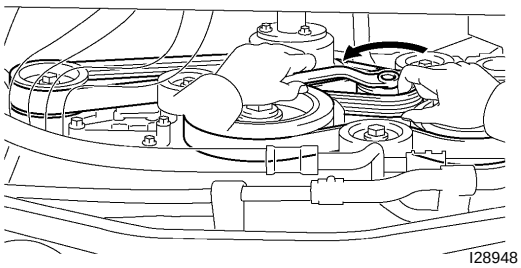

I28948

2. 2UZ−FE engine:
REMOVE DRIVE BELT

Loosen the drive belt tension by turning the drive belt tensioner counterclockwise, and remove the drive belt.

2UZ−FE:

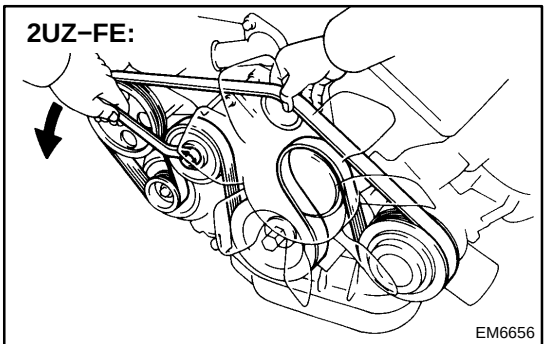

EM6656

AC06V−04

COMPONENTS

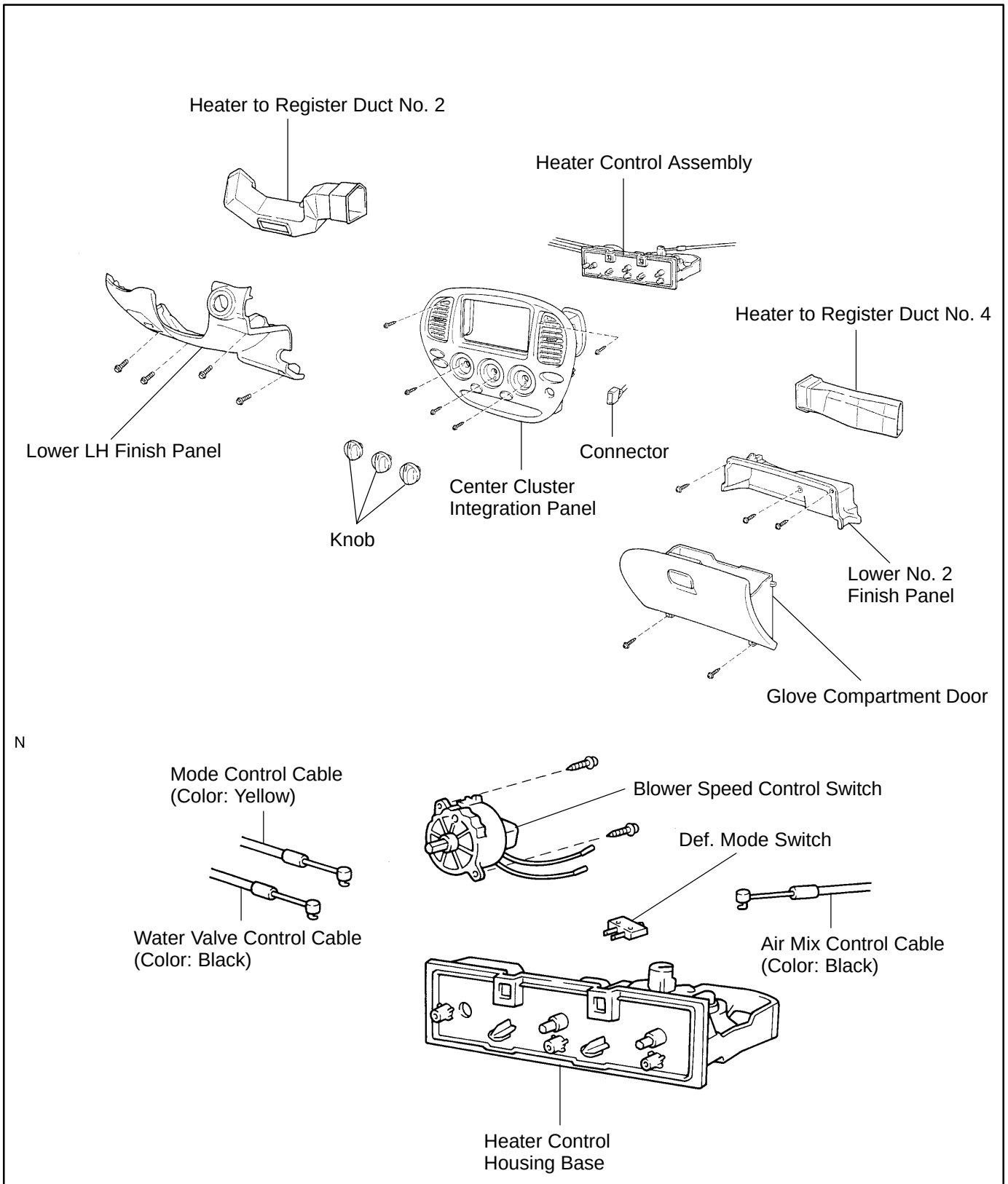

AC27K−03

DISASSEMBLY

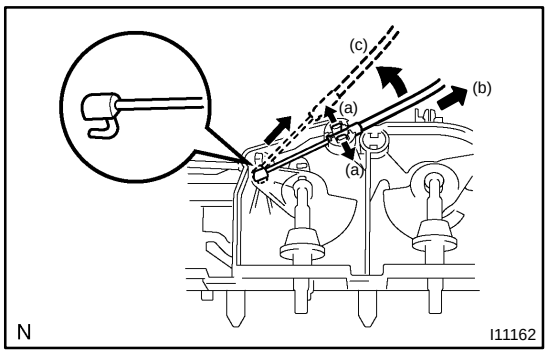

1. REMOVE HEATER CONTROL CABLES

(a) Using a screwdriver, push the claws left and right.

HINT:

Tape the screwdriver tip before use.

(b) Pull the cable rearward until the claws are disengaged.

(c) Remove the cable.

(d) Remove the inner cable from the heater control assembly.

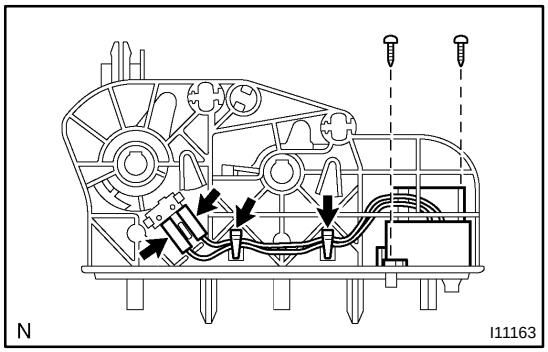

2. REMOVE BLOWER SPEED CONTROL SWITCH

(a) Disconnect the connector.

(b) Remove the 2 screws.

(c) Remove the switch.

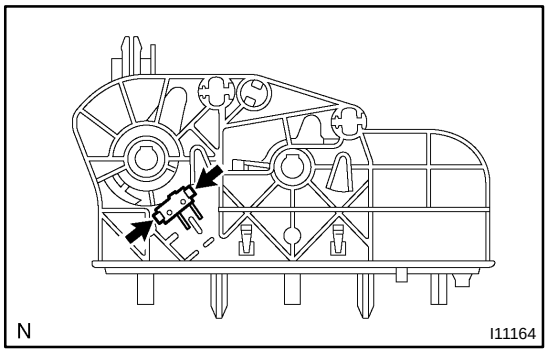

3. REMOVE DEF. MODE SWITCH

Release the 2 claws, then remove the switch.

HINT:

Tape the screwdriver tip before use.

AC27L−03

INSPECTION

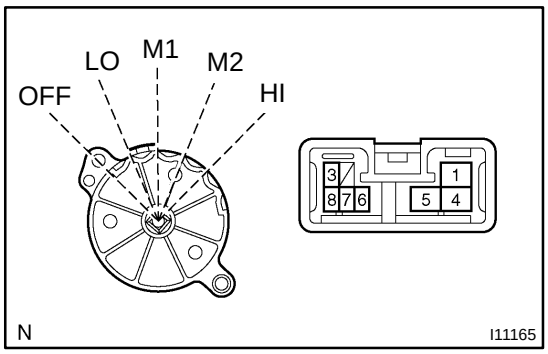

1. INSPECT BLOWER SPEED CONTROL SWITCH CONTINUITY

Switch position/ Circuit	Tester connection	Specified condition
OFF	−	No continuity
LO	1 − 3	Continuity
M1	1 − 3 − 4	Continuity
M2	1 − 3 − 8	Continuity
HI	1 − 3 − 5	Continuity
Illumination circuit	6 − 7	Continuity

If continuity is not as specified, replace the switch and check the bulb.

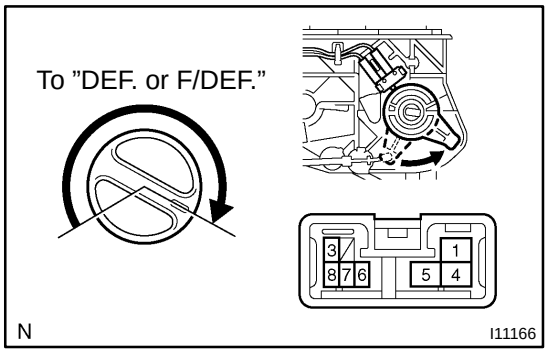

2. INSPECT DEF. MODE SWITCH

(a) Check the continuity exists between terminals 1 and 3 of the blower switch connector when turning the mode selector to the DEF. position and F/DEF. position.

If no continuity exists, proceed to the next step.

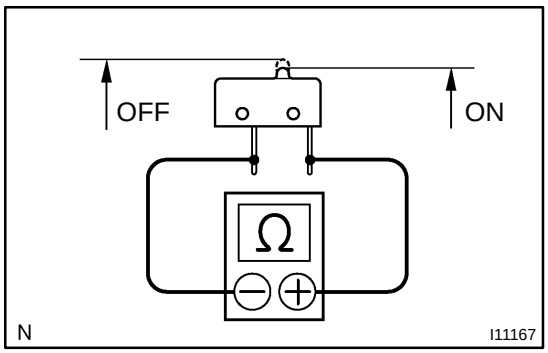

(b) Check the continuity exists between the terminals of the A/C mode switch.

If no continuity exists, replace the A/C mode switch.

If continuity exists, check or replace the heater control housing base.

AC27P−03

INSTALLATION

1. INSTALL HEATER CONTROL ASSEMBLY

(a) Connect the connectors.

(b) Pass the heater control as shown in the illustration.

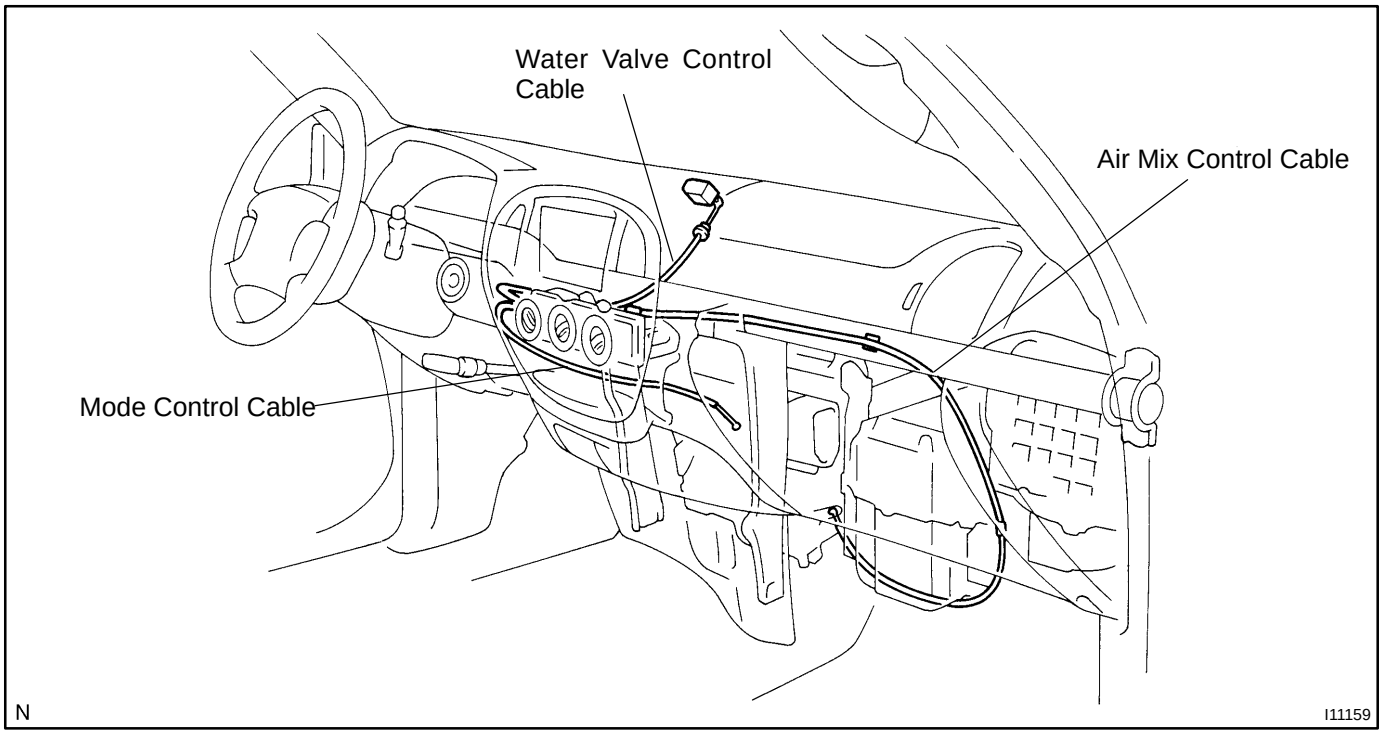

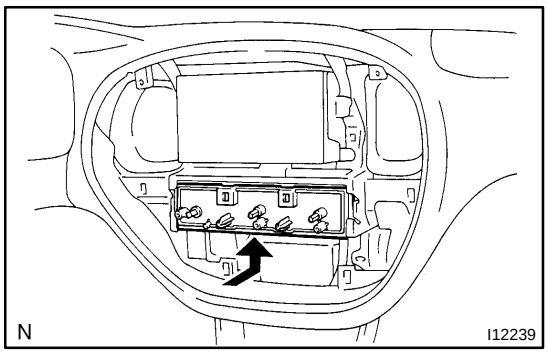

(c) When using the removed one:
Install the heater control assembly.

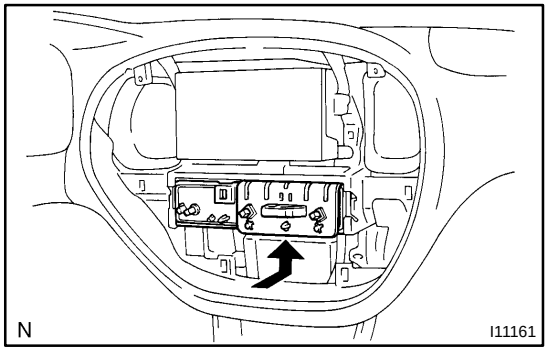

(d) When using a new one:
Install the heater control assembly.

2. ADJUST HEATER CONTROL CABLES

(a) Set the mode control dial at the ”FACE” position.

(b) Set the temperature control dial at the ”MAX. COOL” position.

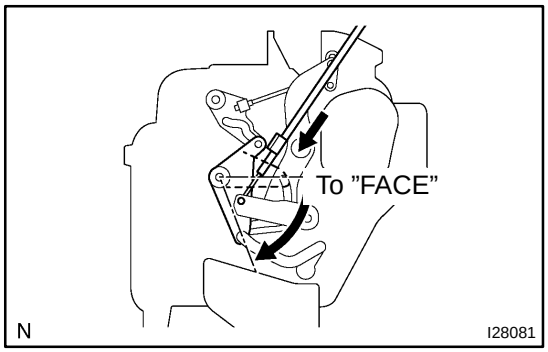

(c) Adjust the mode control cable.
Pull the air inlet control link to the ”FACE” position, connect the control cable and lock the clamp.

HINT:

Lock the clamp while lightly pushing the outer cable in the direction shown by the arrow in the illustration.

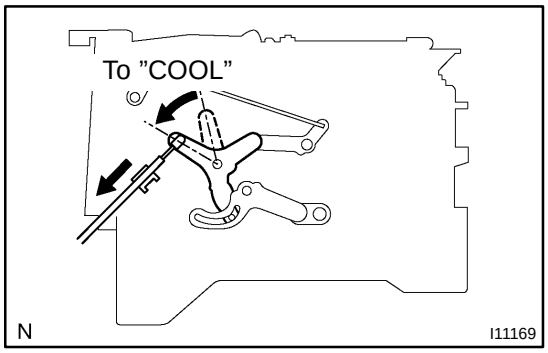

(d) Adjust the air mix control cable.
Pull the air inlet control link to the ”COOL” position, connect the control cable and lock the clamp.

HINT:

Lock the clamp while lightly pulling the outer cable in the direction shown by the arrow in the illustration.

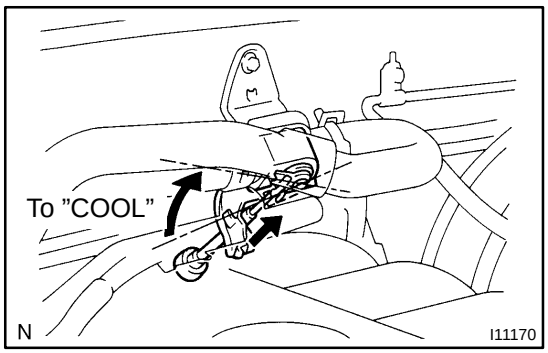

(e) Adjust the water valve control cable.
Pull the air inlet control link to the ”COOL” position, connect the control cable and lock the clamp.

HINT:

Lock the clamp while lightly pulling the outer cable in the direction, shown by the arrow in the illustration.

3. INSTALL HEATER TO REGISTER DUCT NO. 4

4. INSTALL LOWER NO. 2 FINISH PANEL

5. INSTALL GLOVE COMPARTMENT PANEL

6. INSTALL HEATER TO REGISTER DUCT NO. 2

7. INSTALL LOWER LH FINISH PANEL

(See page BO−120)

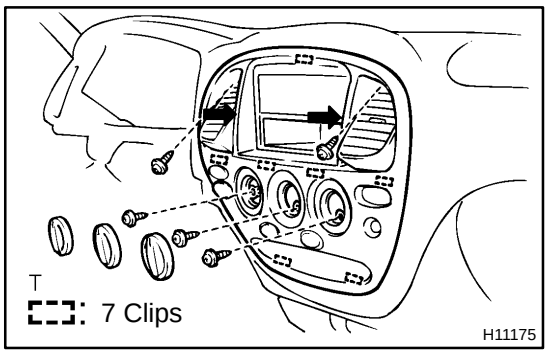

8. INSTALL CENTER CLUSTER INTEGRATION PANEL

(a) When replacing the heater control assembly:
Pull off the cover.

(b) Install the center cluster integration panel, then connect the 2 connectors.

(c) Install the 5 screws.

(d) Install the 3 heater control knobs.

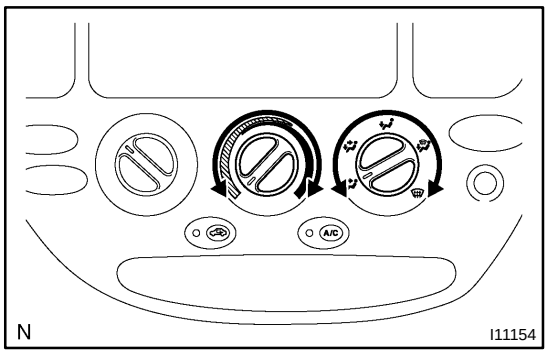

HEATER CONTROL ASSEMBLY

AC27J−03

ON−VEHICLE INSPECTION

INSPECT HEATER CONTROL DIAL AND LEVER OPERATION

Move the control dial and lever left and right and check for stiffness and binding through the full range of the levers.

If a click sound cannot be heard or recoil is felt, adjust the control cable or check the control cable and heater control assembly.

AC27M−03

REASSEMBLY

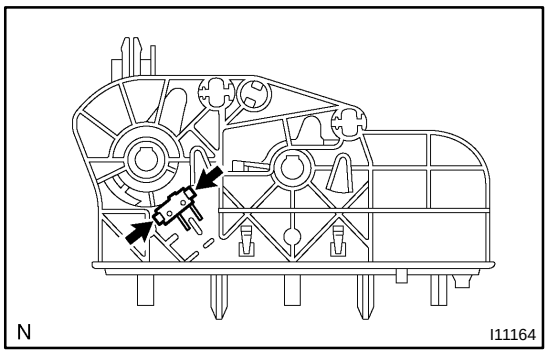

1. INSTALL DEF. MODE SWITCH

Install the switch.

HINT:

After installation, check that the 2 claws are securely engaged.

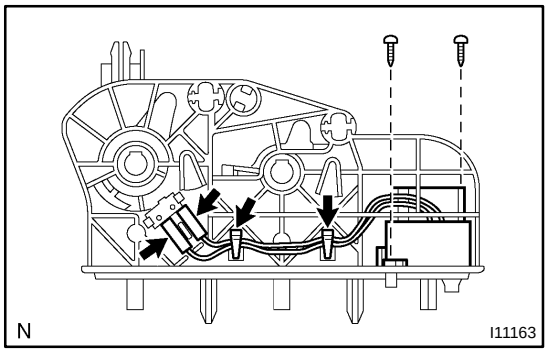

2. INSTALL BLOWER SPEED CONTROL SWITCH

(a) Install the switch with the 2 screws.

(b) Connect the connector.

3. INSTALL HEATER CONTROL CABLES

Install the heater control cables to the heater control assembly.

AC27O−03

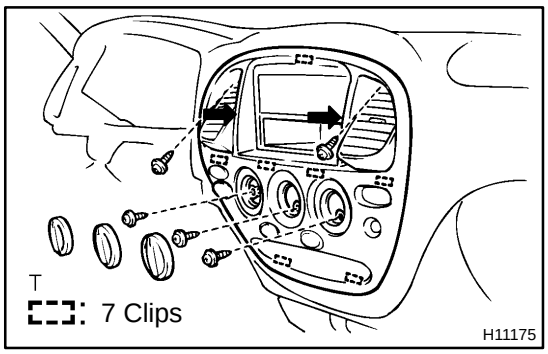

REMOVAL

1. REMOVE CENTER CLUSTER INTEGRATION PANEL

(a) Remove the 3 heater control knobs.

(b) Remove the 5 screws.

(c) Remove the integration control panel by pulling the portions indicated by arrows in the illustration.

(d) Disconnect the connector.

2. REMOVE LOWER LH FINISH PANEL

3. REMOVE HEATER TO REGISTER DUCT NO. 2

4. REMOVE GLOVE COMPARTMENT DOOR

5. REMOVE LOWER NO. 2 FINISH PANEL

6. REMOVE HEATER TO REGISTER DUCT NO. 4 (See page BO−111)

7. DISCONNECT HEATER CONTROL CABLES

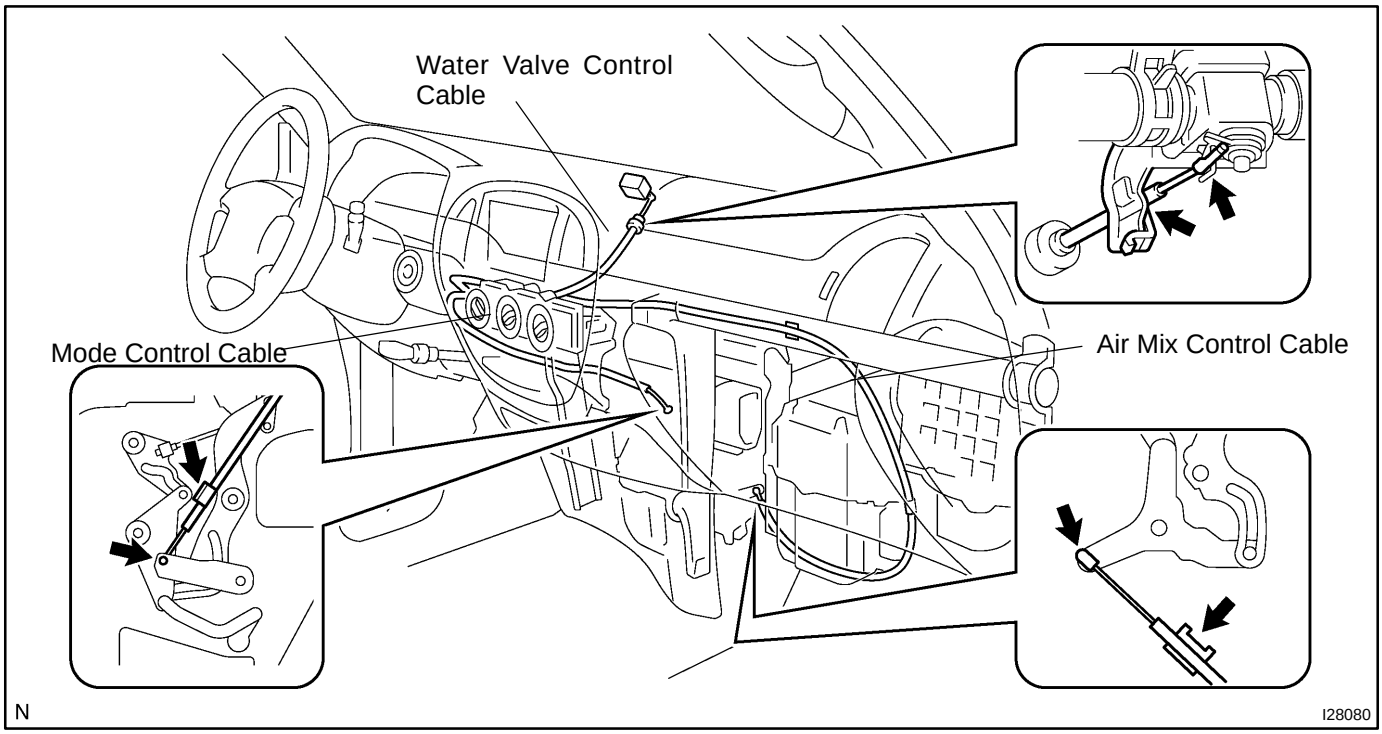

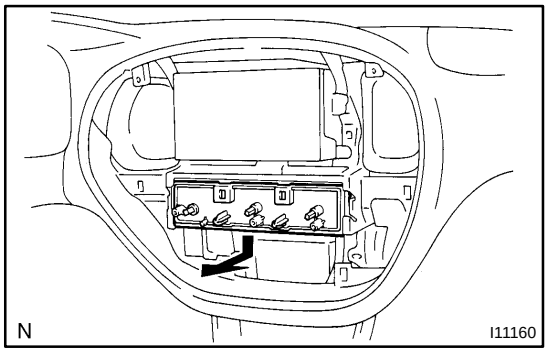

8. REMOVE HEATER CONTROL ASSEMBLY

Remove the heater control assembly, then disconnect the connectors.

HEATER UNIT

COMPONENTS

AC3RU−02

Access Cab, Standard Cab:

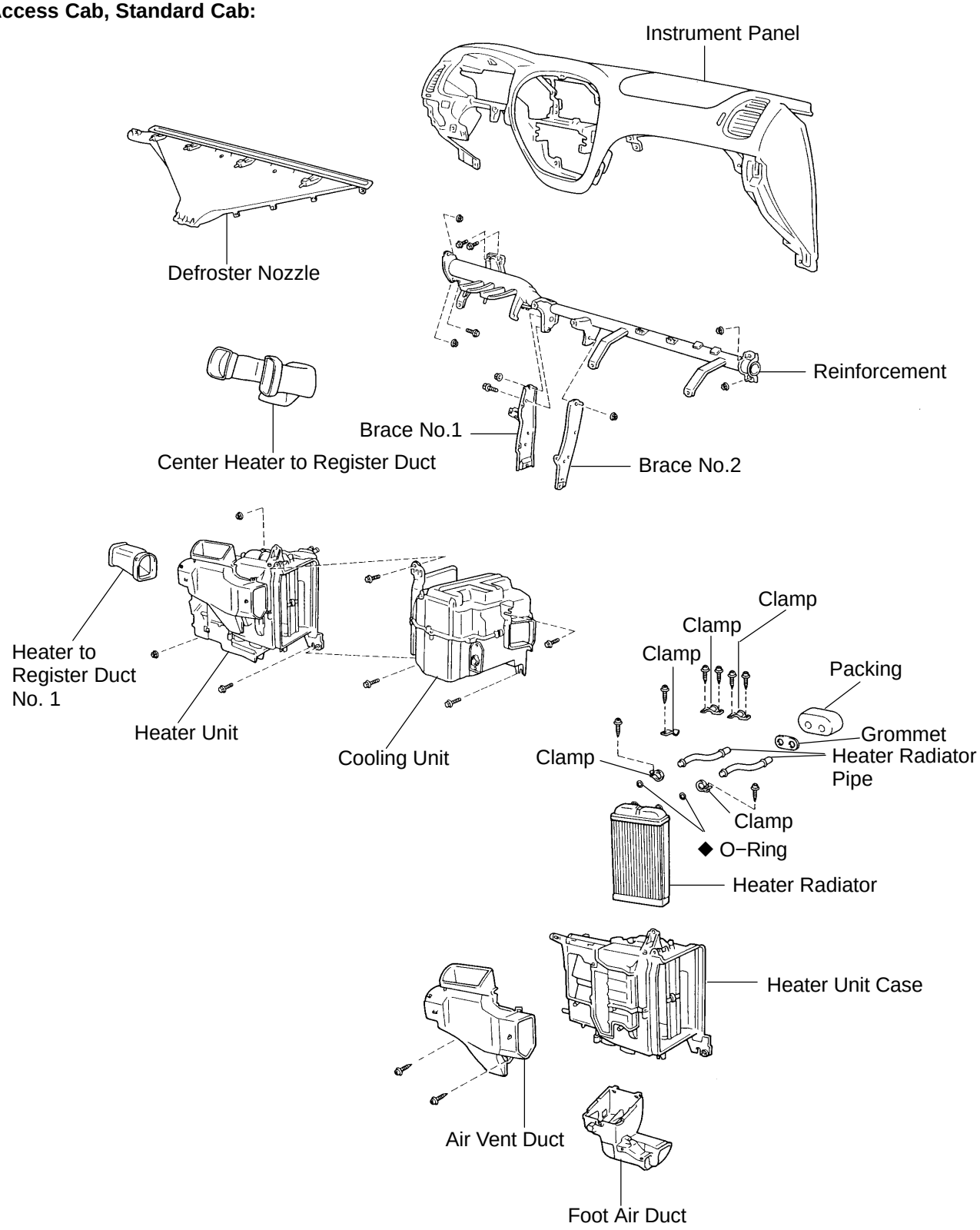

◆ Non−reusable part

N

I11128

Double Cab:

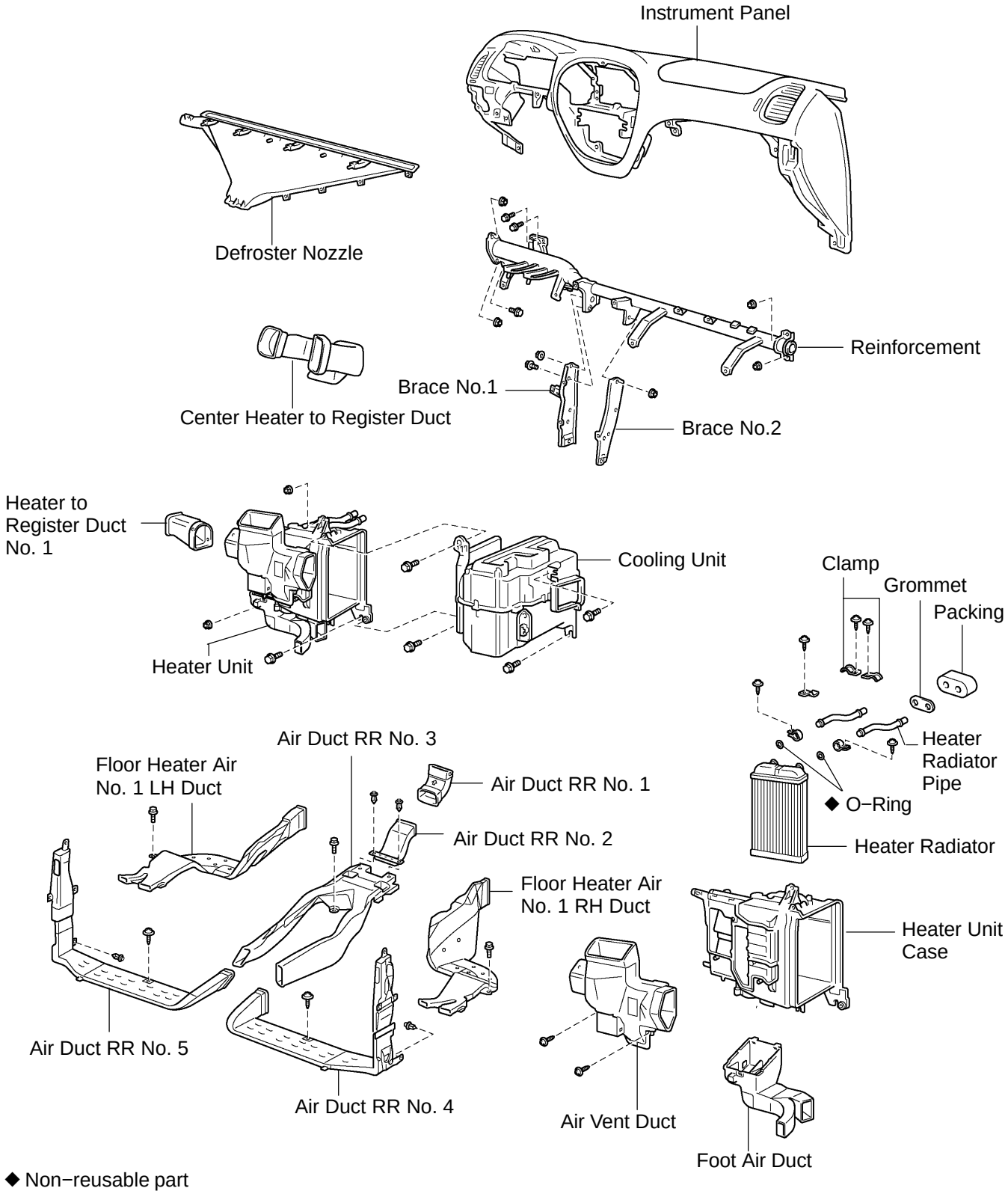

◆ Non−reusable part

N

I27019

AC22M−05

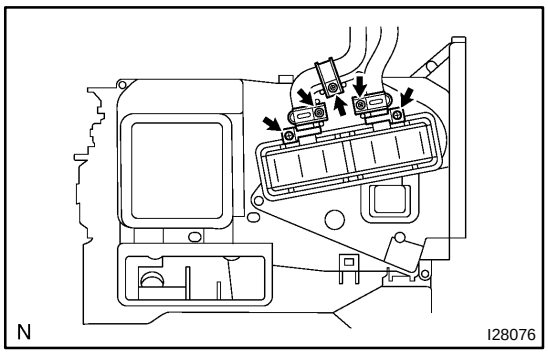

DISASSEMBLY

1. REMOVE HEATER RADIATOR

(a) Remove the 3 screws and 3 clamps.

(b) Pull out the heater radiator.

(c) Remove the 2 screws and 2 clips, then disconnect the heater radiator pipes.

2. REMOVE AIR VENT DUCT

Remove the 2 screws and duct.

AC22N−02

INSPECTION

INSPECT FINS FOR BLOCKAGE

If the fins are clogged, clean them with compressed air.

AC0CO−02

INSTALLATION

The installation procedures are the removal procedures in reverse order (see page AC−40).

AC0CN−02

REASSEMBLY

The reassembly procedures are the disassembly procedures in reverse order (see page AC−41).

AC3RV−02

REMOVAL

1. REMOVE COOLING UNIT (See page AC−31)

2. DRAIN ENGINE COOLANT FROM RADIATOR

HINT:

It is not necessary to drain out all the coolant.

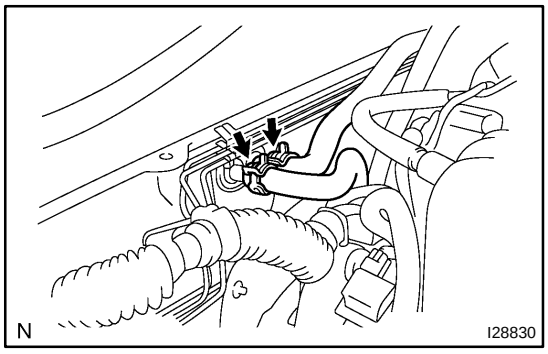

3. DISCONNECT WATER HOSES FROM HEATER RADIATOR PIPES

(a) Using pliers, grip the claws of clips and slide the clips along the hoses.

(b) Disconnect the water hoses.

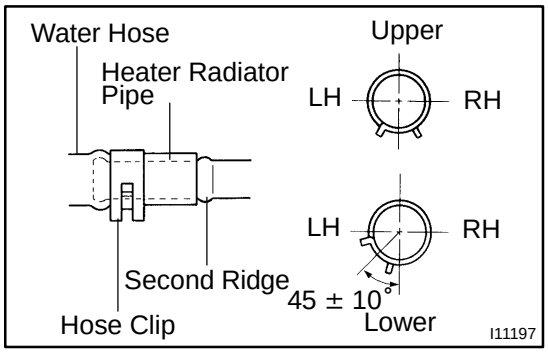

HINT:

At the time of installation, refer to the following:

- Push the water hose onto the heater radiator pipe up to the second ridge on the pipe.
- Install the hose clip to the position shown in the illustration.

4. REMOVE INSTRUMENT PANEL AND REINFORCEMENT (See page BO−111)

5. REMOVE DEFROSTER NOZZLE AND HEATER TO REGISTER DUCT

6. REMOVE HEATER UNIT

Remove the 3 nuts and heater unit.

Access Cab, Standard Cab:

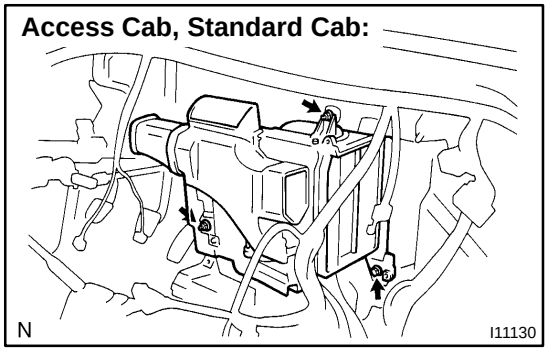

Double Cab:

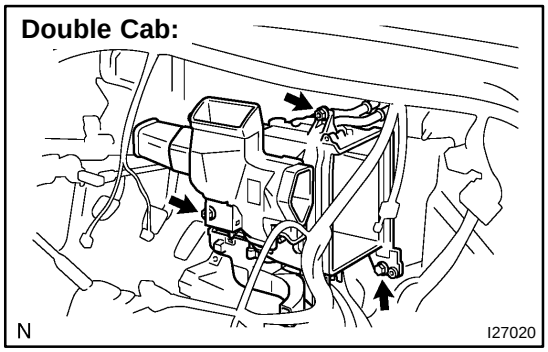

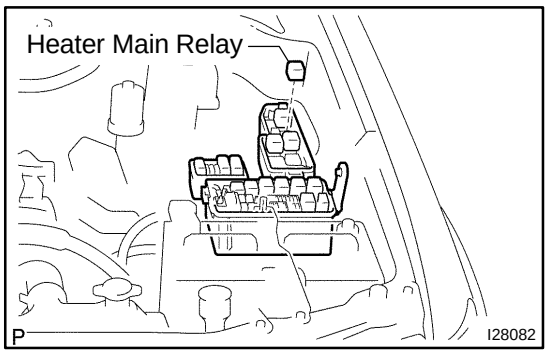

HEATER MAIN RELAY

AC3RZ−02

INSPECTION

1. Access cab, Standard cab:

REMOVE HEATER MAIN RELAY FROM ENGINE ROOM RELAY BLOCK

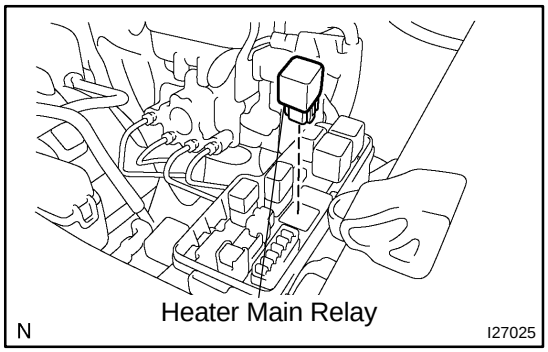

2. Double cab:

REMOVE HEATER MAIN RELAY FROM ENGINE ROOM RELAY BLOCK NO. 2

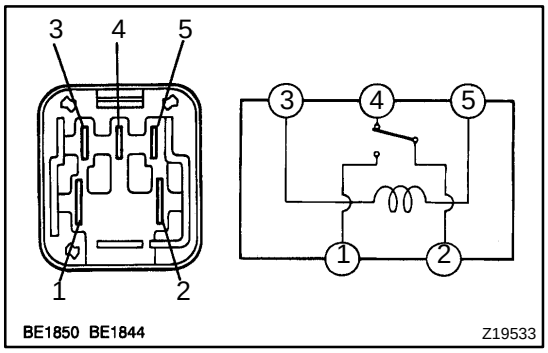

3. INSPECT HEATER MAIN RELAY (Marking: HEATER) CONTINUITY

Condition	Tester connection	Specified condition
Constant	2 − 4 3 − 5	Continuity
Apply B+ between terminals 3 and 5	1 − 2	Continuity

If continuity is not as specified, replace the relay.

AC0CB−12

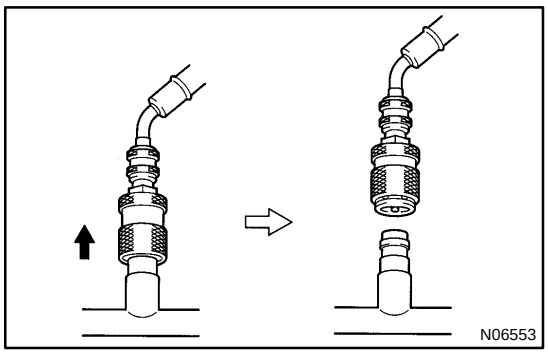

SET OFF

1. CLOSE BOTH VALVES OF MANIFOLD GAUGE SET

2. DISCONNECT QUICK DISCONNECT ADAPTERS FROM SERVICE VALVES ON REFRIGERANT LINE

HINT:

Slide the sleeve of the quick disconnect adapter upward to unlock the adapter and remove it from the service valve.

3. INSTALL CAPS TO SERVICE VALVES ON REFRIGERANT LINE

1GR−FE:

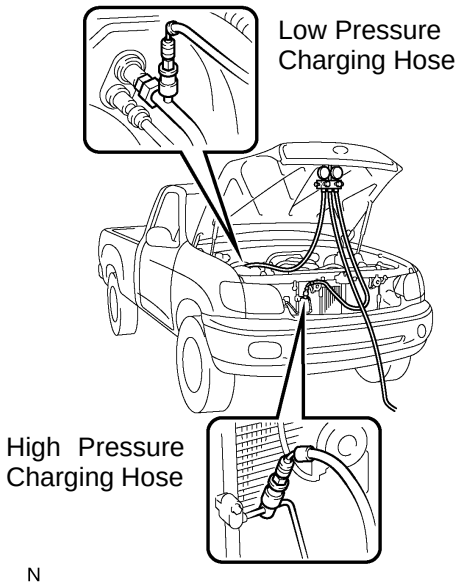

I28849

Access Cab, Standard Cab 2UZ−FE:

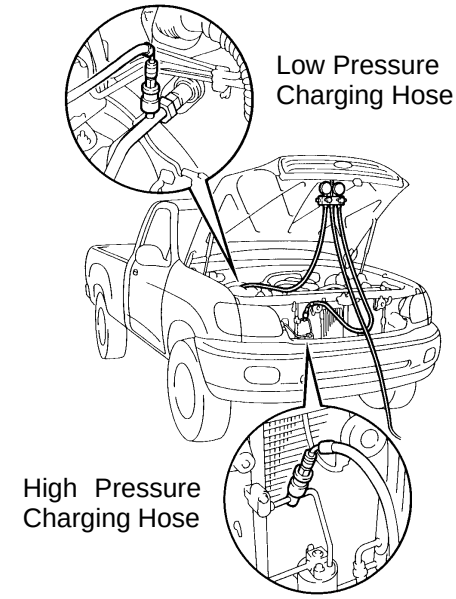

I11119

MANIFOLD GAUGE SET

AC3RQ−02

SET ON

1. CONNECT CHARGE HOSE TO MANIFOLD GAUGE SET

Tighten the nuts by hand.

CAUTION:

Do not connect the wrong hoses.

2. CONNECT QUICK DISCONNECT ADAPTERS TO CHARGING HOSES

Tighten the nuts by hand.

3. CLOSE BOTH VALVES OF MANIFOLD GAUGE SET

4. REMOVE CAPS FROM SERVICE VALVES ON REFRIGERANT LINE

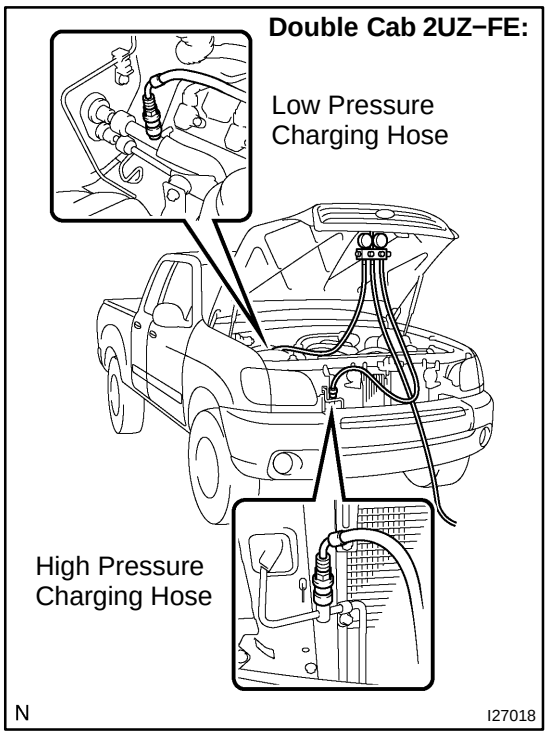

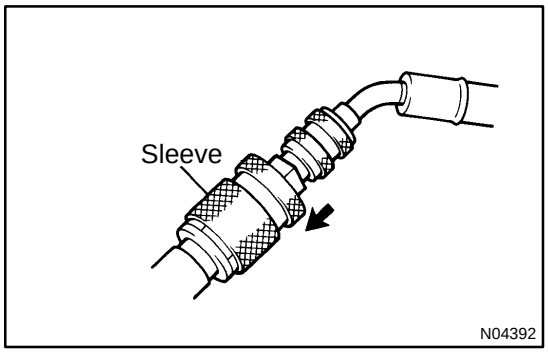

5. CONNECT QUICK DISCONNECT ADAPTERS TO SERVICE VALVES

HINT:

Push the quick disconnect adapter onto the service valve, then slide. Slide the sleeve of the quick disconnect adapter downward to lock it.

AC0E9−03

INSTALLATION

The installation procedures are the removal procedures in reverse order (see page AC−80).

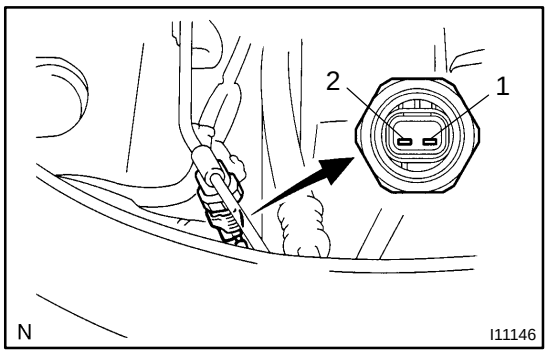

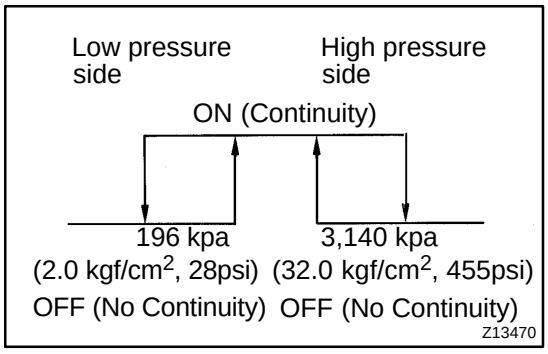

PRESSURE SWITCH

AC0E7−05

ON−VEHICLE INSPECTION

1. **SET MANIFOLD GAUGE SET (See page AC−20)**
2. **DISCONNECT CONNECTOR**
3. **RUN ENGINE AT APPROX. 2,000 rpm**
4. **SET BLOWER SPEED CONTROL SWITCH TO ”HI” POSITION**
5. **SET TEMPERATURE CONTROL LEVER TO ”MAX. COOL” POSITION**
6. **A/C SWITCH ON**
7. **INSPECT PRESSURE SWITCH OPERATION**

(a) Connect the positive (+) lead from the ohmmeter to terminal 1 and the negative (−) lead to terminal 2.

(b) Check continuity between terminals when refrigerant pressure is changed, as shown in the illustration.

If operation is not as specified, replace the pressure switch.

AC0E8−09

REMOVAL

1. DISCHARGE REFRIGERANT FROM REFRIGERATION SYSTEM

HINT:

At the time of installation, refer to the following:

- Evacuate sir from the refrigeration system.
- Charge the system with refrigerant and inspect for leakage of refrigerant.
  Specified amount:
  Access cab, Standard cab:
  600 ± 50 g (21.16 ± 1.76 oz.)
  Double cab: 530 ± 50 g (18.69 ± 1.76 oz.)

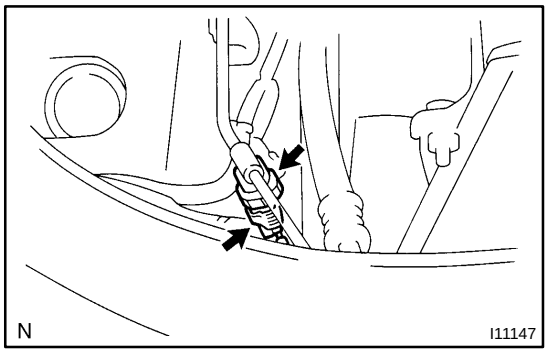

2. REMOVE PRESSURE SWITCH FROM LIQUID TUBE

Disconnect the connector and remove the pressure switch.

Torque: 10 N·m (100 kgf·cm, 7 ft·lbf)

HINT:

- Being careful not to deform the tube, lock the switch mounted on the tube with an open end wrench, and remove the switch.
- At the time of installation, refer to the following:
  Lubricate a new O−ring with the compressor oil and install it to the switch.

AC278−02

INSTALLATION

The installation procedures are the removal procedures in reverse order (see page AC−68).

RECEIVER

AC276−01

ON−VEHICLE INSPECTION

INSPECT FITTINGS FOR LEAKAGE

Using a gas leak detector, check for leakage.

If there is leakage, check the tightening toque at the joints.

AC277−03

REMOVAL

1. DISCHARGE REFRIGERANT FROM REFRIGERATION SYSTEM

HINT:

At the time of the installation, refer to the following:

- Evacuate air from the refrigeration system.
- Charge the system with refrigerant and inspect for leakage of refrigerant.

  Specified amount:

  Access cab, Standard cab:

  600 ± 50 g (21.16 ± 1.76 oz.)

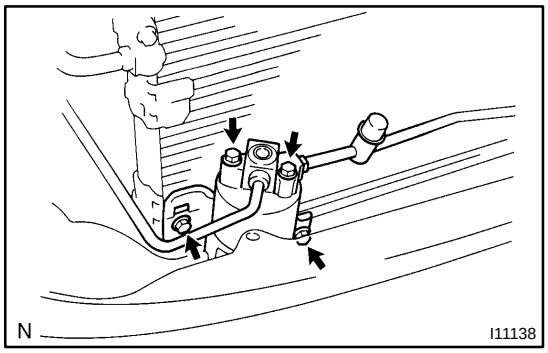

2. DISCONNECT 2 LIQUID TUBES FROM RECEIVER

Remove the 2 bolts and disconnect both tubes.

Torque: 5.4 N·m (55 kgf·cm, 48 in.·lbf)

NOTICE:

Cap the openings immediately to keep moisture or dirt out of the system.

HINT:

At the time of the installation, refer to the following:

Lubricate 2 new O−rings with compressor oil and install them to the tubes.

3. REMOVE RECEIVER

(a) Remove the holder bolt and pull the receiver downward.

HINT:

At the time of the installation, refer to the following:

If the receiver is replaced, add compressor oil to the compressor.

Add 20 cc (0.71 fl.oz.)

Compressor oil: ND−OIL 8 or equivalent

(b) Remove the bolt and holder.

AC3RR−02

LOCATION

1GR−FE:

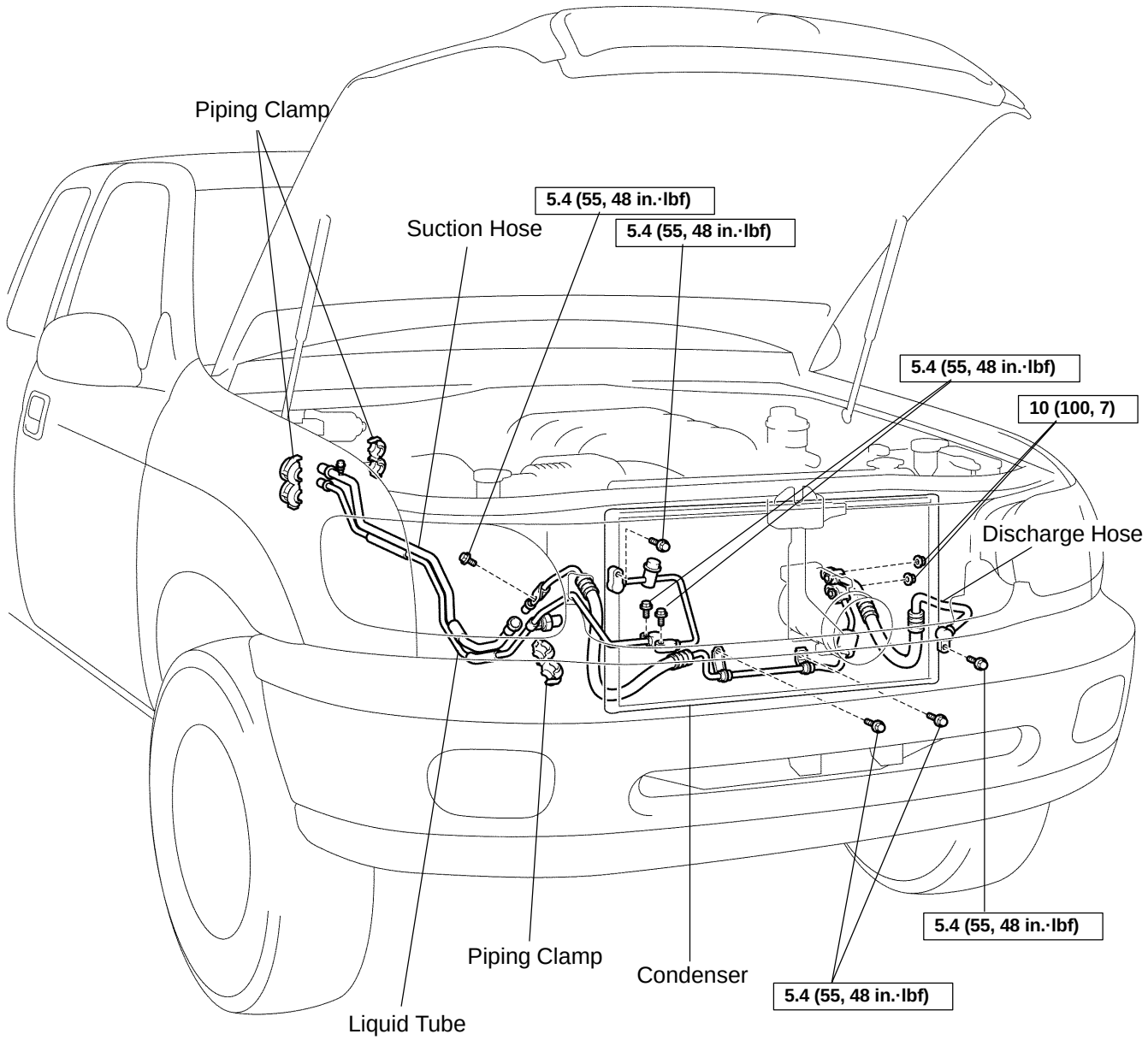

N·m (kgf·cm, ft·lbf) : Specified torque

P

I28831

Access Cab, Standard Cab 2UZ−FE:

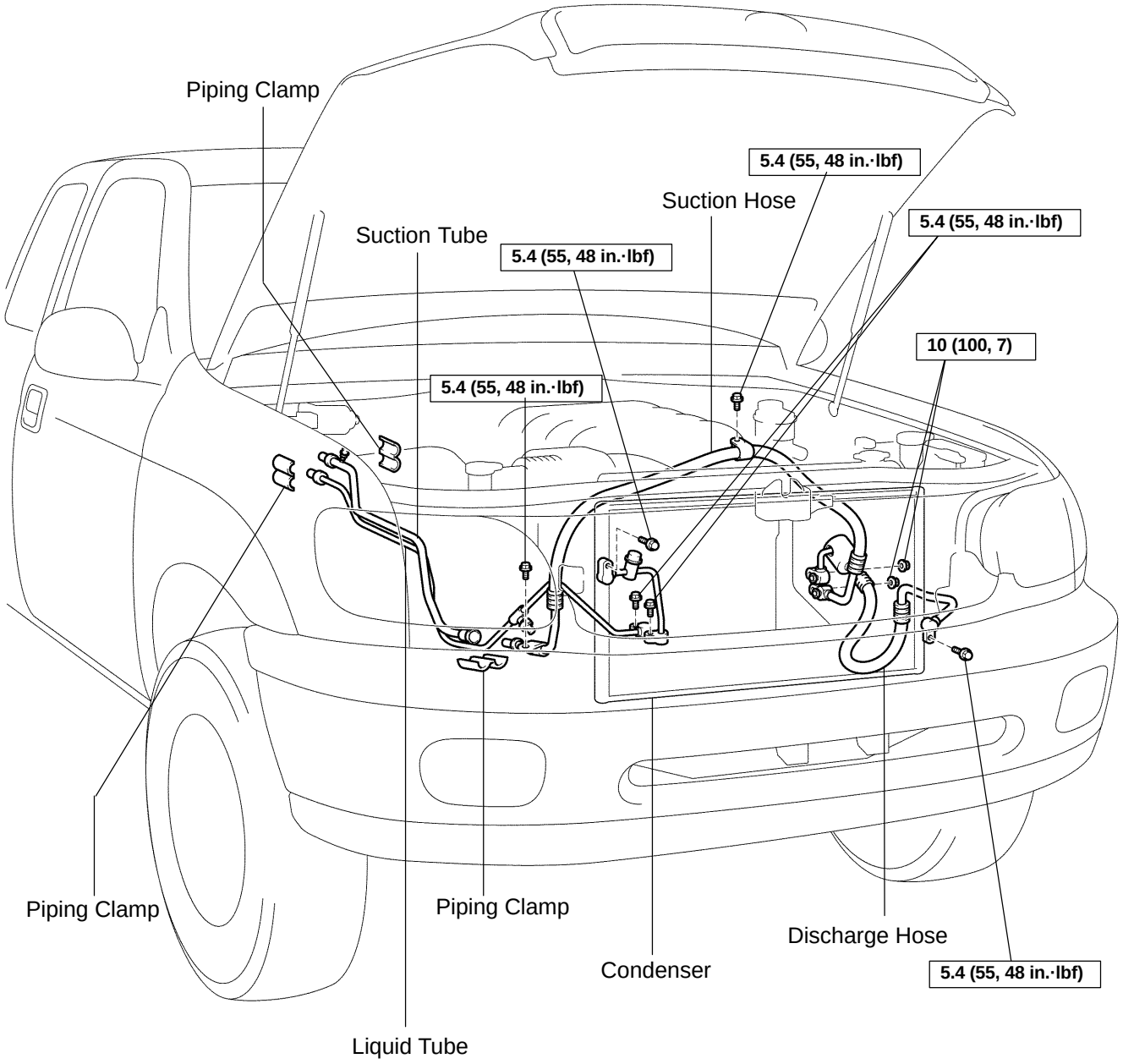

N·m (kgf·cm, ft·lbf) : Specified torque

P

I28071

Double Cab:

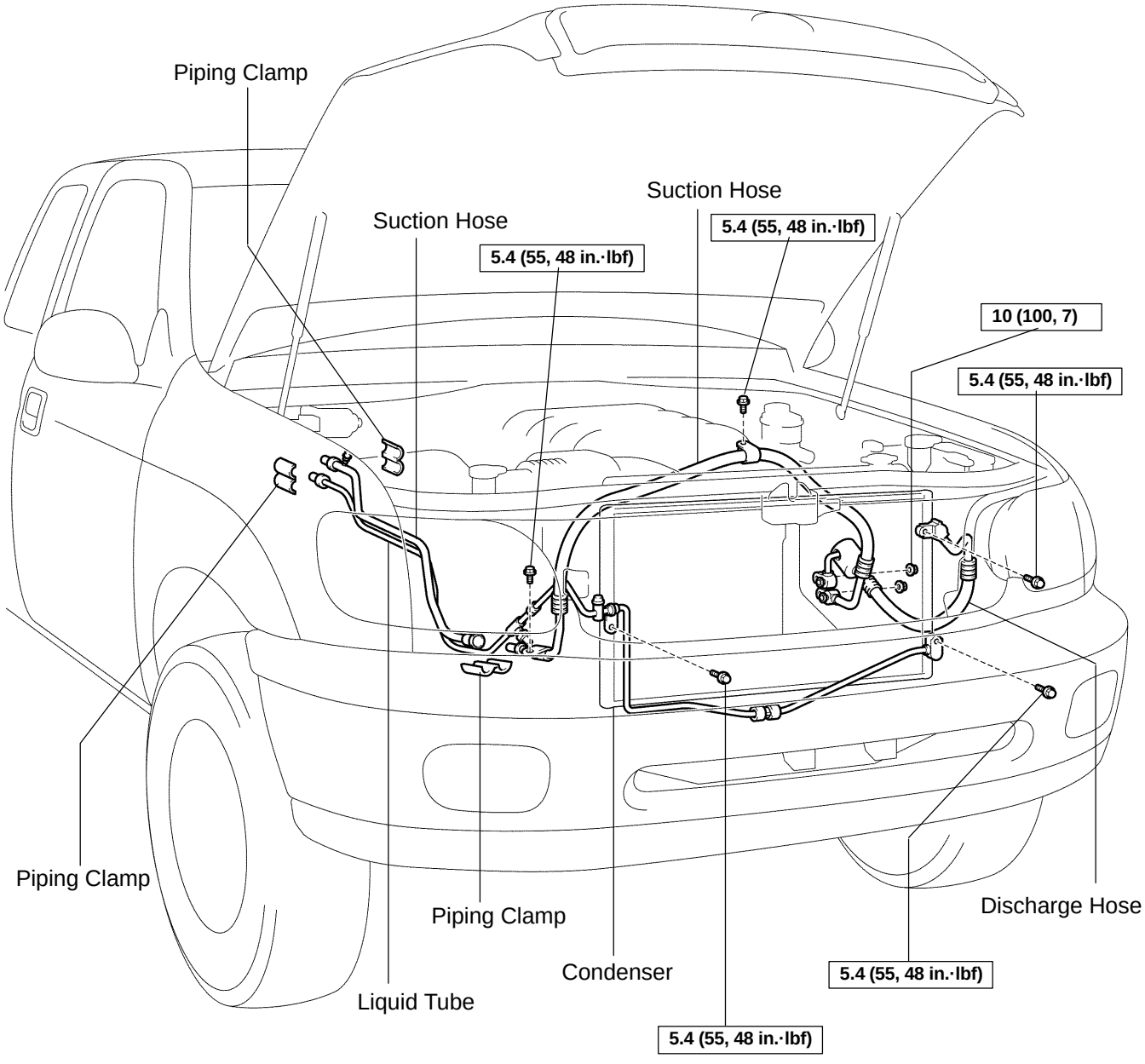

N·m (kgf·cm, ft·lbf) : Specified torque

P

I27017

REFRIGERANT LINE

AC0CC−03

ON−VEHICLE INSPECTION

1. INSPECT HOSE AND TUBE CONNECTIONS FOR LOOSENESS

2. INSPECT HOSES AND TUBES FOR LEAKAGE

Using a gas leak detector, check for leakage of refrigerant.

AC0CE−08

REPLACEMENT

1. DISCHARGE REFRIGERANT FROM REFRIGERATION SYSTEM

2. REPLACE FAULTY TUBE OR HOSE

NOTICE:

Cap the openings immediately to keep moisture or dirt out of the system.

3. TIGHTEN JOINT OF BOLT OR NUT TO SPECIFIED TORQUE

NOTICE:

Do not exceed specified torque.

Part tightened	N·m	kgf·cm	ft·lbf
Receiver x Liquid tube	5.4	55	48 in.·lbf
Condenser x Discharge hose	5.4	55	48 in.·lbf
Condenser x Liquid tube	5.4	100	48 in.·lbf
Compressor x Discharge hose	10	100	7
Compressor x Suction hose	10	100	7
Expansion valve x Evaporator	5.4	55	48 in.·lbf

4. EVACUATE AIR IN REFRIGERATION SYSTEM AND CHARGE SYSTEM WITH REFRIGERANT

Specified amount:

Access cab, Standard cab: 600 ± 50 g (21.16 ± 1.76 oz.)

Double cab: 530 ± 50 g (18.69 ± 1.76 oz.)

5. INSPECT FOR LEAKAGE OF REFRIGERANT

Using a gas leak detector, check for leakage of refrigerant.

6. INSPECT AIR CONDITIONING OPERATION

TROUBLESHOOTING

PROBLEM SYMPTOMS TABLE

AC22H−05

Use the table below to help find the cause of the problem. The numbers indicate the priority of the likely cause of the problem. Check each part in order. If necessary, replace these parts.

Symptom	Suspected Area		See page
No blower operation	1. HTR Fuse		−
	2. Heater main relay		AC−82
	3. Blower motor		AC−77
	4. Blower resistor		AC−78
	5. Blower speed control switch		AC−103
	6. Wire harness		−
No air temperature control	1. Engine coolant volume		−
	2. Heater control assembly		AC−99
	3. Water valve		AC−74
No compressor operation	1. Refrigerant volume		AC−3
	2. A.C Fuse		−
	3. Magnetic clutch	1GR−FE:	AC−52
		2UZ−FE:	AC−59
	4. Compressor	1GR−FE:	AC−52
		2UZ−FE:	AC−59
	5. Pressure switch		AC−79
	6. Heater main relay		AC−82
	7. Blower speed control switch		AC−103
	8. A/C switch		AC−92
	9. Integration control and panel		AC−83
	10.Thermistor		AC−28
	11.Wire harness		−
Compressor operates intermittently	1. Refrigerant volume		AC−3
	2. Pressure switch		AC−79
	3. A/C switch		AC−92
	4. Thermistor		AC−28
	5. Wire harness		−
No cool air comes out	1. Refrigerant volume		AC−3
	2. Refrigerant pressure		AC−3
	3. Drive belt		AC−17
	4. Magnetic clutch	1GR−FE:	AC−52
		2UZ−FE:	AC−59
	5. Compressor	1GR−FE:	AC−52
		2UZ−FE:	AC−59
	6. Pressure switch		AC−79
	7. Thermistor		AC−28
	8. A/C switch		AC−92
	9. Integration control and panel		AC−83
	10.Heater control assembly		AC−99
	11.Wire harness		−

Cool air comes out only at high engine rpm	1. Refrigerant volume		AC−3
	2. Drive belt		AC−17
	3. Magnetic clutch	1GR−FE:	AC−52
		2UZ−FE:	AC−59
	4. Compressor	1GR−FE:	AC−52
		2UZ−FE:	AC−59
	5. Condenser		AC−70
	6. Receiver		AC−67
	7. Expansion valve		AC−28
	8. Evaporator		AC−34
	9. Thermistor		AC−28
	10.A/C switch		AC−92
	11.Wire harness		−
Insufficient cooling	1. Refrigerant volume		AC−3
	2. Drive belt		AC−17
	3. Magnetic clutch	1GR−FE:	AC−52
		2UZ−FE:	AC−59
	4. Compressor	1GR−FE:	AC−52
		2UZ−FE:	AC−59
	5. Condenser		AC−70
	6. Receiver		AC−67
	7. Expansion valve		AC−28
	8. Evaporator		AC−34
	9. Refrigerant lines		AC−23
	10.Pressure switch		AC−79
	11.Integration control and panel		AC−83
	12.Heater control assembly		AC−99
No engine idle−up with A/C switch ON	1. Integration control and panel		AC−83
	2. Idle control system	1GR−FE:	DI−266
		2UZ−FE:	DI−712
	3. Wire harness		−
*2A/C indicator blinks	1. Compressor	1GR−FE:	AC−52
		2UZ−FE:	AC−59
	2. Drive belt		AC−17
	3. Compressor lock sensor	1GR−FE:	AC−52
		2UZ−FE:	AC−59
	4. A/C amplifier		AC−83
No warm air comes out	1. Engine coolant volume		−
	2. Heater control assembly		AC−99
	3. Water valve		AC−74
	4. Heater radiator		AC−42

AC27C−02

INSTALLATION

The installation procedures are the removal procedures in reverse order (see page AC−75).

WATER VALVE

AC27A−02

ON−VEHICLE INSPECTION

1. WARM UP ENGINE

2. DISCONNECT WATER VALVE CONTROL CABLE

3. INSPECT WATER VALVE OPERATION

(a) Check that warm air comes out from the vent when the water valve lever is moved to the ”WARM” position.

(b) Check that cool air comes out when the water valve is moved to the ”COOL” position.

If operation is not as specified, replace the water valve.

4. CONNECT WATER VALVE CONTROL CABLE

AC27B−03

REMOVAL

1. DRAIN ENGINE COOLANT FROM RADIATOR

HINT:

It is not necessary to drain out all the coolant.

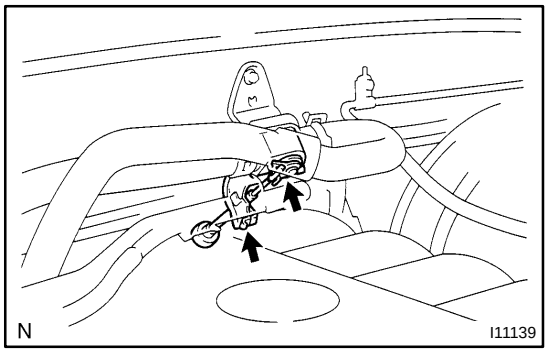

2. DISCONNECT WATER VALVE CONTROL CABLE FROM WATER VALVE

HINT:

At the time of installation, refer to the following:

After connection, adjust the control cable (See page AC−105).

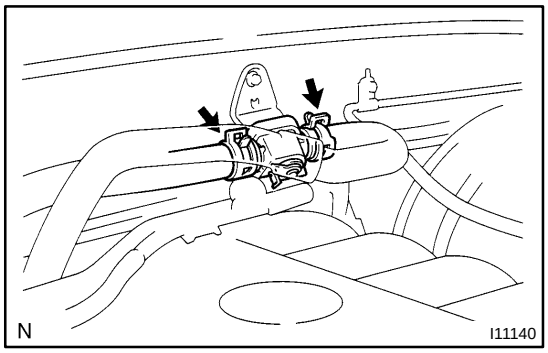

3. DISCONNECT WATER HOSES

(a) Using pliers, grip the claws of the hose clips and slide the hose clips along the hoses.

(b) Disconnect the water hoses.

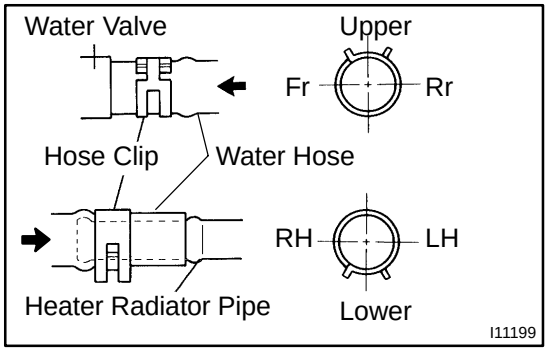

HINT:

At the time of installation, refer to the following:

- Heater radiator pipe:
  Push the water hose onto the heater radiator pipe up to the second ridge on the pipe.
- Water valve:
  Push the water hose onto the water valve pipe up to the water valve.
- Install the hose clip in the position shown in the illustration.

4. REMOVE WATER VALVE

Remove the bolt and water valve.

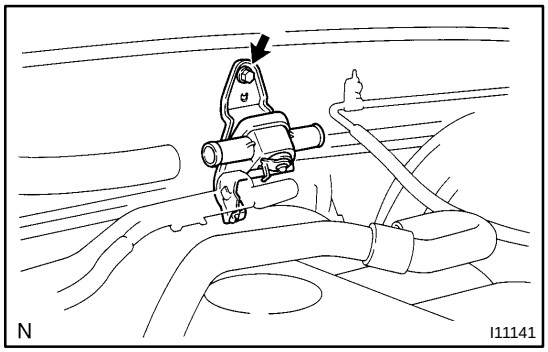

AIR COOLED OIL COOLER (Towing Package Spec.)

AT13R−01

COMPONENTS

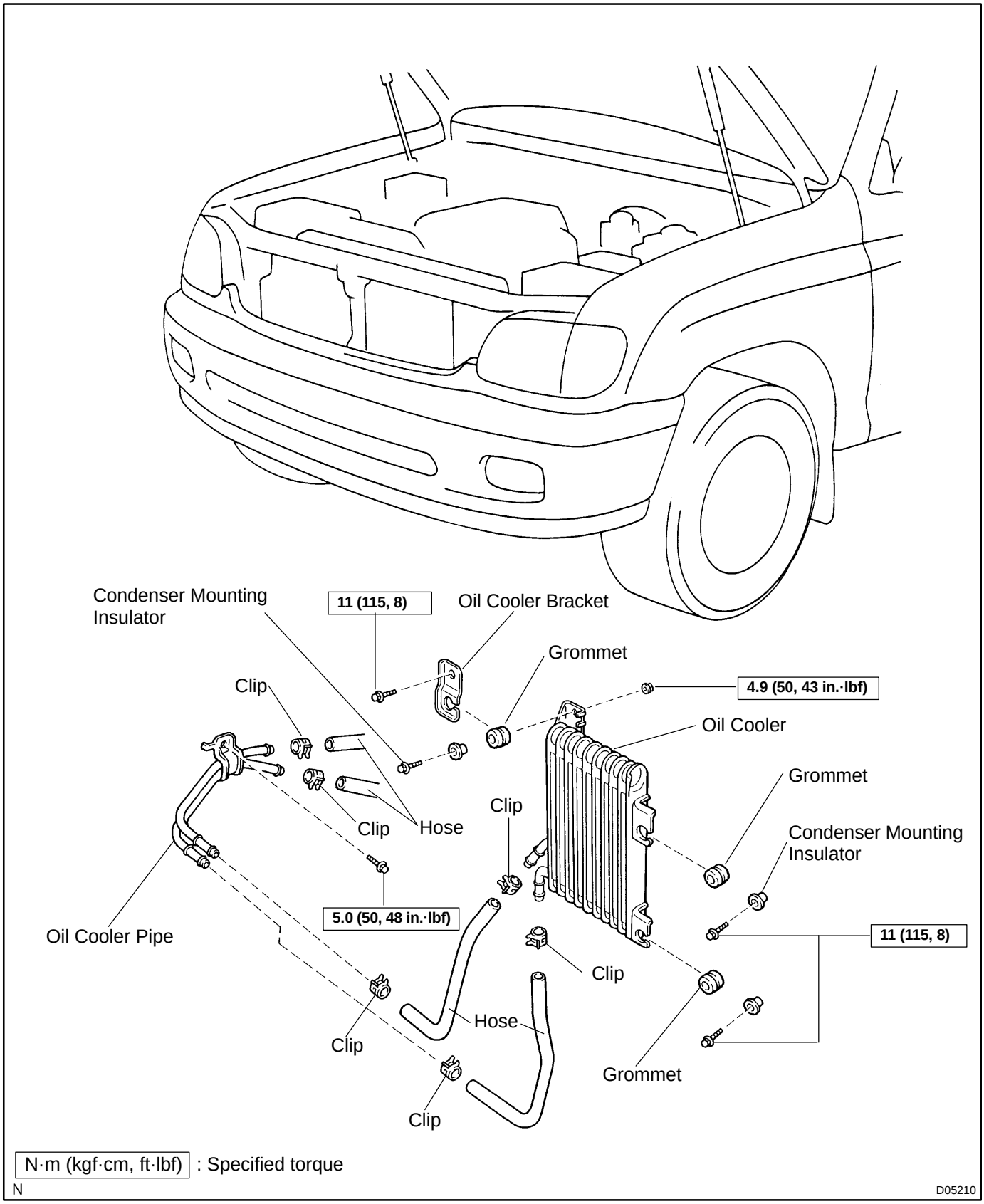

AT13T−01

INSTALLATION

Installation is in the reverse order of removal (See page AT−17).

HINT:

After installation, check fluid level (See page AT−4).

AT13S−01

REMOVAL

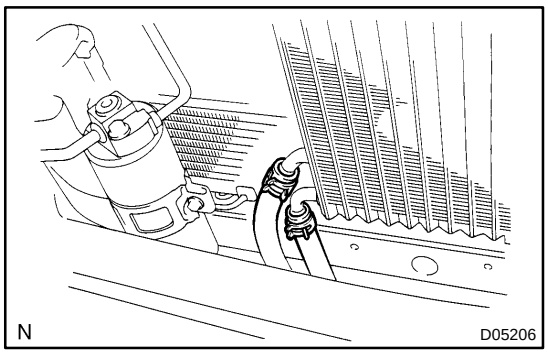

1. REMOVE PIPE

Loosen the 2 clips and disconnect the 2 hoses.

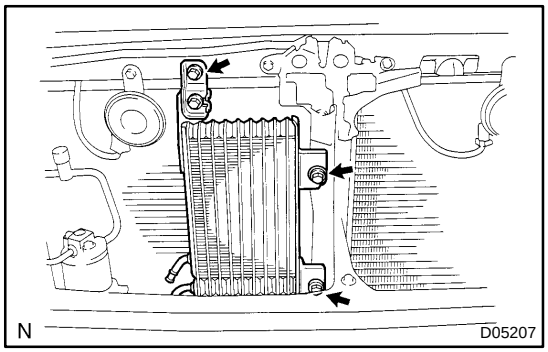

2. REMOVE OIL COOLER

(a) Remove the 3 bolts and oil cooler.
Torque: 11 N·m (115 kgf·cm, 8 ft·lbf)

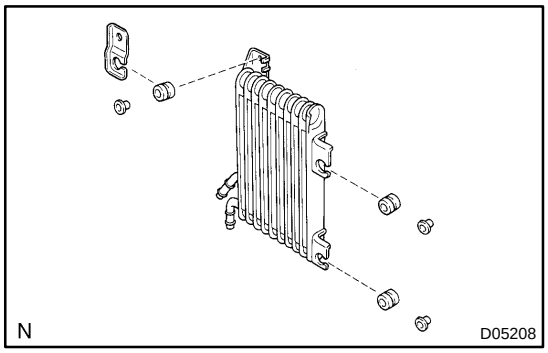

(b) Remove the bolt, transmission oil cooler bracket and grommet.
Torque: 4.9 N·m (50 kgf·cm, 43 in.·lbf)

(c) Remove the 2 grommets and condenser mounting insulators.

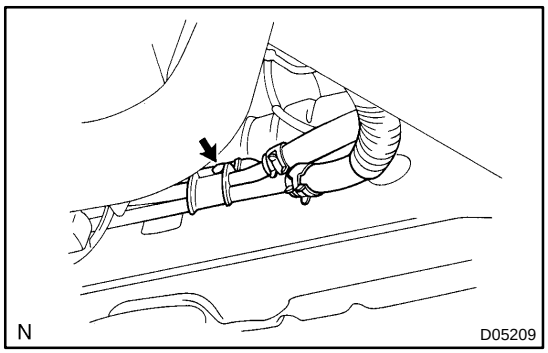

3. REMOVE OIL COOLER TUBE

(a) Loosen the 2 clips and disconnect the 2 hoses.
(b) Remove the bolt and oil cooler tube with the 2 hoses.
Torque: 5.0 N·m (50 kgf·cm, 48 in.·lbf)
(c) Loosen the 2 clips and disconnect the 2 hoses.

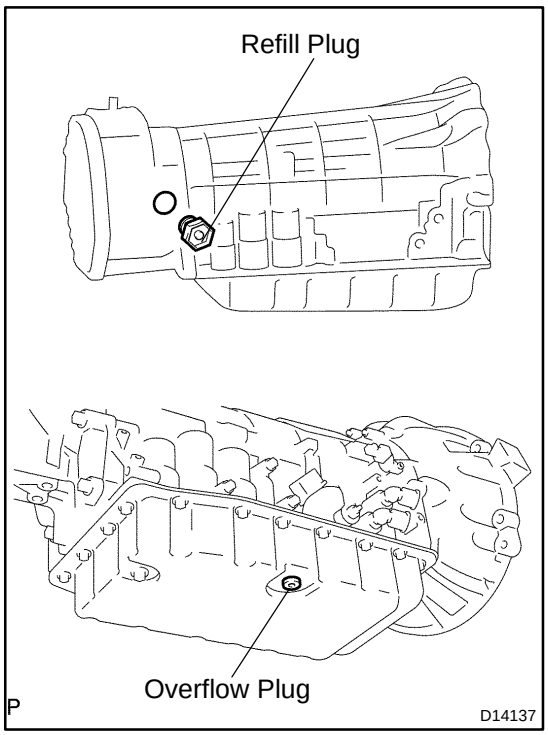

AUTOMATIC TRANSMISSION FLUID

ADJUSTMENT

AT145−01

1. BEFORE TRANSMISSION FILL

- This transmission requires Toyota Genuine ATF WS transmission fluid.
- After servicing the transmission, you must refill the transmission with the correct amount of fluid.
- Maintain the vehicle in a horizontal position while adjusting fluid level.
- On vehicles equipped with active suspension, turn the suspension control switch OFF if you jack up the vehicle while the engine is running.
- Proceed to step 2 if you replaced the entire transmission, transmission pan, drain plug, valve body and/or torque converter.
- Proceed to step 3 after removing the refill plug if you replaced the transmission hose and/or output shaft oil seal.

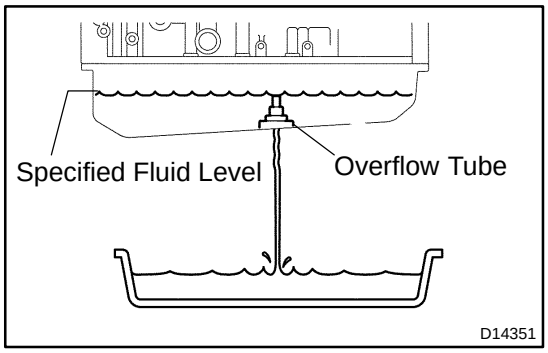

2. TRANSMISSION PAN FILL

(a) Remove the refill plug and overflow plug.

(b) Fill the transmission through the refill hole until fluid begins to trickle out of the overflow tube.

(c) Reinstall the overflow plug.

3. TRANSMISSION FILL

(a) Fill the transmission with the correct amount of fluid as listed in the table below.

(b) Reinstall the refill plug to avoid fluid splash.

Repair	Fill Amount
Transmission hose and pipe removal	0.6 L (0.63 US qts, 0.53 Imp qts)
Output shaft oil seal replacement	0.4 L (0.42 US qts, 0.35 Imp qts)
Transmission pan and drain plug removal	1.3 L (1.37 US qts, 1.14 Imp qts)
Transmission valve body removal	3.9 L (4.12 US qts, 3.43 Imp qts)
Torque converter removal	5.3 L (5.60 US qts, 4.66 Imp qts)
Entire transmission assembly	7.2 L (7.61 US qts, 6.34 Imp qts)

HINT:

If you cannot add the listed amount of fluid, do the following:

- Install the refill plug.
- Allow the engine to idle with the air conditioning OFF.
- Move the shift lever through entire gear range to circulate fluid.
- Wait for 30 seconds with the engine idling.
- Stop the engine.
- Remove the refill plug and add fluid.
- Reinstall the refill plug.

4. FLUID CIRCULATION

(a) Allow the engine to idle with the air conditioning OFF.

(b) Move the shift lever through entire gear range to circulate fluid.

5. FLUID TEMPERATURE CHECK

(a) With hand−held tester

(1) Connect the hand−held tester to the DLC3.

(2) Select the tester menus: OBD/MOBD, ENGINE, DATA LIST and A/T.

(3) Check A/T OIL TEMP.

(4) Allow the engine to idle until the fluid temperature reaches 46°C (115°F).

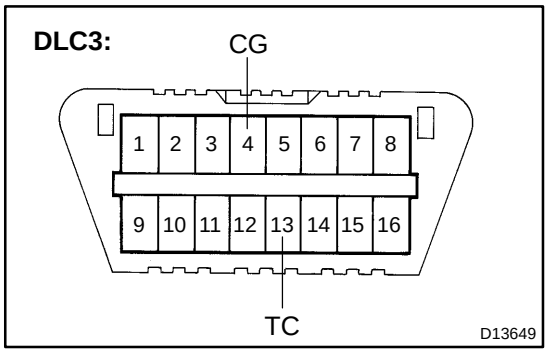

(b) Without hand−held tester (Using A/T OIL TEMP indicator)

(1) Create a short circuit between CG (4) and TC (13) of the DLC3 terminals using SST.

SST 09843−18040

(2) Move the shift lever back and forth between N and D at 1.5 seconds interval for six seconds.

(3) The A/T OIL TEMP indicator comes on for two seconds when the combination meter starts to detect the fluid temperature.

(4) The A/T OIL TEMP indicator comes on again when the fluid temperature reaches 46°C (115°F) and blinks when it exceeds 56°C (130°F).

(5) Allow the engine to idle until the fluid temperature reaches 46°C (115°F).

HINT:

The fluid temperature should be less than 30°C (86°F) before check the fluid temperature.

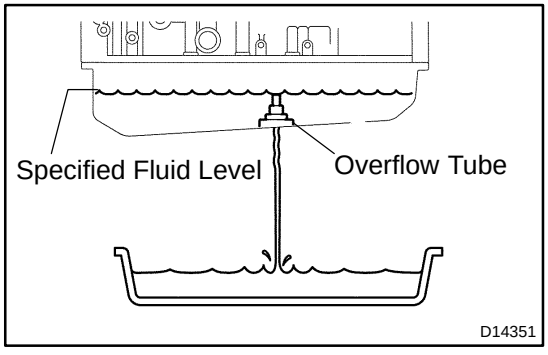

6. FLUID LEVEL CHECK

NOTICE:

The fluid temperature must be between 46°C (115°F) and 56°C (130°F) to check the fluid level.

(a) Remove the overflow plug with the engine idling.

(b) Check that the fluid comes out of the overflow tube.

If fluid does not come out, proceed to step 7.

If fluid comes out, wait until the over−flow slows to a trickle and proceed to step 8.

7. TRANSMISSION REFILL

(a) Install the overflow plug.
(b) Stop the engine.
(c) Remove the refill plug.
(d) Add 0.4 liters (0.42 US qts, 0.35 lmp qts) of fluid.
(e) Allow the engine to idle and wait for 10 seconds.
(f) Proceed to step 6.

8. COMPLETE

(a) Install the overflow plug with a new gasket.
Torque: 20 N·m (205 kgf·cm, 15 ft·lbf)
(b) Stop the engine.
(c) Install the refill plug with a new gasket.
Torque: 39 N·m (400 kgf·cm, 29 ft·lbf)

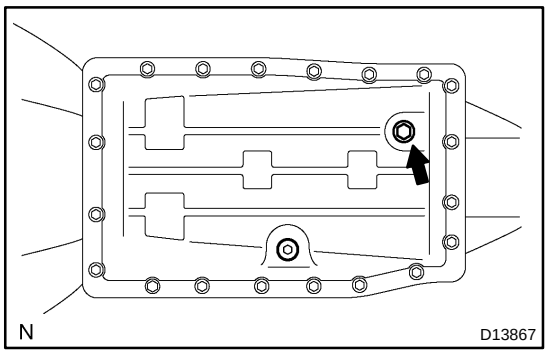

ATF TEMPERATURE SENSOR

AT13N−01

ON−VEHICLE REPAIR

1. DRAIN AUTOMATIC TRANSMISSION FLUID

(a) Remove the drain plug and gasket, and drain the ATF.

(b) Install a new gasket and the drain plug.

Torque: 20 N·m (204 kgf·cm, 15 ft·lbf)

2. REMOVE OIL PAN (See page AT−12)

3. REMOVE OIL STRAINER (See page AT−12)

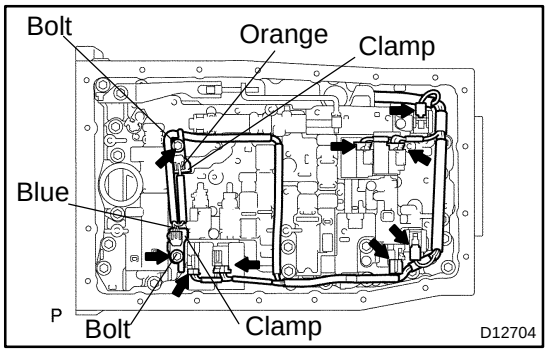

4. REMOVE ATF TEMPERATURE SENSOR

(a) Disconnect the 7 solenoid valve connectors.

(b) Remove the 2 bolts, clamps and ATF temperature sensors.

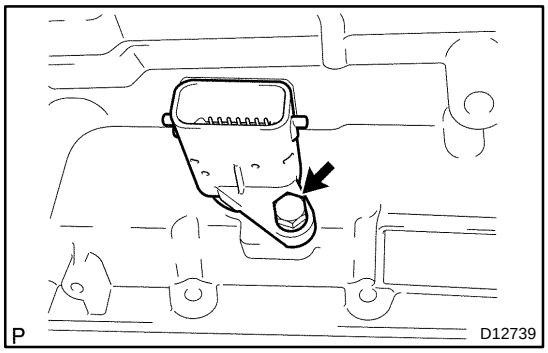

(c) Disconnect the transmission wire connector.

(d) Remove the bolt and the transmission wire harness.

5. INSTALL ATF TEMPERATURE SENSOR

(a) Install the transmission wire harness.

(b) Install the bolt.

Torque: 5.4 N·m (55 kgf·cm, 48 in.·lbf)

(c) Connect the transmission wire connector.

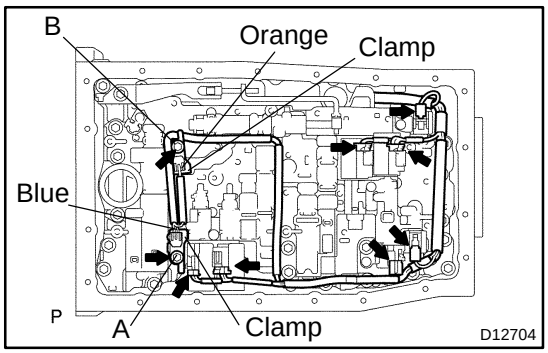

(d) Connect the 7 solenoid valve connectors.

(e) Install the 2 ATF temperature sensors and clamps to the valve body with the 2 bolts.

HINT:

In order to install the ATF temperature sensors properly, check the wire harness color prior to installation.

Torque:

A: 11 N·m (112 kgf·cm, 8 ft·lbf)

B: 10 N·m (100 kgf·cm, 7 ft·lbf)

Bolt length:

Bolt A: 36 mm (1.42 in.)

Bolt B: 12 mm (0.47 in.)

Sensor wire harness:

Wire harness	Color
for linear control	Orange
for oil temp. warning lamp	Blue

6. INSTALL OIL STRAINER (See page AT−12)

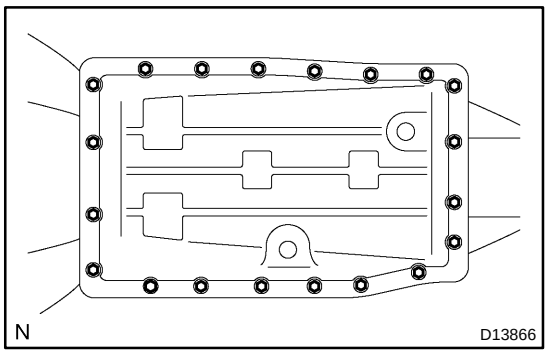

7. INSTALL OIL PAN

HINT:

Remove any packing material, and be careful not to spill oil on the contacting surfaces of the transmission case and the oil pan.

Using a new gasket, install the oil pan with the 20 bolts.

Torque: 4.4 N·m (45 kgf·cm, 39 in·lbf)

8. FILL TRANSMISSION (See page AT−4)

AT13K−01

OPERATION

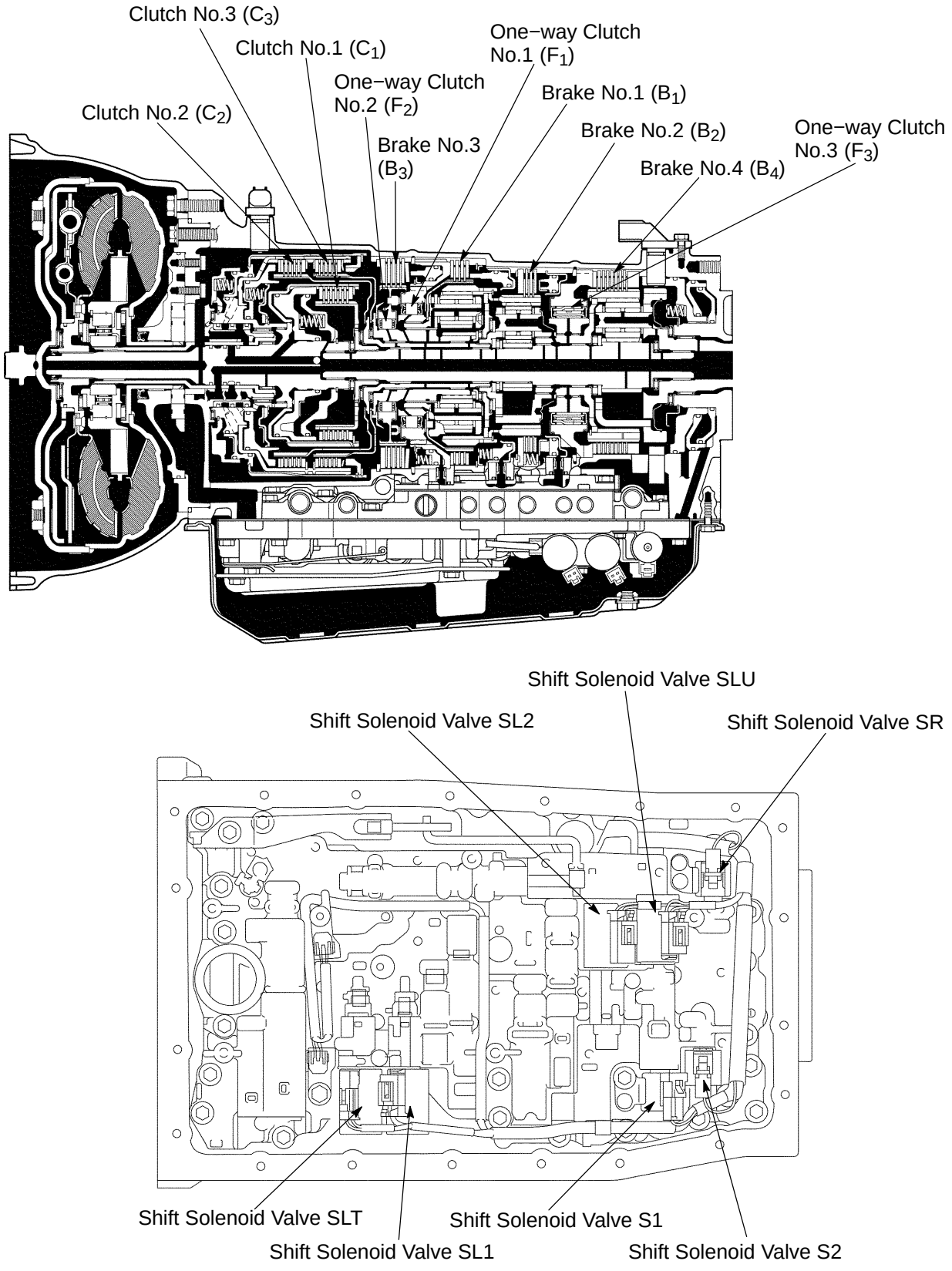

P

D14123

Shift Lever Position	Gear Position	S1	S2	SR	SL1	SL2	SLU	C_1	C_2	C_3	B_1	B_2	B_3	B_4	F_1	F_2	F_3
P	Park	○	×	×	×	○	×	×	×	×	×	×	×	×	×	×	×
R	Reverse	○	×	×	×	○	×	×	×	○	○	×	×	○	○	×	×
N	Neutral	○	×	×	×	○	×	×	×	×	×	×	×	×	×	×	×
D	1st	○	×	×	×	○	×	○	×	×	×	×	×	×	×	×	○
	2nd	○	○	×	×	○	×	○	×	×	×	×	○	×	○	○	×
	3rd	×	○	×	×	○	×	○	×	○	×	×	○	×	○	×	×
	4th	×	×	×	×	○	○	○	○	○	×	×	○	×	×	×	×
	5th	×	×	○	○	×	○	×	○	○	○	×	○	×	×	×	×
D (O/D OFF)	1st	○	×	×	×	○	×	○	×	×	×	×	×	×	×	×	○
	2nd	○	○	×	×	○	×	○	×	×	×	×	○	×	○	○	×
	3rd	×	○	×	×	○	×	○	×	○	×	×	○	×	○	×	×
	4th	×	×	×	×	○	○	○	○	○	×	×	○	×	×	×	×
3	1st	○	×	×	×	○	×	○	×	×	×	×	×	×	×	×	○
	2nd	○	○	×	×	○	×	○	×	×	×	×	○	×	○	○	×
	3rd	×	○	×	×	×	×	○	×	○	○	×	○	×	○	×	×
2	1st	○	×	×	×	○	×	○	×	×	×	×	×	×	×	×	○
	2nd	○	○	○	×	×	×	○	×	×	×	○	○	×	○	○	×
L	1st	○	×	×	×	×	×	○	×	×	×	×	×	○	×	×	○

○ : Operates

F1, F2, F3 : Operates only when driving

AUTOMATIC TRANSMISSION SYSTEM

AT13J−01

PRECAUTION

If the vehicle is equipped with a mobile communication system, refer to the precautions in the IN section.

AUTOMATIC TRANSMISSION UNIT (1GR−FE)

AT13X−01

COMPONENTS

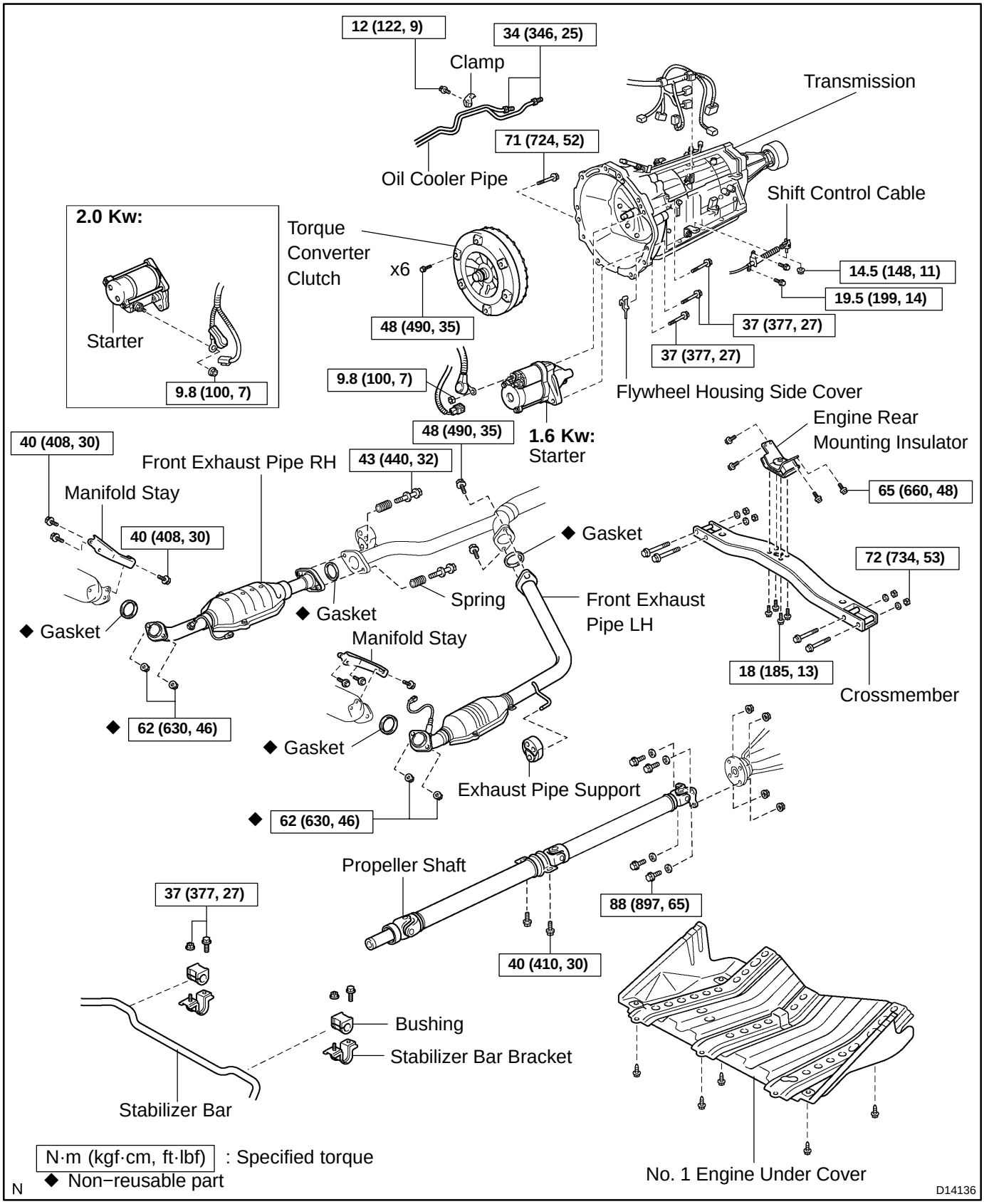

AT13Z−01

INSTALLATION

1. CHECK TORQUE CONVERTER INSTALLATION

(a) Install the torque converter to the transmission housing.

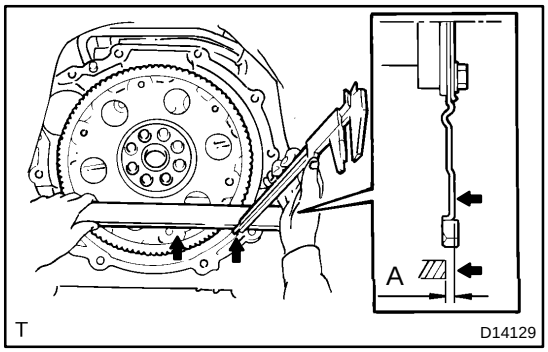

(b) Using vernier calipers and a straight edge, measure dimension A between the transmission fitting part and the converter fitting part of the drive plate.

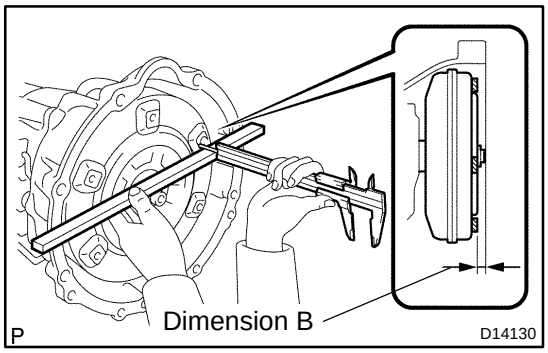

(c) Using vernier calipers and a straight edge, measure dimension B shown in the illustration and check that B is greater than A measured in step (b).

Standard distance: A + 1 mm (0.04 in.) or more

2. MEASURE DRIVE PLATE RUNOUT AND INSPECT RING GEAR (See page AT−39)

3. TRANSMISSION INSTALLATION

(a) Installation is in the reverse order of removal (See page AT−27).

(b) Adjust the shift lever position (See page DI−952).

(c) Fill the transmission (See page AT−4).

(d) Conduct the road test of the vehicle (See page DI−953).

AT13Y−01

REMOVAL

1. **DISCONNECT CABLE FROM NEGATIVE BATTERY TERMINAL**
2. **JACK UP VEHICLE**
3. **REMOVE NO. 1 ENGINE UNDER COVER**

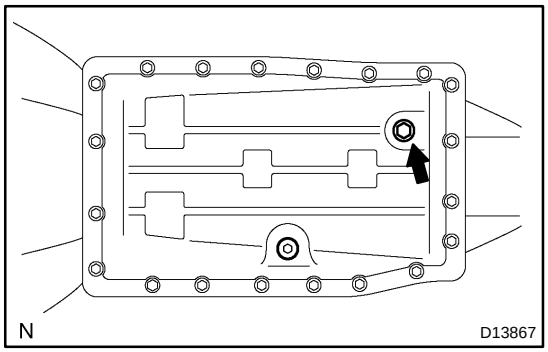

4. **DRAIN AUTOMATIC TRANSMISSION FLUID**

(a) Remove the drain plug and gasket, and drain the ATF.

(b) Install a new gasket and the drain plug.
Torque: 20 N·m (204 kgf·cm, 15 ft·lbf)

5. **REMOVE RH AND LH FRONT EXHAUST PIPE (See page EM−138)**
6. **REMOVE PROPELLER SHAFT (See page PR−3)**

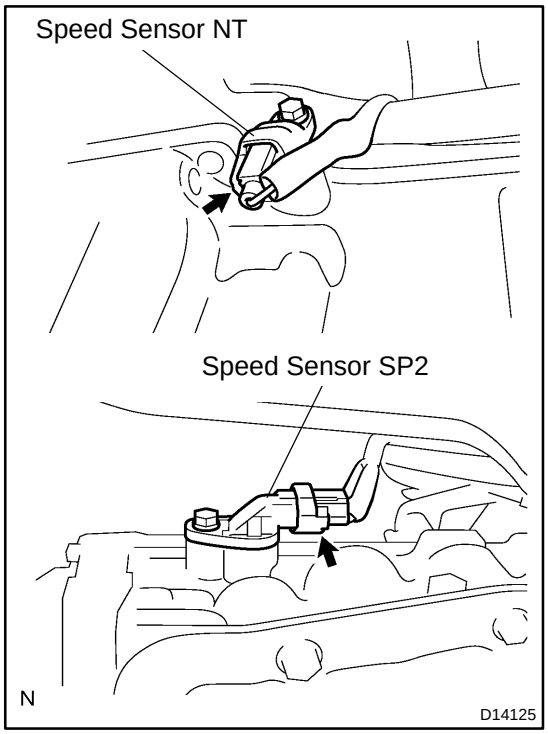

7. **DISCONNECT SPEED SENSOR NT AND SP2 CONNECTORS**

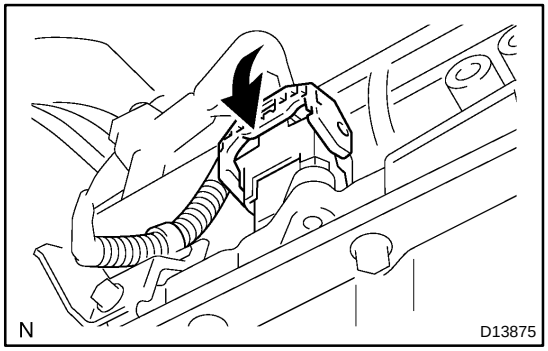

8. **DISCONNECT TRANSMISSION WIRE CONNECTOR**

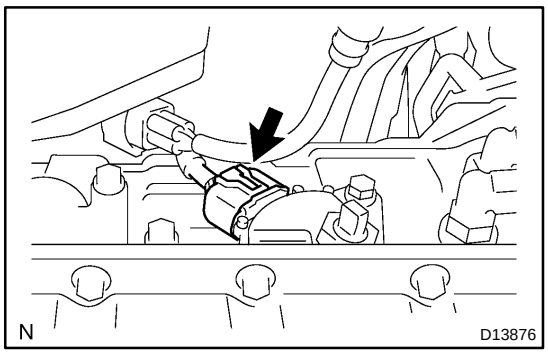

9. DISCONNECT PARK/NEUTRAL POSITION SWITCH CONNECTOR

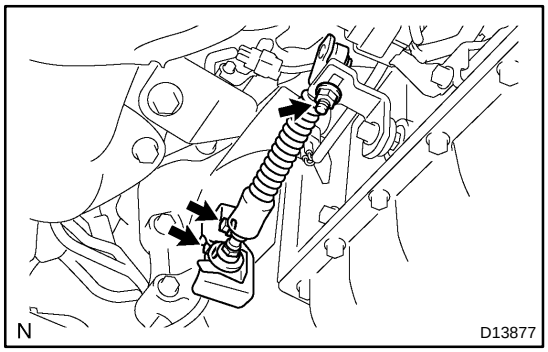

10. SEPARATE SHIFT CONTROL CABLE FROM TRANSMISSION

(a) Remove the nut and disconnect the shift control cable.
Torque: 14.5 N·m (148 kgf·cm, 11 ft·lbf)

(b) Remove the 2 bolts and shift control cable bracket from the transmission.
Torque: 19.5 N·m (199 kgf·cm, 14 ft·lbf)

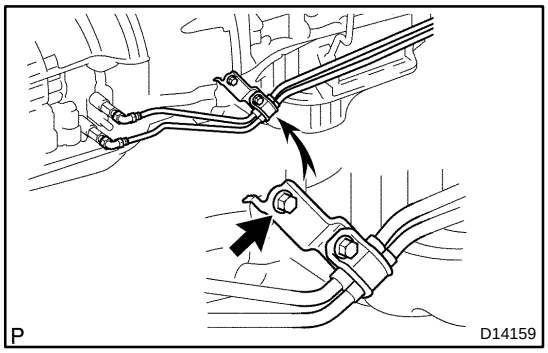

11. DISCONNECT OIL COOLER PIPE

(a) Remove the bolt and clamp.
Torque: 12 N·m (122 kgf·cm, 9 ft·lbf)

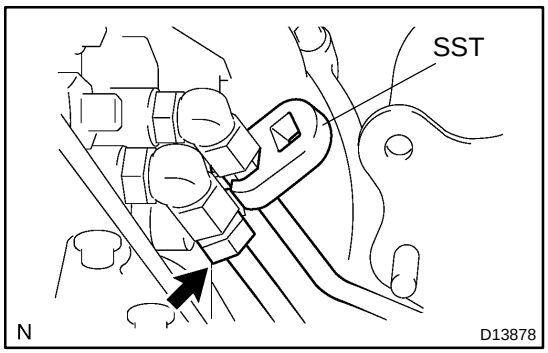

(b) Disconnect the 2 oil cooler pipes.
SST 09023−12701
Torque: 34 N·m (346 kgf·cm, 25 ft·lbf)

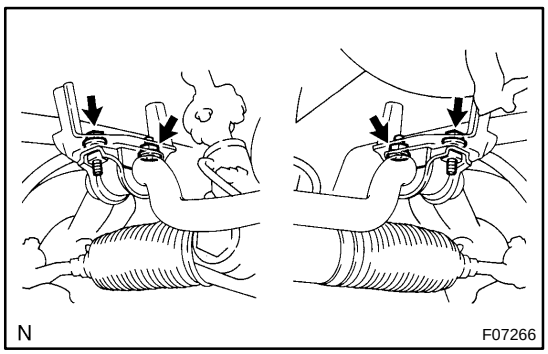

12. DISCONNECT STABILIZER BAR

(a) Remove the 2 bolts, nuts and stabilizer bar with the bushings and brackets.
Torque: 37 N·m (377 kgf·cm, 27 ft·lbf)

(b) Disconnect the stabilizer bar.

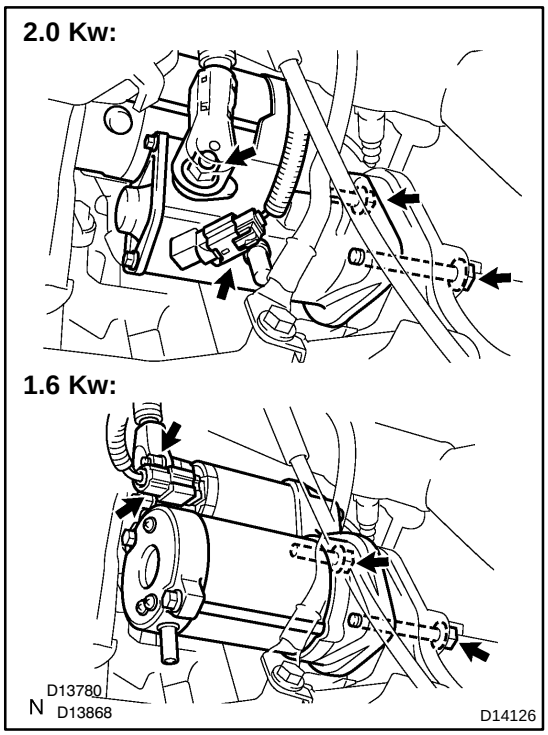

13. REMOVE STARTER

(a) Remove the nut and disconnect the starter wire and connector.
Torque: 9.8 N·m (100 kgf·cm, 7 ft·lbf)

(b) Remove the 2 bolts and starter.
Torque: 37 N·m (377 kgf·cm, 27 ft·lbf)

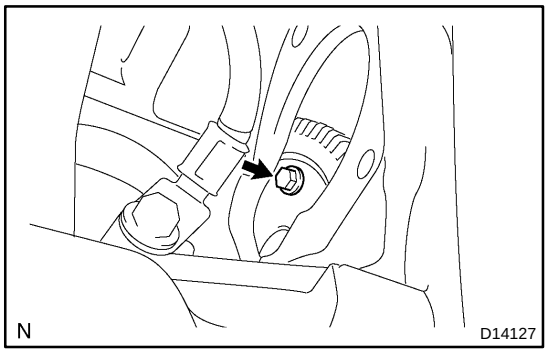

14. REMOVE TORQUE CONVERTER CLUTCH MOUNTING BOLT

(a) Remove the flywheel housing side cover.

(b) Turn the crankshaft to gain access and remove the 6 bolts while holding the crankshaft pulley set bolt with a wrench.
Torque: 48 N·m (490 kgf·cm, 35 ft·lbf)

HINT:
At the time of installation, refer to the following:
First install the green colored bolt and then the remaining 5 bolts.

15. JACK UP TRANSMISSION SLIGHTLY

Securely support the transmission on a transmission jack.
Lift the transmission slightly from the crossmember.

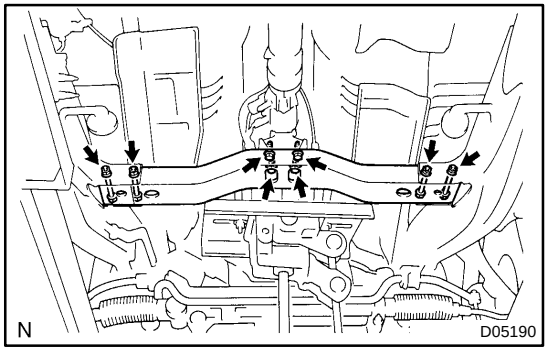

16. REMOVE CROSSMEMBER

(a) Remove the 4 bolts of the engine rear mounting on the crossmember.
Torque: 18 N·m (185 kgf·cm, 13 ft·lbf)

(b) Remove the 4 nuts, bolts, washers and crossmember.
Torque: 72 N·m (734 kgf·cm, 53 ft·lbf)

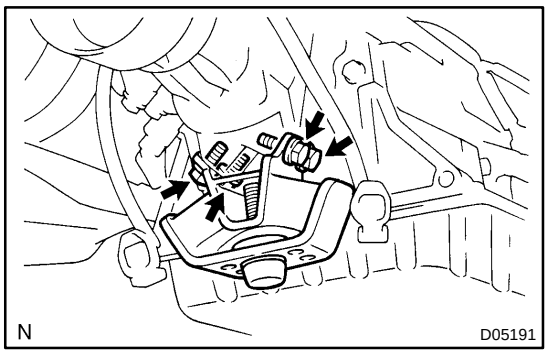

17. REMOVE ENGINE REAR MOUNTING INSULATOR

Remove the 4 bolts and engine rear mounting insulator from the transmission.

Torque: 65 N·m (660 kgf·cm, 48 ft·lbf)

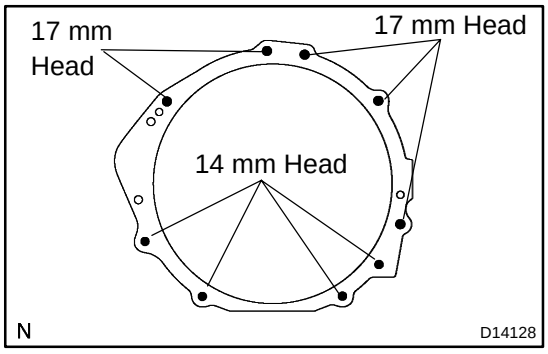

18. REMOVE TRANSMISSION

(a) Separate the wire harness from the transmission.

(b) Lower the rear end of the transmission.

(c) Remove the 9 bolts and transmission.

Torque:

17 mm head: 71 N·m (724 kgf·cm, 52 ft·lbf)

14 mm head: 37 N·m (377 kgf·cm, 27 ft·lbf)

AUTOMATIC TRANSMISSION UNIT (2UZ−FE)

AT140−01

COMPONENTS

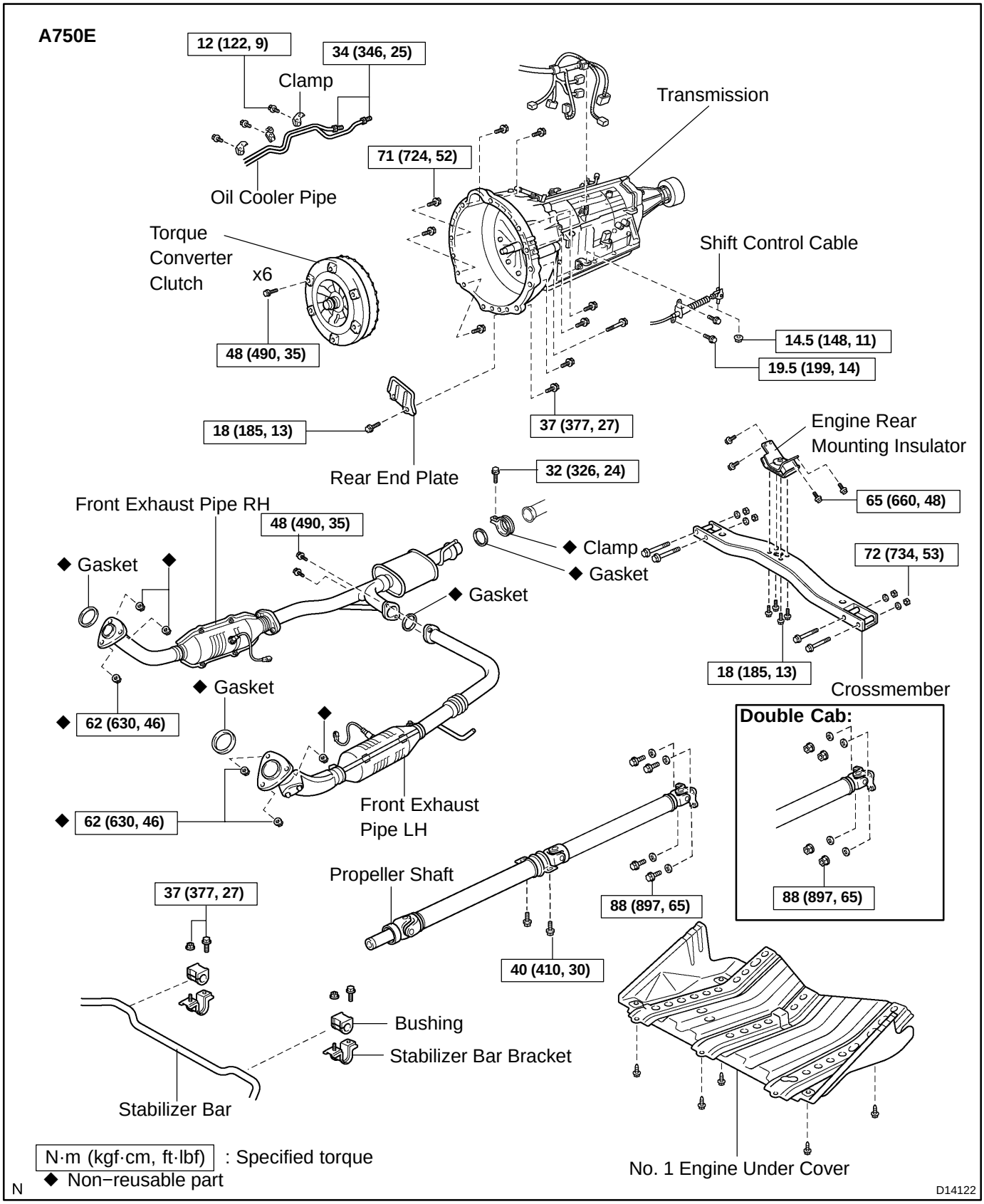

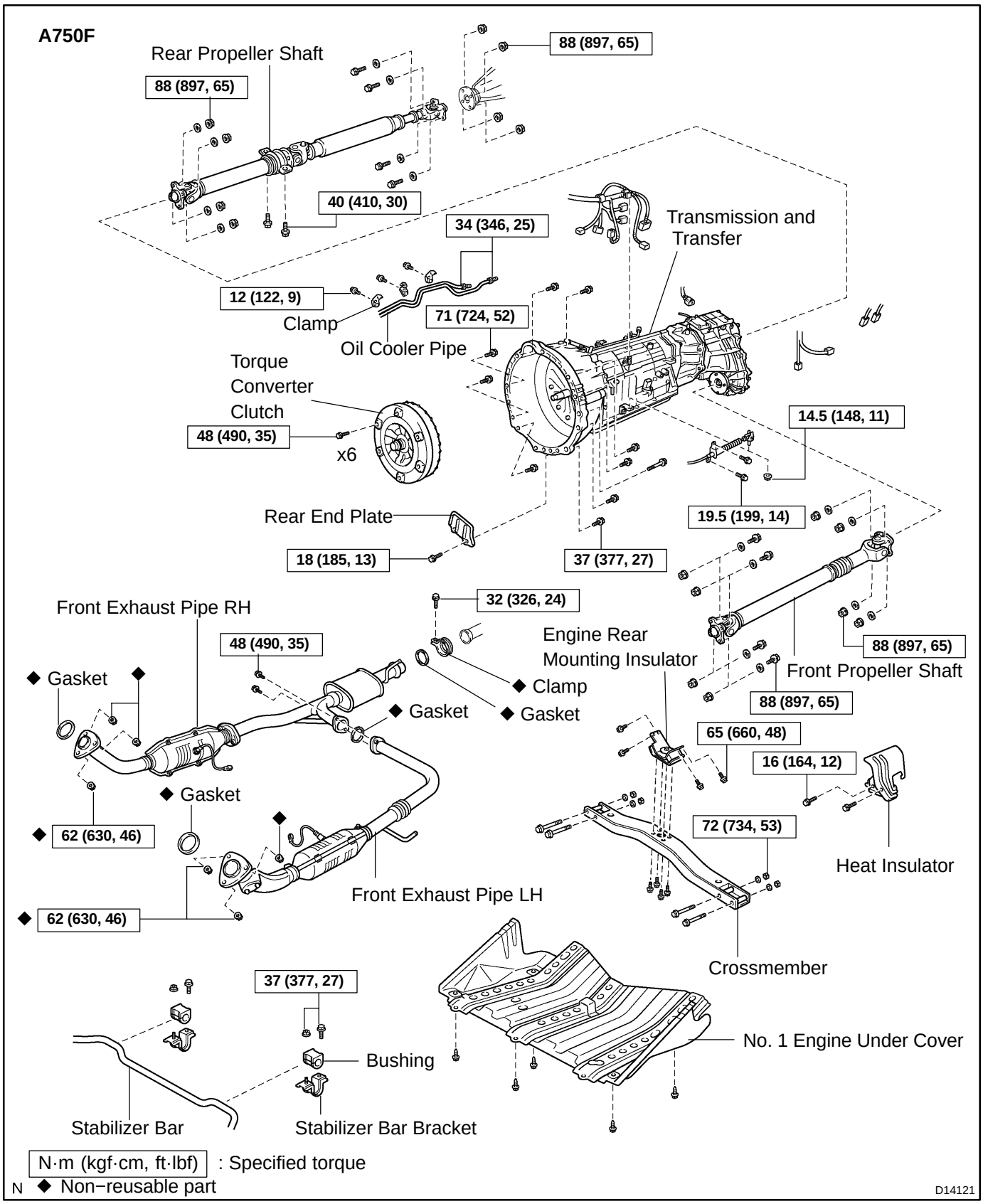
A750F
Rear Propeller Shaft
88 (897, 65)
88 (897, 65)
40 (410, 30)
34 (346, 25)
Transmission and Transfer
12 (122, 9)
Clamp
Oil Cooler Pipe
71 (724, 52)
Torque Converter Clutch
48 (490, 35)
x6
14.5 (148, 11)
19.5 (199, 14)
Rear End Plate
18 (185, 13)
37 (377, 27)
32 (326, 24)
Front Exhaust Pipe RH
48 (490, 35)
Engine Rear Mounting Insulator
Clamp
Gasket
Gasket
Gasket
Gasket
88 (897, 65)
Front Propeller Shaft
88 (897, 65)
65 (660, 48)
16 (164, 12)
72 (734, 53)
Heat Insulator
62 (630, 46)
62 (630, 46)
Front Exhaust Pipe LH
Crossmember
37 (377, 27)
Bushing
No. 1 Engine Under Cover
Stabilizer Bar
Stabilizer Bar Bracket
N·m (kgf·cm, ft·lbf) : Specified torque
◆ Non−reusable part
N
D14121

AT142−01

INSTALLATION

1. CHECK TORQUE CONVERTER INSTALLATION

(a) Install the torque converter to the transmission housing.

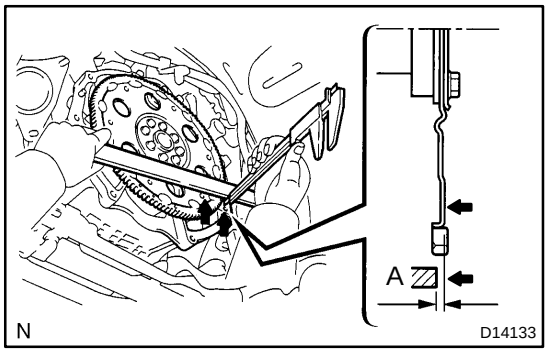

(b) Using vernier calipers and a straight edge, measure dimension A between the transmission fitting part and the converter fitting part of the drive plate.

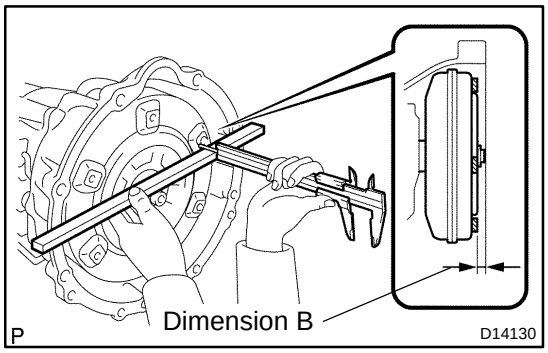

(c) Using vernier calipers and a straight edge, measure the dimension B shown in the illustration and check that B is greater than A measured in step (b).

Standard distance: A + 1 mm (0.04 in.) or more

2. MEASURE DRIVE PLATE RUNOUT AND INSPECT RING GEAR (See page AT−39)

3. TRANSMISSION INSTALLATION

(a) Installation is in the reverse order of removal (See page AT−34).

(b) Adjust the shift lever position (See page DI−1117).

(c) Fill the transmission (See page AT−4).

(d) Conduct the road test of the vehicle (See page DI−1118).

AT141−01

REMOVAL

1. JACK UP VEHICLE

2. REMOVE NO. 1 ENGINE UNDER COVER

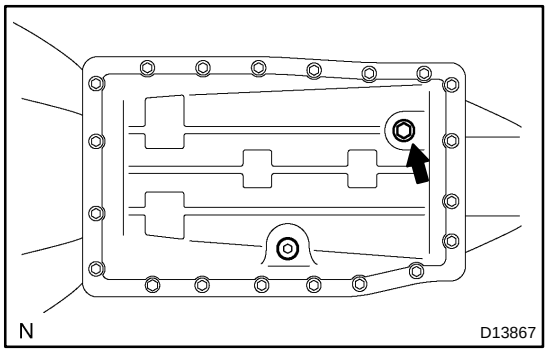

3. DRAIN AUTOMATIC TRANSMISSION FLUID

(a) Remove the drain plug and gasket, and drain the ATF.

(b) Install a new gasket and the drain plug.

Torque: 20 N·m (204 kgf·cm, 15 ft·lbf)

4. REMOVE RH AND LH FRONT EXHAUST PIPE (See page EM−125)

5. A750E:
REMOVE PROPELLER SHAFT (See page PR−3)

6. A750F:
REMOVE HEAT INSULATOR

Remove the 2 bolts and heat insulator.

Torque: 16 N·m (164 kgf·cm, 12 ft·lbf)

7. A750F:
REMOVE FRONT AND REAR PROPELLER SHAFT (See page PR−10)

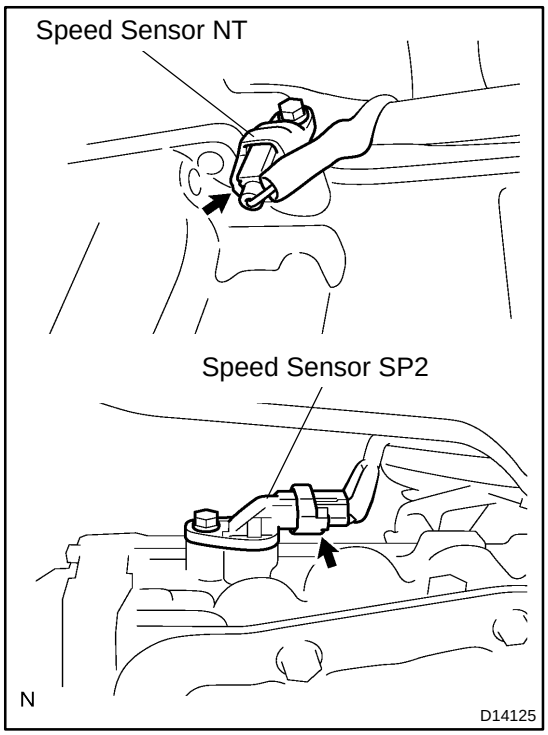

8. DISCONNECT SPEED SENSOR NT AND SP2 CONNECTORS

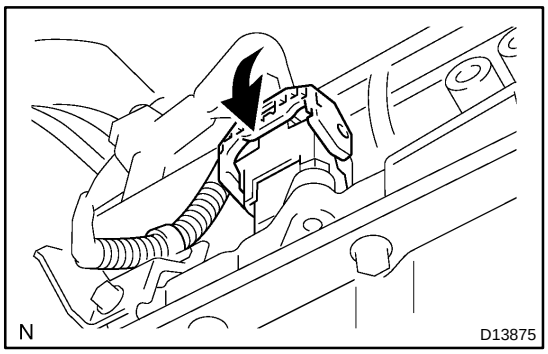

9. DISCONNECT TRANSMISSION WIRE CONNECTOR

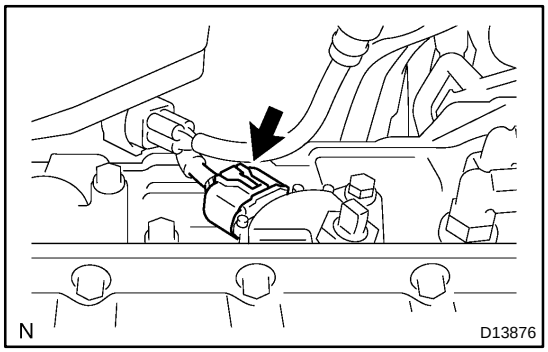

10. DISCONNECT PARK/NEUTRAL POSITION SWITCH CONNECTOR

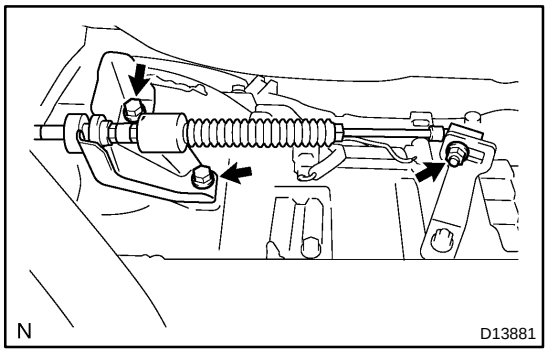

11. SEPARATE SHIFT CONTROL CABLE FROM TRANSMISSION

(a) Remove the nut and disconnect the shift control cable.
Torque: 14.5 N·m (148 kgf·cm, 11 ft·lbf)

(b) Remove the 2 bolts and shift control cable bracket from the transmission.
Torque: 19.5 N·m (199 kgf·cm, 14 ft·lbf)

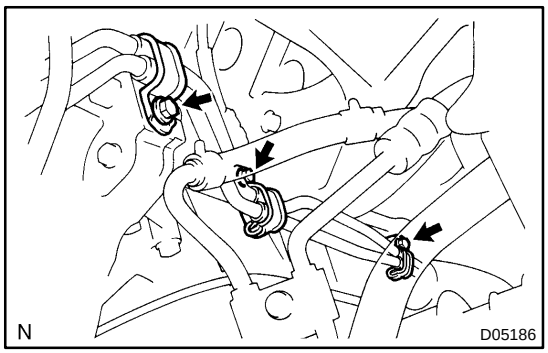

12. DISCONNECT OIL COOLER PIPE

(a) Remove the 3 bolts and clamps.
Torque: 12 N·m (122 kgf·cm, 9 ft·lbf)

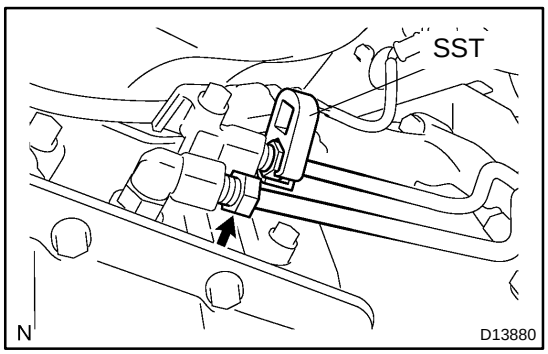

(b) Disconnect the 2 oil cooler pipes.
SST 09023−12701
Torque: 34 N·m (346 kgf·cm, 25 ft·lbf)

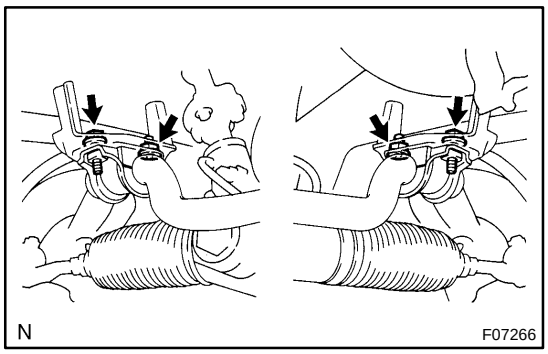

13. DISCONNECT STABILIZER BAR

(a) Remove the 2 bolts, nuts and stabilizer bar with the bushings and brackets.
Torque: 37 N·m (377 kgf·cm, 27 ft·lbf)

(b) Disconnect the stabilizer bar.

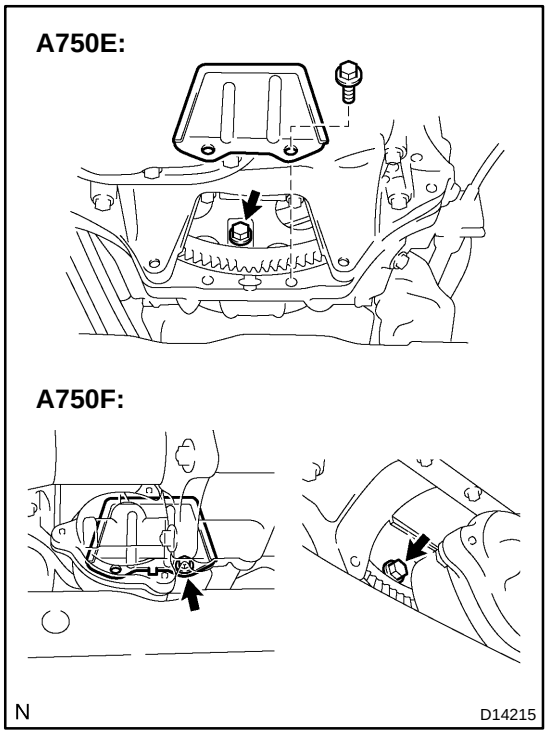

14. REMOVE REAR END PLATE AND TORQUE CONVERTER CLUTCH MOUNTING BOLT

(a) Remove the bolt and rear end plate.
Torque: 18 N·m (185 kgf·cm, 13 ft·lbf)

(b) Turn the crankshaft to gain access and remove the 6 bolts while holding the crankshaft pulley set bolt with a wrench.
Torque: 48 N·m (490 kgf·cm, 35 ft·lbf)

HINT:
At the time of installation, refer to the following:
First install the green colored bolt and then the remaining 5 bolts.

15. JACK UP TRANSMISSION SLIGHTLY

Securely support the transmission on a transmission jack.
Lift the transmission slightly from the crossmember.

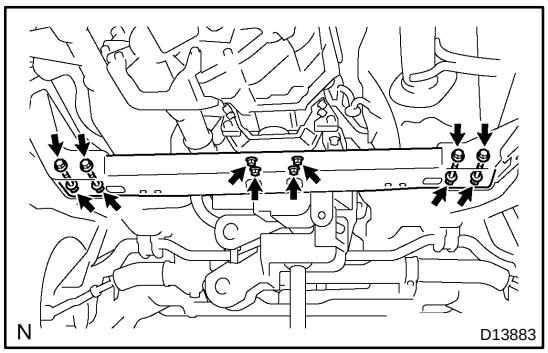

16. REMOVE CROSSMEMBER

(a) Remove the 4 bolts of the engine rear mounting insulator on the crossmember.
Torque: 18 N·m (185 kgf·cm, 13 ft·lbf)

(b) Remove the 4 nuts, bolts, washers and crossmember.
Torque: 72 N·m (734 kgf·cm, 53 ft·lbf)

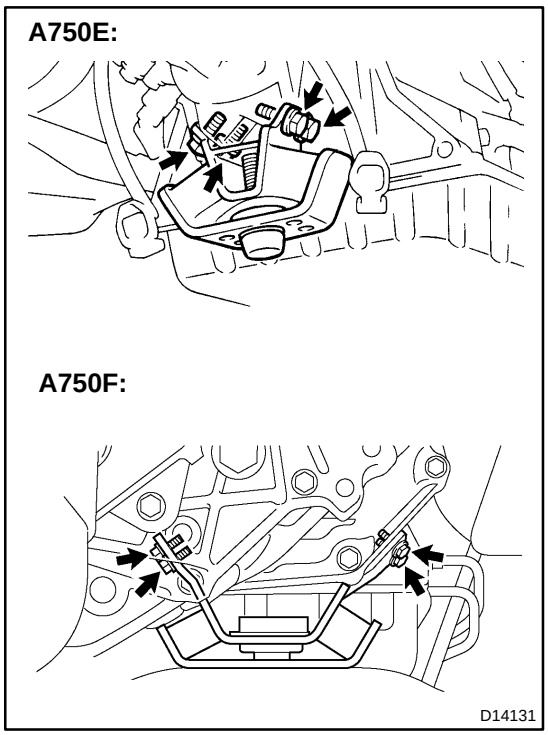

17. REMOVE ENGINE REAR MOUNTING INSULATOR

Remove the 4 bolts and engine rear mounting insulator.

Torque: 65 N·m (660 kgf·cm, 48 ft·lbf)

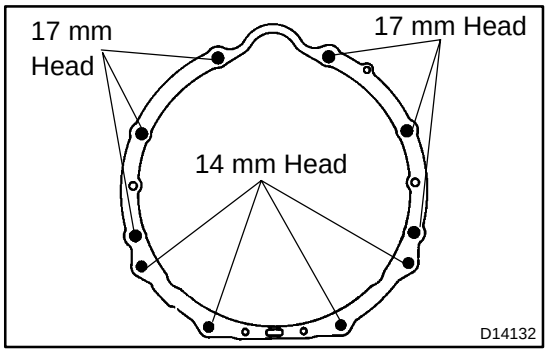

18. REMOVE TRANSMISSION

(a) A750E:
Separate the wire harness from the transmission.

(b) A750F:
Separate the wire harness from the transmission and transfer.

(c) Lower the rear end of the transmission.

(d) Remove the 10 bolts and transmission.

Torque:
17 mm head: 71 N·m (724 kgf·cm, 52 ft·lbf)
14 mm head: 37 N·m (377 kgf·cm, 27 ft·lbf)

COLUMN SHIFT ASSEMBLY

COMPONENTS

AT13U−01

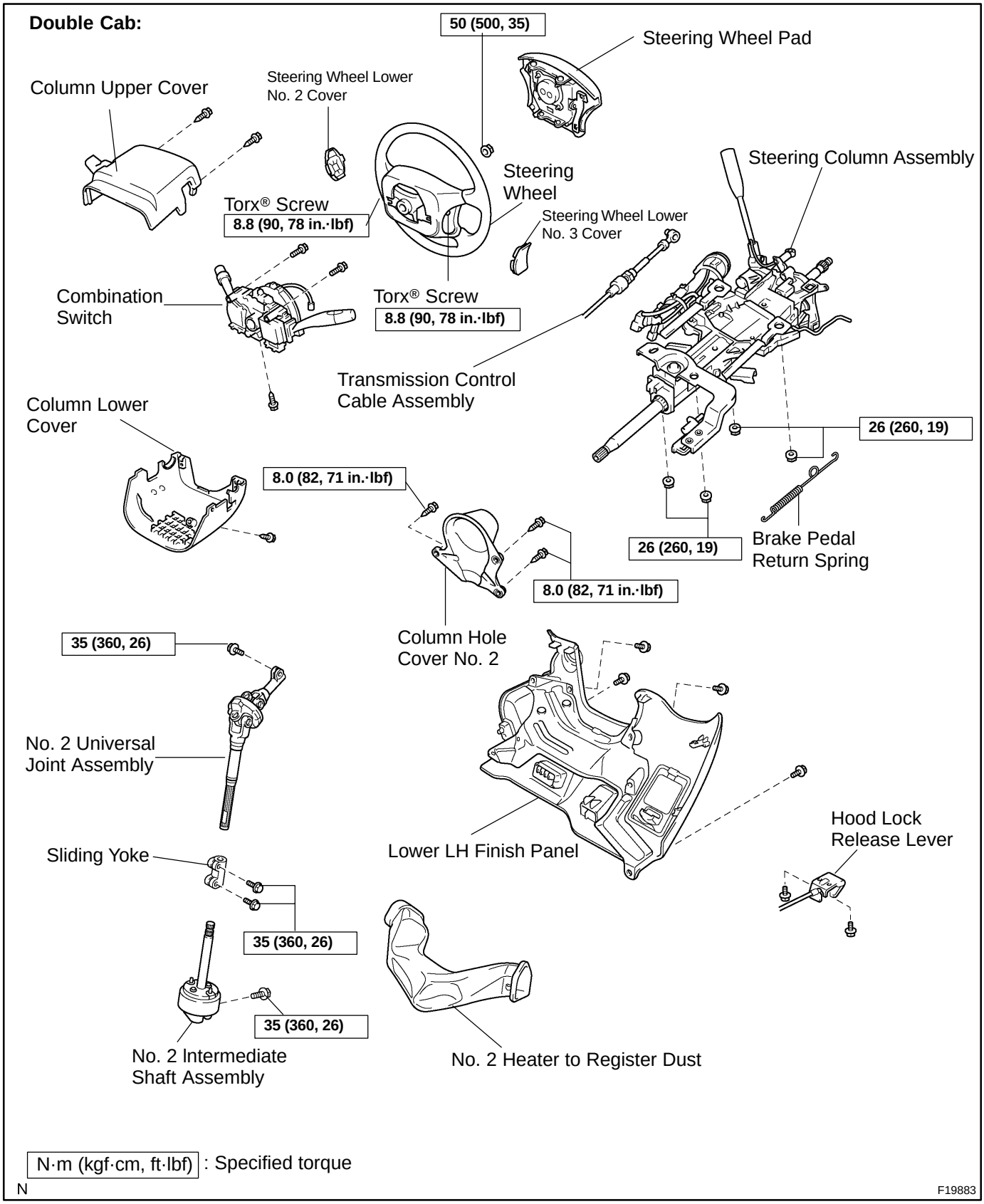

Standard Cab, Access Cab:
Non−tilt steering column

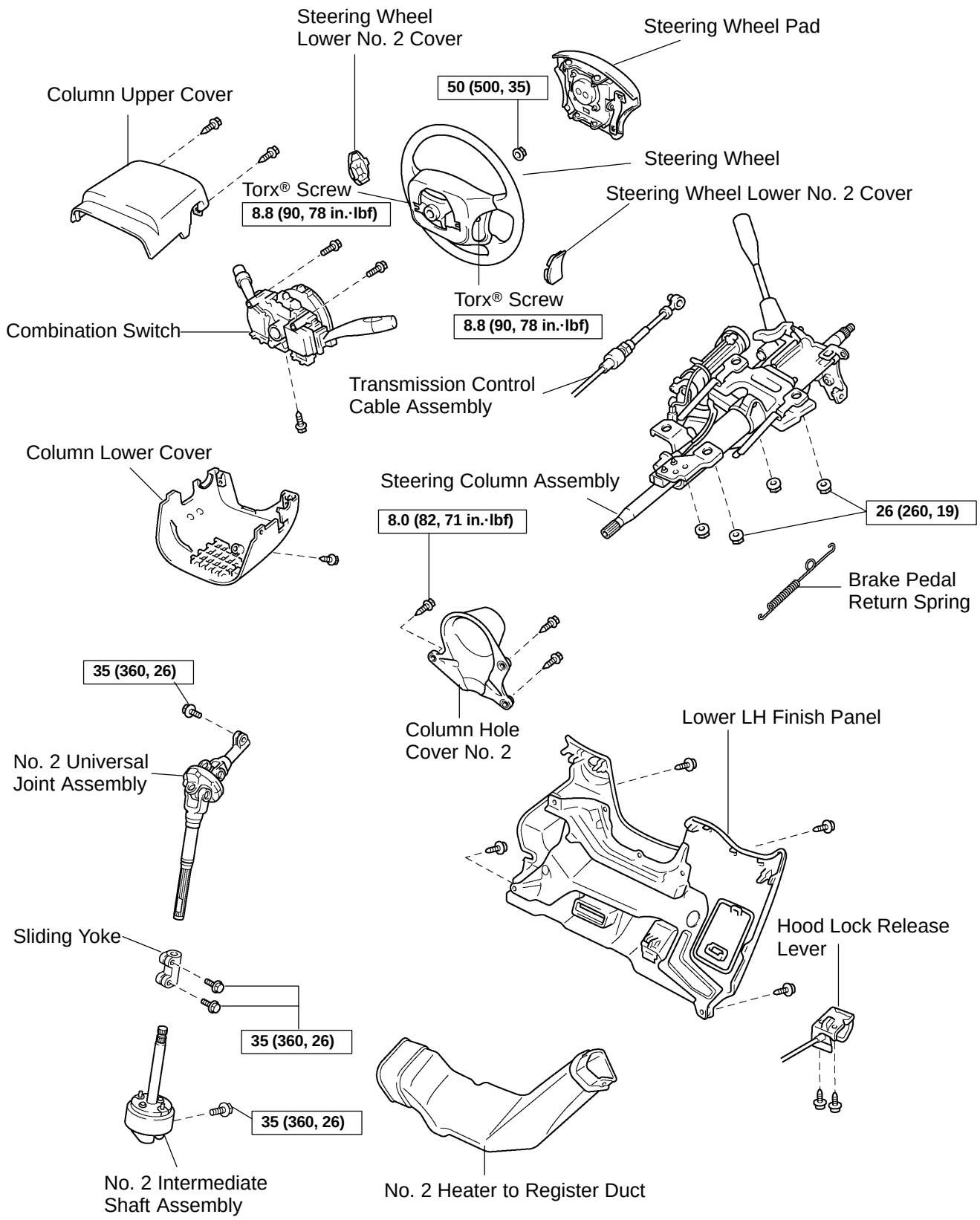

N·m (kgf·cm, ft·lbf) : Specified torque

N

F17899

Standard Cab, Access Cab:
Tilt steering column

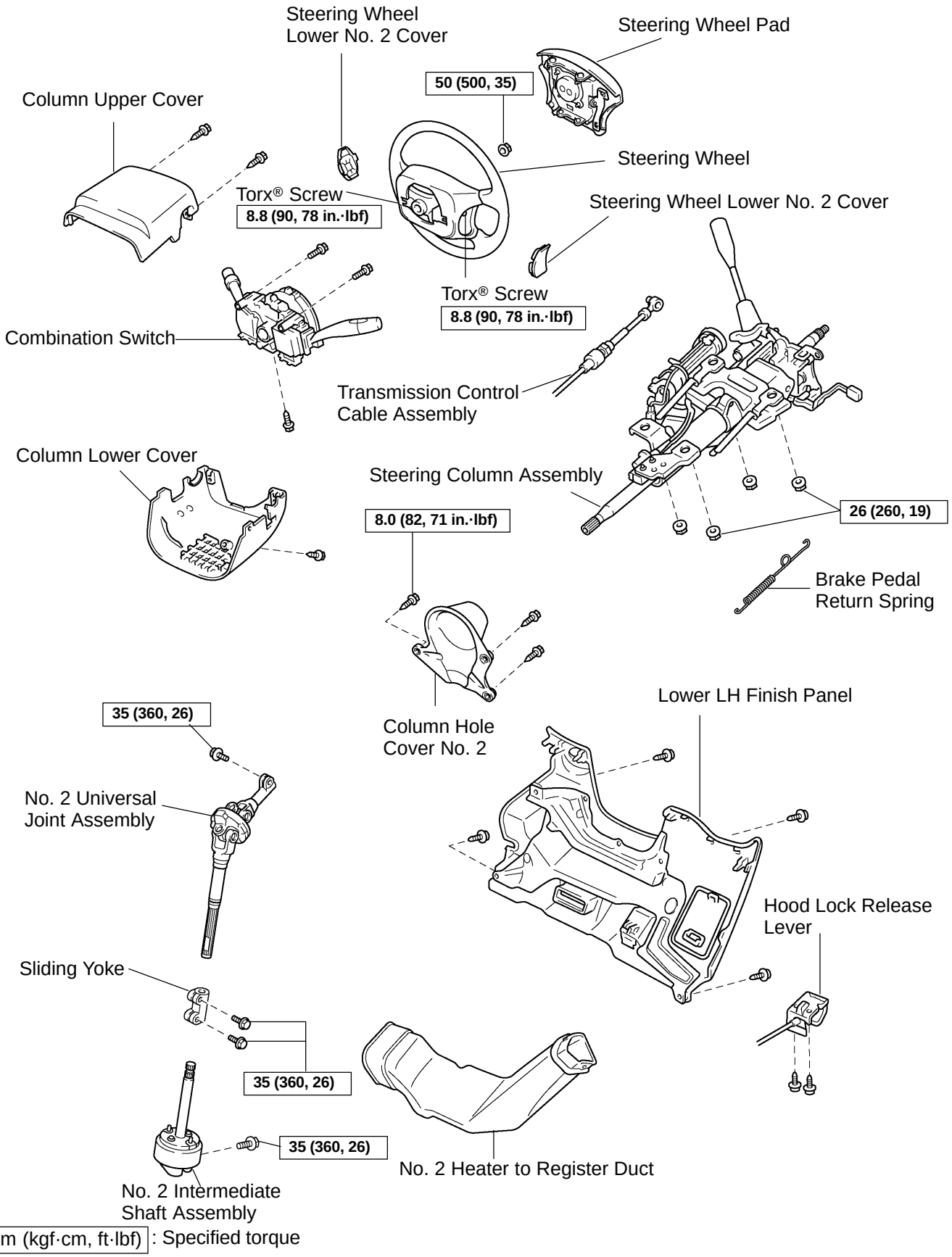

N·m (kgf·cm, ft·lbf) : Specified torque

N

F17901

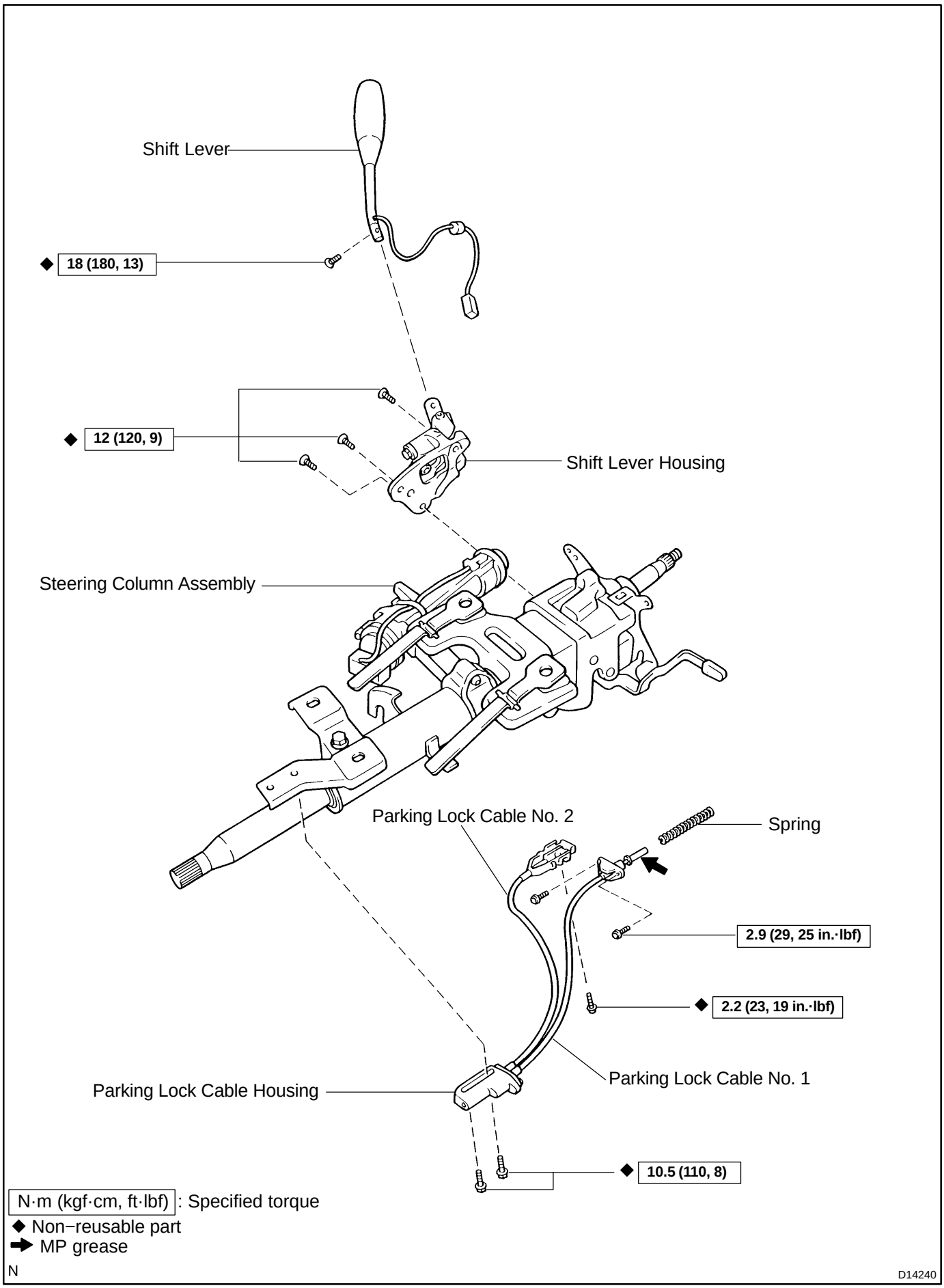
Shift Lever
◆ 18 (180, 13)
◆ 12 (120, 9)
Shift Lever Housing
Steering Column Assembly
Parking Lock Cable No. 2
Spring
2.9 (29, 25 in.·lbf)
◆ 2.2 (23, 19 in.·lbf)
Parking Lock Cable No. 1
Parking Lock Cable Housing
◆ 10.5 (110, 8)
N·m (kgf·cm, ft·lbf) : Specified torque
◆ Non−reusable part
➡ MP grease
N
D14240

AT13W−01

INSTALLATION

1. INSTALL SHIFT LEVER HOUSING

Using a torx® socket wrench, install the shift lever housing with the 3 new screws.

Torque: 12 N·m (120 kgf·cm, 9 ft·lbf)

2. INSTALL SHIFT LEVER

(a) Install the upper No. 2 steering column cover.

(b) Using a torx® socket wrench, install the shift lever with a new screw.

Torque: 18 N·m (180 kgf·cm, 13 ft·lbf)

(c) Connect the connector.

3. INSTALL PARKING LOCK CABLE NO. 1 AND NO. 2

(a) Apply MP grease on the lock pin and internal surface of shift lever housing.

(b) Install the spring and parking lock cable No. 1 into the shift lever housing.

NOTICE:

Be careful not to bend or twist the cable abnormally.

(c) Using a torx® socket wrench, install 2 new screws.

Torque: 2.9 N·m (29 kgf·cm, 25 in.·lbf)

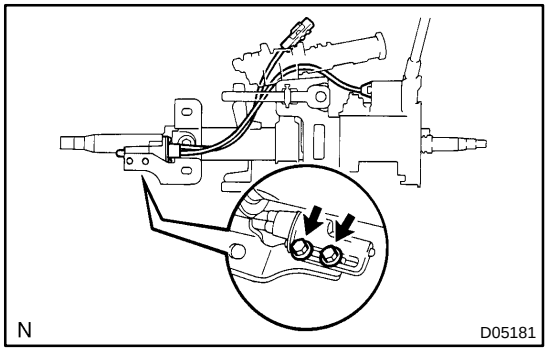

(d) Wire the cable No. 1 and No. 2, as shown in the illustration.

(e) Temporarily install the cable housing to steering column assembly with 2 new bolts.

NOTICE:

Be careful not to bend or twist the cable abnormally.

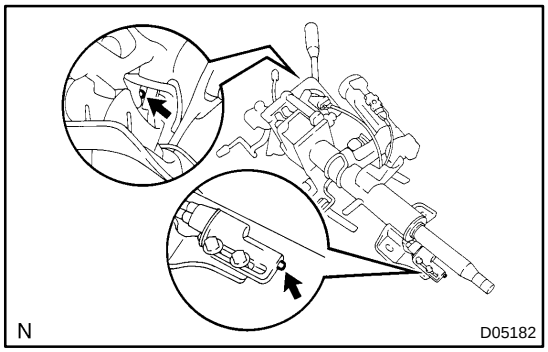

(f) After installation, confirm the following items.

(1) When the shift lever is in the P position and the pedal button is pushed in by 7 mm (0.28 in.), shift lever should be locked by lock pin.

(2) When the pedal button is released, the shift lever should be able to be shifted from P position to other positions.

(3) When the shift lever is in the N or D position and the pedal button is pushed in by 7 mm (0.28 in.), the shift lever should be able to be shifted.

(g) Install the cable No. 2 to column upper bracket with the clip.

(h) Install the cable end to the sliding block of the column upper bracket with the screw.

Torque: 2.2 N·m (23 kgf·cm, 19 in.·lbf)

(i) After installation, check the following items.

(1) When the pedal button is pushed, shift lever should be locked.

(2) When the pedal button is released, shift lever should be unlocked.

4. INSTALL STEERING COLUMN ASSEMBLY

(See page SR−28 or SR−42)

5. ADJUST CABLE HOUSING

(a) Shift the shift lever to the P position.

(b) Turn the ignition key to the LOCK position.

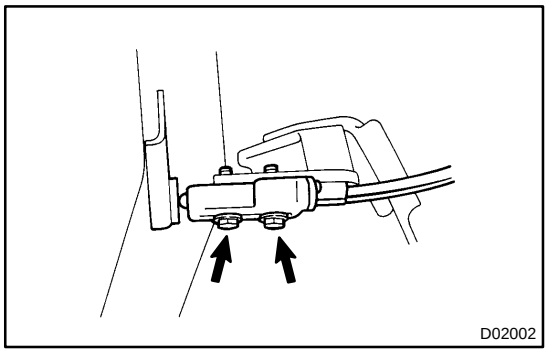

(c) Loosen the 2 bolts and adjust the cable housing.

HINT:

- Pedal button should touch the pedal plate cushion.
- Brake pedal should not be moved by the pedal button.
- Cable housing should not be toughed the brake pedal and the brake pedal plate cushion.

(d) Torque the 2 bolts.

Torque: 10.5 N·m (110 kgf·cm, 8 ft·lbf)

6. CONFIRM SHIFT LOCK SYSTEM OPERATION

(a) Only when the brake pedal is engaged and the ignition key is not in the LOCK position, the shift lever can be shifted from the P position to other positions.

When the shift lever is in the P position and the brake pedal is released, the shift lever cpnnot be shifted from the P position to other positions.

(b) When the shift lever is not in the P position, the ignition key cannot be turned to the LOCK position.

Only when the shift lever is in the P position, the ignition key can be removed.

(c) Cable No. 1 and No. 2 should not be deformed by other parts located around the steering column.

AT13V−01

REMOVAL

1. REMOVE STEERING COLUMN ASSEMBLY
(See page SR−18 or SR−33)

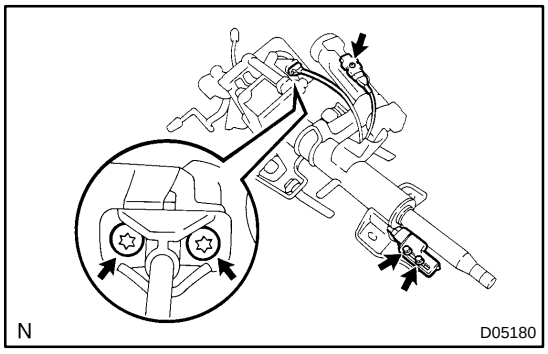

2. REMOVE PARKING LOCK CABLE ASSEMBLY

(a) Remove the screw and cable No. 2.

(b) Using a torx® socket wrench, remove the 2 screws and cable No. 1.

(c) Remove the spring.

(d) Remove the 2 bolts and parking lock cable housing.

3. REMOVE SHIFT LEVER

(a) Disconnect the connector.

(b) Using a torx® socket wrench, remove the torx® screw and shift lever.

4. REMOVE SHIFT LEVER HOUSING

Using a torx® socket wrench, remove the 3 torx® screws and shift lever housing.

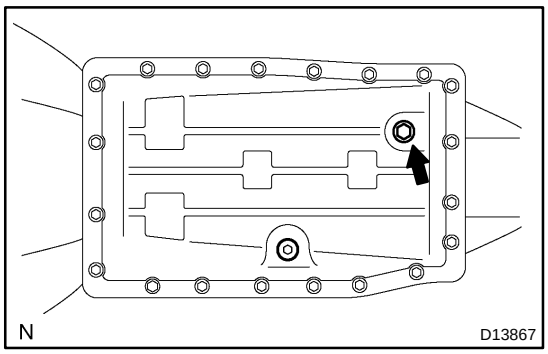

EXTENSION HOUSING OIL SEAL (A750E)

AT13L−01

ON−VEHICLE REPAIR

1. DRAIN AUTOMATIC TRANSMISSION FLUID

(a) Remove the drain plug and gasket, and drain the ATF.

(b) Install a new gasket and the drain plug.

Torque: 20 N·m (204 kgf·cm, 15 ft·lbf)

2. REMOVE PROPELLER SHAFT (See page PR−3)

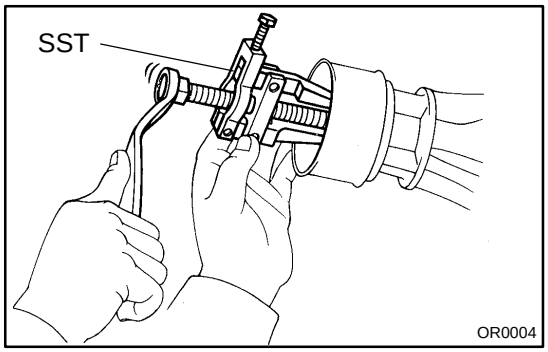

3. REMOVE REAR OIL SEAL

NOTICE:

Clean the extension housing before removing the oil seal.

Using SST, remove the oil seal.

SST 09308−10010

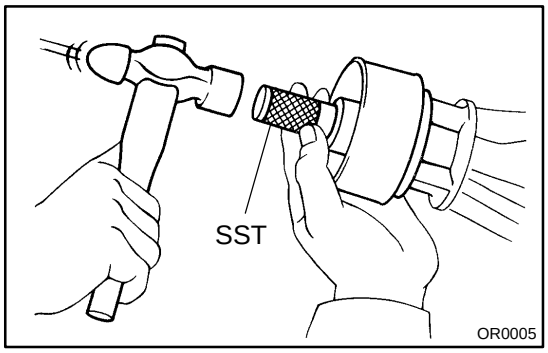

4. INSTALL OIL SEAL

(a) Using SST and a hammer, carefully drive a new oil seal in until it stops.

SST 09325−40010

(b) Coat the lip of the oil seal with MP grease.

5. INSTALL PROPELLER SHAFT (See page PR−8)

6. FILL TRANSMISSION (See page AT−4)

PARKING LOCK PAWL

AT13Q−01

ON−VEHICLE REPAIR

1. REMOVE VALVE BODY (See page AT−12)

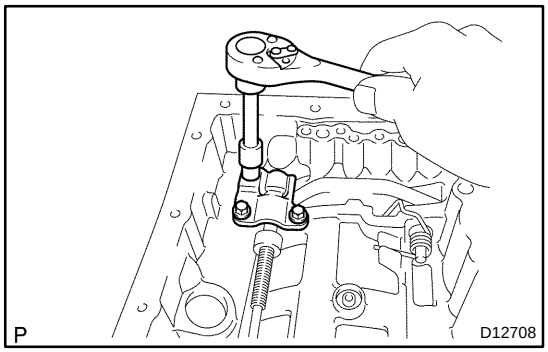

2. REMOVE PARKING LOCK PAWL BRACKET

Remove the 3 bolts and parking lock pawl bracket.

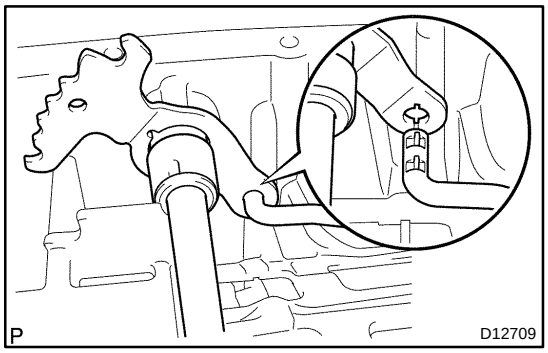

3. REMOVE PARKING LOCK ROD

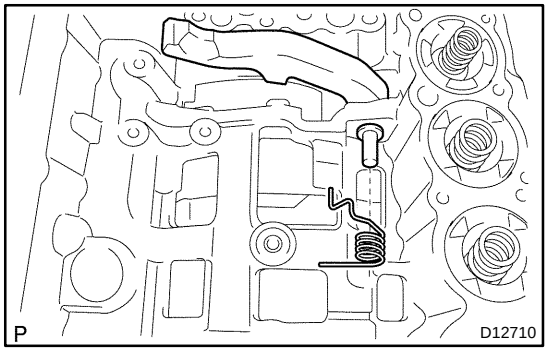

4. REMOVE SPRING FROM PARKING LOCK PAWL SHAFT

5. REMOVE PARKING LOCK PAWL AND SHAFT

6. INSTALL PARKING LOCK PAWL AND SHAFT

7. INSTALL SPRING TO PARKING LOCK PAWL SHAFT

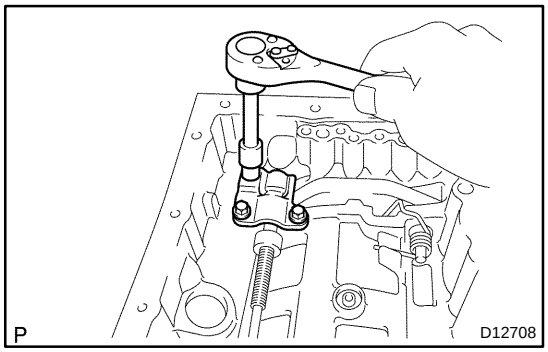

8. INSTALL PARKING LOCK PAWL BRACKET

Install the parking lock pawl bracket with the 3 bolts.

HINT:

- Push the lock rod fully forward.
- Check that the parking lock pawl operates smoothly.

Torque: 7.4 N·m (75 kgf·cm, 65 in.·lbf)

9. INSTALL VALVE BODY (See page AT−12)

PARK/NEUTRAL POSITION (PNP) SWITCH

AT13O−01

ON−VEHICLE REPAIR

1. DISCONNECT PARK/NEUTRAL POSITION SWITCH CONNECTOR

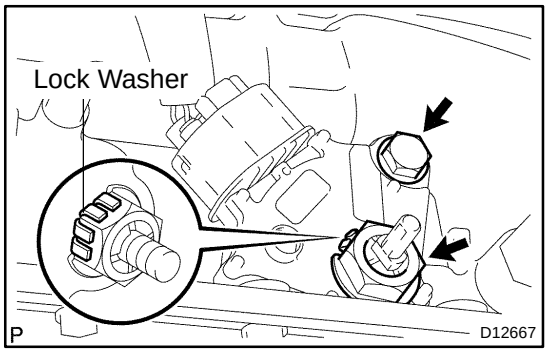

2. REMOVE PARK/NEUTRAL POSITION SWITCH

(a) Pry off the lock washer and remove the nut.

(b) Remove the bolt and park/neutral position switch.

3. INSTALL PARK/NEUTRAL POSITION SWITCH

(a) Install the park/neutral position switch with the bolt.
Torque: 13 N·m (130 kgf·cm, 10 ft·lbf)

(b) Install a new lock washer and the nut.
Torque: 6.9 N·m (70 kgf·cm, 61 in.·lbf)

(c) Bend the claws on the lock washer to stake the nut.

(d) Adjust the park/neutral position switch
(See page DI−952 or DI−1117).

4. CONNECT PARK/NEUTRAL POSITION SWITCH CONNECTOR

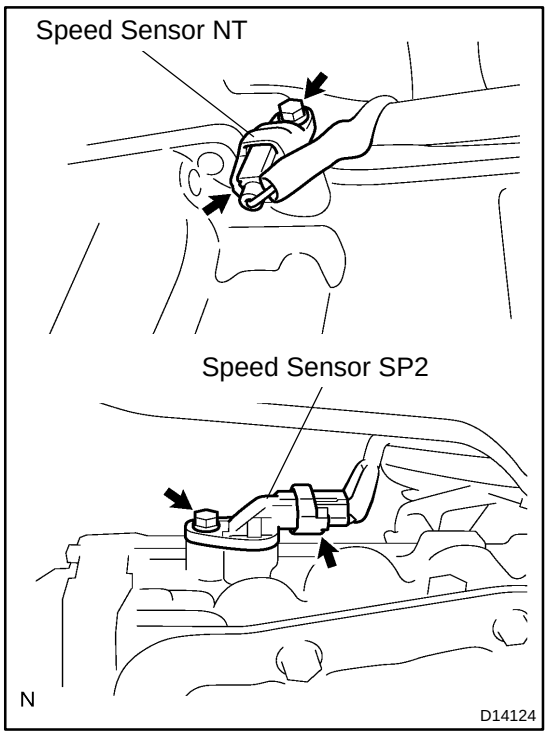

SPEED SENSOR

AT13M−01

ON−VEHICLE REPAIR

1. DISCONNECT SPEED SENSOR NT AND SP2 CONNECTOR

2. REMOVE SPEED SENSOR NT AND SP2

(a) Remove the 2 bolts, speed sensors NT and SP2.

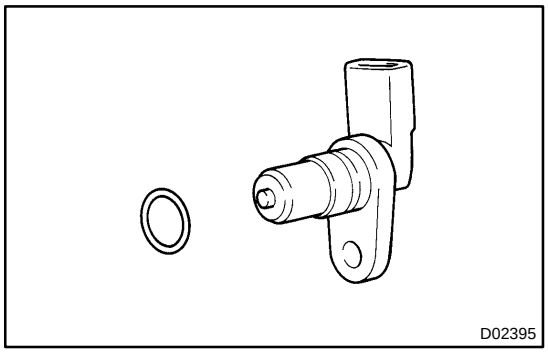

(b) Remove the 2 O−rings from the speed sensors NT and SP2.

3. INSTALL SPEED SENSOR NT AND SP2

(a) Coat 2 new O−rings with ATF and install them to the speed sensors NT and SP2.

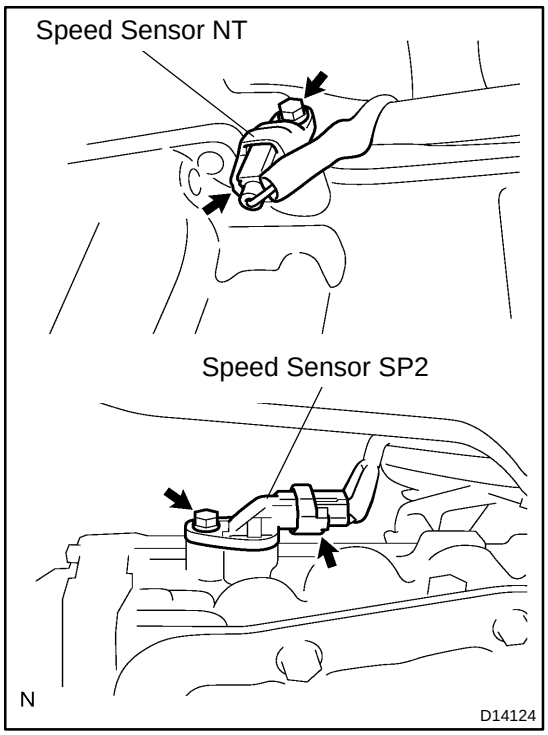

(b) Install the speed sensors NT and SP2 with the 2 bolts.
Torque: 5.4 N·m (55 kgf·cm, 48 in.·lbf)

4. CONNECT SPEED SENSOR NT AND SP2 CONNECTOR

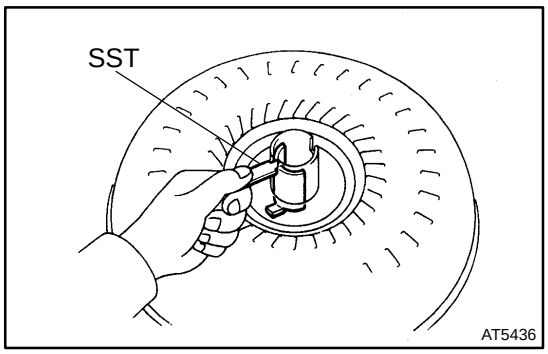

TORQUE CONVERTER CLUTCH AND DRIVE PLATE INSPECTION

AT143−01

1. INSPECT ONE−WAY CLUTCH

(a) Install SST so that it fits in the notch of the converter hub and outer race of the one−way clutch.
SST 09350−30020 (09351−32020)

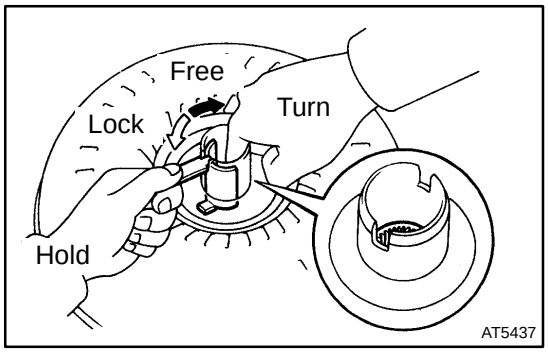

(b) Press on the serrations of the stator with a finger and rotate it.

(c) Check if it rotates smoothly when turned clockwise and locks when turned counterclockwise.

If necessary, clean the converter clutch and retest the one−way clutch.

Replace the converter clutch if the clutch still fails the test.

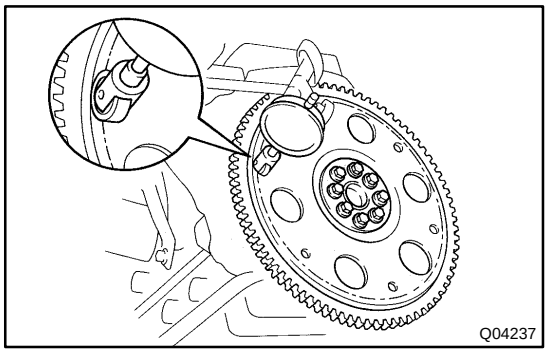

2. MEASURE DRIVE PLATE RUNOUT AND INSPECT RING GEAR

(a) Set up a dial indicator and measure the drive plate runout.
Maximum runout: 0.20 mm (0.0079 in.)

(b) Check for damage to the ring gear.

If runout is not within the specification or if the ring gear is damaged, replace the drive plate. If installing a new drive plate, note the orientation of the spacers and tighten the bolts (See page **EM−108**, **EM−83** or **EM−95**).

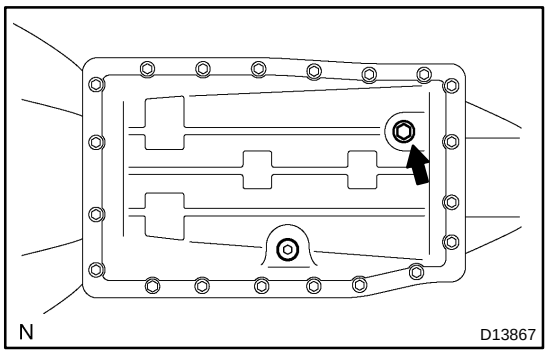

VALVE BODY ASSEMBLY

AT13P−01

ON−VEHICLE REPAIR

1. DRAIN AUTOMATIC TRANSMISSION FLUID

(a) Remove the drain plug and gasket, and drain the ATF.
(b) Install a new gasket and the drain plug.
Torque: 20 N·m (204 kgf·cm, 15 ft·lbf)

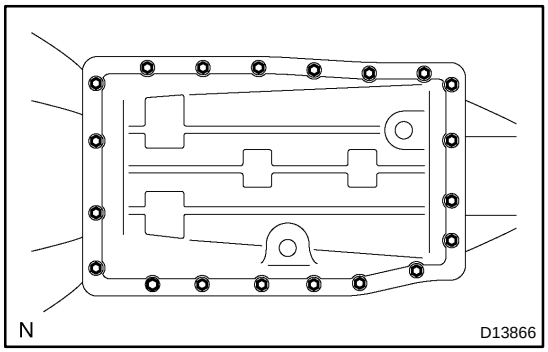

2. REMOVE OIL PAN

NOTICE:
Some fluid will remain in the oil pan.
(a) Remove the 20 bolts.
(b) Remove the oil pan gasket.

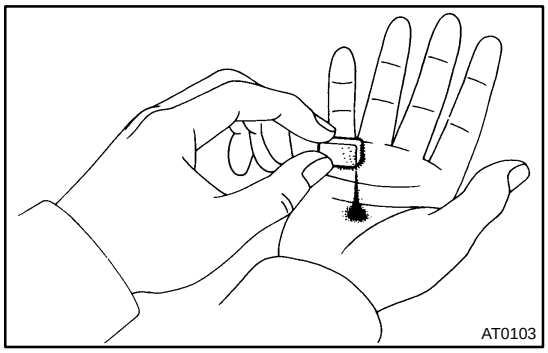

3. EXAMINE PARTICLES IN PAN

Remove the magnets and use them to collect any steel particles. Carefully look at the foreign matter and particles in the pan and on the magnets to anticipate the type of wear you will find in the transmission.
Steel (magnetic) ... bearing, gear and clutch plate wear
Brass (non−magnetic) ... bushing wear

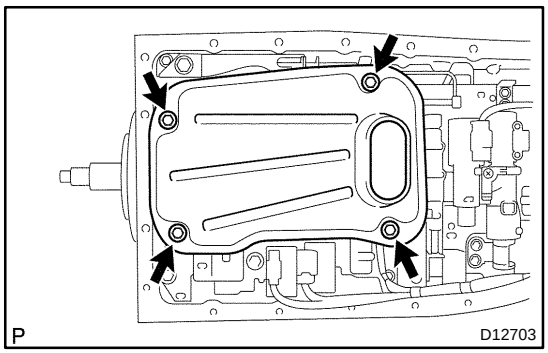

4. REMOVE OIL STRAINER

Remove the 4 bolts, the oil strainer and the O−ring.
NOTICE:
Be careful as some fluid will come out with the oil strainer.

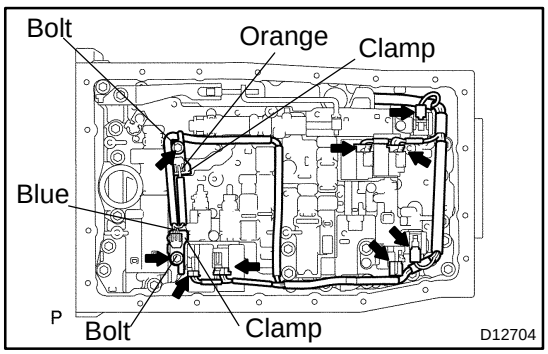

5. REMOVE ATF TEMPERATURE SENSOR

(a) Disconnect the 7 solenoid valve connectors.
(b) Remove the 2 bolts, clamps and ATF temperature sensors.

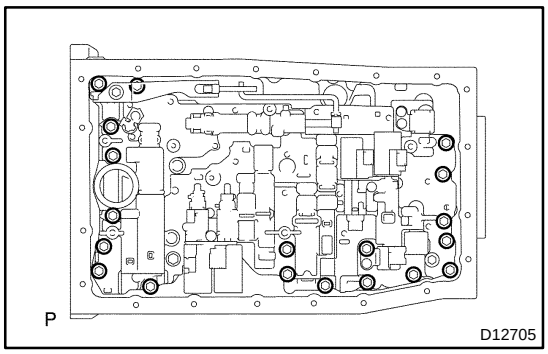

6. REMOVE VALVE BODY

(a) Remove the 19 bolts and the valve body.

(b) Remove the 3 drum seal gaskets.

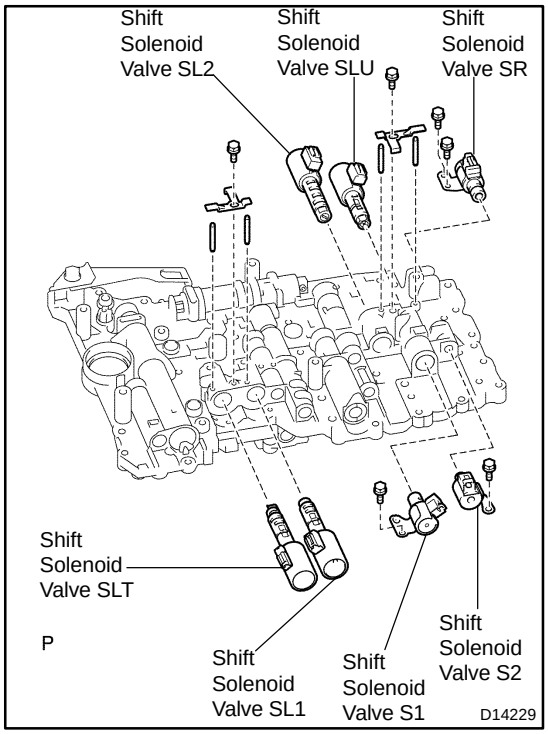

7. REMOVE SOLENOID VALVE

(a) Remove the 2 bolts and the shift solenoid valve SR.

(b) Remove the 3 bolts and the shift solenoid valves S1 and S2.

(c) Remove the 2 bolts, 2 solenoid lock plates and the 4 straight pins.

(d) Remove the shift solenoid valves SL2 and SLU.

(e) Remove the shift solenoid valves SL1 and SLT.

(f) Remove the O−ring from the solenoid valve S2.

8. INSTALL SOLENOID VALVE

(a) Install a new O−ring to the shift solenoid valve S2.

(b) Install the shift solenoid valves SL1 and SLT.

(c) Install the shift solenoid valves SL2 and SLU.

(d) Install the 4 straight pins and the 2 solenoid lock plates with the 2 bolts.
Torque: 6.4 N·m (65 kgf·cm, 57 in·lbf)

(e) Install the shift solenoid valve S1 with the bolt.
Torque: 6.4 N·m (65 kgf·cm, 57 in·lbf)

(f) Install the shift solenoid valve S2 with the bolt.
Torque: 10 N·m (102 kgf·cm, 7 ft·lbf)

(g) Install the shift solenoid valve SR with the 2 bolts.
Torque: 6.4 N·m (65 kgf·cm, 57 in·lbf)

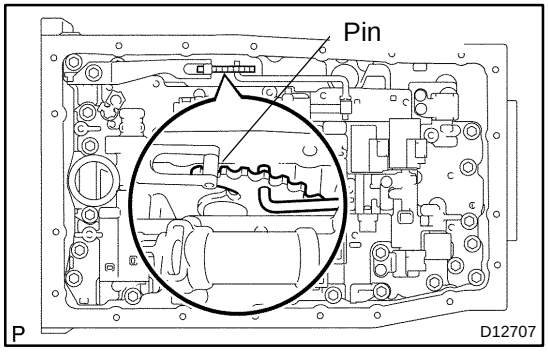

9. INSTALL VALVE BODY

HINT:

Align the groove of the manual valve with the pin of the lever.

(a) Install 3 new drum seal gaskets to the transmission case.

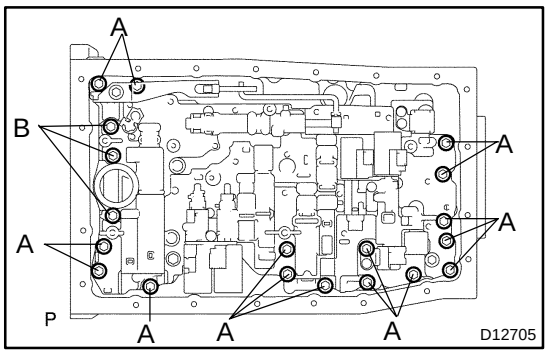

(b) Install the 19 bolts and the valve body.
Torque: 11 N·m (112 kgf·cm, 8 ft·lbf)
Bolt length:
Bolt A: 25 mm (0.98 in.)
Bolt B: 36 mm (1.42 in.)

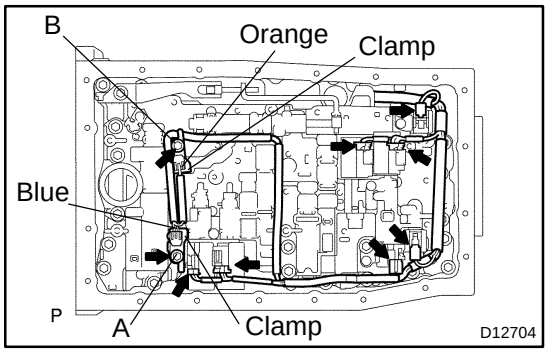

10. INSTALL TEMPERATURE SENSOR
(a) Connect the 7 solenoid valve connectors.
(b) Install the 2 temperature sensors and clamps to the valve body with the 2 bolts.

HINT:
In order to install the ATF temperature sensors properly, check the wire harness color prior to installation.

Torque:
A: 11 N·m (112 kgf·cm, 8 ft·lbf)
B: 10 N·m (100 kgf·cm, 7 ft·lbf)
Bolt length:
Bolt A: 36 mm (1.42 in.)
Bolt B: 12 mm (0.47 in.)

Sensor wire harness:

Wire harness	Color
for linear control	Orange
for oil temp. warning lamp	Blue

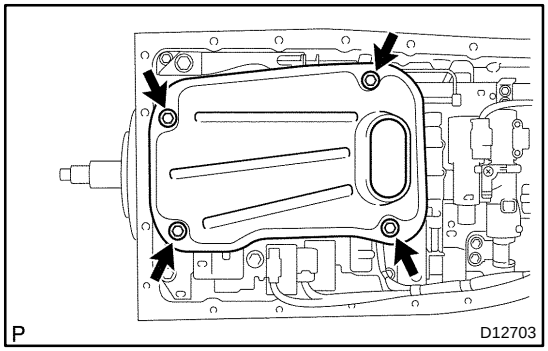

11. INSTALL OIL STRAINER
(a) Install a new O−ring.
(b) Install the oil strainer with the 4 bolts.
Torque: 10 N·m (100 kgf·cm, 7 ft·lbf)

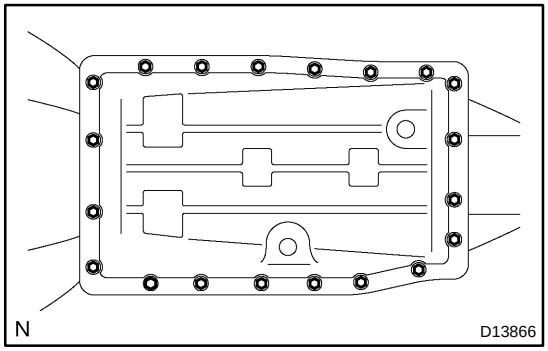

12. INSTALL OIL PAN

HINT:
Remove any packing material, and be careful not to spill oil on the contacting surfaces of the transmission case and the oil pan.

Using a new gasket, install the oil pan with the 20 bolts.
Torque: 4.4 N·m (45 kgf·cm, 39 in·lbf)

13. FILL TRANSMISSION (See page AT−4)

BODY ELECTRICAL SYSTEM

BE01E−11

PRECAUTION

Carefully to observe the following precautions when servicing the parts related to the body electrical system.

1. LIGHTING SYSTEM

Halogen bulbs have pressurized gas inside and require special handling.
They can burst or scatter if scratched or dropped. Hold a bulb only by its plastic or metal case. Do not touch the glass part of a bulb with bare hands.

2. SRS (SUPPLEMENTAL RESTRAINT SYSTEM)

The TOYOTA TUNDRA is equipped with the Supplemental Restraint System (SRS) (for example, the driver airbag). Failure to carry out service operations in the correct sequence could cause the SRS to unexpectedly deploy during servicing, possibly leading to a serious accident. Before servicing (including removal, installation, inspection and replacement), be sure to read the precautionary notices in the RS section.

3. AUDIO SYSTEM

If the battery negative (−) terminal is disconnected, the preset AM, FM 1 and FM 2 stations stored in the memory are erased. Be sure to make a note of the stations and reset them after the battery terminal is reconnected.

4. MOBILE COMMUNICATION SYSTEM

If the vehicle is equipped with a mobile communication system, refer to the precautions for the mobile communication system in the IN section.

BE2LY−02

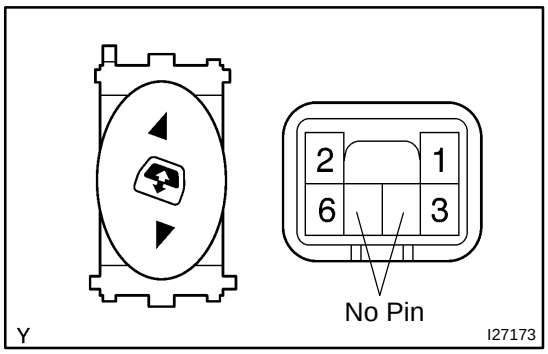

INSPECTION

1. INSPECT BACK POWER WINDOW SWITCH CONTINUITY

Switch Position	Tester Connection	Specified Condition
UP	1 − 3, 2 − 6	Continuity
OFF	2 − 3, 2 − 6	No continuity
DOWN	1 − 6, 2 − 3	Continuity

If the continuity is not as specified, replace the switch.

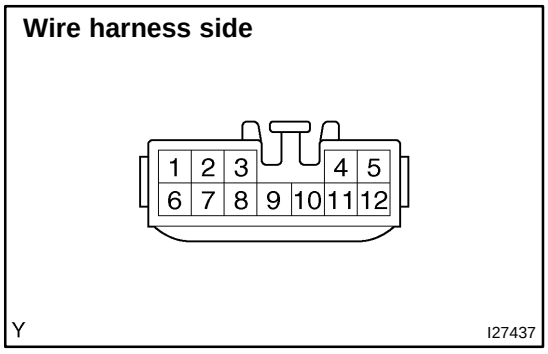

2. CHECK BACK WINDOW CONTROL RELAY CIRCUIT

(a) Disconnect the connector from the relay, and check the connector on the wire harness side, as shown in the table below.

Tester Connection	Condition	Specified Condition
6 − Body ground	Ignition switch OFF or ACC ⟶ ON	0 V ⟶ 10 to 14 V
8 − Body ground	Limit switch OFF ⟶ ON	10 kΩ or higher ⟶ Below 1 Ω
9 − Body ground	Constant	Continuity
11 − Body ground	Constant	Continuity
12 − Body ground	Ignition switch OFF or ACC ⟶ ON	0 V ⟶ 10 to 14 V

If the result is not as specified, there may be a malfunction on the wire harness side or limit switch.

(b) Reconnect the connector to the relay, and check the connector on the wire harness side, as shown in the table below.

Tester Connection	Condition	Specified Condition
4 − Body ground	• Ignition switch ON • Power back window fully open • Limit switch OFF • Switch not pressed (OFF) ⟶ Pressed (UP)	0 V ⟶ 10 to 14 V
5 − Body ground	• Ignition switch ON • Power back window fully closed • Switch not pressed (OFF) ⟶ Pressed (DOWN)	0 V ⟶ 10 to 14 V

If the result is not as specified, replace the relay.

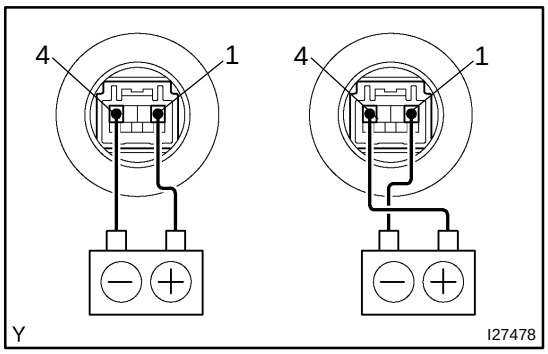

3. CHECK BACK POWER WINDOW MOTOR PTC THERMISTOR OPERATION

(a) Disconnect the connector from the window motor.
(b) Connect the positive (+) lead from the ammeter to terminal 1 of the wire harness side connector and the negative (−) lead to the negative terminal of the battery.
(c) Connect the positive (+) lead from the battery to terminal 2 of the wire harness side connector, and slide the window to the fully closed position.

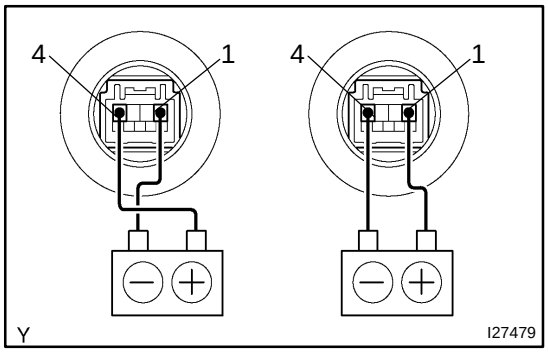

(d) Continue to apply voltage and check that the current changes to less than 1 A in 4 to 90 seconds.
(e) Disconnect the leads from the terminals.
(f) Approximately 60 seconds later, connect the positive (+) lead from the battery to terminal 1 and the negative (−) lead to terminal 2, and check that the window begins to moves down.

If operation is not as specified, replace the power back window regulator and motor assembly.

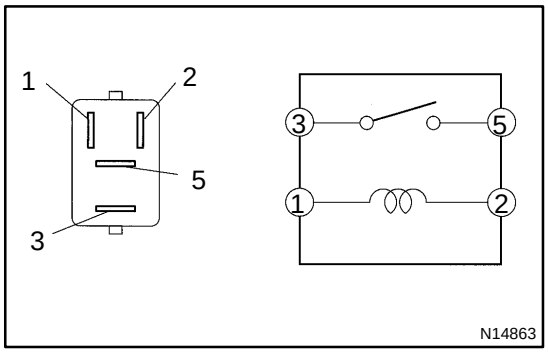

4. INSPECT POWER MAIN RELAY CONTINUITY

Tester Connection	Specified Condition
3 − 5	No Continuity
3 − 5	Continuity (When battery voltage is applied to terminals 1 and 2)

If the continuity is not as specified, replace the relay.

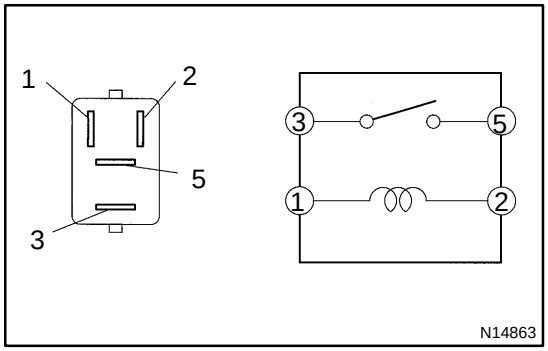

5. INSPECT BACK WINDOW RELAY CONTINUITY

Tester Connection	Specified Condition
3 − 5	No Continuity
3 − 5	Continuity (When battery voltage is applied to terminals 1 and 2)

If the continuity is not as specified, replace the relay.

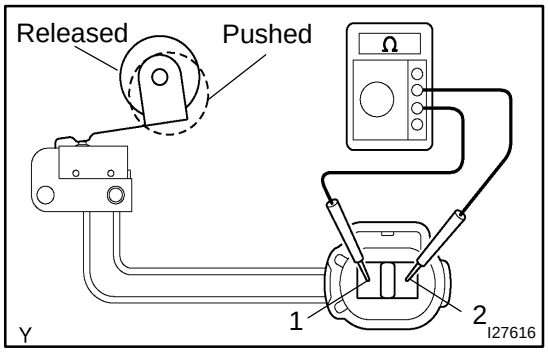

6. INSPECT WINDOW LIMIT SWITCH CONTINUITY

Switch position	Tester Connection	Specified Condition
Lever pushed	1 − 2	No continuity
Lever released	1 − 2	Continuity

If the continuity is not as specified, replace the power back window regulator and motor assembly.

BACK POWER WINDOW SYSTEM (Double Cab)

BE2LX−01

LOCATION

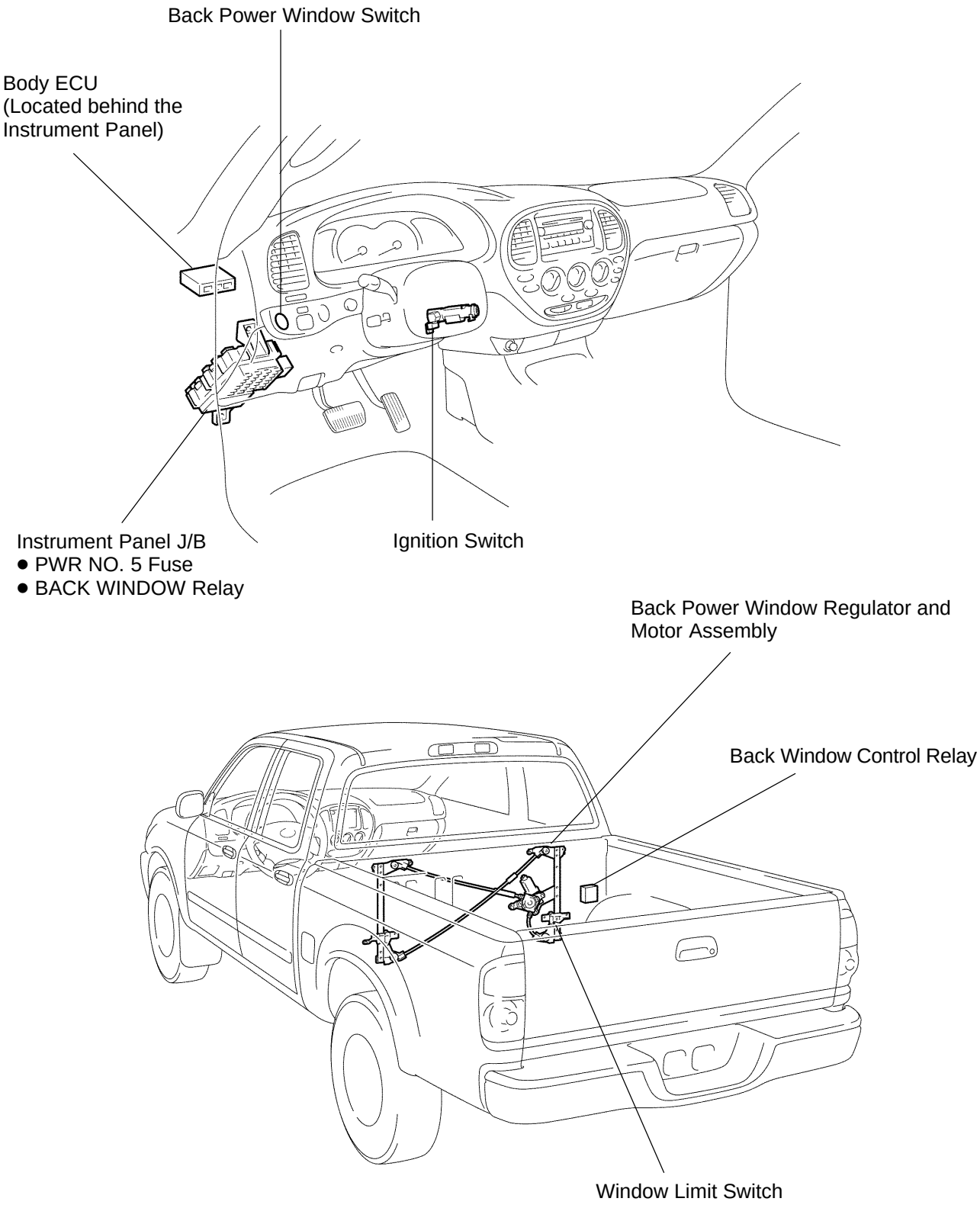

BE038−08

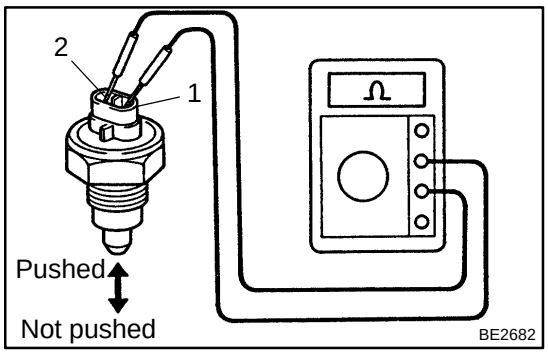

INSPECTION

1. M/T:

INSPECT BACK−UP LIGHT SWITCH CONTINUITY

Condition	Tester Connection	Specified Condition
Not pushed	1 − 2	No continuity
Pushed	1 − 2	Continuity

If the continuity is not as specified, replace the switch.

2. A/T:

INSPECT PARK/NEUTRAL POSITION SWITCH CONTINUITY (See page DI−993 or DI−1159)

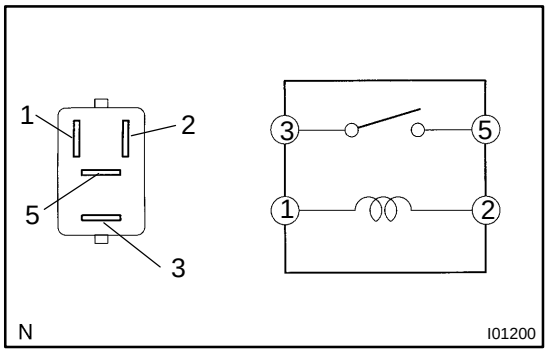

3. A/T:

INSPECT BACK−UP LIGHT RELAY CONTINUITY

Tester Connection	Specified Condition
3 − 5	No Continuity
3 − 5	Continuity (When battery voltage is applied to terminals 1 and 2)

If the continuity is not as specified, replace the relay.

BACK−UP LIGHT SYSTEM

BE2LS−01

LOCATION

Double Cab

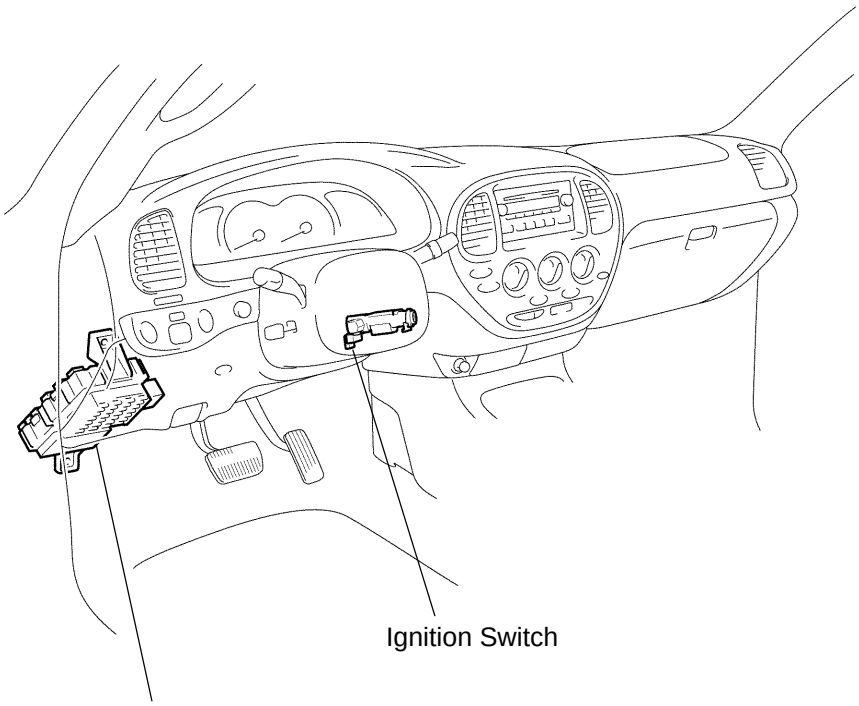

Instrument Panel J/B
- BACK−UP LIGHT Relay
- GAUGE Fuse

Rear Combination Light
- Back−up Light

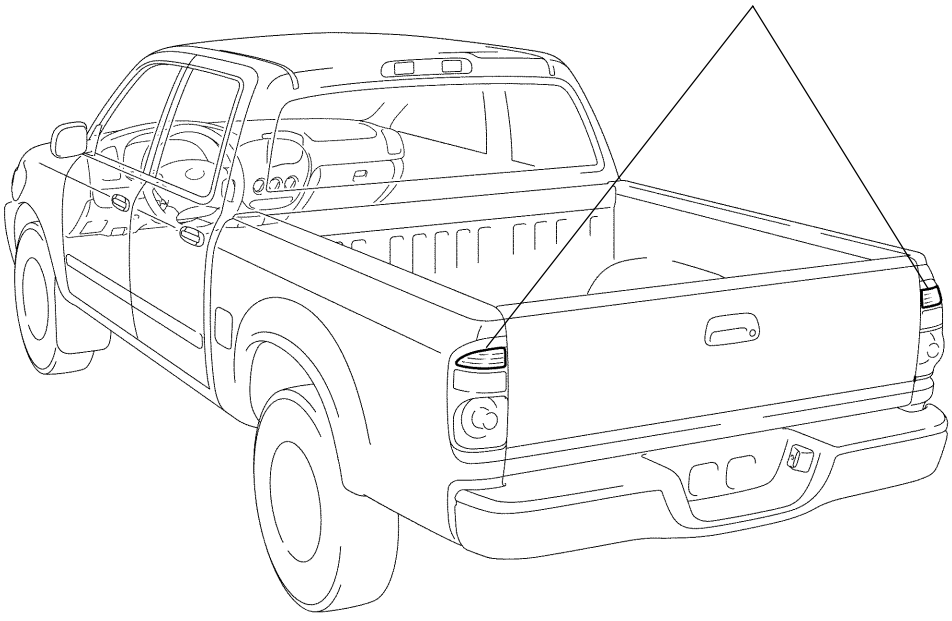

P

I27619

Except Double Cab

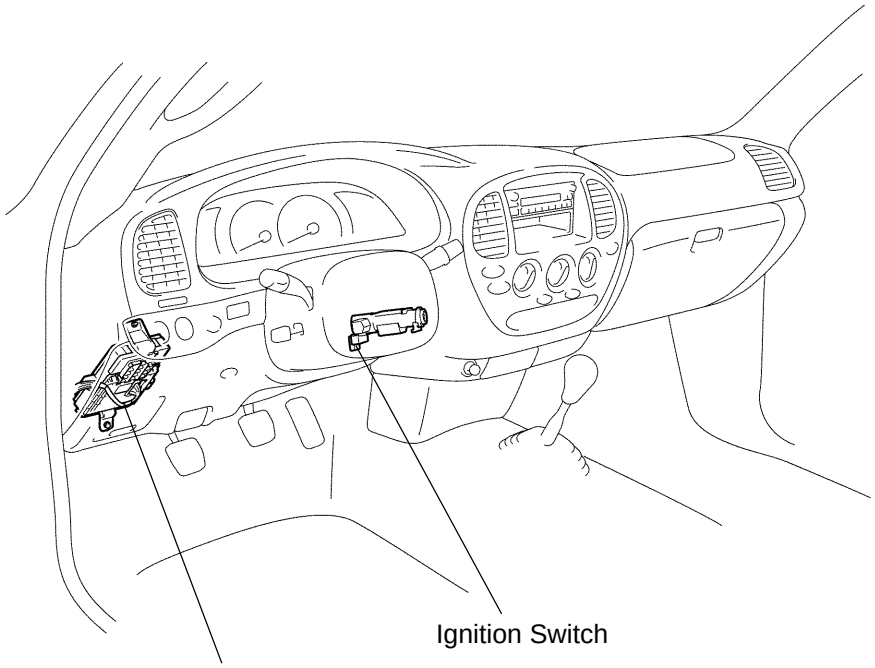

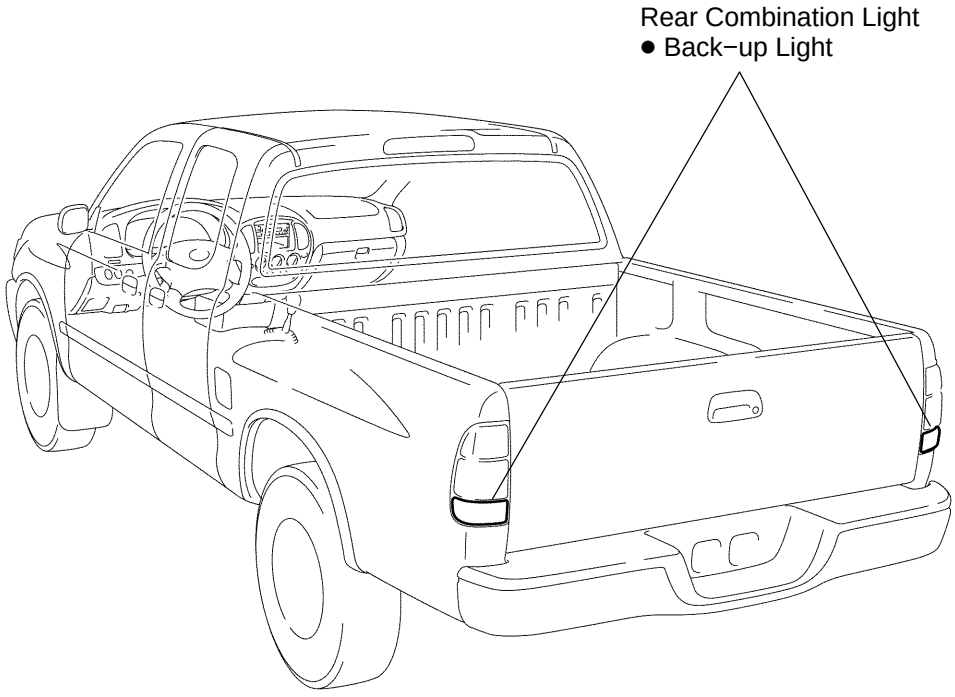

P I25228

I27621

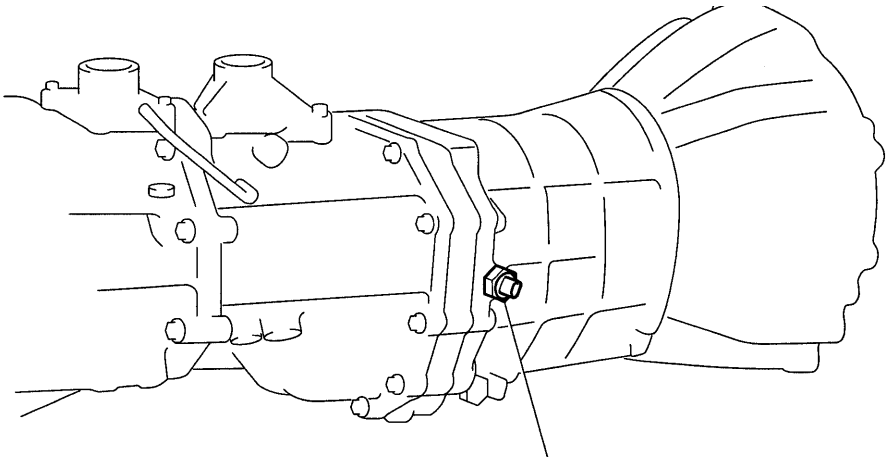

M/T:
Back−up Light Switch

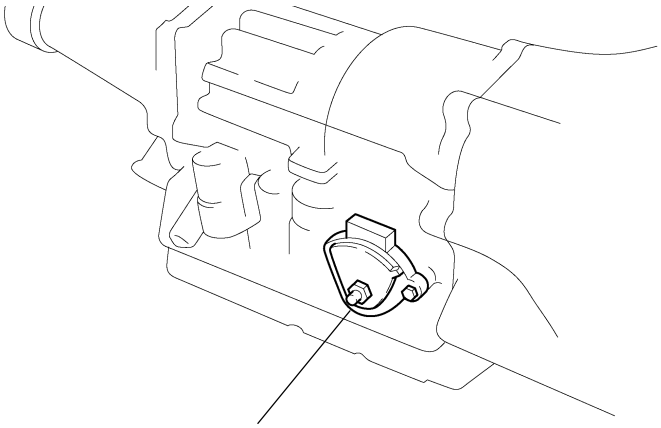

A/T:
Park/neutral Position Switch

I27167

CLOCK

BE03N−13

TROUBLESHOOTING

HINT:

Troubleshoot the clock according to the table below.

Problem	No.
Clock does not operate	1
Clock loses or gains time	2

± 1.5 seconds/day

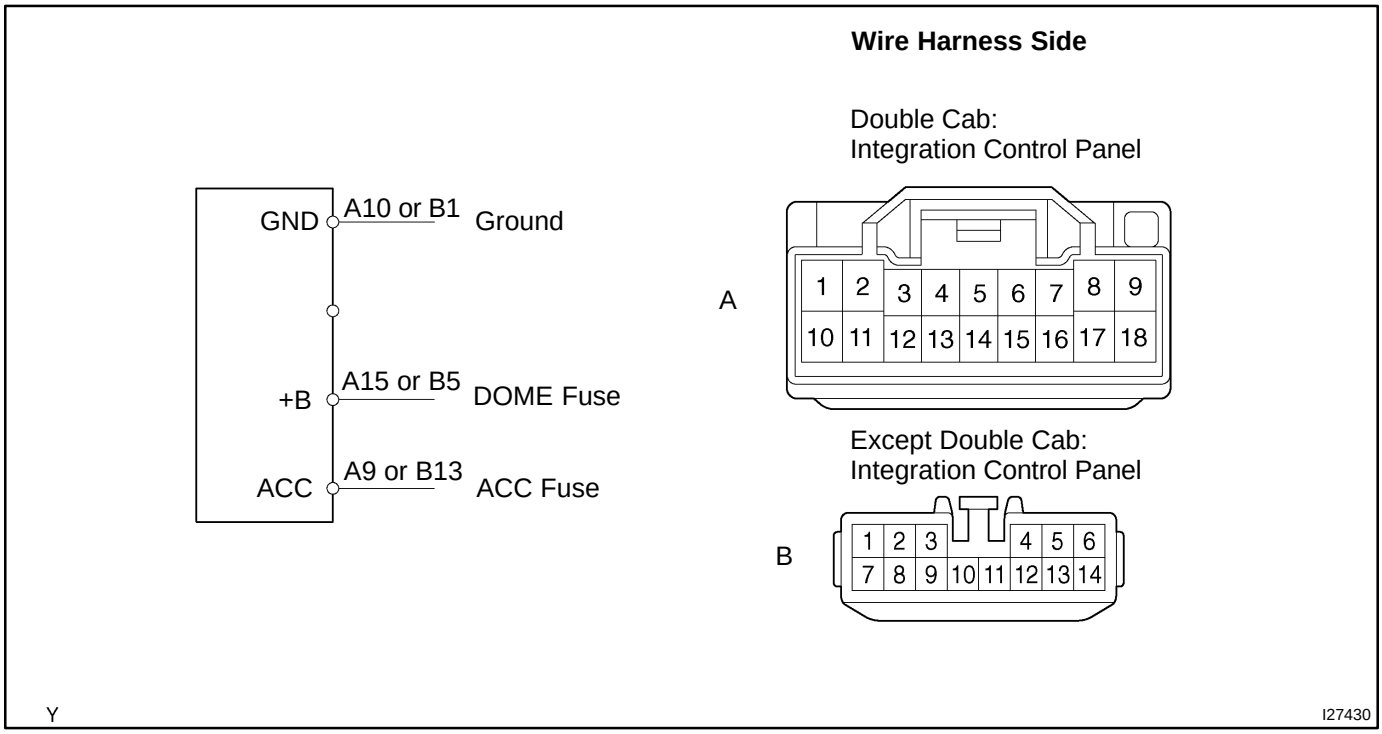

1. PROBLEM NO. 1

1	CLOCK DOES NOT OPERATE

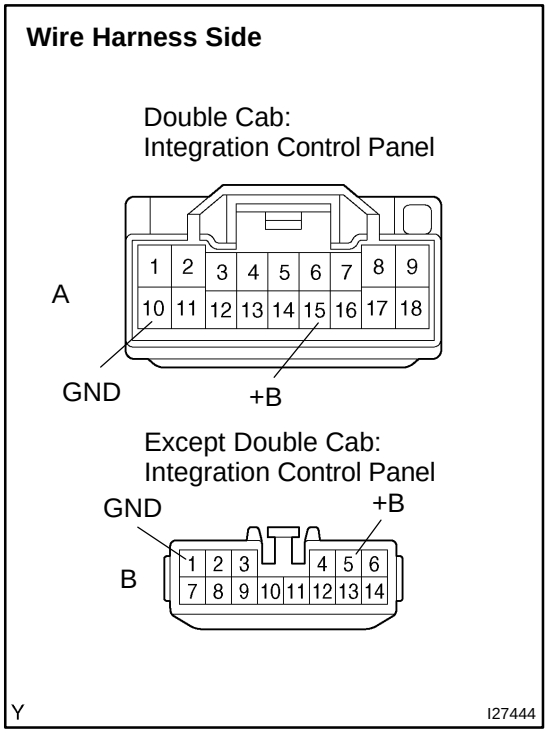

(a) Check that the battery positive voltage is between 10 to 14 V.

If voltage is not as specified, replace the battery.

(b) Check that the DOME fuse is not blown.

If the fuse is blown, replace the fuse and check for short.

(c) Troubleshoot the clock as follows.

HINT:

Inspect the connector on the wire harness side.

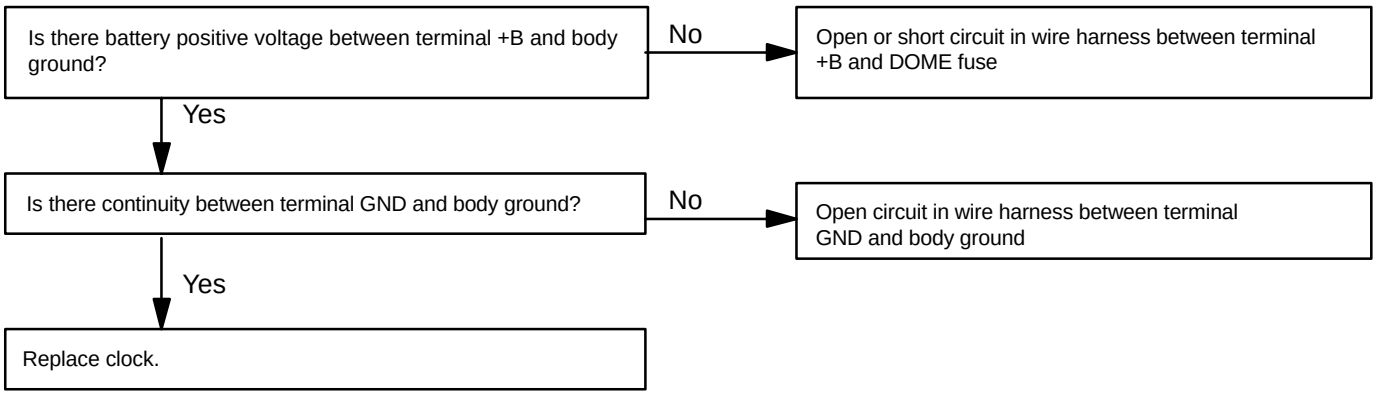

2. PROBLEM NO. 2

2	CLOCK LOSES OR GAINS TIME

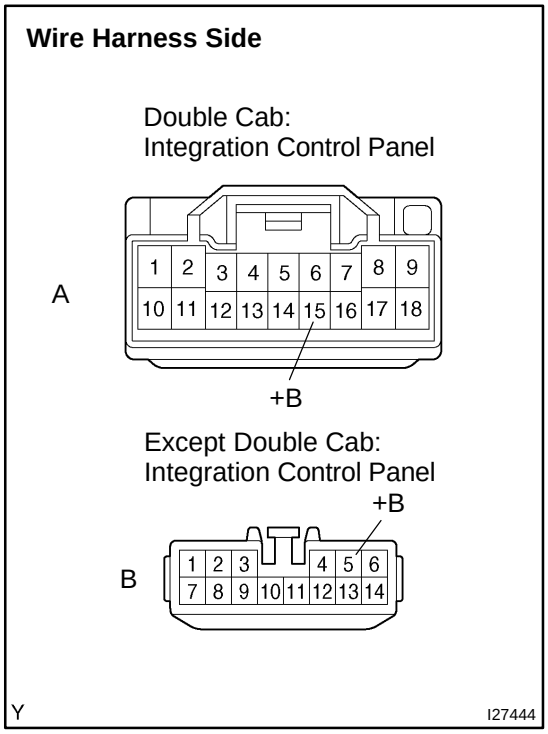

(a) Check that the battery positive voltage is between 10 to 14 V.

If voltage is not as specified, replace the battery.

(b) Inspect the error of the clock.

Allowable error (per day): ± 1.5 seconds

If the error exceeds the allowable error, replace the clock.

(c) Check that the clock adjusting button is stuck in position and has failed to return.

If the error exceeds the allowable error, replace the clock.

(d) Troubleshoot the clock as follows.

HINT:

Inspect the connector on the wire harness side.

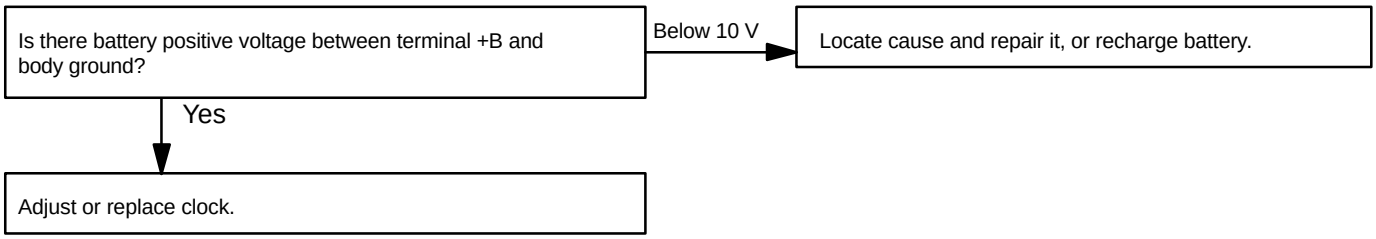

BE2L2−01

INSPECTION

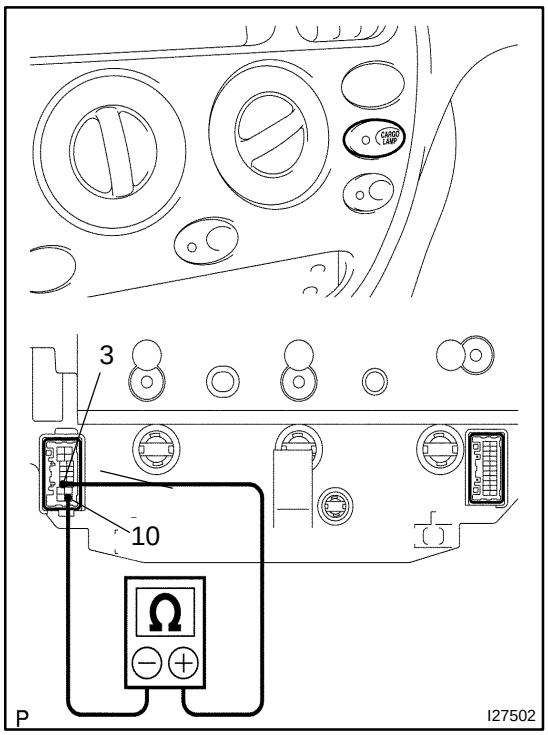

1. INSPECT CARGO LIGHT SWITCH CONTINUITY

(a) Remove the integration control panel.

(b) Check that continuity exists between terminals 3 and 10 with the switch ON.

(c) Check that no continuity exists between terminals 3 and 10 with the switch OFF.

If the continuity is not as specified, replace the panel.

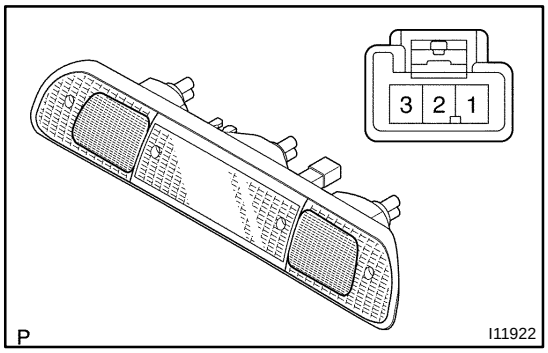

2. INSPECT CARGO LIGHT ASSEMBLY CONTINUITY

Using an ohmmeter, check that continuity exists between terminals 3 and 2.

If the continuity is not as specified, replace the bulb or the stop light assembly.

CARGO LIGHT SYSTEM (Double Cab)

BE2L1−01

LOCATION

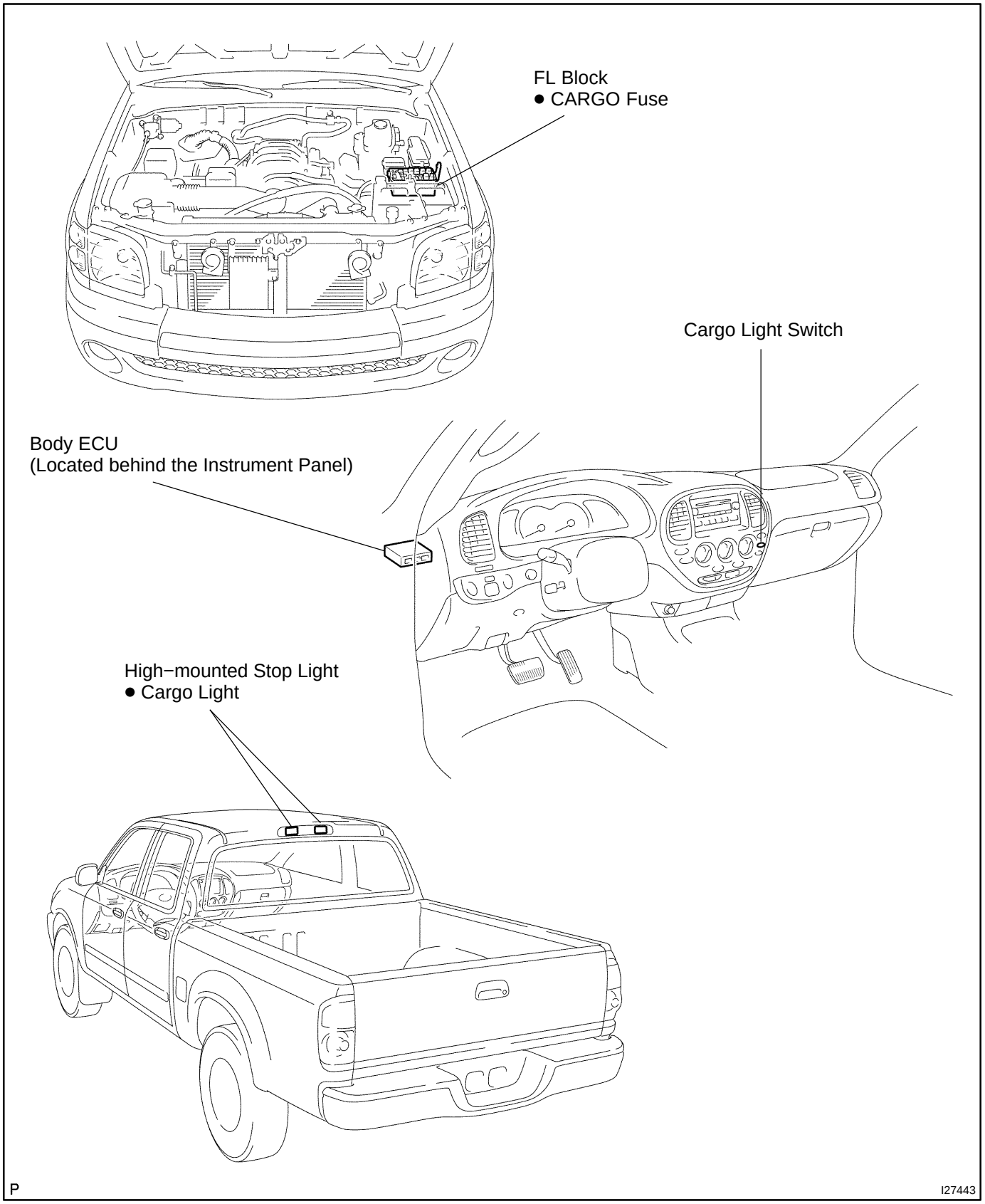

BE2L4−01

INSPECTION

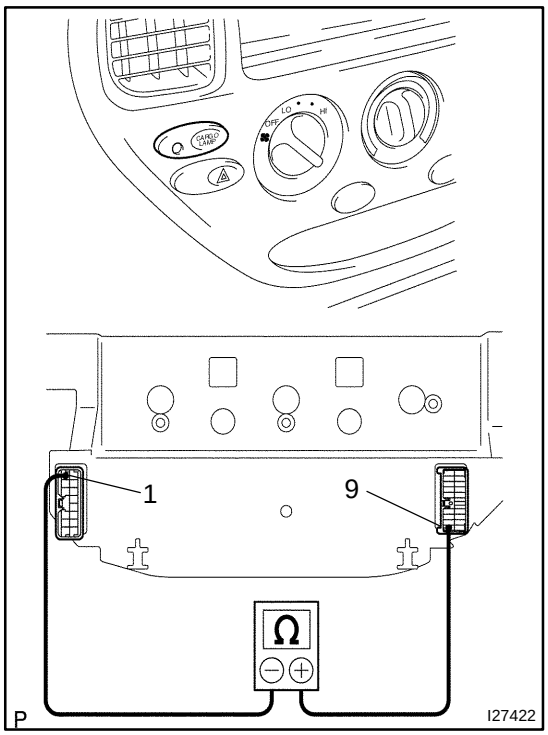

1. INSPECT CARGO LIGHT SWITCH CONTINUITY

(a) Remove the integration control panel.

(b) Check that continuity exists between terminals 9 and 1 with the switch ON.

(c) Check that no continuity exists between terminals 9 and 1 with the switch OFF.

If the continuity is not as specified, replace the panel.

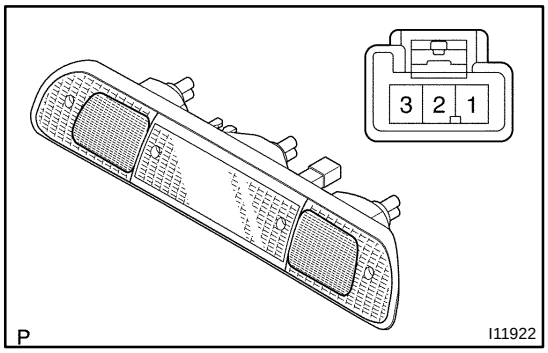

2. INSPECT CARGO LIGHT ASSEMBLY CONTINUITY

Using an ohmmeter, check that continuity exists between terminals 3 and 2.

If the continuity is not as specified, replace the bulb or the stop light assembly.

CARGO LIGHT SYSTEM (Except Double Cab)

BE2L3−01

LOCATION

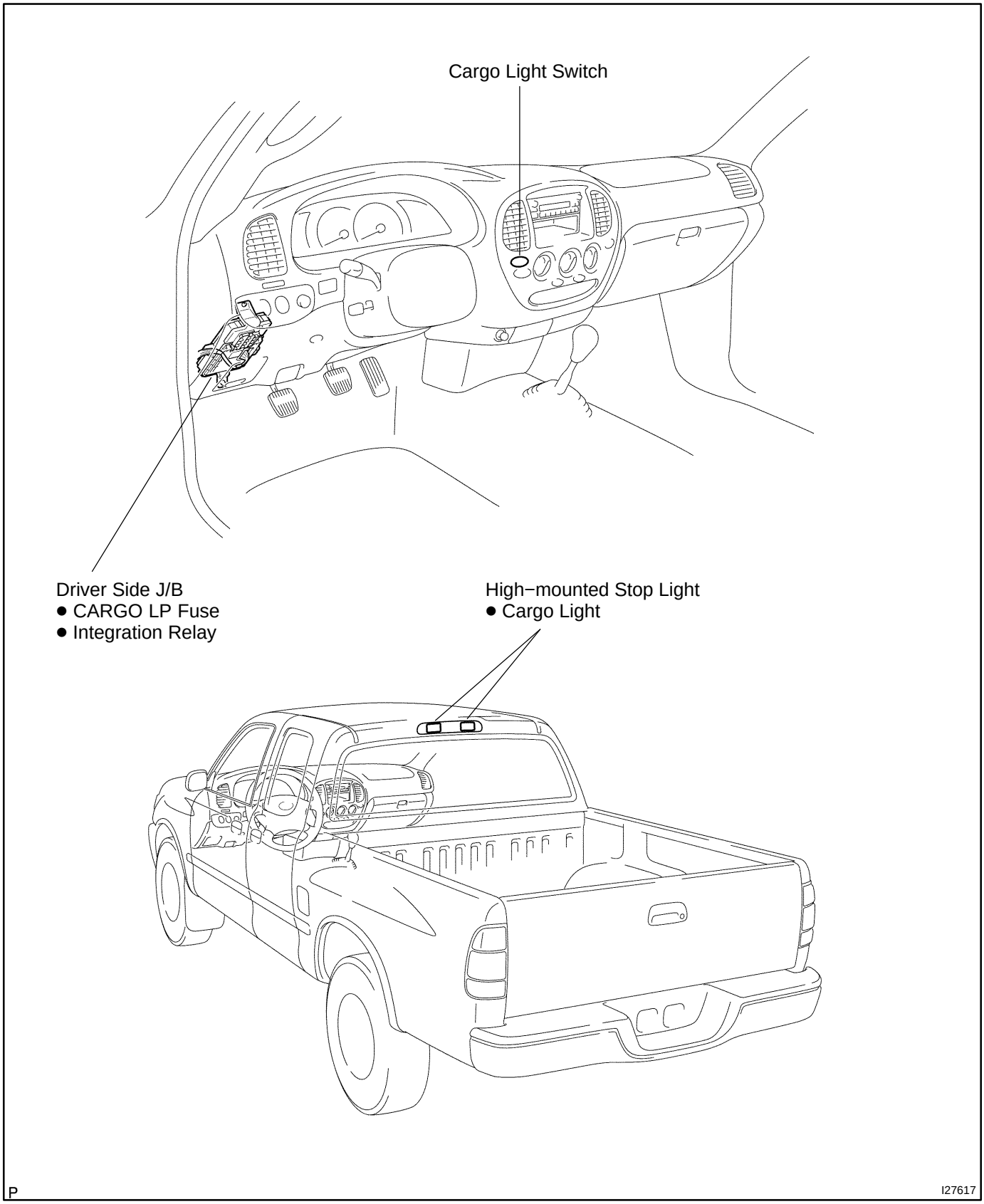

BE2MD−01

CIRCUIT

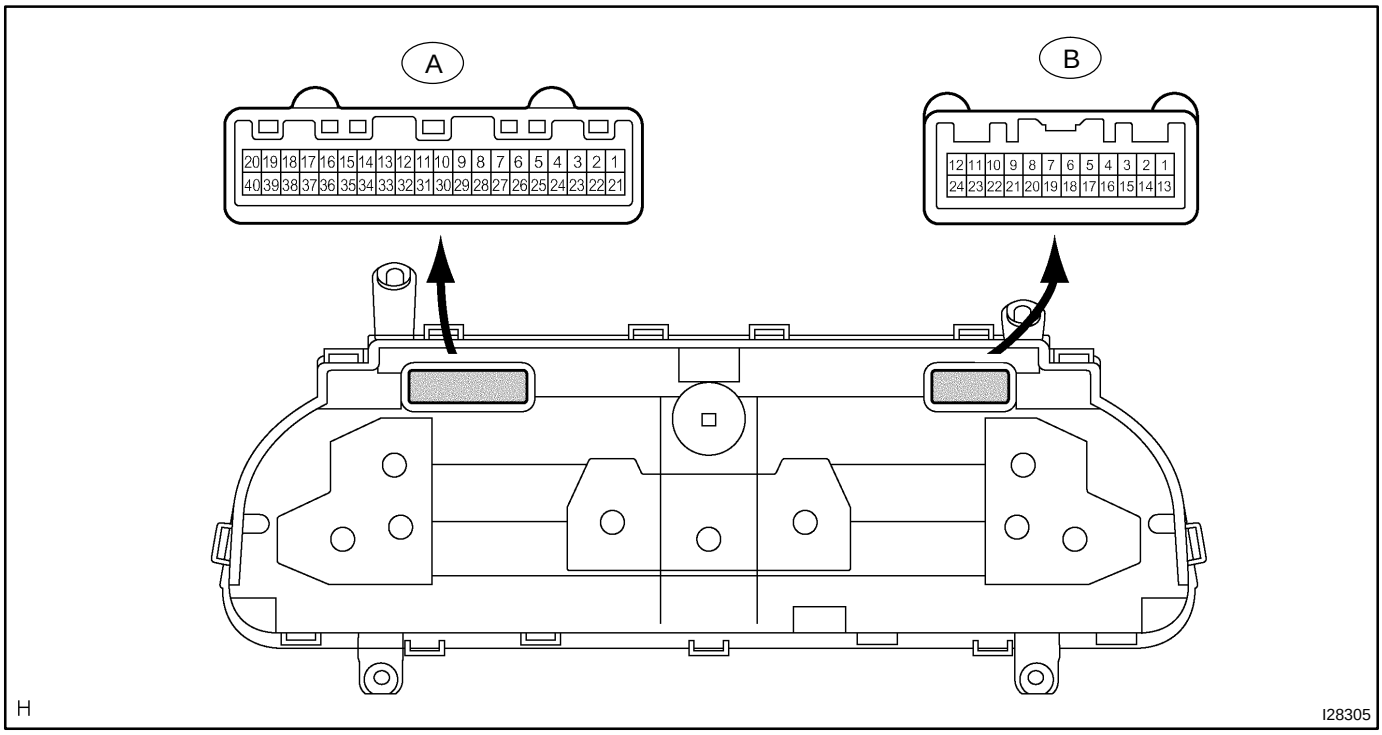

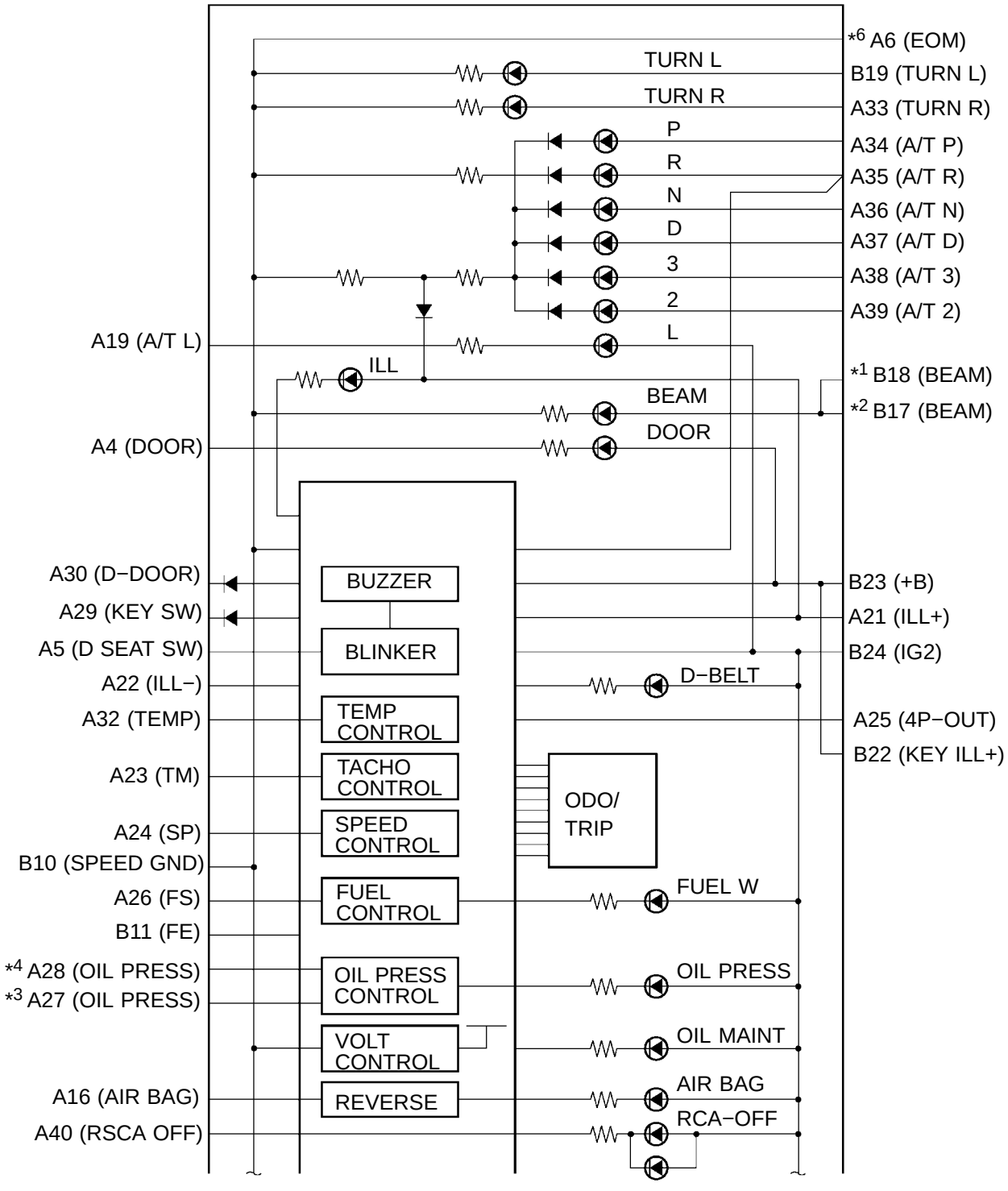

H

*1 w/ DRL *2 w/o DRL *3 2UZ−FE *4 1GR−FE

CMC012

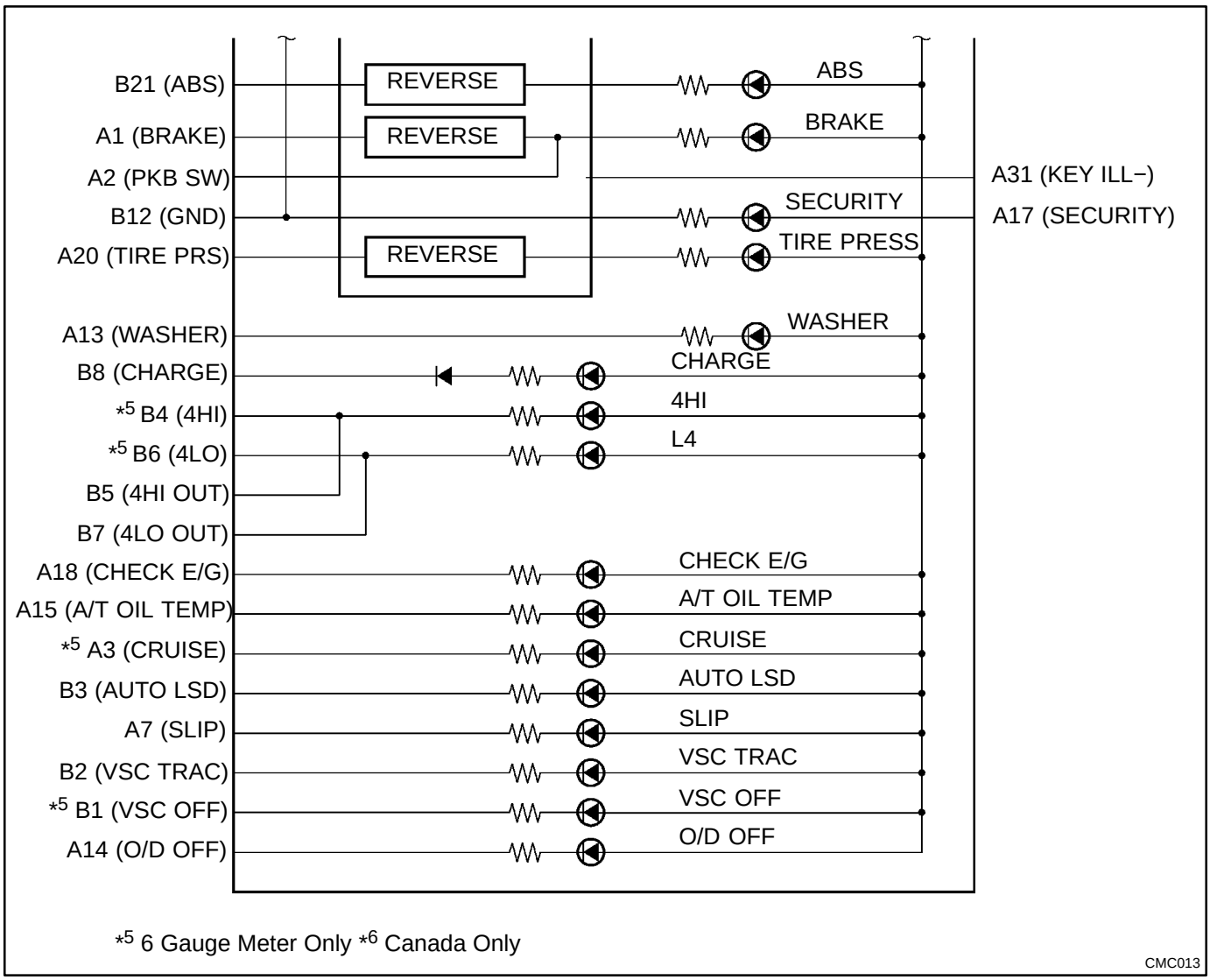
B21 (ABS)
A1 (BRAKE)
A2 (PKB SW)
B12 (GND)
A20 (TIRE PRS)
REVERSE
REVERSE
REVERSE
ABS
BRAKE
SECURITY
TIRE PRESS
A31 (KEY ILL−)
A17 (SECURITY)
A13 (WASHER)
B8 (CHARGE)
*5 B4 (4HI)
*5 B6 (4LO)
B5 (4HI OUT)
B7 (4LO OUT)
WASHER
CHARGE
4HI
L4
A18 (CHECK E/G)
A15 (A/T OIL TEMP)
*5 A3 (CRUISE)
B3 (AUTO LSD)
A7 (SLIP)
B2 (VSC TRAC)
*5 B1 (VSC OFF)
A14 (O/D OFF)
CHECK E/G
A/T OIL TEMP
CRUISE
AUTO LSD
SLIP
VSC TRAC
VSC OFF
O/D OFF
*5 6 Gauge Meter Only *6 Canada Only
CMC013

Terminal No.		Wire Harness Side
A	1	*1 Brake Actuator Assy (ABS)
		*2 ABS & Traction Actuator Assy (VSC)
	2	Brake Fluid Level Warning Switch
		Parking Brake Switch
	3	ECM
	4	Body ECU
	5	Front Seat Inner Belt Assy (Driver side)
	6	*3 ECM
	7	ABS & Traction Actuator Assy (VSC)
	13	Washer Level Warning Switch
	14	ECM
	15	ECM
	16	Airbag Sensor Assy Center
	17	Body ECU/Immobiliser ECU
	18	ECM
	19	ECM
	20	Tire Pressure ECU
	21	TAIL Fuse
	22	Light Control Rheostat
	23	ECM
	24	*1 Brake Actuator Assy (ABS)
		*2 ABS & Traction Actuator Assy (VSC)
		*4 Vehicle Speed Sensor
	25	4P−OUT
	26	Fuel Sender Gauge
	27	*5 Low Oil Pressure Sensor
	28	*6 Low Oil Pressure Switch
	29	Key Unlock Warning Switch
	30	Door Courtesy Switch
	31	Key Illumination
	32	ECM
	33	Flasher Relay
	34	Park/Neutral Position Switch
	35	Park/Neutral Position Switch
	36	Park/Neutral Position Switch
	37	Park/Neutral Position Switch
	38	Park/Neutral Position Switch
	39	Park/Neutral Position Switch
	40	Airbag Sensor Assy Center

Terminal No.		Wire Harness Side
B	1	ABS & Traction Actuator Assy (VSC)
	2	ABS & Traction Actuator Assy (VSC)
	3	ABS & Traction Actuator Assy (VSC)
	4	Transfer Control ECU
	5	Transfer Indicator (4 Hi)
	6	Transfer Control ECU
	7	Transfer Indicator (4 Lo)
	8	Generator
	10	Vehicle Speed Sensor
	11	Fuel Sender Gauge Assy
	12	Body Ground
	17	*7 Headlight Assy
	18	*8 Body ECU
	19	Flasher Relay
	21	*1 Brake Actuator Assy (ABS)
		*2 ABS & Traction Actuator Assy (VSC)
	22	Key Illumination
	23	DOME Fuse
	24	IGN1 Fuse

*1 w/o VSC
*2 w/ VSC
*3 CANADA
*4 M/T
*5 for 2UZ−FE
*6 for 1GR−FE
*7 w/o DRL
*8 w/ DRL

BE2ME−01

INSPECTION

1. INSPECT SPEEDOMETER ON−VEHICLE

Using a speedometer tester, check the speedometer for indication error and check operation of the odometer.

HINT:

Tire wear and tire over or under inflation will increase the indication error.

USA (mph)		CANADA (km/h)	
Standard Indication	Allowable Range	Standard Indication	Allowable Range
20	19 to 22	20	17.5 to 21.5
40	39 to 42.5	40	38 to 42
60	59.5 to 63.5	60	58 to 63
80	79.5 to 84	80	78 to 84
100	100 to 105	100	98.5 to 104.5
−		120	119 to 125
−		140	139 to 146
−		160	159 to 167

If the error is excessive, replace the speedometer.

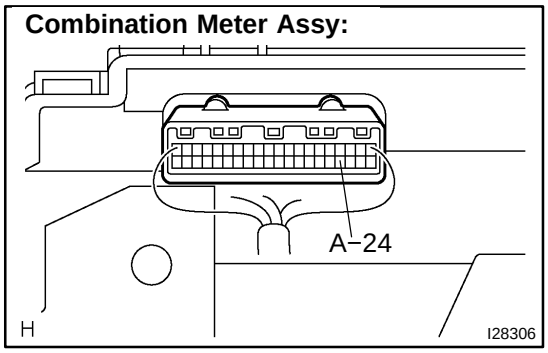

2. INSPECT INPUT VEHICLE SPEED SIGNAL WAVEFORM (A/T)

(a) Remove the combination meter with connectors still connected.

(b) Connect the oscilloscope to terminal A−24 and body ground.

(c) Start the engine.

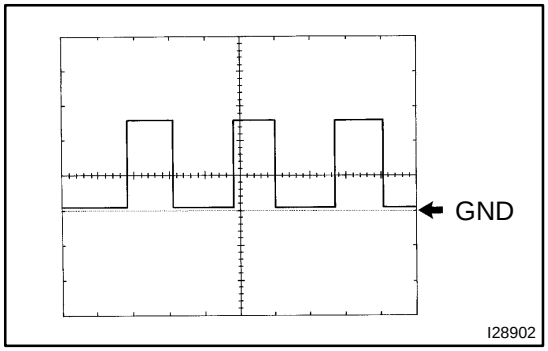

(d) Check the signal waveform according to the condition(s) in the table below.

Item	Condition
Tool setting	5 V/DIV, 20 ms/DIV
Vehicle condition	Driving at approx. 20 km/h (12 mph)

OK:

As shown in the illustration

HINT:

As vehicle speed increases, the cycle of the signal waveform narrows.

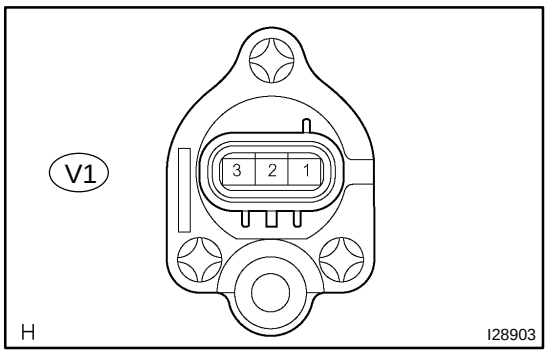

3. INSPECT INPUT VEHICLE SPEED SIGNAL WAVEFORM (M/T)

(a) Shift the shift lever to neutral.

(b) Jack up either of the front wheel.

(c) Turn the ignition switch to ON.

(d) Measure the voltage between terminals 2 and 3 of speed sensor when the front wheel is turning slowly.

Standard voltage:

Voltage is generated intermittently.

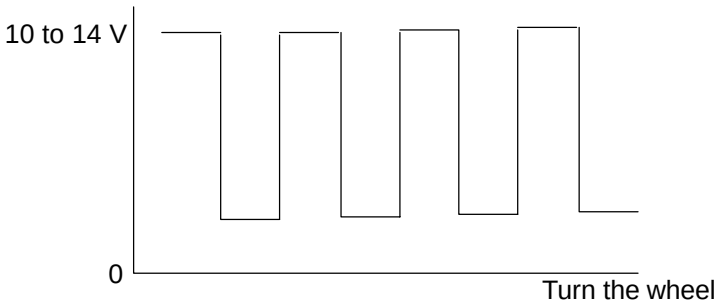

4. INSPECT TACHOMETER ON−VEHICLE

(a) Connect a tune−up test tachometer, and start the engine.

NOTICE:

- **Reversing the connection of the tachometer will damage the transistors and diodes inside the tachometer.**
- **When removing or installing the tachometer, be careful not to drop or subject it to heavy shocks.**

(b) Compare the tester and tachometer indications.

DC 13.5 V at 20˚C (68˚F)

2UZ−FE		1GR−FE	
Standard Indication	Allowable Range	Standard Indication	Allowable Range
700	630 to 770	700	630 to 770
1,000	900 to 1,100	1,000	900 to 1,000
2,000	1,875 to 2,125	2,000	1,850 to 2,150
3,000	2,850 to 3,150	3,000	2,800 to 3,200
4,000	3,850 to 4,150	4,000	3,800 to 4,200
5,000	4,850 to 5,150	5,000	4,800 to 5,100
6,000	5,820 to 6,180	6,000	5,750 to 6,250

If the error is excessive, replace the tachometer.

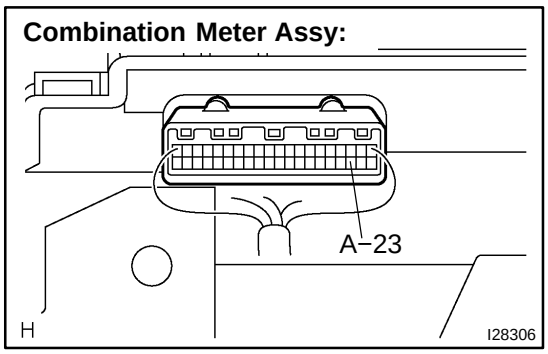

5. INSPECT INPUT TACHO SIGNAL WAVEFORM

(a) Remove the combination meter with connector still connected.

(b) Connect the oscilloscope to terminal A−23 and body ground.

(c) Start the engine.

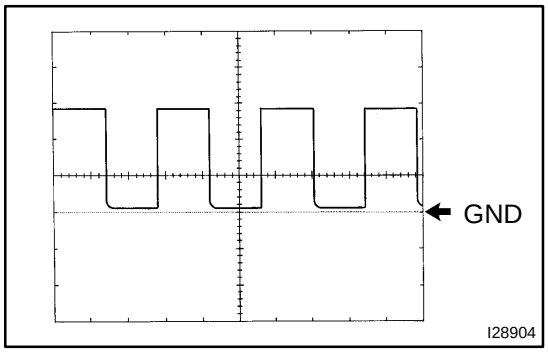

(d) Check the signal waveform according to the condition(s) in the table below.

Item	Condition
Tool setting	5 V/DIV, 10 ms/DIV
Vehicle condition	Engine idle speed

OK:

As shown in the illustration

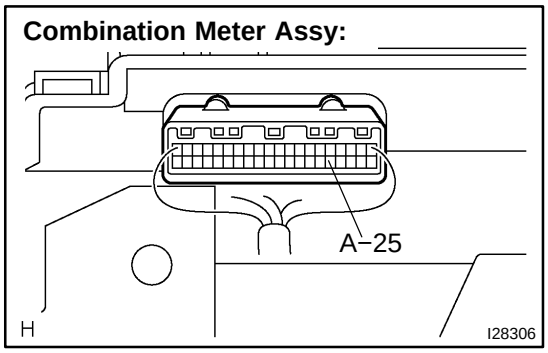

6. INSPECT OUTPUT TACHO SIGNAL WAVEFORM

(a) Remove the combination meter with connector still connected.

(b) Connect the oscilloscope to terminal A−25 and body ground.

(c) Start the engine.

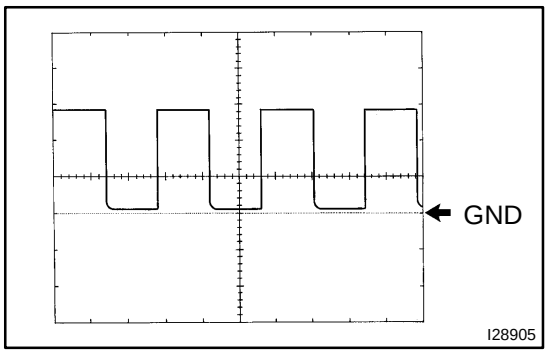

(d) Check the signal waveform according to the condition(s) in the table below.

Item	Condition
Tool setting	5 V/DIV, 10 ms/DIV
Vehicle condition	Engine idle speed

OK:

As shown in the illustration

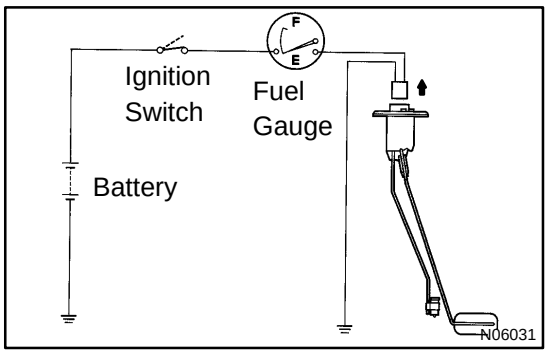

7. INSPECT FUEL RECEIVER GAUGE OPERATION

(a) Disconnect the connector from the sender gauge.

(b) Turn the ignition switch ON, and check that the receiver gauge needle indicates EMPTY.

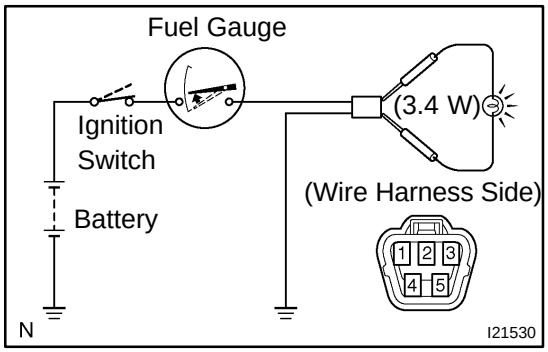

(c) Connect terminals 2 and 3 of the wire harness side connector through a 3.4 W test bulb.

(d) Turn the ignition switch ON, and check that the bulb lights up and the receiver gauge needle moves towards the full side.

HINT:

Because of the silicon oil in the gauge, it will take a short time for needle to stabilize.

If the operation is not as specified, inspect the receiver gauge resistance.

8. INSPECT FUEL SENDER GAUGE RESISTANCE

Measure the resistance between terminals 2 and 3 at each float position.

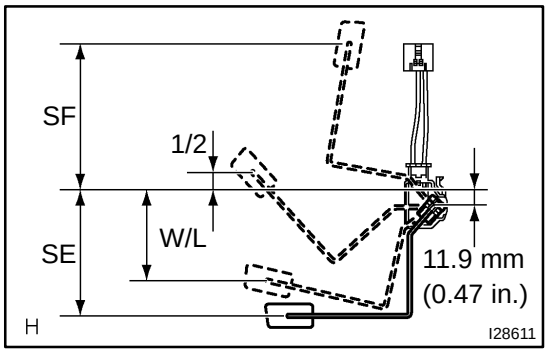

Float Position mm (in.)	Resistance (Ω)
SF: Approx. 116.5 (4.59) ± 2.5 (0.10)	Approx. 4.0
1/2: Approx. 14 (0.55)	Approx. 59.0
W/L: Approx. 72.2 (2.84)	Approx. 98.8
SE: Approx. 100 (3.90) ± 2.5 (0.10)	Approx. 110.0 ± 2.5

If the resistance value is not as specified, replace the fuel sender gauge.

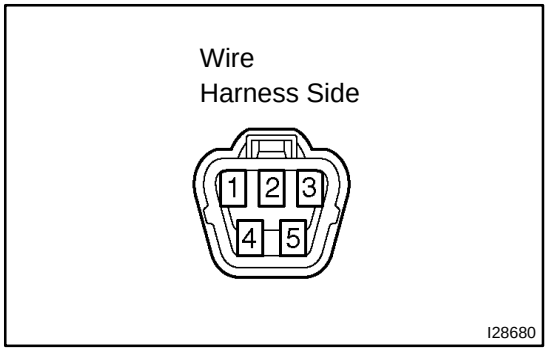

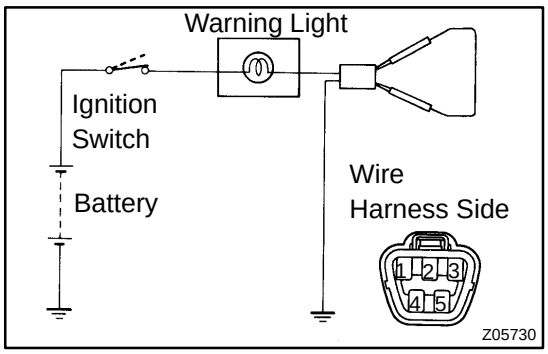

9. INSPECT FUEL LEVEL WARNING LIGHT

(a) Disconnect the connector from the sender gauge.

(b) Connect terminals 1 and 3 of the wire harness side connector.

(c) Turn the ignition switch ON, and check that the warning light lights up.

If the warning light does not light up, inspect the bulb or wire harness.

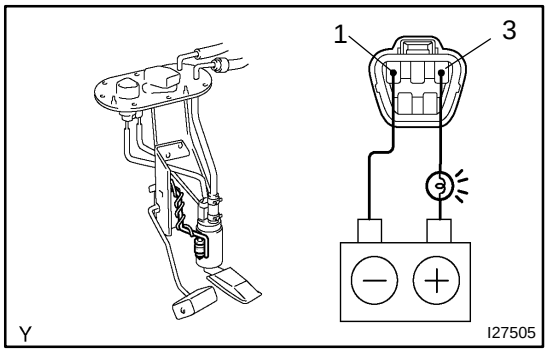

10. INSPECT FUEL LEVEL WARNING SWITCH

(a) Apply battery voltage between terminals 1 and 3 through a 3.4 W test bulb, and check that the bulb lights up.

HINT:

It will take a short time for the bulb to light up.

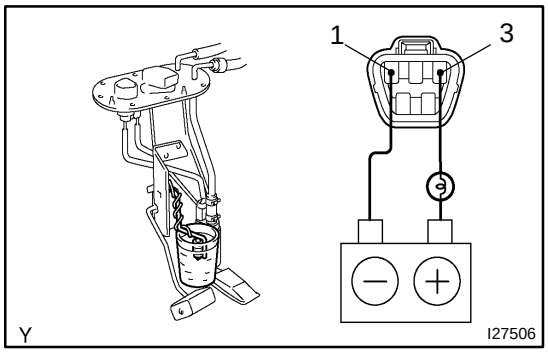

(b) Submerge the switch in fuel, and check that the bulb turns off.

If operation is not as specified, replace the sender gauge.

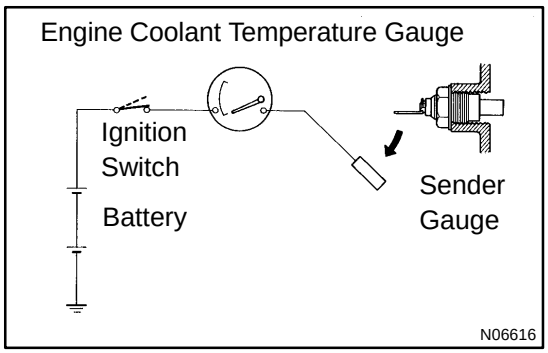

11. INSPECT ENGINE COOLANT TEMPERATURE RECEIVER GAUGE OPERATION

(a) Disconnect the connector from the sender gauge.

(b) Turn the ignition switch ON, and check that the receiver gauge needle indicates cool side.

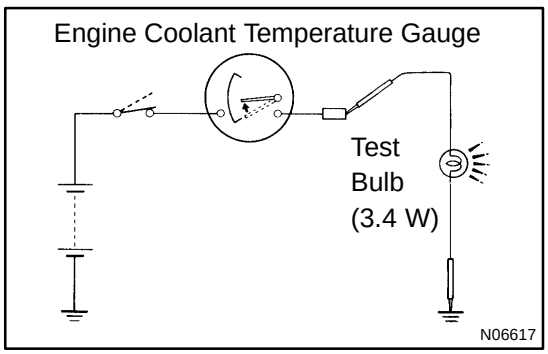

(c) Ground the terminal of the wire harness side connecter through a 3.4 W test bulb.

(d) Turn the ignition switch ON, check that the bulb lights up and the receiver gauge needle moves to the hot side.

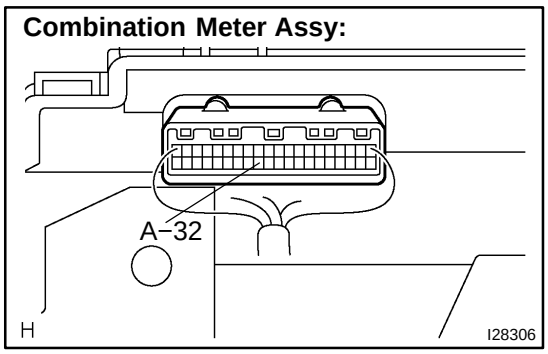

12. INSPECT INPUT ENGINE COOLANT TEMPERATURE SIGNAL WAVEFORM

(a) Remove the combination meter with connectors still connected.

(b) Connect the oscilloscope to terminal A32 and body ground.

(c) Start the engine.

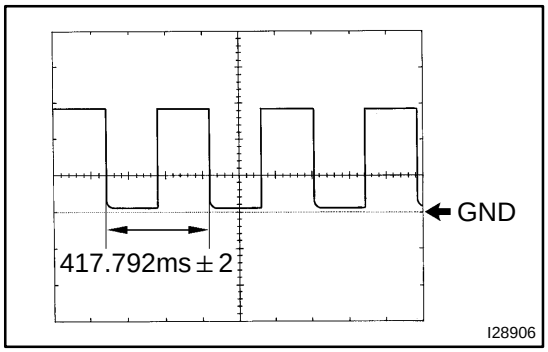

(d) Check the signal waveform according to the condition(s) in the table below.

Item	Condition
Tool setting	5 V/DIV, 10 ms/DIV
Vehicle condition	Ignition switch ACC or ON

OK:

As shown in the illustration

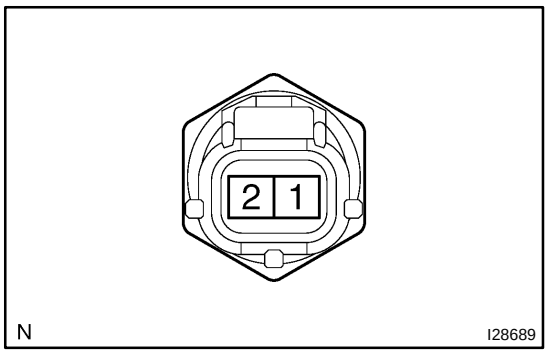

13. INSPECT ENGINE COOLANT TEMPERATURE SENDER GAUGE RESISTANCE

(a) Disconnect the connector from the engine coolant temperature sender gauge.

(b) Measure the resistance according to the value(s) in the table below.

Temperature °C (°F)	Resistance (kΩ)
−20 (−4)	13.54 to 16.63
20 (68)	2.28 to 2.63
80 (176)	0.31 to 0.33
110 (230)	0.13 to 0.15

If the resistance value is not as specified, replace the sender gauge.

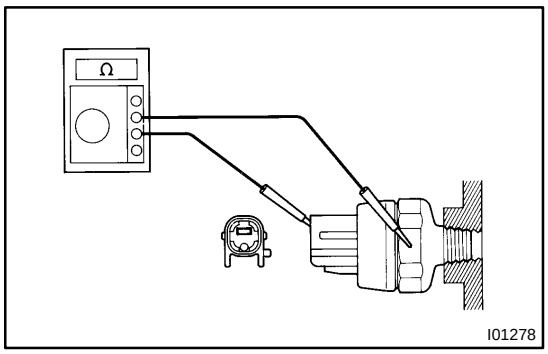

14. 1GR−FE (Standard cab): INSPECT OIL PRESSURE SWITCH CONTINUITY

(a) Disconnect the connector from the switch.
(b) Check that continuity exists between the terminal and ground with the engine stopped.
(c) Check that no continuity exists between the terminal and ground with the engine running.

HINT:
The oil pressure should be over 24.5 kPa (0.25 kgf/cm^2, 3.55 psi).
If the continuity is not as specified, replace the switch.

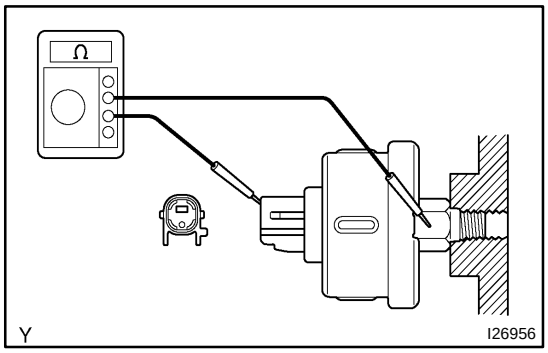

15. 1GR−FE (Access cab) and 2UZ−FE: INSPECT OIL PRESSURE SENDER GAUGE CONTINUITY

(a) Disconnect the connector from the sender gauge.
(b) Check that no continuity exists between the terminal and ground with the engine stopped.
(c) Check that continuity exists between the terminal and ground with the engine running.

HINT:
The oil pressure should be over 29.0 kPa (0.3 kgf/cm^2, 4.2 psi).
If the continuity is not as specified, replace the seder gauge.

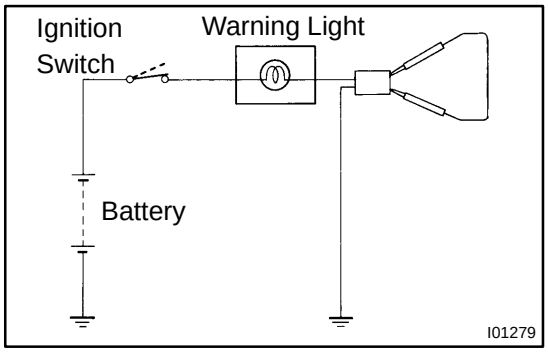

16. INSPECT BRAKE WARNING LIGHT

(a) Disconnect the connector from the brake fluid warning switch.
(b) Release the parking brake pedal.
(c) Connect the terminals on the harness side of the level warning switch connector.
(d) Start the engine, and check that the warning light lights up.

If the warning light does not light up, inspect the bulb or wire harness.

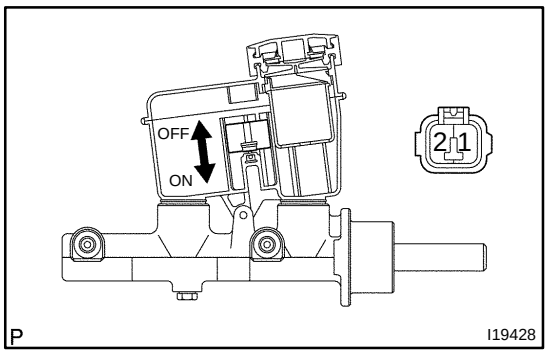

17. INSPECT BRAKE FLUID LEVEL WARNING SWITCH CONTINUITY

(a) Remove the reservoir tank cap and strainer.
(b) Disconnect the connector.
(c) Check that no continuity exists between the terminals with the switch OFF (float).
(d) Use siphon to take fluid out of the reservoir tank.
(e) Check that continuity exists between the terminals with the switch ON (sink).

If the continuity is not as specified, replace the switch.

(f) Pour the fluid back in the reservoir tank.

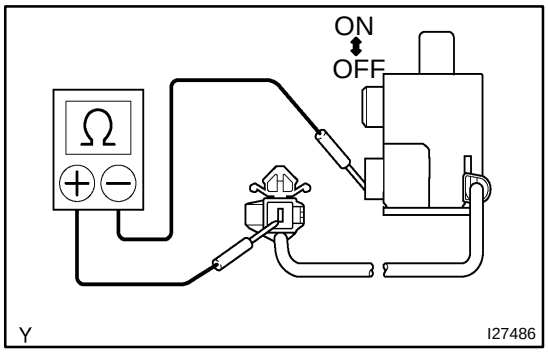

18. Double cab:
INSPECT PARKING BRAKE SWITCH CONTINUITY

(a) Check that there is continuity between the terminal and switch body with the switch ON (switch pin released).
(b) Check that there is no continuity between the terminals with the switch OFF (switch pin pushed in).

If the continuity is not as specified, replace the switch.

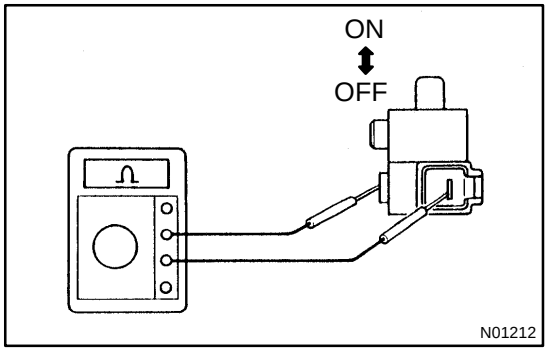

19. Except double cab (A/T):
INSPECT PARKING BRAKE SWITCH CONTINUITY

(a) Check that there is continuity between the terminal and switch body with the switch ON (switch pin released).
(b) Check that there is no continuity between the terminals with the switch OFF (switch pin pushed in).

If the continuity is not as specified, replace the switch.

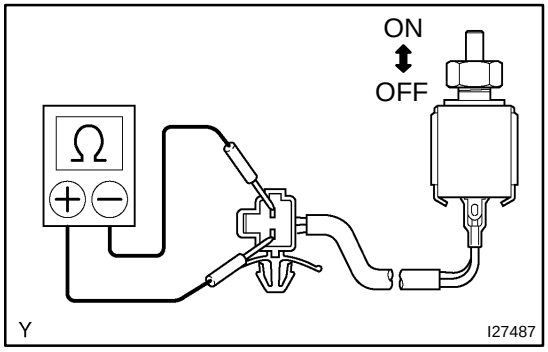

20. Except double cab (M/T):
INSPECT PARKING BRAKE SWITCH CONTINUITY

(a) Check that there is continuity between the terminals with the switch ON (switch pin released).
(b) Check that there is no continuity between the terminals with the switch OFF (switch pin pushed in).

If the continuity is not as specified, replace the switch.

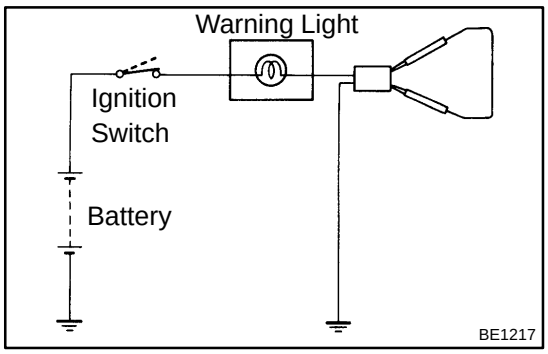

21. INSPECT WASHER LEVEL WARNING LIGHT

(a) Disconnect the connectors from the level warning switch.
(b) Connect the terminals of the wire harness side of the level warning switch connector.
(c) Turn the ignition switch ON, and check that the warning light turns on.

If the warning light does not turn on, inspect the bulb.

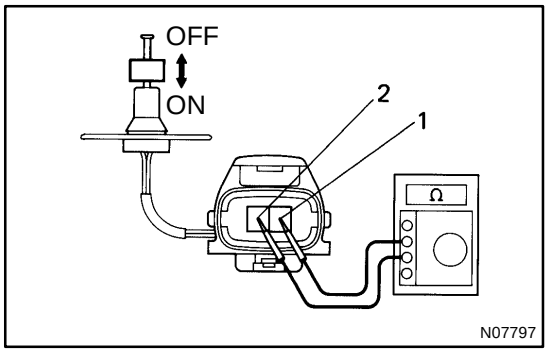

22. INSPECT WASHER LEVEL SWITCH CONTINUITY

(a) Check that there is no continuity between the terminals with the switch OFF (float).
(b) Check that there is continuity between the terminals with the switch ON (sink).

If the continuity is not as specified, replace the switch.

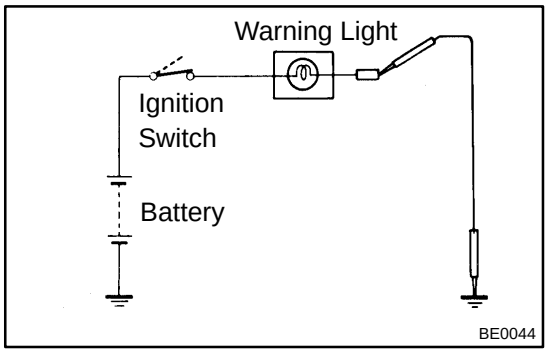

23. INSPECT DRIVER'S SEAT BELT WARNING LIGHT

(a) Disconnect connector B from the combination meter.
(b) Connect the negative (−) lead from the battery to terminal 9.
(c) Turn the ignition switch ON and check that the warning light lights up.

If the warning light does not light up, inspect the bulb or wire harness.

24. INSPECT BUCKLE SWITCH CONTINUITY

The seat belt buckle switch cannot be inspected indepently because it is a hall effect switch.

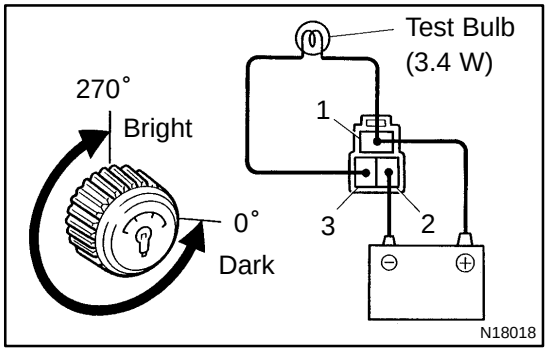

25. INSPECT LIGHT CONTROL RHEOSTAT OPERATION

(a) Connect terminals 1 and 3 through a 3.4 W test bulb.
(b) Connect the positive (+) lead from the battery to terminal 1 and the negative (−) lead to terminal 2.
(c) Turn the rheostat knob fully counterclockwise, and check that the test bulb turns off.
(d) Gradually turn the rheostat knob clockwise, and check that the test bulb brightness changes from dark to bright.

If operation is not as specified, replace the rheostat.

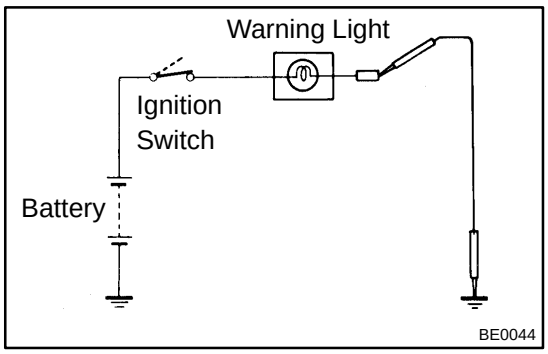

26. INSPECT OPEN DOOR WARNING LIGHT

(a) Disconnect the connector from the door courtesy switch and ground terminal on the wire harness side.

(b) Turn the ignition switch ON, and check that the warning light lights up.

If the warning light does not light up, inspect the bulb.

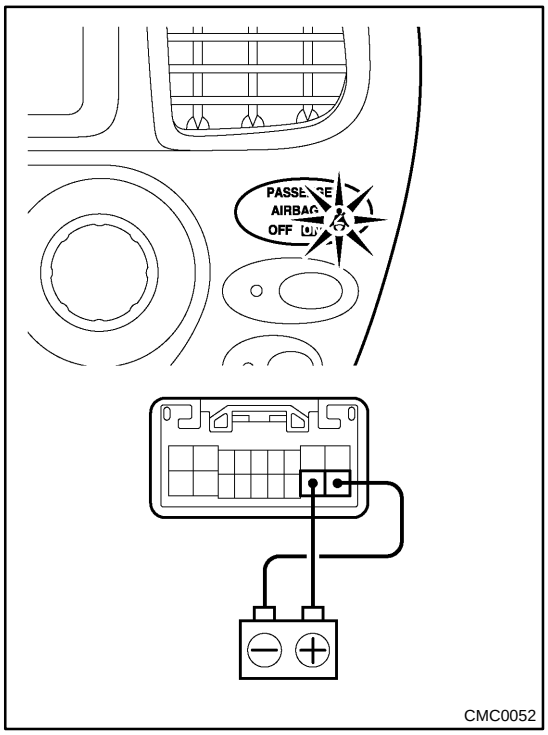

27. INSPECT PASSENGER SEAT BELT WARNING LIGHT

(a) Remove the center cluster finish panel.

(b) Disconnect the connectors from the center integration.

(c) Connect the positive(+) lead the vattery to the terminal 11 and negative (−) lead terminal 10, and check that the warning light lights up.

If the warning light does not light up, inspect the bulb or wire harness.

28. MAINTENANCE LIQUID RESETTING PROCEDURE

(a) Set the display window to ODO.
(b) Turn the ignition switch off.
(c) Pressing the reset switch, turn the ignition switch to the ON position (keep pressing for at least 5 seconds.)
(d) Reset procedure is completed.

HINT:

- If the ignition switch is turned off during the reset procedure.
  LCD: off
  IND: off
- If the reset switch is pressed off during the reset procedure.
  LCD: return to ODO
  IND: Keep the previous state of reset

Indicator Condition:

State	Condition	Specified State
Blinking	The vehicle runs 4,500 miles after the previous setting	The indicator blinks for 12 seconds after the ignition switch is on (after 3 seconds for a bulb check).
Continuously Illuminated	The vehicle runs 5,000 miles after the previous setting	The indicator is continuously illuminated after the ignition switch is on.

− MEMO −

COMBINATION METER

BE2L5−02

LOCATION

Double Cab

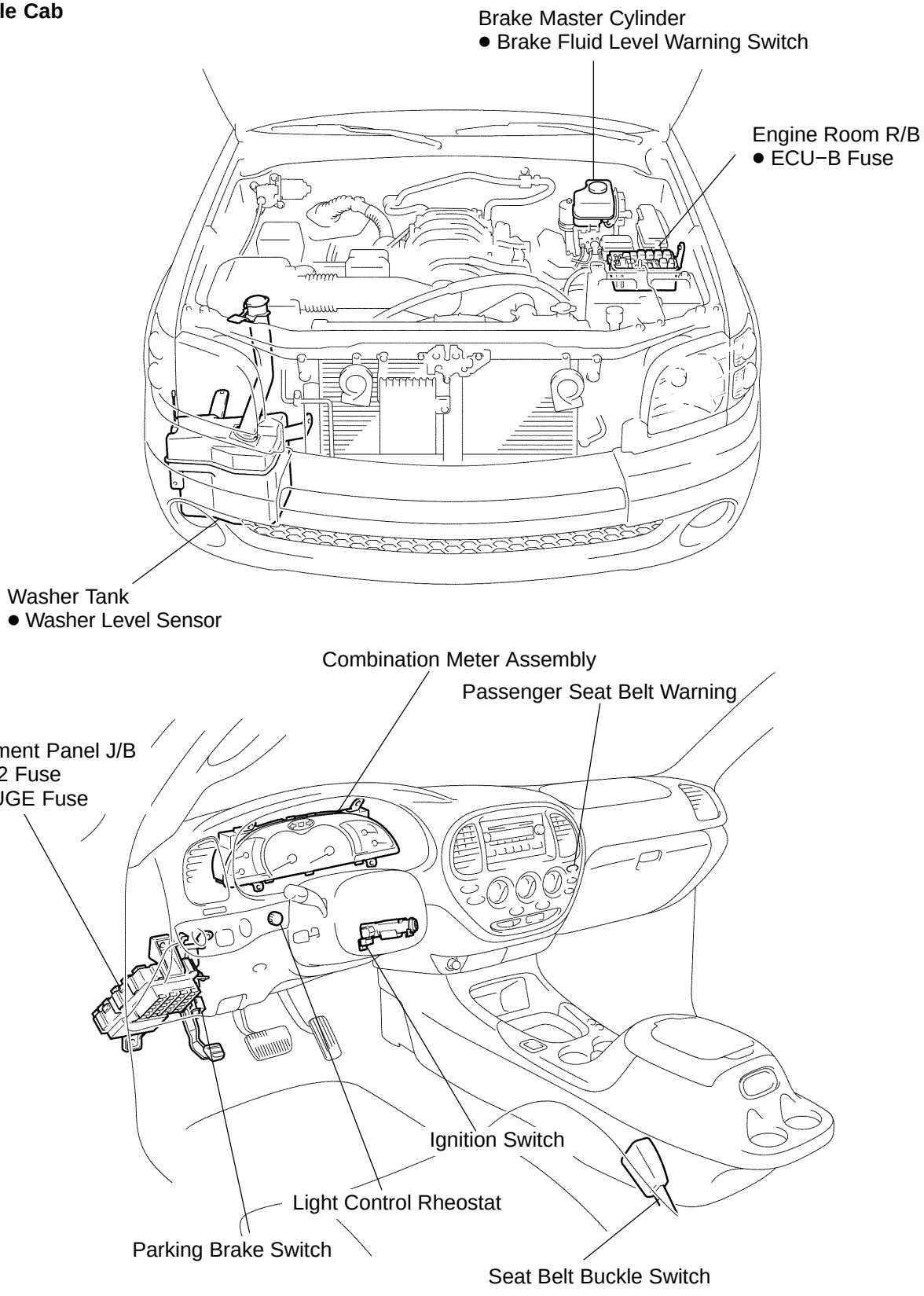

P

I28908

Except Double Cab

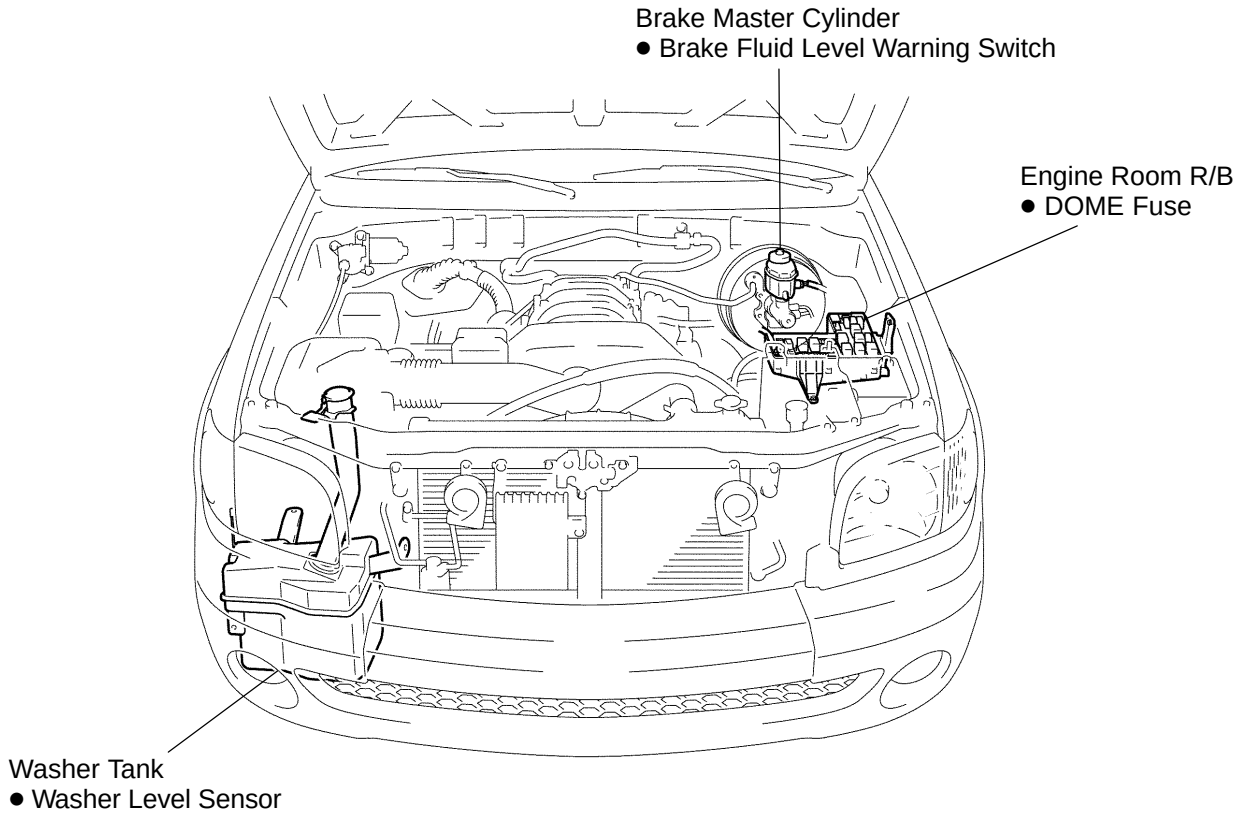

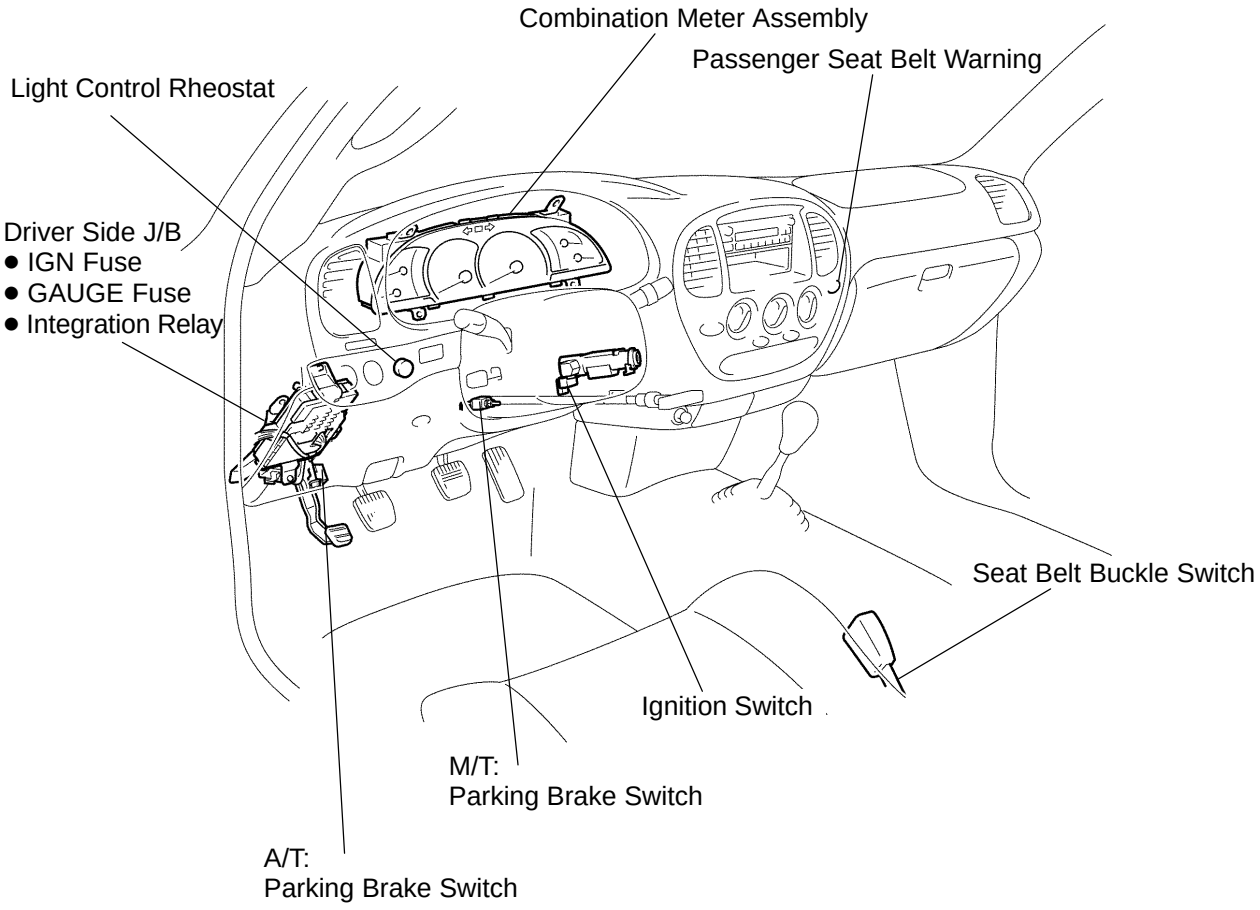

P

I28909

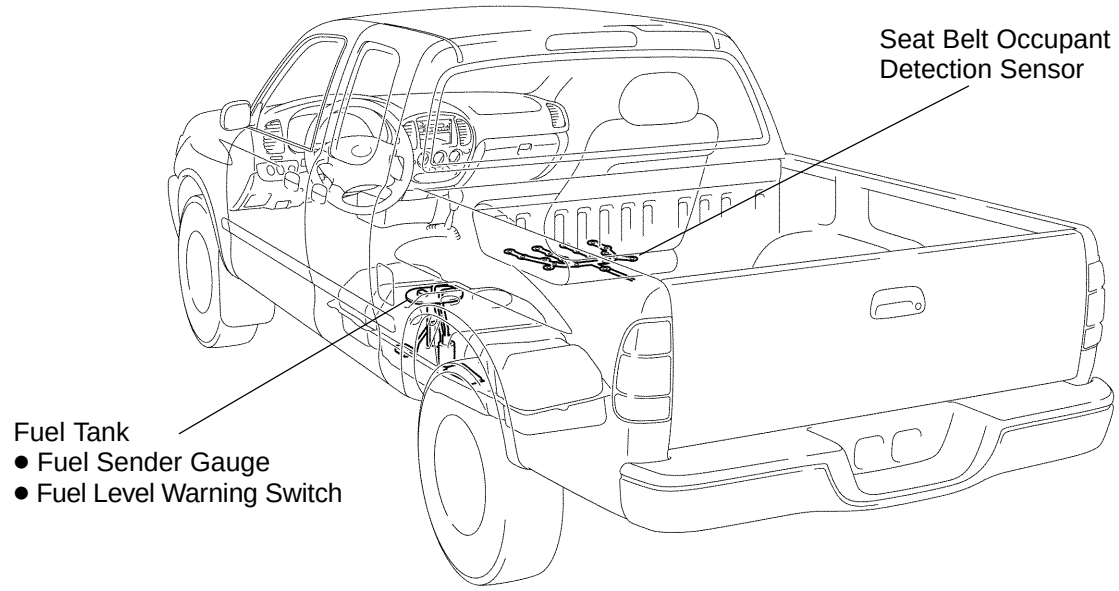
Seat Belt Occupant
Detection Sensor
Fuel Tank
● Fuel Sender Gauge
● Fuel Level Warning Switch
I10538

BE2MF−01

CALIBRATION

1. SELECTING COMPASS DISPLAY MODE

The mode select switch allows you to select the Display or Non−display mode of the compass.

2. SETTING ZONE

Deviation between the ”magnetic north” and ”actual north” differs depending on the terrestrial location. Therefore, adjustment of the magnetism is required. Since the magnetic condition differs depending on the area where the vehicle is used, it is necessary for each user to set the zone. (Refer to Compass Zone Map). The zone setting can be changed using the E/M switch of the display.

3. PERFORMING CALIBRATION

Because each vehicle has its own magnetic field, calibration should be performed for each vehicle. This compass function is used when storing the record of the vehicle’s magnetic field.

4. WHEN COMPASS MAGNETIZED:

A compass could be magnetized during shipping by vessels or freight cars. Therefore, make sure to perform calibration and ensure that calibration is performed properly before delivery. If it cannot be done (cannot complete in spite of driving round several times), it may be caused by magnetization. Demagnetize the vehicle using a demagnetizer and perform calibration again.

5. SETTING COMPASS

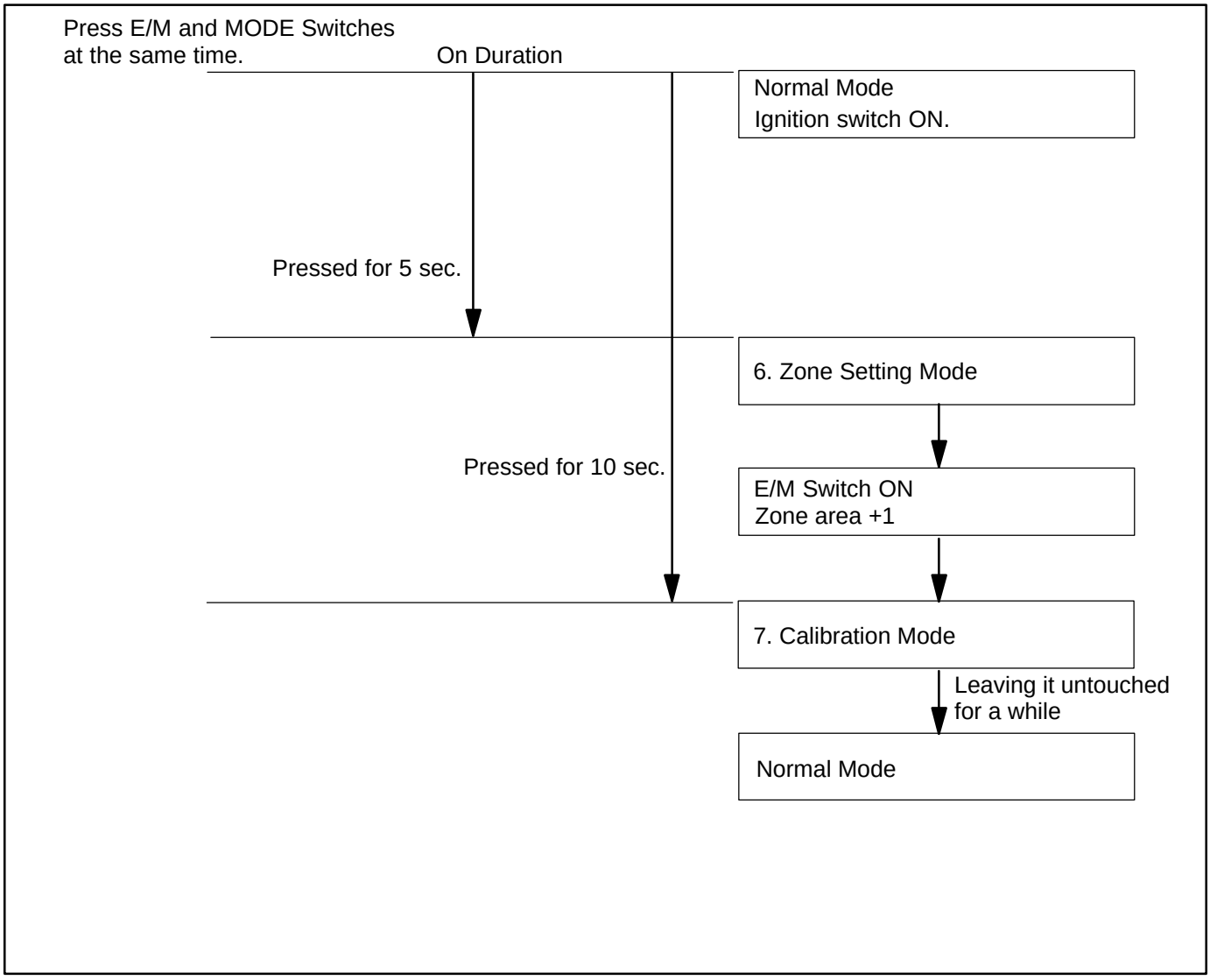

6. ZONE SETTING MODE

(a) Turn the ignition switch ON.

(b) To keep pressing the E/M switch and MODE switch for 5 seconds when outer temperature is displayed will activate the zone setting mode. A number (1 to 15) is displayed on the compass display.

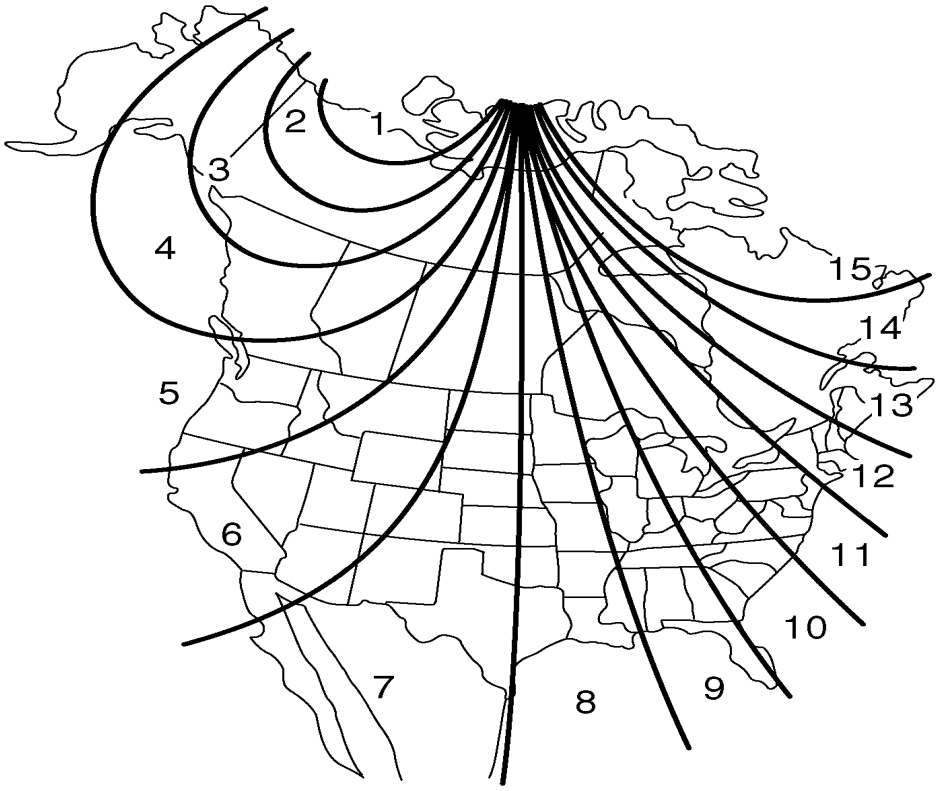

I27615

HINT:
In the initial status, ”8” is displayed.

(c) The displayed number increases +1 every time the E/M switch is pressed. Referring to the map, check the number for the area where the vehicle will be used and set the zone number.

(d) Leave it untouched for several seconds after setting and check that the compass display shows an azimuthal direction (N, NE, E, SE, S, SW, W, or NW) or ”VAR”.

7. CALIBRATION SETTING MODE

(a) After the set zone is displayed, if the E/M switch and MODE switch remains pressed another 5 seconds will activate the calibration setting mode.

(b) To keep pressing the E/M switch and MODE switch for 10 seconds when outer temperature is displayed will also activate this mode.

(c) Drive the vehicle at a slow speed of 8 km/h (5 mph) or less in the circular direction.

(d) Driving round the circle 1 to 3 times will display the azimuthal direction on the display, completing the calibration.

HINT:
After the calibration is completed, it is not necessary to perform the above procedures unless the magnetic field strength is drastically changed. If this happens, the azimuthal display will be changed to ”CAL”.

COMPASS (Double Cab)

BE2L8−01

LOCATION

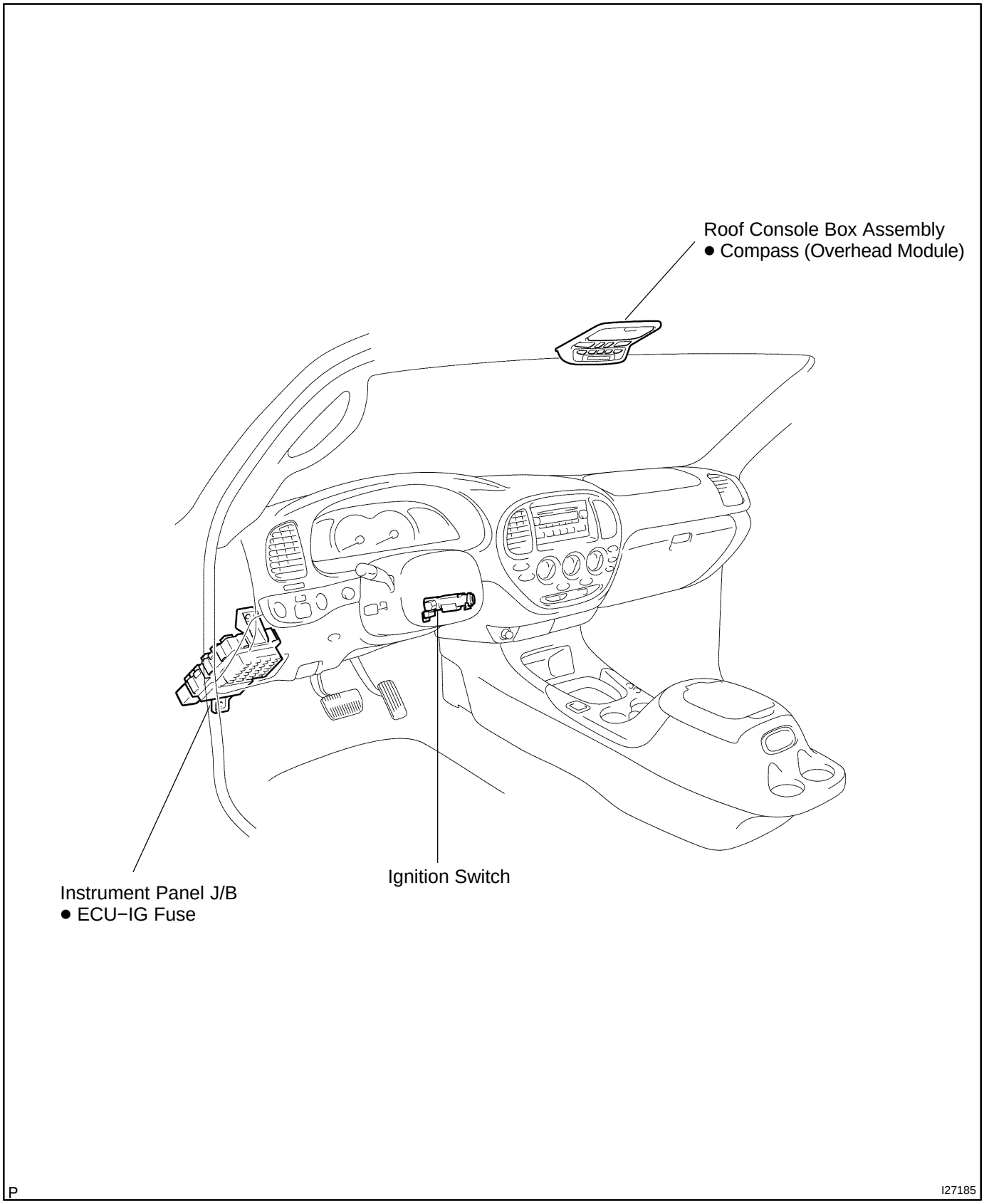

BE2LB−01

INSPECTION

Wire Harness Side

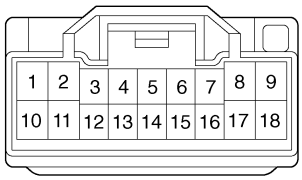

I27503

1. INSPECT DEFOGGER SWITCH (in INTEGRATION CONTROL PANEL SWITCH) CIRCUIT

Disconnect the connector from the panel and inspect the connector on wire harness side, as shown in the chart.

Tester Connection	Condition	Specified Condition
4 − Ground	Ignition switch OFF or ACC	Below 1 V
4 − Ground	Ignition switch ON	10 − 14 V
6 − Ground	Constant	Continuity
10 − Ground	Constant	Continuity
14 − Ground	Ignition switch OFF or ACC	Below 1 V
14 − Ground	Ignition switch ON	10 − 14 V
15 − Ground	Constant	10 − 14 V

If the result is as specified, replace the panel.

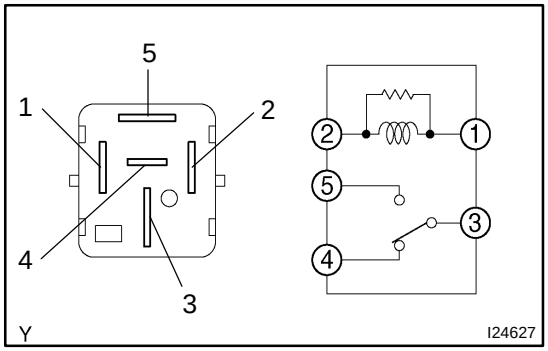

I24627

2. INSPECT DEFOGGER RELAY (Making: DEFOG) CONTINUITY

Tester Connection	Specified Condition
3 − 4	Continuity
3 − 4	No continuity (When battery voltage is applied to terminals 1 and 2)
3 − 5	No continuity
3 − 5	Continuity (When battery voltage is applied to terminals 1 and 2)

If the continuity is not as specified, replace the relay.

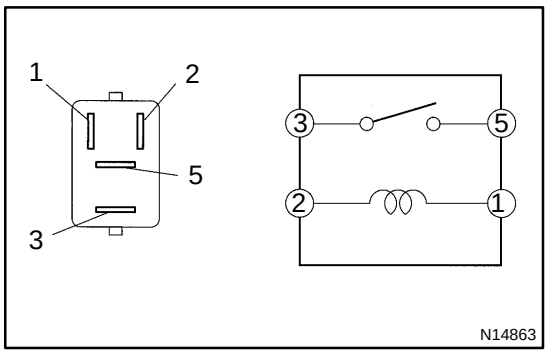

3. INSPECT MIRROR HEATER RELAY (Marking: MIR HTR) CONTINUITY

Condition	Specified Condition
3 − 5	No continuity
3 − 5	Continuity (When battery voltage is applied to terminals 1 and 2)

If the continuity is not as specified, replace the relay.

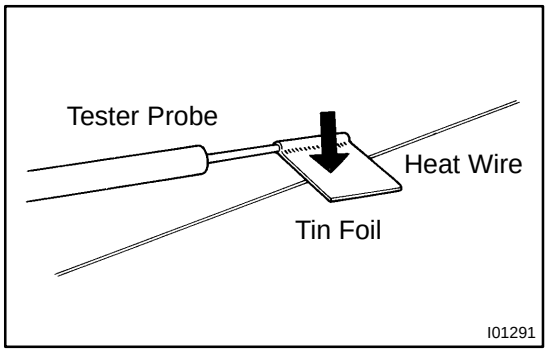

4. INSPECT DEFOGGER WIRE

NOTICE:

- **When cleaning the glass, use a soft and dry cloth and wipe the glass in the direction of the wire. Take care not to damage the wires.**
- **Do not use detergents or glass cleaners with abrasive ingredients.**
- **When measuring voltage, wrap a piece of tin foil around the tip of the negative probe and press the foil against the wire with your finger, as shown in the illustration.**

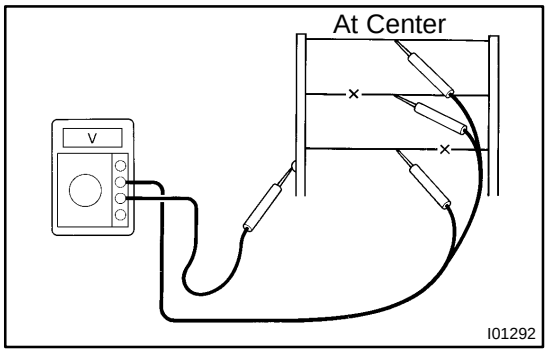

(a) Turn the ignition switch ON.
(b) Turn the defogger switch on.
(c) Inspect the voltage at the center of each heat wire, as shown in the illustration.

Voltage	Criteria
Approx. 5 V	Okay (No break in wire)
Approx. 10 V or 0 V	Broken wire

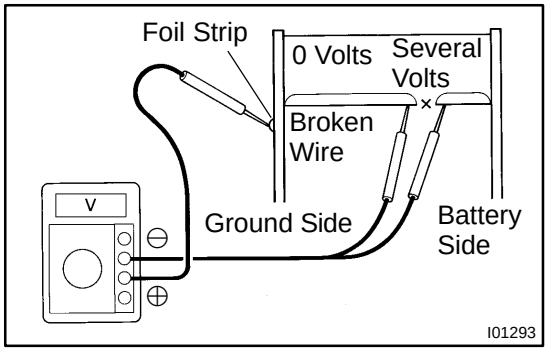

HINT:
If there is approximately 10 V, the wire is broken between the center of the wire and the positive (+) end. If there is no voltage, the wire is broken between the center of the wire and ground.

(d) Place the voltmeter positive (+) lead against the defogger wire on the battery side.
(e) Place the voltmeter negative (−) lead with the foil strip against the wire on the ground side.
(f) Slide the positive (+) lead from the battery to the ground side.
(g) The point where the voltmeter deflects from several V to zero V is the place where the defogger wire is broken.

HINT:
If the heat wire is not broken, the voltmeter indicates 0 V at the positive (+) end of the heat wire but gradually increases to about 12 V as the meter probe moves to the other end.

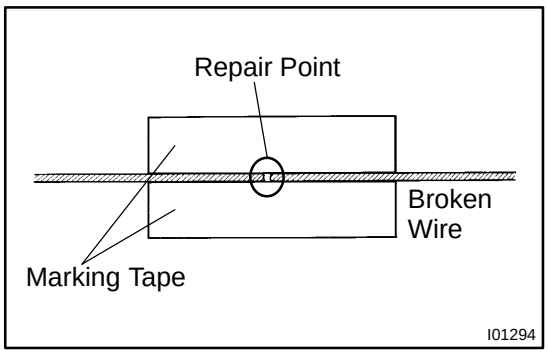

5. IF NECESSARY, REPAIR DEFOGGER WIRE

(a) Clean the broken wire tips with grease, wax and silicon remover.

(b) Place the masking tape along both sides of the wire for repair.

(c) Thoroughly mix the repair agent (Dupont paste No. 4817).

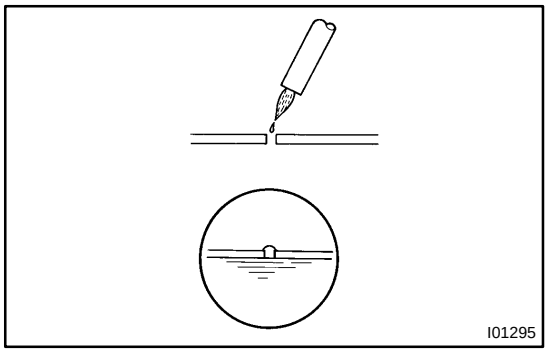

(d) Using a fine tip brush, apply a small amount of the agent to the wire.

(e) After a few minutes, remove the masking tape.

(f) Do not repair the defogger wire for at least 24 hours.

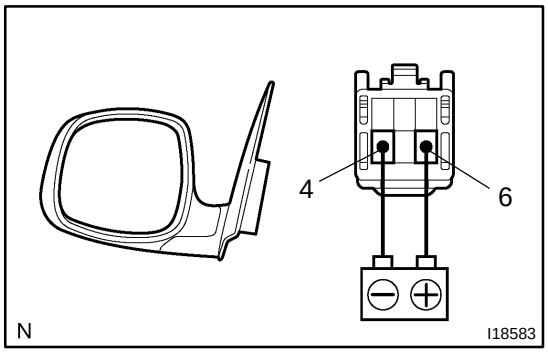

6. INSPECT MIRROR HEATER OPERATION

(a) Connect the positive (+) lead from the battery to terminal 6 and the negative (−) lead to terminal 4.

(b) Check that the mirror becomes warm.

HINT:

It will take a short time for the mirror to become warm.

If operation is not as specified, replace the mirror.

DEFOGGER SYSTEM (Double Cab)

BE2LA−01

LOCATION

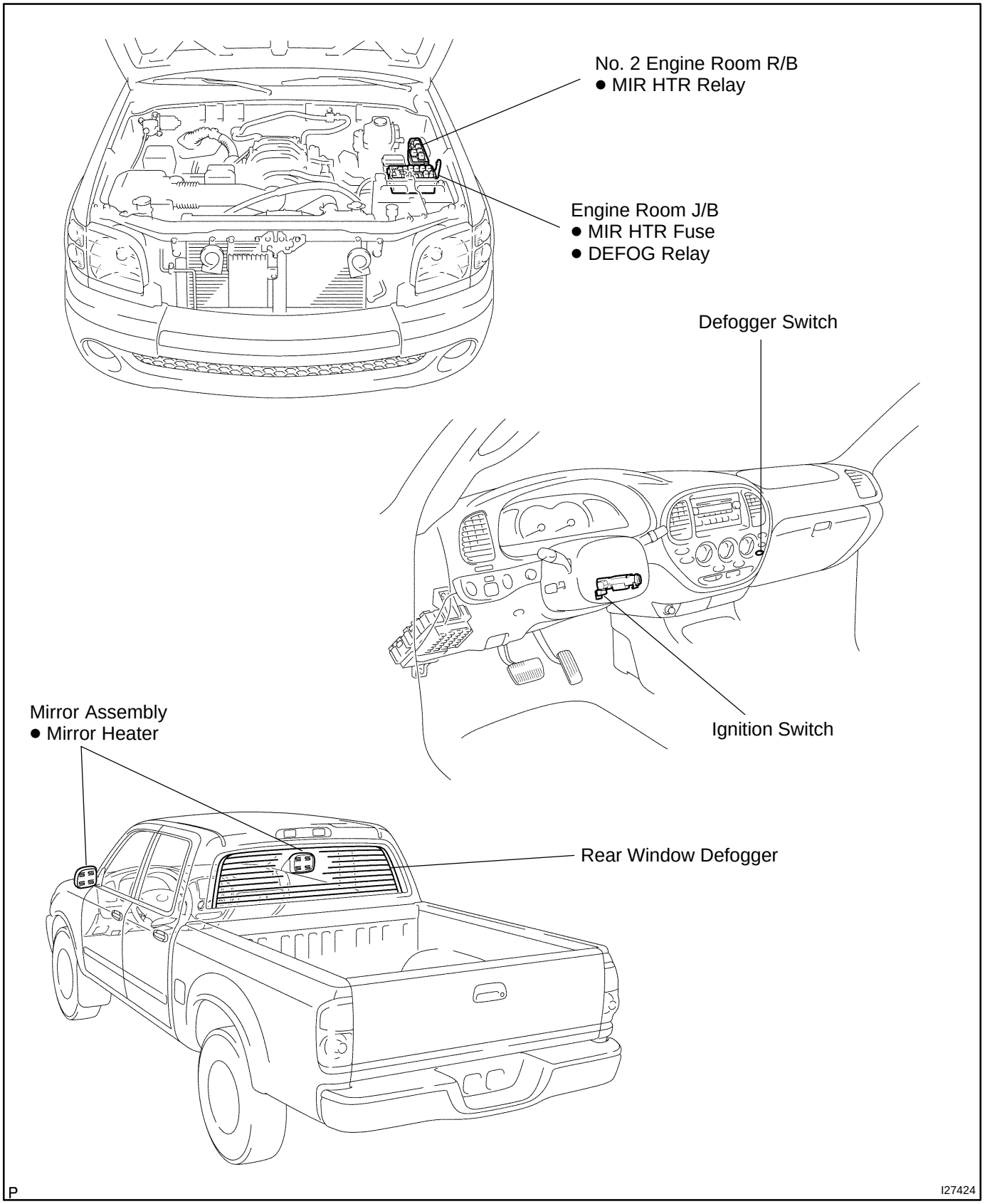

BE2MH−01

INSPECTION

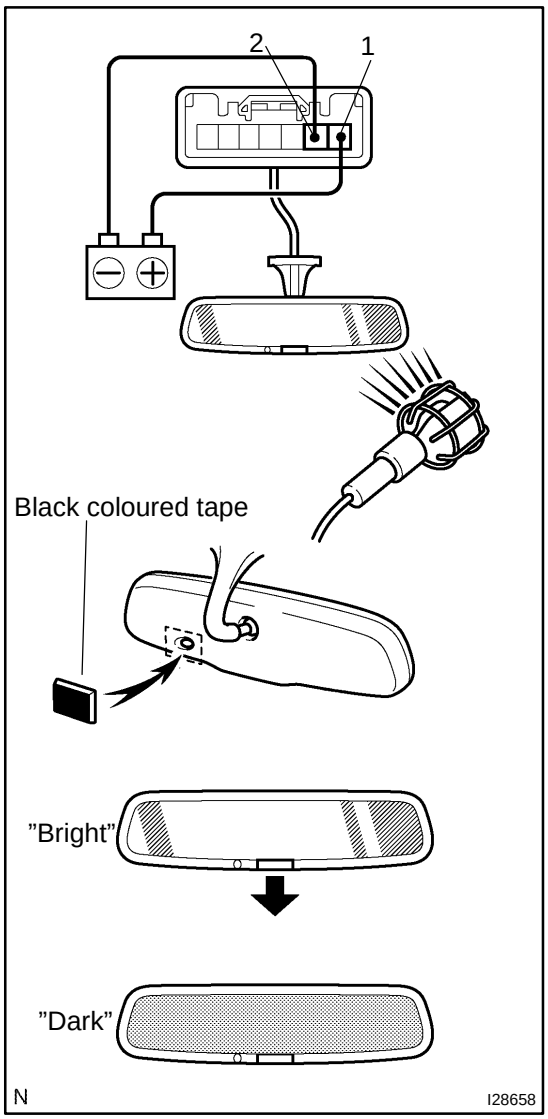

1. INSPECT ELECTRO CHROMIC INNER MIRROR OPERATION

(a) Connect the positive (+) lead from the battery to terminal 1 and the negative (−) lead to terminal 2.
(b) Attach a black coloured tape to forward sensor to prevent it from sensing.
(c) When the mode is turned to AUTO, check that indicator light lights up.
(d) Snhine an electric light on the mirror. Check that the mirror surface changes from bright to dark.

If operation is not as specified, replace the inner mirror.

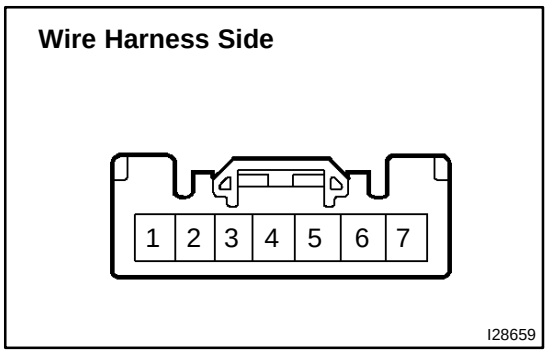

2. INSPECT ELECTRO CHROMIC INNER MIRROR CIRCUIT

Disconnect the connector from the mirror and inspect the connector on the wire harness side, as shown.

Tester connection	Condition	Specified condition
1 − Ground	Ignition switch LOCK or ACC	No voltage
1 − Ground	Ignition switch ON	Battery positive voltage
2 − Ground	Constant	Continuity

If circuit is not as specified, inspect the circuits connected to other parts.

ELECTRO CHROMIC MIRROR SYSTEM

BE2MG−01

LOCATION

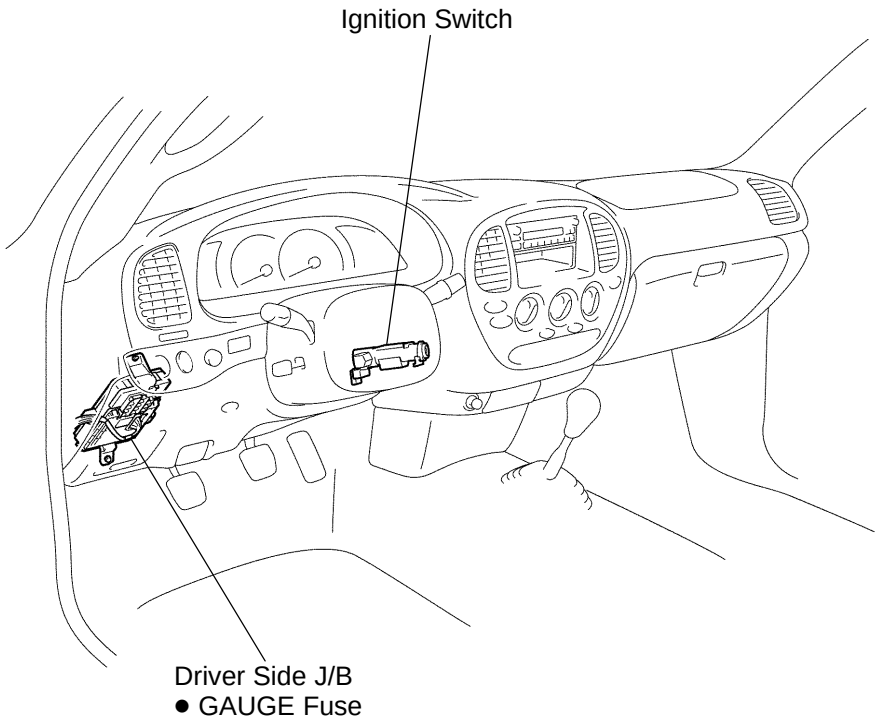

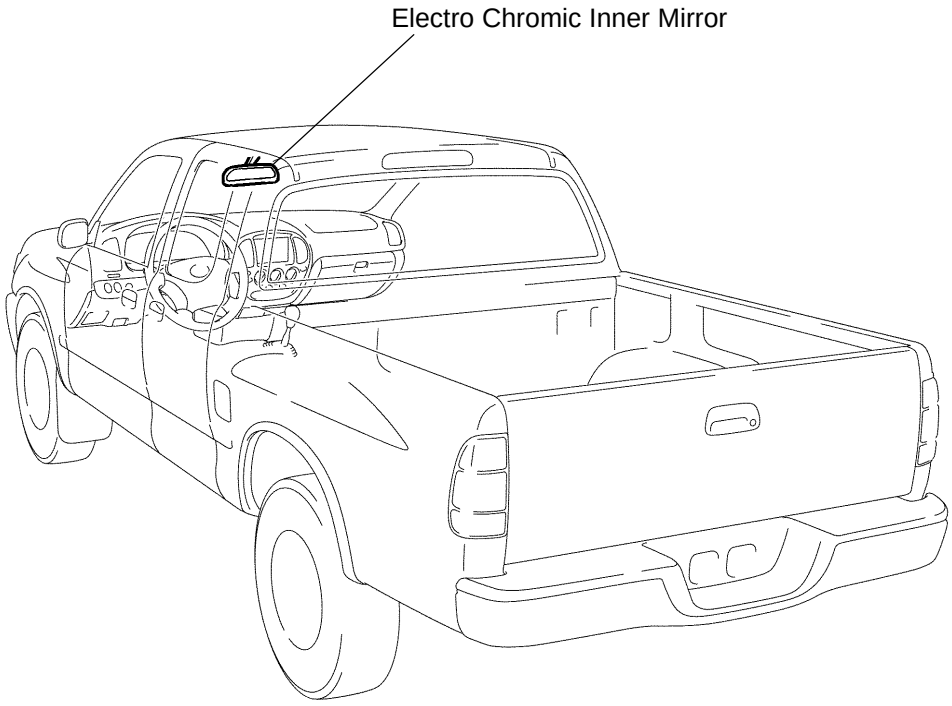

P

I28660

BE2CF−02

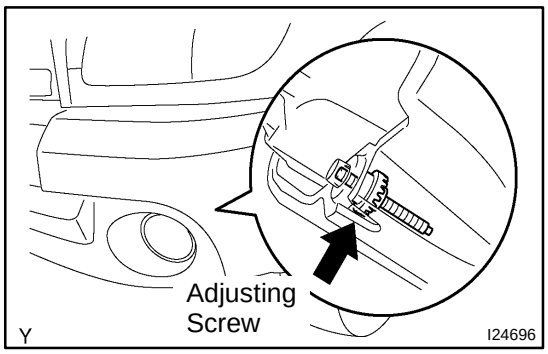

ADJUSTMENT

ADJUST FOG LIGHT AIM

Adjusting screw: Vertical direction

BE2K5−01

INSPECTION

1. INSPECT FOG LIGHT SWITCH CONTINUITY

Switch Position	Tester Connection	Specified Condition
OFF	10 − 11	No continuity
ON	10 − 11	Continuity

If the continuity is not as specified, replace the switch.

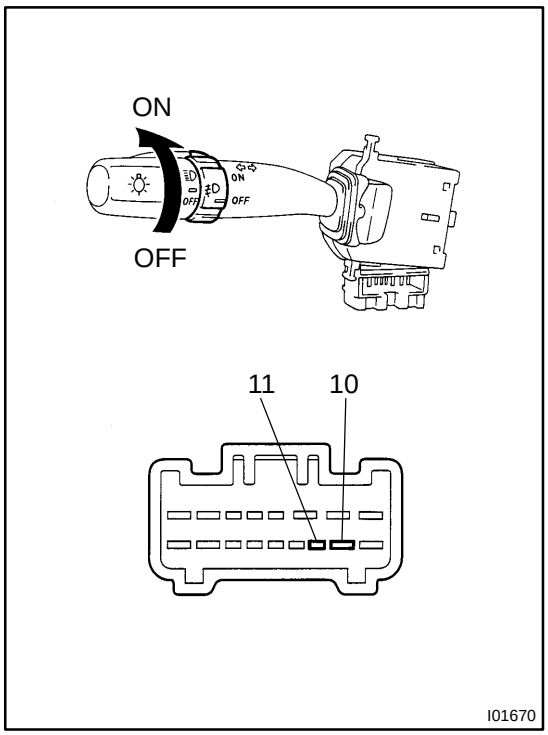

2. Double cab: INSPECT FOG LIGHT RELAY CONTINUITY

Tester Connection	Specified Condition
3 − 5	No continuity
3 − 5	Continuity (When battery voltage is applied to terminals 1 and 2)

If the continuity is not as specified, replace the switch.

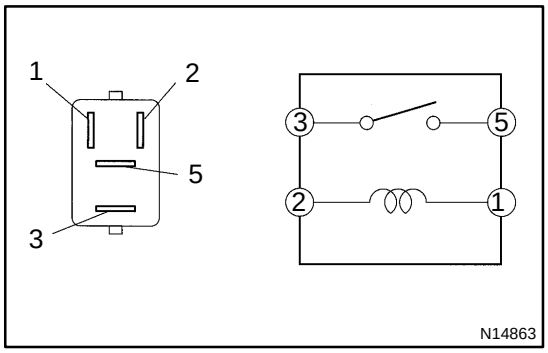

3. Except double cab: INSPECT FOG LIGHT RELAY (Marking: FOG) CONTINUITY

Tester Connection	Specified Condition
3 − 5	No continuity
3 − 5	Continuity (When battery voltage is applied to terminals 1 and 2)

If the continuity is not as specified, replace the relay.

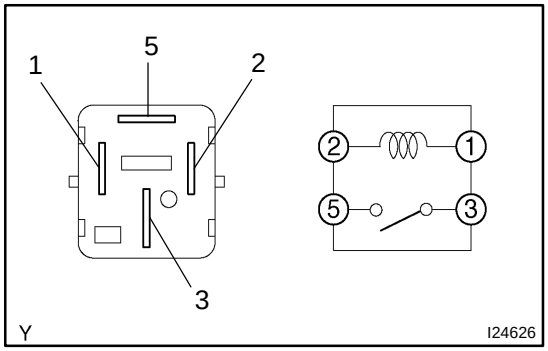

FOG LIGHT SYSTEM

LOCATION

BE0H2−18

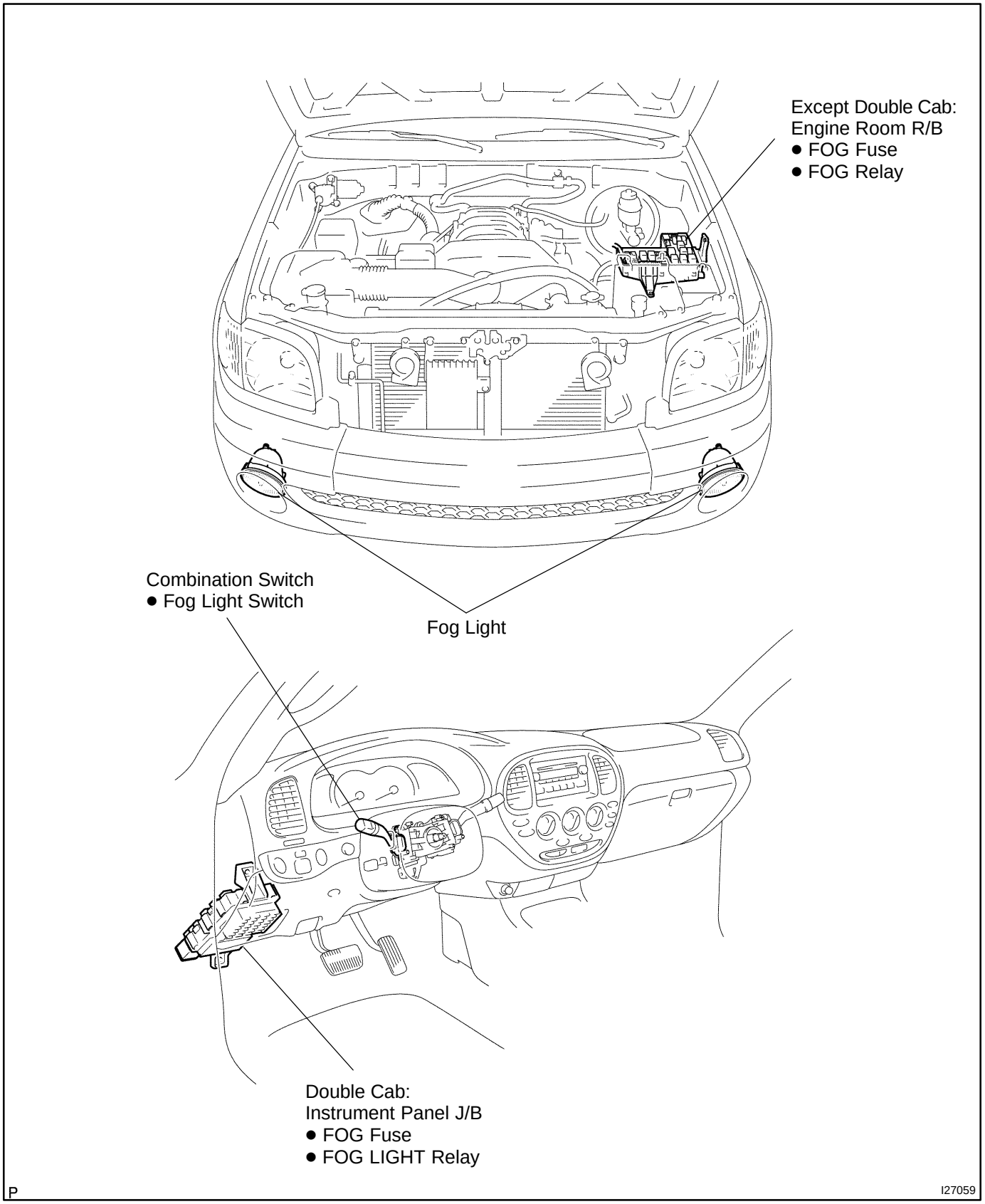

BE2KI−01

INSPECTION

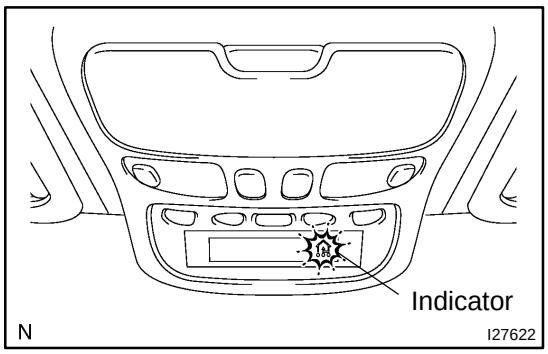

1. INSPECT GARAGE DOOR OPENER

Press the switch and check that indicator turns on.

Even if only one switch cannot turn on an indicator, replace the door opener.

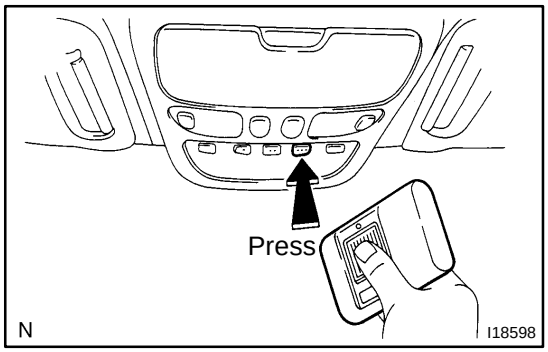

2. INSPECT GARAGE DOOR OPENER REGISTRATION AND TRANSMITTING

HINT:

Use the KENTMORE home link tester and a tester transmitter for this test. First erase the customer's transmitter code, and then register the tester transmitter code.

(a) Check if the tester transmitter code was successfully registered.

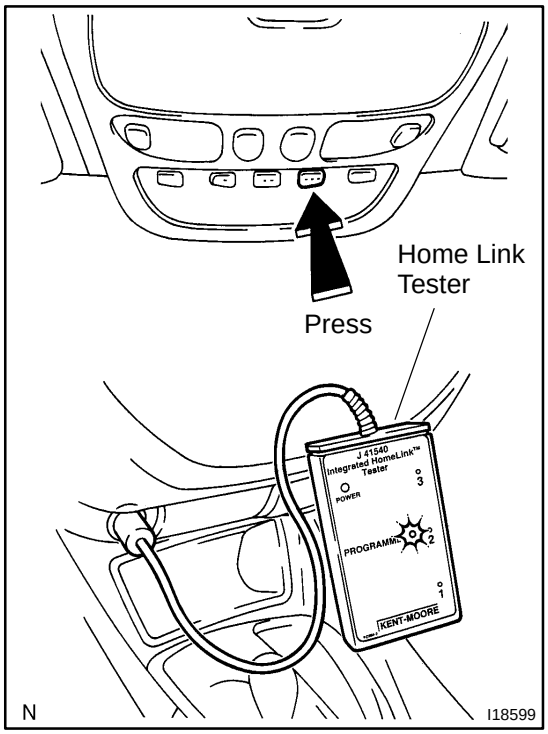

(b) Press the garage door opener switch that was registered to the tester transmitter. Check if the home link tester's green LED illuminates.

HINT:

If the green LED does not illuminate, replace the garage door opener.

(c) When the inspection is complete, re−register the customer's transmitter code(s) again.

BE2KH−01

LOCATION

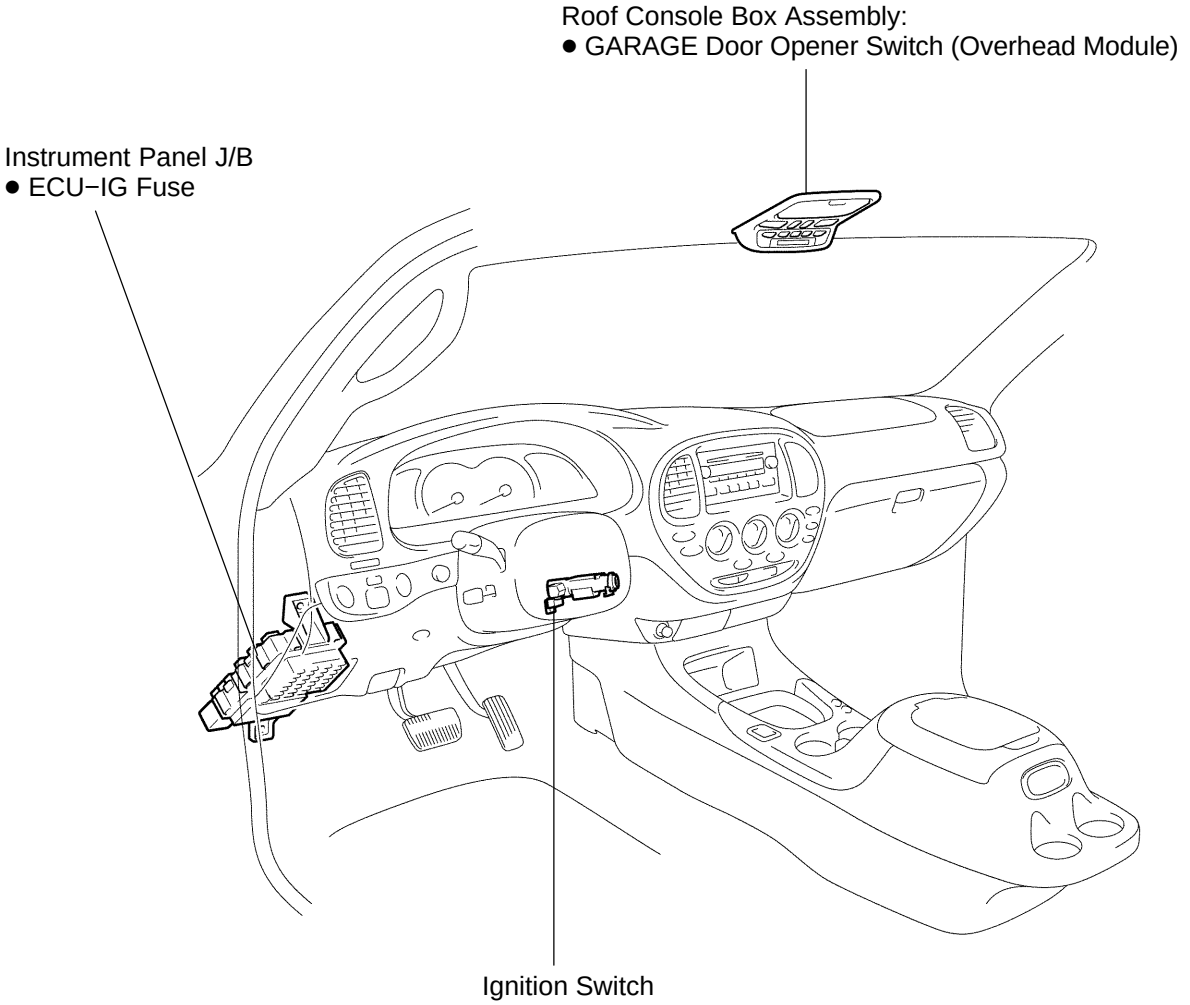

P

I27185

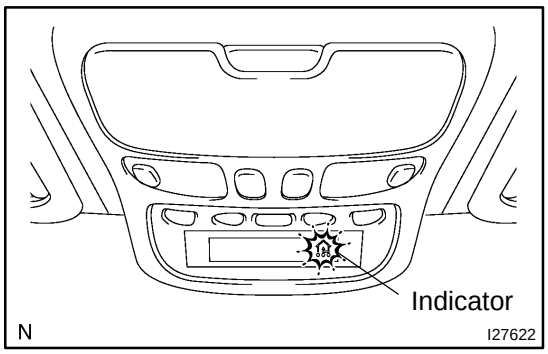

GARAGE DOOR OPENER SYSTEM (Double Cab)

BE2KG−01

REGISTRATION PROCEDURE

REGISTER TRANSMITTER CODE

HINT:

The vehicle's garage door opener records transmitter codes for systems such as garage doors, gates, entry gates, door locks, home lighting systems, security systems or other transmitter code based systems. The garage door opener is built into the roof console box assembly. After the console box assembly is replaced, transmitter codes for any systems previously registered in the garage door opener must be re−registered.

(a) Re−register systems in the garage door opener registration mode.

NOTICE:

- **Do not perform transmitter code registration for a system if people or objects are near the system to be registered. When registering transmitter codes, injury or damage can occur as the system may open, close, unlock or otherwise operate.**
- **Before transmitter code registration, stop the engine and remove the key from the ignition switch.**
- **The garage door opener cannot be used with: 1) systems that: 1) were manufactured before April 1, 1982; or 2) systems that do not meet Federal Safety Standards (for example, garage doors without a jam protection function).**

HINT:

- 3 transmitter codes can be registered with the garage door opener, one transmitter code for each of the 3 garage door opener switches.
- Disconnecting the battery will not erase the transmitter codes registered with the garage door opener.
- An attempt to overwrite a previously registered transmitter code with a new system's transmitter code may fail. In these situations, the previously registered transmitter code will not be erased.

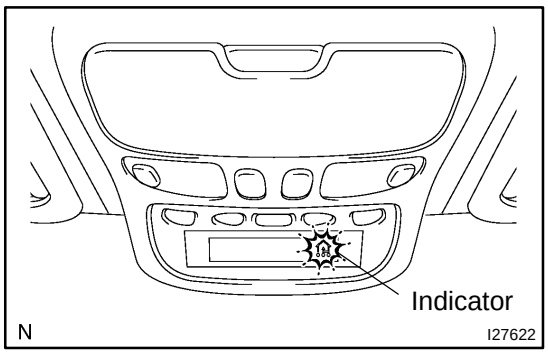

(1) Select a switch of the garage door opener for the transmitter code registration.
(2) Press and hold the selected switch for 20 seconds. Then, the garage door opener enters registration mode.

HINT:
Before entering registration mode, the indicator shows the display. After entering registration mode, the indicator flashes at a cycle of 1 Hz. For a ”rolling code” type system, after entering registration mode, the indicator flashes at a cycle of 8.8 Hz for 1.6 seconds, and then the indicator flashes at a cycle of 1 Hz.

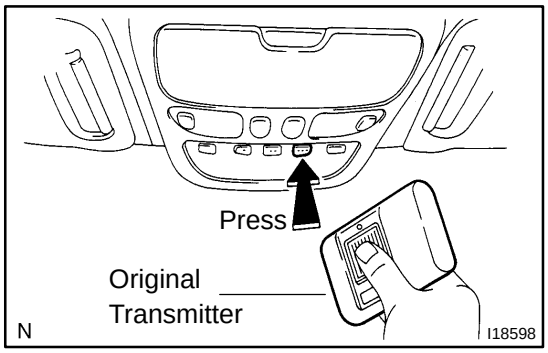

(3) After the garage door opener has entered registration mode, bring the original transmitter of the system to be registered within 1 to 3 inches of the garage door opener and press and hold one of the garage door opener switches. Then press the original transmitter switch.
(4) If the transmitter code registration was successful, the indicator of the garage door opener flashes at a cycle of 5.6 Hz. If no malfunction occurs, release both the garage door opener switch and the original transmitter switch.

HINT:
- If transmitter code registration fails: 1) the original transmitter’s battery may be low or need to be replaced, or 2) the system to be registered may not be compatible with the garage door opener.
- Some transmitter’s signals stop after 1 to 2 seconds. For these types of transmitters: 1) press and hold one of the garage door opener switches, and 2) press and release (cycle) the transmitter switch every 2 seconds. Check if the transmitter code was successfully registered.
- After entering the garage door opener registration mode, transmitter code registration must be completed within 90 seconds. If 90 seconds elapses, the garage door opener will enter low power mode (See step (c)).

Timing chart of registration mode:

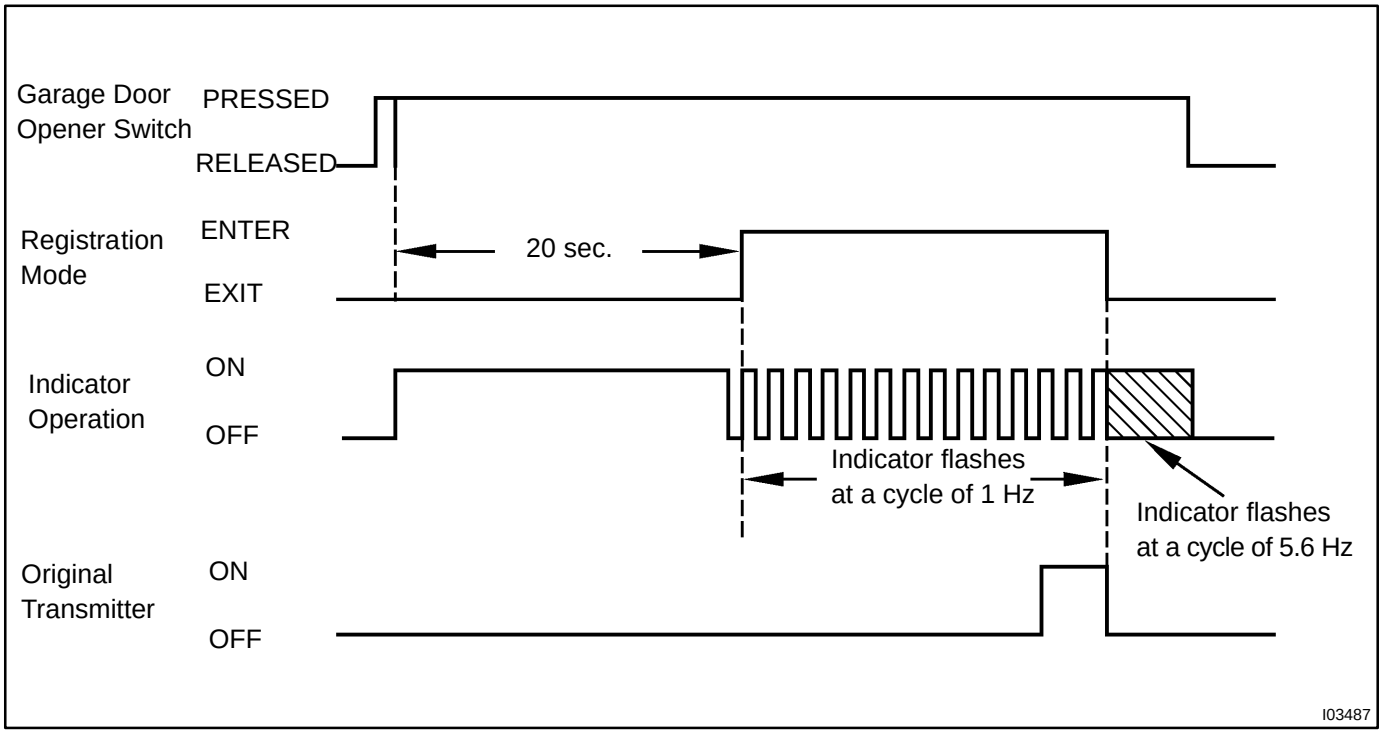

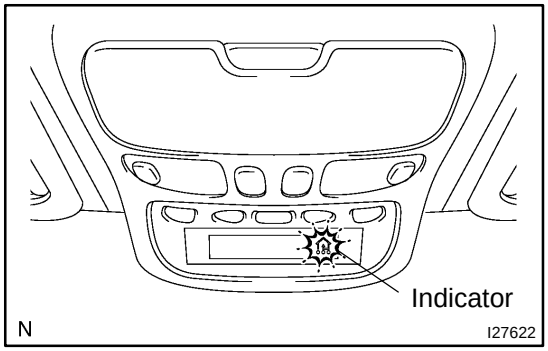

(b) Erase transmitter codes in the garage door opener clear mode.

HINT:

- All 3 registered transmitter codes must be erased at the same time.
- If the switches are released within 10 seconds after the transmitter codes have been erased, the garage door opener will enter registration mode.
- If the switches are held for 10 seconds or more after the transmitter codes have been erased, default codes will be set to the 3 switches of the garage door opener. Using these default codes, you can check operation of the garage door opener can be checked using a tester.
  Press and hold the left and right switch of the garage door opener for 20 seconds. The indicator will begin to flash at a cycle of 5.6 Hz. Releasing the switches will end clear mode.

Timing chart of clear mode:

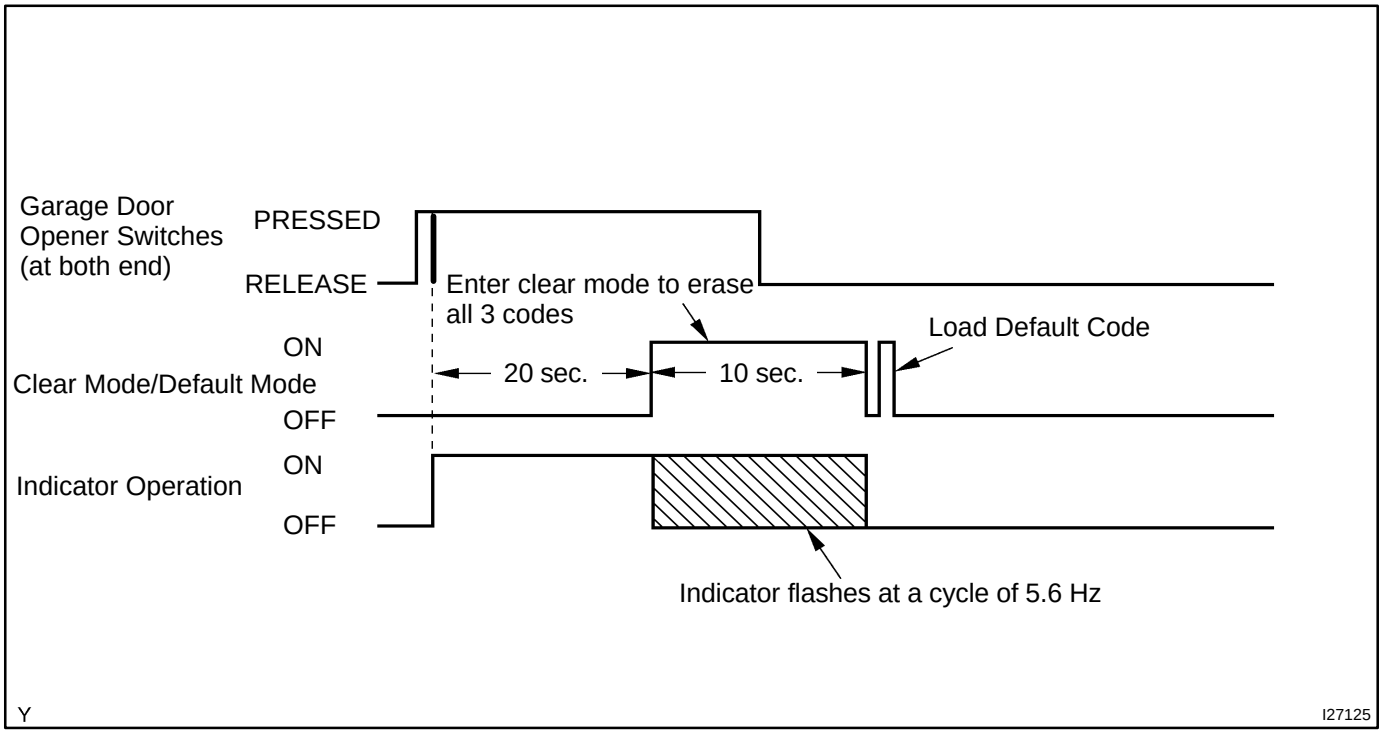

(c) Low power mode:
If a garage door opener switch is held for 55 seconds or more, the garage door opener will enter low power mode to economize on power consumption. When the garage door opener has entered low power mode, the indicator turns off.

BE173−05

ADJUSTMENT

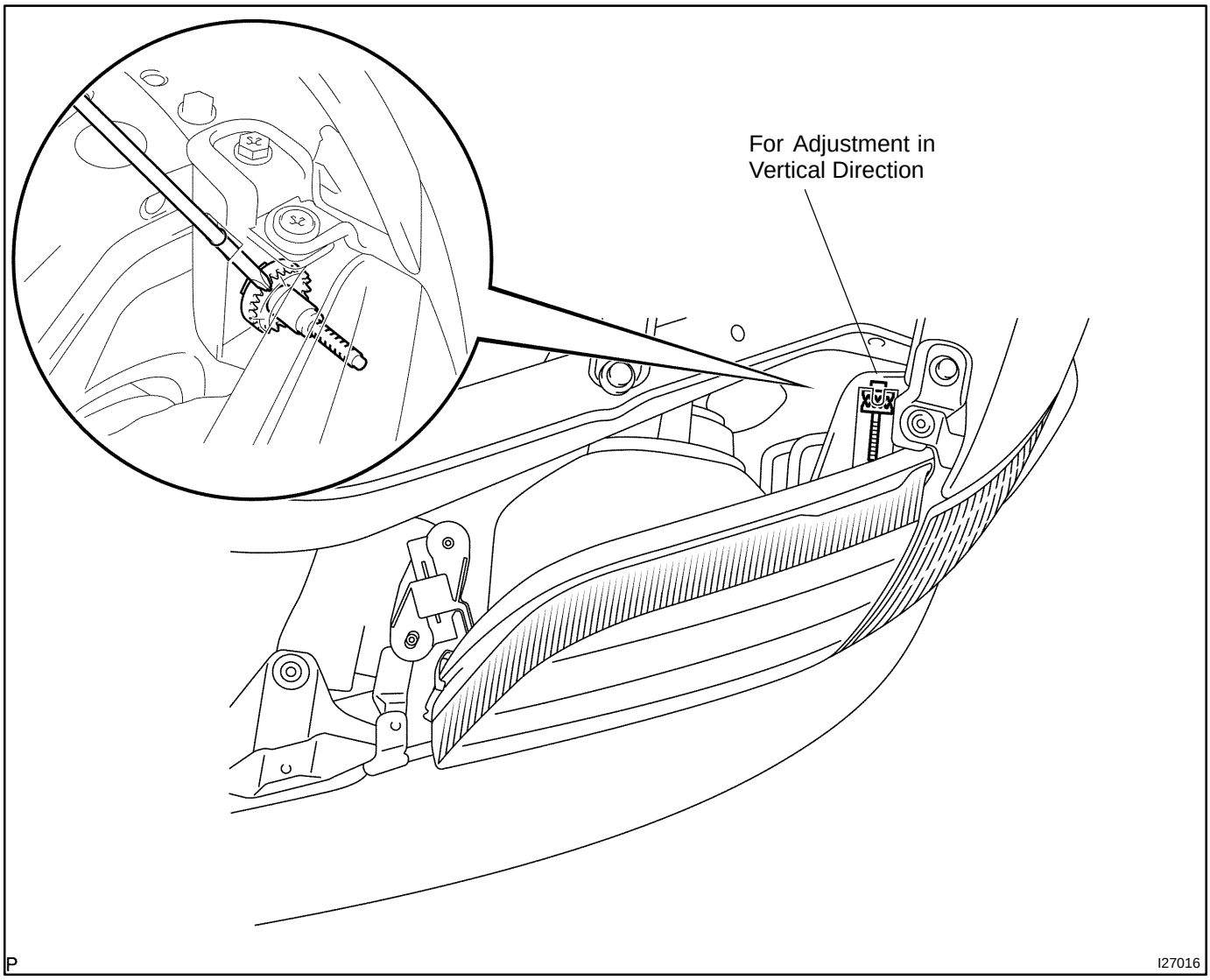

ADJUST HEADLIGHT AIM ONLY

(a) Place the vehicle in the following conditions.
- The area where the headlight aiming is not deformed.
- The vehicle is parked in a flat area.
- The tire inflation pressure is at the specified value.
- A driver is in the driver side seat, the vehicle is ready for driving and with the tank is full.
- The vehicle has been bounced several times.

(b) Check the headlight aiming.
(1) Prepare thick white paper.
(2) Put the paper perpendicularly on a ground at the position 3 m (9.84 ft) away from the headlights.
(3) Make sure that the center line of the vehicle and the paper face forms a 90−degree angle as shown in the illustration.
(4) Draw a horizontal line (H line) across the paper so that it is at the same height as the center mark of the low beam lamp on the vehicle.
(5) Draw a vertical line (V line) to where the center line of the vehicle is to be.
(6) Draw 2 vertical lines to where the headlights should strike (V RH and V LH lines).
(7) Draw a horizontal line by connecting both low beam center marks to where the headlights should strike (H RH and H LH lines).

HINT:
The H RH and H LH lines are 0.4° below the horizontal line (H line) of the light axis.

(8) Start the engine.
(9) Turn the headlights ON.
(10) Check if the headlights properly strike the position as shown in the illustration.
(11) If not, adjust the headlights aim vertically.

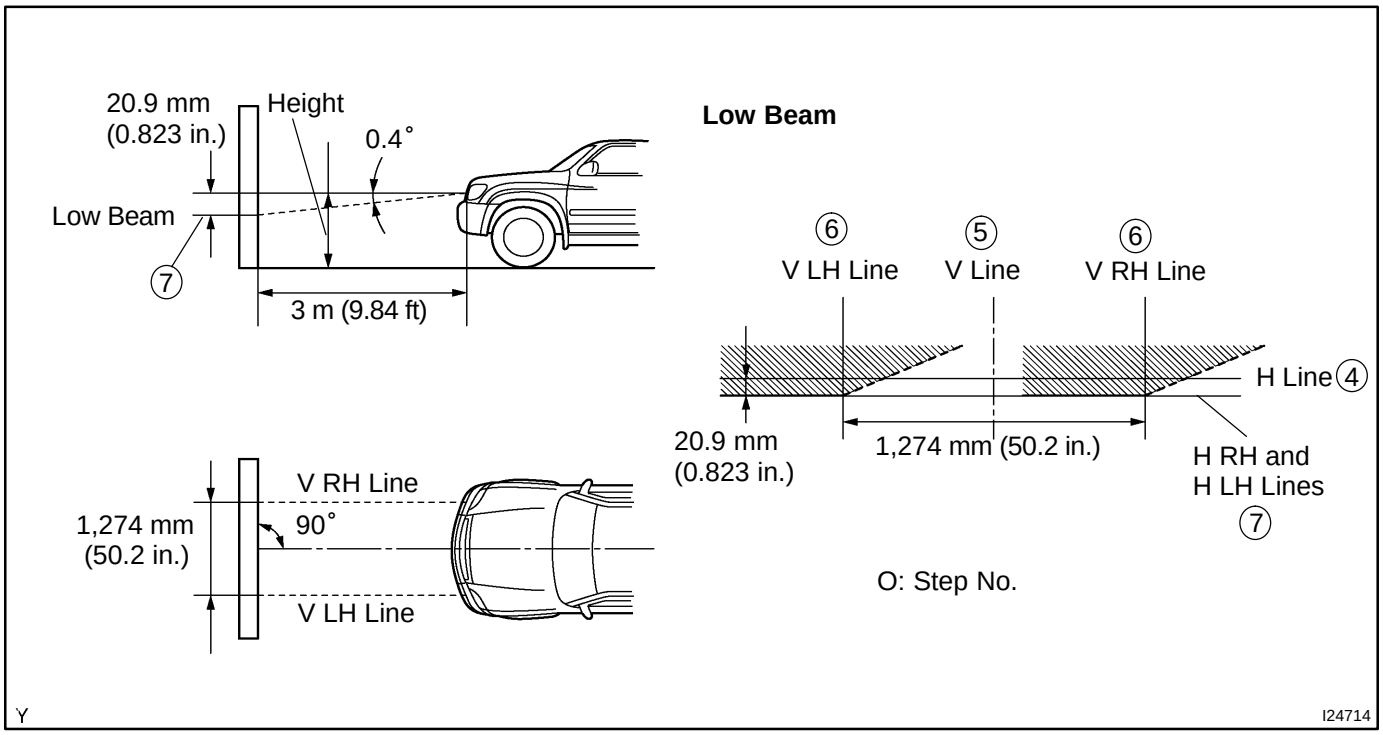

HINT:
As shown in the illustration, adjust the aim of the RH and LH headlights.

(c) When adjusting the headlight aim vertically:
Using a adjusting bolt, adjust the headlight aim within the specified range.

BE171−02

COMPONENTS

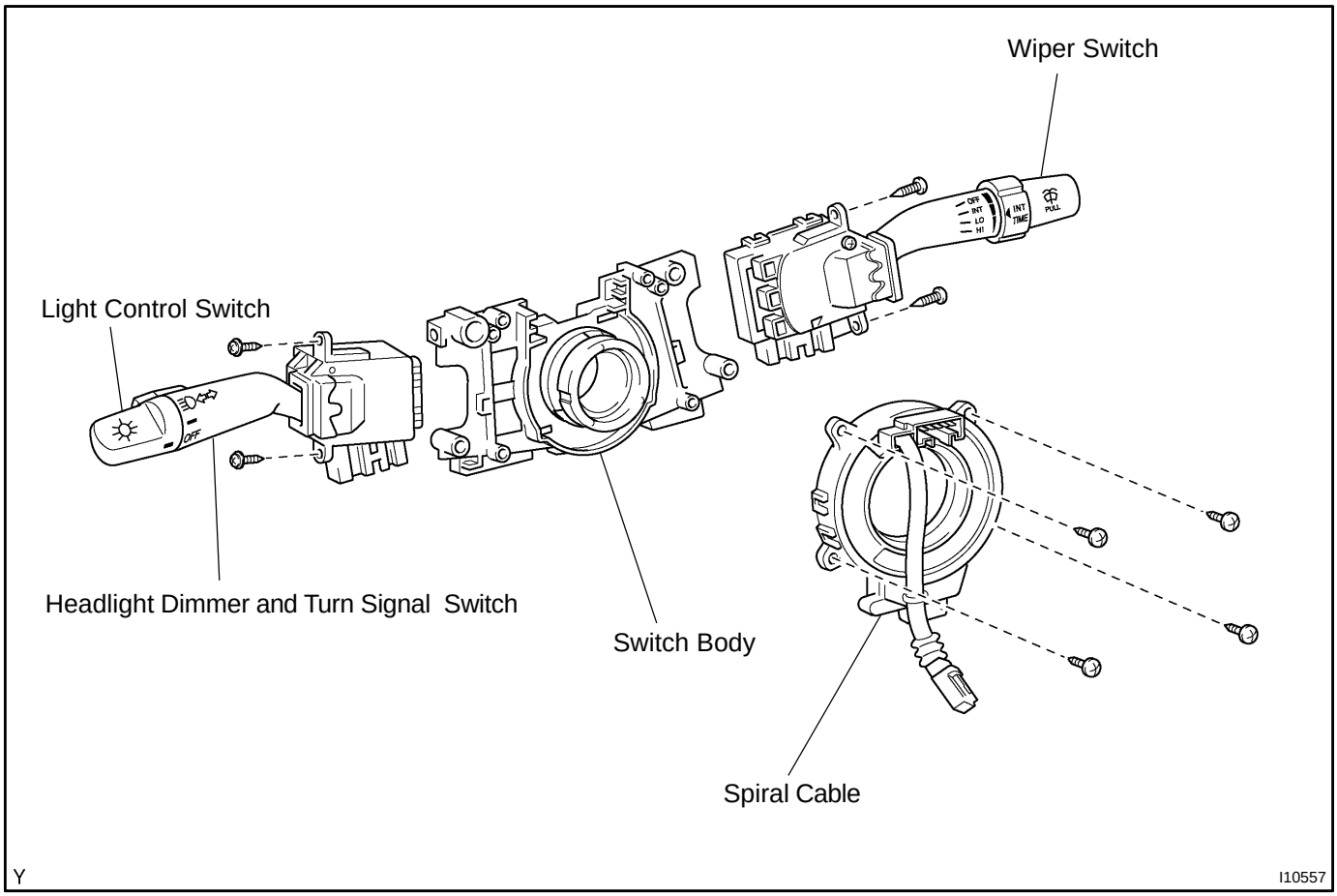

BE2K4−02

INSPECTION

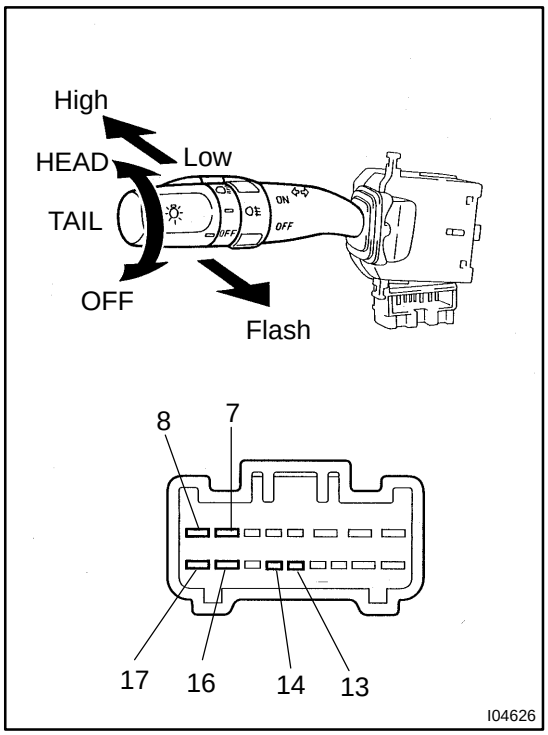

1. INSPECT LIGHT CONTROL SWITCH CONTINUITY

Switch Position	Tester Connection	Specified Condition
OFF	−	No continuity
TAIL	14 − 16	Continuity
HEAD	13 − 14 − 16	Continuity

If the continuity is not as specified, replace the switch.

2. INSPECT HEADLIGHT DIMMER SWITCH CONTINUITY

Switch Position	Tester Connection	Specified Condition
Flash	7 − 8 − 16	Continuity
Low beam	16 − 17	Continuity
High beam	7 − 16	Continuity

If the continuity is not as specified, replace the switch.

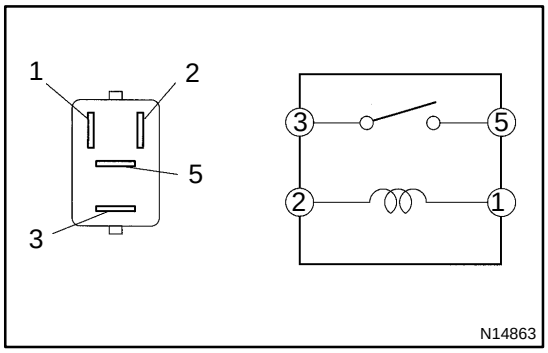

3. INSPECT HEADLIGHT RELAY (Marking: HEAD (Double Cab) or H−LP (Except Double Cab)) CONTINUITY

Tester Connection	Specified Condition
3 − 5	No continuity
3 − 5	Continuity (When battery voltage is applied to terminals 1 and 2)

If the continuity is not as specified, replace the relay.

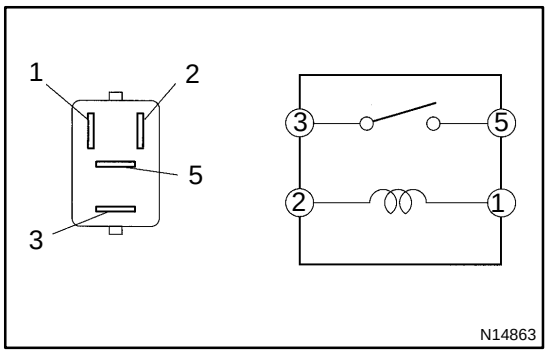

4. Double cab: INSPECT TAILLIGHT RELAY CONTINUITY

Tester Connection	Specified Condition
3 − 5	No continuity
3 − 5	Continuity (When battery voltage is applied to terminals 1 and 2)

If the continuity is not as specified, replace the relay.

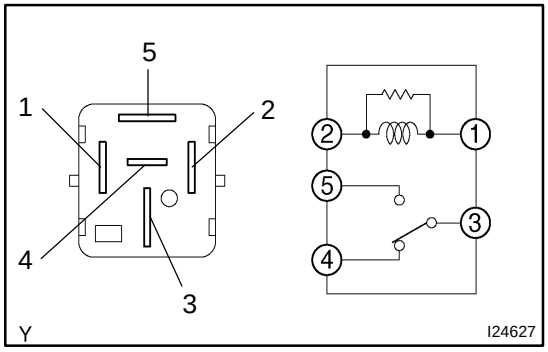

5. w/ Daytime running light: INSPECT DIMMER RELAY CONTINUITY

Tester Connection	Specified Condition
3 − 4	Continuity
3 − 4	No continuity (When battery voltage is applied to terminals 1 and 2)
3 − 5	No continuity
3 − 5	Continuity (When battery voltage is applied to terminals 1 and 2)

If the continuity is not as specified, replace the switch.

6. Except double cab (w/ Day time running light): CHECK INTEGRATION RELAY (DRIVER SIDE J/B) CIRCUIT

(a) Disconnect the 1I, 1J, 1K, 1M and 1N driver side J/B connectors, and check the voltage or continuity of each terminal of the wire harness side connectors.

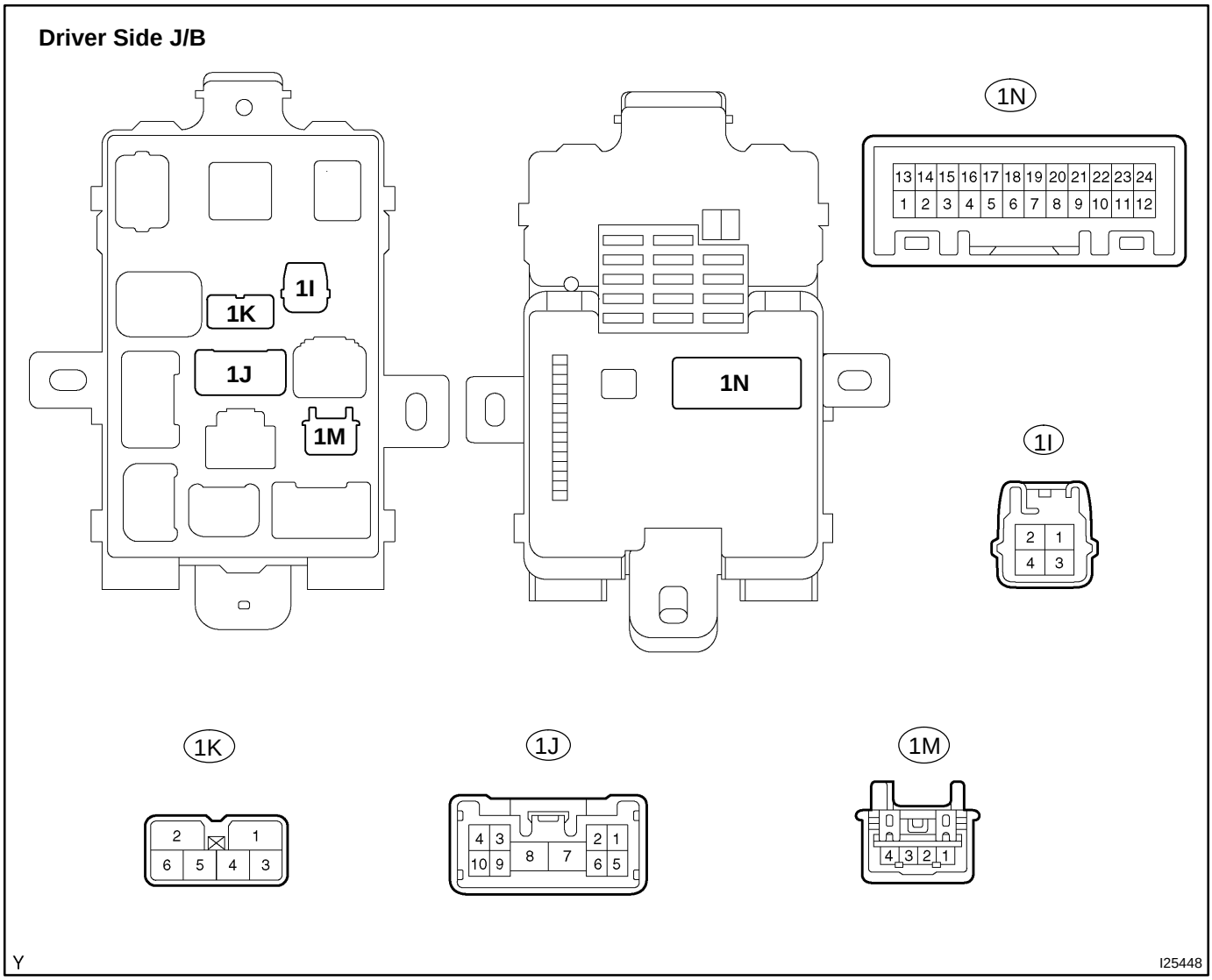

Tester Connection	Condition	Specified Condition
1I−2 − Body ground	Ignition switch LOCK or ACC	No voltage
1I−2 − Body ground	Ignition switch ON or START	10 − 14 V
1J−8 − Body ground	Constant	Continuity
1K−2 − Body ground	Constant	10 − 14 V
1K−5 − Body ground	Constant	10 − 14 V
1M−5 − Body ground	Fog light ON	10 − 14 V
1M−5 − Body ground	Fog light OFF	Below 1 V
1M−6 − Body ground	Constant	Continuity

Tester Connection	Condition	Specified Condition
1N−1 − Body ground	Parking lever released	No continuity
1N−1 − Body ground	Parking lever pulled up	Continuity
1N−2 − Body ground	Engine Stop	No voltage
1N−2 − Body ground	Engine Running	10 − 14 V
1N−3 − Body ground	Light control switch OFF or TAIL	No continuity
1N−3 − Body ground	Light control switch HEAD	Continuity
1N−4 − Body ground	Light control switch OFF or TAIL	No continuity
1N−4 − Body ground	Light control switch HEAD	Continuity
1N−7 − Body ground	Headlight dimmer switch low beam	No continuity
1N−7 − Body ground	Headlight dimmer switch high beam or flash	Continuity
1N−8 − Body ground	Headlight dimmer switch low or high beam	No continuity
1N−8 − Body ground	Headlight dimmer switch flash	Continuity
1N−13 − Body ground	Brake fluid level warning light OFF	No continuity
1N−13 − Body ground	Brake fluid level warning light ON	Continuity
1N−24 − Body ground	Constant	Continuity

If the result is not as specified, there may be a malfunction on the wire harness side.

(b) Reconnect the 1I, 1J, 1K, 1M and 1N J/B connectors, and check the voltage of each terminal of the connectors.

Tester Connection	Condition	Specified Condition
1M−3 − Body ground	Light control switch TAIL or HEAD	10 − 14 V
1M−3 − Body ground	Light control switch OFF	Below 1 V
1N−15 − Body ground	Light control switch TAIL or HEAD	10 − 14 V
1N−15 − Body ground	Light control switch OFF	Below 1 V

If the result is not as specified, the integration relay (drive side J/B) may have a malfunction.

(c) Remove the integration relay from the driver side J/B, and check the voltage or continuity of each terminal on the J/B side (see page BE−128).

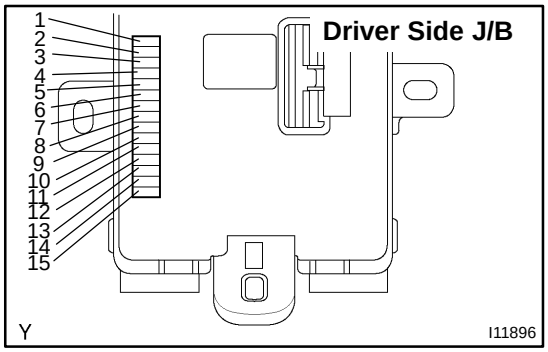

7. Except double cab (Daytime running light): CHECK INTEGRATION RELAY (DRIVER SIDE J/B) CIRCUIT

Disconnect the 1L driver side J/B connector, and check the voltage or continuity of each terminal of the wire harness side connector.

Driver Side J/B

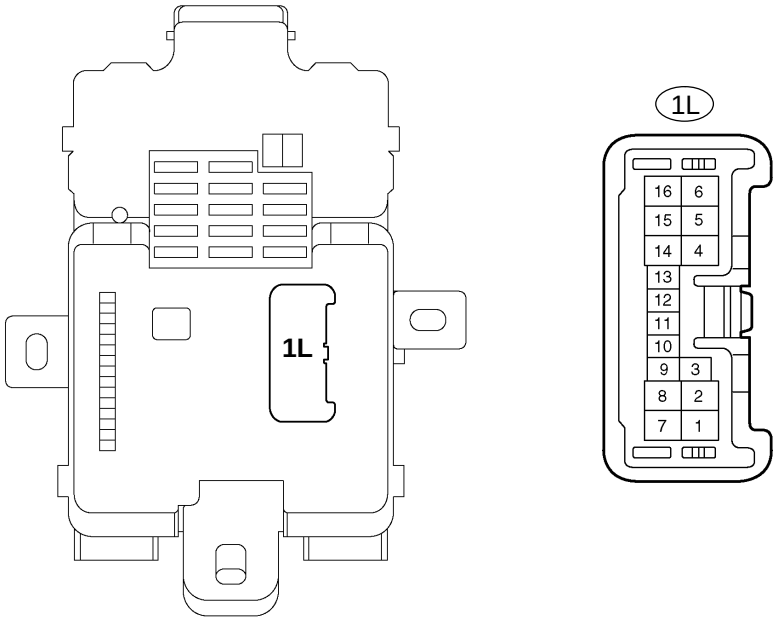

Tester Connection	Condition	Specified Condition
1L−5 − Body ground	Light control switch OFF	No continuity
1L−5 − Body ground	Light control switch TAIL or HEAD	Continuity
1L−6 − Body ground	Constant	10 − 14 V
1L−13 − Body ground	Light control switch OFF	No continuity
1L−13 − Body ground	Light control switch TAIL or HEAD	Continuity

If the result is as specified, there may be a malfunction on the wire harness side.

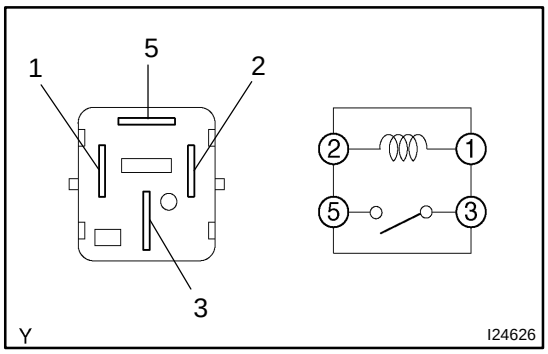

8. INSPECT DAYTIME RUNNING LIGHT NO. 4 RELAY (Marking: DRL NO. 4) CONTINUITY

Tester Connection	Specified Condition
3 − 5	No continuity
3 − 5	Continuity (When battery voltage is applied to terminals 1 and 2)

If the continuity is not as specified, replace the relay.

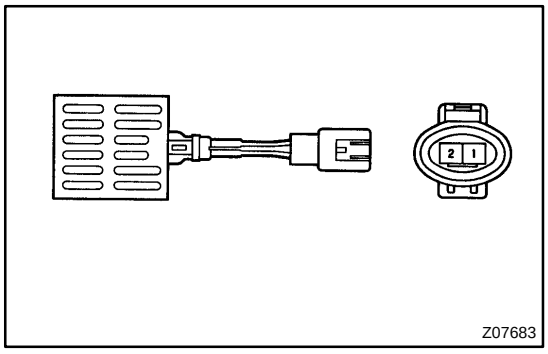

9. INSPECT DAYTIME RUNNING LIGHT RESISTOR

Tester Condition	Specified Condition
1 − 2	Approx. 337 m Ω

If the result is not as specified, replace the resistor.

HEADLIGHT AND TAILLIGHT SYSTEM

BE2K3−01

LOCATION

Double Cab

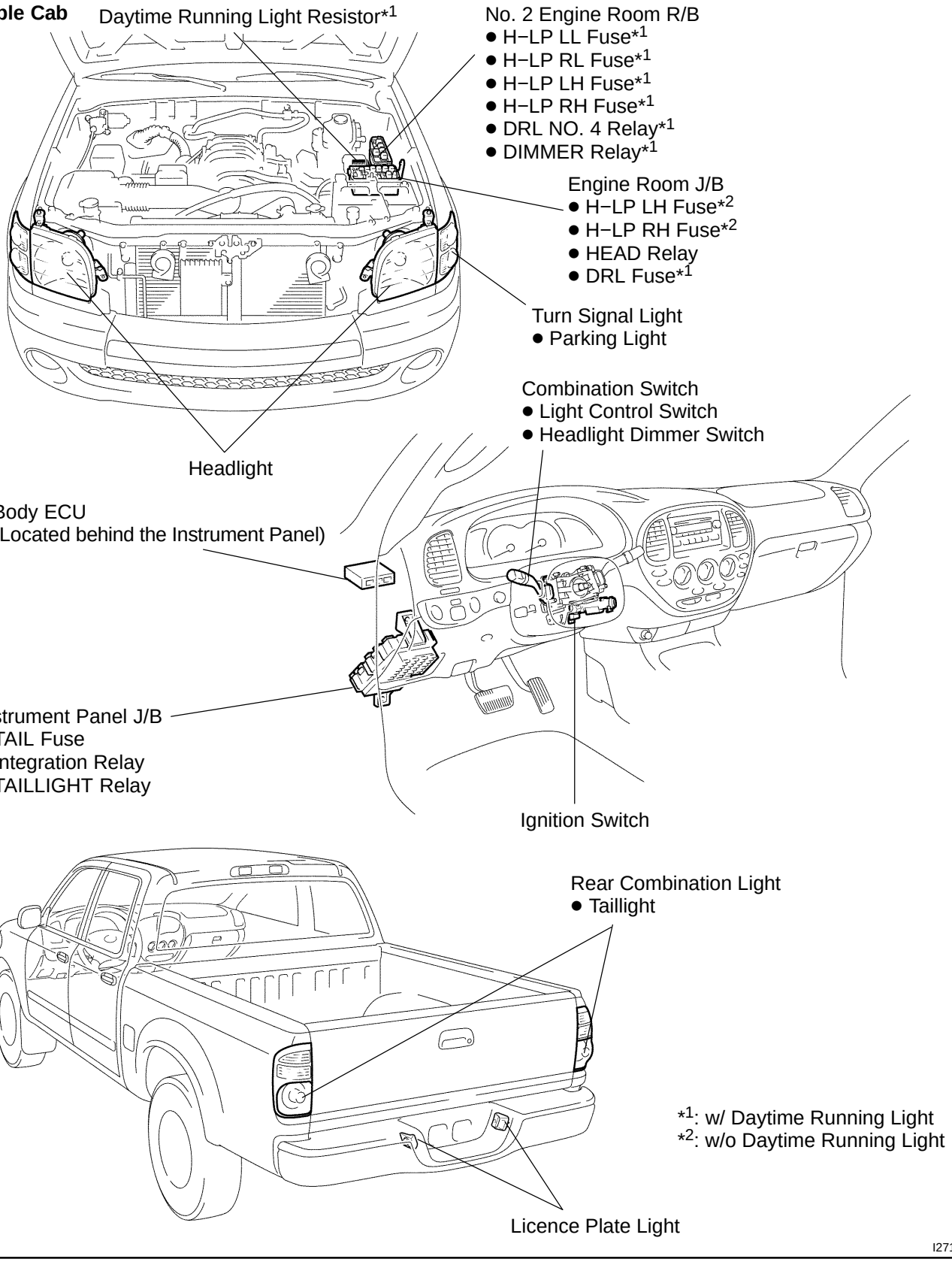

P

I27130

Except Double Cab

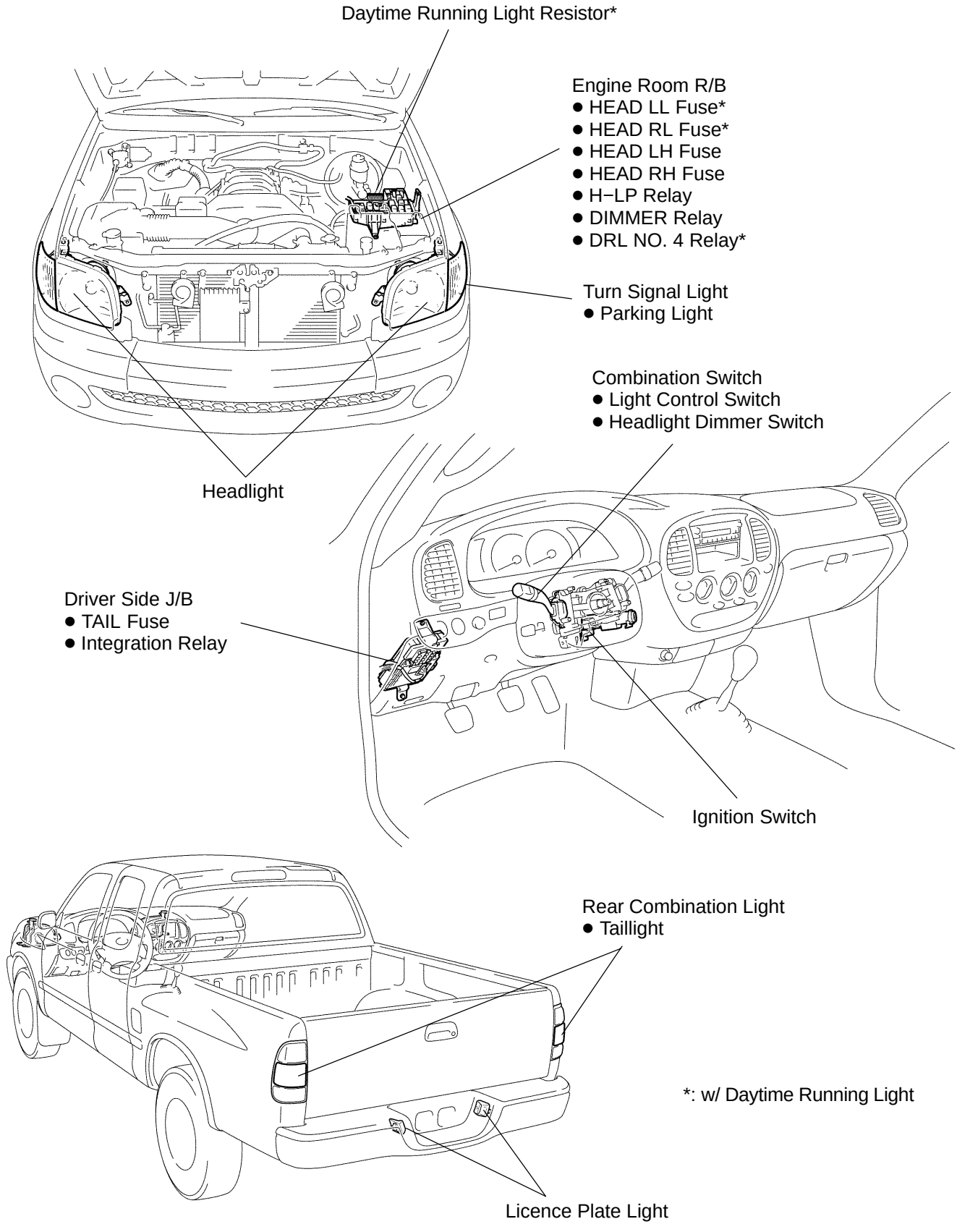

P

I25230

BE2K9−01

INSPECTION

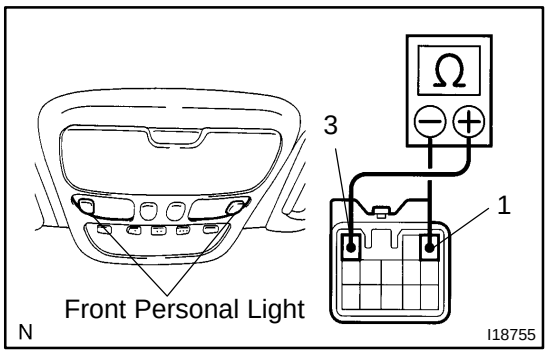

1. INSPECT FRONT PERSONAL LIGHT SWITCH CONTINUITY

(a) Disconnect the connector from the personal light.

(b) Push the personal light switch on, check that continuity exists between terminals 1 and 3.

If the continuity is not as specified, replace the bulb or light.

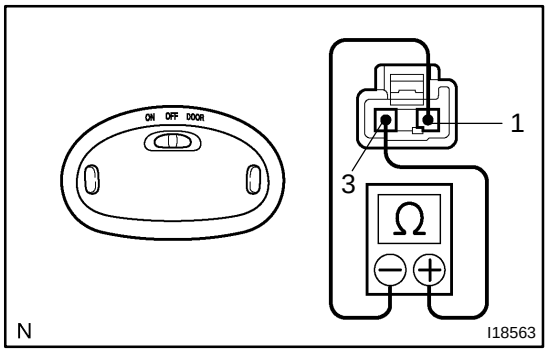

2. INSPECT DOME LIGHT SWITCH CONTINUITY

(a) Disconnect the connector from the dome light.

(b) Push the personal light switch on, check that continuity exists between terminals 1 and 3.

If the continuity is not as specified, replace the bulb or light.

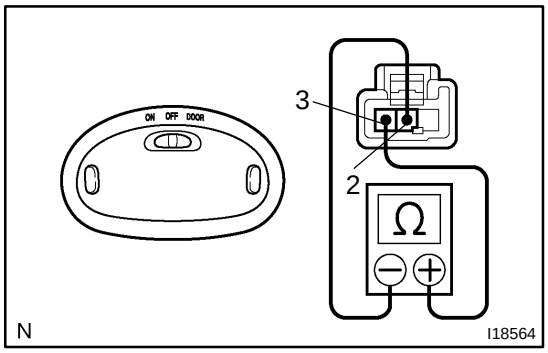

(c) Turn the light switch to the DOOR position, check that continuity exists between terminals 2 and 3.

If the continuity is not as specified, replace the light.

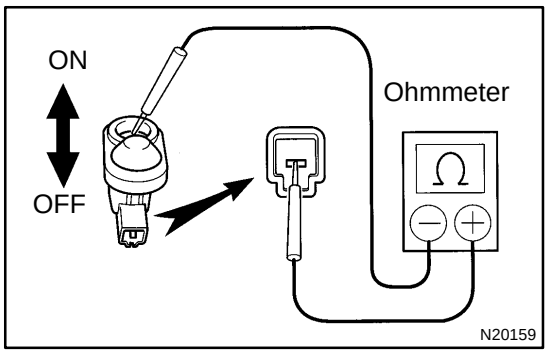

3. INSPECT DOOR COURTESY SWITCH CONTINUITY

(a) Check that continuity exists between the terminal and the switch body with the switch ON (switch pin released: door opened).

(b) Check that no continuity exists between the terminal and the switch body with the switch OFF (switch pin pushed in: door closed).

If the continuity is not as specified, replace the switch.

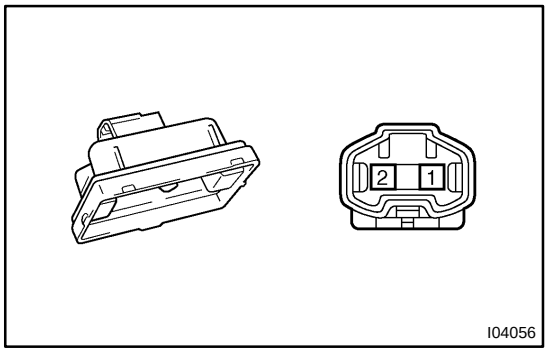

4. INSPECT DOOR COURTESY LIGHT CONTINUITY

Check that continuity exists between terminals 1 and 2.

If the continuity is not as specified, replace the light assembly or bulb.

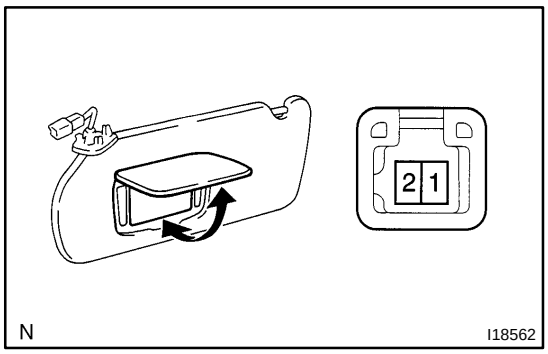

5. INSPECT VANITY LIGHT CONTINUITY

Switch Position	Tester Connection	Specified Condition
OFF (Closed)	1 − 2	No continuity
ON (Opened)	1 − 2	Continuity

If the continuity is not as specified, replace the bulb or vanity light.

INTERIOR LIGHT SYSTEM (Double Cab)

BE2K8−01

LOCATION

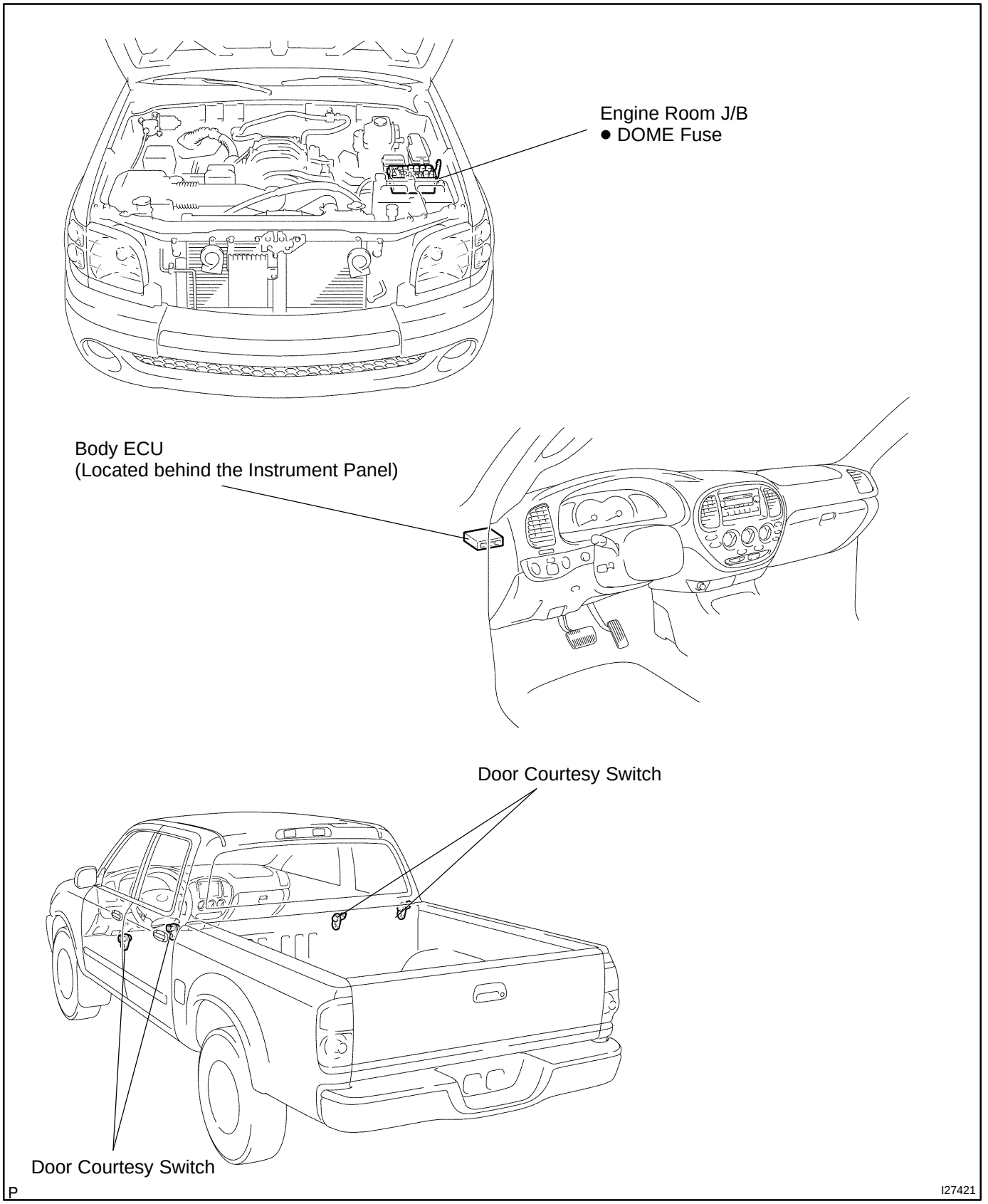

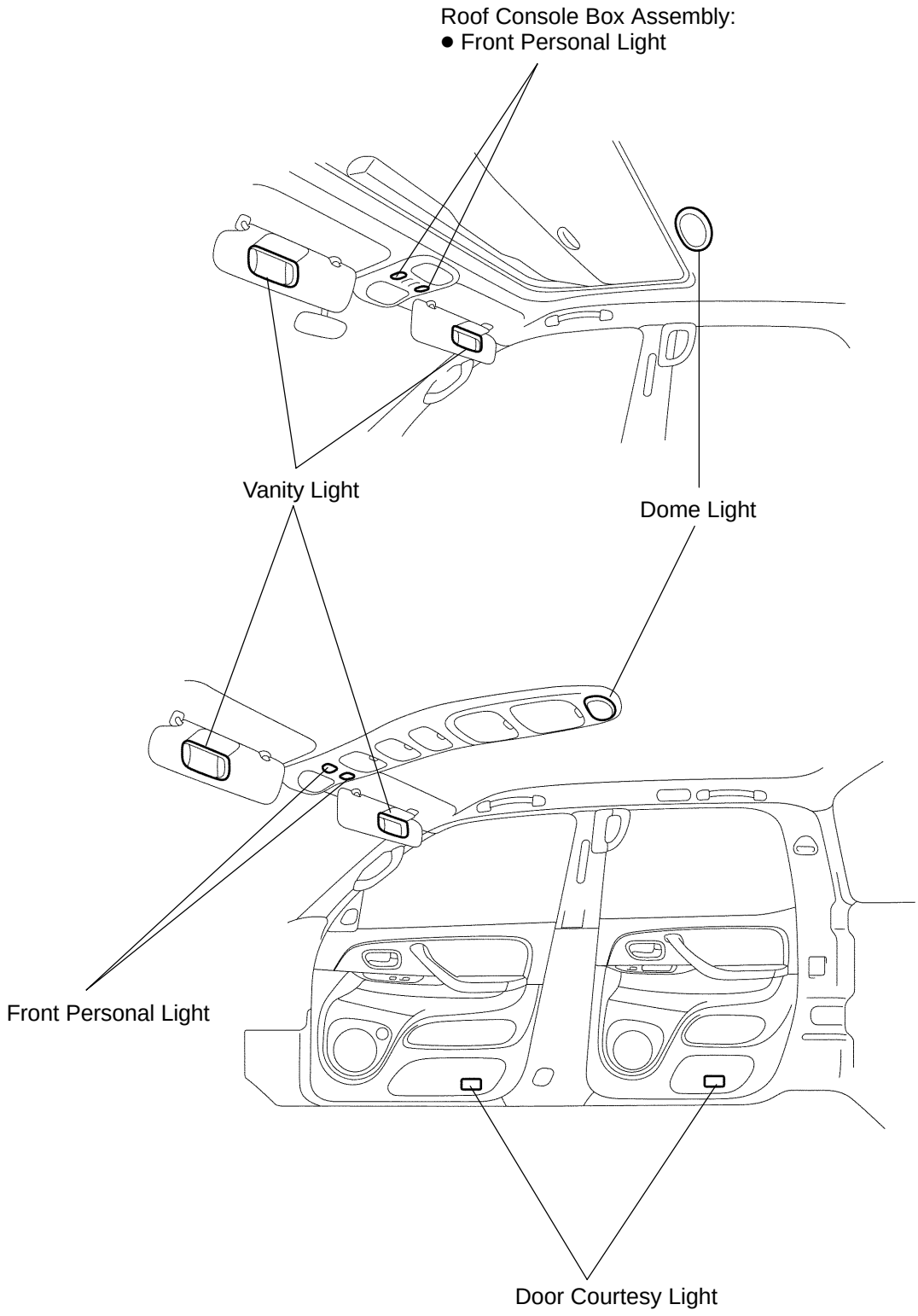
Roof Console Box Assembly:
● Front Personal Light
Vanity Light
Dome Light
Front Personal Light
Door Courtesy Light
I27063

P

BE2KB−01

INSPECTION

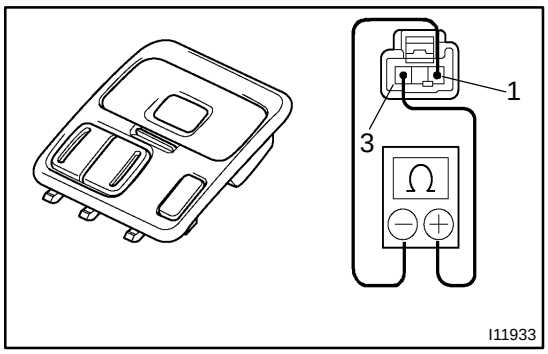

1. INSPECT FRONT PERSONAL LIGHT CONTINUITY

(a) Disconnect the connector from the personal light.

(b) Push the personal light switch ON, check that continuity exists between terminals 3 and 1.

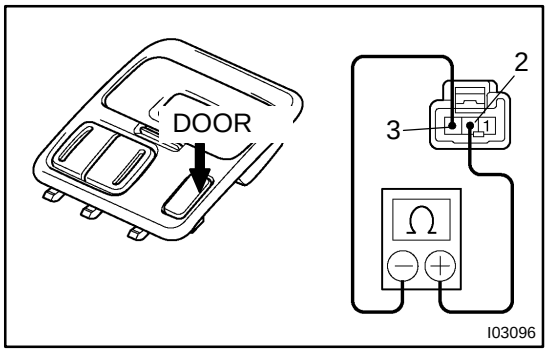

(c) Turn the light switch to the DOOR position, check that continuity exists between terminals 2 and 3.

If the result is not as specified, replace the bulb or light.

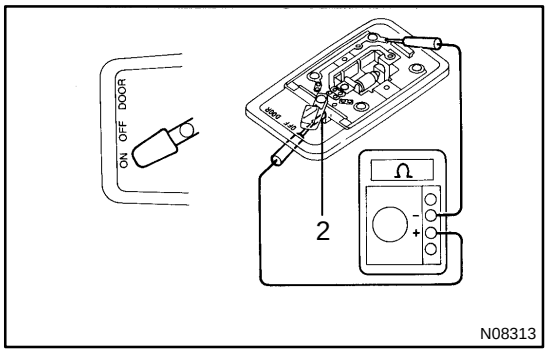

2. INSPECT ROOM LIGHT CONTINUITY

(a) Disconnect the connector from the light.

(b) Turn the interior light switch ON, check that continuity exists between terminal 2 and body ground.

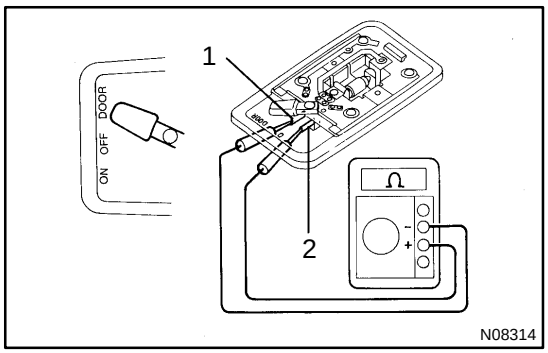

(c) Turn the light switch to the DOOR position, check that continuity exists between terminals 1 and 2.

If the result is not as specified, replace the bulb or light.

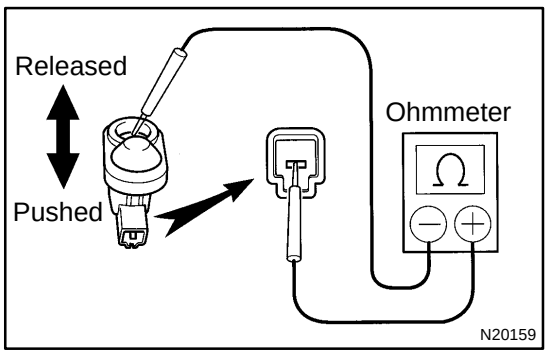

3. INSPECT (FRONT) DOOR COURTESY SWITCH CONTINUITY

(a) Check that continuity exists between the terminal and the switch body with the switch ON (switch pin released: door opened).

(b) Check that no continuity exists between terminals and the switch body with the switch OFF (switch pin pushed in: door closed).

If the result is not as specified, replace the switch.

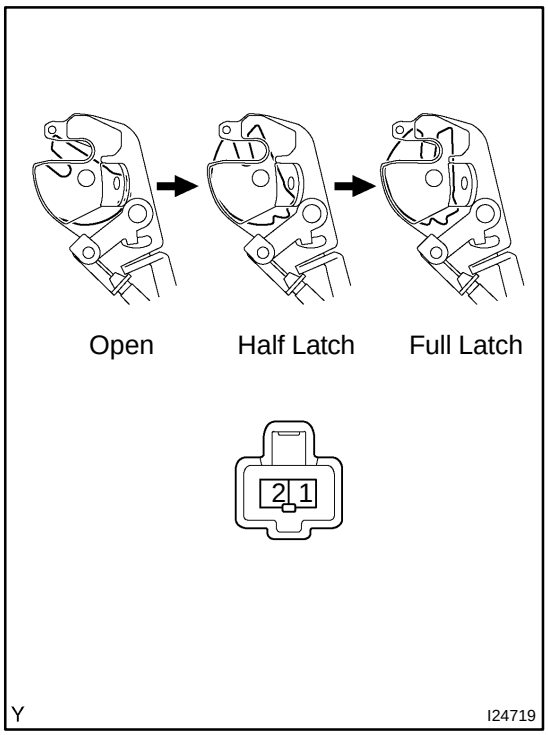

4. Access door:
INSPECT REAR UPPER DOOR COURTESY SWITCH CONTINUITY

Switch Position	Tester Connection	Specified Condition
ON (Open)	1 − 2	Continuity
ON (Half latch)	1 − 2	Continuity
OFF (Full latch)	1 − 2	No continuity

If the continuity is not as specified, replace the upper door lock.

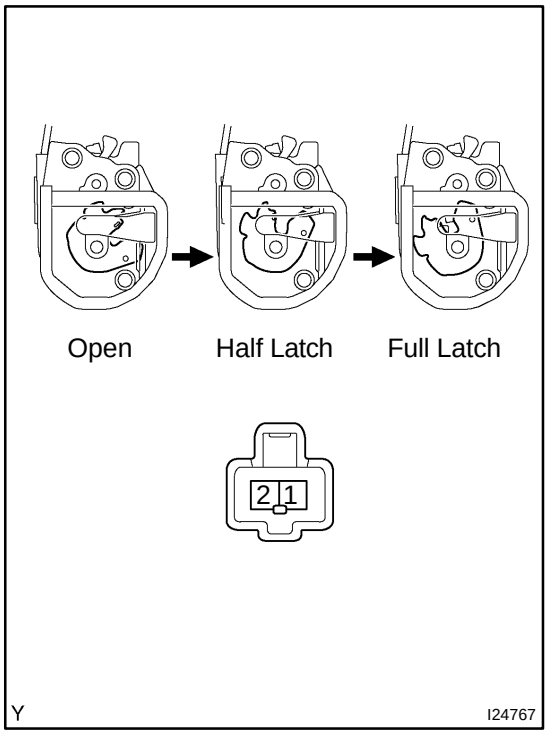

5. Access door:
INSPECT REAR LOWER DOOR COURTESY SWITCH CONTINUITY

Switch Position	Tester Connection	Specified Condition
ON (Open)	1 − 2	Continuity
ON (Half latch)	1 − 2	Continuity
OFF (Full latch)	1 − 2	No continuity

If the continuity is not as specified, replace the lower door lock.

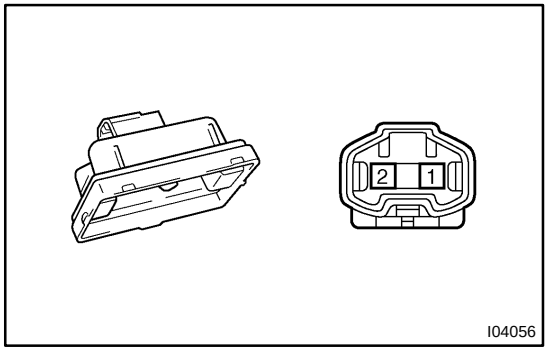

6. INSPECT DOOR COURTESY LIGHT CONTINUITY

Check that continuity exists between terminals 1 and 2.
If the continuity is not as specified, replace the bulb or light.

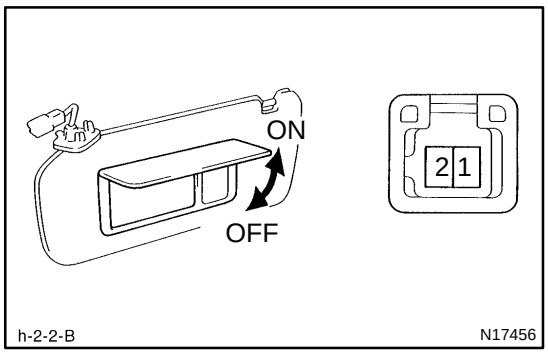

7. INSPECT VANITY LIGHT CONTINUITY

Switch Position	Tester Connection	Specified Condition
OFF (Closed)	1 − 2	No continuity
ON (Opened)	1 − 2	Continuity

If the continuity is not as specified, replace the bulb or vanity light.

INTERIOR LIGHT SYSTEM (Except Double Cab)

BE2KA−01

LOCATION

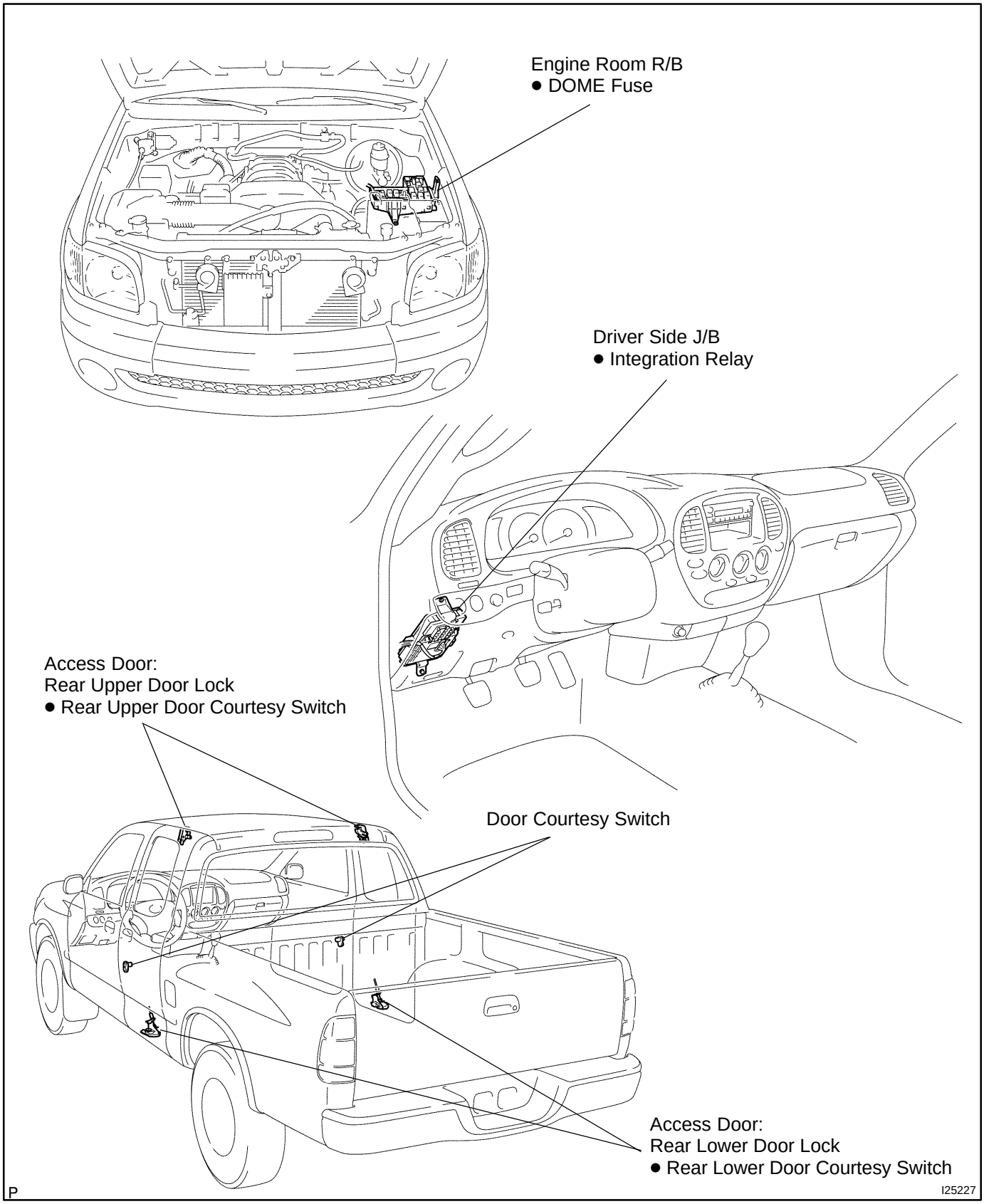

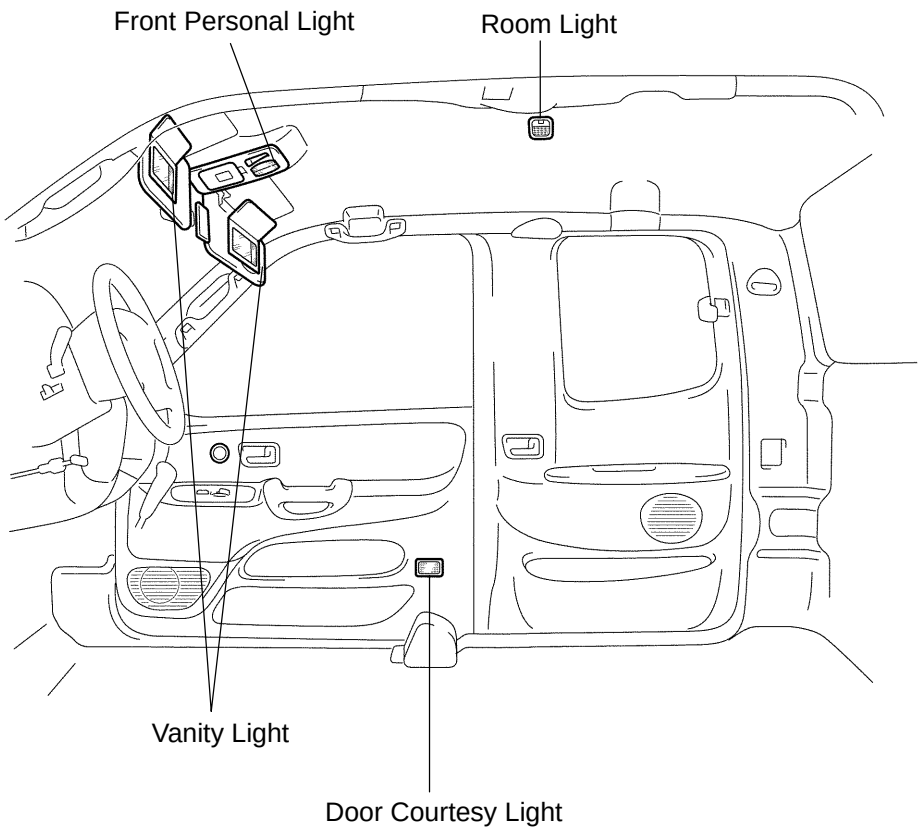
Front Personal Light
Room Light
Vanity Light
Door Courtesy Light

I10550

BE2K2–01

INSPECTION

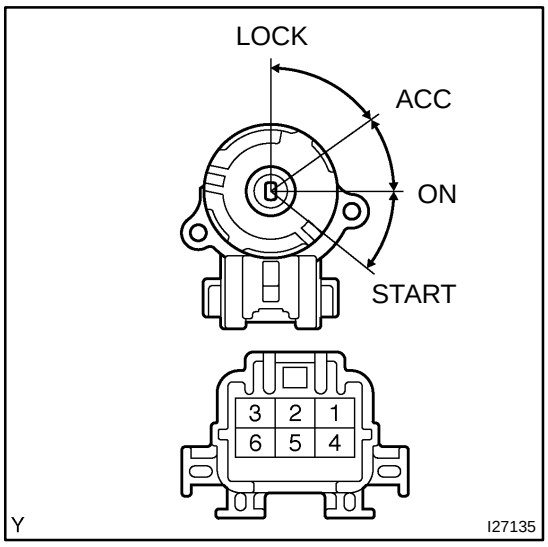

1. Double cab:
INSPECT IGNITION SWITCH CONTINUITY

Switch Position	Tester Connection	Specified Condition
ACC	1 – 3	Continuity
ON	1 – 2 – 3 5 – 6	Continuity
START	1 – 2 4 – 5 – 6	Continuity

If the continuity is not as specified, replace the switch.

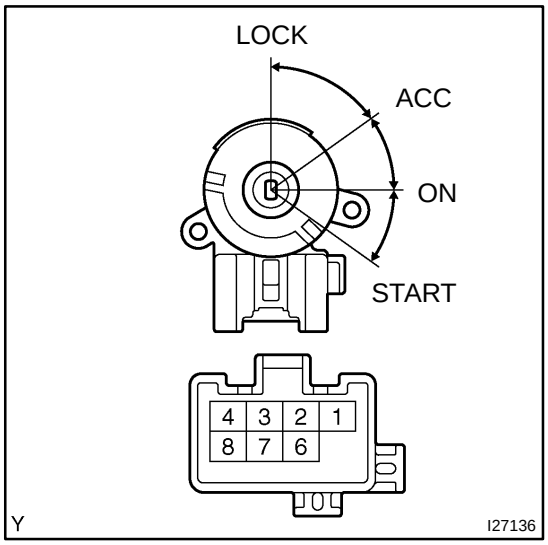

2. Except double cab:
INSPECT IGNITION SWITCH CONTINUITY

Switch Position	Tester Connection	Specified Condition
ACC	2 – 3	Continuity
ON	2 – 3 – 4 6 – 7	Continuity
START	1 – 2 – 4 6 – 7 – 8	Continuity

If the continuity is not as specified, replace the switch.

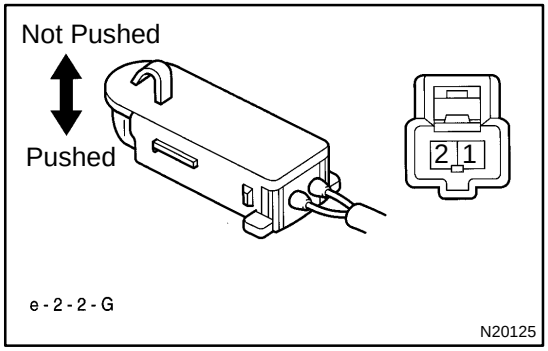

3. INSPECT KEY UNLOCK WARNING SWITCH CONTINUITY

Switch Position	Tester Connection	Specified Condition
Switch not pushed (Key removed)	1 – 2	No continuity
Switch pushed (Key inserted)	1 – 2	Continuity

If the continuity is not as specified, replace the switch.

IGNITION SWITCH AND KEY UNLOCK WARNING SWITCH

BE02W−05

LOCATION

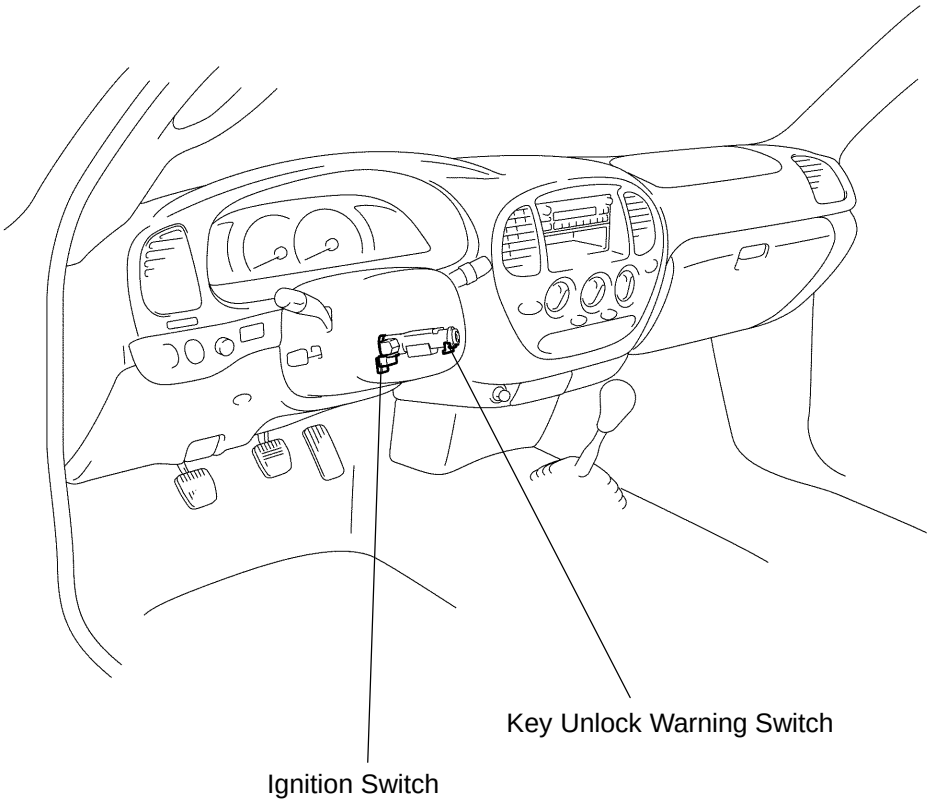

P

I27137

BE2LD−01

INSPECTION

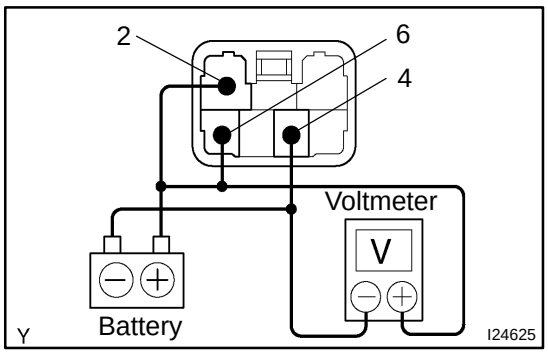

1. INSPECT MIRROR HEATER SWITCH TIMER OPERATION

(a) Connect the positive (+) lead from the battery to terminals 2 and 6 of the mirror heater switch and the negative (−) lead to terminal 4.

(b) Connect the positive (+) lead from the voltmeter to terminal 6 of the mirror heater switch and the negative (−) lead to terminal 4.

(c) When the switch is OFF, the voltage should be approximately12 V.

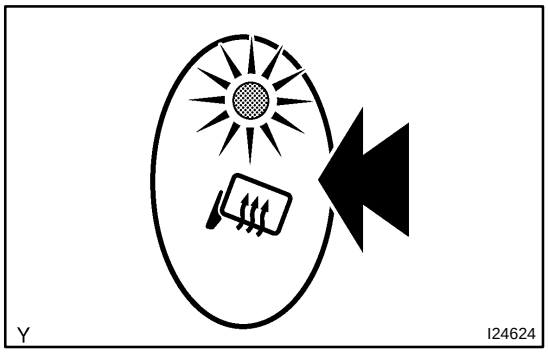

(d) Push the mirror heater switch on and check that the indicator lights up and that the voltage is less than 1 V.

(e) After 15 minutes, check that the switch is OFF and the voltage is approximately 12 V.

If the result is not as specified, replace the switch.

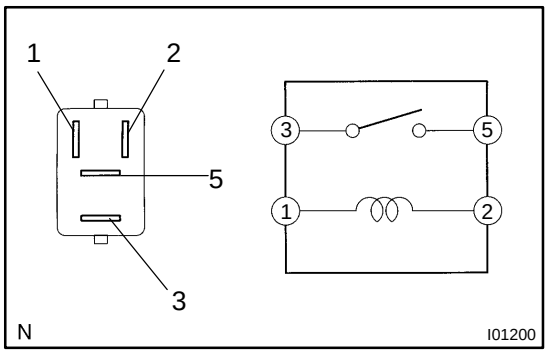

2. INSPECT MIRROR HEATER RELAY (Marking : MIR HTR) CONTINUITY

Tester Connection	Specified Condition
3 − 5	No continuity
3 − 5	Continuity (When battery voltage is applied to terminals 1 and 2)

If the continuity is not as specified, replace the relay.

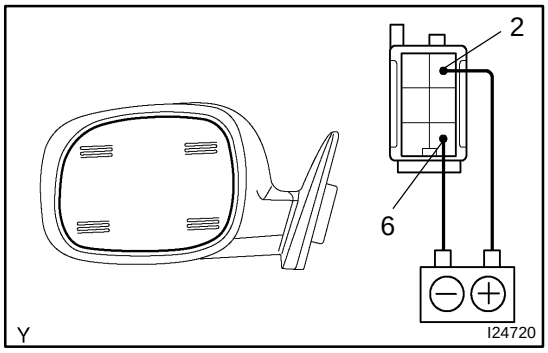

3. INSPECT MIRROR HEATER OPERATION

(a) Connect the positive (+) lead from the battery to terminal 2 and the negative (−) lead to terminal 6.

(b) Check that the mirror becomes warm.

HINT:

It will take a short time for the mirror to become warm.

If operation is not as specified, replace the mirror.

MIRROR HEATER SYSTEM (Except Double Cab)

BE2LC−01

LOCATION

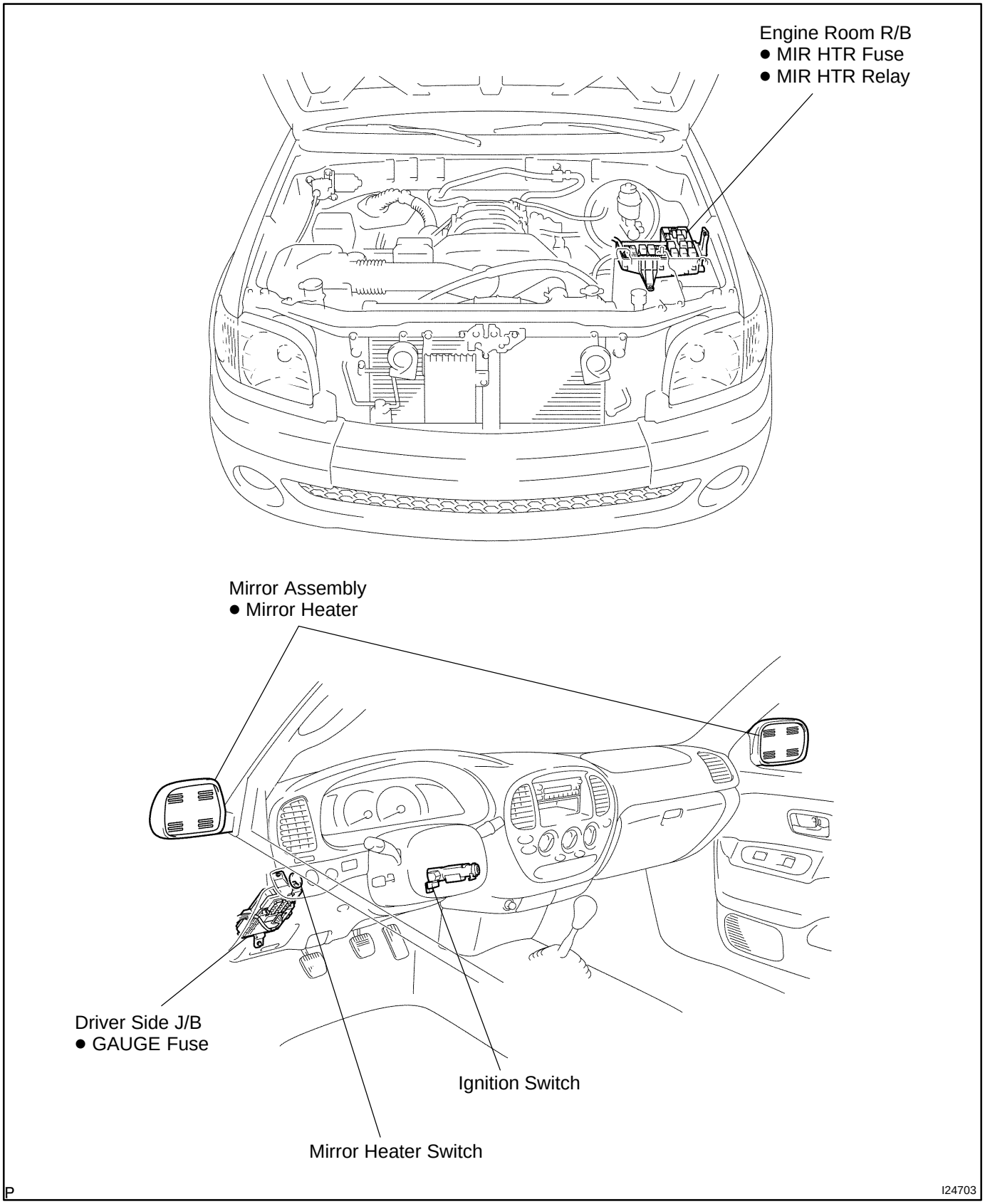

BE2LW−02

INSPECTION

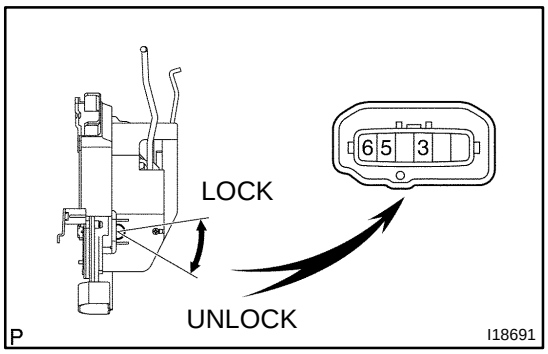

1. INSPECT DRIVER DOOR KEY LOCK AND UNLOCK SWITCH CONTINUITY

Switch Position	Tester Connection	Specified Condition
LOCK	3 − 5	Continuity
OFF	3 − 5, 3 − 6	No continuity
UNLOCK	3 − 6	Continuity

If the continuity is not as specified, replace the door lock assembly.

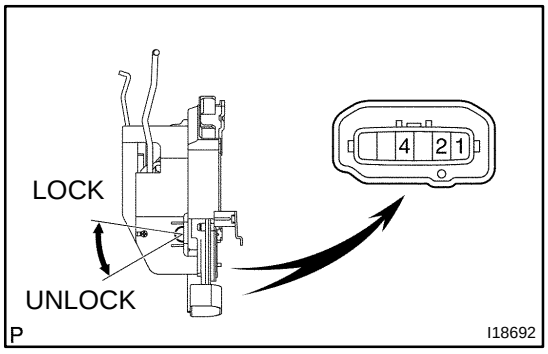

2. INSPECT PASSENGER SIDE DOOR KEY LOCK AND UNLOCK SWITCH CONTINUITY

Switch Position	Tester Connection	Specified Condition
LOCK	2 − 4	Continuity
OFF	1 − 4, 2 − 4	No continuity
UNLOCK	1 − 4	Continuity

If the continuity is not as specified, replace the door lock assembly.

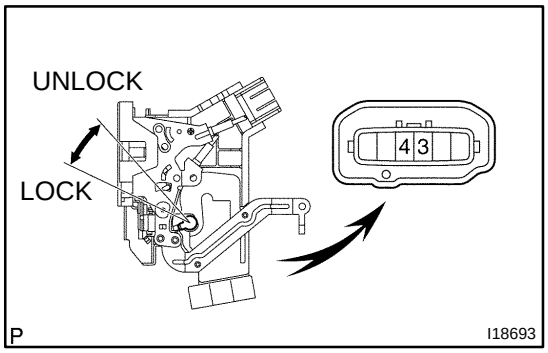

3. INSPECT DRIVER SIDE DOOR UNLOCK DETECTION SWITCH CONTINUITY

Switch Position	Tester Connection	Specified Condition
OFF (Door lock set to LOCK)	3 − 4	No continuity
ON (Door lock set to UNLOCK)	3 − 4	Continuity

If the continuity is not as specified, replace the door lock assembly.

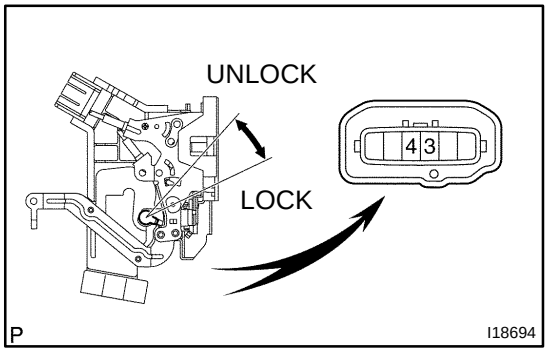

4. INSPECT PASSENGER SIDE DOOR UNLOCK DETECTION SWITCH CONTINUITY

Switch Position	Tester Connection	Specified Condition
OFF (Door lock set to LOCK)	3 − 4	No continuity
ON (Door lock set to UNLOCK)	3 − 4	Continuity

If the continuity is not as specified, replace the door lock assembly.

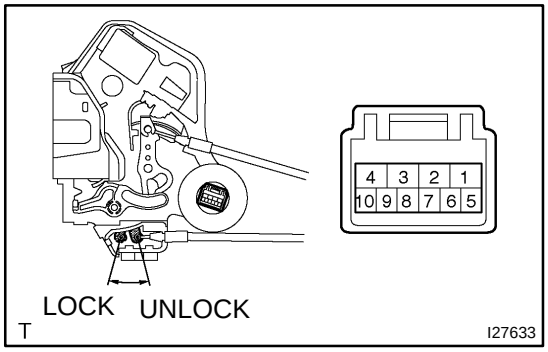

5. INSPECT REAR LEFT DOOR UNLOCK DETECTION SWITCH CONTINUITY

Switch Position	Tester Connection	Specified Condition
OFF (Door lock set to LOCK)	6 – 9	No continuity
ON (Door lock set to UNLOCK)	6 – 9	Continuity

If the continuity is not as specified, replace the door lock assembly.

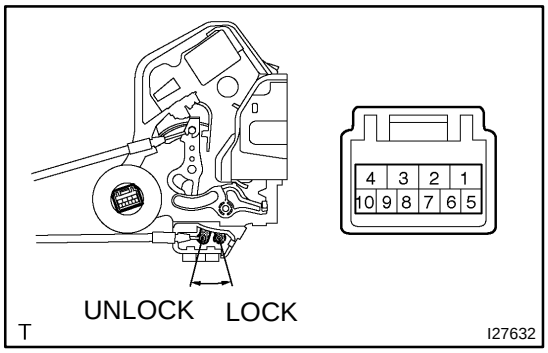

6. INSPECT REAR RIGHT DOOR UNLOCK DETECTION SWITCH CONTINUITY

Switch Position	Tester Connection	Specified Condition
OFF (Door lock set to LOCK)	6 – 9	No continuity
ON (Door lock set to UNLOCK)	6 – 9	Continuity

If the continuity is not as specified, replace the door lock assembly.

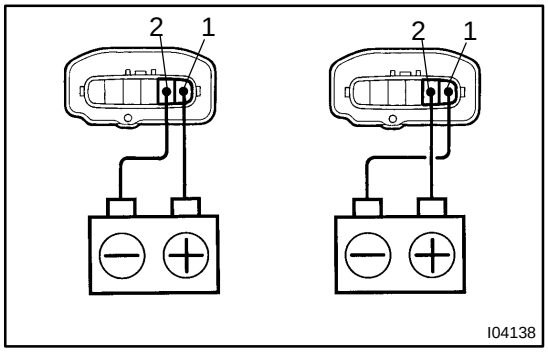

7. INSPECT DRIVER SIDE DOOR LOCK MOTOR OPERATION

(a) Connect the positive (+) lead from the battery to terminal 1 and the negative (−) lead to terminal 2, and check that the door lock cable moves to the UNLOCK position.

(b) Reverse the polarity and check that the door lock cable moves to the LOCK position.

If operation is not as specified, replace the door lock assembly.

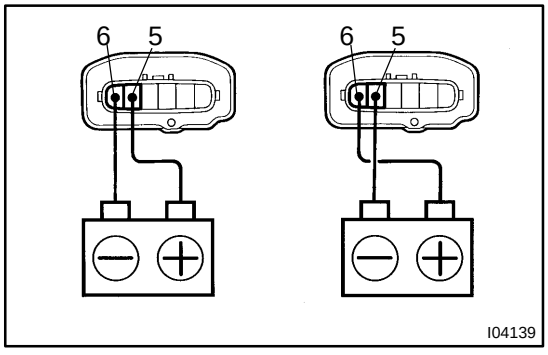

8. INSPECT PASSENGER SIDE DOOR LOCK MOTOR OPERATION

(a) Connect the positive (+) lead from the battery to terminal 5 and the negative (−) lead to terminal 6, and check that the door lock cable moves to the UNLOCK position.

(b) Reverse the polarity and check that the door lock cable moves to the LOCK position.

If operation is not as specified, replace the door lock assembly.

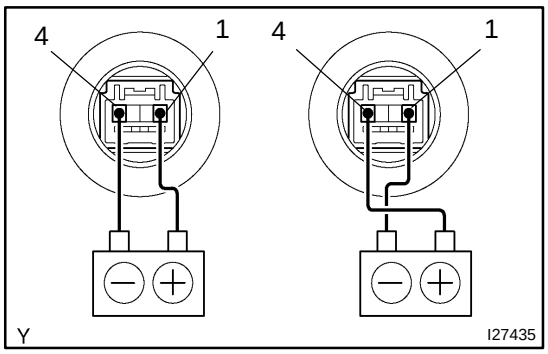

9. INSPECT REAR LEFT SIDE DOOR LOCK MOTOR OPERATION

(a) Connect the positive (+) lead from the battery to terminal 1 and the negative (−) lead to terminal 4, and check that the door lock cable moves to the UNLOCK position.

(b) Reverse the polarity and check that the door lock cable moves to the LOCK position.

If operation is not as specified, replace the door lock assembly.

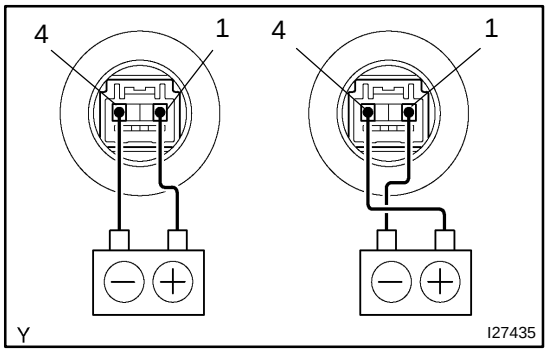

10. INSPECT REAR RIGHT SIDE DOOR LOCK MOTOR OPERATION

(a) Connect the positive (+) lead from the battery to terminal 1 and the negative (−) lead to terminal 4, and check that the door lock cable moves to the UNLOCK position.

(b) Reverse the polarity and check that the door lock cable moves to the LOCK position.

If operation is not as specified, replace the door lock assembly.

POWER DOOR LOCK CONTROL SYSTEM (Double Cab)

BE2LV–01

LOCATION

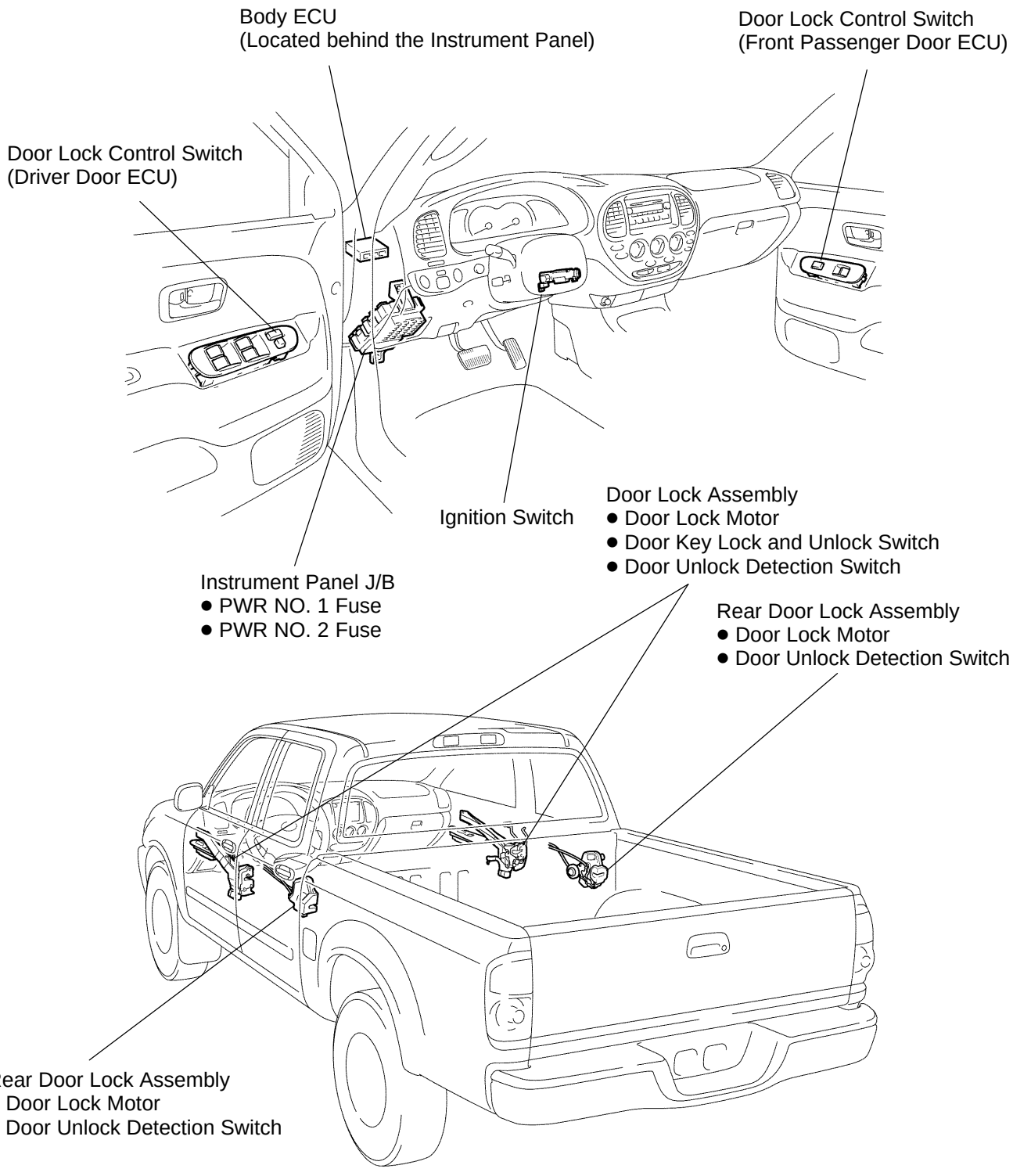

BE2LL−01

INSPECTION

1. Driver side:
INSPECT DOOR LOCK CONTROL SWITCH (POWER WINDOW MASTER SWITCH) CONTINUITY

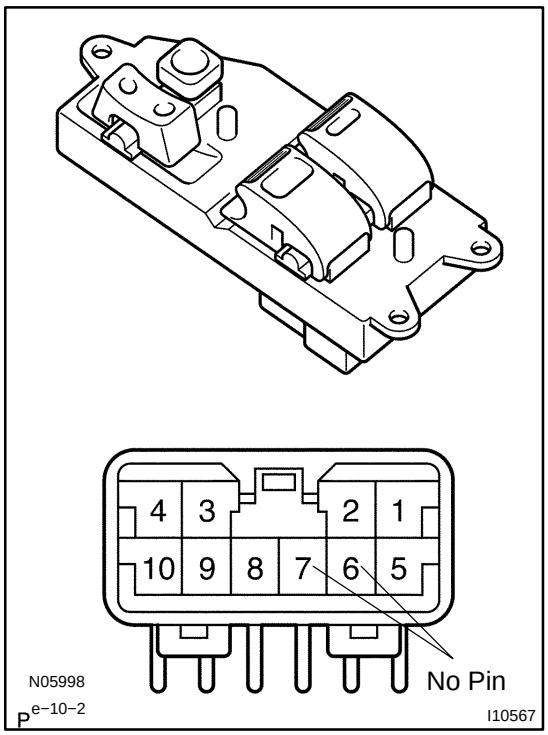

Switch Position	Tester Connection	Specified Condition
LOCK	1 − 2	Continuity
OFF	1 − 2, 1 − 5	No continuity
UNLOCK	1 − 5	Continuity

If the continuity is not as specified, replace the switch.

2. Passenger side:
INSPECT DOOR LOCK CONTROL SWITCH CONTINUITY

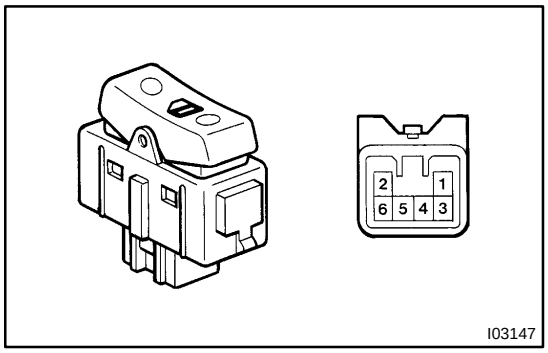

Switch Position	Tester Connection	Specified Condition
LOCK	3 − 6	Continuity
OFF	3 − 5, 3 − 6	No continuity
UNLOCK	3 − 5	Continuity

If the continuity is not as specified, replace the switch.

3. INSPECT DOOR KEY LOCK AND UNLOCK SWITCH CONTINUITY

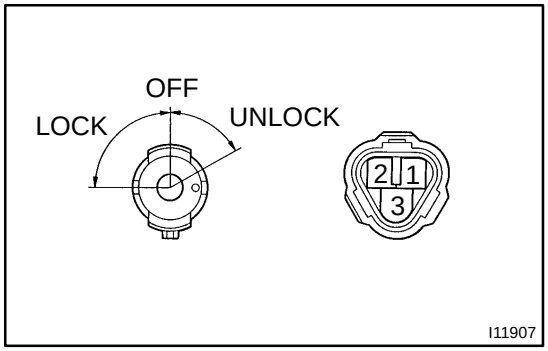

Switch Position	Tester Connection	Specified Condition
LOCK	1 − 2	Continuity
OFF	1 − 2, 2 − 3	No continuity
UNLOCK	2 − 3	Continuity

If the continuity is not as specified, replace the switch.

4. INSPECT DOOR UNLOCK DETECTION SWITCH CONTINUITY

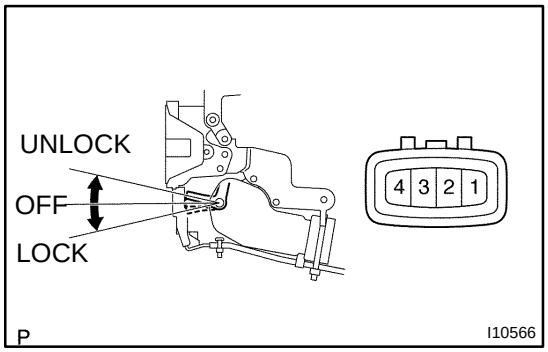

Switch Position	Tester Connection	Specified Condition
OFF (Door lock set to LOCK)	1 − 4	No continuity
ON (Door lock set to UNLOCK)	1 − 4	Continuity

If the continuity is not as specified, replace the actuator.

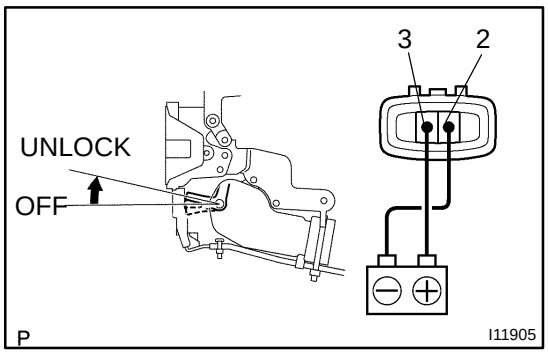

5. INSPECT DOOR LOCK ACTUATOR OPERATION

(a) Connect the positive (+) lead from the battery to terminal 3 and the negative (−) lead to terminal 2, and check that the door lock link moves to the UNLOCK position.

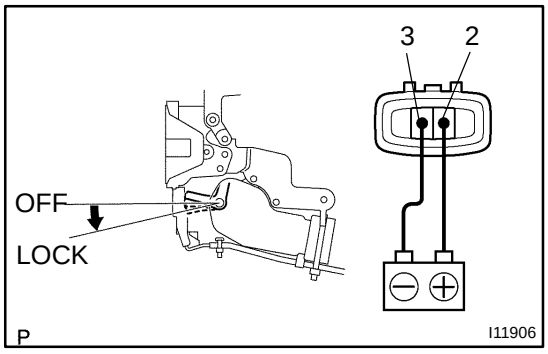

(b) Reverse the polarity and check that the door lock link moves to the LOCK position.

If operation is not as specified, replace the actuator.

6. w/ Daytime running light:
CHECK INTEGRATION RELAY (DRIVER SIDE J/B) CIRCUIT

(a) Disconnect the 1H, 1I, 1J, 1K and 1N driver side J/B connectors, and check the voltage or continuity of each terminal of the wire harness side connectors.

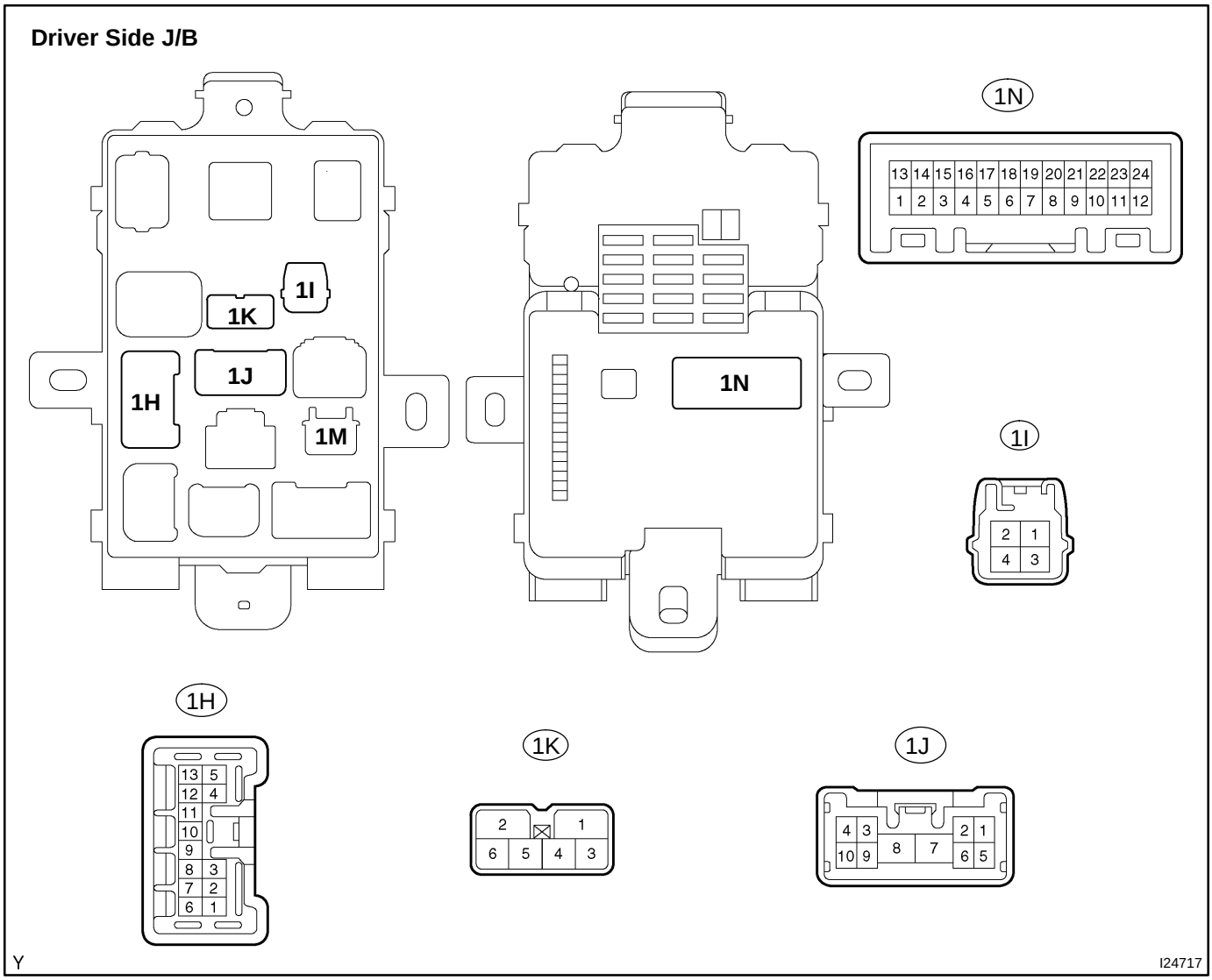

Tester Connection	Condition	Specified Condition
1H−6 − Body ground	Passenger's door opened	Continuity
1H−6 − Body ground	Passenger's door closed	No continuity
1H−7 − Body ground	Driver's door opened	Continuity
1H−7 − Body ground	Driver's door closed	No continuity
1I−2 − Body ground	Ignition switch LOCK or ACC	Below 1 V
1I−2 − Body ground	Ignition switch ON or START	10 − 14 V
1J−8 − Body ground	Constant	Continuity
1K−2 − Body ground	Constant	10 − 14 V

Tester Connection	Condition	Specified Condition
1N−5 − Body ground	Cargo light switch OFF	No continuity
1N−5 − Body ground	Cargo light switch ON	Continuity
1N−6 − Body ground	Key unlock warning switch OFF (Ignition key removed)	No continuity
1N−6 − Body ground	Key unlock warning switch ON (Ignition key inserted)	Continuity
1N−9 − Body ground	Driver's door unlock detection switch OFF	No continuity
1N−9 − Body ground	Driver's door unlock detection switch ON	Continuity
1N−10 − Body ground	Passenger's door unlock detection switch OFF	No continuity
1N−10 − Body ground	Passenger's door unlock detection switch ON	Continuity
1N−19 − Body ground	Door lock manual switch and door lock control switch LOCK	Continuity
1N−19 − Body ground	Door lock manual switch and door lock control switch OFF or UNLOCK	No continuity
1N−20 − Body ground	Door key lock and unlock switch LOCK	Continuity
1N−20 − Body ground	Door key lock and unlock switch OFF or UN-LOCK	No continuity
1N−21 − Body ground	Door lock manual switch or door lock control switch UNLOCK	Continuity
1N−21 − Body ground	Door lock manual switch and door lock control switch OFF or LOCK	No continuity
1N−22 − Body ground	Front passenger's door key lock and unlock switch UNLOCK	Continuity
1N−22 − Body ground	Front passenger's door key lock and unlock switch LOCK or OFF	No continuity
1N−23 − Body ground	Driver's door key lock and unlock switch UN-LOCK	Continuity
1N−23 − Body ground	Driver's door key lock and unlock switch LOCK or OFF	No continuity
1N−24 − Body ground	Constant	Continuity

If the result is not as specified, there may be a malfunction on the wire harness side.

(b) Reconnect the 1H, 1I, 1J, 1K and 1N driver side J/B connectors, and check the voltage of each terminal of the connectors.

Tester Connection	Condition	Specified Condition
1H−8 − Body ground	Door lock manual switch LOCK or UNLOCK	0 V → 10 − 14 V → Below 1 V
1H−9 − Body ground	Door lock manual switch LOCK or UNLOCK	0 V → 10 − 14 V → Below 1 V

If the result is not as specified, the integration relay (driver side J/B) may malfunction.

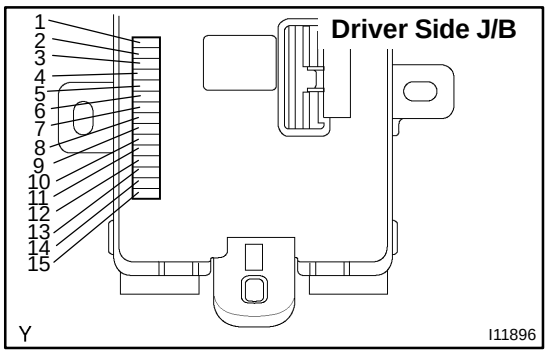

(c) Remove the integration relay from the driver side J/B, and check the voltage or continuity on each terminal of the driver side J/B side.

Tester Connection	Condition	Specified Condition
1 − Body ground	Constant	Continuity
2 − Body ground	Constant	Continuity
3 − Body ground	Constant	10 − 14 V
4 − Body ground	Constant	Continuity
5 − Body ground	Constant	10 − 14 V
6 − Body ground	Constant	10 − 14 V
7 − Body ground	Constant	10 − 14 V
8 − Body ground	Constant	Continuity
10 − Body ground	Ignition switch ON	10 − 14 V
11 − Body ground	Constant	Continuity
12 − Body ground	Constant	No continuity
13 − Body ground	Constant	No continuity
14 − Body ground	Left door courtesy switch OFF (Door closed)	No continuity
14 − Body ground	Left door courtesy switch ON (Door opened)	Continuity
15 − Body ground	Right door courtesy switch OFF (Door closed)	No continuity
15 − Body ground	Right door courtesy switch OFF (Door opened)	Continuity

If the result is not as specified, replace the driver side J/B.

7. w/o Daytime running light:
CHECK INTEGRATION RELAY (DRIVER SIDE J/B) CIRCUIT

(a) Disconnect the 1H, 1I, 1K, 1J and 1L driver side J/B connectors, and check the voltage or continuity of each terminal of the wire harness side connectors.

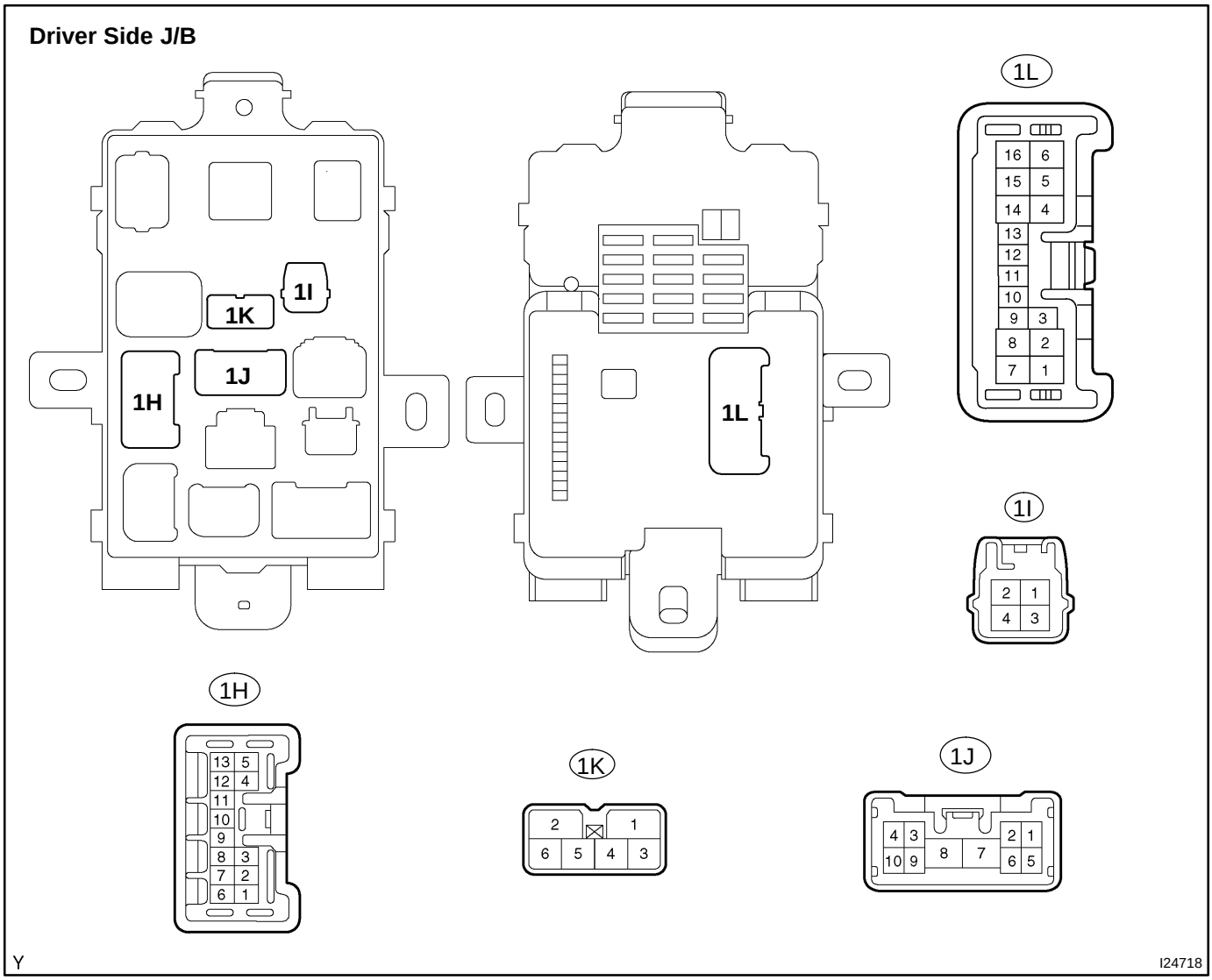

Tester Connection	Condition	Specified Condition
1H−6 − Body ground	Passenger's door opened	Continuity
1H−6 − Body ground	Passenger's door closed	No continuity
1H−7 − Body ground	Driver's door opened	Continuity
1H−7 − Body ground	Driver's door closed	No continuity
1I−2 − Body ground	Ignition switch LOCK or ACC	No voltage
1I−2 − Body ground	Ignition switch ON or START	10 − 14 V
1J−8 − Body ground	Constant	Continuity
1K−2 − Body ground	Constant	10 − 14 V

Tester Connection	Condition	Specified Condition
1L−1 − Body ground	Door lock manual switch, door lock control switch or door key lock and unlock switch LOCK	Continuity
1L−1 − Body ground	Door lock manual switch and door lock control switch and door key lock and unlock switch OFF or UNLOCK	No continuity
1L−2 − Body ground	Door lock manual switch, door lock control switch or front passenger's door key lock and unlock switch UNLOCK	Continuity
1L−2 − Body ground	Door lock manual switch, door lock control switch and front passenger's door key lock and unlock switch OFF or LOCK	No continuity
1L−3 − Body ground	Driver's door key lock and unlock switch UN-LOCK	Continuity
1L−3 − Body ground	Driver's door key lock and unlock switch LOCK or OFF	No continuity
1L−6 − Body ground	Key unlock warning switch OFF (Ignition key removed)	No continuity
1L−6 − Body ground	Key unlock warning switch ON (Ignition key inserted)	Continuity
1L−8 − Body ground	Passenger's door unlock detection switch OFF	No continuity
1L−8 − Body ground	Passenger's door unlock detection switch ON	Continuity
1L−9 − Body ground	Driver's door unlock detection switch OFF	No continuity
1L−9 − Body ground	Driver's door unlock detection switch ON	Continuity
1L−10 − Body ground	Cargo light switch OFF	No continuity
1L−10 − Body ground	Cargo light switch ON	Continuity
1L−16 − Body ground	Constant	Continuity

If the result is not as specified, there may be a malfunction on the wire harness side.

(b) Reconnect the 1H, 1I, 1K, 1J and 1N driver side J/B connectors, and check the voltage of each terminal of the connectors.

Tester Connection	Condition	Specified Condition
1H−8 − Body ground	Door lock manual switch LOCK or UNLOCK	0 V → 10 − 14 V → Below 1 V
1H−9 − Body ground	Door lock manual switch LOCK or UNLOCK	0 V → 10 − 14 V → Below 1 V

If the result is not as specified, the integration relay (driver side J/B) may malfunction.

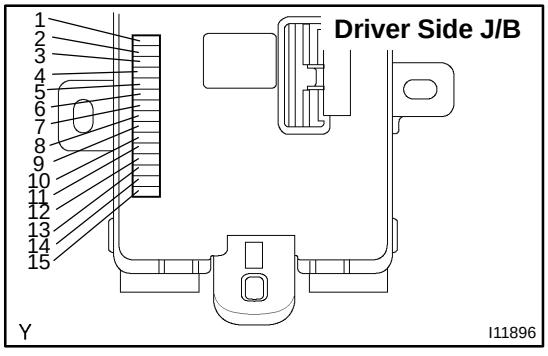

(c) Remove the integration relay from the driver side J/B, and check the voltage or continuity of each terminal on the driver side J/B side (see step 6. (c)).

POWER DOOR LOCK CONTROL SYSTEM (Except Double Cab)

BE2LK–01

LOCATION

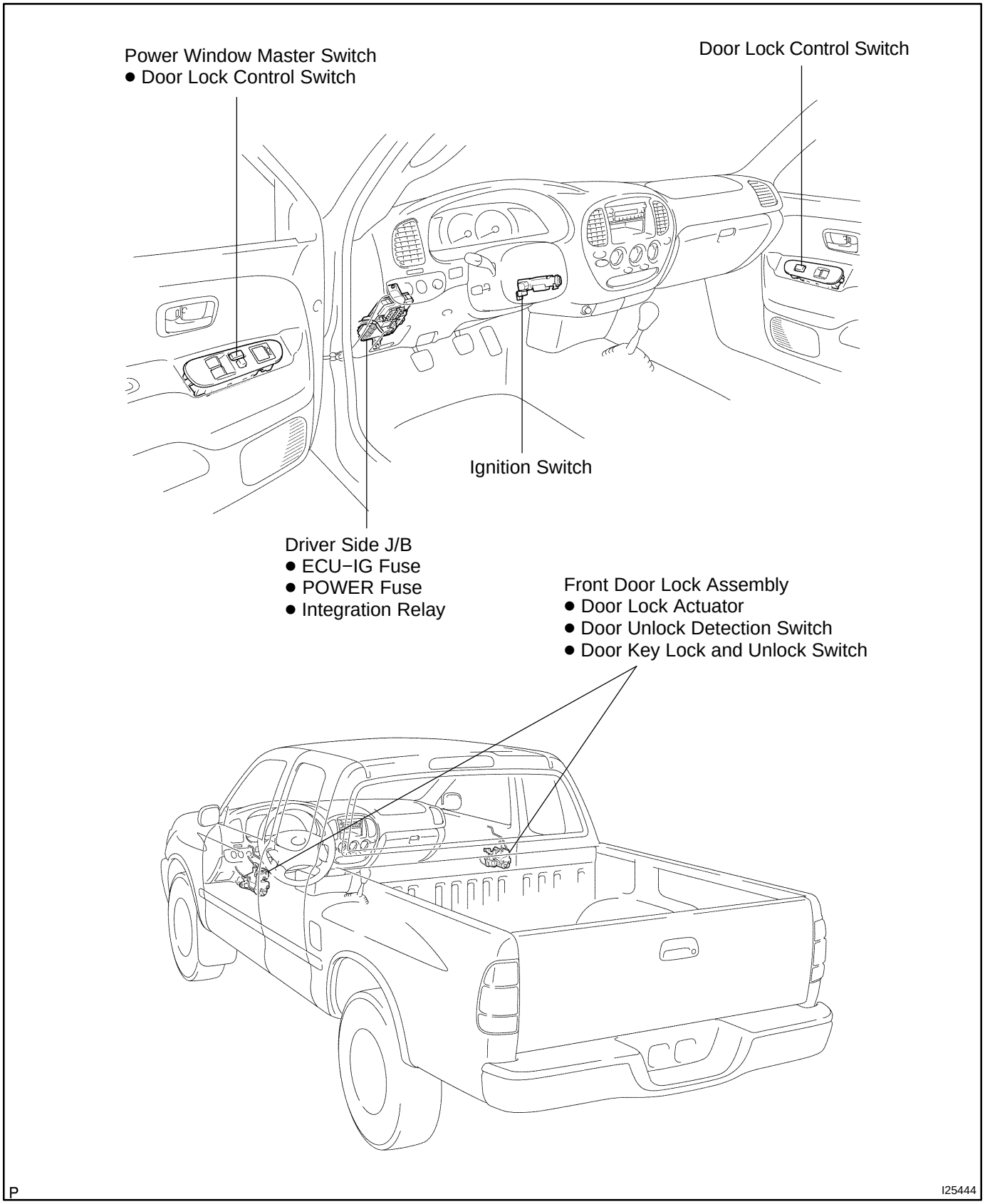

BE2KO−01

INSPECTION

1. Left side:

INSPECT MIRROR SWITCH CONTINUITY

Switch Position	Tester Connection	Specified Condition
UP	4 − 8, 6 − 7	Continuity
DOWN	4 − 7, 6 − 8	Continuity
LEFT	5 − 8, 6 − 7	Continuity
RIGHT	5 − 7, 6 − 8	Continuity

If the continuity is not as specified, replace the switch.

2. Right side:

INSPECT MIRROR SWITCH CONTINUITY

Switch Position	Tester Connection	Specified Condition
UP	3 − 8, 6 − 7	Continuity
DOWN	3 − 7, 6 − 8	Continuity
LEFT	5 − 8, 6 − 7	Continuity
RIGHT	5 − 7, 6 − 8	Continuity

If the continuity is not as specified, replace the switch.

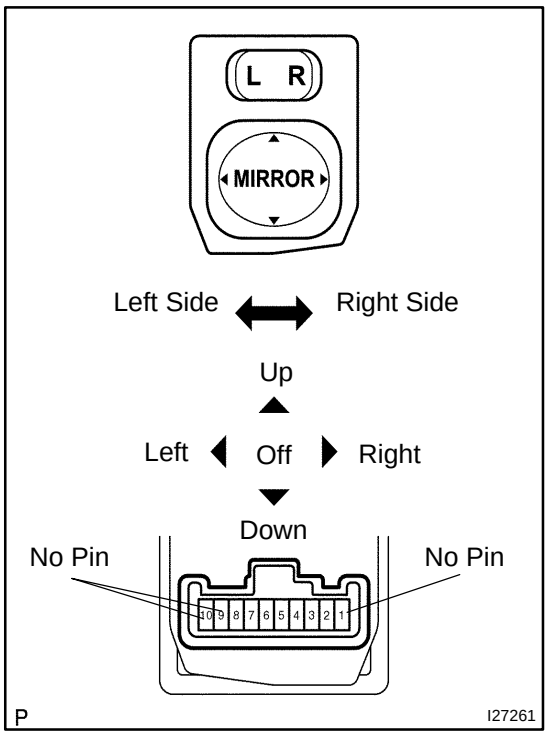

3. INSPECT ACC CUT RELAY CONTINUITY

Tester Connection	Specified Condition
3 − 5	No continuity
3 − 5	Continuity (When battery voltage is applied to terminals 1 and 2)

If the continuity is not as specified, replace the relay.

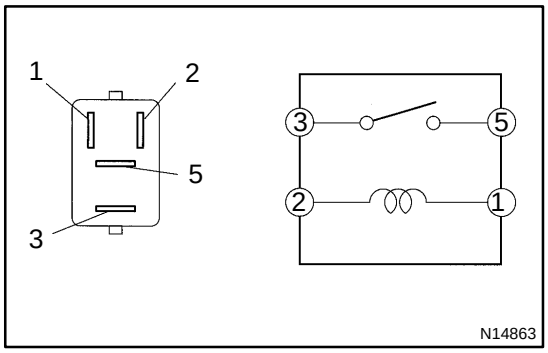

4. INSPECT MIRROR MOTOR OPERATION

(a) Connect the positive (+) lead from the battery to terminal 3 and negative (−) lead to terminal 1. Check that the mirror turns leftward.

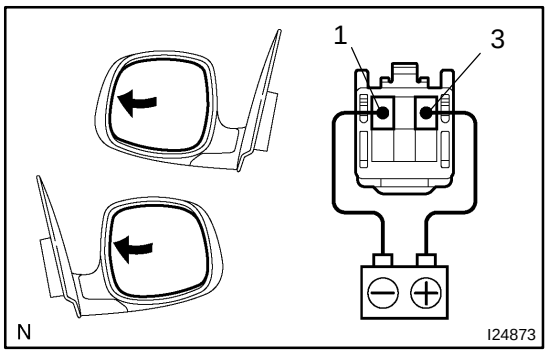

(b) Reverse the polarity, check that the mirror turns rightward.

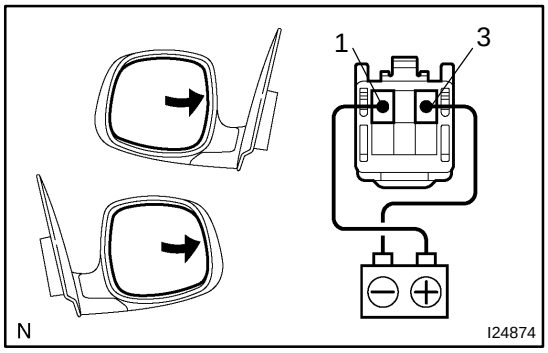

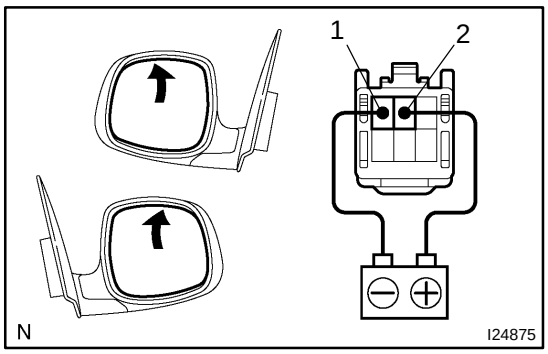

(c) Connect the positive (+) lead from the battery to terminal 2 and the negative (−) lead to terminal 1. Check that the mirror turns upward.

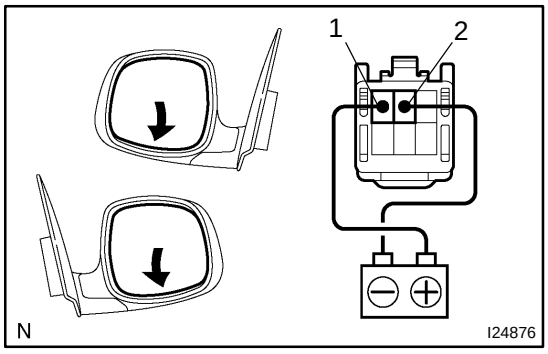

(d) Reverse the polarity, check that the mirror turns downward.

If operation is not as specified, replace the mirror assembly.

POWER MIRROR CONTROL SYSTEM (Double Cab)

BE2KN−01

LOCATION

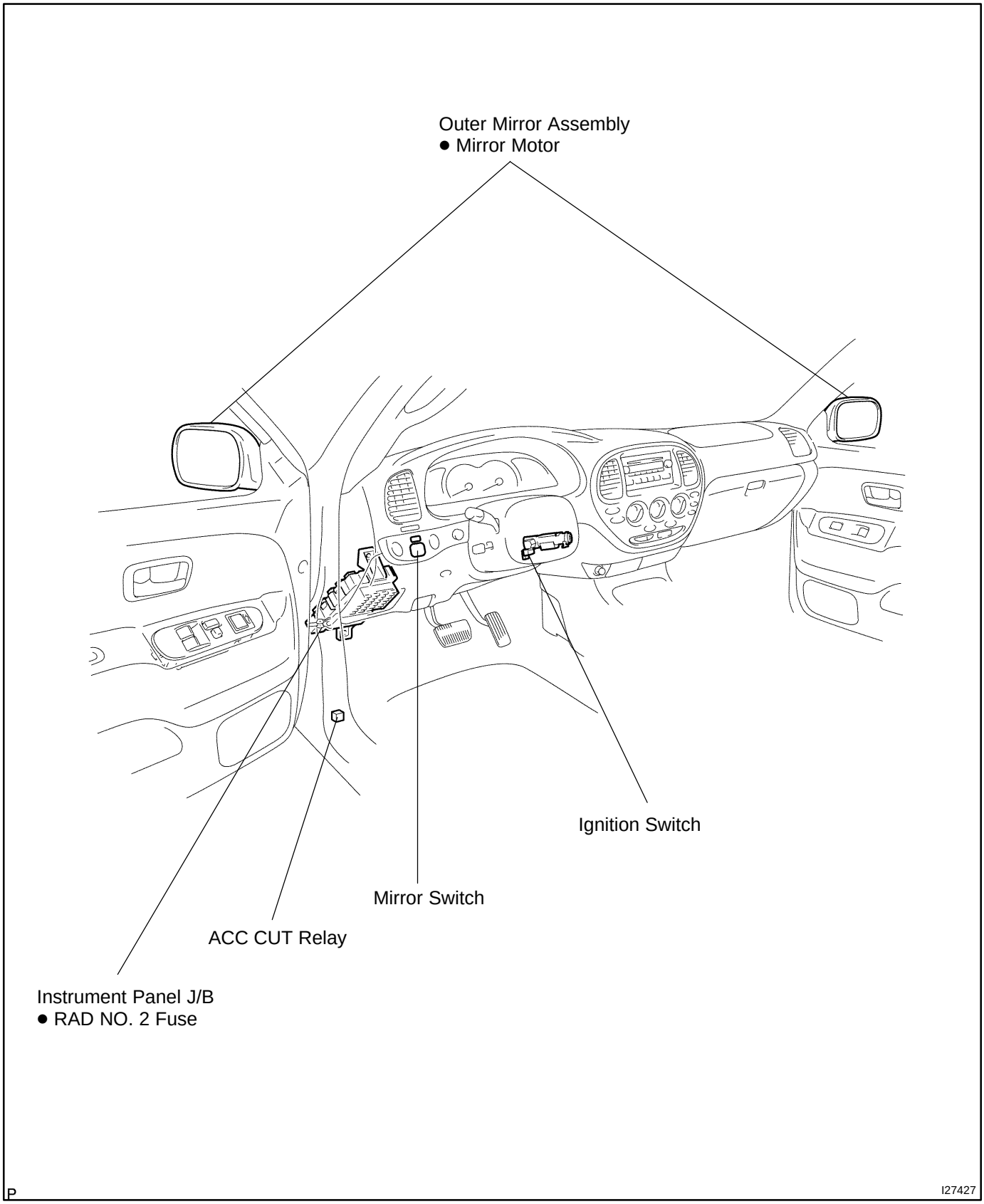

BE2KM−01

INSPECTION

1. Left side:

INSPECT MIRROR SWITCH CONTINUITY

Switch Position	Tester Connection	Specified Condition
UP	4 − 8, 6 −7	Continuity
DOWN	4 − 7, 6 − 8	Continuity
LEFT	5 − 8, 6 − 7	Continuity
RIGHT	5 − 7, 6 − 8	Continuity

If the continuity is not as specified, replace the switch.

2. Right side:

INSPECT MIRROR SWITCH CONTINUITY

Switch Position	Tester Connection	Specified Condition
UP	3 − 8, 6 − 7	Continuity
DOWN	3 − 7, 6 − 8	Continuity
LEFT	5 − 8, 6 − 7	Continuity
RIGHT	5 − 7, 6 − 8	Continuity

If the continuity is not as specified, replace the switch.

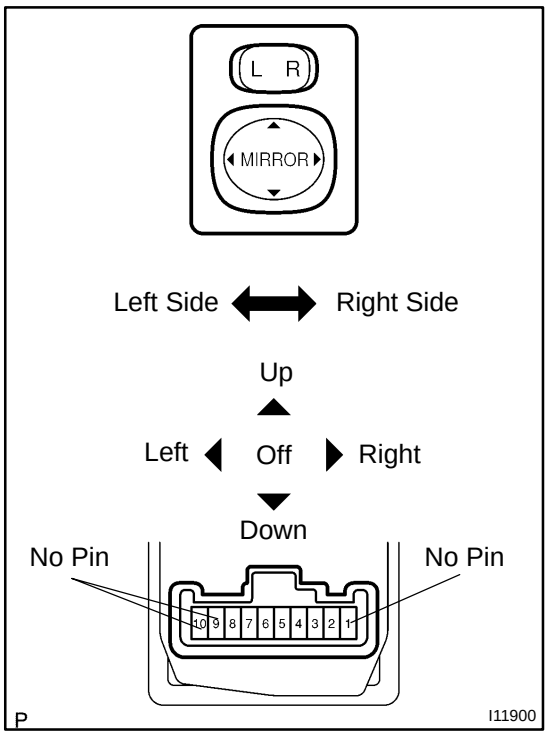

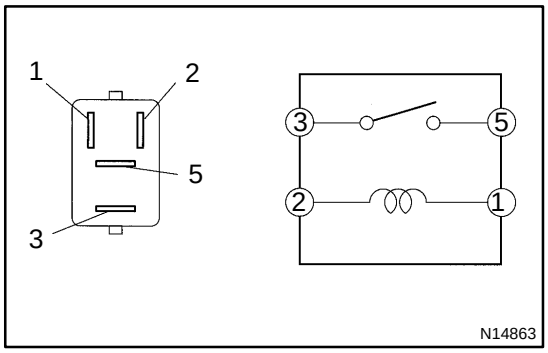

3. 2UZ−FE:

INSPECT ACC CUT RELAY CONTINUITY

Tester Connection	Specified Condition
3 − 5	No continuity
3 − 5	Continuity (When battery voltage is applied to terminals 1 and 2)

If the continuity is not as specified, replace the relay.

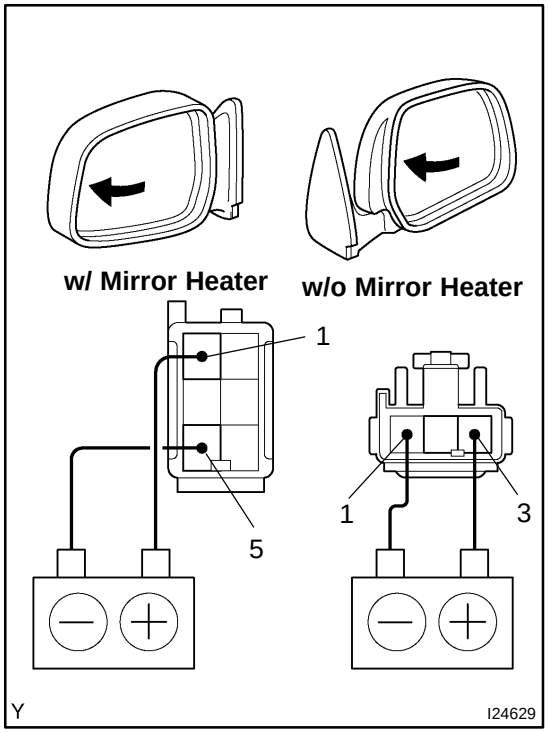

4. INSPECT MIRROR MOTOR OPERATION

(a) Connect the positive (+) lead from the battery to terminal 1 (3) and the negative (−) lead to terminal 5 (1). Check that the mirror turns to the left.

( ): w/o Mirror heater.

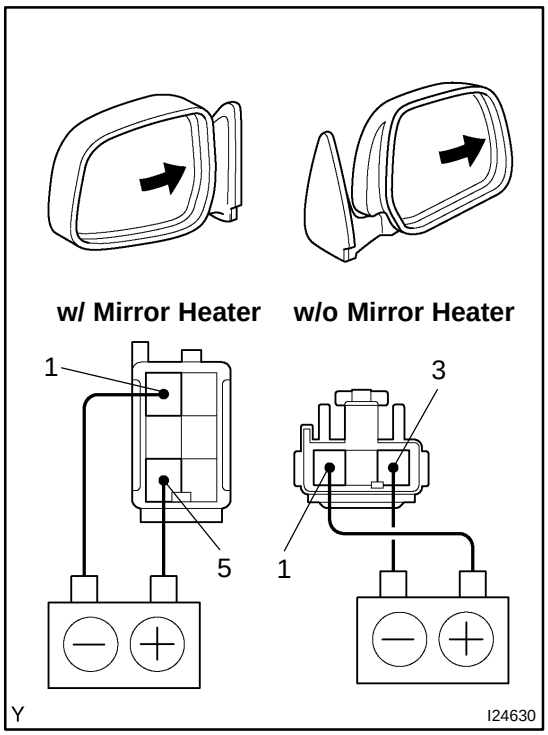

(b) Reverse the polarity, check that the mirror turns to the right.

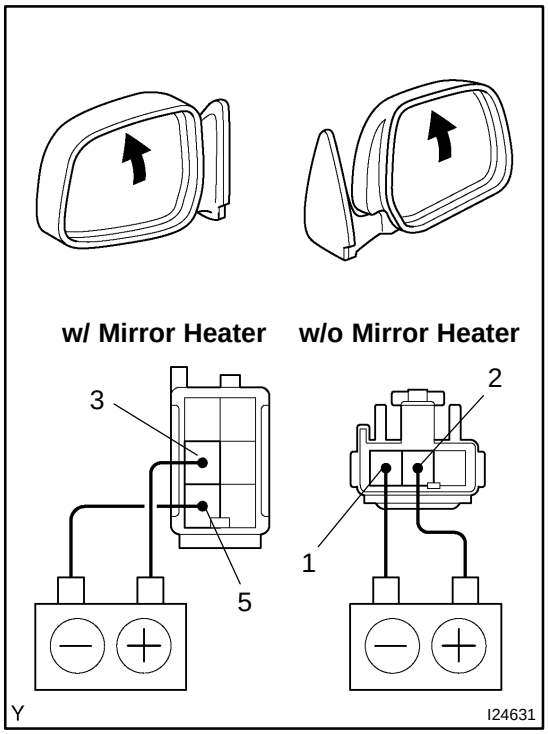

(c) Connect the positive (+) lead from the battery to terminal 3 (2) and the negative (−) lead to terminal 5 (1). Check that the mirror turns upward.

( ): w/o Mirror heater.

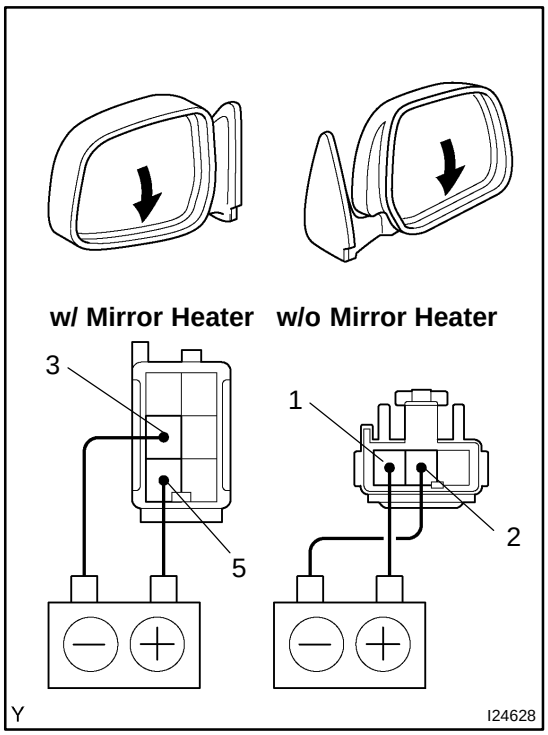

(d) Reverse the polarity, and check that the mirror turns downward.

If operation is not as specified, replace the mirror assembly.

POWER MIRROR CONTROL SYSTEM (Except Double Cab)

BE2KL–01

LOCATION

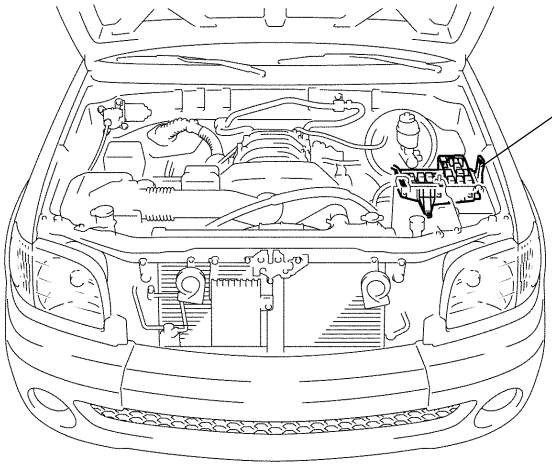

2UZ–FE only:
Engine Room R/B
● ECU–B Fuse

Outer Mirror Assembly
● Mirror Motor

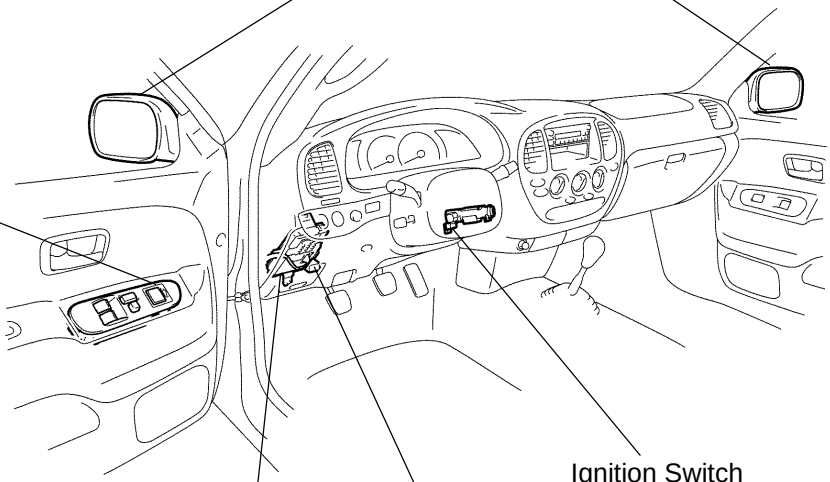

Mirror Switch

Ignition Switch

2UZ–FE only:
ACC Cut Relay

Driver Side J/B
● ACC Fuse

I27069

I27249

BE2K1−01

INSPECTION

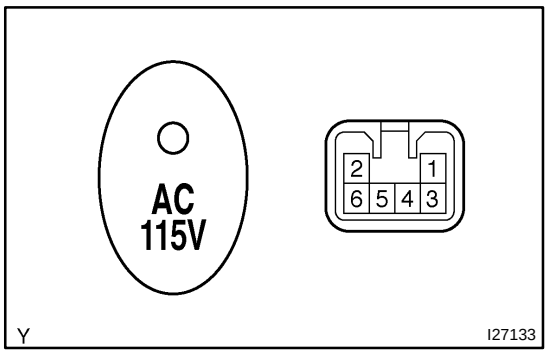

1. Double cab (115 V):
INSPECT MAIN SWITCH CONTINUITY

Switch Position	Tester Connection	Specified Condition
ON	3 − 6	Continuity
OFF	3 − 6	No continuity

If the continuity is not as specified, replace the switch.

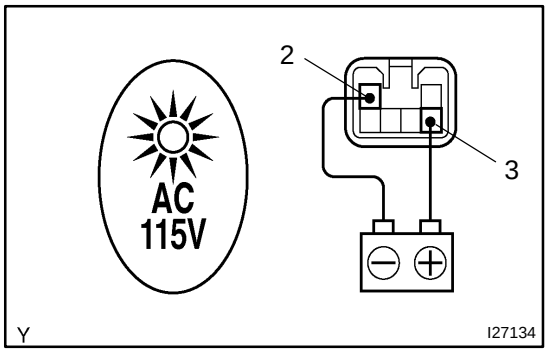

2. Double cab (115 V):
INSPECT MAIN SWITCH INDICATOR LIGHT OPERATION

(a) Connect the positive (+) lead from the battery to terminal 3 and the negative (−) lead to terminal 2.
(b) Push the main switch and check that the indicator light turns on.

If operation is not as specified, replace the switch.

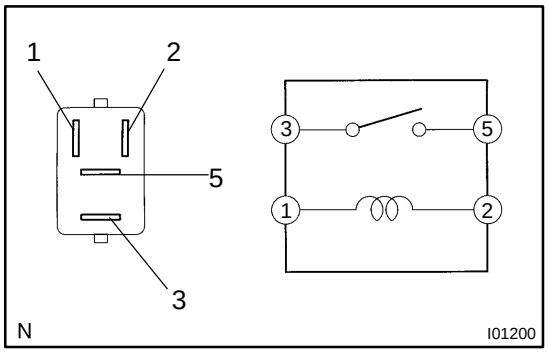

3. Double cab (115 V):
INSPECT INVERTER RELAY CONTINUITY

Tester Connection	Specified Condition
3 − 5	No continuity
3 − 5	Continuity (When battery voltage is applied to terminals 1 and 2)

If the continuity is not as specified, replace the switch.

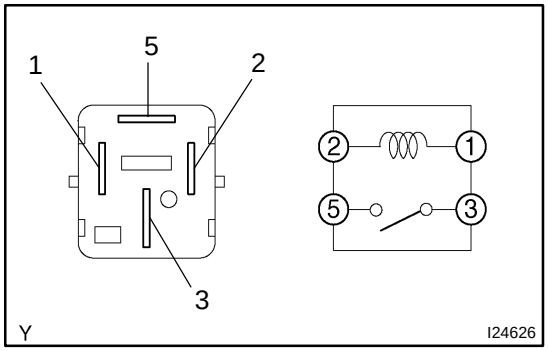

4. Double cab (12 V):
INSPECT ACC RELAY AND ACC CUT RELAY CONTINUITY

Tester Connection	Specified Condition
3 − 5	No continuity
3 − 5	Continuity (When battery voltage is applied to terminals 1 and 2)

If the continuity is not as specified, replace the switch.

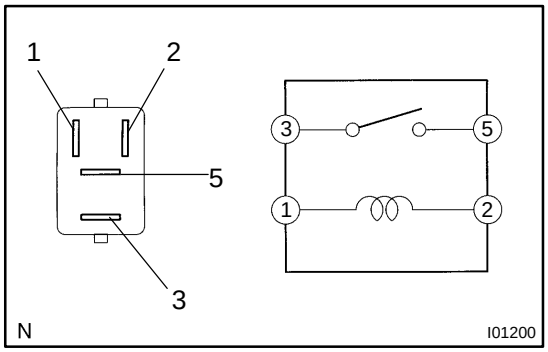

5. Except double cab:
INSPECT POWER OUTLET RELAY (Marking: PWR OUTLET) CONTINUITY

Tester Connection	Specified Condition
3 − 5	No continuity
3 − 5	Continuity (When battery voltage is applied to terminals 1 and 2)

If the continuity is not as specified, replace the switch.

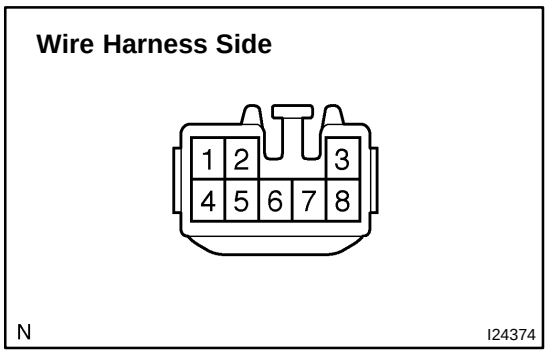

6. Double cab (115 V): INSPECT VOLTAGE INVERTER CIRCUIT

Disconnect the connector from the voltage inverter and check the connector on the wire harness side, as shown in the table.

Main Switch Position	Tester Connection	Specified Condition
ON	1 − 4	10 − 14 V
OFF	1 − 4	No continuity

If the result is not as specified, replace the inverter.

POWER OUTLET

LOCATION

BE2K0−01

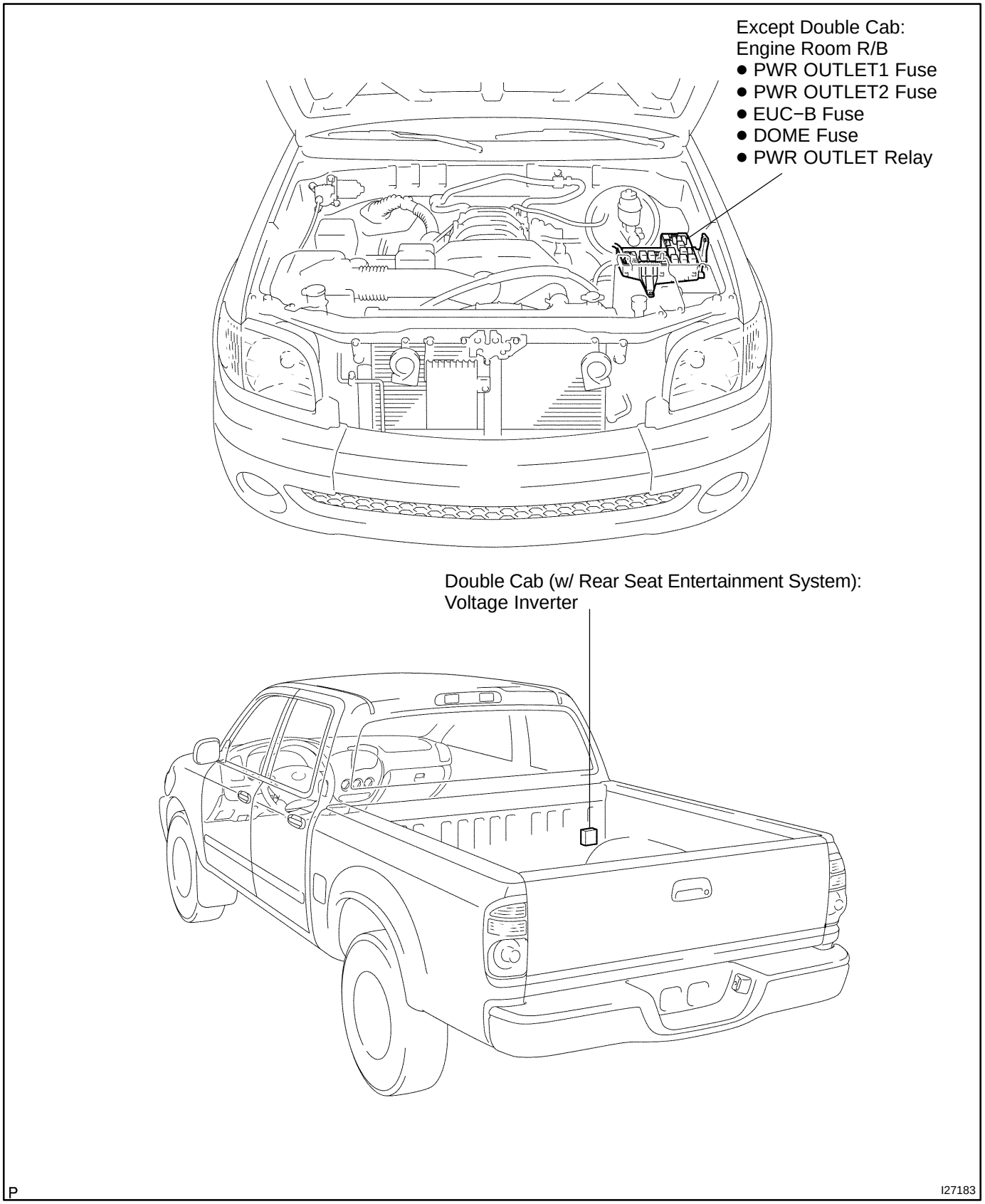

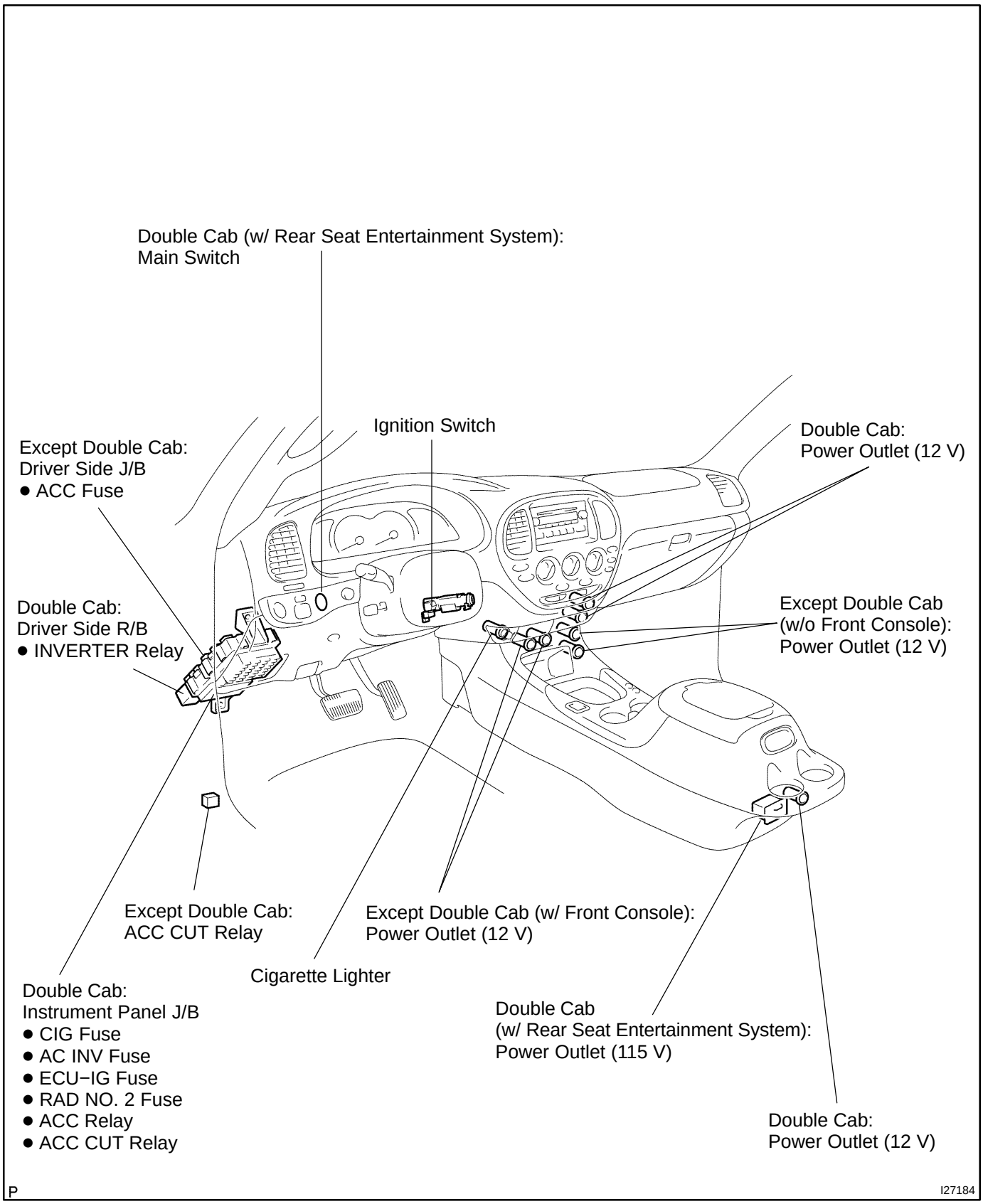
Double Cab (w/ Rear Seat Entertainment System):
Main Switch
Ignition Switch
Except Double Cab:
Driver Side J/B
● ACC Fuse
Double Cab:
Power Outlet (12 V)
Double Cab:
Driver Side R/B
● INVERTER Relay
Except Double Cab
(w/o Front Console):
Power Outlet (12 V)
Except Double Cab:
ACC CUT Relay
Except Double Cab (w/ Front Console):
Power Outlet (12 V)
Cigarette Lighter
Double Cab:
Instrument Panel J/B
● CIG Fuse
● AC INV Fuse
● ECU−IG Fuse
● RAD NO. 2 Fuse
● ACC Relay
● ACC CUT Relay
Double Cab
(w/ Rear Seat Entertainment System):
Power Outlet (115 V)
Double Cab:
Power Outlet (12 V)
P
I27184

POWER SOURCE (Double Cab)

BE2JY−01

LOCATION

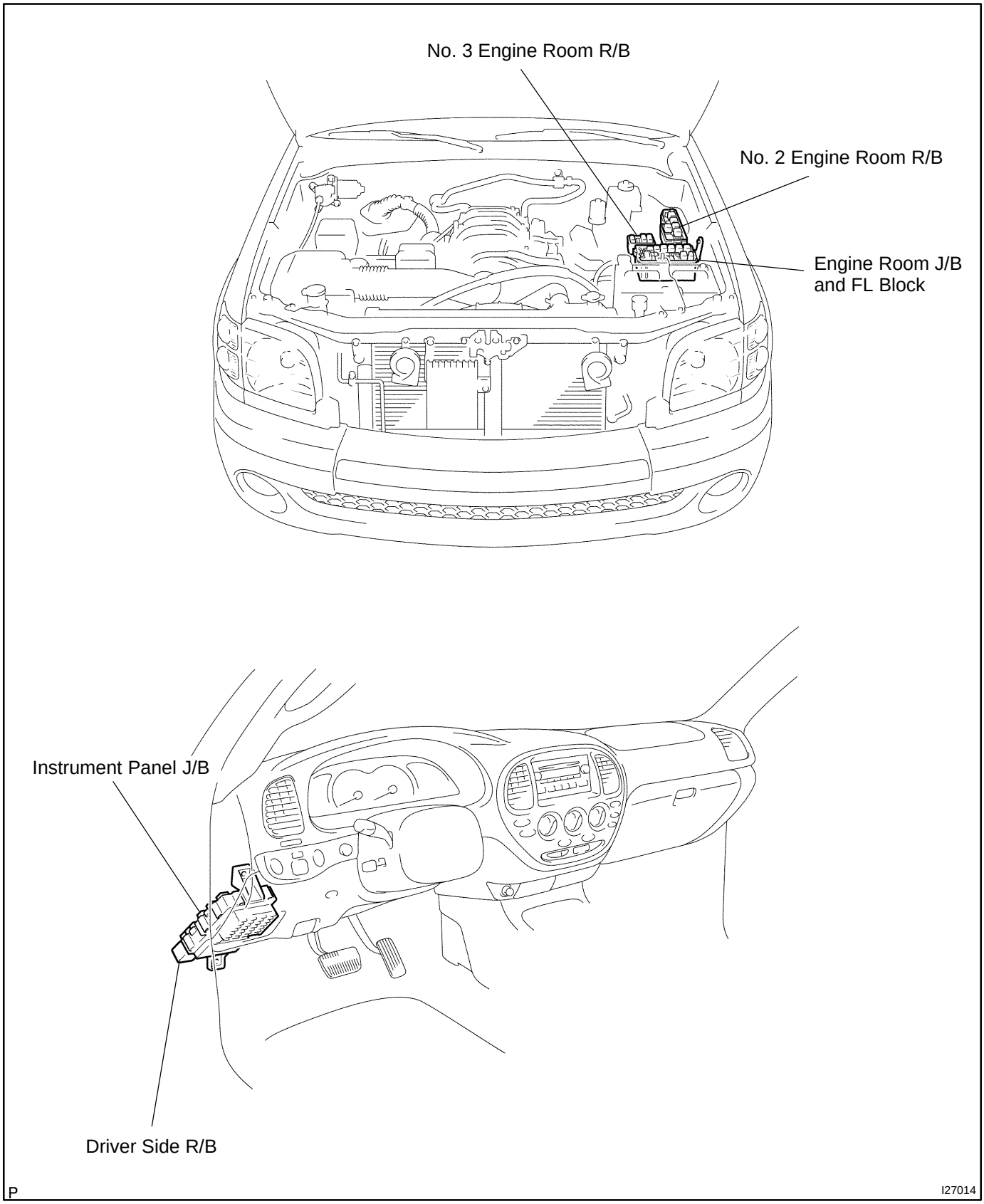

Instrument Panel J/B

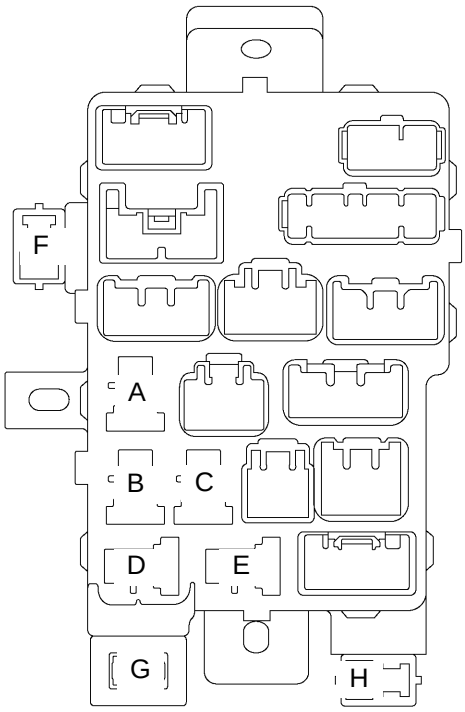

Relays

A: TAILLIGHT Relay
B: BACK−UP Light Relay
C: ACC Relay
D: POWER MAIN Relay
E: FOG LIGHT Relay
F: BACK WINDOW Relay
G: Turn Signal Flasher Relay

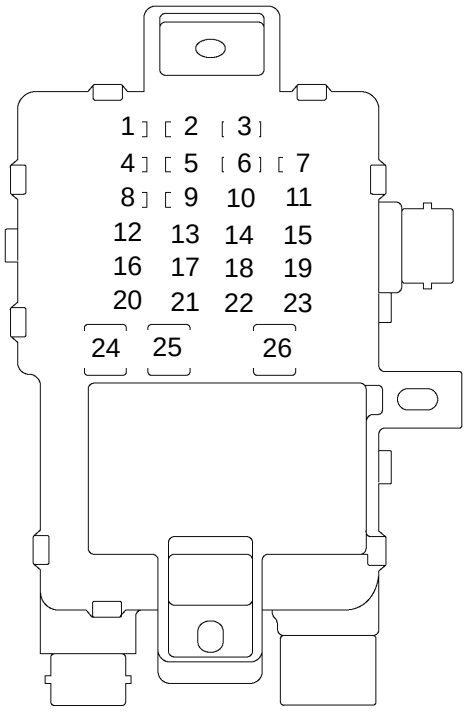

Fuses

1: TAIL Fuse	15 A	14: IGN1 Fuse	10 A
2: PWR NO. 4 Fuse	20 A	15: GAUGE Fuse	15 A
3: PANEL Fuse	7.5 A	16: IGN2 Fuse	20 A
4: ECU−IG Fuse	10 A	17: STOP Fuse	15 A
5: CIG Fuse	15 A	18: SUN ROOF Fuse	25 A
6: PWR NO. 1 Fuse	25 A	19: PWR OUTLET Fuse	15 A
7: HTR Fuse	10 A	20: PWR NO. 3 Fuse	20 A
8: WSH Fuse	25 A	21: OBD Fuse	7.5 A
9: RAD NO. 2 Fuse	7.5 A	22: PWR NO. 2 Fuse	25 A
10: WIP Fuse	25 A	23: SEAT HTR Fuse	15 A
11: FOG Fuse	15 A	24: PWR SEAT M−fuse	30 A
12: AC INV Fuse	15 A	25: AM1 M−fuse	40 A
13: 4WD Fuse	20 A	26: PWR NO. 5 Fuse	30 A

N

I18638

Engine Room J/B and FL Block

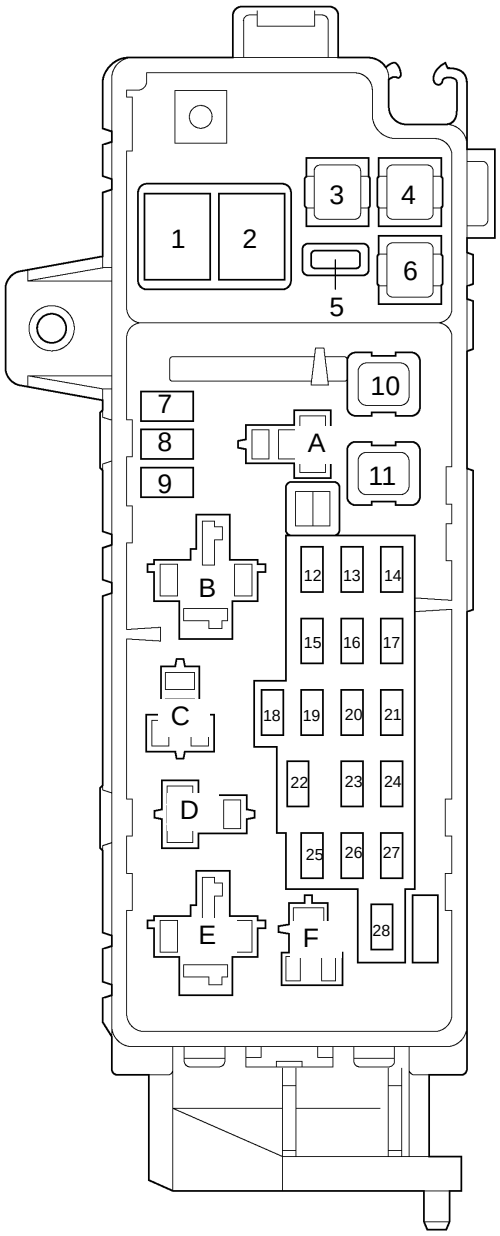

Fuses

1: ABS NO. 2 H−fuse	60 A	15: DRL Fuse*3	15 A
		H−LP LH Fuse*4	15 A
2: ALT H−fuse	140 A		
3: DEFOG M−fuse	40 A	16: ALT−S Fuse	7.5 A
4: ABS NO. 1 M−fuse*1	50 A	17: TOWING Fuse	30 A
ABS NO. 1 M−fuse*2	30 A	18: ST Fuse	30 A
5: CARGO LP Fuse	7.5 A	19: RAD No. 3 Fuse	20 A
6: HEATER M−fuse	50 A	20: TURN−HAZ Fuse	20 A
7: Spare Fuse	15 A	21: AM2 Fuse	25 A
8: Spare Fuse	20 A	22: EFI NO. 2 Fuse	10 A
9: Spare Fuse	30 A	23: SHORT−PIN	
10: MAIN Fuse	40 A	24: HORN Fuse	10 A
11: DOOR NO. 2 M−fuse	30 A	25: MIR HTR Fuse	15 A
12: H−LP RH Fuse*4	15 A	26: ECU−B Fuse	7.5 A
13: EFI NO. 1 Fuse	20 A	27: DOME Fuse	10 A
14: ETCS Fuse	10 A	28: RAD NO. 1 Fuse	25 A

Relays

A: C/OPN Relay

B: HEAD Relay

C: EFI Relay

D: FUEL PUMP Relay

E: DEFOG Relay

F: HORN Relay

*1: w/ VSC
*2: w/o VSC
*3: w/ Daytime Running Light
*4: w/o Daytime Running Light

N

I17086

No. 2 Engine Room R/B

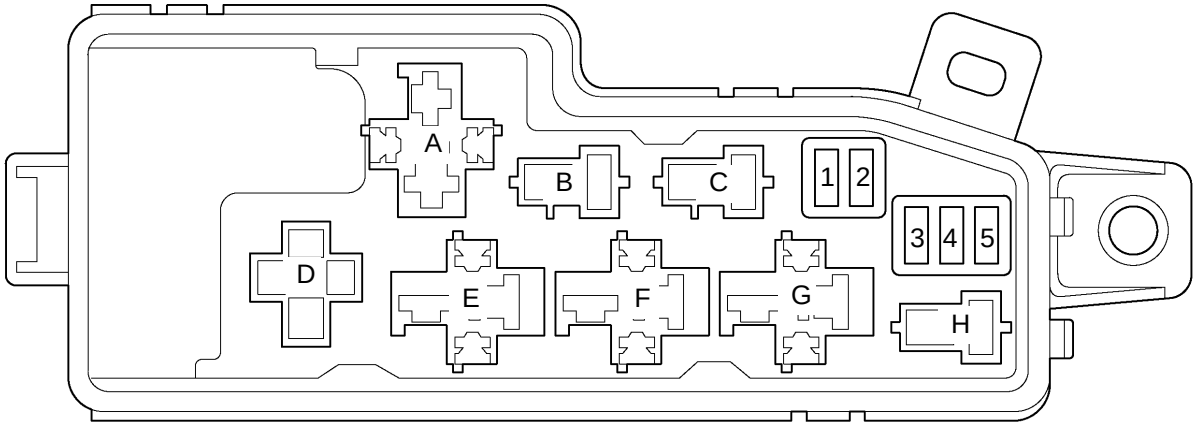

Fuses

1: H−LP LL Fuse*	10 A
2: H−LP RL*	10 A
3: A/C Fuse	7.5 A
4: H−LP LH Fuse*	10 A
5: H−LP RH Fuse*	10 A

Relays

A: −
B: MIR HTR Relay
C: ABS SOL Relay
D: −
E: DRL NO. 4 Relay*
F: HEATER Relay
G: DIMMER Relay
H: ST Relay

*: w/ Daytime Running Light

N

I17087

No. 3 Engine Room R/B

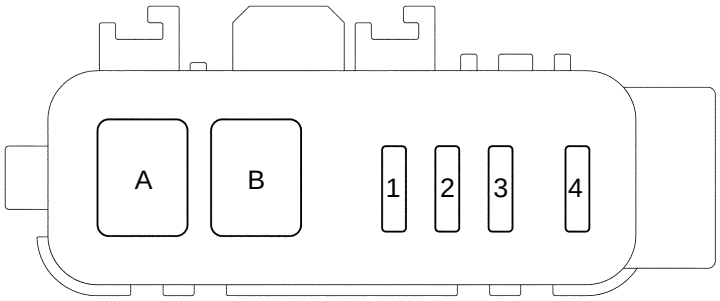

Fuses

1: TOWING BRK Fuse	30 A
2: BATT CHARGE Fuse	30 A
3: TOWING TAIL Fuse	30 A
4: RSE Fuse	7.5 A

Relays

A: BATT CHARGE Relay

B: TOWING TAIL Relay

Driver Side R/B

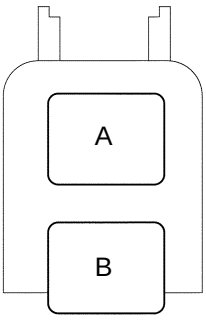

Relays

A: INVERTER Relay

B: SEAT HEATER Relay

P

I24372

POWER SOURCE (Except Double Cab)

BE2JZ−02

LOCATION

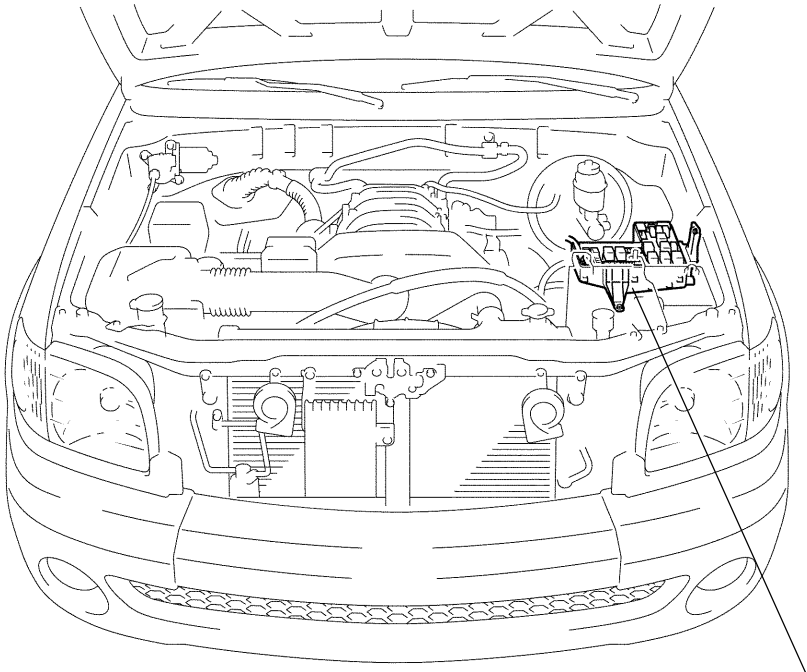

Engine Room R/B

Driver Side J/B
- Integration Relay

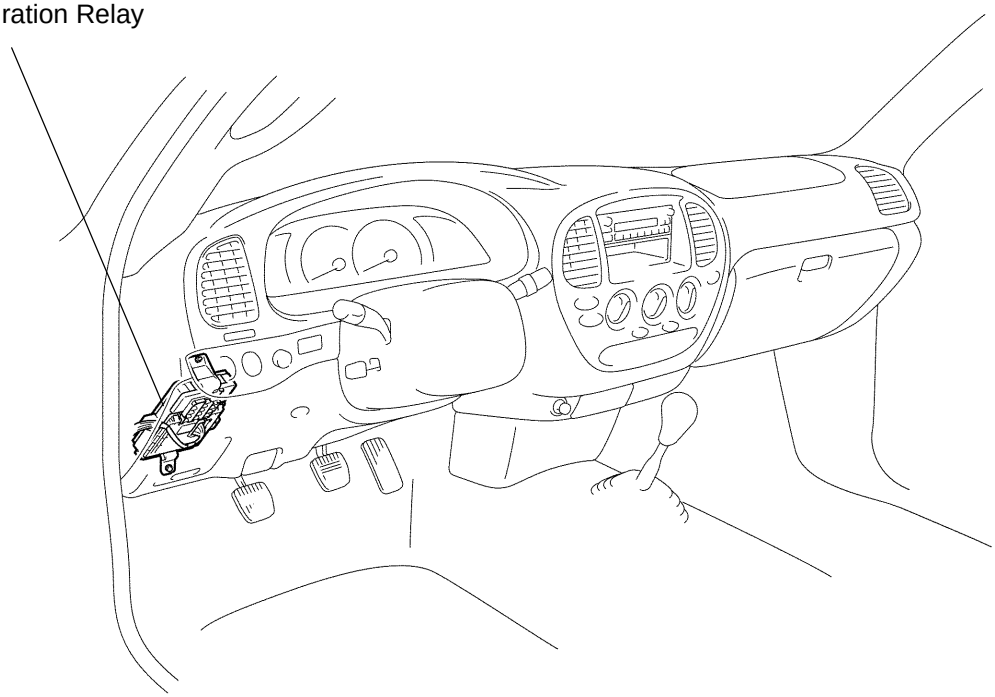

P

I24701

Engine Room R/B

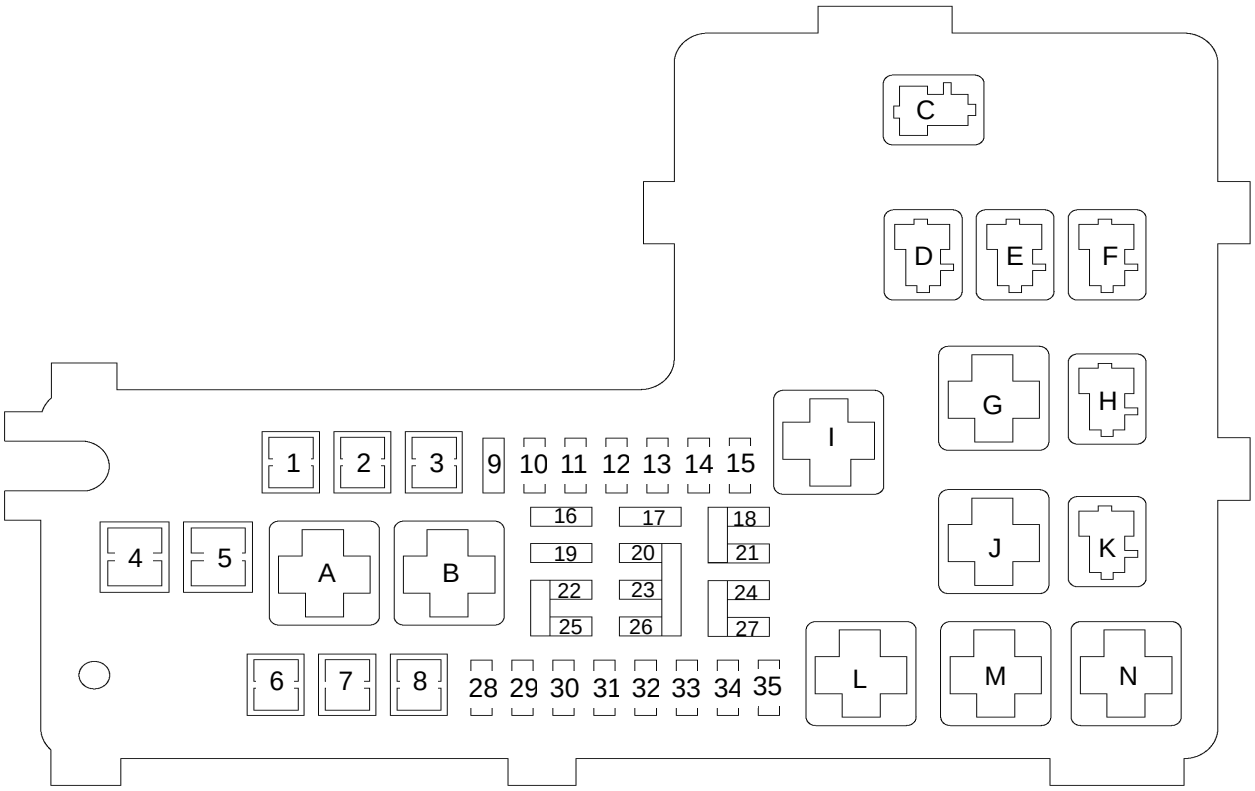

Fuses

1: ABS2 M−fuse	50 A
2: ABS3 M−fuse	50 A
3: ST3 M−fuse	30 A
4: ALT H−fuse*1	140 A
ALT H−fuse*2	100 A
5: −	
6: AM1 M−fuse	40 A
7: HTR M−fuse	50 A
8: J/B M−fuse	50 A
9: ALT−S Fuse	7.5 A
10: ETCS Fuse	15 A
11: HAZ Fuse	15 A
12: EFI NO. 1 Fuse	20 A
13: AM2 Fuse	30 A
14: TOWING Fuse	30 A
15: SHORT PIN	−
16: A/C Fuse	10 A
17: −	
18: HEAD LL Fuse	10 A
19: EFI NO. 2 Fuse	10 A
20: RADIO Fuse	20 A
21: HEAD RL Fuse	10 A
22: PWR OUTLET2 Fuse	15 A
23: DOME Fuse	10 A
24: H−LP LH Fuse	10 A
25: PWR OUTLET1 Fuse	15 A
26: ECU−B Fuse	5 A
27: H−LP RH Fuse	10 A
28: MIR HTR Fuse	15 A
29: FOG Fuse	15 A
30: TOW BRK Fuse	30 A
31: SUB BATT Fuse	30 A
32: TOW TAIL Fuse	30 A
33: −	
34: −	
35: −	

Relays

A: DRL NO. 4 Relay
B: DIMMER Relay
C: ST Relay
D: F/PMP Relay
E: C/OPN Relay
F: EFI Relay
G: TOW TAIL Relay
H: ABS SOL Relay
I: H−LP Relay
J: SUB BATT Relay
K: MIR HTR Relay
L: POWER OUTLET Relay
M: FOG Relay
N: HEATER Relay

*1: Towing Package
*2: Except Towing Package

Y

I24632

Driver Side J/B

w/ Daytime Running Light

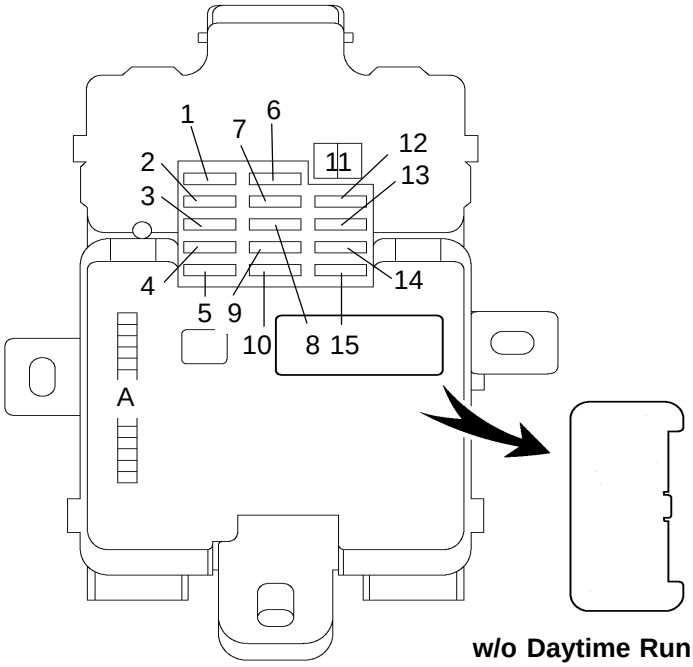

w/o Daytime Running Light

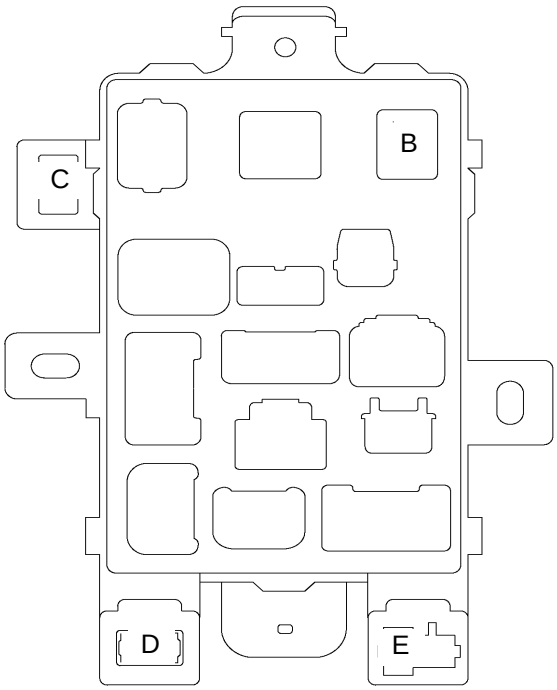

Fuses

1: −	
2: WIP Fuse	20 A
3: TURN Fuse	5 A
4: ECU−IG Fuse	5 A
5: 4WD Fuse	20 A
6: ACC Fuse	15 A
7: GAUGE Fuse	10 A
8: IGN Fuse	5 A
9: CARGO LP Fuse	5 A
10: TAIL Fuse	15 A
11: POWER M−fuse*1	30 A
12: OBD Fuse	7.5 A
13: HORN Fuse	10 A
14: STA Fuse	5 A
15: STOP Fuse	15 A

Relays

A: Integration Relay
B: POWER Relay
C: ACC CUT Relay
D: Turn Signal Flasher
E: BACK−UP LIGHT Relay*2

*1: Towing Package
*2: A/T

Y

I24640

BE2LJ−01

INSPECTION

1. INSPECT POWER SLIDE BACK WINDOW SWITCH CONTINUITY

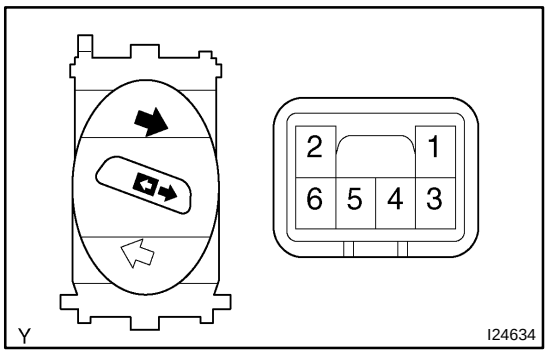

Switch Position	Tester Connection	Specified Condition
OPEN	1 − 3, 2 − 6	Continuity
OFF	2 − 3, 2 − 6	Continuity
CLOSE	1 − 6, 2 − 3	Continuity

If the continuity is not as specified, replace the switch.

2. CHECK POWER SLIDE BACK WINDOW MOTOR PTC THERMISTOR OPERATION

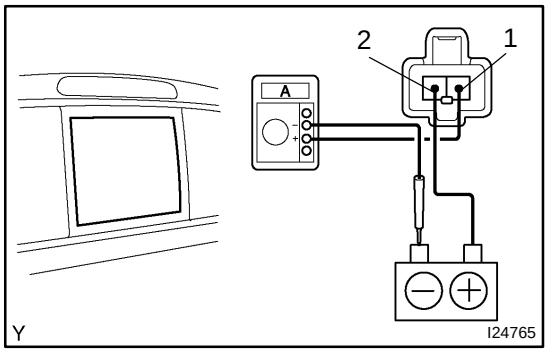

(a) Disconnect the connector from the window motor.
(b) Connect the positive (+) lead from the ammeter to terminal 1 of the motor connector and the negative (−) lead to the negative terminal of the battery.
(c) Connect the positive (+) lead from the battery to terminal 2 of the motor connector, and slide the window to the fully closed position.

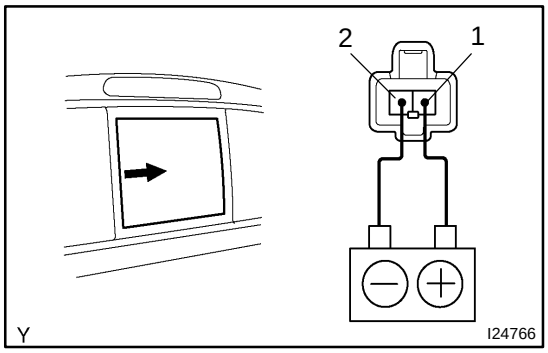

(d) Continue to apply voltage and check that the current changes to less than 1 A in 4 to 90 seconds.
(e) Disconnect the leads from the terminals.
(f) Approximately 60 seconds later, connect the positive (+) lead from the battery to terminal 1 and the negative (−) lead to terminal 2, and check that the window begins to slide open.

If operation is not as specified, replace the regulator and motor assembly.

3. INSPECT POWER RELAY CONTINUITY

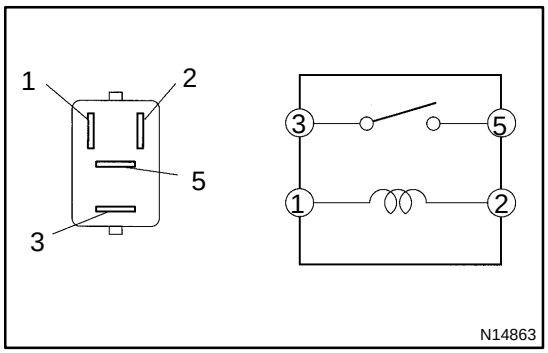

Tester Connection	Specified Condition
3 − 5	No continuity
3 − 5	Continuity (When battery voltage is applied to terminals 1 and 2)

If the continuity is not as specified, replace the relay.

4. CHECK INTEGRATION RELAY

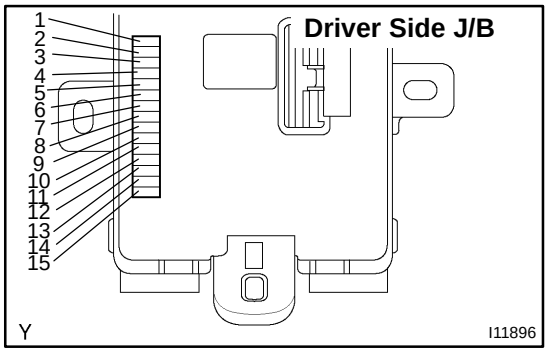

Remove the integration relay from the driver side J/B, and check the voltage or continuity of each terminal on the driver side J/B side (see page BE−128).

POWER SLIDE BACK WINDOW SYSTEM (Except Double Cab)

BE2LI–01

LOCATION

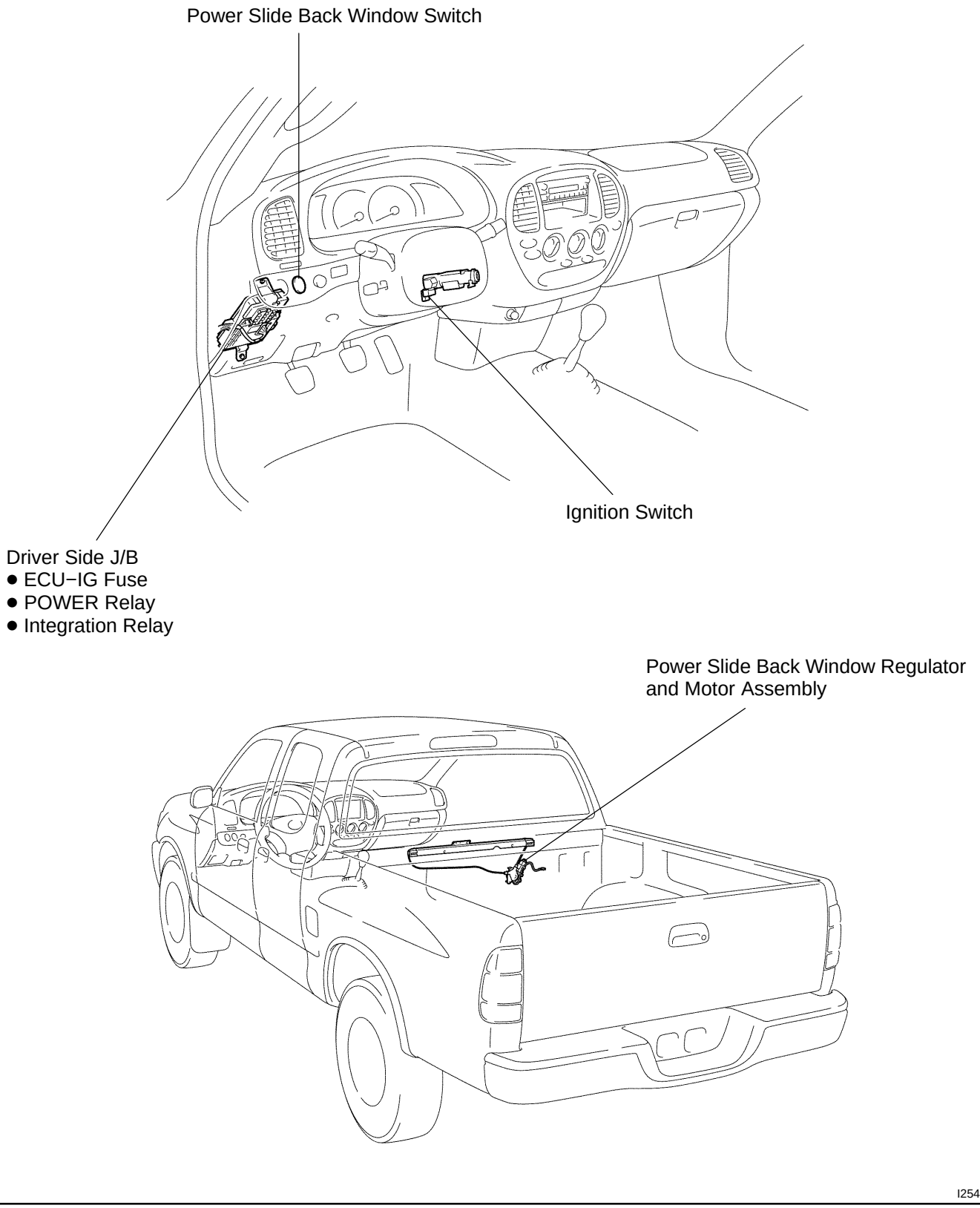

BE2KP−01

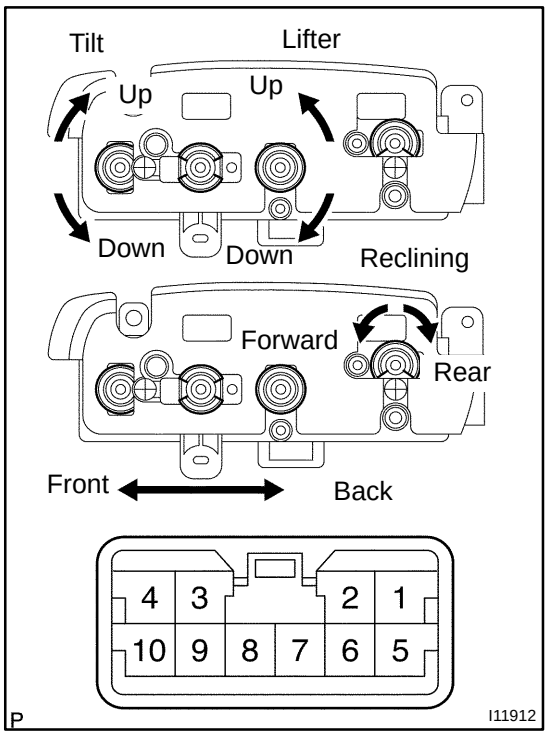

INSPECTION

1. INSPECT POWER SEAT SWITCH CONTINUITY

Slide switch:

Switch Position	Tester Connection	Specified Condition
FRONT	1 − 9, 4 − 6	Continuity
OFF	4 − 6 − 9	Continuity
BACK	1 − 6, 4 − 9	Continuity

Front tilt switch:

Switch Position	Tester Connection	Specified Condition
UP	1 − 10, 4 − 5	Continuity
OFF	4 − 5 − 10	Continuity
DOWN	1 − 5, 4 − 10	Continuity

Rear lifter switch:

Switch Position	Tester Connection	Specified Condition
UP	1 − 7, 4 − 8	Continuity
OFF	4 − 7 − 8	Continuity
DOWN	1 − 8, 4 − 7	Continuity

Reclining switch:

Switch Position	Tester Connection	Specified Condition
FORWARD	1 − 3, 2 − 4	Continuity
OFF	2 − 3 − 4	Continuity
REAR	1 − 2, 3 − 4	Continuity

If the continuity is not as specified, replace the switch.

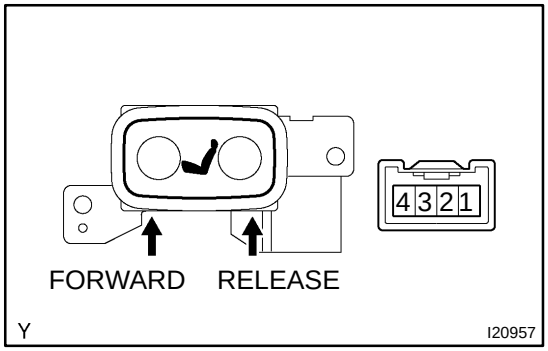

2. INSPECT LUMBAR SUPPORT SWITCH CONTINUITY

Switch Position	Tester Connection	Specified Condition
FORWARD	1 − 4, 2 − 3	Continuity
OFF	1 − 2 − 3	Continuity
RELEASE	1 − 3, 2 − 4	Continuity

If the continuity is not as specified, replace the switch.

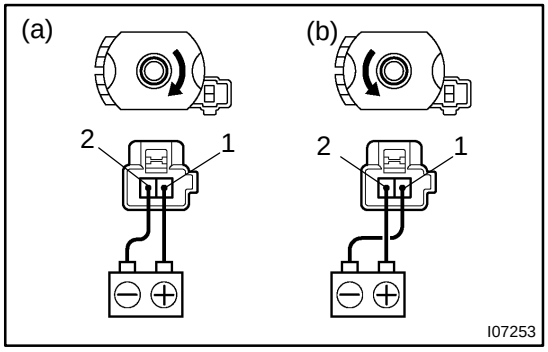

3. INSPECT SLIDE MOTOR OPERATION

(a) Connect the positive (+) lead from the battery to terminal 1 and the negative (−) lead to terminal 2. Check that the motor turns clockwise.

(b) Reverse the polarity, and check that the motor turns counterclockwise.

If operation is not as specified, replace the seat adjuster.

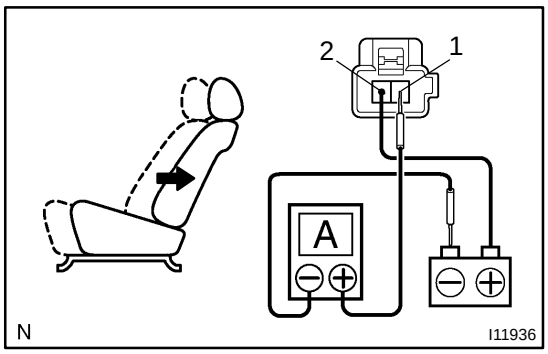

4. INSPECT SLIDE MOTOR PTC THERMISTOR OPERATION

(a) Connect the positive (+) lead from the battery to terminal 2, the positive (+) lead from the ammeter to terminal 1 and the negative (−) lead to the battery negative (−) terminal. Then move the seat cushion to the rear position.

(b) Continue to apply voltage, and check that current changes to less than 1 A within 4 to 90 seconds.

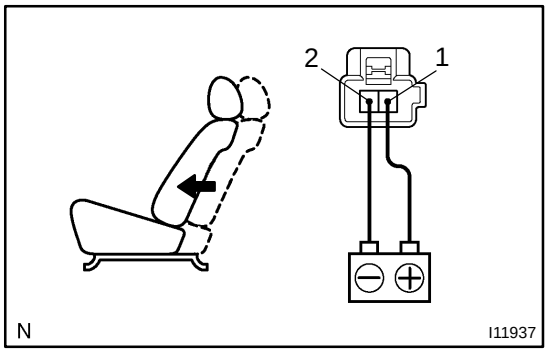

(c) Disconnect the leads from the terminals.

(d) Approximately 60 seconds later, connect the positive (+) lead from the battery to terminal 1 and the negative (−) lead to terminal 2. Check that the seat cushion begins to move forward.

If operation is not as specified, replace the seat adjuster.

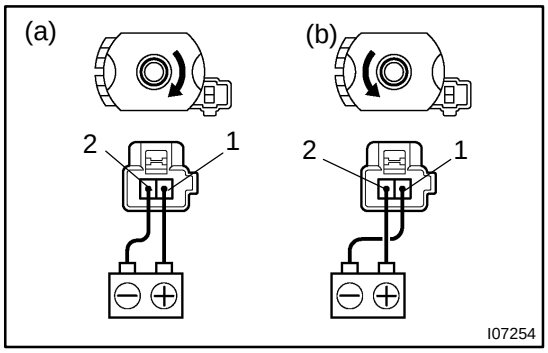

5. INSPECT FRONT TILT MOTOR OPERATION

(a) Connect the positive (+) lead from the battery to terminal 1 and the negative (−) lead to terminal 2. Check that the motor turns clockwise.

(b) Reverse the polarity, and check that the motor turns counterclockwise.

If operation is not as specified, replace the seat adjuster.

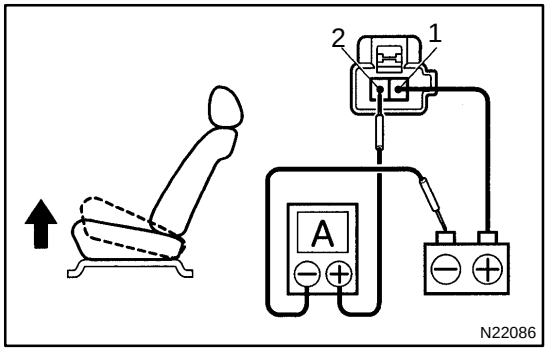

6. INSPECT FRONT TILT MOTOR PTC THERMISTOR OPERATION

(a) Connect the positive (+) lead from the battery to terminal 1, the positive (+) lead from the ammeter to terminal 2 and the negative (−) lead to the battery negative (−) terminal. Then move the seat cushion to the highest position.

(b) Continue to apply voltage, and check that the current changes to less than 1 A within 4 to 90 seconds.

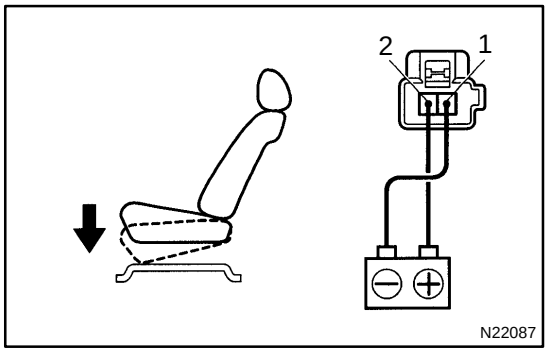

(c) Disconnect the leads from the terminals.

(d) Approximately 60 seconds later, connect the positive (+) lead from the battery to terminal 2 and the negative (−) lead to terminal 1. Check that the seat cushion begins to descend.

If operation is not as specified, replace the seat adjuster.

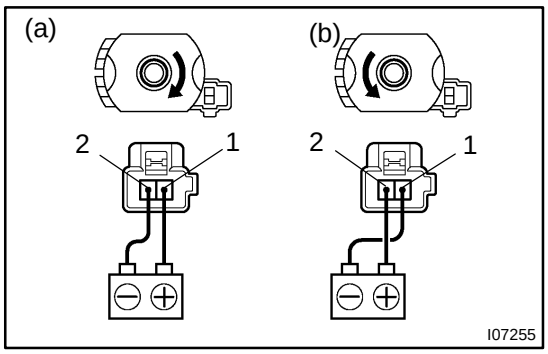

7. INSPECT LIFTER MOTOR OPERATION

(a) Connect the positive (+) lead from the battery to terminal 1 and the negative (−) lead to terminal 2. Check that the motor turns clockwise.

(b) Reverse the polarity, and check that the motor turns counterclockwise.

If operation is not as specified, replace the seat adjuster.

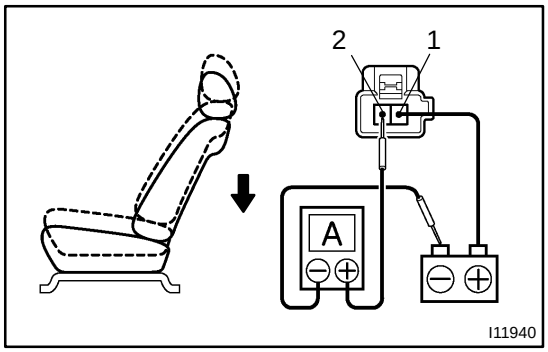

8. INSPECT LIFTER MOTOR PTC THERMISTOR OPERATION

(a) Connect the positive (+) lead from the battery to terminal 1, the positive (+) lead from the ammeter to terminal 2 and the negative (−) lead to the battery negative (−) terminal. Then move the seat cushion to the lowest position.

(b) Continue to apply voltage, and check that the current changes to less than 1 A within 4 to 90 seconds.

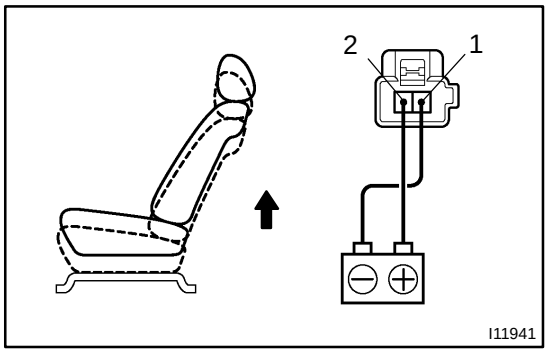

(c) Disconnect the leads from the terminals.

(d) Approximately 60 seconds later, connect the positive (+) lead from the battery to terminal 2 and the negative (−) lead to terminal 1. Check that the seat cushion begins to ascend.

If operation is not as specified, replace the seat adjuster.

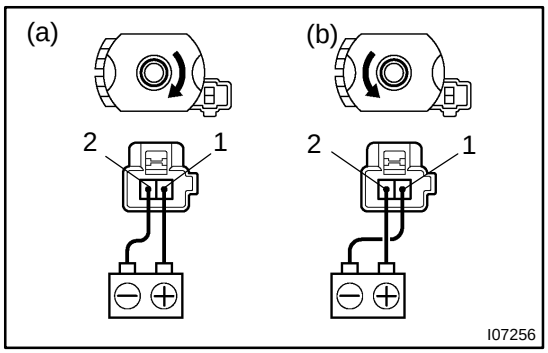

9. INSPECT RECLINING MOTOR OPERATION

(a) Connect the positive (+) lead from the battery to terminal 1 and the negative (−) lead to terminal 2. Check that the motor turns clockwise.

(b) Reverse the polarity, and check that the motor turns counterclockwise.

If operation is not as specified, replace the seat adjuster.

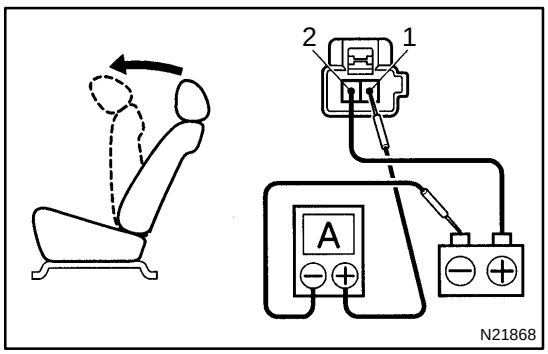

10. INSPECT RECLINING MOTOR PTC THERMISTOR OPERATION

(a) Connect the positive (+) lead from the battery to terminal 2, the positive (+) lead from the ammeter to terminal 1 and the negative (−) lead to the battery negative (−) terminal. Then recline the seatback to the most forward position.

(b) Continue to apply voltage, and check that the current changes to less than 1 A within 4 to 90 seconds.

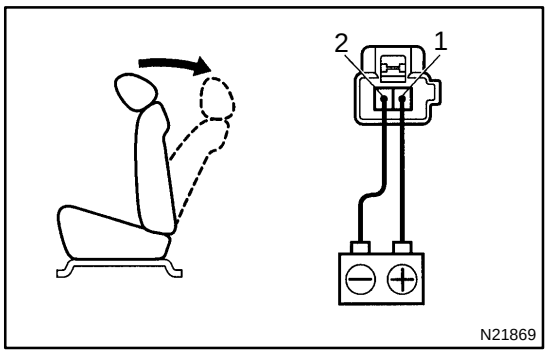

(c) Disconnect the leads from the terminals.
(d) Approximately 60 seconds later, connect the positive (+) lead from the battery to terminal 1 and the negative (−) lead to terminal 2. Check that the seatback begins to fall backward.

If operation is not as specified, replace the seat adjuster.

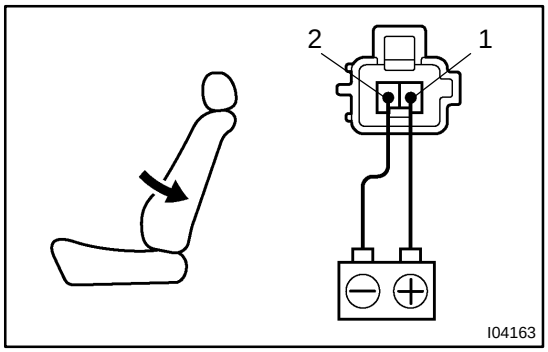

11. INSPECT LUMBAR SUPPORT MOTOR OPERATION

(a) Connect the positive (+) lead from the battery to terminal 1 and the negative (−) lead to terminal 2. Check that the lumbar support moves to the release side.

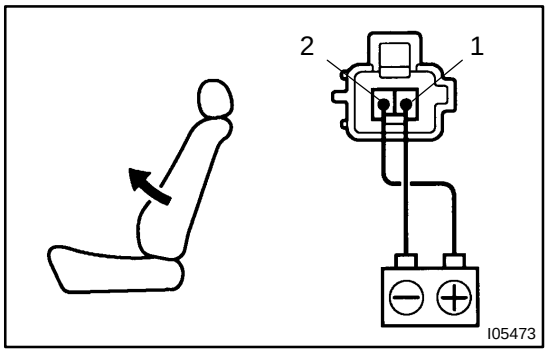

(b) Reverse the polarity, and check that the lumbar support moves forward.

If operation is not as specified, replace the lumbar support adjuster.

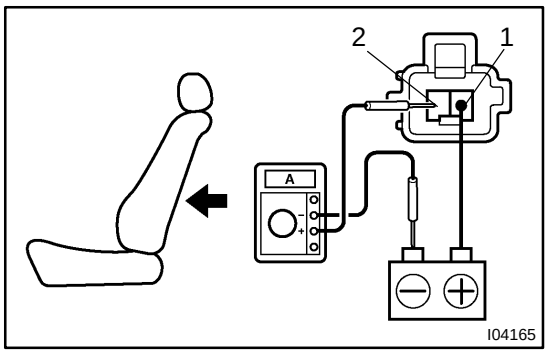

12. INSPECT LUMBAR SUPPORT MOTOR CIRCUIT BREAKER OPERATION

(a) Connect the positive (+) lead from the battery to terminal 2 and the negative (−) lead to terminal 1 on the lumbar support motor connector. Move the lumbar support to the front end position.

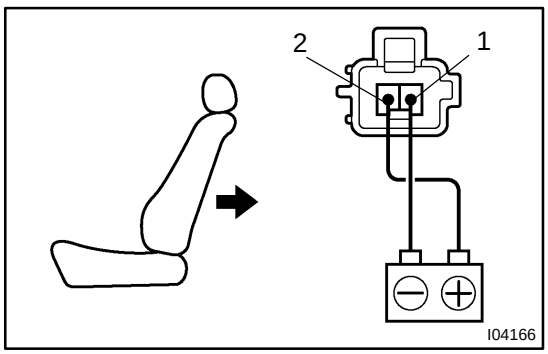

(b) Continue to apply voltage, and check that a circuit breaker operation noise can be heard within 4 to 60 seconds.
(c) Reverse the polarity, and check that the lumbar support begins to move to the release side within approximately 60 seconds.

If operation is not as specified, replace the lumbar support adjuster.

POWER SEAT CONTROL SYSTEM

BE17F−07

LOCATION

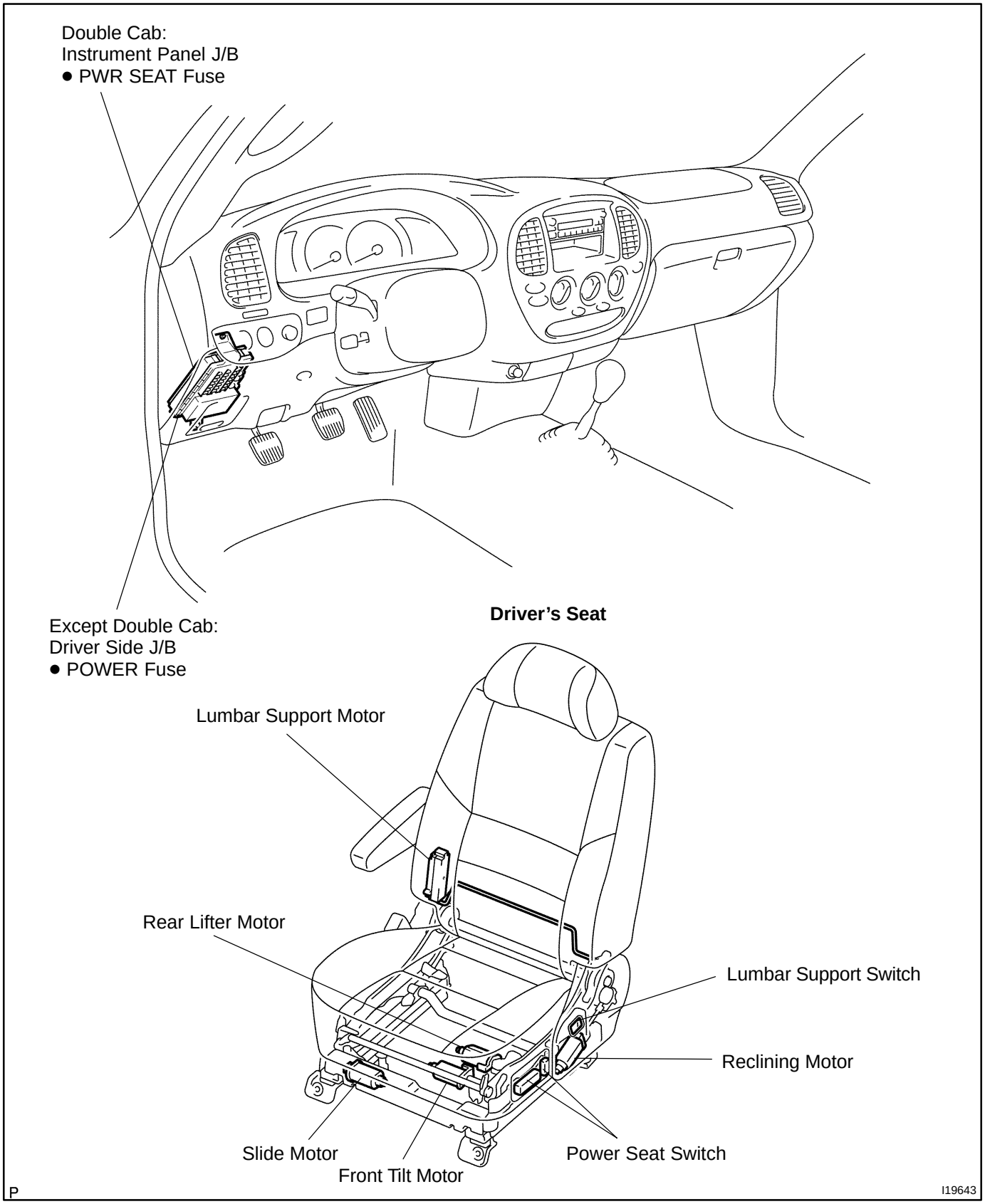

BE2LF−02

INSPECTION

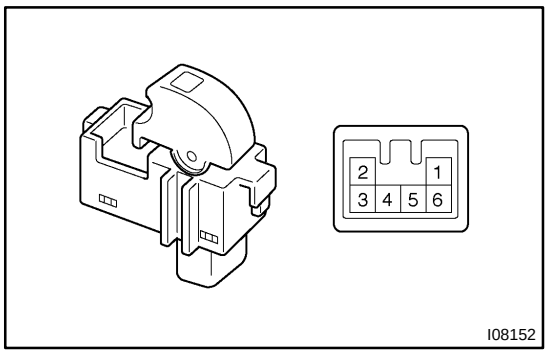

1. INSPECT POWER WINDOW REGULATOR SWITCH CONTINUITY

Switch Position	Tester Connection	Specified Condition
UP	2 − 3, 4 − 5	Continuity
OFF	2 − 3 − 5	Continuity
DOWN	2 − 4, 3 − 5	Continuity

If the continuity is not as specified, replace the switch.

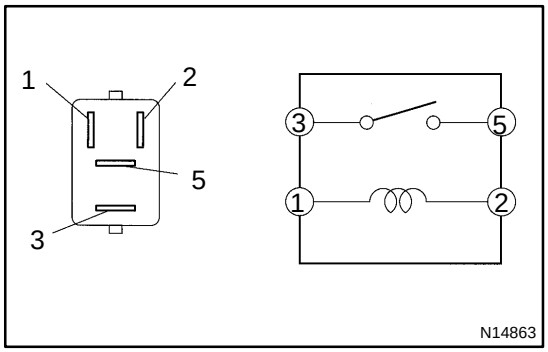

2. INSPECT POWER MAIN RELAY CONTINUITY

Tester Connection	Specified Condition
3 − 5	No continuity
3 − 5	Continuity (When battery voltage is applied to terminals 1 and 2)

If the continuity is not as specified, replace the relay.

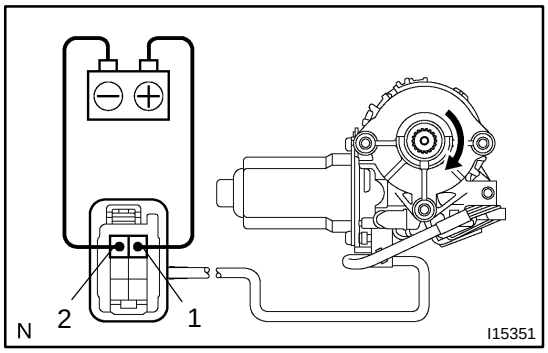

3. Driver side door: INSPECT POWER WINDOW MOTOR OPERATION

(a) Connect the positive (+) lead from the battery to terminal 1 and the negative (−) lead to terminal 2, and check that the motor turns clockwise.

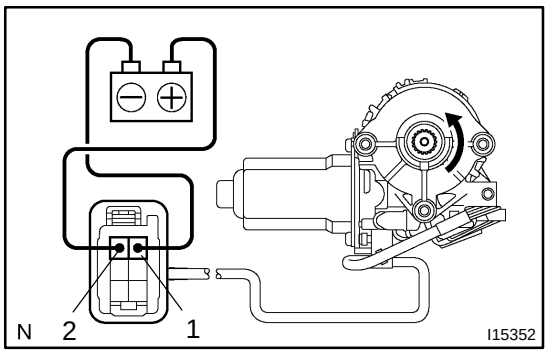

(b) Reverse the polarity and check that the motor turns counterclockwise.

If operation is not as specified, replace the motor.

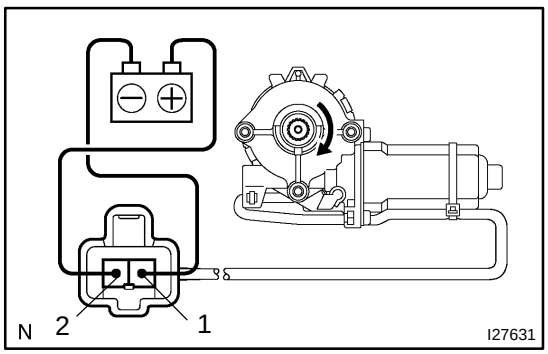

4. Passenger side door: INSPECT POWER WINDOW MOTOR OPERATION

(a) Connect the positive (+) lead from the battery to terminal 2 and the negative (−) lead to terminal 1, and check that the motor turns clockwise.

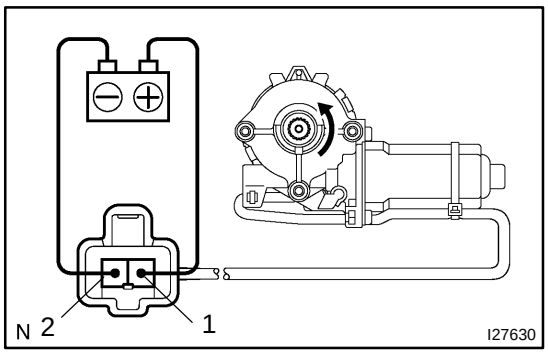

(b) Reverse the polarity and check that the motor turns counterclockwise.

If operation is not as specified, replace the motor.

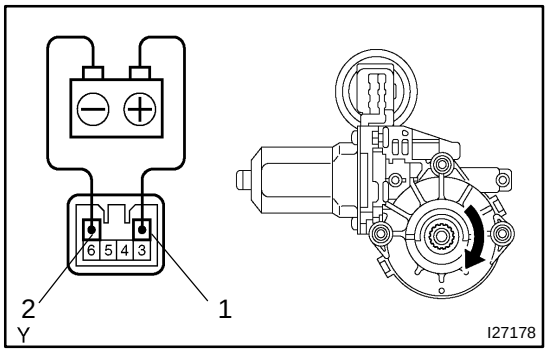

5. Rear right door:
INSPECT POWER WINDOW MOTOR OPERATION

(a) Connect the positive (+) lead from the battery to terminal 1 and the negative (−) lead to terminals 2, then check that the motor turns clockwise.

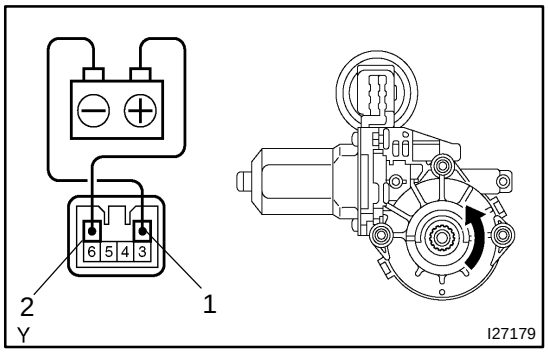

(b) Reverse the polarity, and check that the motor turns counterclockwise.

If operation is not as specified, replace the motor.

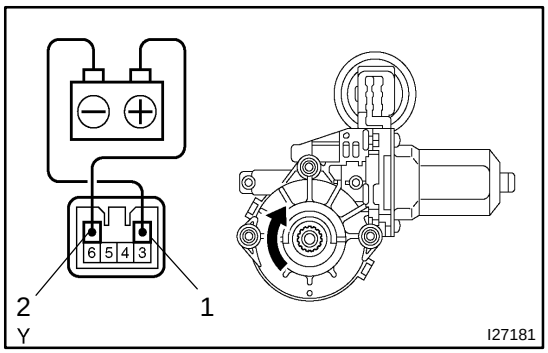

6. Rear left door:
INSPECT POWER WINDOW MOTOR OPERATION

(a) Connect the positive (+) lead from the battery to terminal 2 and the negative (−) lead to terminal 1, then check that the motor turns clockwise.

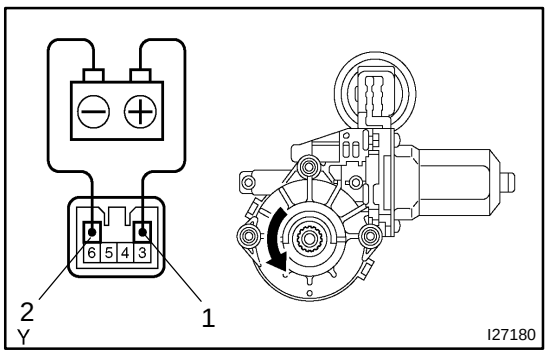

(b) Reverse the polarity and check that the motor turns counterclockwise.

If operation is not as specified, replace the motor.

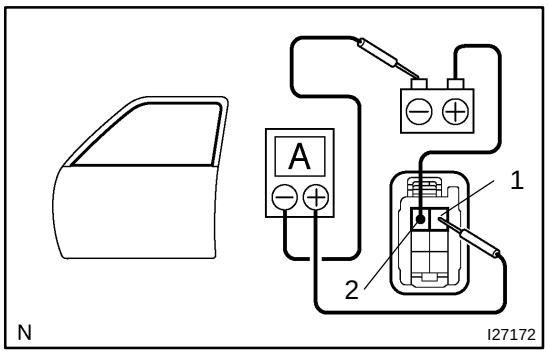

7. Driver side door:
INSPECT POWER WINDOW MOTOR PTC THERMISTOR OPERATION

(a) Disconnect the connector from the motor.
(b) Connect the positive (+) lead from the ammeter to terminal 1 of the motor side connector and the negative (−) lead to negative terminal of the battery.
(c) Connect the positive (+) lead from the battery to terminal 2 of the motor side connector, and raise the window to the fully closed position.
(d) Continue to apply voltage and check that the current changes from approximately 14 A to less than 1 A within 4 to 90 seconds.
(e) Disconnect the leads from the terminals.
(f) Approximately 90 seconds later, connect the positive (+) lead from the battery to terminal 1 and the negative (−) lead to terminal 2, then check that the window begins to move down.

If operation is not as specified, replace the motor.

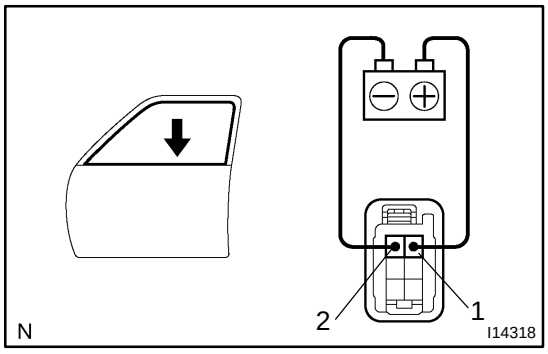

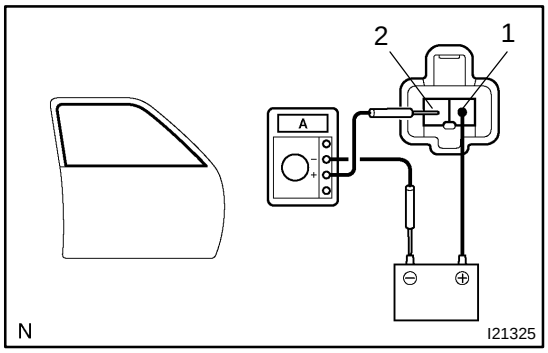

8. Passenger side door:
INSPECT POWER WINDOW MOTOR PTC THERMISTOR OPERATION

(a) Disconnect the connector from the motor.
(b) Connect the positive (+) lead from the ammeter to terminal 2 of the motor connector and the negative (−) lead to negative terminal of the battery.
(c) Connect the positive (+) lead from the battery to terminal 1 of the motor connector, and raise the window to the fully closed position.
(d) Continue to apply voltage and check that the current changes from approximately 14 A to less than 1 A within 4 to 90 seconds.
(e) Disconnect the leads from the terminals.
(f) Approximately 90 seconds later, connect the positive (+) lead from the battery to terminal 2 and the negative (−) lead to terminal 1, then check that the window begins to move down.

If operation is not as specified, replace the motor.

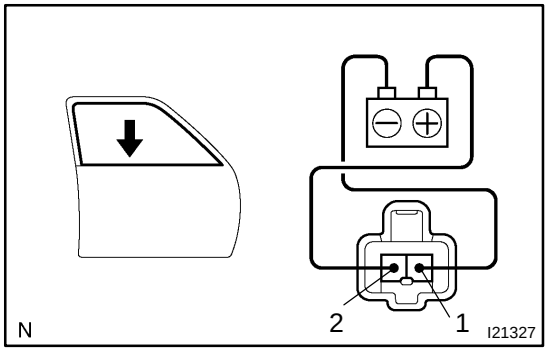

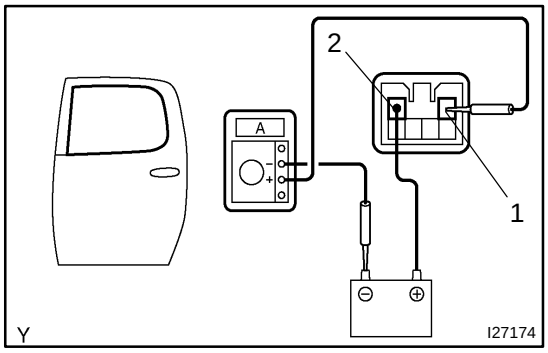

9. Rear left door:
INSPECT POWER WINDOW MOTOR PTC THERMISTOR OPERATION

(a) Disconnect the connector from the motor.
(b) Connect the negative (+) lead from the ammeter to terminal 1 of the motor connector and the negative (−) lead to negative terminal of the battery.
(c) Connect the positive (+) lead from the battery to terminal 2 of the motor connector, and raise the window to the fully closed position.

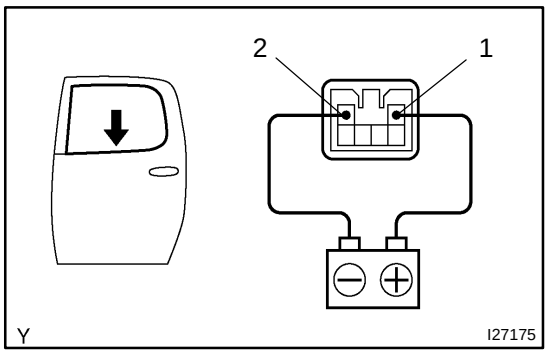

(d) Continue to apply voltage and check that the current changes from approximately 14 A to less than 1 A within 4 to 90 seconds.
(e) Disconnect the leads from the terminals.
(f) Approximately 90 seconds later, connect the positive (+) lead from the battery to terminal 1 and the negative (−) lead to terminal 2, then check that the window begins to move down.

If operation is not as specified, replace the motor.

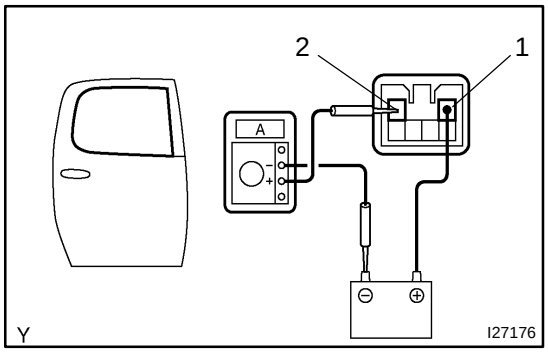

10. Rear right door:
INSPECT POWER WINDOW MOTOR PTC THERMISTOR OPERATION

(a) Disconnect the connector from the motor.
(b) Connect the negative (+) lead from the ammeter to terminal 2 of the motor connector and the negative (−) lead to negative terminal of the battery.
(c) Connect the positive (+) lead from the battery to terminal 1 of the motor connector, and raise the window to the fully closed position.

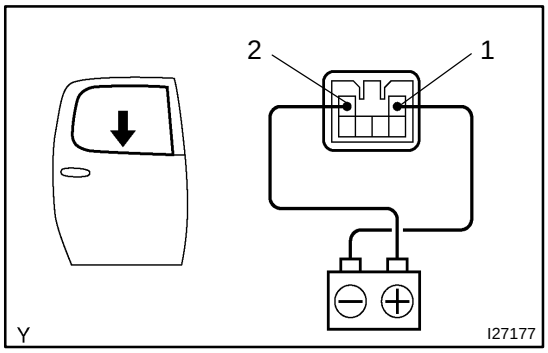

(d) Continue to apply voltage and check that the current changes from approximately 14 A to less than 1 A within 4 to 90 seconds.
(e) Disconnect the leads from the terminals.
(f) Approximately 90 seconds later, connect the positive (+) lead from the battery to terminal 2 and the negative (−) lead to terminal 1, check that the window begins to move down.

If operation is not as specified, replace the motor.

POWER WINDOW CONTROL SYSTEM (Double Cab)

BE2LE−01

LOCATION

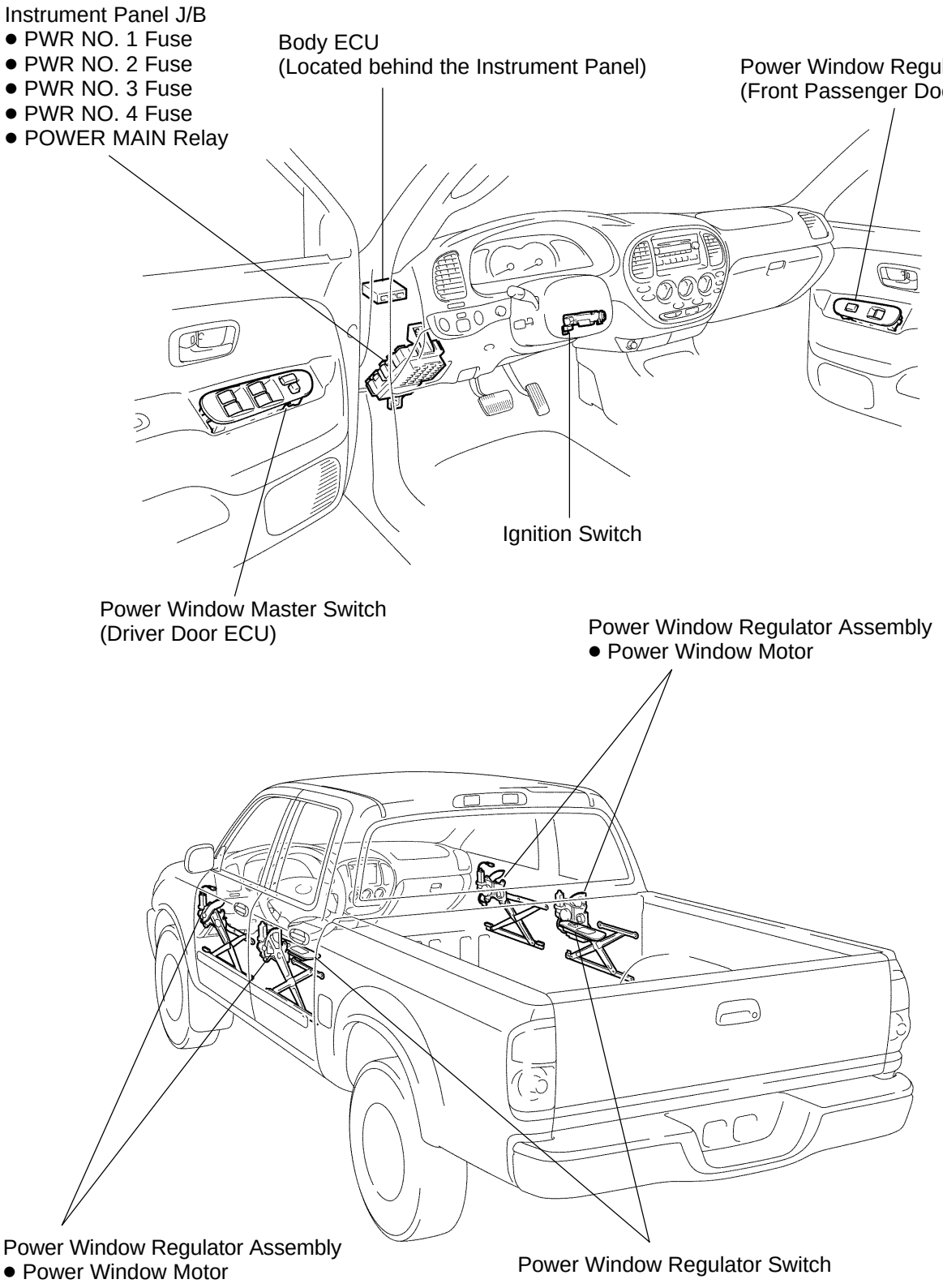

P

I27062

BE2LH−01

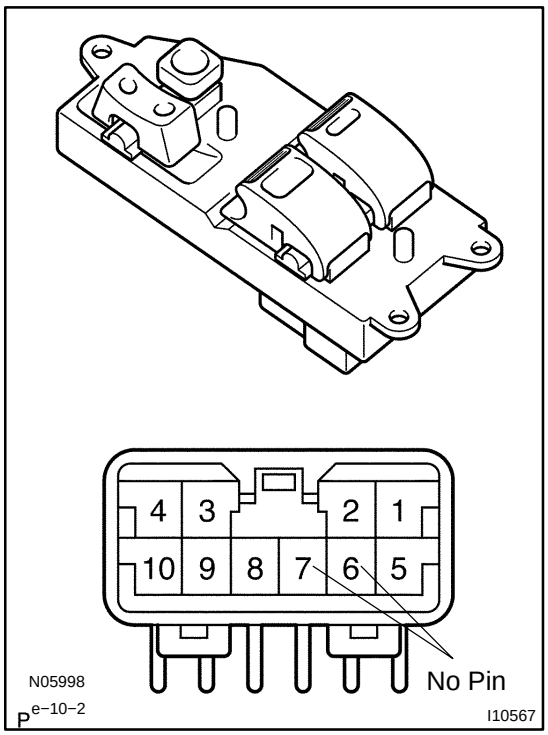

INSPECTION

1. INSPECT POWER WINDOW MASTER SWITCH CONTINUITY

Driver's switch:

Switch Position	Tester Connection	Specified Condition
UP	1 − 4, 3 − 9	Continuity
OFF	1 − 3 − 4	Continuity
DOWN (AUTO)	1− 3, 4 − 9	Continuity

Passenger's switch (Window unlock):

Switch Position	Tester Connection	Specified Condition
UP	1 − 10, 8 − 9	Continuity
OFF	1 − 8 − 10	Continuity
DOWN	1 − 8, 9 − 10	Continuity

Passenger's switch (Window lock):

Switch Position	Tester Connection	Specified Condition
UP	8 − 9	Continuity
OFF	8 − 10	Continuity
DOWN	9 − 10	Continuity

If the continuity is not as specified, replace the switch.

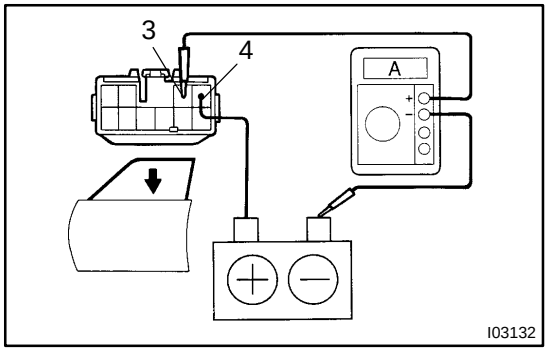

2. Using an ammeter:

INSPECT ONE−TOUCH POWER WINDOW SYSTEM/ CURRENT OF CIRCUIT

(a) Disconnect the connector from the master switch.

(b) Connect the positive (+) lead from the ammeter to terminal 3 on the wire harness side connector and the negative (−) lead to the negative (−) terminal of the battery.

(c) Connect the positive (+) lead from the battery to terminal 4 on the wire harness side connector.

(d) When the window moves down, check that the current is approximately 7 A.

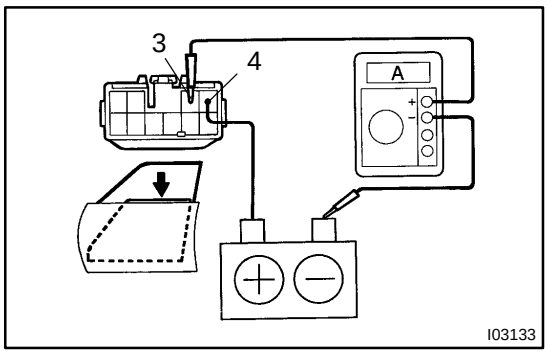

(e) Check that the current increases to approximately 14.5 A or more when the window stops moving down.

HINT:

Since the PTC opens in 4 to 90 seconds after the window stops moving down, the check must be performed before the PTC starts operating.

If the result is not as specified, replace the switch.

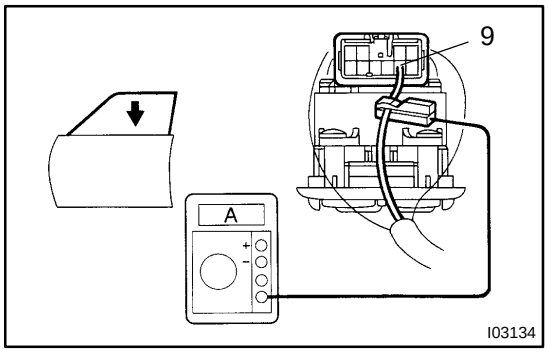

3. Using an ammeter with a current−measuring probe: INSPECT ONE TOUCH POWER WINDOW SYSTEM/ CURRENT OF CIRCUIT

(a) Remove the master switch with the connector connected.

(b) Attach a current−measuring probe to terminal 9 of the wire harness side connector.

(c) Turn the ignition switch ON and set the power window switch in the down position.

(d) When the window moves down, check that the current is approximately 7 A.

(e) Check that the current increases to approximately 14.5 A or more when the window stops moving down.

HINT:

Since the circuit breaker opens in 4 to 90 seconds after the window stops moving down, the check must be performed before the PTC starts operating.

If the result is not as specified, replace the master switch.

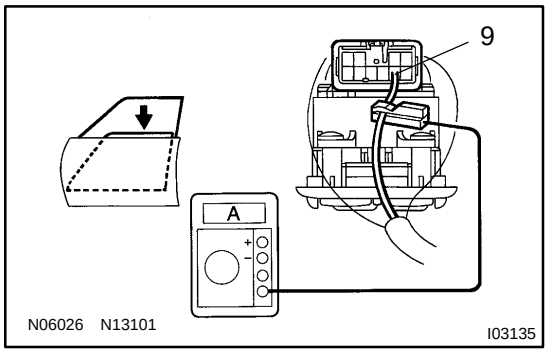

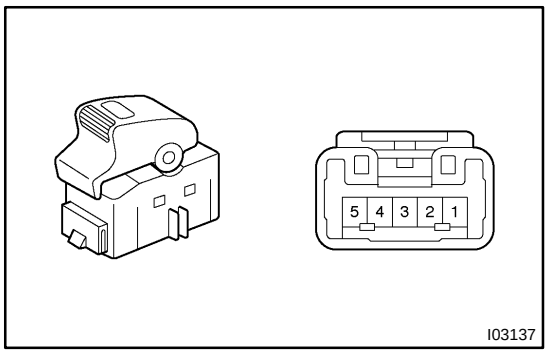

4. INSPECT POWER WINDOW REGULATOR SWITCH CONTINUITY

Switch Position	Tester Connection	Specified Condition
UP	1 − 2, 3 − 4	Continuity
OFF	1 − 2, 3 − 5	Continuity
DOWN	1 − 4, 3 − 5	Continuity

If the continuity is not as specified, replace the switch.

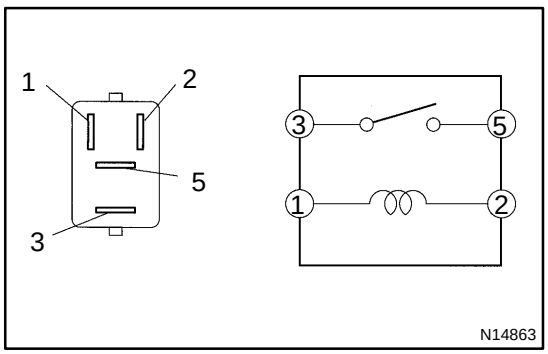

5. INSPECT POWER RELAY CONTINUITY

If the continuity is not as specified, replace the switch.

Tester Connection	Specified Condition
3 − 5	No continuity
3 − 5	Continuity (When battery voltage is applied to terminals 1 and 2)

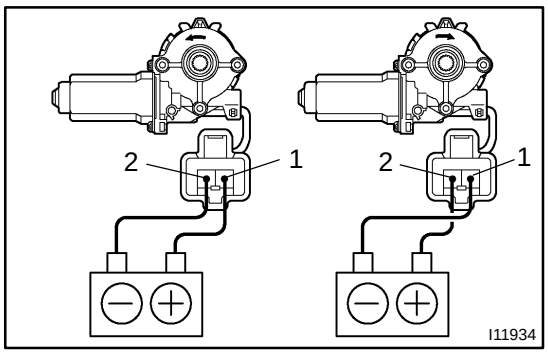

6. Driver side door:
INSPECT POWER WINDOW MOTOR OPERATION

(a) Connect the positive (+) lead from the battery to terminal 1 and the negative (−) lead to terminal 2, and check that the motor turns counterclockwise.

(b) Reverse the polarity, and check that the motor turns clockwise.

If operation is not as specified, replace the motor.

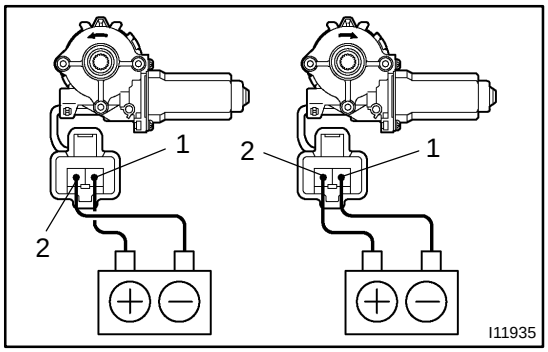

7. Passenger side door:
INSPECT POWER WINDOW MOTOR OPERATION

(a) Connect the positive (+) lead from the battery to terminal 1 and the negative (−) lead to terminal 2, and check that the motor turns counterclockwise.

(b) Reverse the polarity, and check that the motor turns clockwise.

If operation is not as specified, replace the motor.

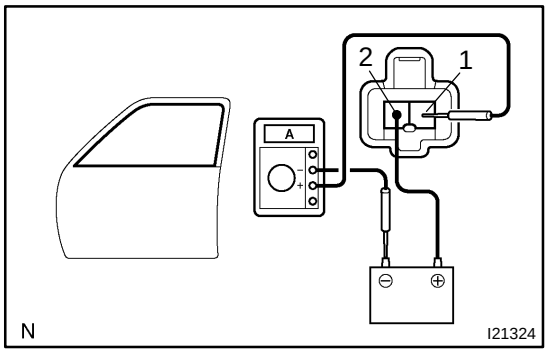

8. Driver side door:
INSPECT POWER WINDOW MOTOR PTC THERMISTOR OPERATION

(a) Disconnect the connector from the motor.

(b) Connect the positive (+) lead from the ammeter to terminal 1 of the wire motor connector and the negative (−) lead to the negative terminal of the battery.

(c) Connect the positive (+) lead from the battery to terminal 2 of the motor connector, and raise the window to the fully closed position.

(d) Continue to apply voltage, and check that the current changes to less than 1 A in 4 to 90 seconds.

(e) Disconnect the leads from the terminals.

(f) Approximately 60 seconds later, connect the positive (+) lead from the battery to terminal 1 and the negative (−) lead to terminal 2, and check that the window begins to move down.

If operation is not as specified, replace the motor.

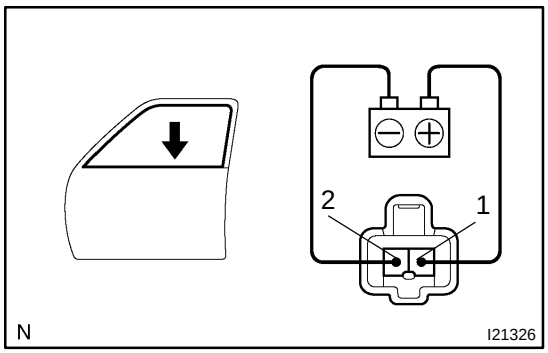

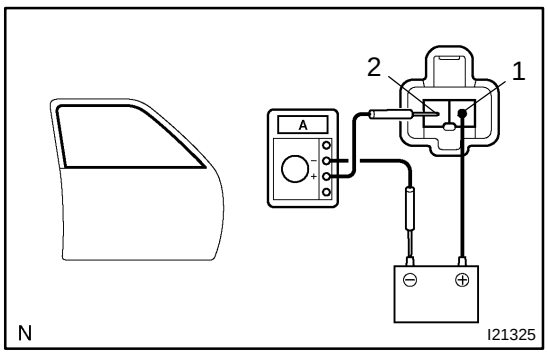

9. Passenger side door:
INSPECT POWER WINDOW MOTOR PTC THERMISTOR OPERATION

(a) Disconnect the connector from the motor.

(b) Connect the positive (+) lead from the ammeter to terminal 2 of the motor connector and the negative (−) lead to the negative terminal of the battery.

(c) Connect the positive (+) lead from the battery to terminal 1 of the motor connector, and raise the window to the fully closed position.

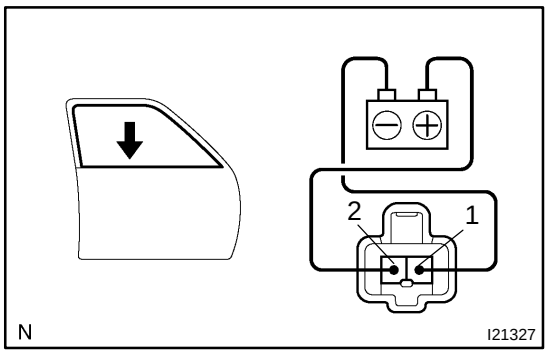

(d) Continue to apply voltage and check that the current changes to less than 1 A in 4 to 90 seconds.
(e) Disconnect the leads from the terminals.
(f) Approximately 60 seconds later, connect the positive (+) lead from the battery to terminal 2 and the negative (−) lead to terminal 1, and check that the window begins to move down.

If operation is not as specified, replace the motor.

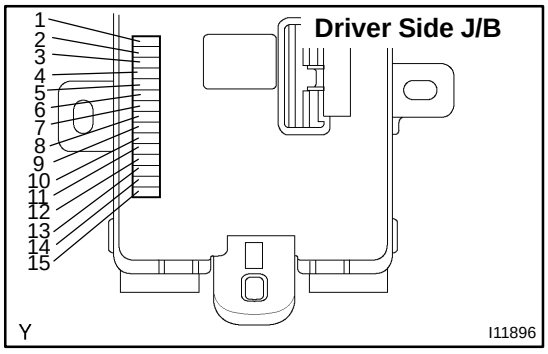

10. CHECK INTEGRATION RELAY

Remove the integration relay from the driver side J/B, and check the voltage or continuity of each terminal on the driver side J/B side (see page BE−180).

POWER WINDOW CONTROL SYSTEM (Except Double Cab)

BE2LG–01

LOCATION

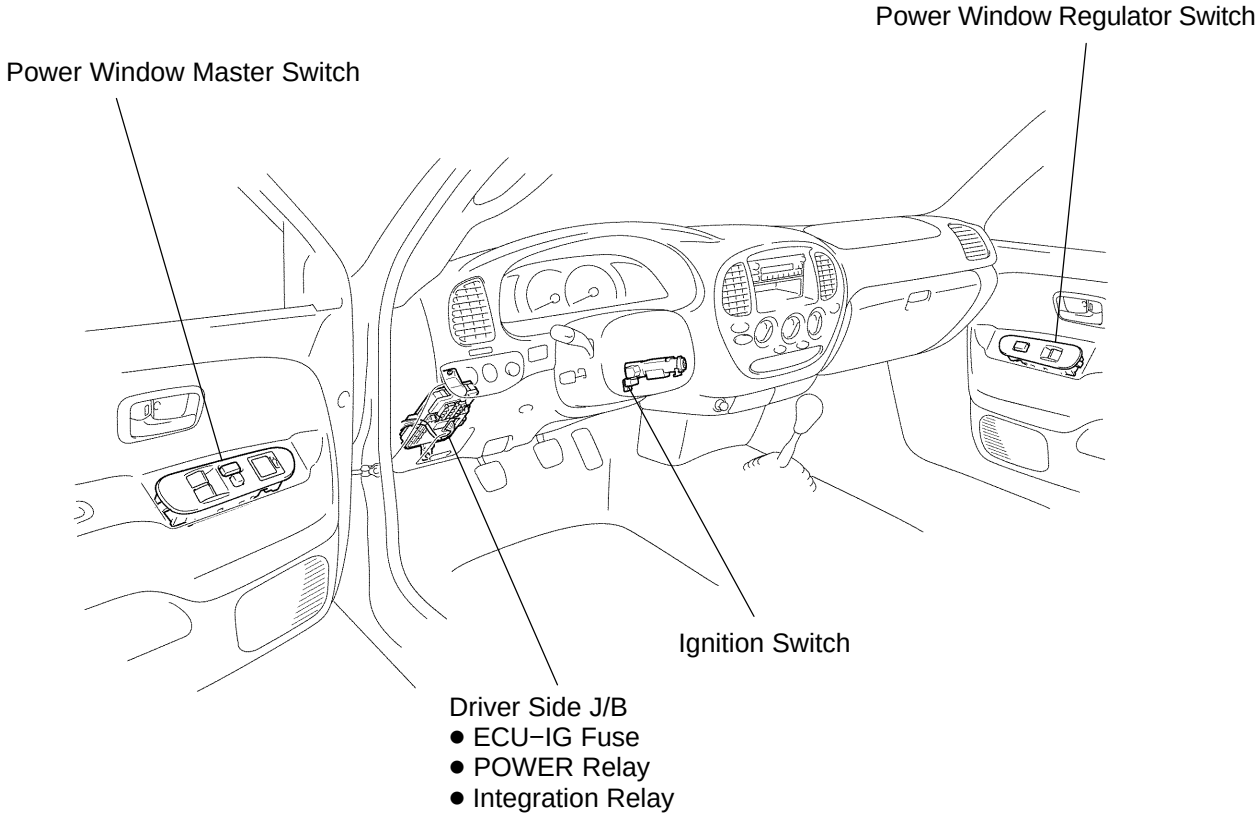

Power Window Regulator Assembly
● Power Window Motor

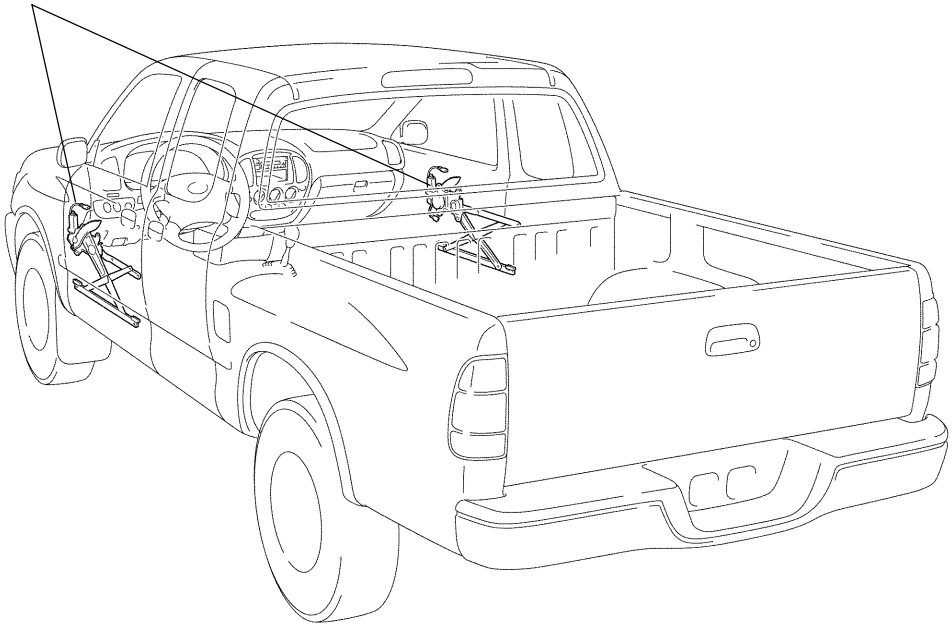

P

I25443

BE2KK−01

INSPECTION

1. INSPECT SEAT HEATER SWITCH CONTINUITY

Switch Position	Tester Connection	Specified Condition
HI	3 − 4, 5 − 6	Continuity
LO	4 − 5	Continuity
Illumination circuit	1 − 2	Continuity

If the continuity is not as specified, replace the switch.

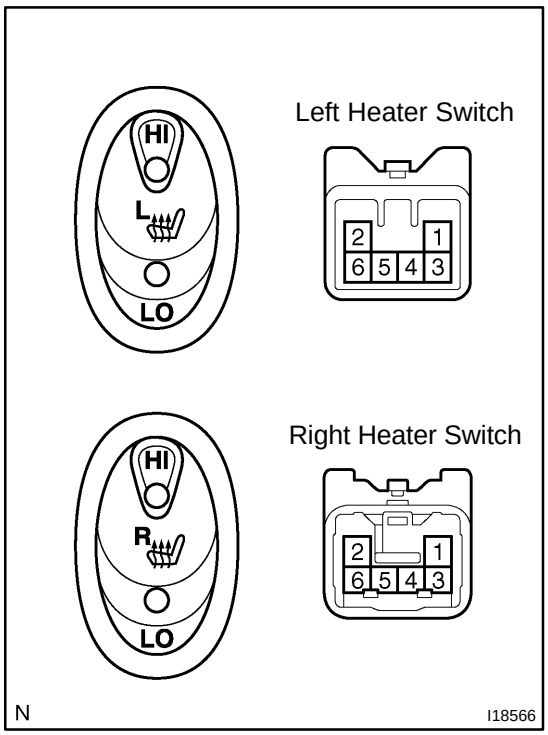

2. INSPECT SEAT HEATER INDICATOR LIGHT OPERATION

(a) Connect the positive (+) lead from the battery to terminal 4 and the negative (−) lead to terminal 6.

(b) Push the seat heater switch on the HI position and check that the HI indicator light turns on.

(c) Push the seat heater switch on the LO position and check that the LO indicator light turns on.

If operation is not as specified, replace the switch.

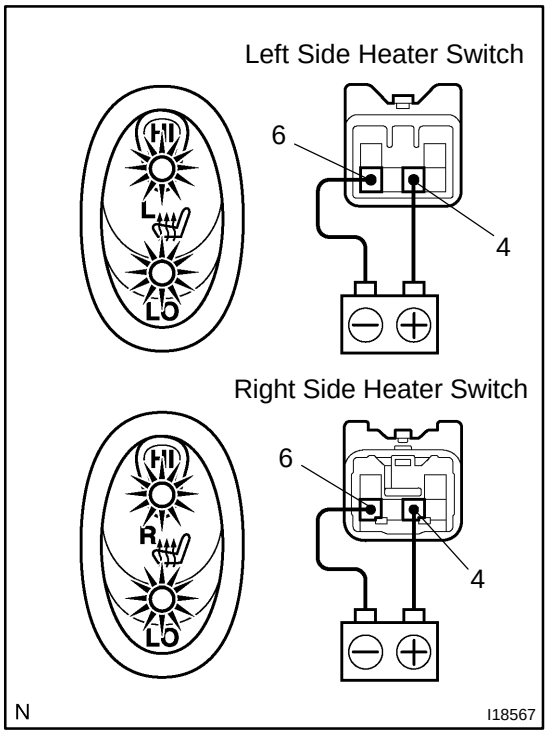

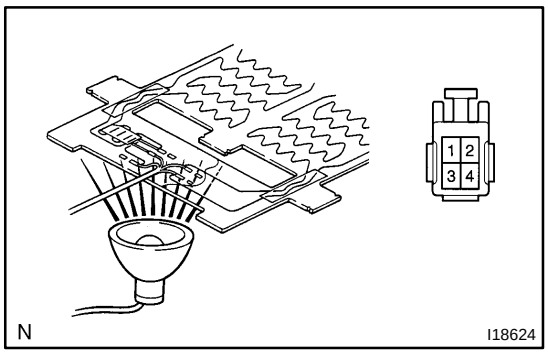

3. INSPECT SEAT CUSHION HEATER CONTINUITY

(a) Heat the thermostat with a light.

(b) Inspect the seat cushion heater continuity between the terminals, as shown in the illustration.

Tester Connection	Condition	Specified Condition
2 − 4	Constant	Continuity
1 − 3	Seat heater temperature below 30˚C (80˚F)	Continuity
1 − 3	Seat heater temperature above 40˚C (104˚F)	No continuity

If the continuity is not as specified, replace the seat cushion pad.

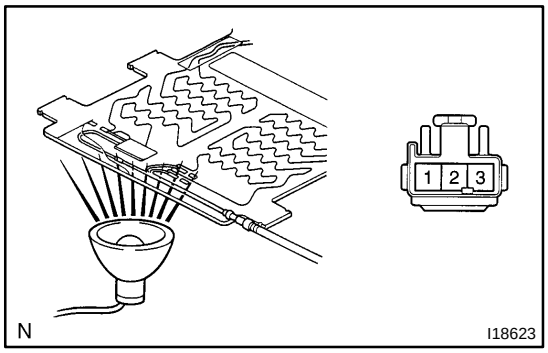

4. INSPECT SEATBACK HEATER CONTINUITY

(a) Heat the thermostat with a light.

(b) Inspect the seatback heater continuity between terminals, as shown in the illustration.

Tester Connection	Condition	Specified Condition
2 − 3	Constant	Continuity
1 − 2, 1 − 3	Seat heater temperature below 30˚C (86˚F)	Continuity
1 − 2, 1 − 3	Seat heater temperature above 50˚C (122˚F)	No continuity

If the continuity is not as specified, replace the seatback pad.

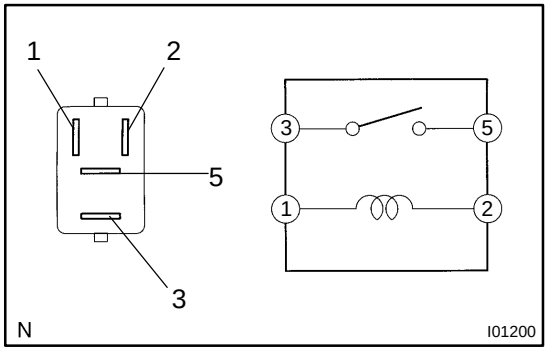

5. INSPECT SEAT HEATER RELAY CONTINUITY

Tester Connection	Specified Condition
3 − 5	No continuity
3 − 5	Continuity (When battery voltage is applied to terminals 1 and 2)

If the continuity is not as specified, replace the relay.

SEAT HEATER SYSTEM (Double Cab)

BE2KJ−01

LOCATION

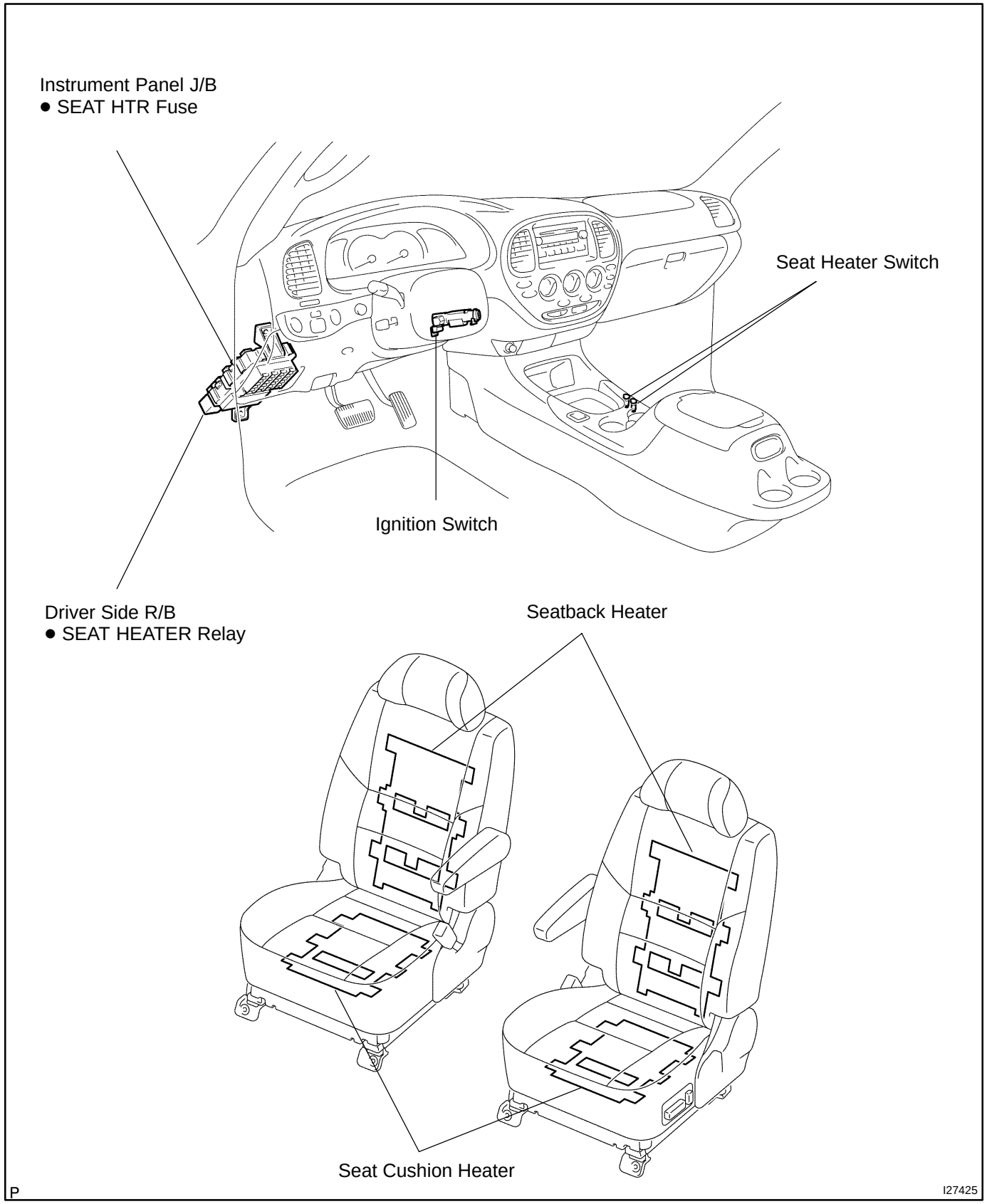

BE2LU−02

INSPECTION

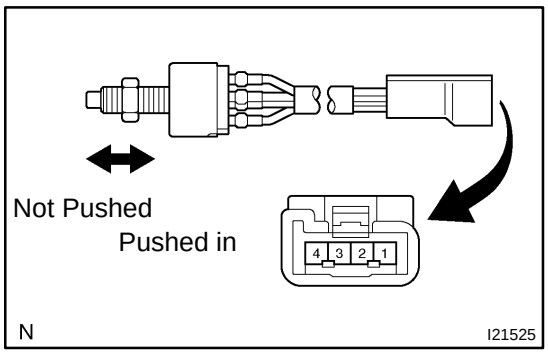

1. Double cab:
INSPECT STOP LIGHT SWITCH CONTINUITY

Switch Position	Tester Connection	Specified Condition
Not pushed	1 − 4	Continuity
Pushed in	1 − 4	No continuity
Not pushed	2 − 3	No continuity
Pushed in	2 − 3	Continuity

If the continuity is not as specified, replace the switch.

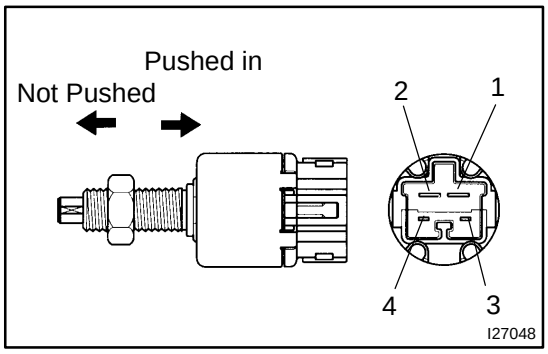

2. Except double cab:
INSPECT STOP LIGHT SWITCH CONTINUITY

Switch Position	Tester Connection	Specified Condition
Not pushed	1 − 2	Continuity
Pushed in	1 − 2	No continuity
Not pushed	3 − 4	No continuity
Pushed in	3 − 4	Continuity

If the continuity is not as specified, replace the switch.

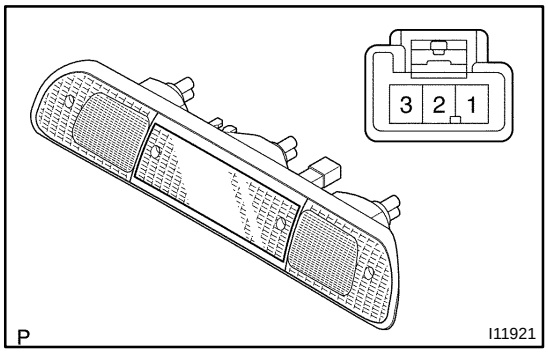

3. INSPECT HI−MOUNTED STOP LIGHT ASSEMBLY CONTINUITY

Using an ohmmeter, check that continuity exists between terminals 1 and 2.

If the continuity is not as specified, replace the bulb or light.

STOP LIGHT SYSTEM

LOCATION

BE2LT−01

Double Cab

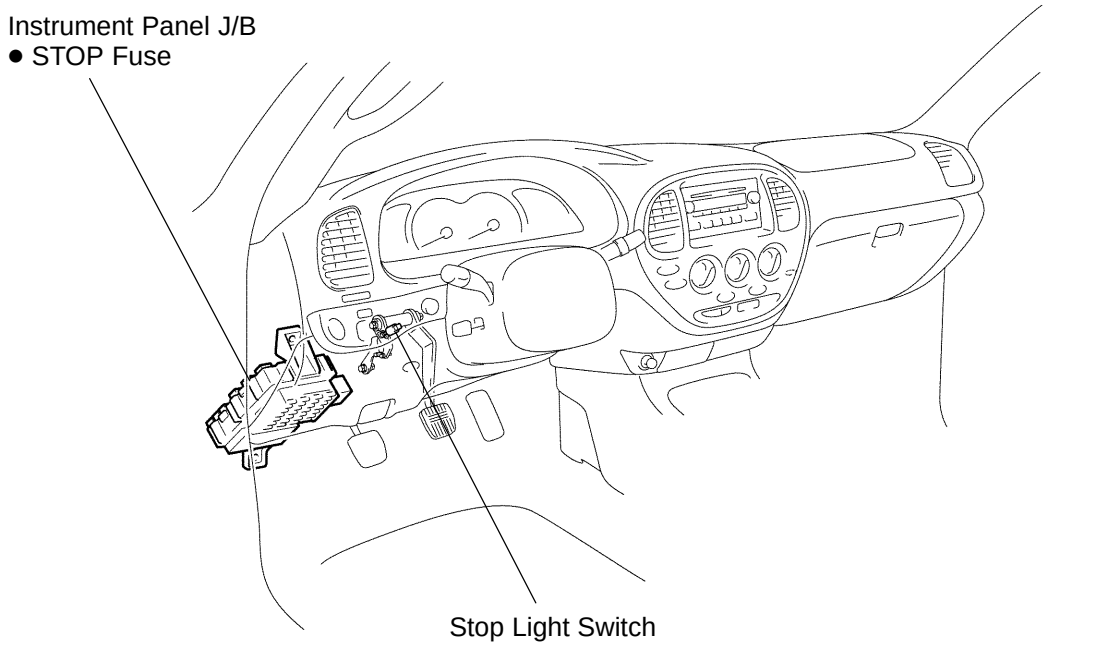

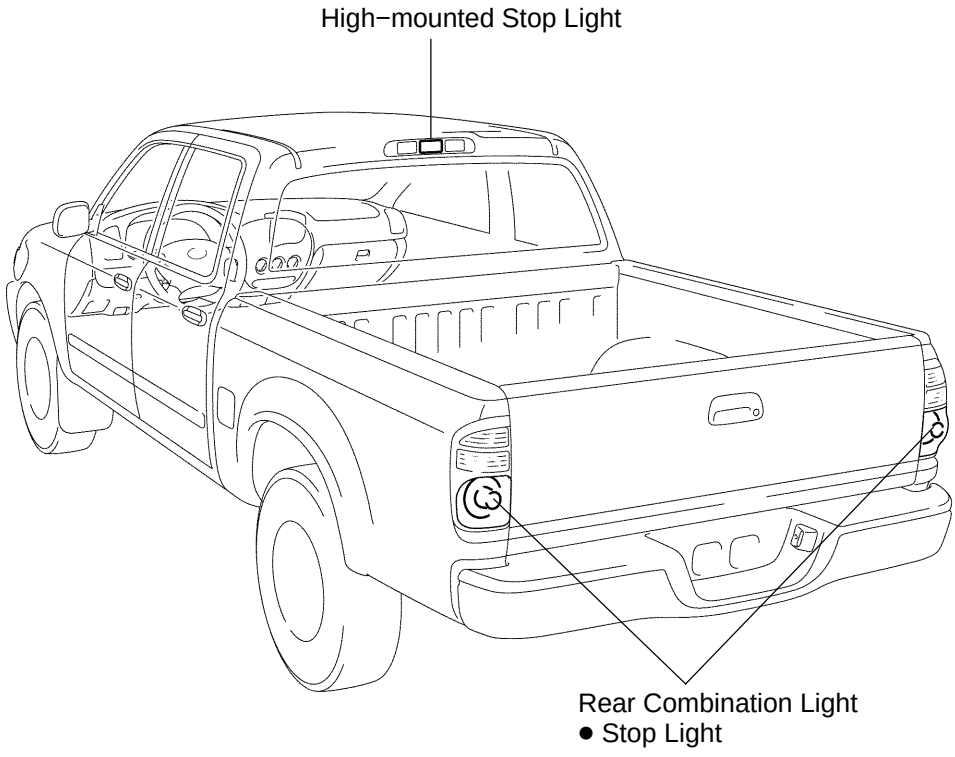

P

I27620

Except Double Cab

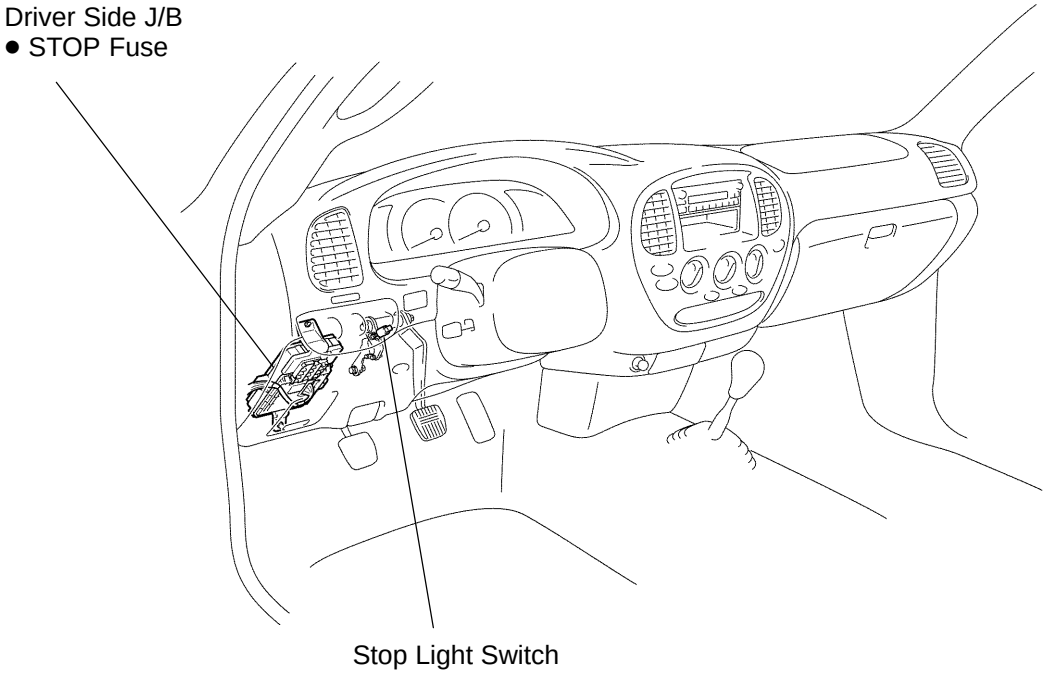

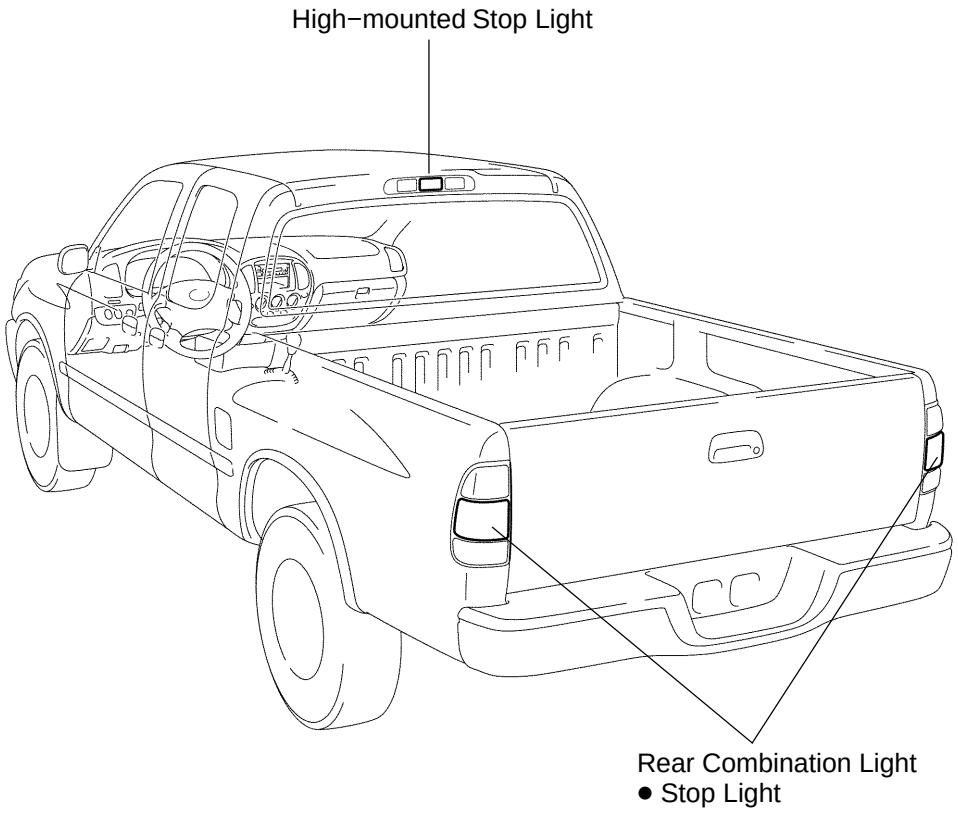

P

I27618

BE2KW−01

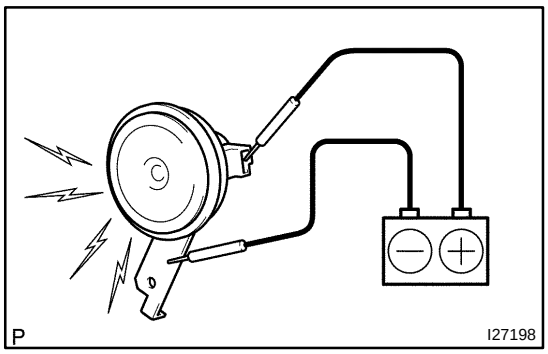

INSPECTION

1. INSPECT SECURITY HORN OPERATION

Connect the positive (+) lead from the battery to terminal 1 and the negative (−) lead to the horn body, and check that the horn blows.

If operation is not as specified, replace the horn.

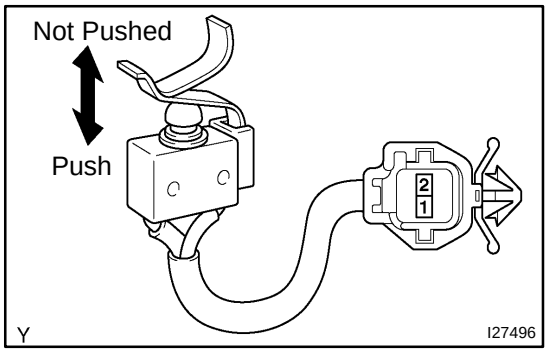

2. INSPECT ENGINE HOOD COURTESY SWITCH CONTINUITY

Condition	Tester Connection	Specified Condition
Push	1 − 2	No continuity
Not pushed	1 − 2	Continuity

If the continuity is not as specified, replace the switch.

THEFT DETERRENT SYSTEM (Double Cab)

BE2KX−01

ON−VEHICLE INSPECTION

1. OUTLINE OF THEFT DETERRENT SYSTEM

(a) When the theft deterrent system detects that the vehicle is being tampered with, the system sets off the alarm, causing the horns to sound and the lights to light up or flash in order to alert people around the vehicle to the theft.

(b) The theft deterrent system has 2 modes; one is the active arming mode that is an initially set mode and another is the passive arming mode that can be switched by the hand−held tester.

(c) Each mode (active and passive) has 4 states; the disarmed state, the arming preparation state, the armed state and the alarm sounding state.

(1) Disarmed state:
- The alarm function is not operating.
- The theft deterrent system is not operating.

(2) Arming preparation state:
- The theft deterrent system is not operating.

(3) Armed state:
- The theft deterrent system is operating.

(4) Alarm sounding state:
When the theft deterrent system detects that the vehicle is being tampered with while in the armed state, the system causes the horns to sound and the lights to light up or flash in order to alert people around the vehicle to the theft.

Refer to table below for alarm method and time:

Alarming method	Headlight	Flashing at a cycle of approx. 0.4 seconds
	Taillight	Flashing at a cycle of approx. 0.4 seconds
	Interior light	Illuminating (turn on)
	Vehicle horn	Sounding at a cycle of approx. 0.4 seconds
	Security horn	Sounding at a cycle of approx. 0.4 seconds
Alarming time	Approx. 60 seconds	

HINT:
If any of the doors are unlocked with no key in the ignition key cylinder during the alarm sounding state, a forced door lock signal will be output (see step 4).

2. ACTIVE ARMING MODE

- Active arming mode starts the alarm control immediately after the doors are locked.

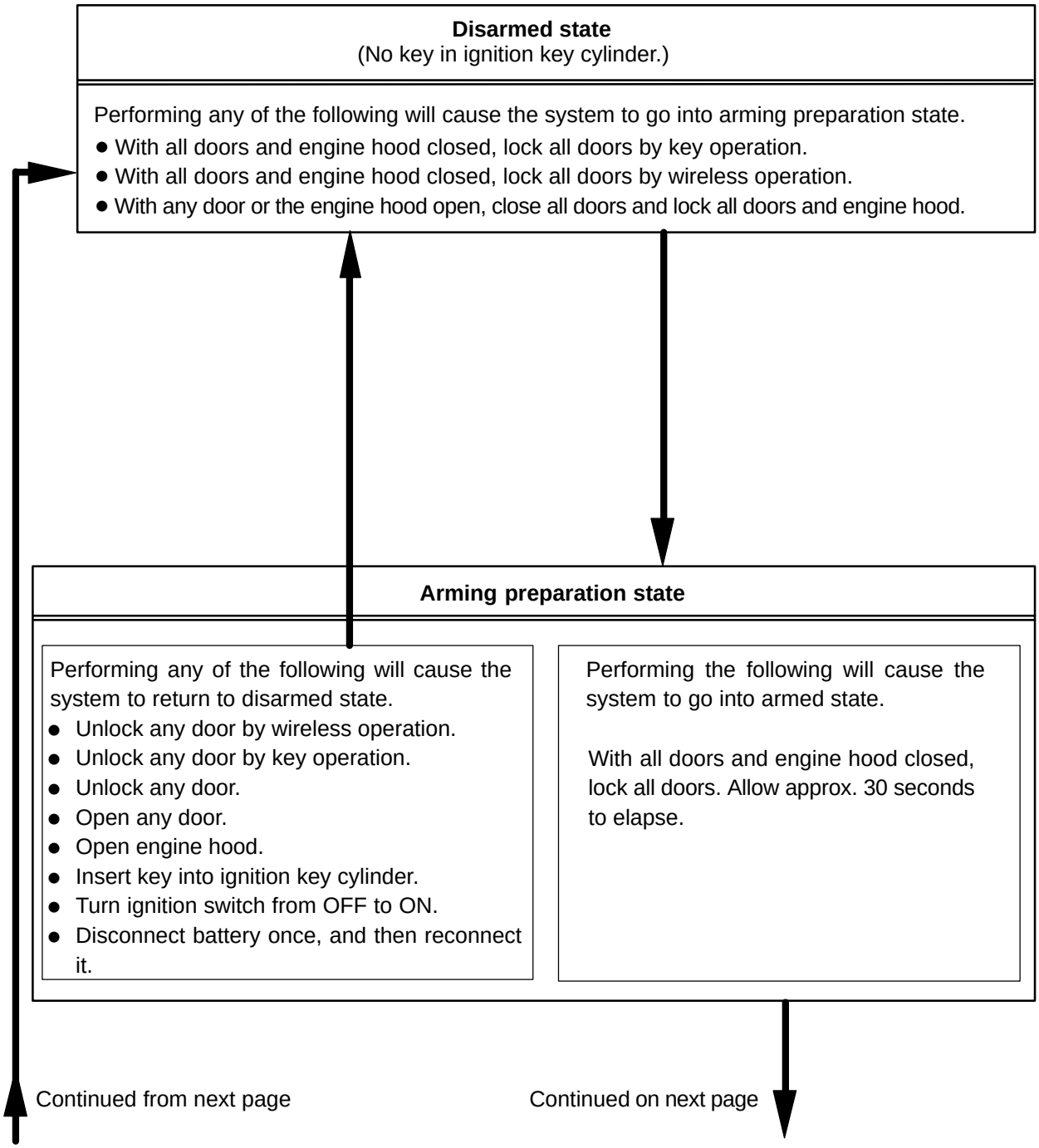

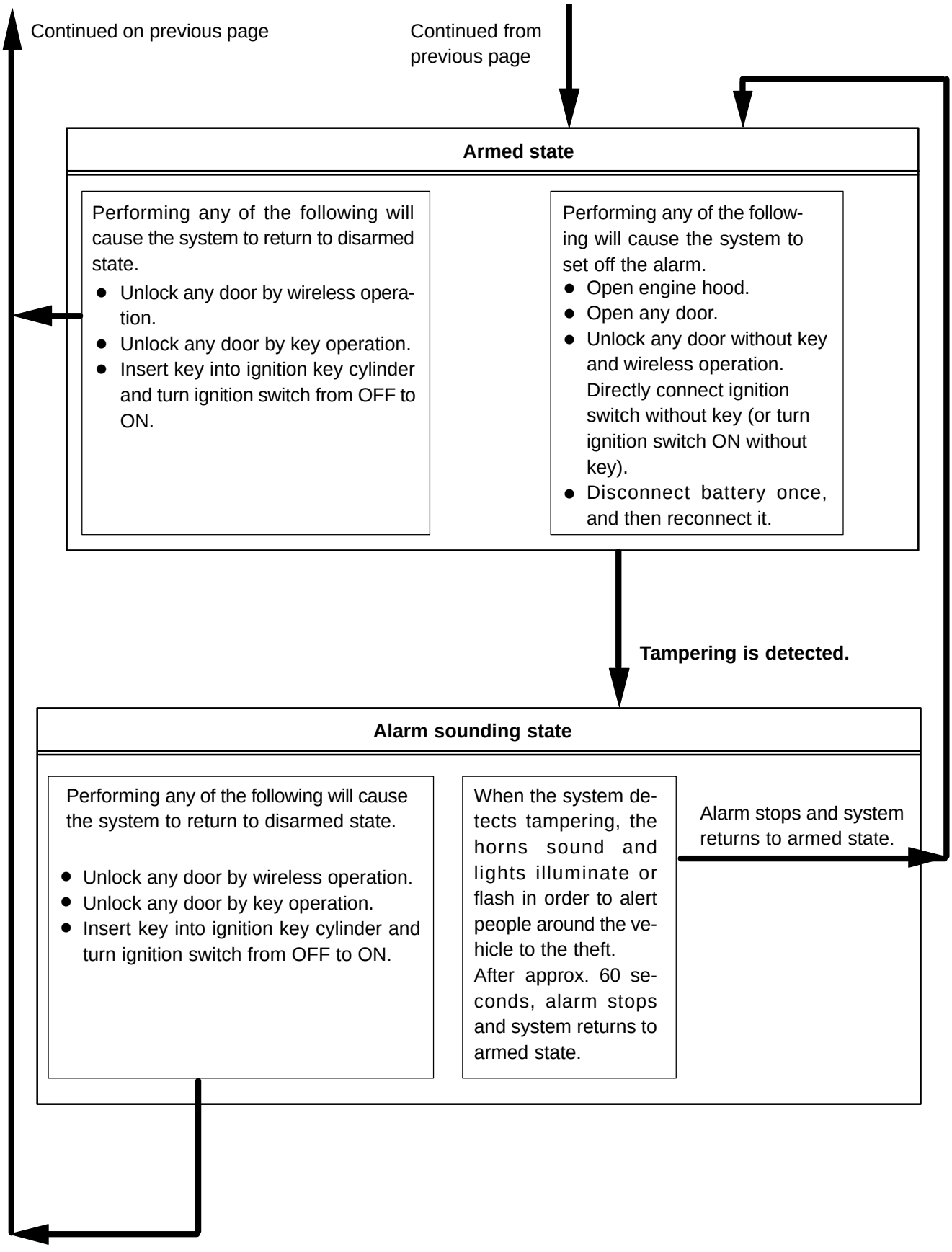
Continued on previous page
Continued from previous page
Armed state
Performing any of the following will cause the system to return to disarmed state.
● Unlock any door by wireless operation.
● Unlock any door by key operation.
● Insert key into ignition key cylinder and turn ignition switch from OFF to ON.
Performing any of the following will cause the system to set off the alarm.
● Open engine hood.
● Open any door.
● Unlock any door without key and wireless operation. Directly connect ignition switch without key (or turn ignition switch ON without key).
● Disconnect battery once, and then reconnect it.
Tampering is detected.
Alarm sounding state
Performing any of the following will cause the system to return to disarmed state.
● Unlock any door by wireless operation.
● Unlock any door by key operation.
● Insert key into ignition key cylinder and turn ignition switch from OFF to ON.
When the system detects tampering, the horns sound and lights illuminate or flash in order to alert people around the vehicle to the theft.
After approx. 60 seconds, alarm stops and system returns to armed state.
Alarm stops and system returns to armed state.
Alarm operation is cancelled.

3. PASSIVE ARMING MODE

- Passive arming mode can be switched ON/OFF by the hand−held tester.
- The alarm is initially set (when shipped from factory) to active arming mode (not passive arming mode).
- During passive arming mode, the theft deterrent system goes into the armed state even if the doors are not locked.
- Passive arming mode starts the alarm control after the key is removed from the ignition key cylinder and the doors are closed.
- Detecting that the doors are unlocked does not set off the alarm during passive arming mode.
- A forced door lock signal is not output during passive arming mode (see step 4).
- When the theft deterrent system detects that the doors are opened during passive arming mode, the alarm is not set off immediately because an entry delay time is set.
- If any of the following conditions is met during passive arming mode, the theft deterrent system will switch to active arming mode.
  - With all doors and engine hood closed, lock all doors by key operation.
  - With all doors and engine hood closed, lock all doors by wireless operation.
  - With any door or the engine hood open, close all doors and lock all doors and engine hood.

HINT:
*1: Disarmed state (1) is the normal disarmed state.
*2: Disarmed state (2) is set from either the disarmed state (1) or the arming preparation state.

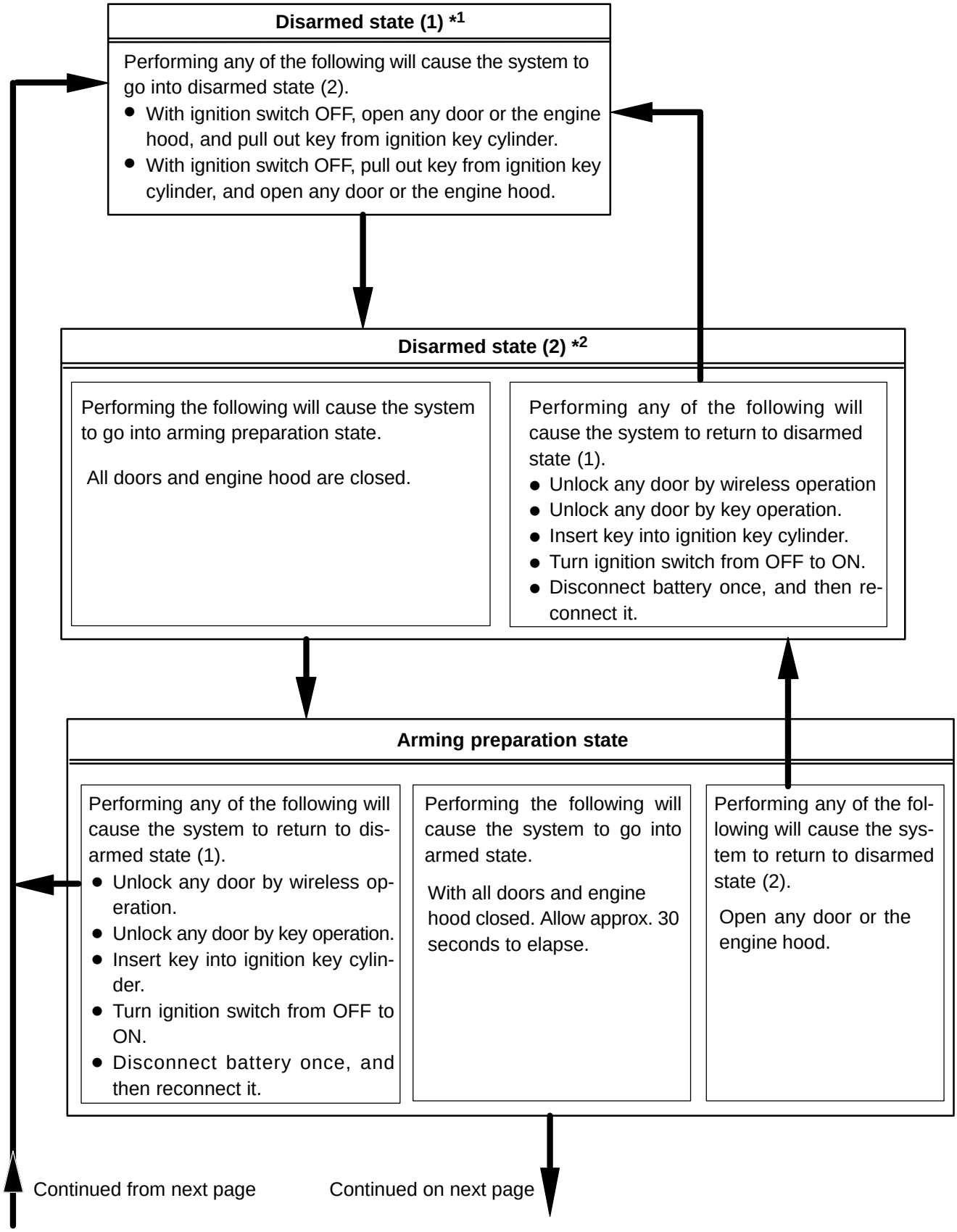

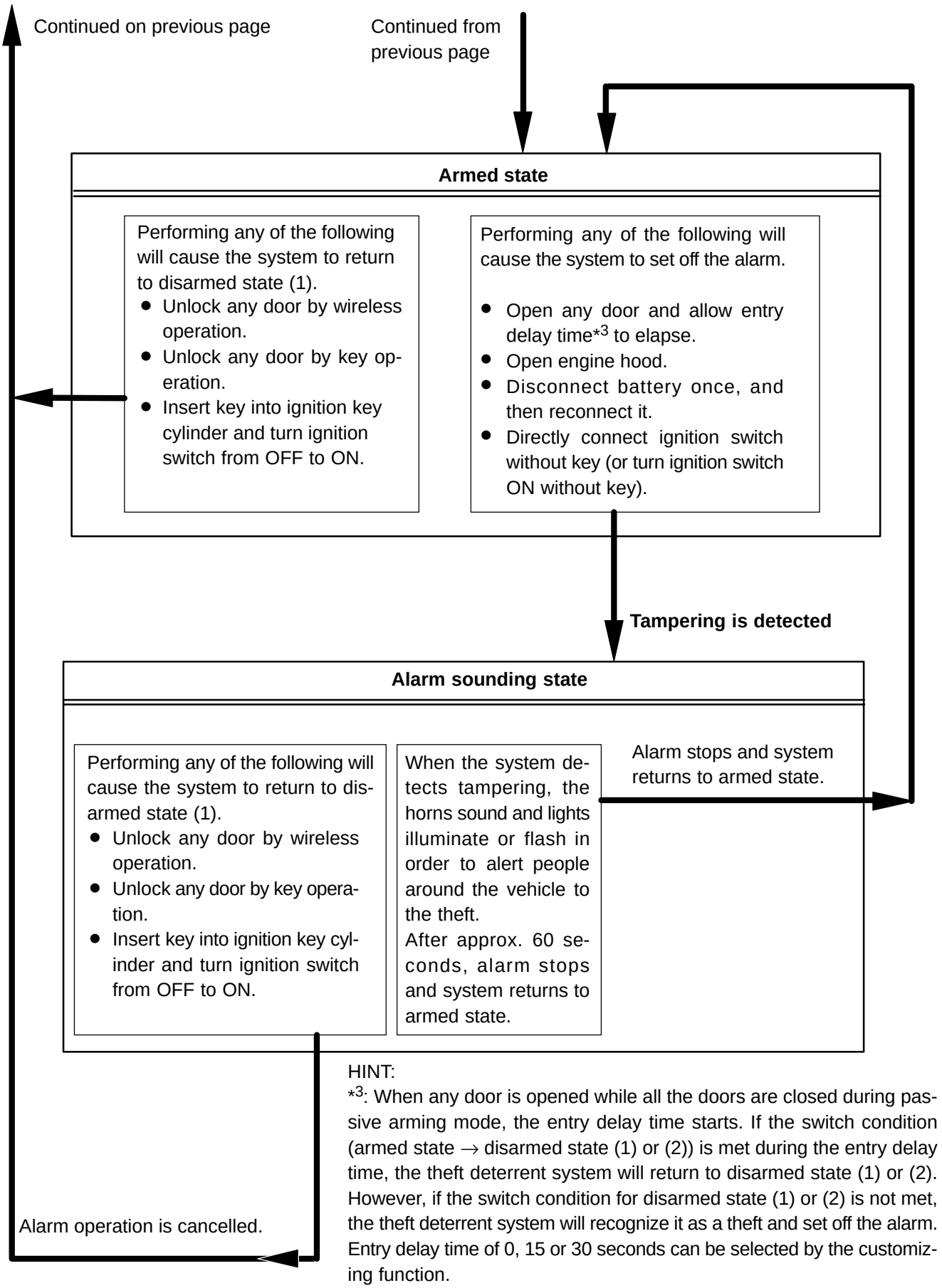

HINT:

*3: When any door is opened while all the doors are closed during passive arming mode, the entry delay time starts. If the switch condition (armed state → disarmed state (1) or (2)) is met during the entry delay time, the theft deterrent system will return to disarmed state (1) or (2). However, if the switch condition for disarmed state (1) or (2) is not met, the theft deterrent system will recognize it as a theft and set off the alarm. Entry delay time of 0, 15 or 30 seconds can be selected by the customizing function.

4. FORCED DOOR LOCK CONTROL

(a) The forced door lock control prevents the vehicle from being tampered with. Immediately after a door is unlocked (alarm starts), the door is forced to lock by a forced door lock signal.

(1) Conditions that force the doors to lock:

When no key is in the ignition key cylinder, the doors will be forced to lock if any of the following conditions is met.

- The theft deterrent system is in the alarm sounding state of active arming mode.
- All the doors are locked. → Any door is unlocked.

5. Indicator light output

Condition	Indicator light
Disarmed state	OFF
Arming preparation state	ON
Armed state (Entry delay time)	BLINK (ON)
Alarm sounding state	ON

HINT:

Blinking frequency:

0.2 seconds (ON)

1.8 seconds (OFF)

6. PANIC ALARM CONTROL

(a) The panic alarm control makes it possible for you to voluntarily set off the panic alarm by pressing the PANIC switch on the wireless transmitter. However, this control operates independently from the alarm control by the theft deterrent system (switched to the alarm sounding state from the armed state).

(1) Conditions that cause the panic alarm control to set off the panic alarm:

The panic alarm control sets off the panic alarm by pressing the PANIC switch on the wireless transmitter under the following conditions.

- The ignition switch is OFF.
- The theft deterrent system is not in the alarm sounding state (common to active arming mode and passive arming mode).
- The panic alarm control is not operating (the alarm is not set off).

(2) Conditions that cause the panic alarm control to shut off the alarm:

The panic alarm control shuts off the panic alarm when any of the following conditions is met during panic alarm operation.

- The ignition switch is turned ON.
- Either of the switches on the wireless transmitter (LOCK/UNLOCK) is pressed.
- The panic alarm ends (60 seconds have passed).
- The theft deterrent system switches to the alarm sounding state (common to active arming mode and passive arming mode). However, the alarm is still sounding, because the theft deterrent system has switched to the alarm sounding state. Conditions for canceling the panic alarm are the same as for the alarm control.

HINT:

Active arming mode: See step 2

Passive arming mode: See step 3

7. Switch to the active arming mode

HINT:

In each state of the passive arming mode, when the switch condition to the active mode (disarmed state of active arming mode → arming preparation state of active arming mode) is satisfied, the system will switch to each state of the active arming mode. In this case, the active arming mode will continue until the system switches to the disarmed state.

State of Passive Arming Mode Before Switch	State of Active Arming Mode After Switch
Disarmed state	Arming preparation state
Arming preparation state	Arming preparation state (continuing for 30 seconds)
Armed state (during entry delay time)	After alarming time has elapsed, the system will switch to the armed state
Alarm sounding state	After alarming time has elapsed, the system will switch to the armed state

BE2KD−01

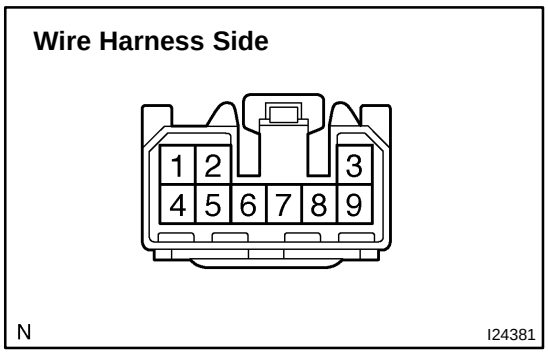

INSPECTION

1. INSPECT TOWING CONVERTER CIRCUIT

Remove the towing converter with the connector still connected and inspect the wire harness side connector from the backside, as shown in the table.

Tester Connection	Condition	Specified Condition
1 − 6	Constant	10 − 14 V
2 − 6	Turn signal switch RIGHT or hazard warning switch ON	10 − 14 V ↔ Below 1 V
	Turn signal switch RIGHT and stop light switch ON (brake pedal depressed)	10 − 14 V ↔ Below 1 V
	Turn signal switch OFF, hazard warning switch OFF and stop light switch OFF (brake pedal released)	Below 1 V
	Stop light switch ON (brake pedal depressed)	10 − 14 V ↔ Below 1 V
3 − 6	Turn signal switch RIGHT or hazard warning switch ON	10 − 14 V ↔ Below 1 V
	Turn signal switch OFF or LEFT and hazard warning switch OFF	Below 1 V
4 − 6	Turn signal switch LEFT or hazard warning switch ON	10 − 14 V ↔ Below 1 V
	Turn signal switch LEFT and stop light switch ON (brake pedal depressed)	10 − 14 V ↔ Below 1 V
	Turn signal switch OFF, hazard warning switch OFF and stop light switch OFF (brake pedal released)	Below 1 V
	Stop light switch ON (brake pedal depressed)	10 − 14 V
6 − 8	Stop light switch ON (brake pedal depressed)	10 − 14 V
	Stop light switch OFF (brake pedal released)	Below 1 V
6 − 9	Turn signal switch LEFT or hazard warning switch ON	10 − 14 V ↔ Below 1 V
	Turn signal switch OFF or RIGHT and hazard warning switch OFF	Below 1 V
6 − Body ground	Constant	Continuity

If the result is as specified, replace the towing converter.

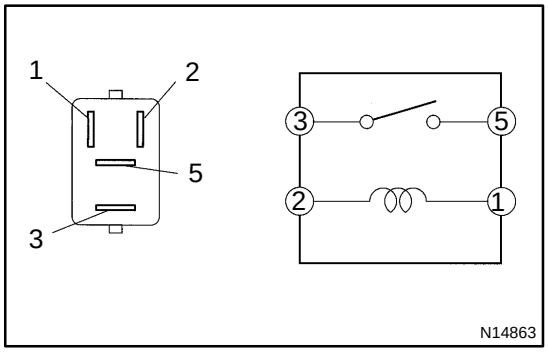

2. INSPECT TOWING TAIL RELAY CONTINUITY

Tester Connection	Specified Condition
3 − 5	No continuity
3 − 5	Continuity (When battery voltage is applied to terminals 1 and 2)

If the continuity is not as specified, replace the relay.

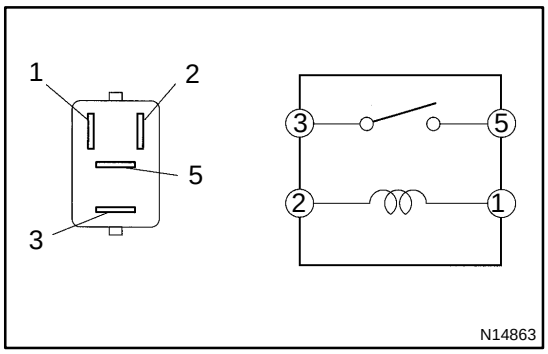

3. INSPECT BATTERY CHARGE RELAY (Marking: BATT CHARGE) CONTINUITY

Tester Connection	Specified Condition
3 − 5	No continuity
3 − 5	Continuity (When battery voltage is applied to terminals 1 and 2)

If the continuity is not as specified, replace the relay.

TRAILER TOWING (Double Cab)

BE2KC−01

LOCATION

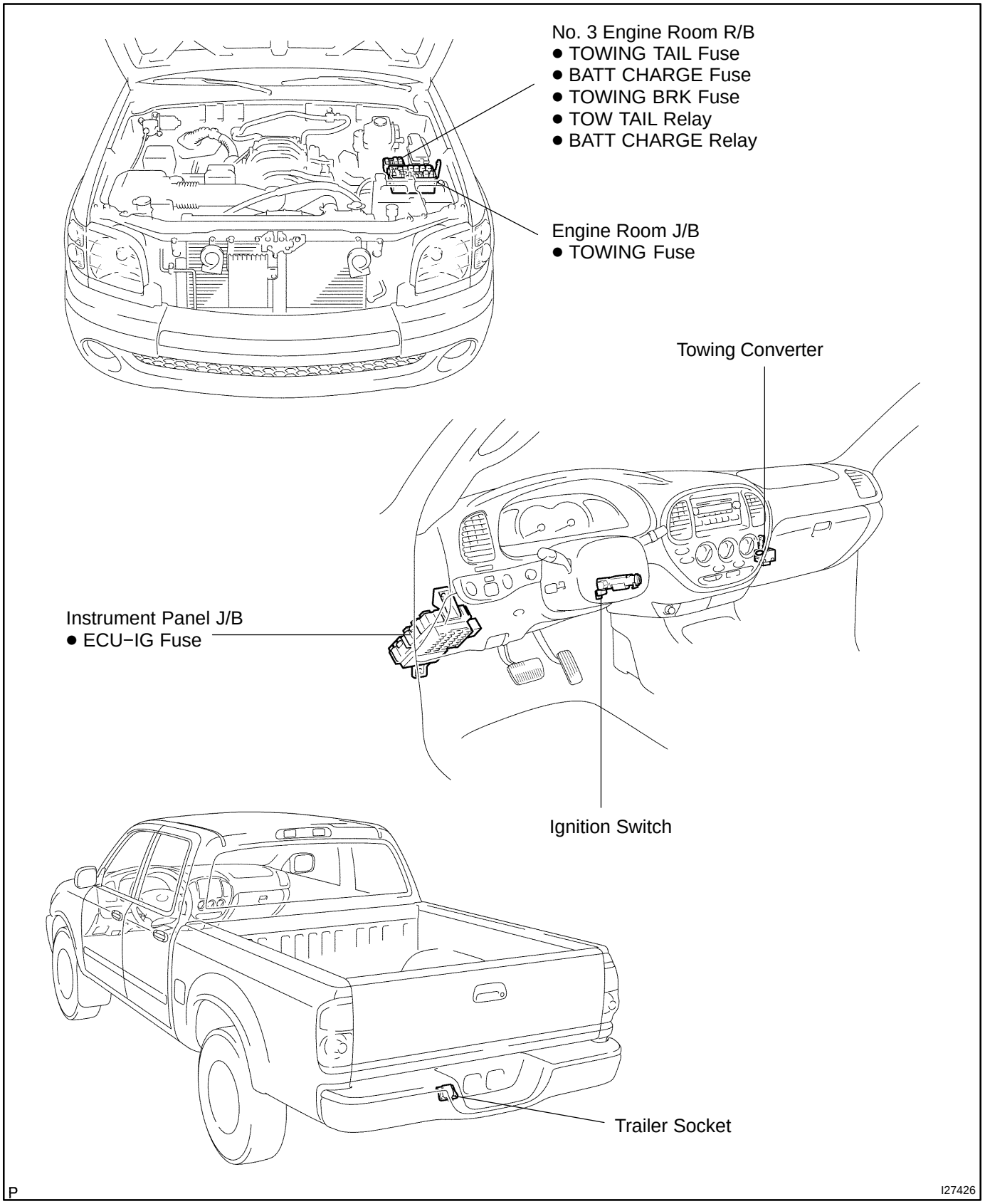

BE2KF−01

INSPECTION

1. INSPECT TOWING CONVERTER CIRCUIT

Remove the towing converter with the connector still connected and inspect the wire harness side connector from the backside, as shown in the table.

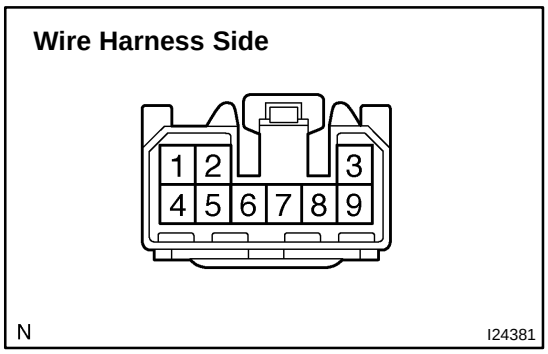

Tester Connection	Condition	Specified Condition
1 − 6	Constant	10 − 14 V
2 − 6	Turn signal switch RIGHT or hazard warning switch ON	10 − 14 V ↔ Below 1 V
	Turn signal switch RIGHT and stop light switch ON (brake pedal depressed)	10 − 14 V ↔ Below 1 V
	Turn signal switch OFF, hazard warning switch OFF and stop light switch OFF (brake pedal released)	Below 1 V
	Stop light switch ON (brake pedal depressed)	10 − 14 V ↔ Below 1 V
3 − 6	Turn signal switch RIGHT or hazard warning switch ON	10 − 14 V ↔ Below 1 V
	Turn signal switch OFF or LEFT and hazard warning switch OFF	Below 1 V
4 − 6	Turn signal switch LEFT or hazard warning switch ON	10 − 14 V ↔ Below 1 V
	Turn signal switch LEFT and stop light switch ON (brake pedal depressed)	10 − 14 V ↔ Below 1 V
	Turn signal switch OFF, hazard warning switch OFF and stop light switch OFF (brake pedal released)	Below 1 V
	Stop light switch ON (brake pedal depressed)	10 − 14 V
6 − 8	Stop light switch ON (brake pedal depressed)	10 − 14 V
	Stop light switch OFF (brake pedal released)	Below 1 V
6 − 9	Turn signal switch LEFT or hazard warning switch ON	10 − 14 V ↔ Below 1 V
	Turn signal switch OFF or RIGHT and hazard warning switch OFF	Below 1 V
6 − Body ground	Constant	Continuity

If the result is as specified, replace the towing converter.

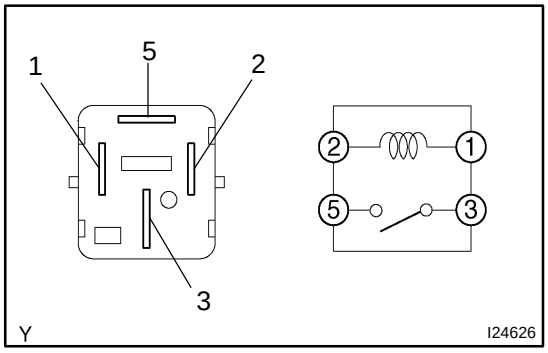

2. INSPECT TOWING TAIL RELAY (Marking: TOW TAIL) CONTINUITY

Tester Connection	Specified Condition
3 − 5	No continuity
3 − 5	Continuity (When battery voltage is applied to terminals 1 and 2)

If the continuity is not as specified, replace the relay.

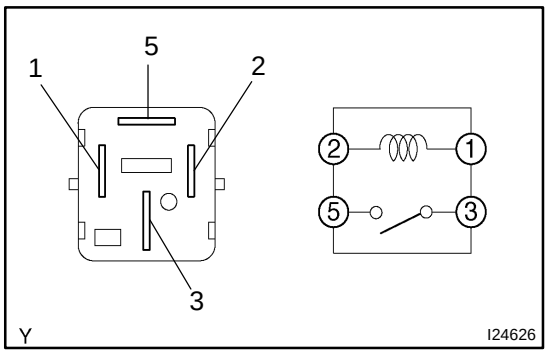

3. INSPECT SUB BATTERY RELAY (Marking: SUB BATT) CONTINUITY

Tester Connection	Specified Condition
3 − 5	No continuity
3 − 5	Continuity (When battery voltage is applied to terminals 1 and 2)

If the continuity is not as specified, replace the relay.

TRAILER TOWING (Except Double Cab)

BE2KE−01

LOCATION

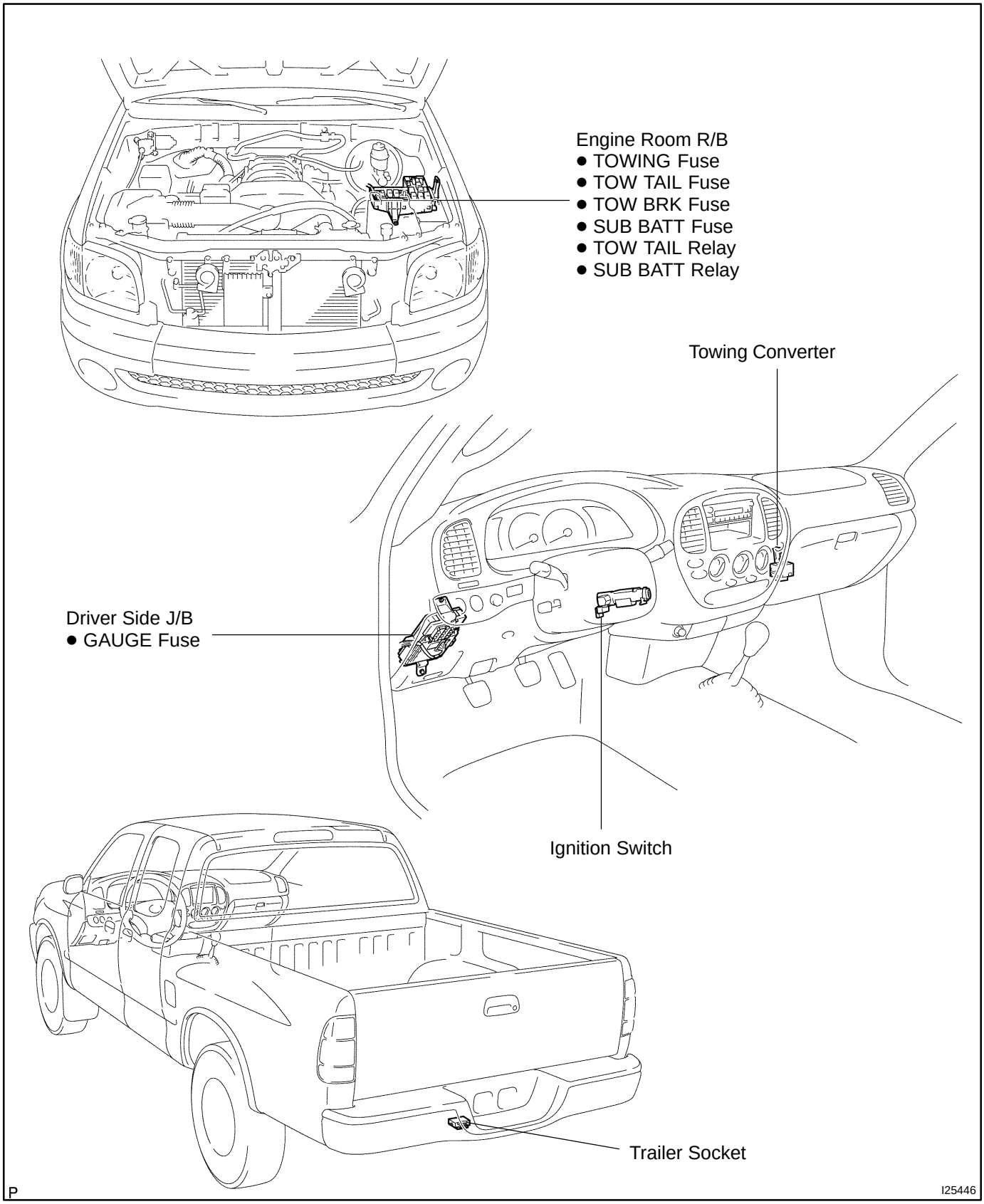

TROUBLESHOOTING (Double Cab)

BE2JW−02

PROBLEM SYMPTOMS TABLE

POWER OUTLET

Symptom	Suspected Area	See Page
Electric power source cannot be out of the power outlet.	1. AC INV Fuse	BE−24
	2. CIG Fuse	BE−24
	3. ECU−IG Fuse	BE−24
	4. RAD NO. 2 Fuse	BE−24
	5. PWR OUTLET Fuse	BE−24
	6. INVERTER Relay	BE−34
	7. ACC Relay	BE−34
	8. ACC CUT Relay	BE−34
	9. Ignition Switch	BE−37
	10. Main Switch	BE−24
	11. Voltage Inverter	BE−24
	12. Wire Harness	−

IGNITION SWITCH AND KEY UNLOCK WARNING SWITCH

This system uses the multiplex communication system. Check the diagnosis system of the multiplex communication system before you proceed with the troubleshooting.

Symptom	Suspected Area	See Page
Ignition switch cannot be turned to any position.	1. Ignition Switch	BE−37
	2. Power Source Circuit	−
Key unlock warning system does not operate.	1. DOME Fuse	BE−24
	2. ECU−B Fuse	BE−24
	3. Key Unlock Warning Switch	BE−37
	4. Door Courtesy Switch	BE−57
	5. Meter Circuit Plate	BE−82
	6. Wire Harness	DI−2391
	7. Body ECU	−

w/ Daytime running light:

HEADLIGHT AND TAILLIGHT SYSTEM

This system uses the multiplex communication system. Check diagnosis system of the multiplex communication system before you proceed with this troubleshooting.

Symptom	Suspected Area	See Page
Only one headlight does not light up.	1. HEAD (LL, RL, LH, RH) Fuse	BE−24
	2. Bulb	−
	3. Wire Harness	−
Both headlights do not light up.	1. HEAD (LL, RL, LH,RH) Fuse	BE−24
	2. HEAD Relay	BE−41
	3. DIMMER Relay	BE−41
	4. DRL NO. 4 Relay	BE−41
	5. Daytime Running Light Resistor	BE−41
	6. Light Control Switch	BE−41
	7. Bulb	−
	8. Body ECU	−
	9. Wire Harness	
Lo−beam does not operate on one side.	1. HEAD (LL, RL) Fuse	BE−24
	2. Bulb	−
	3. Wire Harness	−
Lo−beam does not operate on both sides.	1. DIMMER Relay	BE−41
	2. Headlight Dimmer Switch	BE−41
	3. Wire Harness	−

Hi−beam does not operate on one side.	1. H−LP (LH, RH) Fuse 2. Bulb 3. Wire Harness	BE−24 − −
Hi−beam does not operate on both sides.	1. DIMMER Relay 2. Headlight Dimmer Switch 3. Wire Harness	BE−41 BE−41 −
Flash does not operate.	1. Headlight Dimmer Switch 2. Bulb 3. Body ECU 4. Wire Harness	BE−41 − DI−2391 −
Headlight flickers.	1. Bulb 2. Body ECU 3. Wire Harness	− − −
Headlight is dark.	1. Bulb 2. Body ECU 3. Wire Harness	− DI−2391 −
Headlights do not light up while engine is running, light control switch is OFF and parking brake is released.	1. TAIL Fuse 2. ECU−IG Fuse 3. Parking Brake Switch 4. Body ECU 5. Generator 6. Wire Harness	BE−24 BE−24 BE−86 DI−2391 − −
Only one taillight does not light up.	1. Bulb 2. Wire Harness	− −
Taillights do not light up with light control switch in TAIL position.	1. TAIL Fuse 2. Light Control Switch 3. Body ECU 4. Bulb 5. Wire Harness	BE−24 BE−41 DI−2391 − −

w/o Daytime running light:

HEADLIGHT AND TAILLIGHT SYSTEM

This system uses the multiplex communication system. Check the diagnosis system of the multiplex communication system before you proceed with this troubleshooting.

Symptom	Suspected Area	See Page
Only one headlight does not light up.	1. HEAD (LH, RH) Fuse 2. Bulb 3. Wire Harness	BE−24 − −
Both headlights do not light up.	1. HEAD (LH, RH) Fuse 2. HEAD Relay 3. Light Control Switch 4. Bulb 5. Body ECU 6. Wire Harness	BE−24 BE−41 BE−41 − DI−2391 −
Lo−beam does not operate on one side.	1. Bulb 2. Wire Harness	− −
Lo−beam does not operate on both sides.	1. Headlight Dimmer Switch 2. Wire Harness	BE−41 −
Hi−beam does not operate on one side.	1. Bulb 2. Wire Harness	− −
Hi−beam does not operate on both sides.	1. Headlight Dimmer Switch 2. Wire Harness	BE−41 −
Flash does not operate.	1. Headlight Dimmer Switch 2. Wire Harness	BE−41 −

Headlight flickers.	1. Bulb 2. Body ECU 3. Wire Harness	− DI−2391 −
Headlight is dark.	1. Bulb 2. Body ECU 3. Wire Harness	− DI−2391 −
Only one taillight does not light up.	1. Bulb 2. Wire Harness	− −
Taillights do not light up with light control switch in TAIL position.	1. TAIL Fuse 2. Light Control Switch 3. Bulb 4. Body ECU 5. Wire Harness	BE−24 BE−41 − DI−2391 −

FOG LIGHT SYSTEM

Double cab:

This system uses the multiplex communication system. Check the diagnosis system of the multiplex communication system before you proceed with this troubleshooting.

Symptom	Suspected Area	See Page
Fog lights do not light up with light control switch in HEAD position. Headlights are normal.	1. FOG Fuse 2. FOG LIGHT Relay 3. Fog Light Switch 4. Body ECU 5. Wire Harness	BE−24 BE−49 BE−49 BE−86 −
Fog lights do not light up with light control switch in HEAD position. Headlights do not light up.	1. Other Parts* 2. Wire Harness	− −
Only one fog light does not light up.	1. Bulb 2. Wire Harness	− −

HINT:

*: Inspect the headlight system.

TURN SIGNAL LIGHT AND HAZARD WARNING LIGHT SYSTEM

Symptom	Suspected Area	See Page
Hazard warning lights and turn signal lights do not flash.	1. TURN−HAZ Fuse 2. GAUGE Fuse 3. Ignition Switch 4. Turn Signal Switch 5. Turn Signal Flasher Relay 6. Wire Harness	BE−24 BE−24 BE−37 BE−53 BE−53 −
Hazard warning lights do not flash. Turn signal lights are normal.	1. Hazard Warning Switch 2. Wire Harness	BE−53 −
Turn signal lights do not flash.	1. Turn Signal Flasher Relay 2. Wire Harness	BE−53 −
Turn signal lights do not flash on one side.	1. Turn Signal Switch 2. Wire Harness	BE−53 −
Only one bulb does not flash.	1. Bulb 2. Wire Harness	− −

INTERIOR LIGHT SYSTEM

This system uses the multiplex communication system. Check the diagnosis system of the multiplex communication system before you proceed with this troubleshooting.

Symptom	Suspected Area	See Page
All lights do not light up.	1. DOME Fuse 2. Body ECU	BE−24 DI−2391

Light does not light up when driver's door is opened.	1. Driver's Door Courtesy Switch 2. Wire Harness	BE−57 −
Light does not light up when passenger's door is opened.	1. Passenger's Door Courtesy Switch 2. Wire Harness	BE−57 −
Light does not light up when rear−right door is opened.	1. Rear−Right Door Courtesy Switch 2. Wire Harness	BE−57 −
Light does not light up when rear−left door is opened.	1. Rear−Left Door Courtesy Switch 2. Wire Harness	BE−57 −
Light does not fade out when all doors are closed.	1. Courtesy Switch 2. Wire Harness	BE−57 −
Light does not fade out immediately when all doors are locked within 15 seconds after they are closed.	1. Door Unlock Detection Switch 2. Wire Harness	BE−124 −
Personal light does not light up.	1. DOME Fuse 2. Bulb 3. Front Personal Light 4. Wire Harness	BE−24 − BE−57 −
Dome light does not light up.	1. DOME Fuse 2. Bulb 3. Doom Light 4. Wire Harness	BE−24 − BE−57 −
Vanity light does not light up.	1. DOME Fuse 2. Bulb 3. Vanity Light 4. Wire Harness	BE−24 − BE−57 −
Door courtesy light does not light up.	1. DOME Fuse 2. Bulb 3. Door Courtesy Switch 4. Wire Harness	BE−24 − BE−57 −

BACK−UP LIGHT SYSTEM

Symptom	Suspected Area	See Page
Back−up lights do not light up.	1. GAUGE Fuse 2. Ignition Switch 3. Park/neutral Position Switch 4. BACK−UP Light Relay 5. Bulb 6. Wire Harness	BE−24 BE−37 DI−1159 BE−67 − −
Back−up lights remain on.	1. Park/neutral Position Switch 2. Wire Harness	DI−1159 −
Only one light does not light up.	1. Bulb 2. Wire Harness	− −

STOP LIGHT SYSTEM

Symptom	Suspected Area	See Page
Stop lights do not light up.	1. STOP Fuse 2. Stop Light Switch 3. Wire Harness	BE−24 BE−70 −
Stop lights remain on.	1. Stop Light Switch 2. Wire Harness	BE−70 −
Only one light does not light up.	1. Bulb 2. Wire Harness	− −

CARGO LIGHT SYSTEM

Symptom	Suspected Area	See Page
Cargo light does not light up.	1. CARGO Fuse 2. Bulb 3. Cargo Light Switch 4. Body ECU 5. Wire Harness	BE−24 − BE−72 DI−2391 −

WIPER AND WASHER SYSTEM

Symptom	Suspected Area	See Page
Wipers and washer do not operate.	1. Ignition Switch 2. Wiper and Washer Switch 3. Wire Harness	BE−37 BE−76 −
Wipers do not operate.	1. WIP Fuse 2. Wiper and Washer Switch 3. Wiper Motor 4. Wire Harness	BE−24 BE−76 BE−76 −
Washer motor does not operate.	1. Wiper and Washer Switch 2. Washer Motor 3. Wire Harness	BE−76 BE−76 −
Washer fluid is not injected	Washer Hose and Nozzles	−

COMBINATION METER (Meter, Gauges and Illumination Lights)

This system uses the multiplex communication system. Check the diagnosis system of the multiplex communication system before you proceed with this troubleshooting.

Symptom	Suspected Area	See Page
Tachometer, fuel gauge and engine coolant temperature gauge do not operate.	1. GAUGE Fuse 2. Meter Circuit Plate 3. Wire Harness	BE−24 BE−82 −
Speedometer does not operate.	1. Vehicle Speed Sensor 2. Meter Circuit Plate 3. Wire Harness	BE−86 BE−82 −
Tachometer does not operate.	1. ECM 2. Meter Circuit Plate 3. Wire Harness	DI−428 BE−82 −
Fuel gauge does not operate or operates abnormally.	1. Fuel Receiver Gauge 2. Fuel Sender Gauge 3. Meter Circuit Plate 4. Wire Harness	BE−86 BE−86 BE−82 −
Engine coolant temperature gauge does not operate or operates abnormally.	1. Engine Coolant Temperature Receiver Gauge 2. Engine Coolant Temperature Sender Gauge 3. Meter Circuit Plate 4. Wire Harness	BE−86 BE−86 BE−82 −
Voltmeter does not operate.	1. Voltmeter 2. Meter Circuit Plate 3. Wire Harness	BE−86 BE−86 −
All illumination lights do not light up.	1. TAIL Fuse 2. Light Control Rheostat 3. Wire Harness	BE−24 BE−86 −
Brightness does not change even when rheostat is turned.	1. Bulb 2. Light Control Rheostat 3. Wire Harness	− BE−86 −
Only one illumination light does not light up.	1. Bulb 2. Wire Harness	− −

COMBINATION METER (Warning Lights)

Symptom	Suspected Area	See Page
Only discharge warning lights light up. Other warning lights do not light up.	1. LED 2. GAUGE Fuse 3. Meter Circuit Plate 4. Wire Harness	− BE−24 BE−82 −
Low oil pressure warning light does not light up.	1. LED 2. Low Oil Pressure Warning Switch 3. Meter Circuit Plate 4. Wire Harness	− BE−86 BE−82 −
Fuel level warning light does not light up.	1. LED 2. Fuel Level Warning Switch 3. Meter Circuit Plate 4. Wire Harness	− BE−86 BE−82 −
ABS warning light does not light up.	1. LED 2. Meter Circuit Plate 3. Skid Control ECU 4. Wire Harness	− BE−82 DI−1385 DI−1469 −
Seat belt warning light does not light up.	1. LED 2. Seat Belt Buckle Switch 3. Meter Circuit Plate 4. Wire Harness	− BE−86 BE−82 −
Discharge warning light does not light up.	1. IGN Fuse 2. LED 3. Meter Circuit Plate 4. Wire Harness 5. Generator	BE−24 − BE−82 − −
Brake warning light does not light up.	1. LED 2. Parking Brake Switch 3. Brake Fluid Level Warning Switch 4. Meter Circuit Plate 5. Skid Control ECU 6. Wire Harness	− BE−86 BE−86 BE−82 DI−1385 DI−1469 −
VSC TRAC warning light does not light up.	1. LED 2. Skid Control ECU 3. Meter Circuit Plate 4. Wire Harness	− DI−1385 DI−1469 BE−82 −
ATF temperature warning light does not light up.	1. LED 2. ATF Temperature Sensor 3. ECM 4. Meter Circuit Plate 5. Wire Harness	− DI−1166 DI−428 BE−82 −
SRS warning light does not light up.	1. LED 2. Airbag Sensor Assembly 3. Meter Circuit Plate 4. Wire Harness	− DI−2285 BE−82 −

Door open warning light does not light up.	1. DOME Fuse 2. LED 3. Door Courtesy Switch 4. Meter Circuit Plate 5. Wire Harness	BE−24 − BE−57 BE−82 −
Washer level warning light does not light up.	1. LED 2. Washer Fluid Level Warning Switch 3. Meter Circuit Plate 4. Wire Harness	− BE−86 BE−82 −

COMBINATION METER (Indicator Lights)

Symptom	Suspected Area	See Page
”4LO” indicator light does not light up.	1. LED 2. 4WD Control ECU 3. Meter Circuit 4. Integration Control Panel 5. Wire Harness	− TR−39 BE−82 AC−83 −
”4HI” indicator light does not light up.	1. LED 2. 4WD Control ECU 3. Meter Circuit Plate 4. Integration Control Panel 5. Wire Harness	− TR−39 BE−82 AC−83 −
O/D OFF indicator light does not light up.	1. LED 2. O/D Main Switch 3. ECM 4. Meter Circuit Plate 5. Wire Harness	− DI−1102 DI−1274 DI−428 BE−82 −
AUTO LSD indicator light does not light up.	1. LED 2. Skid Control ECU 3. Meter Circuit Plate 4. Wire Harness	− DI−1385 DI−1469 BE−82 −
VSC OFF indicator light does not light up.	1. LED 2. Skid Control ECU 3. Meter Circuit Plate 4. Wire Harness	− DI−1385 DI−1469 BE−82 −
SLIP indicator light does not light up.	1. LED 2. Skid Control ECU 3. Meter Circuit Plate 4. Wire Harness	− DI−1385 DI−1469 BE−82 −
Cruise control indicator light does not light up.	1. LED 2. ECM 3. Meter Circuit Plate 4. Wire Harness	− DI−428 BE−82 −
High−beam indicator light does not light up.	1. LED 2. Headlight and Taillight System 3. Meter Circuit Plate 4. Wire Harness	− BE−41 BE−82 −
Turn signal indicator light does not light up.	1. LED 2. Turn Signal and Hazard Warning System 3. Meter Circuit Plate 4. Wire Harness	− BE−53 BE−82 −

Shift indicator light does not light up.	1. LED 2. Park/neutral Position Switch 3. Meter Circuit Plate 4. Wire Harness	− DI−993 DI−1159 BE−82 −
Only one shift indicator light does not light up.	1. LED 2. Meter Circuit Plate	− BE−82
MIL does not light up.	1. LED 2. ECM 3. Meter Circuit Plate 4. Wire Harness	− DI−428 BE−82 −
OIL MAINT indicator does not light up.	1. LED 2. Resetting Procedure 3. Wire Harness	DI−428 BE−86 −
Tire pressure indicator does not light up.	1. LED 2. Skid Control ECU 3. Meter Circuit Plate 4. Wire Harness	DI−428 DI−1385 DI−1469 BE−82 −

DEFOGGER SYSTEM

Symptom	Suspected Area	See Page
Only rear window defogger system does not operate.	1. HTR Fuse 2. DWFOG Relay 3. Ignition Switch 4. Defogger Switch (in A/C Panel Switch) 5. Defogger Wire 6. Wire Harness	BE−24 BE−103 BE−37 BE−103 BE−103 −
Mirror defogger does not operate.	1. MIR HTR Fuse (E/G Room J/B) 2. MIR HTR Relay 3. Mirror Heater 4. Wire Harness	BE−24 BE−107 BE−107 −

POWER WINDOW CONTROL SYSTEM

This system uses the multiplex communication system. Check the diagnosis system of the multiplex communication system before you proceed with this troubleshooting.

Symptom	Suspected Area	See Page
Power window does not operate. Power door lock does not operate.	1. POWER NO. 1 Fuse 2. POWER NO. 2 Fuse 3. POWER NO. 3 Fuse 4. POWER NO. 4 Fuse 5. POWER MAIN Relay 6. Ignition Switch 7. Power Window Master Switch (Driver Door ECU) 8. Power Window Regulator Switch (Front Passenger Door ECU) 9. Body ECU	BE−24 BE−24 BE−24 BE−24 BE−24 BE−37 DI−2453 DI−2475 DI−2391
Power window does not operate. Power door lock is normal.	1. Power Window Master Switch (Driver Door ECU) 2. Power Window Regulator Switch (Front Passenger Door ECU) 3. Wire Harness	DI−2453 DI−2475 −
One−touch power window system does not operate.	Power Window Master Switch	DI−2453

Only one window glass does not move.	1. Power Window Master Switch (Driver Door ECU) 2. Power Window Regulator Switch (Front Passenger Door ECU) 3. Power Window Motor 4. Wire Harness	DI−2453 DI−2475 BE−109 −
Window lock system does not operate.	Power Window Master Switch	DI−2453
Key−off power window does not operate.	1. ECU−IG Fuse 2. Ignition Switch 3. Door Courtesy Switch 4. Body ECU 5. Wire Harness	BE−24 BE−37 BE−57 DI−2391 −

POWER BACK WINDOW SYSTEM

This system uses the multiplex communication system. Check the diagnosis system of the multiplex communication system before you proceed with this troubleshooting.

Symptom	Suspected Area	See Page
Power back window does not operate.	1. ECU−IG Fuse 2. BACK WINDOW Relay 3. BACK WINDOW CONTROL Relay 4. Ignition Switch 5. Power Back Window Switch 6. Power Back Window Motor 7. Body ECU	BE−24 BE−119 BE−119 BE−37 BE−119 BE−119 DI−2391

POWER DOOR LOCK CONTROL SYSTEM

This system uses the multiplex communication system. Check the diagnosis system of the multiplex communication system before you proceed with this troubleshooting.

Symptom	Suspected Area	See Page
Entire door lock system does not operate.	1. POWER NO. 1 Fuse 2. POWER NO. 2 Fuse 3. Body ECU 4. Wire Harness	BE−24 BE−24 DI−2391 −
Manual door lock/unlock switch does not operate.	1. Door Lock Control Switch (Driver Door ECU, Front Passenger Door ECU) 2. Door Unlock Detection Switch 3. Body ECU 4. Wire Harness	DI−2453 DI−2475 BE−124 DI−2391 −
Door lock/unlock key does not operate.	1. Door Key Lock and Unlock Switch 2. Body ECU 3. Wire Harness 4. Door Lock Link Disconnected	BE−124 DI−2391 − −
Key confine prevention function does not operate.	1. Key Unlock Warning Switch 2. Door Courtesy Switch 3. Body ECU 4. Wire Harness	BE−124 BE−57 DI−2391 −
Only one door lock does not operate.	1. Door Lock Motor 2. Wire Harness	BE−124 −

THEFT DETERRENT SYSTEM

Symptom	Suspected Area	See Page
Theft deterrent system operates abnormally.	TROUBLESHOOTING	DI−2297

WIRELESS DOOR LOCK CONTROL SYSTEM

This system uses the multiplex communication system. Check the diagnosis system of the multiplex communication system before you proceed with this troubleshooting.

HINT:

Troubleshooting of the wireless door lock control system is based on the premise that the door lock control system is operating normally. Accordingly, before troubleshooting the wireless door lock control system, first make certain that the door lock control system is operating normally.

Symptom	Suspected Area	See Page
Entire wireless door lock control system does not operate.	1. Transmitter 2. Body ECU 3. Wire Harness	BE−166 DI−2391 −
Wireless door lock operates, but the buzzer does not sound.	1. Wireless Door Lock Buzzer 2. Wireless Door Lock Control Receiver 3. Wire Harness	BE−159 BE−159 −

POWER SEAT CONTROL SYSTEM

Symptom	Suspected Area	See Page
Power seat does not operate.	1. POWER SEAT Fuse 2. Power Seat Switch 3. Wire Harness	BE−24 BE−184 −
Slide operation does not operate.	1. Power Seat Switch 2. Slide Motor 3. Wire Harness	BE−184 BE−184 −
Front tilt operation does not operate.	1. Power Seat Switch 2. Front Tilt Motor 3. Wire Harness	BE−184 BE−184 −
Rear lifter operation does not operate.	1. Power Seat Switch 2. Rear Lifter Motor 3. Wire Harness	BE−184 BE−184 −
Reclining operation does not operate.	1. Power Seat Switch 2. Reclining Motor 3. Wire Harness	BE−184 BE−184 −
Lumbar support operation does not operate.	1. Lumbar Support Switch 2. Lumbar Support Motor 3. Wire Harness	BE−184 BE−184 −

POWER MIRROR CONTROL SYSTEM

This system uses the multiplex communication system. Check the diagnosis system of the multiplex communication system before you proceed with this troubleshooting.

Symptom	Suspected Area	See Page
Mirror does not operate.	1. RAD NO. 2 Fuse 2. ACC CUT Relay 3. Ignition Switch 4. Mirror Switch 5. Mirror Motor 6. Wire Harness	BE−24 BE−189 BE−37 BE−189 BE−189 −
Mirror operates abnormally.	1. Mirror Switch 2. Mirror Motor 3. Wire Harness	BE−189 BE−189 −

ELECTRO CHROMIC MIRROR SYSTEM

Symptom	Suspected Area	See Page
Electro chromic mirror does not operate.	1. GAUGE Fuse 2. Electro Chromic Mirror 3. Wire Harness	BE−24 BE−189 −

SEAT HEATER SYSTEM

Symptom	Suspected Area	See Page
Seat heaters do not operate.	1. SEAT HTR Fuse 2. Seat Heater Switch	BE−24 BE−198
Driver's seat heater does not operate.	1. Driver's Seat Heater Switch 2. Seat Heater 3. Wire Harness	BE−198 BE−198 −
Passenger's seat heater does not operate.	1. Passenger's Seat Heater Switch 2. Seat Heater 3. Wire Harness	BE−198 BE−198 −
Seat heater temperature is too hot.	Seat Heater	BE−198

CLOCK SYSTEM (in A/C Control Panel)

Symptom	Suspected Area	See Page
Clock does not operate.	TROUBLESHOOTING NO. 1	BE−200
Clock loses or gains time.	TROUBLESHOOTING NO. 2	BE−200

GARAGE DOOR OPENER SYSTEM

Symptom	Suspected Area	See Page
The equipment of which code has been registered does not operate.	1. Garage Door Opener Switch 2. Wire Harness 3. *	BE−208 − −
LED does not turn on. (Even though either switch is pressed.)	1. Garage Door Opener Switch 2. Wire Harness	BE−208 −
LED does not turn on. (Only one switch is pressed.)	Garage Door Opener Switch	BE−208

*: As the GARAGE DOOR OPENER on the vehicle side seems to be normal, check the OPENER on the equipment side, of which code has been registered.

NAVIGATION SYSTEM

Symptom	Suspected Area	See Page
Navigation system operates abnormally.	TROUBLESHOOTING	DI−2766

AUDIO SYSTEM

Symptom	Suspected Area	See Page
Audio system operates abnormally.	TROUBLESHOOTING	DI−2525
Rear seat audio system operates abnormally.	TROUBLESHOOTING	DI−2636

REAR SEAT ENTERTAINMANT SYSTEM

Symptom	Suspected Area	See Page
Rear seat entertainmant system operates abnormally.	TROUBLESHOOTING	DI−2673

TRAILER TOWING

Symptom	Suspected Area	See Page
Trailer towing does not operate.	1. TOWING Fuse	BE−24
	2. TOWING TAIL Fuse	BE−24
	3. TOWING BRK Fuse	BE−24
	4. TOWING TAIL Relay	BE−210
	5. BATT CHARGE Relay	BE−210
	6. Towing Converter	BE−210
	7. Wire Harness	−

TROUBLESHOOTING (Except Double Cab)

BE2JX−02

PROBLEM SYMPTOMS TABLE

POWER OUTLET

Symptom	Suspected Area	See Page
Electric power source cannot be out of the power outlet.	1. PWR OUTLET1 Fuse	BE−29
	2. PWR OUTLET2 Fuse	BE−29
	3. ECU−B Fuse	BE−29
	4. DOME Fuse	BE−29
	5. POWER OUTLET Relay	BE−34
	6. ACC CUT Relay	BE−34
	7. Ignition Switch	BE−37
	8. Wire Harness	−

IGNITION SWITCH AND KEY UNLOCK WARNING SWITCH

Symptom	Suspected Area	See Page
Ignition switch cannot be turned to any position.	1. Ignition Switch	BE−37
	2. Power Source Circuit	−
Key unlock warning system does not operate.	1. DOME Fuse	BE−29
	2. Key Unlock Warning Switch	BE−37
	3. Door Courtesy Switch	BE−61
	4. Meter Circuit Plate	BE−82
	5. Wire Harness	−
	6. Integration Relay (Driver Side J/B)	BE−41

w/ Daytime running light:
HEADLIGHT AND TAILLIGHT SYSTEM

Symptom	Suspected Area	See Page
Only one headlight does not light up.	1. HEAD (LL, RL, LH, RH) Fuse	BE−29
	2. Bulb	−
	3. Wire Harness	−
Both headlights do not light up.	1. HEAD (LL, RL, LH,RH) Fuse	BE−29
	2. TAIL Fuse	BE−29
	3. ECU−IG Fuse	BE−29
	4. H−LP Relay	BE−41
	5. DIMMER Relay	BE−41
	6. DRL NO. 4 Relay	BE−41
	7. Daytime Running Light Resistor	BE−41
	8. Light Control Switch	BE−41
	9. Bulb	BE−41
	10. Integration Relay	BE−41
	11. Wire Harness	−
Lo−beam does not operate on one side.	1. HEAD (LL, RL) Fuse	BE−29
	2. Bulb	−
	3. Wire Harness	−
Lo−beam does not operate on both sides.	1. DIMMER Relay	BE−41
	2. Headlight Dimmer Switch	BE−41
	3. Wire Harness	−
Hi−beam does not operate on one side.	1. H−LP (LH, RH) Fuse	BE−29
	2. Bulb	−
	3. Wire Harness	−
Hi−beam does not operate on both sides.	1. DIMMER Relay	BE−41
	2. Headlight Dimmer Switch	BE−41
	3. Wire Harness	−

Flash does not operate.	1. Headlight Dimmer Switch 2. Integration Relay 3. Bulb 4. Wire Harness	BE−41 BE−41 − −
Headlight flickers.	1. Bulb 2. Integration Relay 3. Wire Harness	− BE−41 −
Headlight is dark.	1. Bulb 2. Integration Relay 3. Wire Harness	− BE−41 −
Headlights do not light up while engine is running, light control switch is OFF and parking brake is released.	1. TAIL Fuse 2. ECU−IG Fuse 3. Parking Brake Switch 4. Integration Relay 5. Generator 6. Wire Harness	BE−29 BE−29 BE−86 BE−41 − −
Only one taillight does not light up.	1. Bulb 2. Wire Harness	− −
Taillights do not light up with light control switch in TAIL position.	1. TAIL Fuse 2. Light Control Switch 3. Integration Relay 4. Bulb 5. Wire Harness	BE−29 BE−41 BE−41 − −

w/o Daytime running light:
HEADLIGHT AND TAILLIGHT SYSTEM

Symptom	Suspected Area	See Page
Only one headlight does not light up.	1. HEAD (LH, RH) Fuse 2. Bulb 3. Wire Harness	BE−29 − −
Both headlights do not light up.	1. HEAD (LH, RH) Fuse 2. H−LP Relay 3. Light Control Switch 4. Bulb 5. Integration Relay 6. Wire Harness	BE−29 BE−41 BE−41 − BE−41 −
Lo−beam does not operate on one side.	1. Bulb 2. Wire Harness	− −
Lo−beam does not operate on both sides.	1. Headlight Dimmer Switch 2. Wire Harness	BE−41 −
Hi−beam does not operate on one side.	1. Bulb 2. Wire Harness	− −
Hi−beam does not operate on both sides.	1. Headlight Dimmer Switch 2. Wire Harness	BE−41 −
Flash does not operate.	1. Headlight Dimmer Switch 2. Wire Harness	BE−41 −
Headlight flickers.	1. Bulb 2. Integration Relay 3. Wire Harness	− BE−41 −
Headlight is dark.	1. Bulb 2. Integration Relay 3. Wire Harness	− BE−41 −

Only one taillight does not light up.	1. Bulb 2. Wire Harness	− −
Taillights do not light up with light control switch in TAIL position.	1. TAIL Fuse 2. Light Control Switch 3. Integration Relay 4. Bulb 5. Wire Harness	BE−29 BE−41 BE−41 − −

FOG LIGHT SYSTEM

Symptom	Suspected Area	See Page
Fog lights do not light up with light control switch in HEAD position. Headlights are normal.	1. FOG Fuse 2. FOG Relay 3. Fog Light Switch 4. Integration Relay 5. Wire Harness	BE−29 BE−49 BE−49 BE−41 −
Fog lights do not light up with light control switch in HEAD position. Headlights do not light up.	1. Other Parts* 2. Wire Harness	− −
Only one fog light does not light up.	1. Bulb 2. Wire Harness	− −

HINT:

*: Inspect the headlight system.

TURN SIGNAL LIGHT AND HAZARD WARNING LIGHT SYSTEM

Symptom	Suspected Area	See Page
Hazard warning lights and turn signal lights do not flash.	1. TURN Fuse 2. HAZ Fuse 3. Ignition Switch 4. Turn Signal Switch 5. Turn Signal Flasher Relay 6. Wire Harness	BE−29 BE−29 BE−37 BE−53 BE−53 −
Hazard warning lights do not flash. Turn signal lights are normal.	1. Hazard Warning Switch 2. Wire Harness	BE−53 −
Turn signal lights do not flash.	1. Turn Signal Flasher Relay 2. Wire Harness	BE−53 −
Turn signal lights do not flash on one side.	1. Turn Signal Switch 2. Wire Harness	BE−53 −
Only one bulb does not flash.	1. Bulb 2. Wire Harness	− −

INTERIOR LIGHT SYSTEM

Symptom	Suspected Area	See Page
All lights do not light up.	DOME Fuse	BE−29
Light does not light up when driver's door is opened.	1. Driver's Door Courtesy Switch 2. Wire Harness	BE−61 −
Light does not light up when passenger's door is opened.	1. Passenger's Door Courtesy Switch 2. Wire Harness	BE−61 −
Light does not light up when RH access door is opened.	1. RH Access Door Courtesy Switch 2. Wire Harness	BE−61 −
Light does not light up when LH access door is opened.	1. LH Access Door Courtesy Switch 2. Wire Harness	BE−61 −
Light does not fade out when all doors are closed.	1. Courtesy Switch 2. Wire Harness	BE−61 −
Light does not fade out when all doors are locked within 15 seconds after they are closed.	1. Door Unlock Detection Switch 2. Wire Harness	BE−128 −

Personal light does not light up.	1. DOME Fuse 2. Bulb 3. Front Personal Light 4. Wire Harness	BE−29 − BE−128 −
Vanity light does not light up.	1. DOME Fuse 2. Bulb 3. Vanity Light 4. Wire Harness	BE−29 − BE−128 −
Door courtesy light does not light up.	1. DOME Fuse 2. Bulb 3. Door Courtesy Switch 4. Wire Harness	BE−29 − BE−128 −

BACK−UP LIGHT SYSTEM

Symptom	Suspected Area	See Page
Back−up lights do not light up.	1. GAUGE Fuse 2. Bulb 3. Ignition Switch 4. Back−up Light Switch (M/T) 5. Park/neutral Position Switch (A/T) 6. BACK−UP Light Relay (A/T) 7. Wire Harness	BE−29 − BE−37 BE−67 BE−67 BE−67 −
Back−up lights remain on.	1. Back−up Light Switch (M/T) 2. Park/neutral Position Switch (A/T) 3. Wire Harness	BE−67 BE−67 −
Only one light does not light up.	1. Bulb 2. Wire Harness	− −

STOP LIGHT SYSTEM

Symptom	Suspected Area	See Page
Stop lights do not light up.	1. STOP Fuse 2. Stop Light Switch 3. Wire Harness	BE−29 BE−70 −
Stop lights remain on.	1. Stop Light Switch 2. Wire Harness	BE−70 −
Only one light does not light up.	1. Bulb 2. Wire Harness	− −

CARGO LIGHT SYSTEM

Symptom	Suspected Area	See Page
Cargo light does not light up.	1. CARGO LP Fuse 2. Bulb 3. Cargo Light Switch 4. Integration Relay 5. Wire Harness	BE−29 − BE−72 BE−128 −

WIPER AND WASHER SYSTEM

Symptom	Suspected Area	See Page
Wipers and washer do not operate.	1. WIP Fuse 2. Ignition Switch 3. Wiper and Washer Switch 4. Wire Harness	BE−29 BE−37 BE−76 −
Wipers do not operate.	1. Wiper and Washer Switch 2. Wiper Motor 3. Wire Harness	BE−76 BE−76 −

Washer motor does not operate.	1. Wiper and Washer Switch 2. Washer Motor 3. Wire Harness	BE−76 BE−76 −
Washer fluid is not injected	Washer Hose and Nozzles	−

COMBINATION METER (Meter, Gauges and Illumination Lights)

Symptom	Suspected Area	See Page
Tachometer, fuel gauge and engine coolant temperature gauge do not operate.	1. GAUGE Fuse 2. Meter Circuit Plate 3. Wire Harness	BE−29 BE−82 −
Speedometer does not operate.	1. Vehicle Speed Sensor 2. Meter Circuit Plate 3. Wire Harness	BE−86 BE−86 −
Tachometer does not operate.	1. Igniter (1GR−FE) 2. ECM (2UZ−FE) 3. Meter Circuit Plate 4. Wire Harness	− − BE−86 −
Fuel gauge does not operate or operates abnormally.	1. Fuel Receiver Gauge 2. Fuel Sender Gauge 3. Meter Circuit Plate 4. Wire Harness	BE−86 BE−86 BE−82 −
Engine coolant temperature gauge does not operate or operates abnormally.	1. Engine Coolant Temperature Receiver Gauge 2. Engine Coolant Temperature Sender Gauge 3. Meter Circuit Plate 4. Wire Harness	BE−86 BE−86 BE−82 −
Voltmeter does not operate.	1. Voltmeter 2. Meter Circuit Plate 3. Wire Harness	BE−86 BE−82 −
All illumination lights do not light up.	1. TAIL Fuse 2. Light Control Rheostat 3. Integration Relay 4. Wire Harness	BE−29 BE−86 BE−41 −
Brightness does not change even when rheostat is turned.	1. Bulb 2. Light Control Rheostat 3. Wire Harness	− BE−86 −
Only one illumination light does not light up.	1. Bulb 2. Wire Harness	− −

COMBINATION METER (Warning Lights)

Symptom	Suspected Area	See Page
Only discharge warning lights light up. Other warning lights do not light up.	1. LED 2. GAUGE Fuse 3. Meter Circuit Plate 4. Wire Harness	− BE−29 BE−82 −
Low oil pressure warning light does not light up.	1. LED 2. Low Oil Pressure Warning Switch 3. Meter Circuit Plate 4. Wire Harness	− BE−86 BE−82 −
Fuel level warning light does not light up.	1. LED 2. Fuel Level Warning Switch 3. Meter Circuit Plate 4. Wire Harness	− BE−86 BE−82 −

ABS warning light does not light up.	1. LED 2. Meter Circuit Plate 3. Skid Control ECU 4. Wire Harness	− BE−82 DI−1385 DI−1469 −
Seat belt warning light does not light up.	1. LED 2. Seat Belt Buckle Switch 3. Meter Circuit Plate 4. Wire Harness	− BE−86 BE−82 −
Discharge warning light does not light up.	1. IGN Fuse 2. LED 3. Meter Circuit Plate 4. Wire Harness 5. Generator	BE−29 − BE−82 − −
Brake warning light does not light up.	1. LED 2. Parking Brake Switch 3. Brake Fluid Level Warning Switch 4. Meter Circuit Plate 5. Skid Control ECU 6. Wire Harness	− BE−86 BE−86 BE−82 DI−1385 DI−1469 −
VSC TRAC warning light does not light up.	1. LED 2. Skid Control ECU 3. Meter Circuit Plate 4. Wire Harness	− DI−1385 DI−1469 BE−82 −
ATF temperature warning light does not light up.	1. LED 2. ATF Temperature Sensor 3. ECM 4. Meter Circuit Plate 5. Wire Harness	− DI−999 DI−1166 − BE−82 −
SRS warning light does not light up.	1. LED 2. Airbag Sensor Assembly 3. Meter Circuit Plate 4. Wire Harness	− DI−1827 BE−82 −
Door open warning light does not light up.	1. DOME Fuse 2. LED 3. Door Courtesy Switch 4. Meter Circuit Plate 5. Wire Harness	BE−29 − BE−61 BE−82 −
Washer level warning light does not light up.	1. LED 2. Washer Fluid Level Warning Switch 3. Meter Circuit Plate 4. Wire Harness	− BE−86 BE−82 −

COMBINATION METER (Indicator Lights)

Symptom	Suspected Area	See Page
”4LO” indicator light does not light up.	1. LED 2. 4WD Control ECU (2UZ−FE) 3. Meter Circuit 4. Integration Control Panel 5. Wire Harness	− TR−39 BE−82 AC−83 −

”4HI/4WD” indicator light does not light up.	1. LED 2. A.D.D. Actuator (1GR−FE) 3. 4WD Control ECU (2UZ−FE) 4. Meter Circuit Plate 5. Integration Control Panel 6. Wire Harness	− TR−39 TR−39 BE−82 AC−83 −
O/D OFF indicator light does not light up.	1. LED 2. O/D Main Switch 3. ECM 4. Meter Circuit Plate 5. Wire Harness	− DI−1102 DI−1274 DI−9 DI−428 BE−82 −
AUTO LSD indicator light does not light up.	1. LED 2. Skid Control ECU 3. Meter Circuit Plate 4. Wire Harness	− DI−1385 DI−1469 BE−82 −
VSC OFF indicator light does not light up.	1. LED 2. Skid Control ECU 3. Meter Circuit Plate 4. Wire Harness	− DI−1385 DI−1469 BE−82 −
SLIP indicator light does not light up.	1. LED 2. Skid Control ECU 3. Meter Circuit Plate 4. Wire Harness	− DI−1385 DI−1469 BE−82 −
Cruise control indicator light does not light up.	1. LED 2. ECM 3. Meter Circuit Plate 4. Wire Harness	− DI−9 DI−428 BE−82 −
High−beam indicator light does not light up.	1. LED 2. Headlight and Taillight System 3. Meter Circuit Plate 4. Wire Harness	− BE−41 BE−82 −
Turn signal indicator light does not light up.	1. LED 2. Turn Signal and Hazard Warning System 3. Meter Circuit Plate 4. Wire Harness	− BE−53 BE−82 −
Shift indicator light does not light up.	1. LED 2. Park/Neutral Position Switch 3. Meter Circuit Plate 4. Wire Harness	− DI−993 DI−1159 BE−82 −
Only one shift indicator light does not light up.	1. LED 2. Meter Circuit Plate	− BE−82
MIL does not light up.	1. LED 2. ECM 3. Meter Circuit Plate 4. Wire Harness	− DI−9 DI−428 BE−82 −

OIL MAINT indicator does not light up.	1. LED 2. Resetting Procedure 3. Wire Harness	DI−428 BE−86 −
Tire pressure indicator does not light up.	1. LED 2. Skid Control ECU 3. Meter Circuit Plate 4. Wire Harness	DI−428 DI−1385 DI−1469 BE−82 −

MIRROR HEATER SYSTEM

Symptom	Suspected Area	See Page
Mirror heater system does not operate.	1. GAUGE Fuse 2. Mirror Heater Switch 3. Ignition Switch 4. MIR HTR Relay 5. Wire Harness	BE−29 BE−107 BE−37 BE−107 −

POWER WINDOW CONTROL SYSTEM

Symptom	Suspected Area	See Page
Power window does not operate. Power door lock does not operate.	1. ECU−IG Fuse 2. POWER Relay 3. Ignition Switch 4. Integration Relay	BE−29 BE−114 BE−37 BE−128
Power window does not operate. Power door lock is normal.	1. Power Window Master Switch 2. Wire Harness	BE−114 −
One−touch power window system does not operate.	Power Window Master Switch	BE−114
Only one window does not move.	1. Power Window Master Switch 2. Power Window Control Switch 3. Power Window Motor 4. Wire Harness	BE−114 BE−114 BE−114 −
Window lock system does not operate.	Power Window Master Switch	BE−114
Key−off power window does not operate.	1. ECU−IG Fuse 2. POWER Relay 3. Ignition Switch 4. Door Courtesy Switch 5. Integration Relay 6. Wire Harness	BE−29 BE−114 BE−37 BE−61 BE−128 −

POWER SLIDE BACK WINDOW SYSTEM

Symptom	Suspected Area	See Page
Power slide back window does not operate. Power window does not operate.	1. ECU−IG Fuse 2. POWER Relay 3. Ignition Switch 4. Integration Relay	BE−114 BE−114 BE−37 BE−128
Power slide back window does not operate. Power window is normal.	1. Power Slide Back Window Switch 2. Power Slide Back Window Motor 3. Wire Harness	BE−122 BE−122 −

POWER DOOR LOCK CONTROL SYSTEM

Symptom	Suspected Area	See Page
Entire door lock system does not operate.	1. ECU−IG Fuse 2. POWER Fuse 3. Integration Relay 4. Wire Harness	BE−29 BE−29 BE−128 −

Manual door lock/unlock switch does not operate.	1. Door Lock Control Switch 2. Door Unlock Detection Switch 3. Integration Relay 4. Wire Harness	BE−128 BE−128 BE−128 −
Door lock/unlock key does not operate.	1. Door Key Lock and Unlock Switch 2. Integration Relay 3. Wire Harness 4. Door Lock Link Disconnected	BE−128 BE−128 − −
Key confine prevention function does not operate.	1. Key Unlock Warning Switch 2. Door Courtesy Switch 3. Integration Relay 4. Wire Harness	BE−37 BE−61 BE−180 −
Only one door lock does not operate.	1. Door Lock Motor 2. Wire Harness	BE−180 −

TOYOTA VEHICLE INTRUSION PROTECTION (TVIP) SYSTEM

Symptom	Suspected Area	See Page
TOYOTA vehicle intrusion protection (TVIP) system operates abnormally.	TROUBLESHOOTING	DI−2297

WIRELESS DOOR LOCK CONTROL SYSTEM

HINT:

Troubleshooting of the wireless door lock control system is based on the premise that the door lock control system is operating normally. Accordingly, before troubleshooting the wireless door lock control system, first make certain that the door lock control system is operating normally.

Symptom	Suspected Area	See Page
Entire wireless door lock control system does not operate.	1. Transmitter 2. TVIP ECU 3. Wire Harness	BE−180 DI−2297 −
Wireless door lock operates, but the buzzer does not sound.	1. TVIP Buzzer 2. TVIP ECU 3. Wire Harness	 DI−2297 −

POWER SEAT CONTROL SYSTEM

Symptom	Suspected Area	See Page
Power seat does not operate.	1. POWER Fuse 2. Power Seat Swtich 3. Wire Harness	BE−114 BE−184 −
Slide operation does not operate.	1. Power Seat Switch 2. Slide Motor 3. Wire Harness	BE−184 BE−184 −
Front tilt operation does not operate.	1. Power Seat Switch 2. Front Tilt Motor 3. Wire Harness	BE−184 BE−184 −
Rear lifter operation does not operate.	1. Power Seat Switch 2. Rear Lifter Motor 3. Wire Harness	BE−184 BE−184 −
Reclining operation does not operate.	1. Power Seat Switch 2. Reclining Motor 3. Wire Harness	BE−184 BE−184 −
Lumbar support operation does not operate.	1. Lumbar Support Switch 2. Lumbar Support Motor 3. Wire Harness	BE−184 BE−184 −

POWER MIRROR CONTROL SYSTEM

Symptom	Suspected Area	See Page
Mirror does not operate.	1. ACC Fuse 2. ECU−B Fuse (2UZ−FE) 3. ACC CUT Relay (2UZ−FE) 4. Ignition Switch 5. Mirror Switch 6. Mirror Motor 7. ECM (2UZ−FE) 8. Wire Harness	BE−114 BE−114 BE−192 BE−37 BE−192 BE−192 DI−428 −
Mirror operates abnormally.	1. Mirror Switch 2. Mirror Motor 3. Wire Harness	BE−192 BE−192 −

ELECTRO CHROMIC MIRROR SYSTEM

Symptom	Suspected Area	See Page
Electro chromic mirror does not operate.	1. GAUGE Fuse 2. Electro Chromic Mirror 3. Wire Harness	BE−24 BE−189 −

CLOCK SYSTEM (in A/C Control Panel)

Symptom	Suspected Area	See Page
Clock does not operate.	TROUBLESHOOTING NO. 1	BE−200
Clock loses or gains time.	TROUBLESHOOTING NO. 2	BE−200

NAVIGATION SYSTEM

Symptom	Suspected Area	See Page
Navigation system operates abnormally.	TROUBLESHOOTING	DI−2766

AUDIO SYSTEM

Symptom	Suspected Area	See Page
Audio system operates abnormally.	TROUBLESHOOTING	DI−2525
Rear seat audio system operates abnormally.	TROUBLESHOOTING	DI−2636

REAR SEAT ENTERTAINMANT SYSTEM

Symptom	Suspected Area	See Page
Rear seat entertainmant system operates abnormally.	TROUBLESHOOTING	DI−2673

TRAILER TOWING

Symptom	Suspected Area	See Page
Trailer towing does not operate.	1. TOWING Fuse 2. TOWING TAIL Fuse 3. TOWING BRK Fuse 4. GAUGE Fuse 5. TOW TAIL Relay 6. SUB BATT Relay 7. Towing Converter 8. Wire Harness	BE−29 BE−29 BE−29 BE−29 BE−213 BE−213 BE−213 −

BE2K7−01

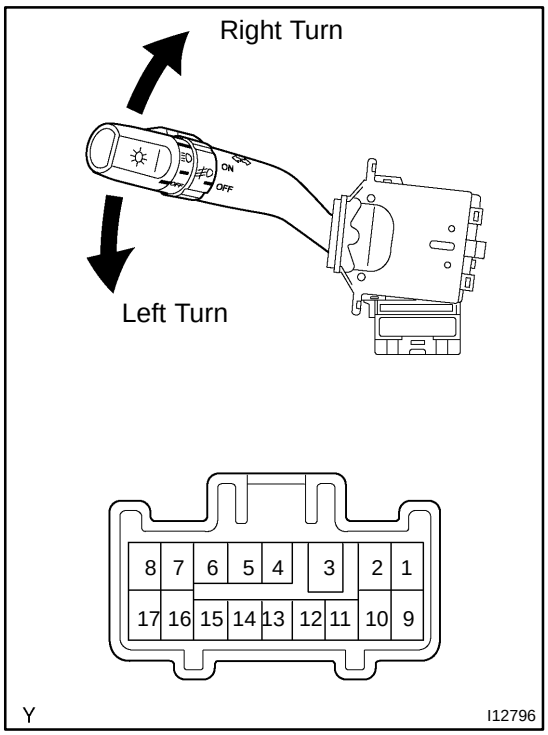

INSPECTION

1. INSPECT TURN SIGNAL SWITCH CONTINUITY

Switch Position	Tester Connection	Specified Condition
Left turn	1 − 2	Continuity
Original	1 −2, 2 − 3	No continuity
Right turn	2 − 3	Continuity

If the continuity is not as specified, replace the switch.

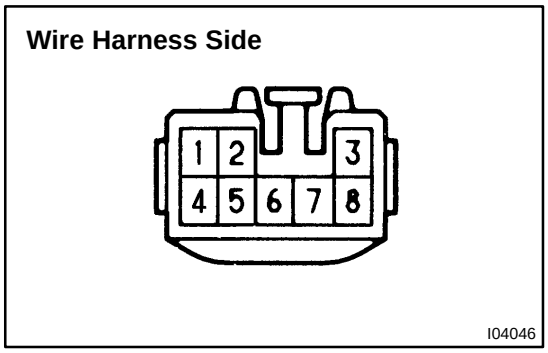

2. INSPECT TURN SIGNAL FLASHER RELAY CIRCUIT

Disconnect the connector from the turn signal flasher and inspect the connector on the wire harness side, as shown in the table.

Tester Connection	Condition	Specified Condition
1 − Body ground	Ignition switch LOCK or ACC	Below 1 V
1 − Body ground	Ignition switch ON	10 − 14 V
2 − Body ground	Constant	Continuity
3 − Body ground	Constant	Continuity
4 − Body ground	Constant	10 − 14 V
5 − Body ground	Turn signal switch RIGHT or OFF	No Continuity
5 − Body ground	Turn signal switch LEFT	Continuity
6 − Body ground	Turn signal switch LEFT or OFF	No Continuity
6 − Body ground	Turn signal switch RIGHT	Continuity
7 − Body ground	Constant	Continuity
8 − Body ground	Hazard warning switch OFF	No Continuity
8 − Body ground	Hazard warning switch ON	Continuity

If the result is as specified, replace the flasher.

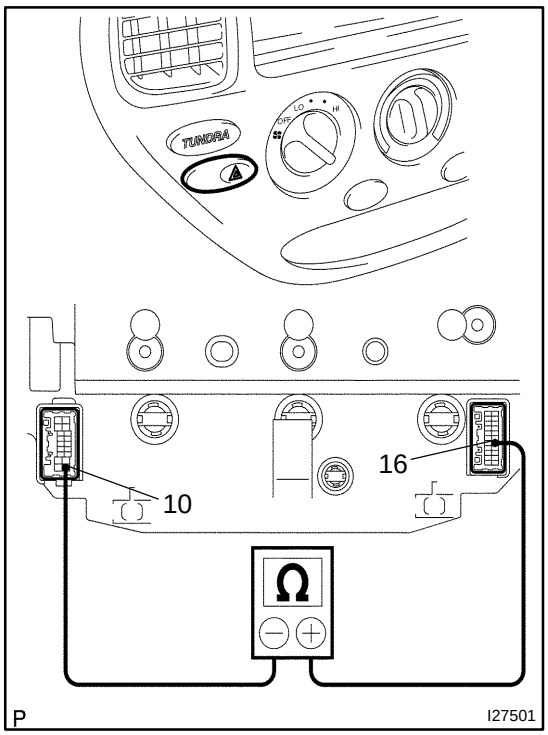

3. Double cab:
INSPECT HAZARD WARNING SWITCH CONTINUITY

(a) Remove the integration control panel.
(b) Check that the continuity exists between terminal 16 and terminal 10 with the switch ON.
(c) Check that no continuity exists between terminal 16 and terminal 10 with the switch OFF.

If the continuity is not as specified, replace the panel.

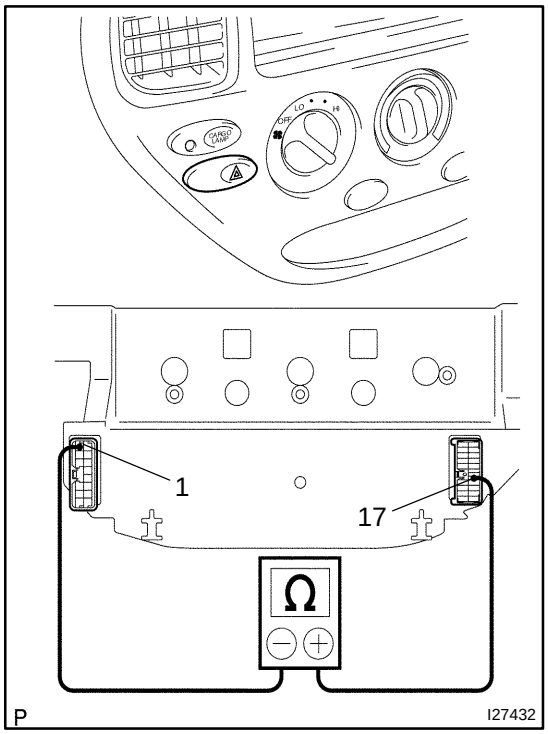

4. Except double cab:
INSPECT HAZARD WARNING SWITCH CONTINUITY

(a) Remove the integration control panel.
(b) Check that the continuity exists between terminal 17 and terminal 1 with the switch ON.
(c) Check that no continuity exists between terminal 17 and terminal 1 with the switch OFF.

If the continuity is not as specified, replace the panel.

TURN SIGNAL AND HAZARD WARNING SYSTEM

BE2K6−01

LOCATION

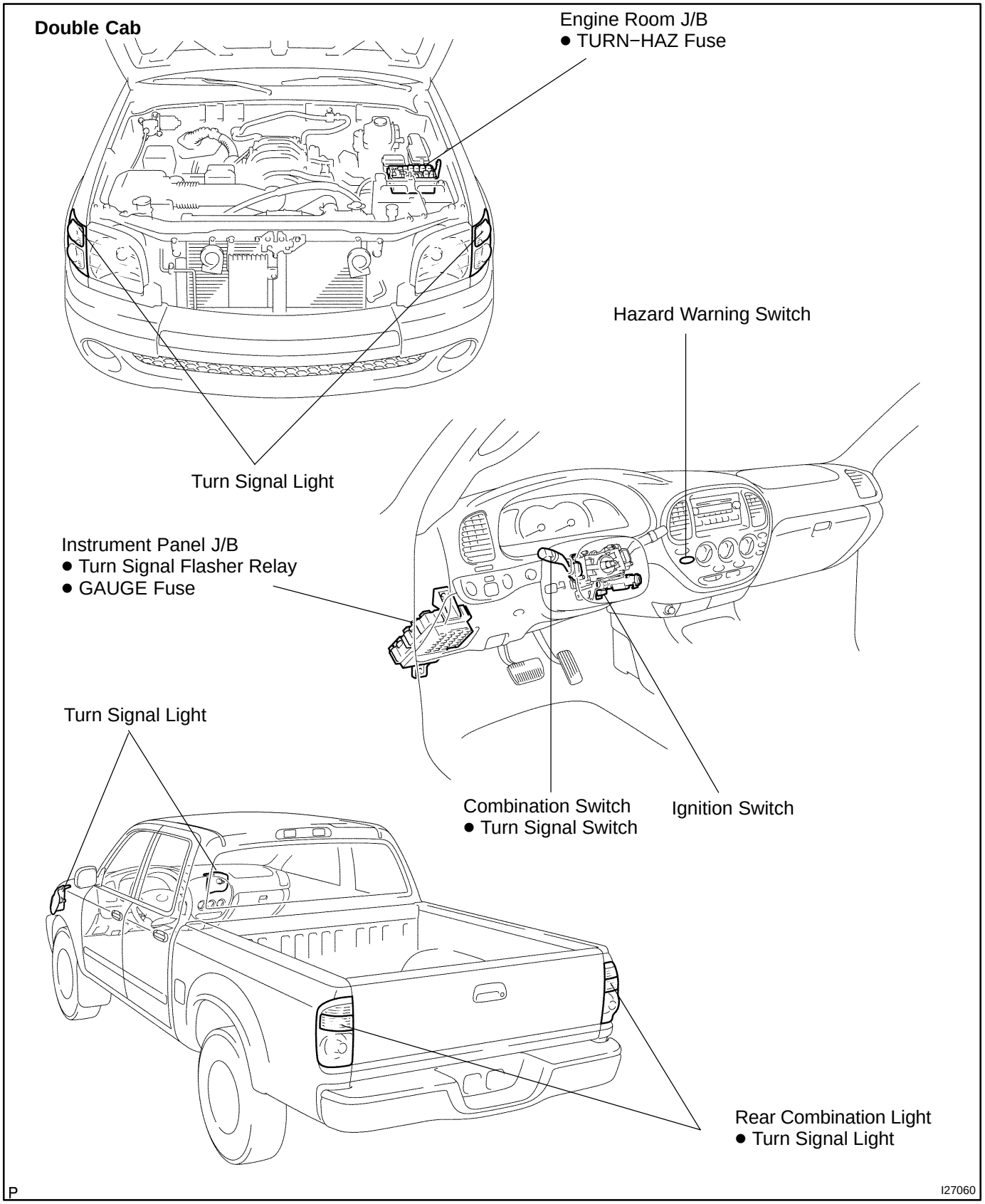

Except Double Cab

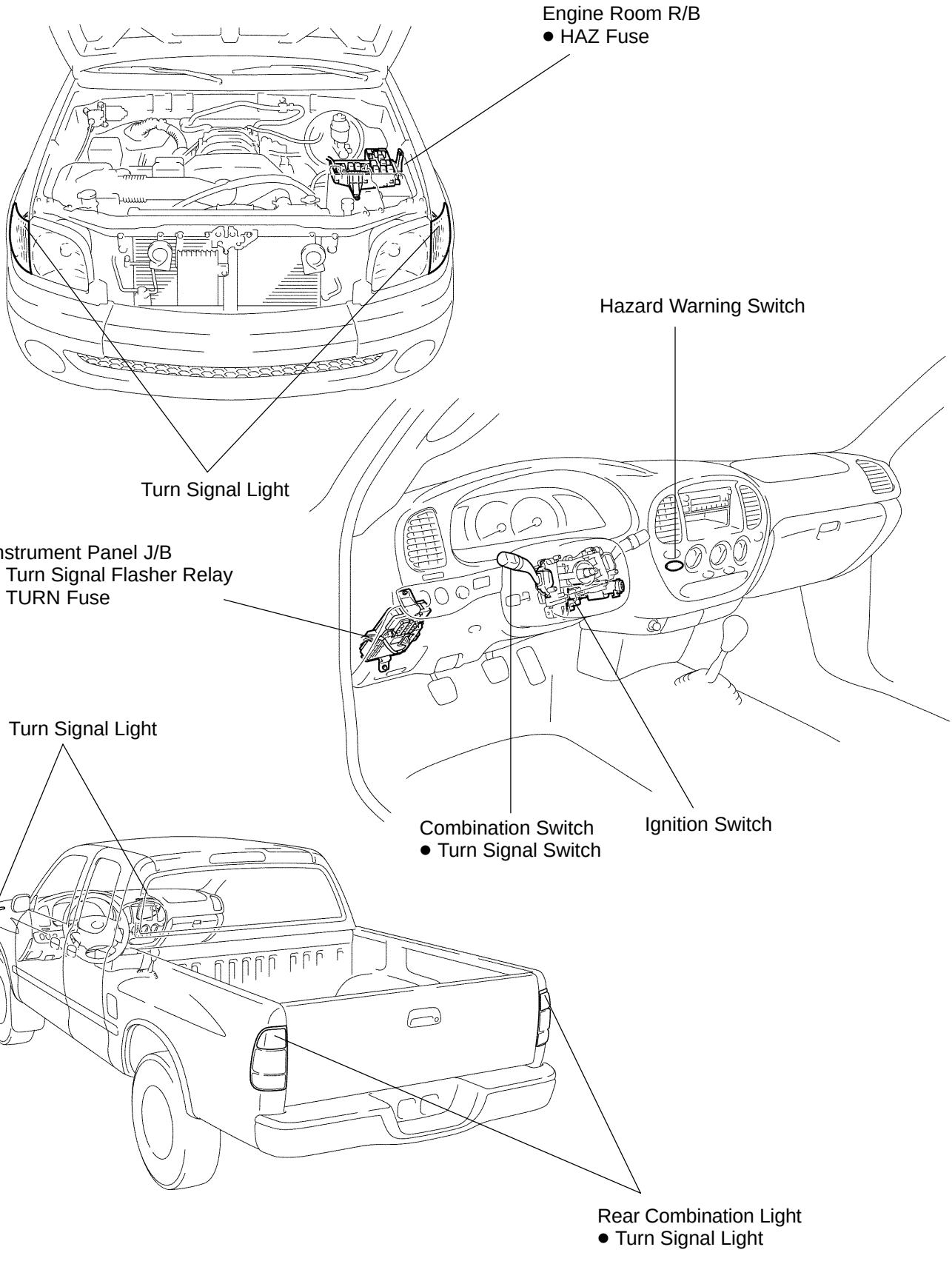

TOYOTA VEHICLE INTRUSION PROTECTION SYSTEM (Except Double Cab)

BE2KY−01

ON−VEHICLE INSPECTION

1. OUTLINE OF TOYOTA VEHICLE INTRUSION PROTECTION (TVIP) SYSTEM

(a) When the TOYOTA Vehicle Intrusion Protection (TVIP) system detects that the vehicle is being tampered with, the system sets off the alarm, causing the horns to sound and the lights to light up or flash in order to alert people around the vehicle to the theft.

(b) The TVIP system has 2 modes; one is the active arming mode that is an initially set mode and another is the passive arming mode that can be switched ON/OFF by the specified method (see step 4).

(c) Each mode (active and passive) has 4 states; the disarmed state, the arming preparation state, the armed state and the alarm sounding state.

(1) Disarmed state:
- The alarm function is not operating.
- The TVIP system is not operating.

(2) Arming preparation state:
- The TVIP system is not operating.

(3) Armed state:
- The TVIP system is operating.

(4) Alarm sounding state:
When the TVIP system detects that the vehicle is being tampered with while in the armed state, the system causes the horns to sound and the lights to light up or flash in order to alert people around the vehicle to the theft.

Refer to table below for alarm method and time:

Alarming method	Headlight	Flashing at a cycle of approx. 0.4 seconds
	Taillight	Flashing at a cycle of approx. 0.4 seconds
	Interior light	Illuminating (turn on)
	Vehicle horn	Sounding at a cycle of approx. 0.4 seconds
Alarming time	Approx. 60 seconds	

HINT:
If any of the doors are unlocked with no key in the ignition key cylinder during the alarm sounding state, a forced door lock signal will be output (see step 5).

2. ACTIVE ARMING MODE

- Active arming mode starts the alarm control immediately after the doors are locked.

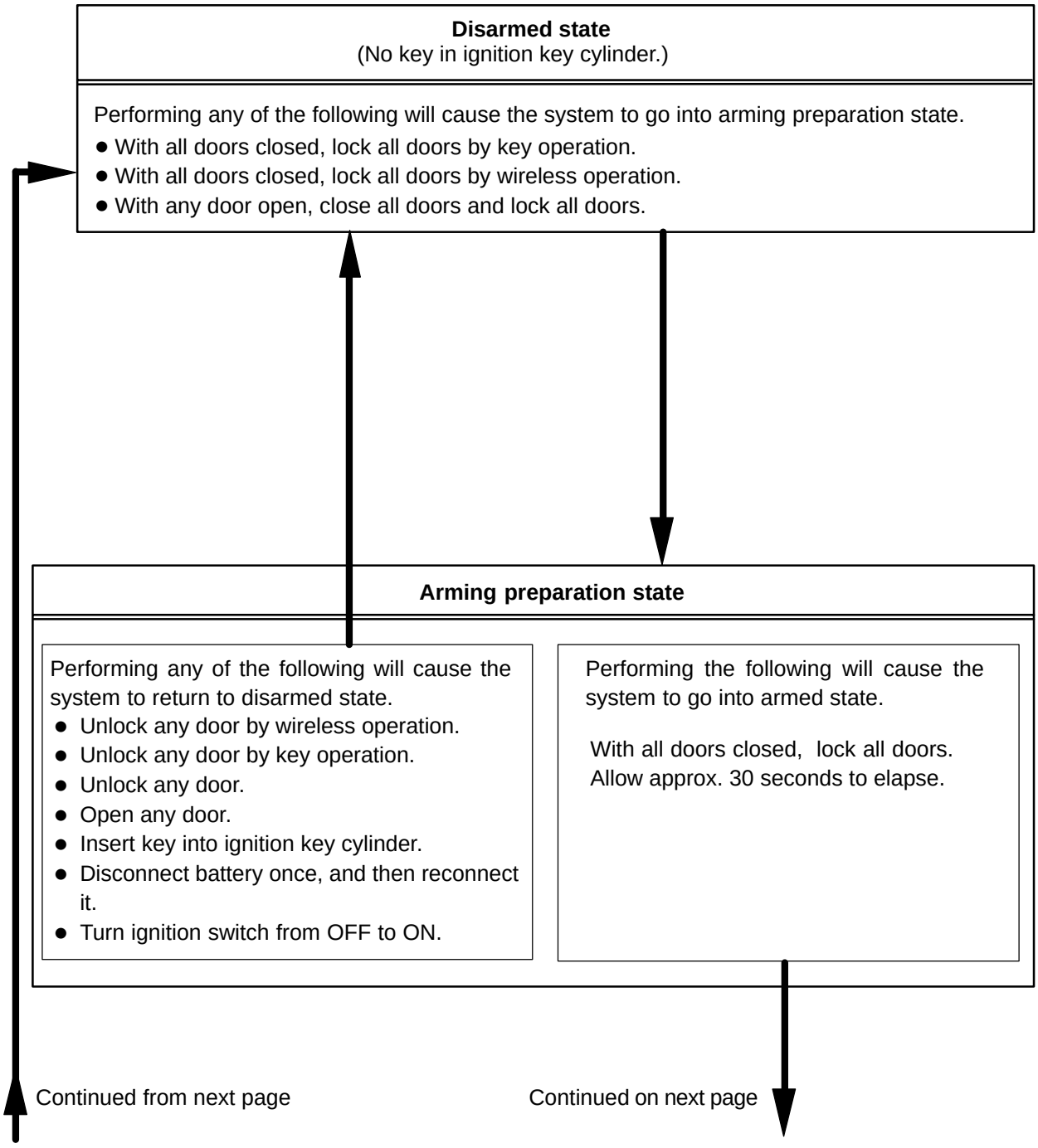

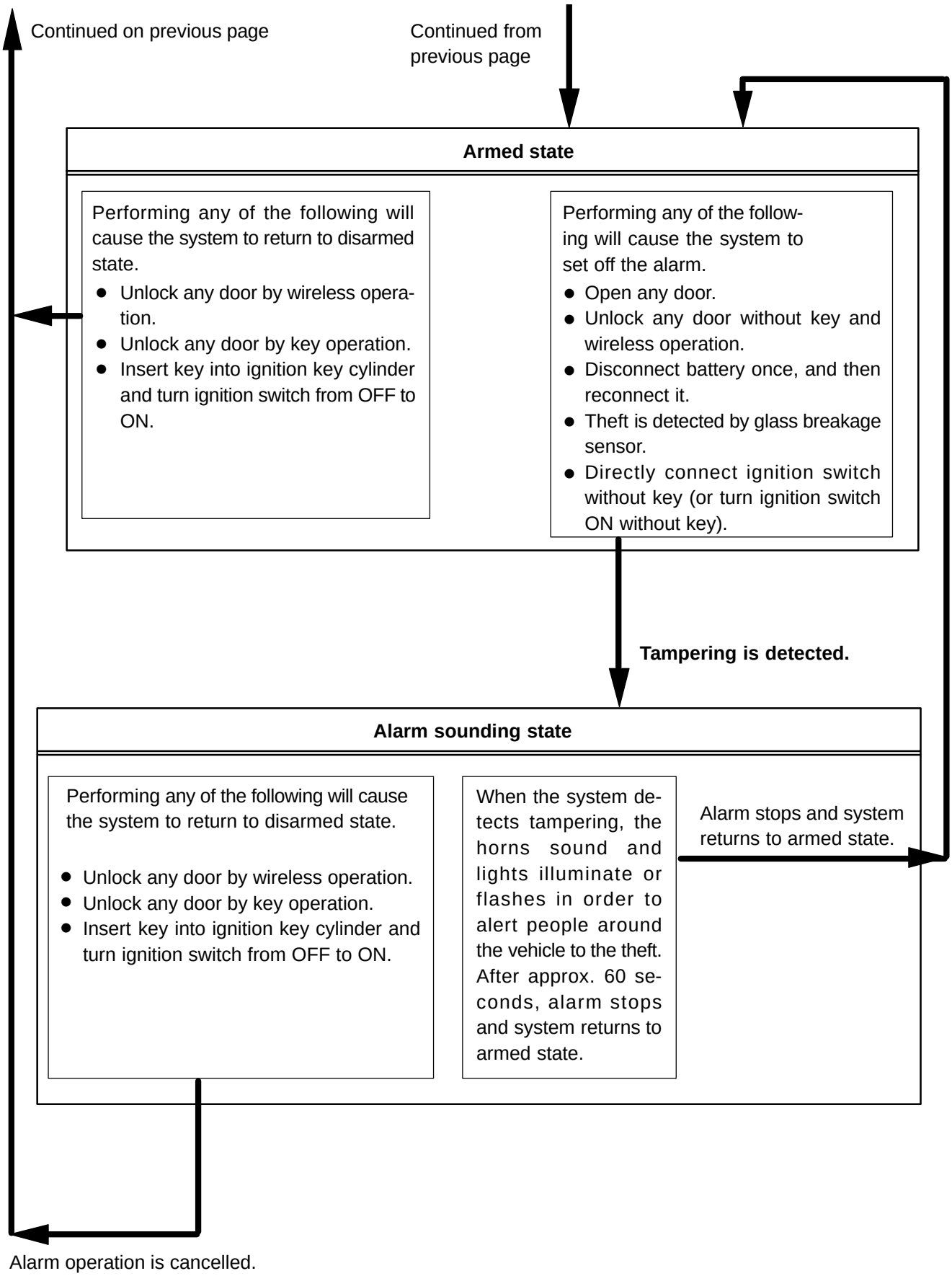
Continued on previous page
Continued from previous page
Armed state
Performing any of the following will cause the system to return to disarmed state.
● Unlock any door by wireless operation.
● Unlock any door by key operation.
● Insert key into ignition key cylinder and turn ignition switch from OFF to ON.
Performing any of the following will cause the system to set off the alarm.
● Open any door.
● Unlock any door without key and wireless operation.
● Disconnect battery once, and then reconnect it.
● Theft is detected by glass breakage sensor.
● Directly connect ignition switch without key (or turn ignition switch ON without key).
Tampering is detected.
Alarm sounding state
Performing any of the following will cause the system to return to disarmed state.
● Unlock any door by wireless operation.
● Unlock any door by key operation.
● Insert key into ignition key cylinder and turn ignition switch from OFF to ON.
When the system detects tampering, the horns sound and lights illuminate or flashes in order to alert people around the vehicle to the theft. After approx. 60 seconds, alarm stops and system returns to armed state.
Alarm stops and system returns to armed state.
Alarm operation is cancelled.

3. PASSIVE ARMING MODE

- Passive arming mode can be switched according to the specified method (see step 4).
- The alarm is initially set (when shipped from factory) to active arming mode (not passive arming mode).
- During passive arming mode, the TVIP system goes into the armed state even if the doors are not locked.
- Passive arming mode starts the alarm control after the key is removed from the ignition key cylinder and the doors are closed.
- Detecting that the doors are unlocked does not set off the alarm during passive arming mode.
- A forced door lock signal is not output during passive arming mode (see step 4).
- When the TVIP system detects that the doors are opened during passive arming mode, the alarm is not set off immediately because an entry delay time is set.
- If any of the following conditions is met during passive arming mode, the TVIP system will switch to active arming mode.
  - With all doors closed, lock all doors by key operation.
  - With all doors closed, lock all doors by wireless operation.
  - With any door open, lock all doors and close all doors.

HINT:
*1: Disarmed state (1) is the normal disarmed state.
*2: Disarmed state (2) is set from either the disarmed state (1) or the arming preparation state.

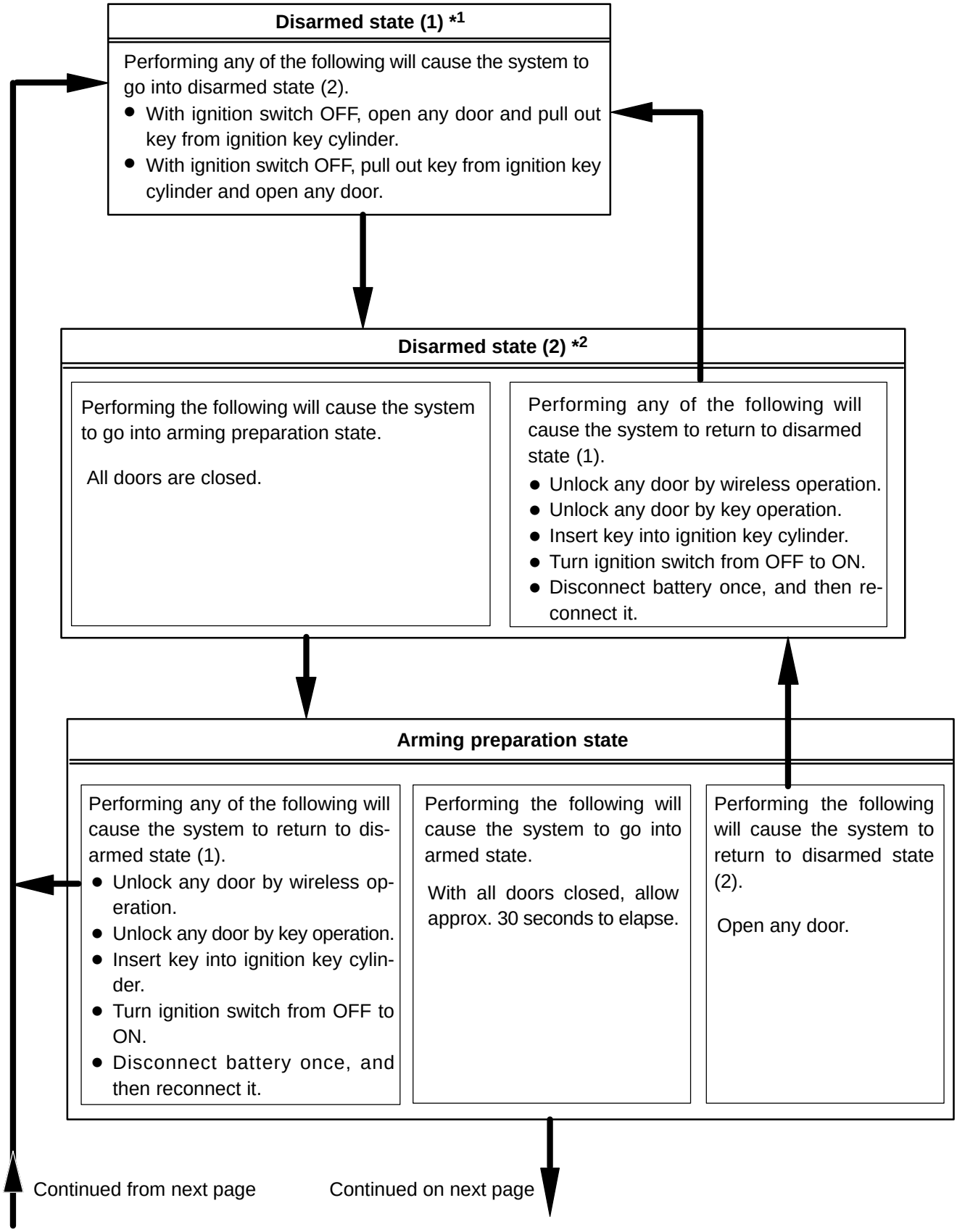

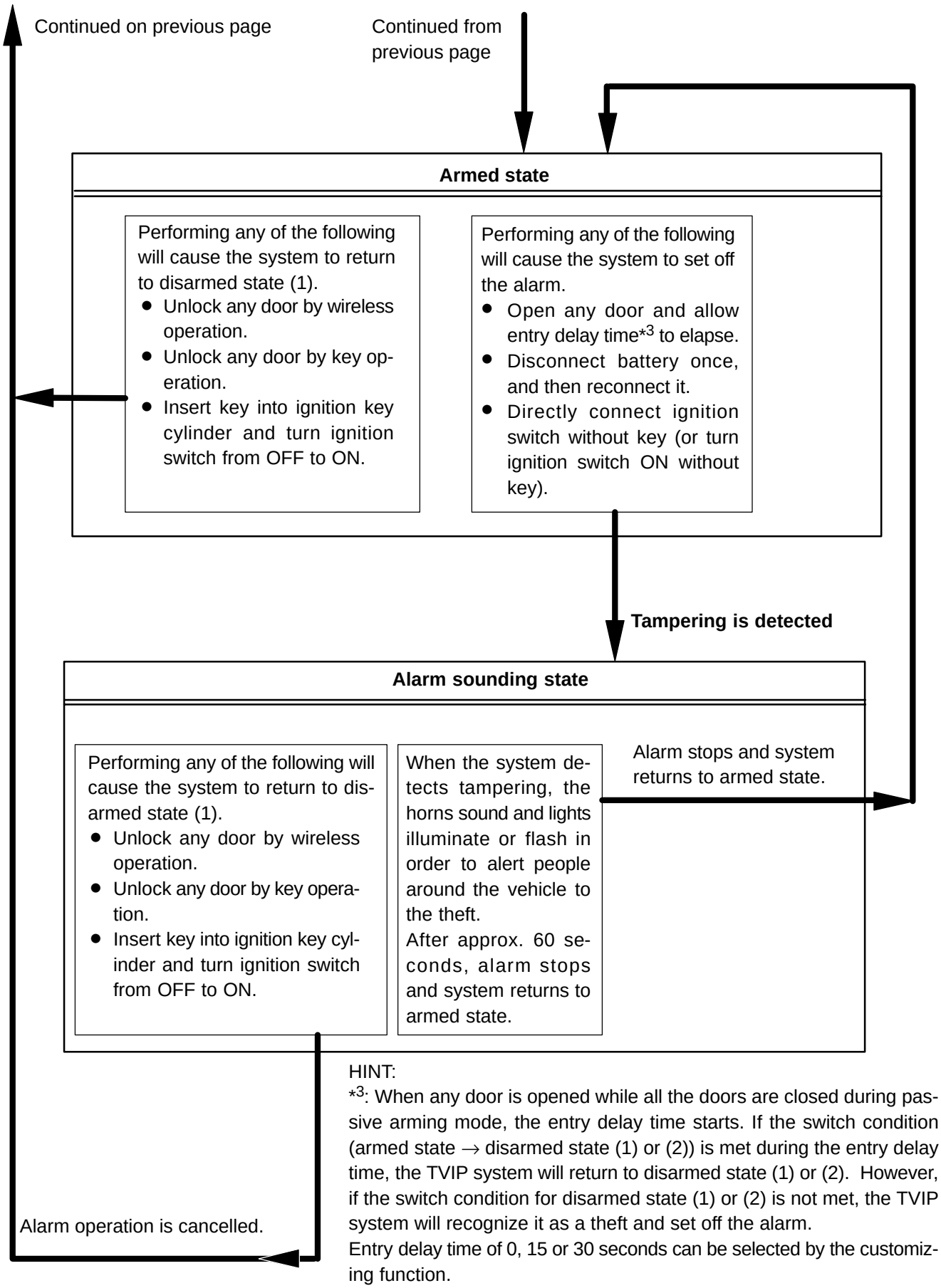

HINT:

*3: When any door is opened while all the doors are closed during passive arming mode, the entry delay time starts. If the switch condition (armed state → disarmed state (1) or (2)) is met during the entry delay time, the TVIP system will return to disarmed state (1) or (2). However, if the switch condition for disarmed state (1) or (2) is not met, the TVIP system will recognize it as a theft and set off the alarm.

Entry delay time of 0, 15 or 30 seconds can be selected by the customizing function.

4. CHANGING METHOD OF PASSIVE ARMING MODE (ON or OFF)

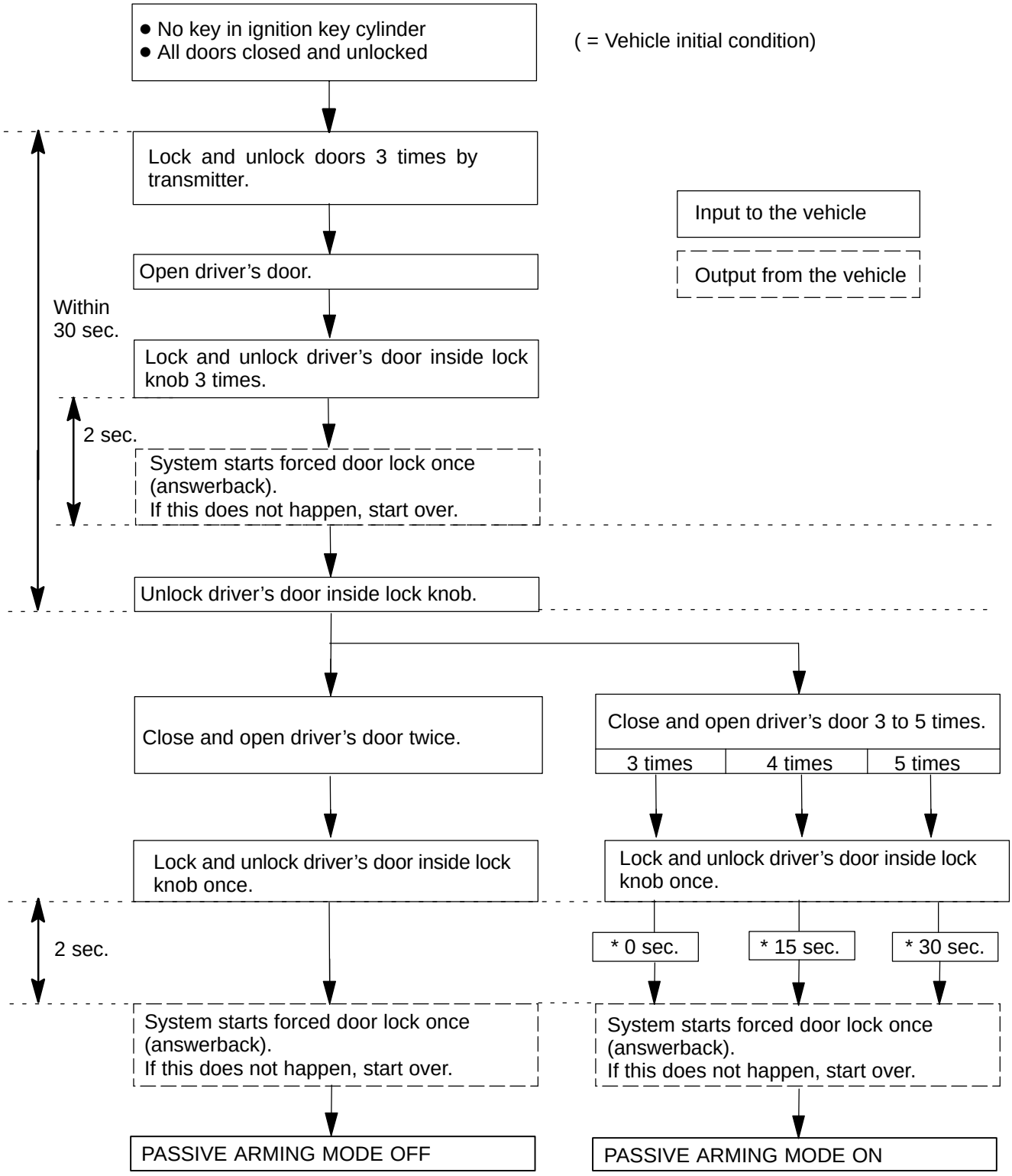

HINT:
- PASSIVE ARMING MODE is OFF in the initial condition.
- If there is a different signal in the middle of changing, it is invalid.

*: Entry delay time

5. FORCED DOOR LOCK CONTROL

(a) The forced door lock control prevents the vehicle from being tampered with. Immediately after a door is unlocked (alarm starts), the door is forced to lock by a forced door lock signal.

(1) Conditions that force the doors to lock:

When no key is in the ignition key cylinder, the doors will be forced to lock if any of the following conditions is met.

- The TVIP system is in the alarm sounding state of active arming mode.
- All the doors are locked. → Any door is unlocked.
- No key is in the ignition key cylinder.
- Since the previous forced door lock, 0.38 seconds or more have elapsed.

6. Indicator light output

Condition	Indicator light
Disarmed state	OFF
Arming preparation state	ON
Armed state (Entry delay time)	BLINK (ON)
Alarm sounding state	ON

HINT:

Blinking frequency:

0.2 seconds (ON)

1.8 seconds (OFF)

7. PANIC ALARM CONTROL

(a) The panic alarm control makes it possible for you to voluntarily set off the panic alarm by pressing the PANIC switch on the wireless transmitter. However, this control operates independently from the alarm control by the TVIP system (switched to the alarm sounding state from the armed state).

(1) Conditions that cause the panic alarm control to set off the panic alarm:

The panic alarm control sets off the panic alarm by pressing the PANIC switch on the wireless transmitter under the following conditions.

- The ignition switch is OFF.
- The TVIP system is not in the alarm sounding state (common to active arming mode and passive arming mode).
- The panic alarm control is not operating (the alarm is not set off).

(2) Conditions that cause the panic alarm control to shut off the alarm:

The panic alarm control shuts off the panic alarm when any of the following conditions is met during panic alarm operation.

- The ignition switch is turned ON.
- Any of the switches on the wireless transmitter (PANIC/LOCK/UNLOCK) is pressed.
- The panic alarm ends (60 seconds have passed).
- The TVIP system switches to the alarm sounding state (common to active arming mode and passive arming mode). However, the alarm is still sounding, because the TVIP system has switched to the alarm sounding state. Conditions for canceling the panic alarm are the same as for the alarm control.

HINT:

Active arming mode: See step 2

Passive arming mode: See step 3

8. Switch to the active arming mode

HINT:

In each state of the passive arming mode, when the switch condition to the active arming mode (disarmed state of active arming mode → arming preparation state of active arming mode) is satisfied, the system will switch to each state of the active arming mode. In this case, the active arming mode will continue until the system switches to the disarmed state.

State of Passive Arming Mode Before Switch	State of Active Arming Mode After Switch
Disarmed state	Arming preparation state
Arming preparation state	Arming preparation state (continuing for 30 seconds)
Armed state (except during entry delay time)	Armed state
Armed state (during entry delay time)	After alarming time has elapsed, the system will switch to the armed state
Alarm sounding state	After alarming time has elapsed, the system will switch to the armed state

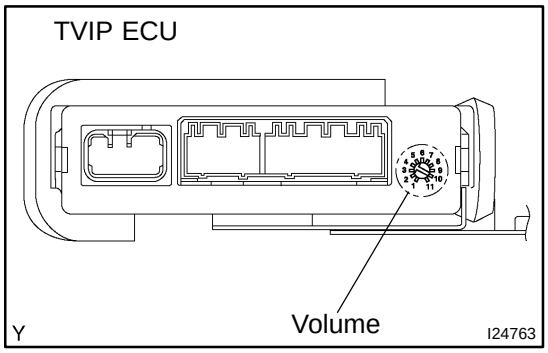

9. OPERATE GLASS BREAKAGE SENSOR

HINT:

The glass breakage sensor functions only during the active arming mode.

(a) If the glass breakage sensor detects that the glass is broken (at 1st time), the sensor will set off an alarm for 20 seconds (pre−alarm). If the glass breakage sensor detects that the glass is broken furthermore (at 2nd time), the sensor will set off an alarm for 60 seconds.

HINT:

If the 2nd detection is performed during the pre−alarming time (20 seconds), the sensor will continuously set off the 2nd alarm. At this time, the total alarming time of the 1st alarm (pre−alarm) and 2nd alarm is 60 seconds.

(b) The sensitivity of the glass breakage sensor can be adjusted by the volume switch in the glass breakage sensor.

HINT:

Because the glass breakage sensor has a high sensitivity, it might set off a wrong alarm if the volume switch is adjusted to high sensitivity.

BE179−04

INSPECTION

1. INSPECT FRONT WIPER AND WASHER SWITCH CONTINUITY

w/ Mist:

Switch Position	Tester Connection	Specified Condition
MIST	7 − 17, 16 − 17	Continuity
OFF	7 − 16	Continuity
LO	7 − 17	Continuity
HI	8 − 17	Continuity
Washer ON	2 − 11	Continuity

w/ Intermittent:

Switch Position	Tester Connection	Specified Condition
OFF	7 − 16	Continuity
INT	7 − 16	Continuity
LO	7 − 17	Continuity
HI	8 − 17	Continuity
Washer ON	2 − 11	Continuity

If the continuity is not as specified, replace the switch.

2. INSPECT INTERMITTENT OPERATION

(a) Turn the wiper switch to the INT position.

(b) Turn the intermittent time control switch to the FAST position.

(c) Connect the positive (+) lead from the battery to terminal 16 and the negative (−) lead to terminal 2.

(d) Connect the positive (+) lead from the voltmeter to terminal 7 and the negative (−) lead to terminal 2, check that the meter needle indicates battery positive voltage.

INT time control switch position	Voltage
FAST	Approx. 1 to 3 sec. — Battery positive voltage / 0 V
SLOW	Approx. 10 to 15 sec. — Battery positive voltage / 0 V

V03883

If the result is not as specified, replace the switch.

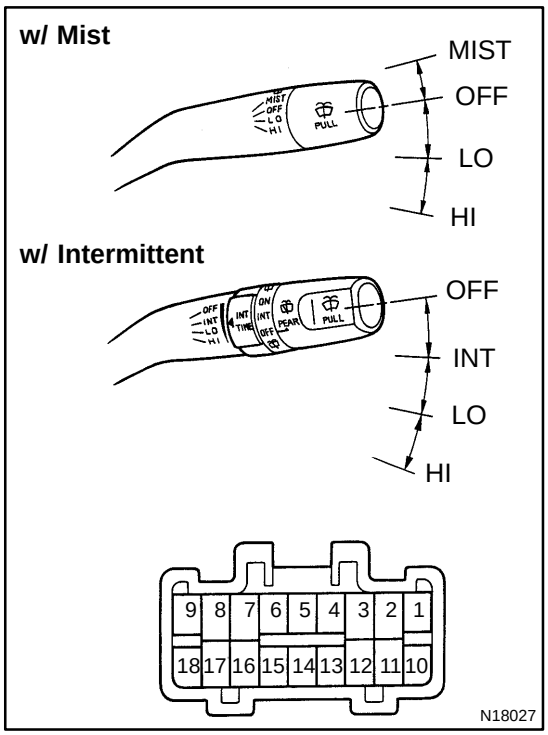

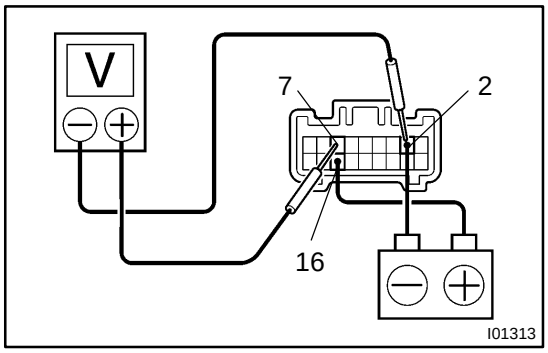

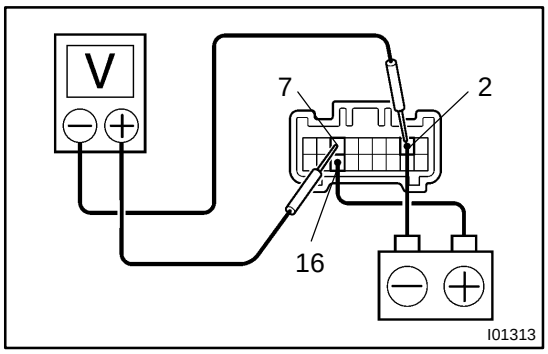

3. INSPECT WASHER LINKED OPERATION

(a) Connect the positive (+) lead from the battery to terminal 16 and the negative (−) lead to terminal 2.

(b) Connect the positive (+) lead from the voltmeter to terminal 7 and the negative (−) lead to terminal 2.

(c) Push in the washer switch, and check that the voltage changes as shown in the table below.

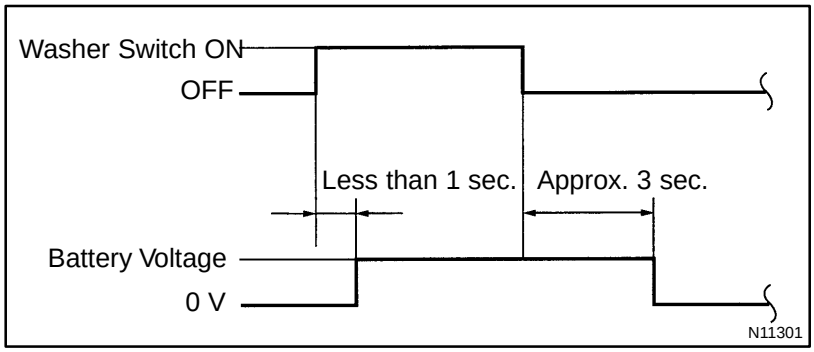

If the operation is not as specified, replace the wiper and washer switch.

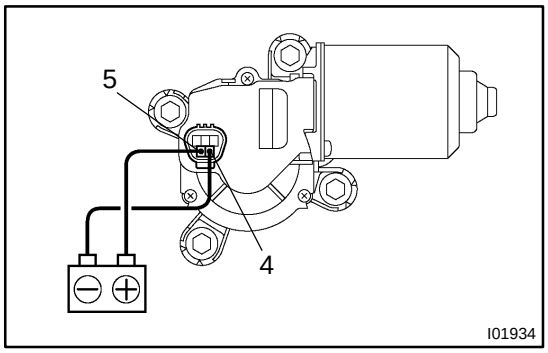

4. Low speed:
INSPECT WIPER MOTOR OPERATION

Connect the positive (+) lead from the battery to terminal 5 and the negative (−) lead from the battery to the motor body or terminal 4, and check that the motor operates at low speed.
If operation is not as specified, replace the motor.

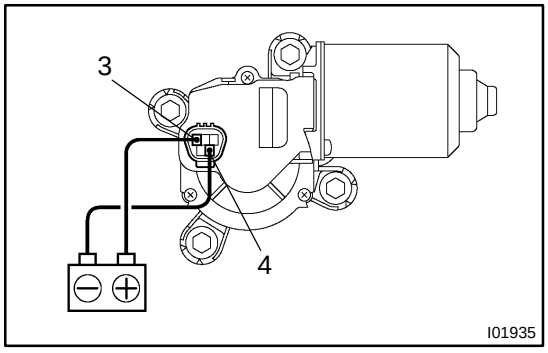

5. High speed:
INSPECT WIPER MOTOR OPERATION

Connect the positive (+) lead from the battery to terminal 3 and the negative (−) lead from the battery to the motor body or terminal 4, and check that the motor operates at high speed.
If operation is not as specified, replace the motor.

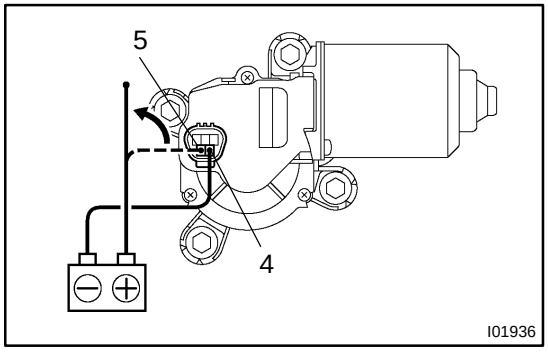

6. Stopping at stop position:
INSPECT WIPER MOTOR OPERATION

(a) Operate the motor at low speed and stop the motor operation anywhere except at the stop position by disconnecting the positive (+) lead from terminal 5.

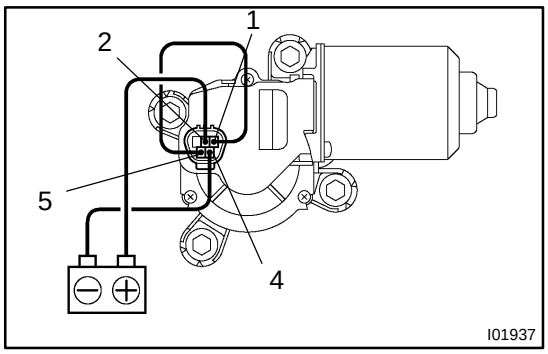

(b) Connect terminals 1 and 5.
(c) Connect the positive (+) lead from the battery to terminal 2 and the negative (−) lead from the battery to the motor body or terminal 4, and check that the motor stops running at the stop position after the motor operates again.

If operation is not as specified, replace the motor.

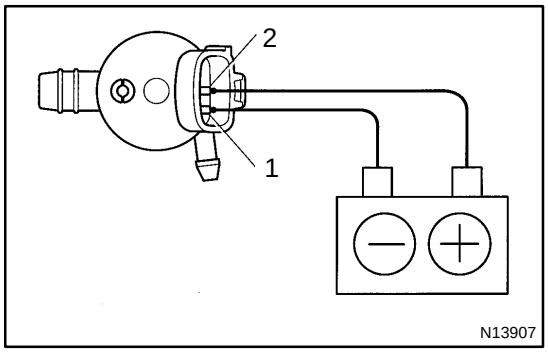

7. INSPECT WASHER MOTOR OPERATION

Connect the positive (+) lead from the battery to terminal 2 and the negative (−) lead to terminal 1, and check that the motor operates.

NOTICE:

These tests must be performed quickly (within 20 seconds) to prevent the coil from burning out.

If operation is not as specified, replace the motor.

WIPER AND WASHER SYSTEM

BE03B−09

LOCATION

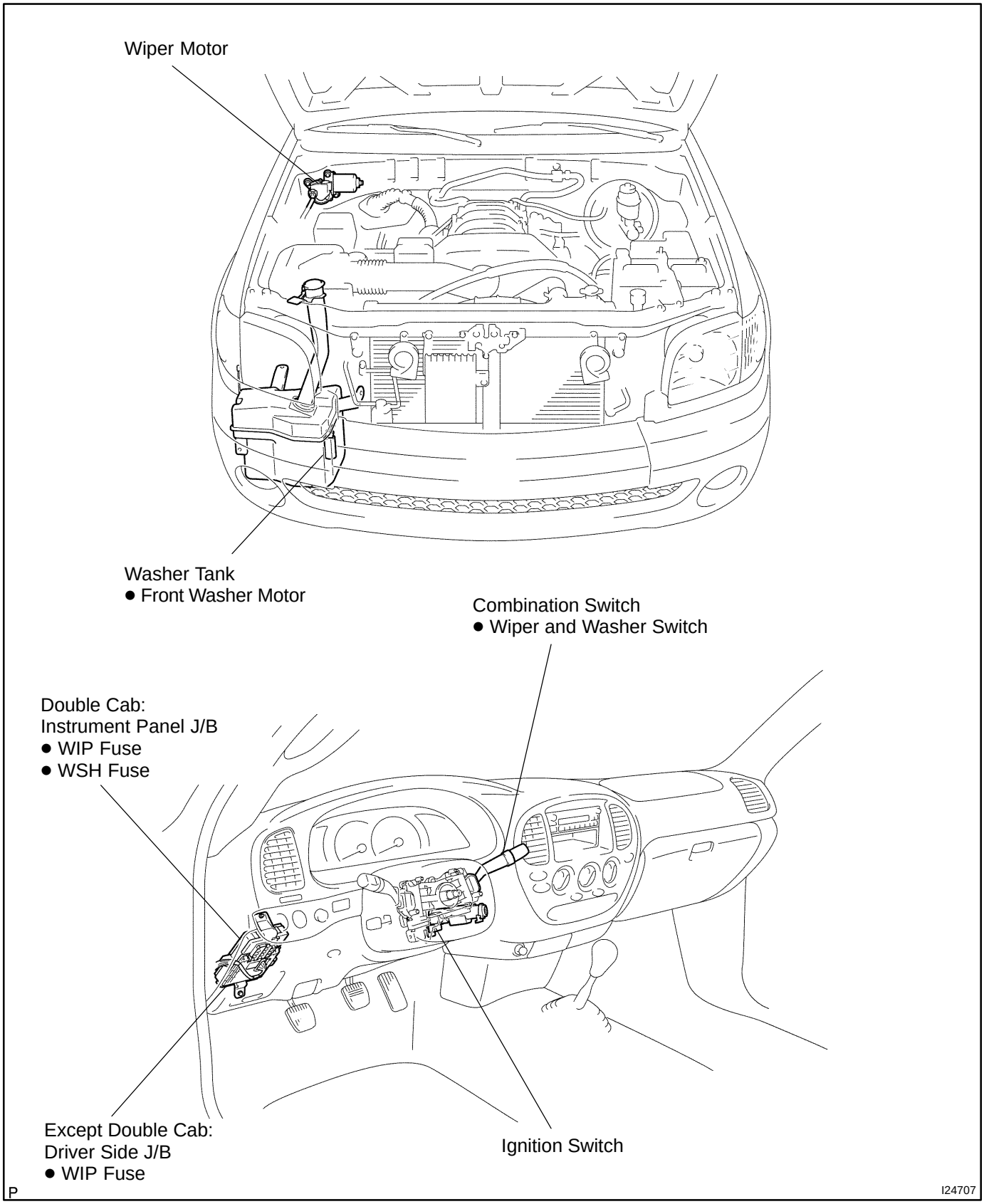

BE2LP−01

INSPECTION

1. INSPECT DOOR LOCK TRANSMITTER

(a) Inspect operation of the transmitter.

(1) Remove the battery (lithium battery) from the transmitter (see page BE−168).

(2) Install a new or normal battery (lithium battery).

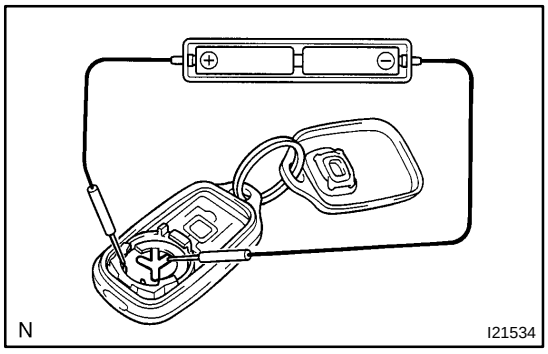

HINT:

When a new or normal battery is not available, connect 2 new 1.5 V batteries in series, connect the battery's positive (+) to the battery receptacle side terminal and battery's negative (−) to the bottom terminal, then apply 3 V of voltage to the transmitter.

(3) In a location that is approx. 1 m (3.28 ft) away from the driver side outside door handle in the right direction, point the key plate of the transmitter at the vehicle and check operation of the transmitter by pressing the transmission switch on the transmitter body.

Standard:

The door lock can be operated via the remote control.

HINT:

- The minimum operational distance differs depending on the operator, the way the transmitter is held and the location.
- Since the transmitter uses faint electric waves, the operational distance might be shortened if noise or strong electric wave occurs in the area where the frequency is used.

(4) Install the battery (lithium battery).

(b) Inspect the battery capacity.

HINT:

- The capacity of the battery can be determined only when the battery is installed in the transmitter. For a lithium battery used in the transmitter, a voltage of more than 2.5 V is shown on the tester until the energy is completely consumed, while no battery is installed in the transmitter. Therefore, it is necessary to measure the voltage while the battery is installed in the transmitter (a resistance of 1.2 kΩ is applied to the battery) when checking the amount of energy left in the battery.
- If the transmitter is faulty, the amount of energy left in the battery might not be checked correctly.

(1) Remove the battery (lithium battery) from the transmitter (see page BE−168).

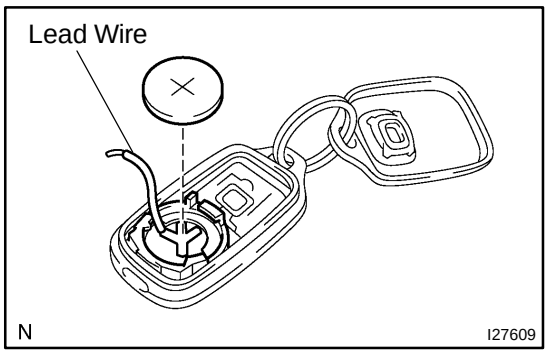

(2) Connect the lead wire to the negative (−) terminal of the transmitter and install the battery.

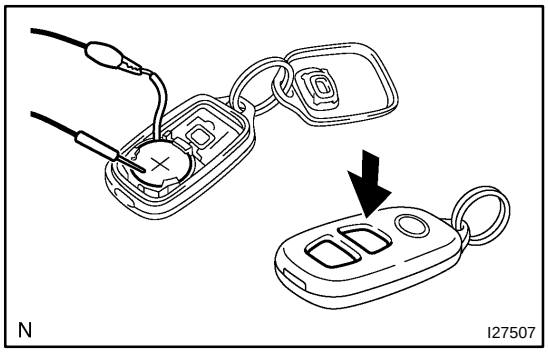

(3) Connect the tester positive (+) probe to the positive (+) battery (lithium battery) and the tester negative (−) probe to the lead respectively.
(4) Press one of the transmission switches on the transmitter for approx. 1 second.
(5) Press the transmission switch on the transmitter again to check the voltage.

Standard: 2.2 V or higher

HINT:

- When the temperature of the battery is low, the inspection cannot be made correctly.
  When the outcome of the test is less than 2.2 V, conduct the test again after leaving the battery in a place with a temperature of 18˚C (64°F) for more than 30 minutes.
- The automatic power−off function causes the voltage of the battery to be 2.5 V or more (a voltage with no resistance applied to the battery) when 0.8 seconds have passed after the switch is pressed. Therefore, make sure to read the voltage just after the switch is pressed.
- Because high voltage might be shown once or twice after the battery returns to the specified temperature, the inspection should be made with the voltage shown after the switch is pressed at least 3 times.

(6) Disconnect the lead.
(7) Set the battery (lithium battery) in the transmitter.

BE2LO–01

LOCATION

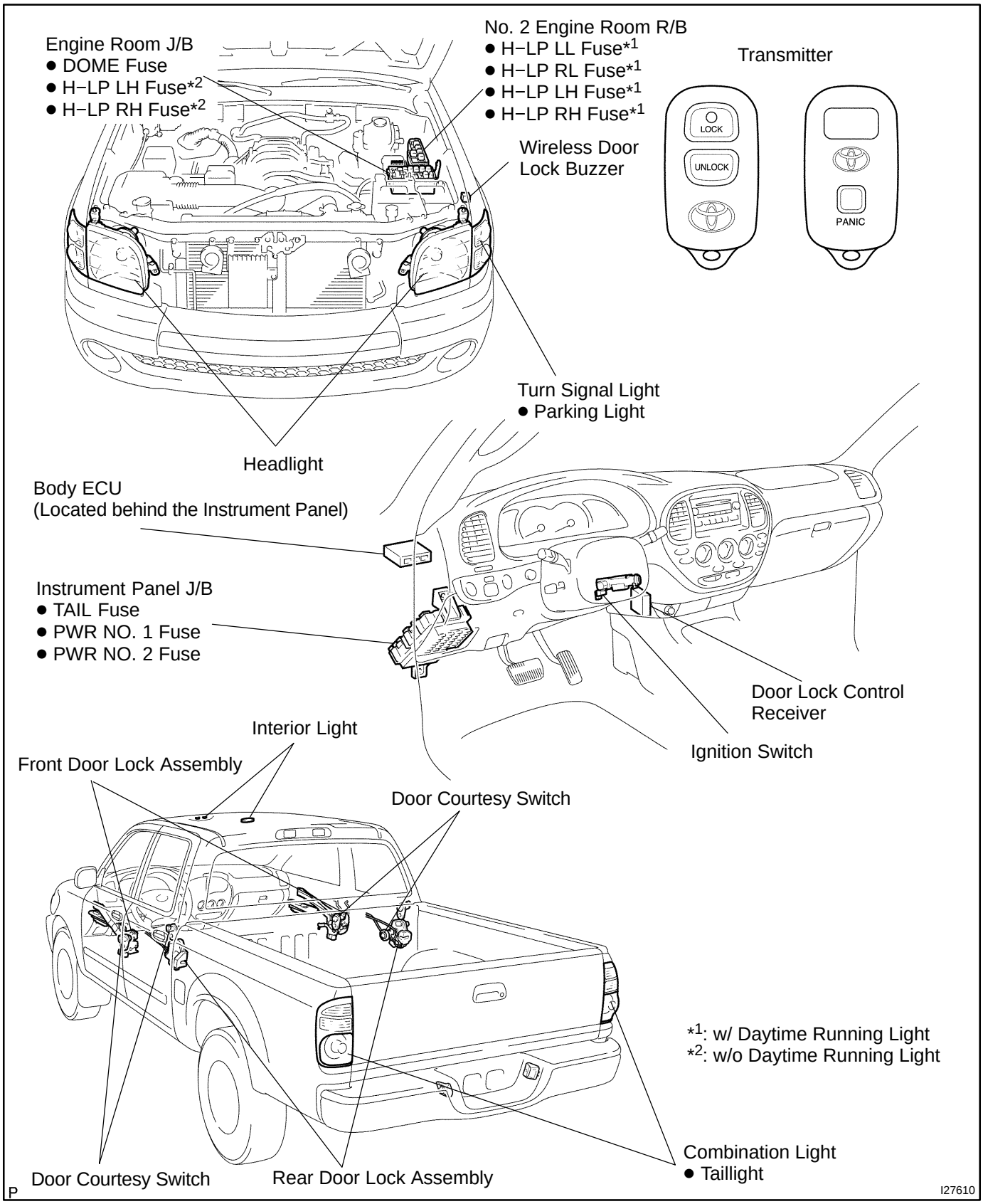

BE2LR−02

ON−VEHICLE INSPECTION

1. SYSTEM CHECK

Only wireless function (Remote control) does not operate.
(If a new transmitter or a transmitter for same type vehicle that works properly with vehicle is not available.)

Put vehicle in following conditions (Pre−requisite).
(1) No key is inserted in ignition key cylinder.
(2) All doors are closed. (Door warning light is off.)
(3) All doors are locked.

Basic function check:

Using standard operation, press UNLOCK or LOCK transmitter switch 3 times or more alternately.
Check that UNLOCK or LOCK operation works properly from 3rd time onward.
● Standard operation.
(1) Stand approximately 1 m (3.28 ft) away from driver's door outlide handle on its right.
(2) Hold transmitter toward vehicle and press one of transmitter switches for approximately 1 second.

No

Yes

Normal
<Reference>
● Operative distance may differ according to an operator, way of holding transmitter or position.
● As weak electric wave is used, when there is strong wave or noise in used frequency, operation distance might be shortened.

Continued on next page

Continued from previous page

Transmitter battery check:

Replace transmitter battery with a new or normal one and check UNLOCK−LOCK function works using standard operation.
<Reference>
Battery quality can be judged by checking remaining battery capacity.

Yes → Battery faulty

No

Put vehicle in same conditions as shown in previous page. (Pre−requisite)

Inspection starts by using self−diagnostic mode:

Enter self−diagnostic mode.
When operating door control receiver as follows (steps 1 to 2), vehicle enters self−diagnostic mode.
(1) Insert key into ignition key cylinder and pull it out. Then, insert it again and turn ignition switch OFF → ON → OFF once within 5 seconds after pulling it out,.
(2) Within 30 seconds, after completing above step, turn ignition switch OFF → ON → OFF 9 times.
HINT:
If neither of (1) or (2) conditions is satisfied, vehicle returns to normal mode.
<Reference>
When completing self−diagnostic mode, turn ignition switch ON.
LOCK and UNLOCK operation is not performed under self−diagnostic mode.

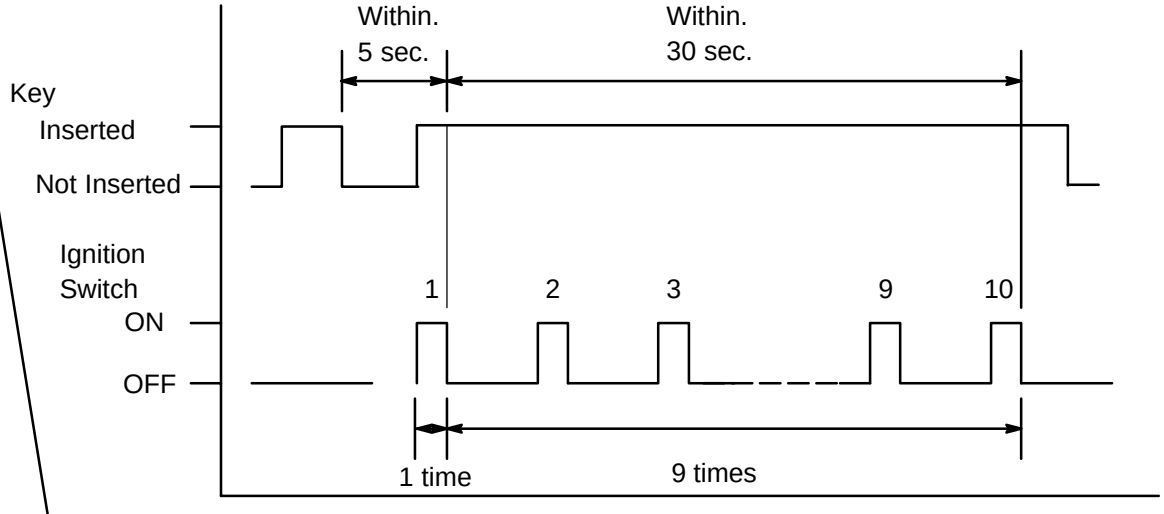

Continued on next page

Continued from next page

Continued from previous page

Self−diagnostic mode operation check:

After self−diagnostic mode input operation has been performed, check that buzzer chirps.

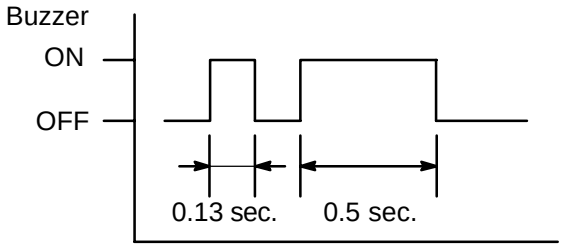

No
(Not entered self−diagnostic mode)

Is method to enter self−diagnostic mode correct?

No

Yes

Is chirping function of operation confirmation buzzer normal?

No

Check wireless door lock buzzer.

Yes

Yes
(Entered self−diagnostic mode)

Key unlock warning switch inspection:

Check that continuity exists between connector terminal B11−22 of body ECU on vehicle side and ground by inserting key into ignition key cylinder.

Check key unlock warning switch.

Self−diagnostic mode check:

Check that how buzzer chirps when pressing each transmitter switch.

(1) Receiver normal wave of LOCK switch

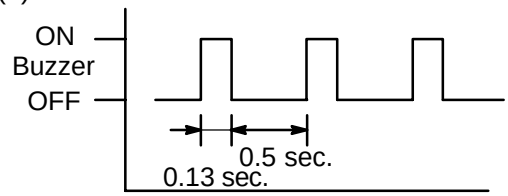

(2) Receiver normal wave of UNLOCK switch

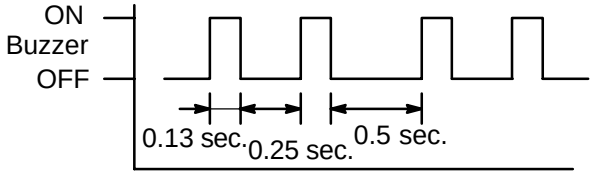

(3) Incompatibility of recognition code or out from synchronization of rolling code

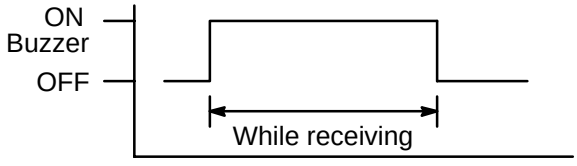

<Reference>:
While turning ignition switch ON in self−diagnostic mode, vehicle returns to normal mode.

(1) or (2) is output.

Continued on next page

(3) is output.
(All buzzer's response is same.)

Recognition code registration function check:

Check that it is possible to enter rewrite mode or add mode (see page BE−154).

Wireless door lock operates normally when recognition code is registered.

No response from buzzer

Continued on next page

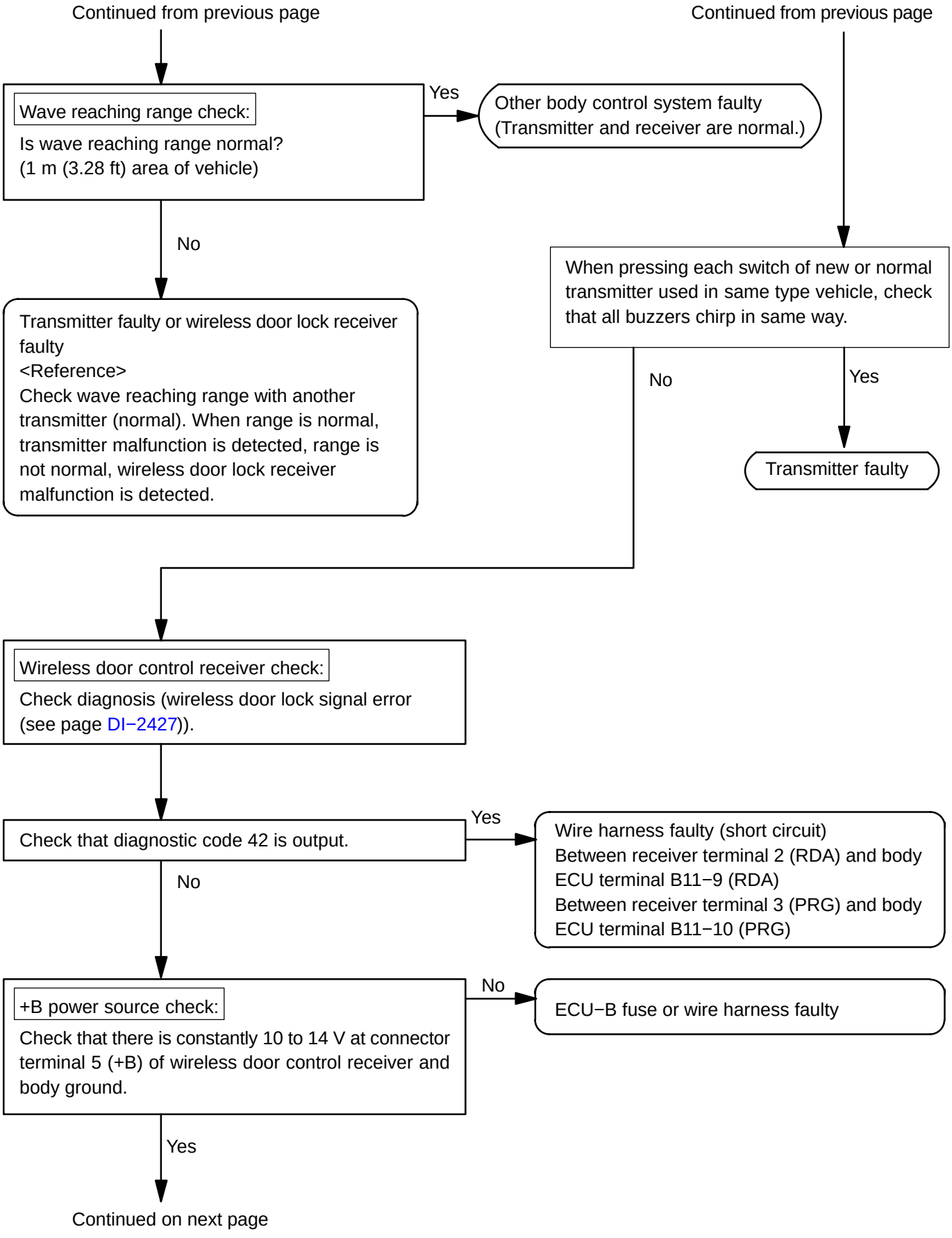
Continued from previous page
Continued from previous page
Wave reaching range check:
Is wave reaching range normal?
(1 m (3.28 ft) area of vehicle)
Yes
Other body control system faulty
(Transmitter and receiver are normal.)
No
When pressing each switch of new or normal transmitter used in same type vehicle, check that all buzzers chirp in same way.
Transmitter faulty or wireless door lock receiver faulty
<Reference>
Check wave reaching range with another transmitter (normal). When range is normal, transmitter malfunction is detected, range is not normal, wireless door lock receiver malfunction is detected.
No
Yes
Transmitter faulty
Wireless door control receiver check:
Check diagnosis (wireless door lock signal error (see page DI−2427)).
Check that diagnostic code 42 is output.
Yes
Wire harness faulty (short circuit)
Between receiver terminal 2 (RDA) and body ECU terminal B11−9 (RDA)
Between receiver terminal 3 (PRG) and body ECU terminal B11−10 (PRG)
No
+B power source check:
Check that there is constantly 10 to 14 V at connector terminal 5 (+B) of wireless door control receiver and body ground.
No
ECU−B fuse or wire harness faulty
Yes
Continued on next page

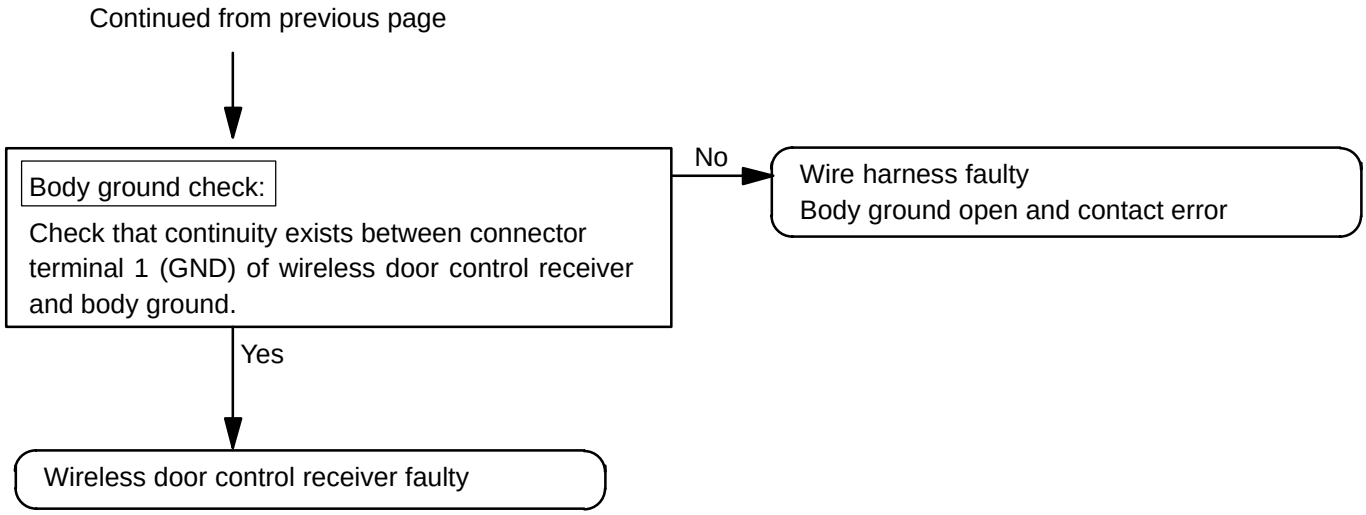

2. INSPECT WIRELESS DOOR LOCK CONTROL FUNCTIONS

HINT:

- The switch described in this text is a switch for transmitting signals which is built into the door control transmitter.
- All the functions listed below must be checked in the remote control operational area.

(a) Put the vehicle under the conditions that allow the wireless control function to be operated (see PRECAUTION on page BE−153).

(b) Check the basic function.
  (1) Check that all the doors lock when the LOCK switch is pressed.
  (2) Check that only the driver side door unlocks when the UNLOCK switch is pressed once and the other doors unlock when the UNLOCK switch is pressed again within 3 seconds.

(c) Check the chattering prevention function.
Check that the corresponding operation occurs only once and is not repeated continuously while the switch is held. However, when the switch is operated repeatedly at 1 second intervals, check that the corresponding operation is carried out.

(d) Check the automatic lock function.
  (1) Check that all the doors lock automatically as long as none of them have been opened or all the doors have not been locked within approximately 30 seconds after they are unlocked by pressing the UNLOCK switch.
  (2) Check that the automatic locking function does not operate when any door has been opened or all of them have been locked within approximately 30 seconds after they are unlocked by pressing the UNLOCK switch.

(e) Check the switch operation fail−safe function.
Check that the doors cannot be locked using the switch while the key is in the ignition key cylinder. However, this does not apply when the system is in the recognition code registration mode.

(f) Check the operation stop function when a door is open or not completely closed.
Check that the doors are not locked by the switch while any door is open or not completely closed.

(g) Check the repeat function.
Check that all the doors attempt to automatically lock once again 1 second after the LOCK switch has been pressed while the movement of the driver side door control knob is being restricted in the unlocked position.

(h) Check the taillights and parking lights flashing and wireless door lock buzzer chirp functions (answer−back).
  (1) When the LOCK switch is pressed, check that the lights flash once and buzzer chirps once with the locking of all the doors.

(2) When the UNLOCK switch is pressed once, check that the lights flash twice with the unlocking of the driver side door.
(3) When the UNLOCK switch is pressed again within 3 seconds, check that the light flashes twice with the unlocking of all the doors.

(i) Check the illuminated entry function.
(1) When all the doors are locked, pressing the UNLOCK switch causes the interior light (when the light switch is in the DOOR position) to illuminate simultaneously with the unlock operation.
(2) Check that the interior light fades out in approximately 15 seconds if doors have not been opened.

(j) Check the remote panic alarm function.
Check that the horn sounds, and the headlights and taillights flash for 60 seconds by the theft alarm function when the PANIC switch is pressed. Also, check that the horn stops sounding and the lights stop flashing when either PANIC or UNLOCK switch on the transmitter is pressed or any door is unlocked using the key.

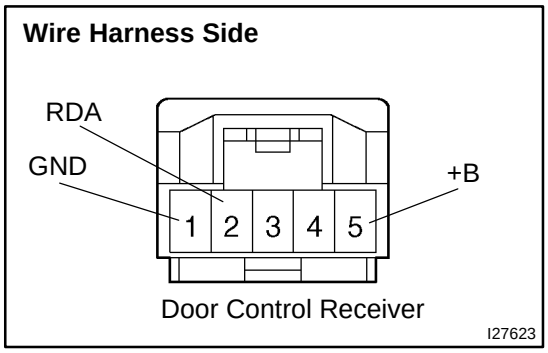

3. CHECK DOOR CONTROL RECEIVER

(a) Disconnect the receiver connector.
(b) Check the voltage and resistance between the terminals of the wire harness side connector of the receiver and body ground.
Standard:

Tester Connection	Specified Condition
5 (+B) − Body ground	10 − 14 V
1 (GND) − Body ground	Continuity

If the result is not as specified, there may be a malfunction on the wire harness side.

(c) Reconnect the connector and check the voltage between the terminal and body ground.
Standard:

Tester Connection	Condition	Specified Condition
2 (RDA) − Body ground	No key in ignition key cylinder, all doors closed and each transmitter switch OFF → ON	Below 1 V → Approx. 6 to 7 V → Below 1 V

If the result is not as specified, the receiver may have a malfunction.

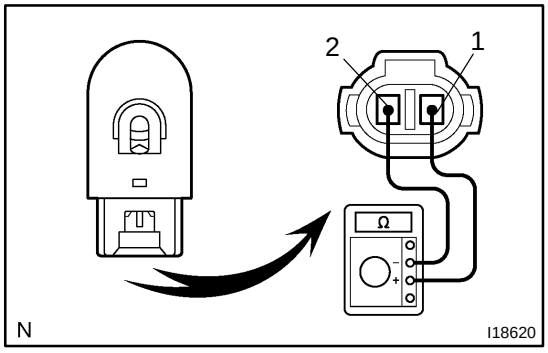

4. INSPECT WIRELESS DOOR LOCK BUZZER

Connect the positive (+) lead from the ohmmeter to terminal 1 and the negative (−) lead to terminal 2, and measure resistance.
Standard: Approximately 1 kΩ
If the resistance is not as specified, replace the buzzer.

WIRELESS DOOR LOCK CONTROL SYSTEM (Double Cab)

BE2LM–01

PRECAUTION

NOTICES WHEN CHECKING

(a) Power door LOCK/UNLOCK function:

The wireless remote control function operates only when the following 3 conditions are met.

(1) No key is inserted into the ignition key cylinder.

(2) All the doors are closed (door open indicator off).

(3) The power door lock system operates normally.

HINT:

- The UNLOCK function operates even when any door is open.
- The UNLOCK function operates even when the key is inserted into the ignition key cylinder, however it must be in the OFF position.

(b) Remote panic function:

The wireless remote control function operates only when the following condition is met.

The ignition switch is OFF.

HINT:

The key can be inserted, however it must be in the OFF position.

(c) The wireless door lock remote control operational area differs depending on the situation.

(1) The operational area differs depending on the operators and the ways the transmitter is held.

(2) In certain areas, the remote control function will only operate partially for the operational area will be reduced due to the vehicle body shape and the influence of the surrounding environment.

(3) Since the transmitter uses faint electric waves, strong electric waves or noise in the frequency used may reduce the operational area or the remote control may not function.

(4) When the battery weakens, the operational area is reduced or the remote control may not function.

HINT:

If the door control transmitter has been left in a place that is exposed to direct sunlight, such as on the instrument panel, it may cause the battery to weaken or cause other such problems.

BE2LN−01

REGISTRATION PROCEDURE

REGISTER RECOGNITION CODE

HINT:

- Register the recognition code when replacing the door control transmitter or the door control receiver.
- The add mode is used to register new recognition codes while still retaining codes already registered. This mode is used when a new transmitter is added. If the number of registered codes exceeds 4, the previously registered codes will be erased in order, starting from the first registered code.
- The rewrite mode is used to erase all the previously registered recognition codes in order to register new recognition codes. This mode is used when the transmitter or the door control receiver is replaced a new one.
- The confirmation mode is used to confirm how many recognition codes have already been registered before an additional registration of a recognition codes.
- The prohibition mode is used to erase all the registered codes and disables the wireless door lock function. This mode is used when the transmitter is lost.
- All the following registration procedures must be performed in order continuously.

Flow Chart of Recognition Code Registration

START

Make sure that the following conditions are met.
- No key in ignition key cylinder.
- Driver side door is open (other doors are closed).
- Driver side door is unlocked.

1. Insert key into ignition key cylinder, then pull it out.

Within 40 sec.

2. Press door lock control switch (for manual operation) 5 times to LOCK/UNLOCK at approx. 1 sec. interval.

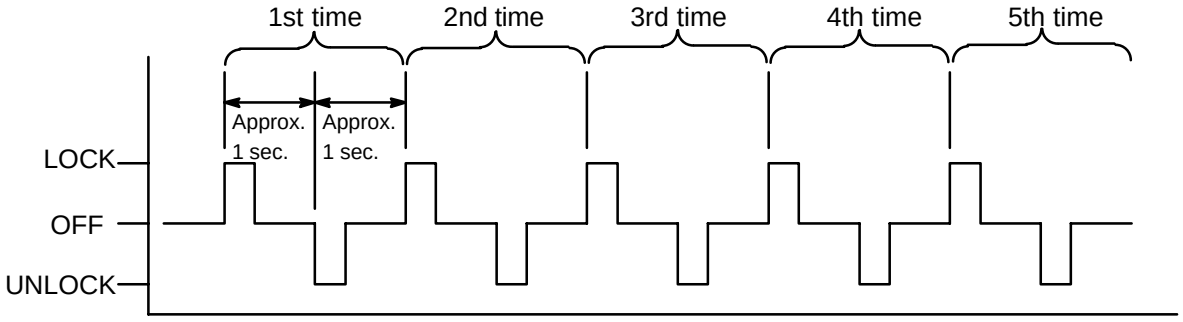

3. Close and open driver side door

Within 40 sec.

4. Press door lock control switch again (for manual operation) 5 times to LOCK/UNLOCK at approx. 1 sec. interval.

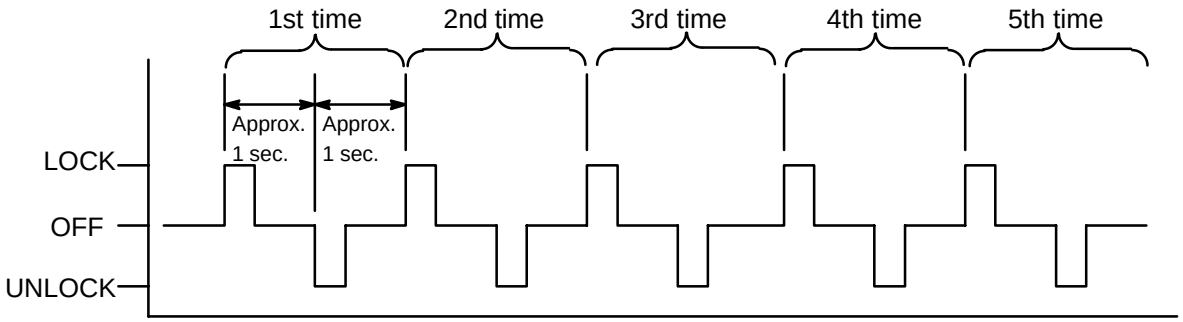

5. Insert key into ignition key cylinder.

Continued on next page

Continued from previous page

Mode Selection:

6. Turn ignition switch from LOCK to ON and back to LOCK at approximately 1 second intervals according to the number of times shown below.

Number of ON−LOCK operations of ignition switch:

Add Mode

ON−LOCK operation: 1 time

T1: Approx. 1 sec.

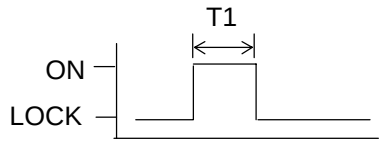

Rewrite Mode

ON−LOCK operation: 2 times

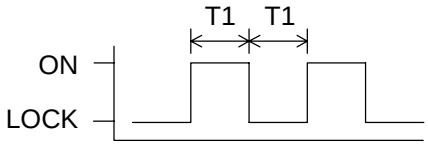

Confirmation Mode

ON−LOCK operation: 3 times

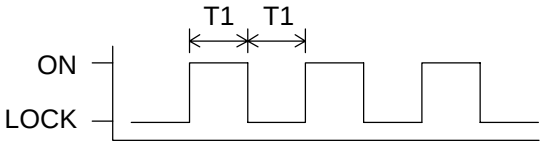

Prohibition Mode

ON−LOCK operation: 5 times

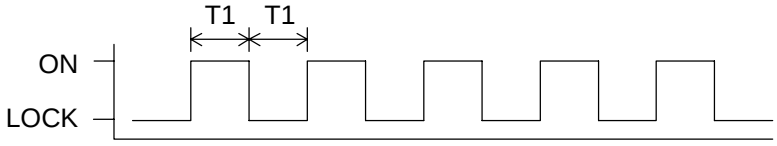

If the number of the ON−LOCK operations of the ignition switch is 0, 4 or 6 or more, there will be no response (power door lock and unlock operation) to show which mode has been selected.

Within 40 sec.

7. Remove key from ignition key cylinder.

Within 3 sec.

Continued on next page

Within 3 sec.

Continued from previous page

Response to selected mode (Power door lock operation):

Body ECU automatically performs power door LOCK−UNLOCK operation to inform which mode has been selected.

Add Mode

LOCK−UNLOCK operation: 1 time

T1: Approx. 1 sec.
T2: Approx. 2 sec.

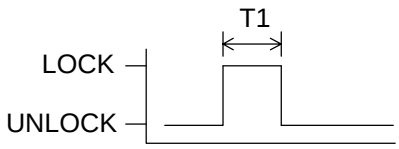

Rewrite Mode

LOCK−UNLOCK operation: 2 times

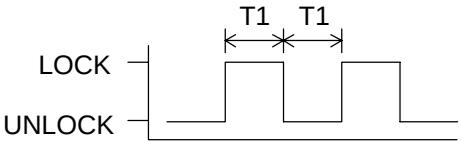

Confirmation Mode

LOCK−UNLOCK operation: The number of registered codes (1 − 5 times)

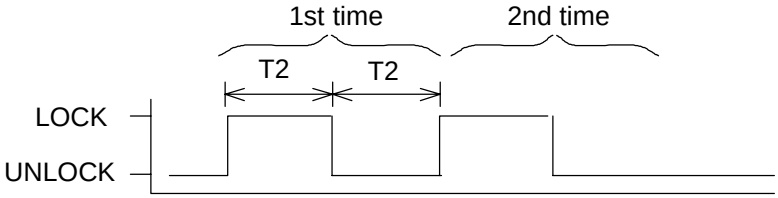

Prohibition Mode

LOCK−UNLOCK operation: 5 times

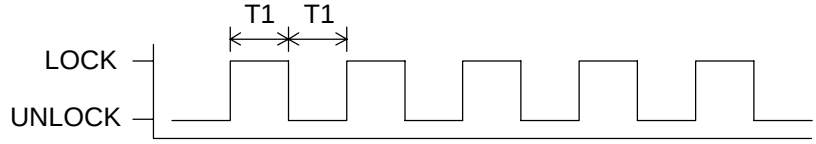

HINT:

- In the confirmation mode, when LOCK−UNLOCK operation is performed twice, the number of registered recognition codes is 2.
- In the confirmation mode, when 0 codes are registered, LOCK−UNLOCK operation is automatically performed 5 times.

Within 40 sec.

Add Mode or Rewrite Mode

Continued on next page

Confirmation Mode and Prohibition Mode

Registration procedures are completed.

Continued from previous page

Within 40 sec.

8. Press LOCK and UNLOCK switches on transmitter simultaneously within 1.5 sec.

Within 3 sec.

9. Press either switch for more than 1.5 sec.

Within 3 sec.

Response to registration completion:

Body ECU automatically performs power door LOCK−UNLOCK operation to show whether registration has been completed correctly or not.

LOCK−UNLOCK Occurs Once

Registration of recognition code has been completed.

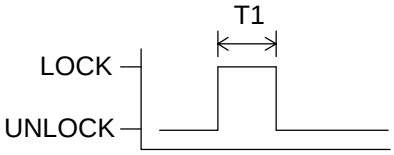

LOCK−UNLOCK Occurs Twice

Registration of recognition code has failed.

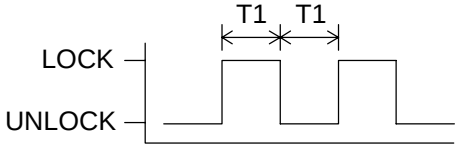

T1: Approx. 1 sec.

HINT:
If LOCK−UNLOCK operation is performed twice, registration of recognition code has failed. Perform registration procedures by beginning once again.

Within 40 sec.

If other transmitter is to be registered.

HINT:
4 recognition codes can be registered at once.

Proceed to flow chart to finish registration.

Perform either of the following.

- Open a door.
- Insert key into ignition key cylinder.

Registration of recognition codes (add mode and rewrite mode) is completed.

BE2LQ−01

REPLACEMENT

1. REMOVE TRANSMITTER BATTERY

NOTICE:

Special caution should be taken for handling each component as they are precision electronic components.

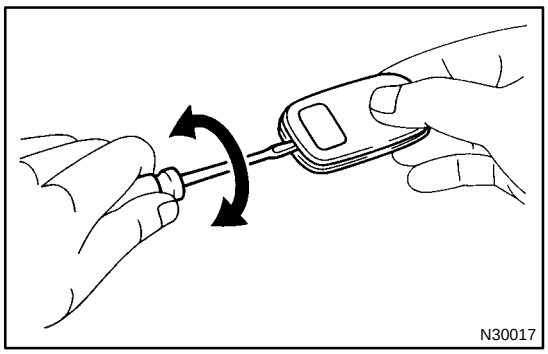

(a) Using a screwdriver, open the transmitter case.

NOTICE:

Do not forcibly pry out the cover.

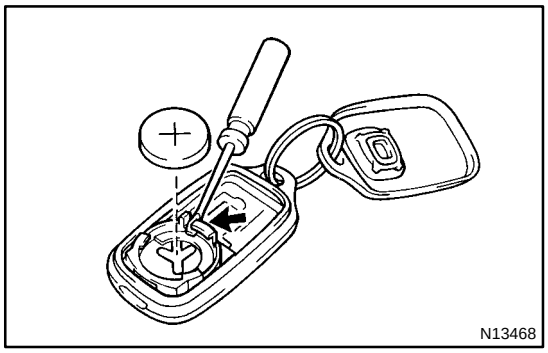

(b) Using a screwdriver, pry out the battery (lithium battery).

NOTICE:

- **Do not push the terminals with your finger.**
- **Prying up the batteries (lithium battery) to forcibly remove it will cause deformation of the terminals.**
- **Do not touch the battery with wet hands. Water may cause unexpected rust.**
- **Do not touch or move any components inside the transmitter as it may interfere with proper operation.**

2. INSTALL TRANSMITTER BATTERY

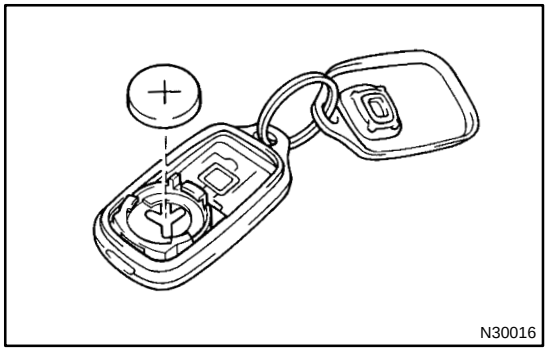

(a) Install a new battery (lithium battery) with the positive (+) side up, as shown in the illustration.

NOTICE:

- **Be sure that the positive side and the negative side of the transmitter battery are matched−up correctly.**
- **Be careful not to bend the electrode of the transmitter battery insertion.**
- **Be careful that dust or oil does not adhere to the transmitter case.**

(b) Install the case securely.

BE2KU−01

INSPECTION

INSPECT DOOR LOCK TRANSMITTER OPERATION

(a) Inspect operation of the transmitter.

(1) Remove the battery (lithium battery) from the transmitter (see page BE−182).

(2) Install a new or normal battery (lithium battery).

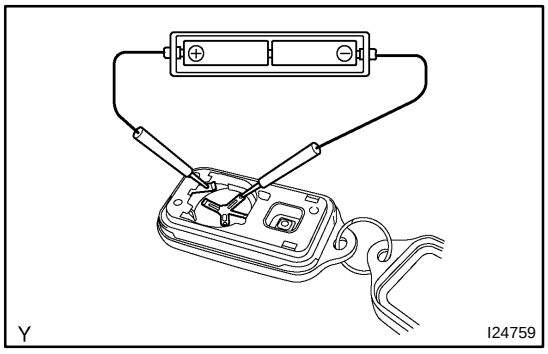

HINT:

When a new or normal battery is not available, connect 2 new 1.5 V batteries in series, connect the battery's positive (+) to the battery receptacle side terminal and battery's negative (−) to the bottom terminal, then apply 3 V of voltage to the transmitter.

(3) In a location that is approx. 1 m (3.28 ft) away from the driver side outside door handle in the right direction, point the key plate of the transmitter at the vehicle and check operation of the transmitter by pressing the transmission switch on the transmitter body.

Standard:

The door lock can be operated via the remote control.

HINT:

- The minimum operational distance differs depending on the operator, the way the transmitter is held and the location.
- Since the transmitter uses faint electric waves, the operational distance might be shortened if noise or strong electric wave occurs in the area where the frequency is used.

(4) Install the battery (lithium battery).

(b) Inspect the battery capacity.

HINT:

- The capacity of the battery can be determined only when the battery is installed in the transmitter. For a lithium battery used in the transmitter, a voltage of more than 2.5 V is shown on the tester until the energy is completely consumed, while no battery is installed in the transmitter. Therefore, it is necessary to measure the voltage while the battery is installed in the transmitter (a resistance of 1.2 kΩ is applied to the battery) when checking the amount of energy left in the battery.
- If the transmitter is faulty, the amount of energy left in the battery might not be checked correctly.

(1) Remove the battery (lithium battery) from the transmitter (see page BE−182).

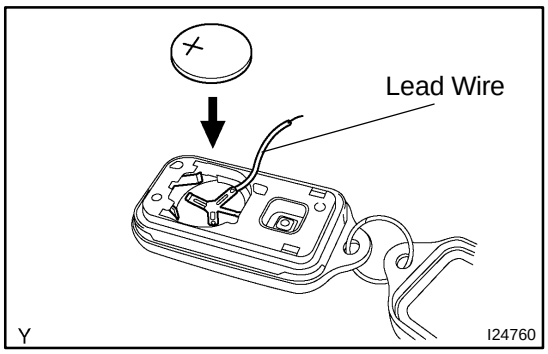

(2) Connect the lead wire to the negative (−) terminal of the transmitter and install the battery.

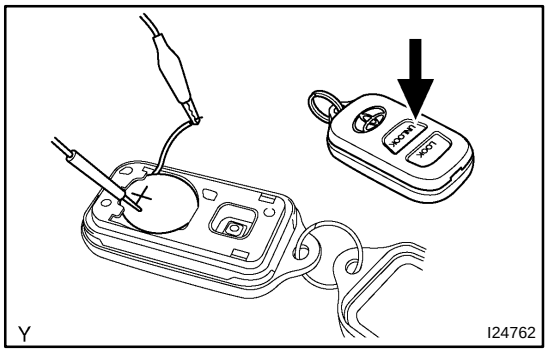

(3) Connect the tester positive (+) probe to the positive (+) battery (lithium battery) and the tester negative (−) probe to the lead respectively.
(4) Press one of the transmission switches on the transmitter for approx. 1 second.
(5) Press the transmission switch on the transmitter again to check the voltage.

Standard: 2.2 V or higher

HINT:

- When the temperature of the battery is low, the inspection cannot be made correctly.
  When the outcome of the test is less than 2.2 V, conduct the test again after leaving the battery in a place with a temperature of 18˚C (64°F) for more than 30 minutes.
- The automatic power−off function causes the voltage of the battery to be 2.5 V or more (a voltage with no resistance applied to the battery) when 0.8 seconds have passed after the switch is pressed. Therefore, make sure to read the voltage just after the switch is pressed.
- Because high voltage might be shown once or twice after the battery returns to the specified temperature, the inspection should be made with the voltage shown after the switch is pressed at least 3 times.

(6) Disconnect the lead.
(7) Set the battery (lithium battery) in the transmitter.

BE2KT–01

LOCATION

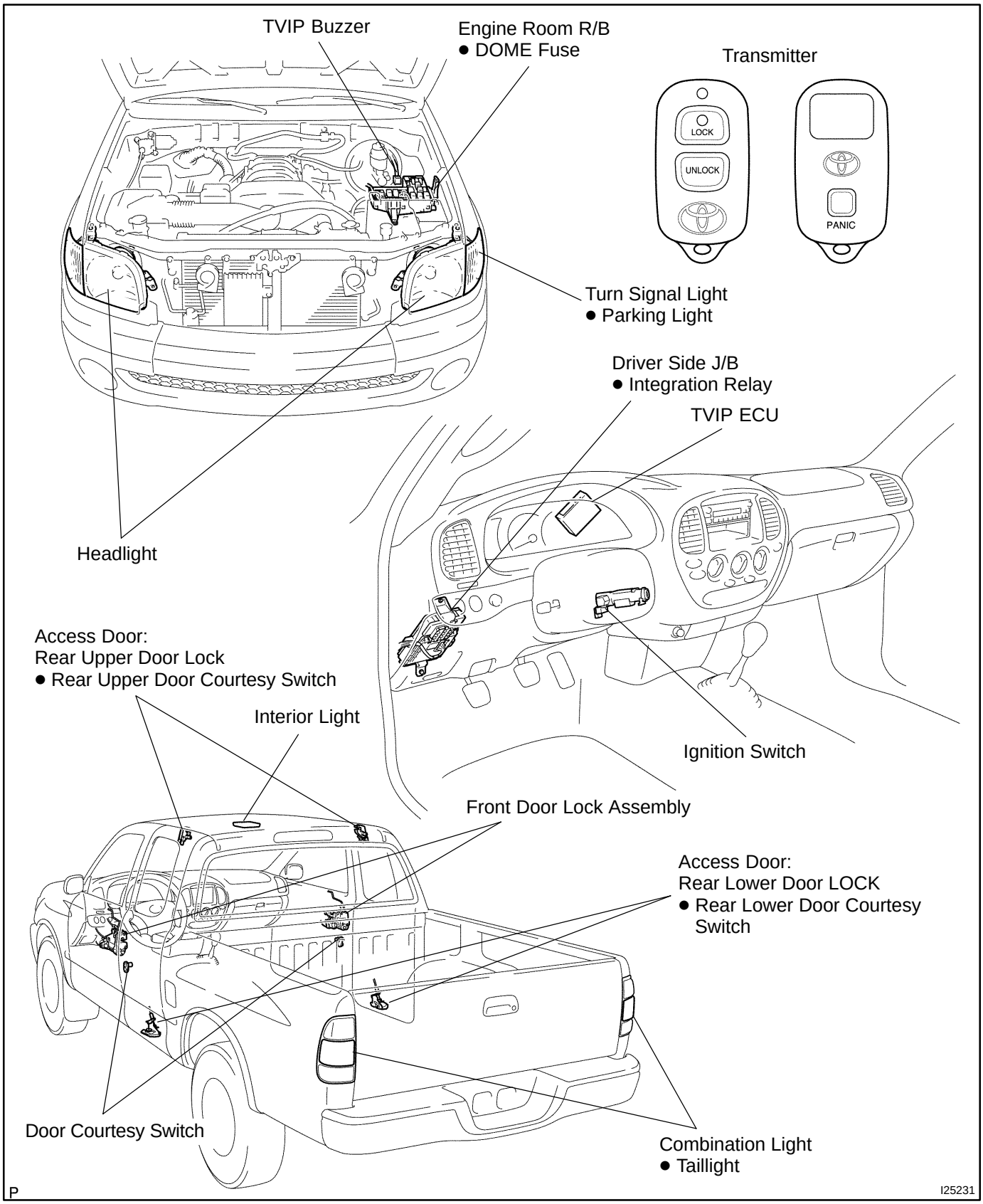

BE2KS−01

ON−VEHICLE INSPECTION

INSPECT WIRELESS DOOR LOCK CONTROL FUNCTIONS

HINT:

- The switch described in this text is a switch for transmitting signals which is built into the door control transmitter.
- All the functions listed below must be checked in the remote control operational area.

(a) Put the vehicle under the conditions that allow the wireless control function to be operated (See PRECAUTION on page BE−169).

(b) Check the basic function.

(1) Check whether the LED of the transmitter lights up 3 times when each switch is pressed 3 times.

HINT:

- If the LED does not light up when the switch has been pressed 3 times or more, it may be caused by the dead battery.
- If the switch is held down, the LED blinks continuously.

(2) Check that all the doors lock when the LOCK switch is pressed.

(3) Check that all the doors will be unlocked when the UNLOCK switch is pressed.

HINT:

If the double switch operation is set in the setting mode of a transmitter, the unlock operation is not carried out as specified in step (3) but carried out as follows:

Only the driver's door will be unlocked when the UNLOCK switch is pressed once, and the other door will be unlocked when the UNLOCK switch is pressed again within 3 seconds.

(c) Check the chattering prevention function.

Check that the corresponding operation occurs only once and is not repeated continuously while the switch is held. However, when the switch is operated repeatedly at 1 second intervals, check that the corresponding operation is carried out.

(d) Check the automatic lock function.

(1) Check that all the doors lock automatically as long as none of them have been opened or all the doors have not been locked within approximately 30 seconds after they are unlocked by pressing the UNLOCK switch.

(2) Check that the automatic locking function does not operate when any door has been opened or all of them have been locked within approximately 30 seconds after they are unlocked by pressing the UNLOCK switch.

(e) Check the switch operation fail−safe function.

Check that the doors can not be locked using the switch while the key is in the ignition key cylinder. However, this does not apply when the system is in the recognition code registration mode.

(f) Check the operation stop function when a door is open or not completely closed.

Check that the doors are not locked by the switch while any door is open or not completely closed.

(g) Check the repeat function.

Check that all the doors attempt to automatically lock once again in 2 seconds after the LOCK switch has been pressed while the movement of the driver side door control knob is being restricted while in the unlocked position.

(h) Check the taillights and parking lights flashing and TVIP buzzer chirps functions (answerback).

(1) When the LOCK switch is pressed, check that the lights flash once and buzzer chirps once with the locking of all the doors.

(2) When the UNLOCK switch is pressed, check that the lights flash twice and buzzer chirp twice with the unlocking of all the doors.

(i) Check the illuminated entry function.
  (1) When all the doors are locked, pressing the UNLOCK switch causes the interior light (when the light switch is in the DOOR position) to illuminate simultaneously with the unlock operation.
  (2) Check that the interior light fade out in approximately 30 seconds if doors have not been opened.

(j) Check the remote panic alarm function.
Check that the horn sounds and the headlights and taillights flash for 60 seconds by the TVIP alarm function when the PANIC switch is pressed. Also, check that the horn stops sounding and the lights stop flashing when either switch of the transmitter is pressed or any door is either locked or unlocked using the key.

(k) Check the ignition−controlled automatic door lock/unlock function.

HINT:
This function's initial mode is OFF, however the program for this function can be changed using the specified method (see page BE−170).
  (1) Insert the key into the ignition key cylinder and turn the ignition switch to on the ON or START position. Check that all the doors are automatically locked.
  (2) Turn the key back to the ACC or LOCK position, and check that all the doors automatically unlocked.

WIRELESS DOOR LOCK CONTROL SYSTEM (Except Double Cab)

BE2KQ–01

PRECAUTION

NOTICES WHEN CHECKING

(a) Power door LOCK/UNLOCK function:
The wireless remote control function operates only when the following 3 conditions are met.
(1) No key is inserted into the ignition key cylinder.
(2) All the doors are closed (Door open indicator off).
(3) The power door lock system operates normally.

HINT:
The UNLOCK function operates even when any door is open.

(b) Remote panic function:
The wireless remote control function operates only when the following condition is met.
No key is inserted into the ignition key cylinder.

(c) The wireless door lock remote control operational area differs depending on the situation.
(1) The operational area differs depending on the operators and the ways the transmitter is held.
(2) In certain areas, the remote control function will only operate partially for the operational area will be reduced due to the vehicle body shape and the influence of the surrounding environment.
(3) Since the transmitter uses faint electric waves, strong electric waves or noise in the frequency used may reduce the operational area or the remote control may not function.
(4) When the battery weakens, the operational area is reduced or the remote control may not function.

HINT:
If the door control transmitter has been left in a place that is exposed to direct sunlight, such as on the instrument panel, it may cause the battery to weaken or cause other such problems.

BE2KR−01

REGISTRATION PROCEDURE

1. REGISTER RECOGNITION CODE

HINT:

- Register the recognition code when replacing the door control transmitter and/or TVIP ECU.
- The add mode is used to retain the registered recognition codes while a new recognition code is additionally registered. This mode is used when a new transmitter is added. If the number of the registered codes exceeds 4, the registered codes will be correspondingly erased in order, starting from the oldest code.
- The rewrite mode is used to erase all the registered recognition codes and register only new recognition codes. This mode is used when the transmitter or the door control receiver is replaced with a for new one.
- The erase mode is used to erase all the registered recognition codes and cancel the wireless door lock function. This mode is used when the transmitter is lost.
- The synchronization mode is used to renew the sequential code (rolling code) of the transmitter and synchronize it with the registered recognition code. This mode is used when the transmitter does not function because they are unsynchronized.*1 Up to 4 transmitters can be synchronized at one time.
- The setting mode is used to set the optional operation via the transmitter that has the recognition code already registered. Double switch operation*2 is available as the option. The setting of up to 4 transmitters can be changed at one time.
- All the following registration procedures must be performed in order continuously.

*1: If a switch on the transmitter is pressed while out of range of the TVIP ECU, the system will not be able to synchronize the sequential code (rolling code) with the registered recognition code. At this time, the system will automatically synchronize them; however automatic synchronization can be performed only 500 times. Therefore, it is necessary to use this mode after they have synchronized 500 times.

*2: Double switch operation is a operation to unlock the door: when the UNLOCK switch is pressed once, only the driver’s door will be unlocked; and when the UNLOCK switch is pressed again within 3 seconds, the other doors will be unlocked.

Flow Chart of Recognition Code Registration

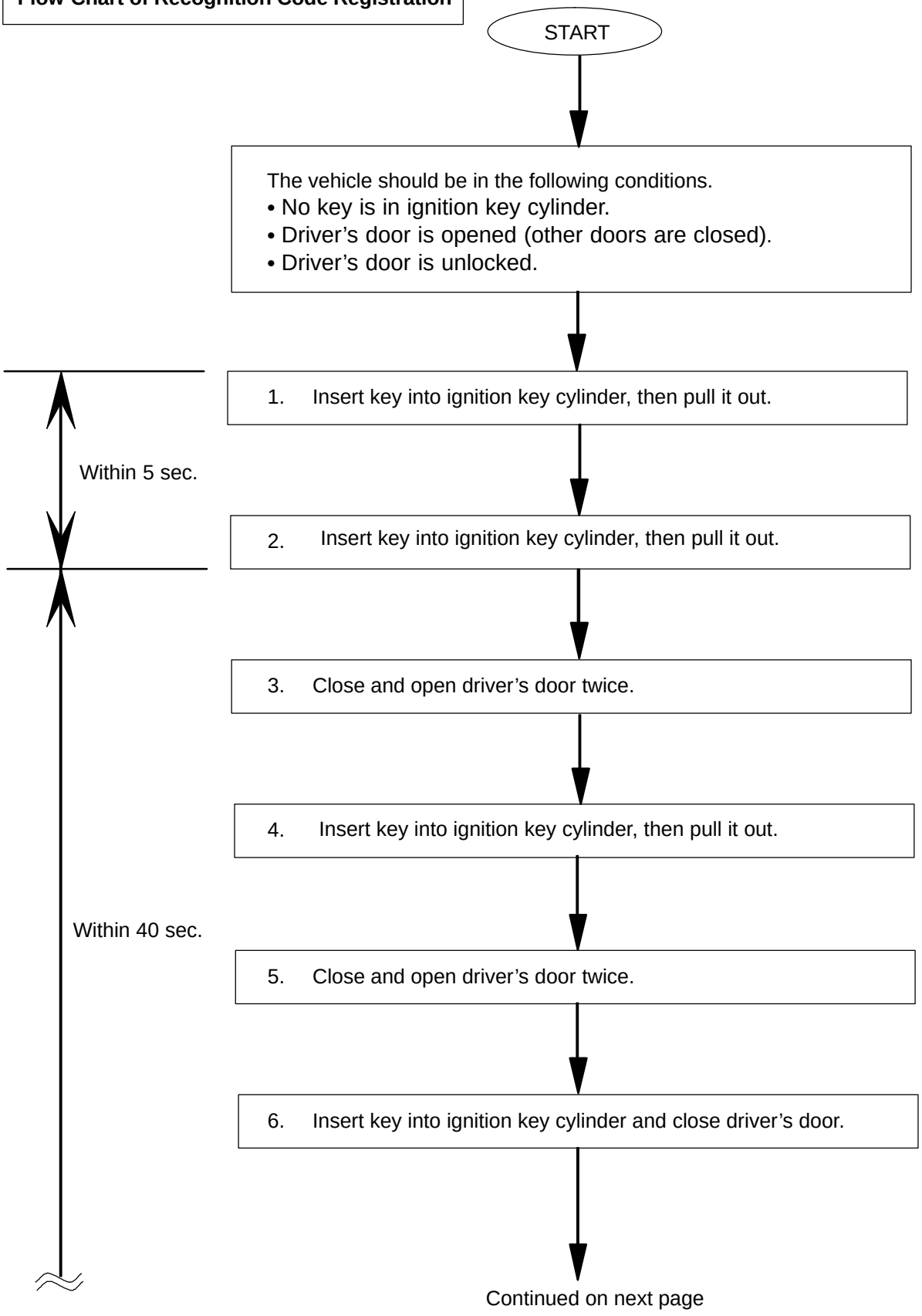

Continued on next page

Continued from previous page

Within 40 sec.

Mode Selection:

7. Turn ignition switch from LOCK to ON and back to LOCK at approximately 1 second interval 1 to 6 times to select a mode.

Number of ON−LOCK operation of ignition switch:

Add Mode

ON−LOCK operation: 1 time

T1: Approx. 1 sec.

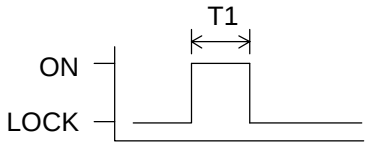

Rewrite Mode

ON−LOCK operation: 2 times

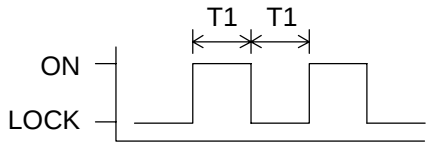

Setting Mode

ON−LOCK operation: 4 times

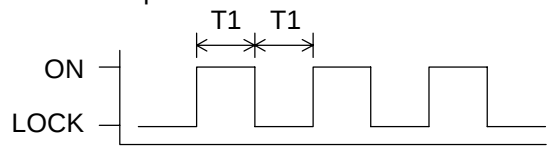

Erase Mode

ON−LOCK operation: 5 times

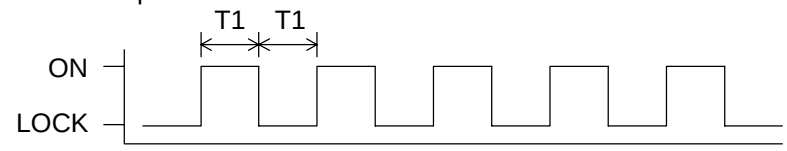

Synchronization Mode

ON−LOCK operation: 6 times

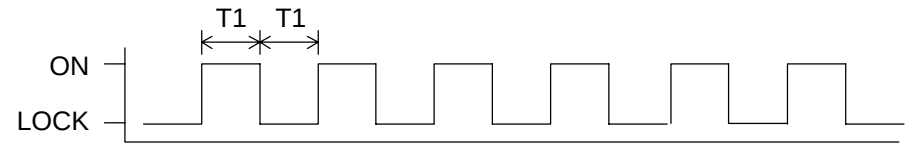

If the number of ON−LOCK operation of ignition switch is 0, 3 or 7 or more, there will be no response (power door lock and unlock operation) to inform which mode has been selected.

Continued on next page

Continued from previous page

8. Remove key from ignition key cylinder.

Response of selected mode (Power door lock operation):

TVIP ECU automatically performs power door LOCK−UNLOCK operation to inform which mode has been selected. In response to LOCK−UNLOCK operation, taillights blink and TVIP buzzer chirps.

Add Mode

LOCK−UNLOCK operation: 1 time

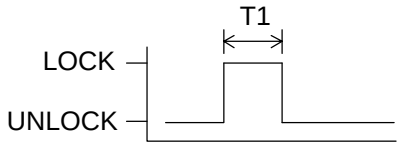

T1: Approx. 1 sec.

Rewrite Mode

LOCK−UNLOCK operation: 2 times

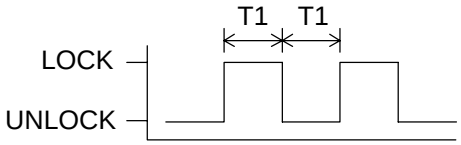

Setting Mode

LOCK−UNLOCK operation: 4 times

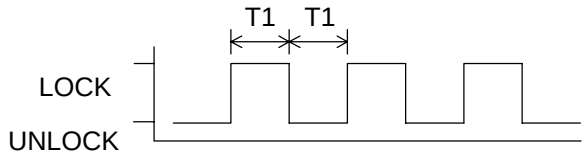

Within 2 sec.

Erase Mode

LOCK−UNLOCK operation: 5 times

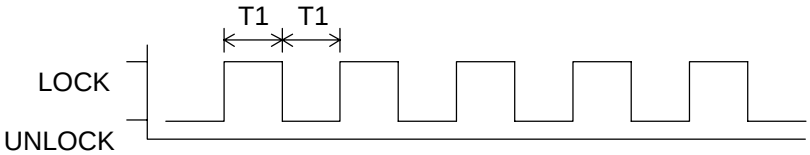

Synchronization Mode

LOCK−UNLOCK operation: 6 times

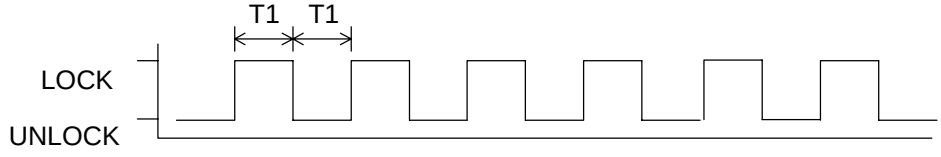

Add, Rewrite, Setting or Synchronization Mode

Erase Mode

Continued on next page

Registration procedure is completed.

Continued from previous page

9. Press LOCK and UNLOCK switches on transmitter simultaneously for 1.0 to 1.5 seconds.

Add, Rewrite or Synchronization Mode

Setting Mode

w/o Double switch operation

w/ Double switch operation

Within 40 sec.

10: Press LOCK switch for more than 1.0 second.

10: Press UNLOCK switch for more than 1.0 second.

10: Press LOCK switch for more than 1.0 second.

Response for registration completion:

TVIP ECU automatically performs power door LOCK−UNLOCK operation to inform which mode has been selected. In response to LOCK−UNLOCK operation, taillights blink and TVIP buzzer chirps.

Within 2 sec.

LOCK−UNLOCK Occurs Once

Registration of recognition code has been completed.

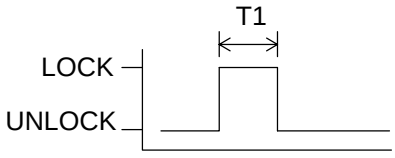

LOCK−UNLOCK Occurs Twice

Registration of recognition code has failed.

HINT:

If TVIP ECU receives recognition code that has not been registered in synchronization mode, registration of recognition code will fail.

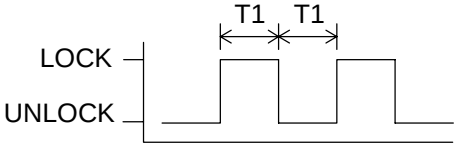

T1: Approx. 1 sec.

Proceed with flow chart to finish registration.

Within 40 sec.

If another transmitter is to be registered.

HINT:

4 types of recognition codes can be registered at one time.

Open driver's door.

Registration of recognition codes (add, rewrite, setting or synchronization mode) is completed.

2. PROGRAM IGNITION–CONTROLLED AUTOMATIC DOOR LOCK/UNLOCK FUNCTION

HINT:

- With this function on, when the key is inserted into the ignition key cylinder and turned to the ON or START position, all the doors are automatically locked; and when the key is back to the ACC or LOCK position, all the doors are automatically unlocked.
- This function's initial mode is OFF, however the program for this function can be changed using the following procedures.
- All the following programming procedures must be performed in order continuously.

Flow Chart for Programming Ignition–controlled Automatic Door Lock/Unlock Function

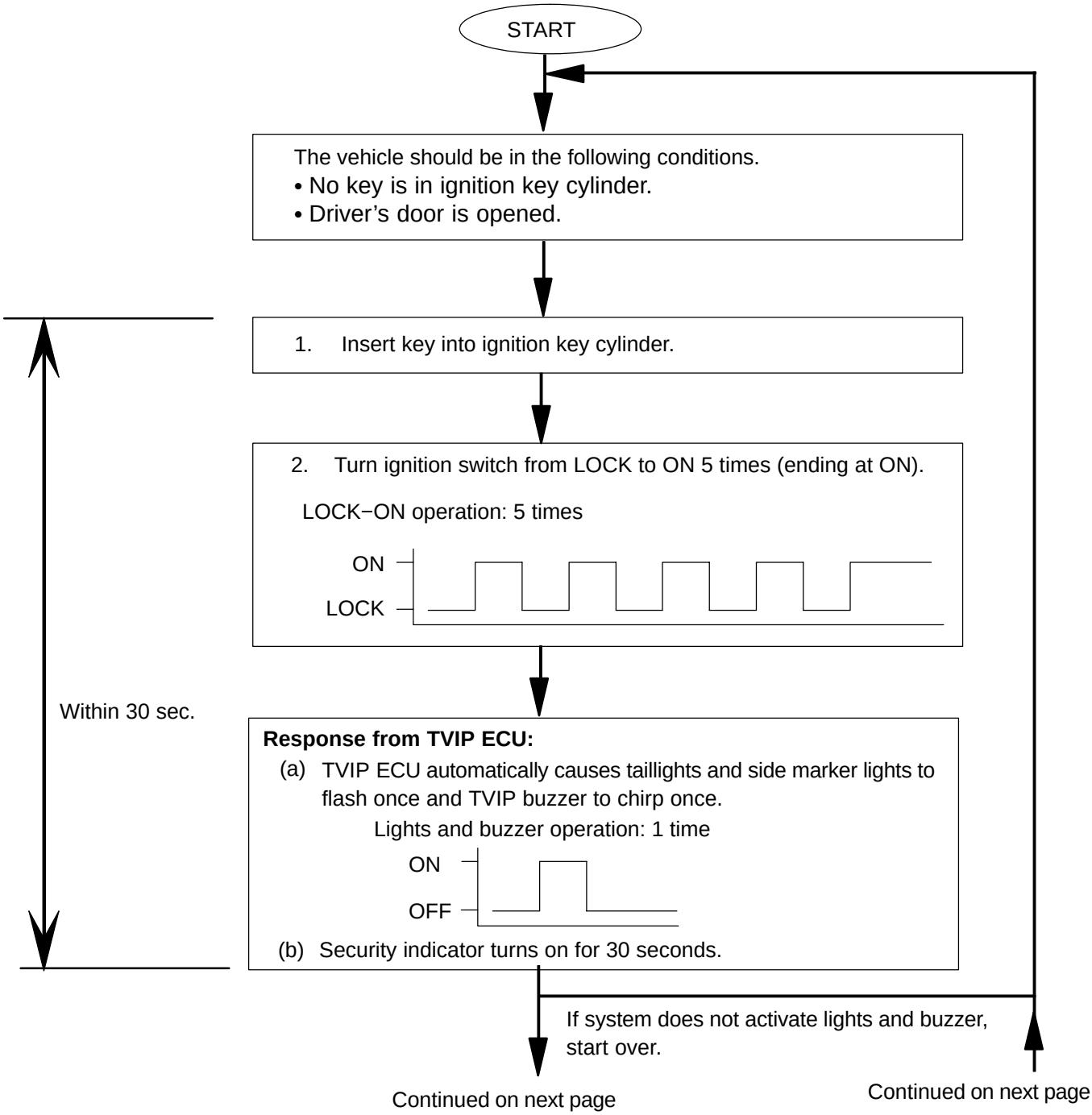

Continued from previous page

Continued from previous page

Mode Selection:

Ignition−controlled door locks ON

3−1. Close driver's door.

OPEN−CLOSE operation: 1 time

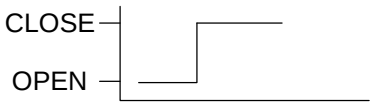

Ignition−controlled door locks OFF

3−2. Close, then open and close driver's door again.

OPEN−CLOSE operation: 2 time

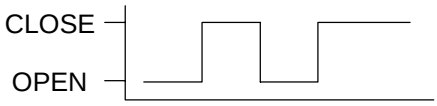

4. Turn ignition key back to LOCK.

Response of selected mode:

TVIP ECU automatically causes taillights and side marker lights to flash once and TVIP buzzer to chirp once.

Ignition−controlled door locks ON

Lights and buzzer operation: 1 time

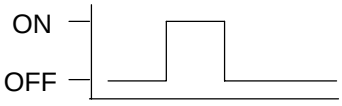

Ignition−controlled door locks OFF

Lights and buzzer operation: 2 time

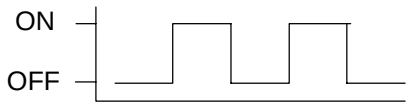

If system does not activate lights and buzzer, start over.

Programming is completed.

BE2KV−01

REPLACEMENT

1. REMOVE TRANSMITTER BATTERY

NOTICE:

Special caution should be taken for handling each component as they are precision electronic components.

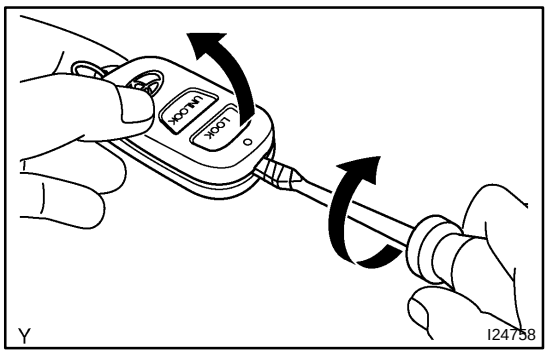

(a) Using a screwdriver, open the transmitter case.

NOTICE:

Do not forcibly pry out the cover.

(b) Remove the battery (lithium battery).

NOTICE:

- **Do not push the terminals with your finger.**
- **Prying up the batteries (lithium battery) to forcibly remove it will cause deformation of the terminals.**
- **Do not touch the battery with wet hands. Water may cause unexpected rust.**
- **Do not touch or move any components inside the transmitter as it may interfere with proper operation.**

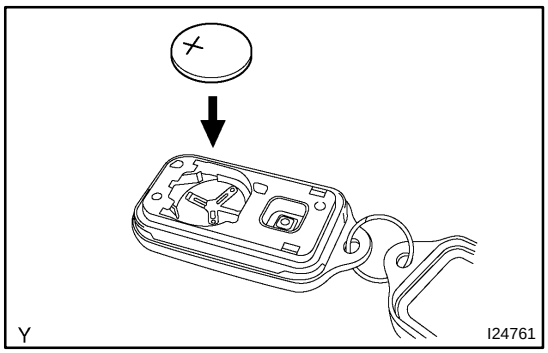

2. INSTALL TRANSMITTER BATTERY

(a) Install a new battery (lithium battery) with the positive (+) side up, as shown in the illustration.

NOTICE:

- **Be sure that the positive side and the negative side of the transmitter battery are matched−up correctly.**
- **Be careful not to bend the electrode of the transmitter battery insertion.**
- **Be careful that dust or oil does not adhere to the transmitter case.**

(b) Check that the rubber cover is not distorted or slipped off, and install the cover.

NOTICE:

Any damage might cause faulty contact of battery (lithium battery) and terminals.

BO2EP−02

ADJUSTMENT

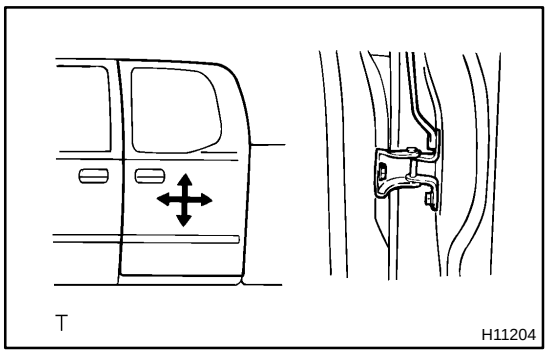

1. ADJUST DOOR IN FORWARD/REARWARD AND VERTICAL DIRECTIONS

Adjust the door by loosening the body side hinge bolts.

Torque: 23 N·m (235 kgf·cm, 17 ft·lbf)

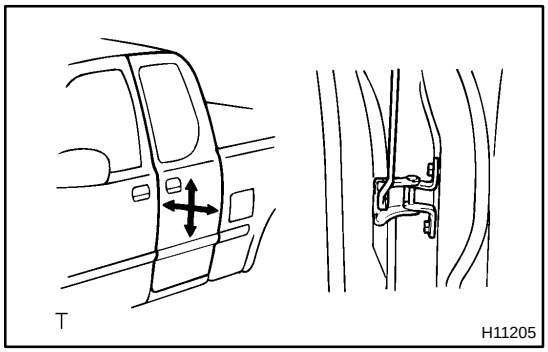

2. ADJUST DOOR IN LEFT/RIGHT AND VERTICAL DIRECTIONS

Adjust the door by loosening the door side bolts.

HINT:

Substitute the standard bolt for the centering bolt (see page BO−7).

Torque: 23 N·m (235 kgf·cm, 17 ft·lbf)

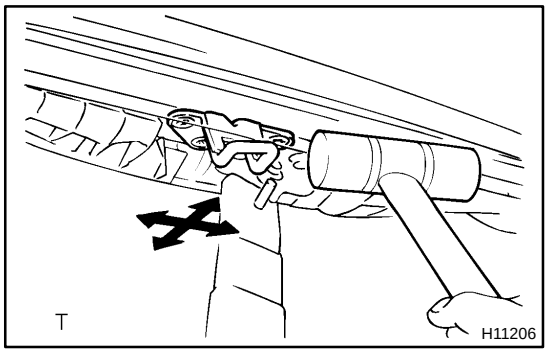

3. ADJUST DOOR LOCK UPPER STRIKER

(a) Check that the door fit and door lock linkages are adjusted correctly.

(b) Adjust the striker position by slightly loosening the striker mounting screws and hitting the striker with a hammer.

(c) Tighten the striker mounting screws again.

Torque: 23 N·m (235 kgf·cm, 17 ft·lbf)

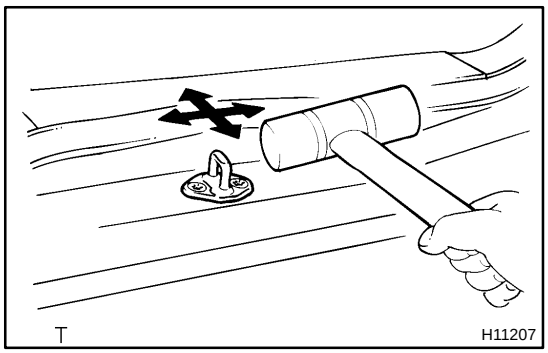

4. ADJUST DOOR LOCK LOWER STRIKER

(a) Check that the door fit and door lock linkages are adjusted correctly.

(b) Adjust the striker position by slightly loosening the striker mounting screws and hitting the striker with a hammer.

(c) Tighten the striker mounting screws again.

Torque: 23 N·m (235 kgf·cm, 17 ft·lbf)

ACCESS DOOR

COMPONENTS

BO2EN−02

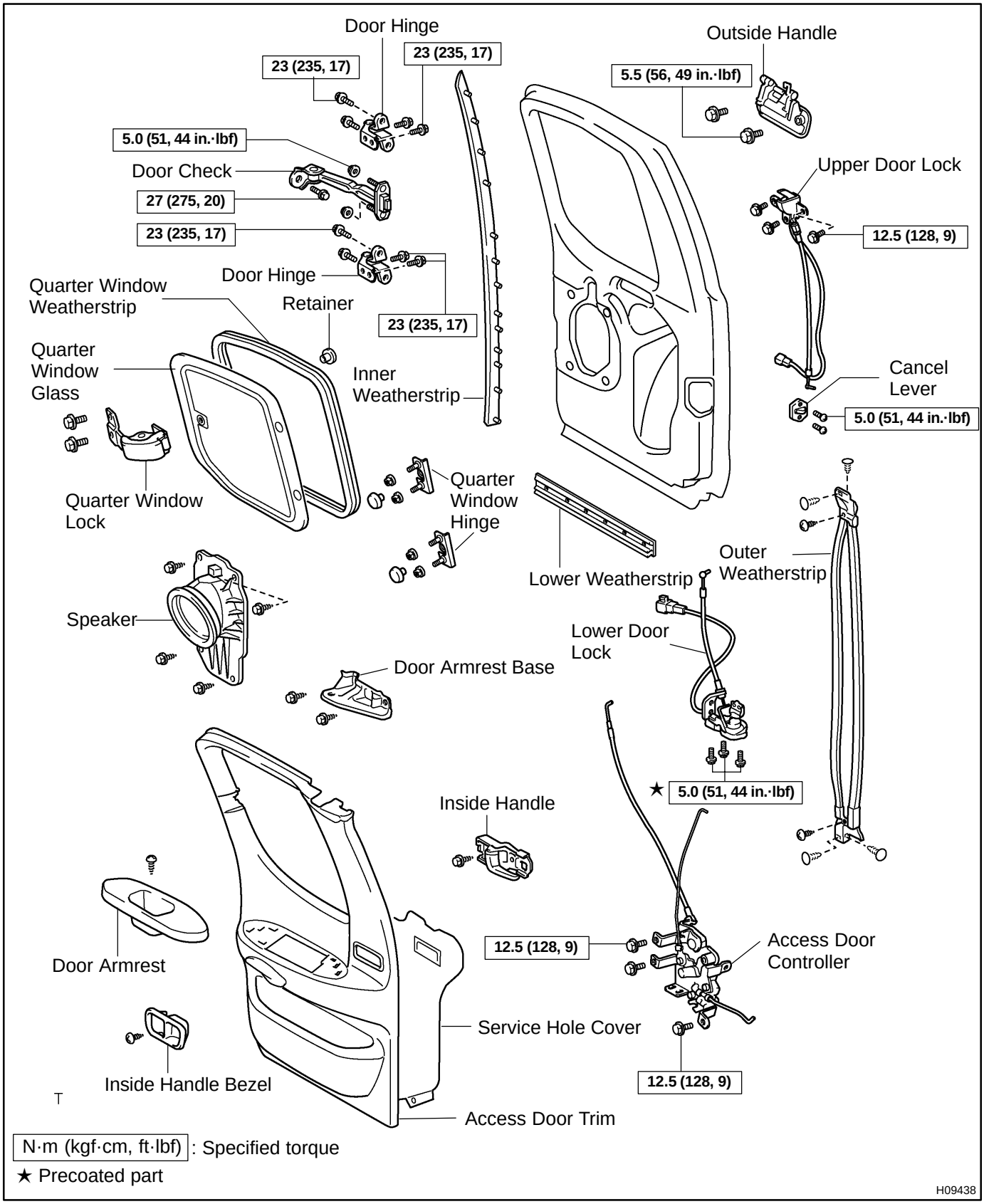

BO2EO−03

DISASSEMBLY

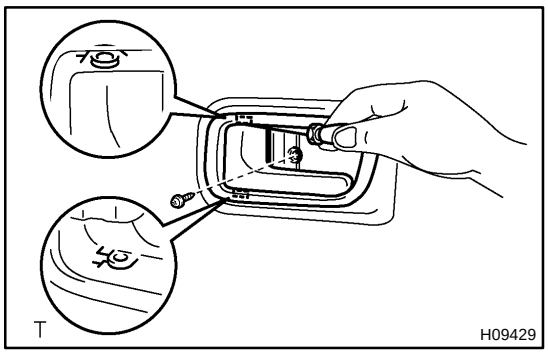

HINT:

A bolt without a torque specification is shown in the standard bolt chart (see page SS−2).

1. REMOVE DOOR INSIDE HANDLE BEZEL

(a) Remove the screw.

(b) Using a screwdriver, remove the door inside handle bezel.

HINT:

Tape the screwdriver tip before use.

2. REMOVE DOOR ARMREST

(a) Remove the screw.

(b) Using a screwdriver, remove the door armrest.

HINT:

Tape the screwdriver tip before use.

3. REMOVE ACCESS DOOR TRIM

(a) Release the quarter window lock.

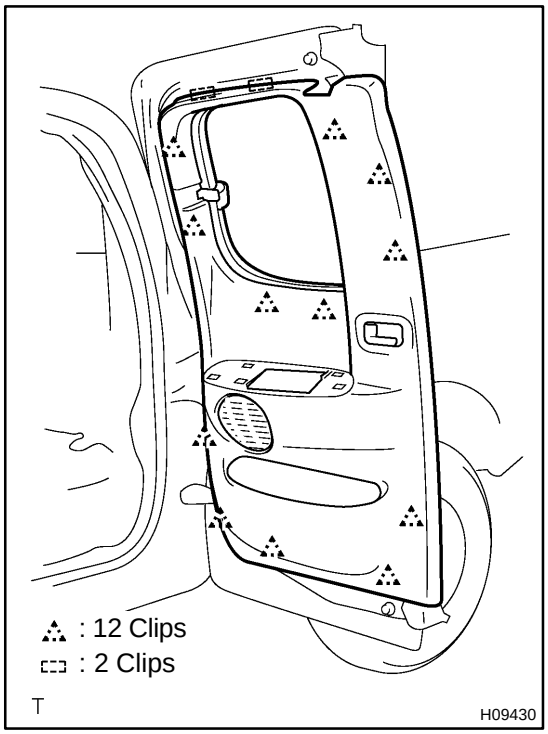

(b) Insert a screwdriver between the door trim and door panel to remove the door trim.

HINT:

Tape the screwdriver tip before use.

4. REMOVE DOOR ARMREST BASE

Remove the 2 screws and door armrest base.

5. REMOVE SPEAKER

(a) Disconnect the connector.

(b) Remove the 4 screws and speaker.

6. REMOVE DOOR INSIDE HANDLE

(a) Remove the screw and slide the inside handle forward.

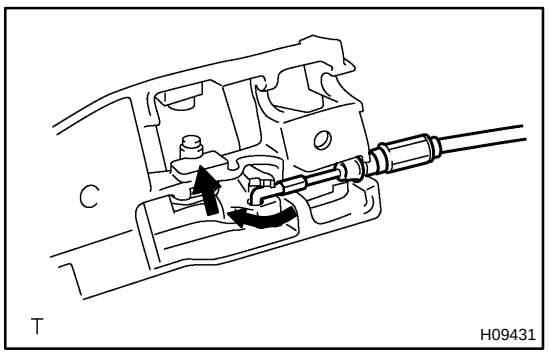

(b) Disconnect the cable as shown in the illustration.

7. REMOVE SERVICE HOLE COVER

(a) Disconnect the connector.

(b) Remove the service hole cover.

HINT:

Bring out the cable and connector through the service hole cover.

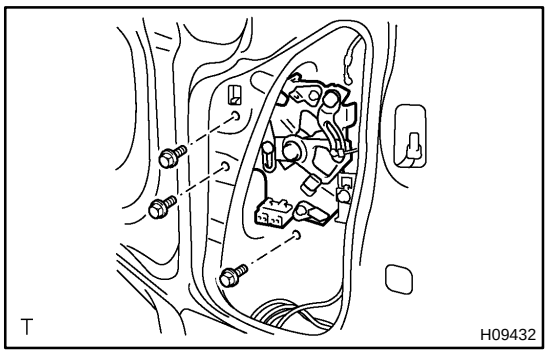

8. REMOVE ACCESS DOOR CONTROLLER

(a) Disconnect the 2 cables and 2 links.

(b) Disengage the 2 clamps.

(c) Remove the 3 bolts and access door controller.

9. REMOVE LOWER DOOR LOCK

(a) Disconnect the connector.

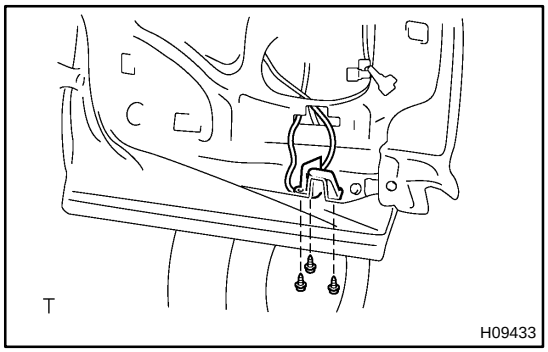

(b) Using a torx® socket wrench, remove the 3 torx® screws and lower door lock.

Torx® socket wrench:
T30 (Part No. 09042−00010 or locally manufactured tool)

10. REMOVE UPPER DOOR LOCK

(a) Disconnect the connector.

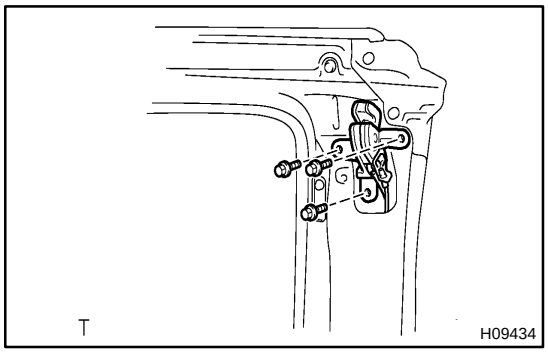

(b) Remove the 3 bolts and upper door lock.

11. REMOVE OUTSIDE HANDLE

Remove the 2 bolts and outside handle.

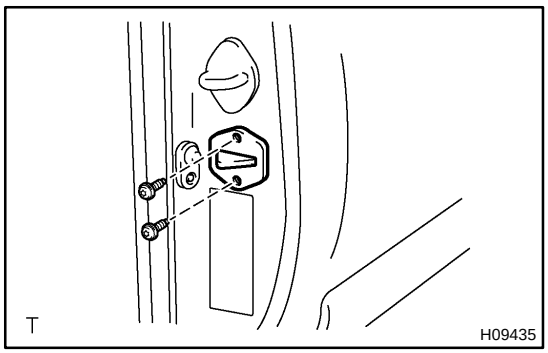

12. REMOVE CANCEL LEVER

Using a torx® socket wrench, remove the 2 torx® screws and cancel lever.

Torx® socket wrench:
T30 (Part No. 09042−00010 or locally manufactured tool)

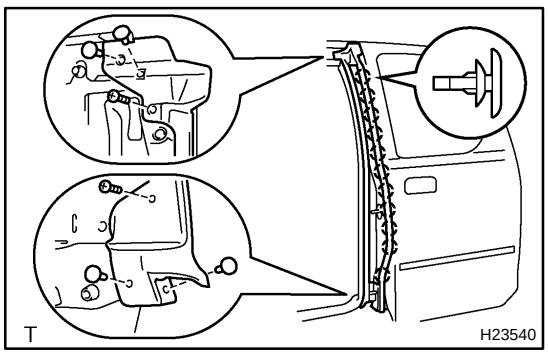

13. REMOVE OUTER WEATHERSTRIP

(a) Remove the 2 screws and 4 clips.

(b) Using a clip remover, remove the outer weatherstrip.

14. REMOVE INNER WEATHERSTRIP

Using a clip remover, remove the inner weatherstrip.

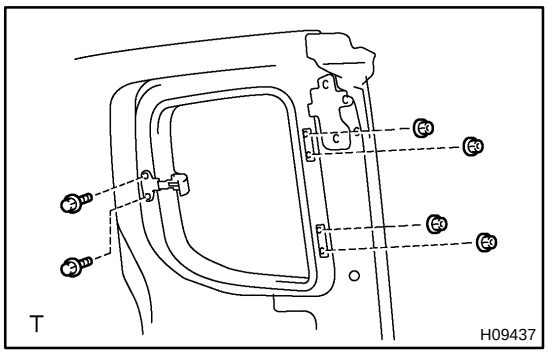

15. REMOVE QUARTER WINDOW AND WEATHERSTRIP

(a) Remove the 2 bolts, 4 nuts and quarter window.

(b) Remove the weatherstrip.

16. REMOVE QUARTER WINDOW LOCK AND HINGES

(a) Remove the screws and window lock from the quarter window.

(b) Remove the 2 screws and 2 hinges from the quarter window.

BO2EQ−03

REASSEMBLY

1. INSTALL QUARTER WINDOW LOCK AND HINGES

(a) Install the 2 hinges to the quarter window with the 2 screws.

(b) Install the window lock to the quarter window with the screw.

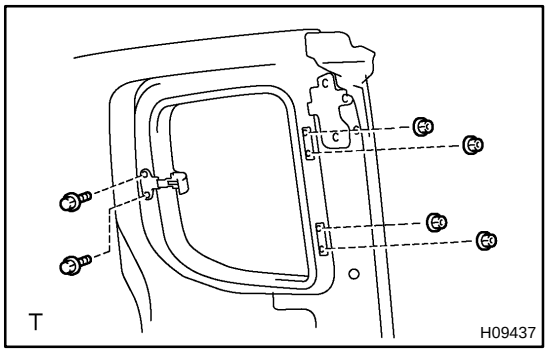

2. INSTALL QUARTER WINDOW AND WEATHERSTRIP

(a) Install the weatherstrip.

(b) Install the quarter window with the 2 bolts and 4 nuts.

3. INSTALL INNER WEATHERSTRIP

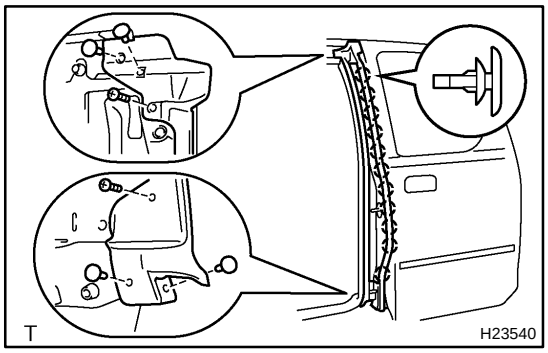

4. INSTALL OUTER WEATHERSTRIP

Install the outer weatherstrip with the 2 screws and 4 clips.

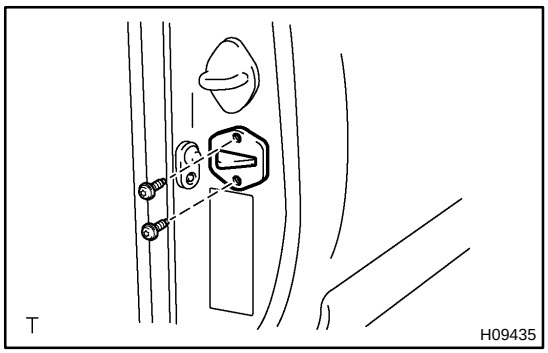

5. INSTALL CANCEL LEVER

Using a torx® socket wrench, install the cancel lever with the 2 torx® screws.

Torx® socket wrench:
T30 (Part No. 09042−00010 or locally manufactured tool)
Torque: 5.0 N·m (51 kgf·cm, 44 in.·lbf)

6. INSTALL OUTSIDE HANDLE

Install the outside handle with the 2 bolts.

Torque: 5.5 N·m (56 kgf·cm, 49 in.·lbf)

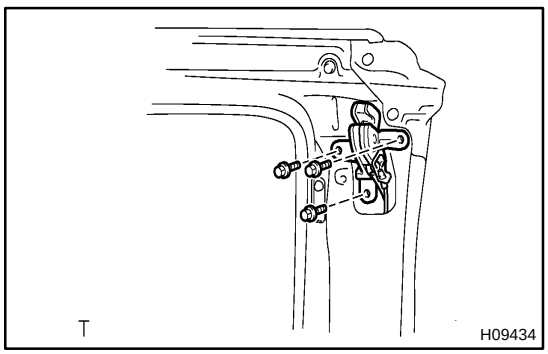

7. INSTALL UPPER DOOR LOCK

(a) Install the upper door lock with the 3 bolts.
Torque: 12.5 N·m (128 kgf·cm, 9 ft·lbf)

(b) Connect the connector.

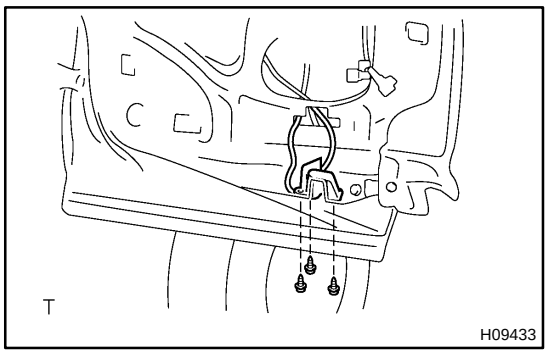

8. INSTALL LOWER DOOR LOCK

(a) Using a torx® socket wrench, install the lower door lock with the 3 torx® screws.
Torx® socket wrench:
T30 (Part No. 09042−00010 or locally manufactured tool)
Torque: 5.0 N·m (51 kgf·cm, 44 in.·lbf)

(b) Connect the connector.

HINT:

Apply adhesive to the 3 torx® screws.
Adhesive: Part No. 08833−00070, THREE BOND 1342 or equivalent

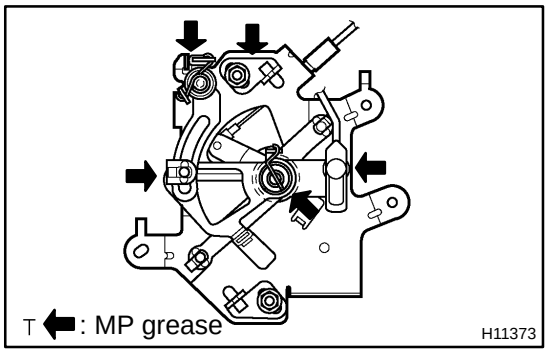

9. INSTALL ACCESS DOOR CONTROLLER

HINT:

Apply MP grease to the sliding and rotating parts of the access door controller.

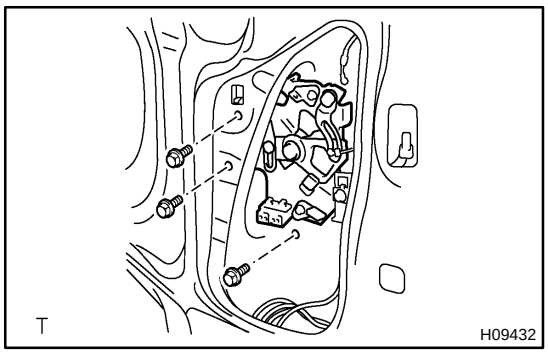

(a) Install the access door controller with the 3 bolts.
Torque: 12.5 N·m (128 kgf·cm, 9 ft·lbf)

(b) Attach the 2 clamps.

(c) Connect the 2 cables and 2 links.

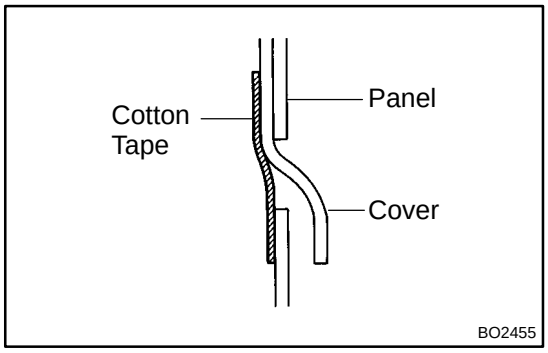

10. INSTALL SERVICE HOLE COVER

(a) Install the service hole cover.

HINT:

- When installing the service hole cover, pull out the cable and connector through the service hole cover.
- There should be no wrinkles or folds after attaching the service hole cover.
- After attaching the service hole cover, confirm the sealing condition.

(b) Connect the connector.

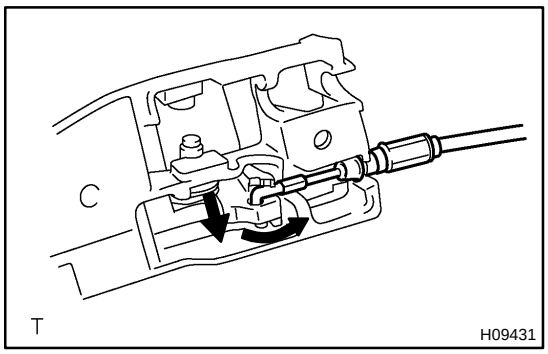

11. INSTALL DOOR INSIDE HANDLE

(a) Connect the cable to the inside handle.

(b) Install the inside handle with the screw.

12. INSTALL SPEAKER

(a) Install the speaker with the 4 screws.

(b) Connect the connector.

13. INSTALL DOOR ARMREST BASE

Install the door armrest base with the 2 screws.

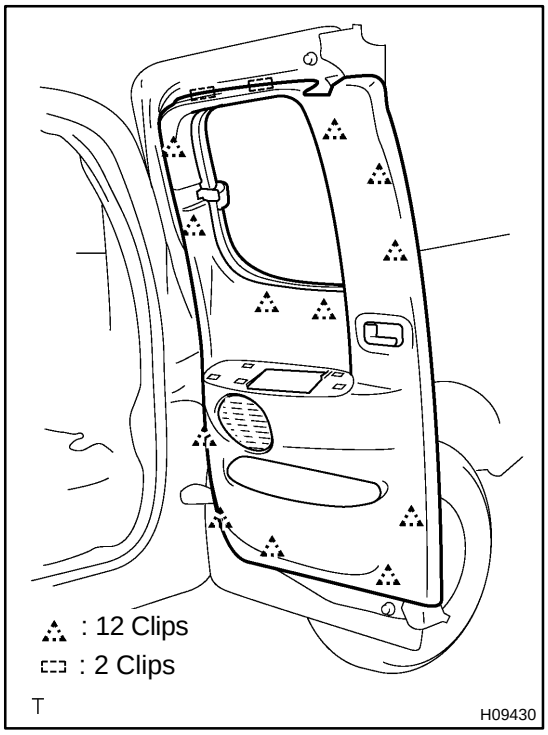

14. INSTALL ACCESS DOOR TRIM

(a) Install the door trim.

(b) Lock the quarter window lock.

15. INSTALL DOOR ARMREST

Install the door armrest with the screw.

16. INSTALL DOOR INSIDE HANDLE BEZEL

Install the door inside handle bezel with the screw.

BODY OUTSIDE MOULDING

COMPONENTS

BO4PZ−01

Standard Cab

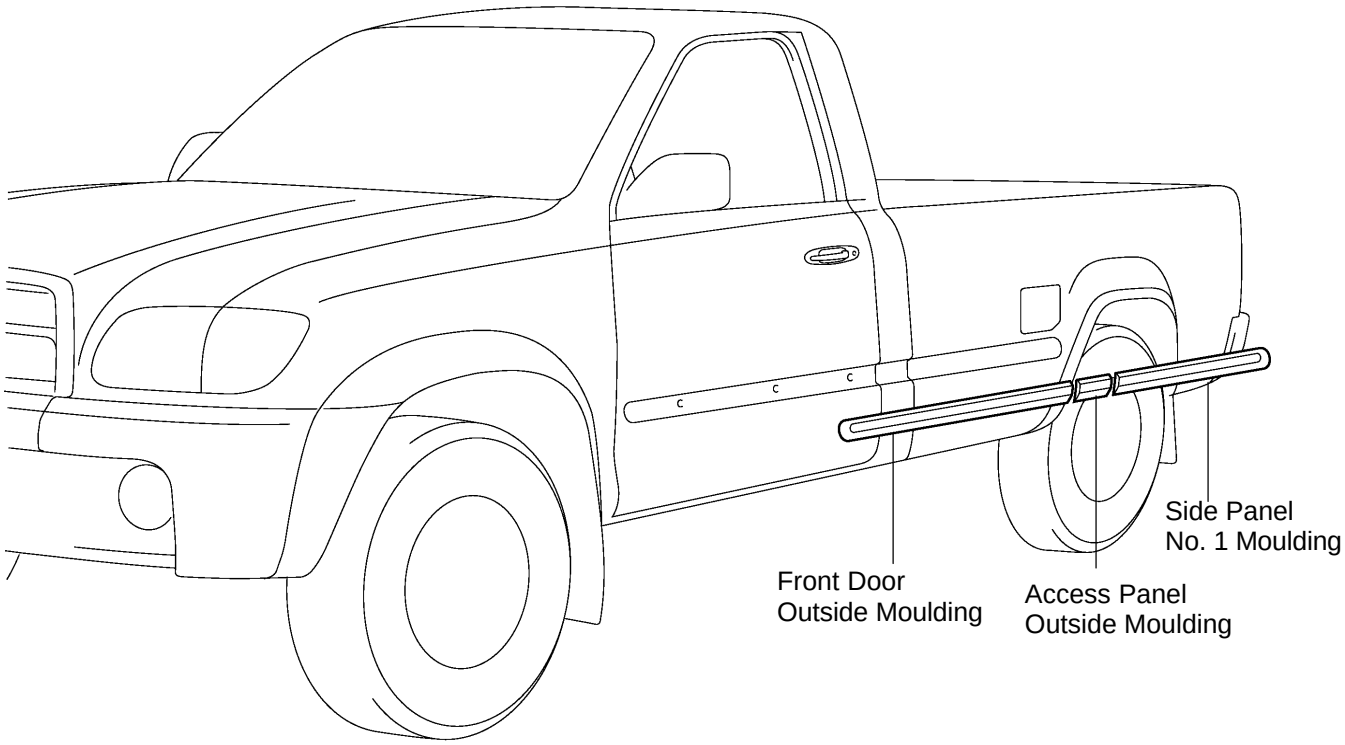

Access Cab (Standard Body Type), Access Cab (Wide Body Type)

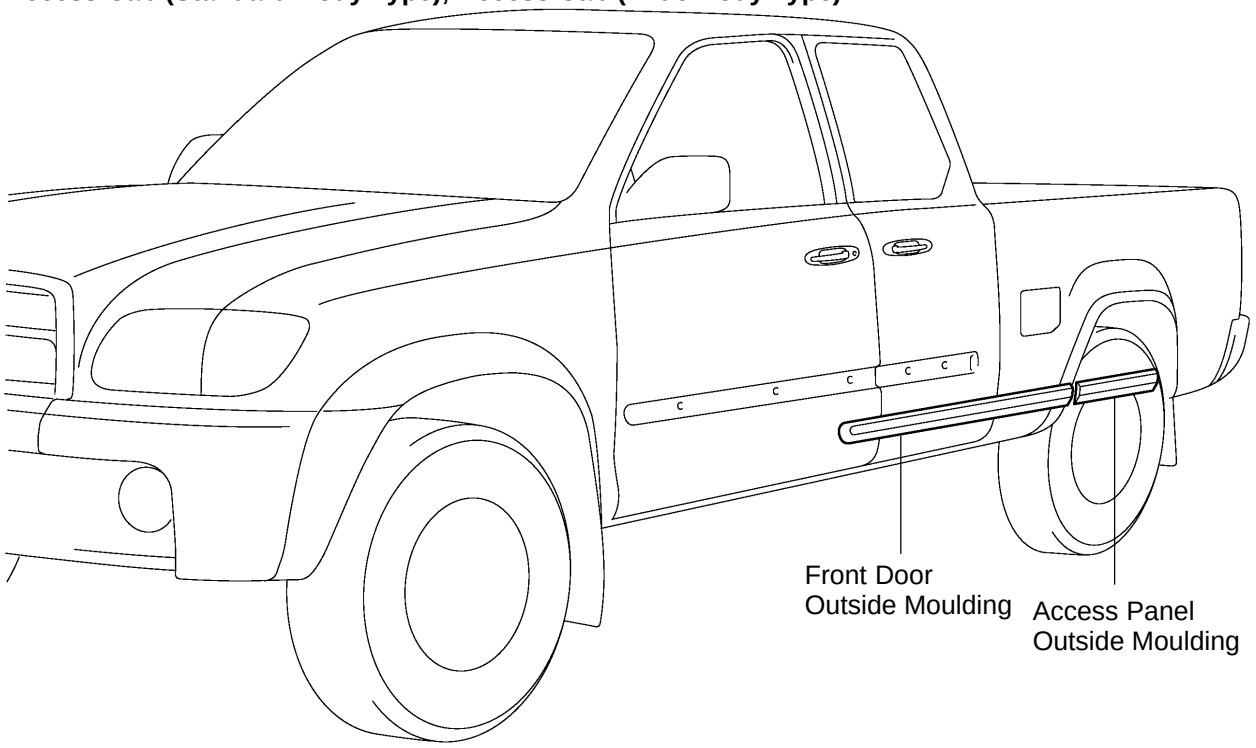

T

B17040

Double Cab

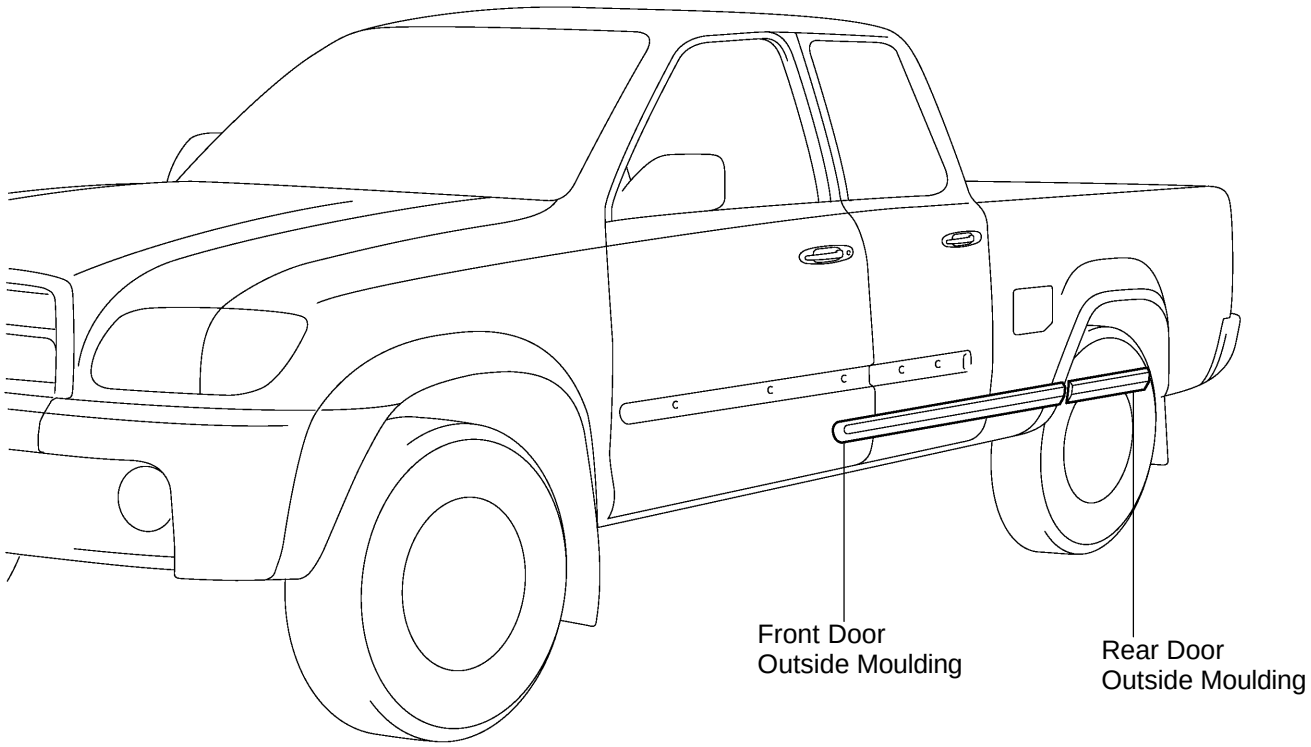

T

B17041

BO4H2−02

INSTALLATION

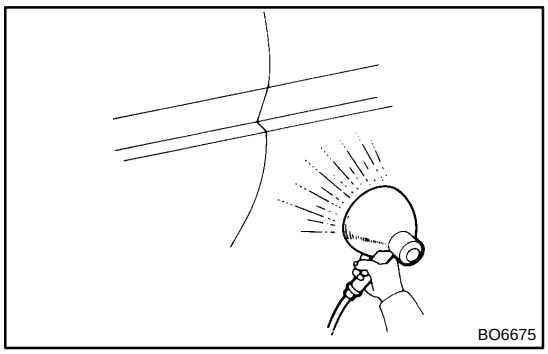

1. CLEAN BODY MOUNTING SURFACE

(a) Using a heat light, heat the body mounting surface between 40 to 60˚C (104 to 140˚F).

NOTICE:

Do not heat the body excessively.

(b) Remove the double−sided tape from the body.

(c) Wipe off the stains with cleaner.

2. INSTALL MOULDING

(a) Using a heat light, heat the body and moulding.

Heating Temperature:

Item	Temperature
Body	40 to 60˚C (104 to 14˚F)
Moulding	20 to 30˚C (68 to 86˚F)

NOTICE:

Do not heat the body and moulding excessively.

(b) Remove the moulding peeling paper from the face of the moulding.

NOTICE:

After removing the peeling paper, keep the exposed adhesive away from dirt and other contaminants.

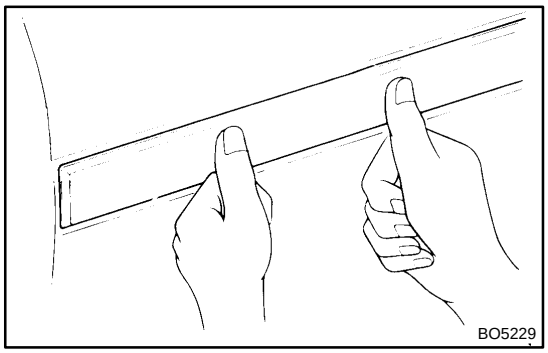

(c) Align the bosses with their corresponding holes on the body, and press the moulding firmly.

NOTICE:

Do not apply excessive force onto the moulding, but steady pressure with your thumbs.

BO2ET−03

REMOVAL

1. HEAT MOULDING

Using a heat light, heat the moulding between 20 to 30˚C (68 to 86 ˚F).

NOTICE:

Do not heat the moulding excessively.

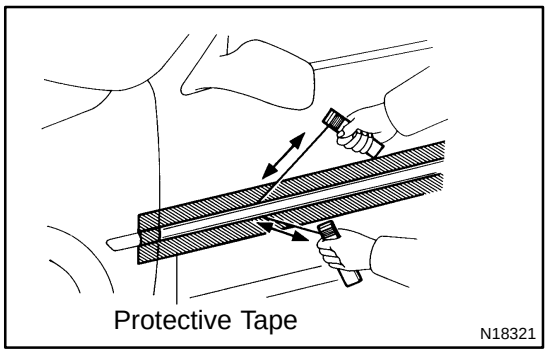

2. REMOVE MOULDING

(a) Insert piano wire between the vehicle body and moulding.

(b) Tie objects that can serve a handle (for example, wooden blocks) to all wire ends.

(c) Cut off the double−sided tape by pulling the piano wire as shown in the illustration.

NOTICE:

Do not damage the body.

(d) Remove the moulding.

BACK WINDOW GLASS

COMPONENTS

BO4H8−02

Fixed Type

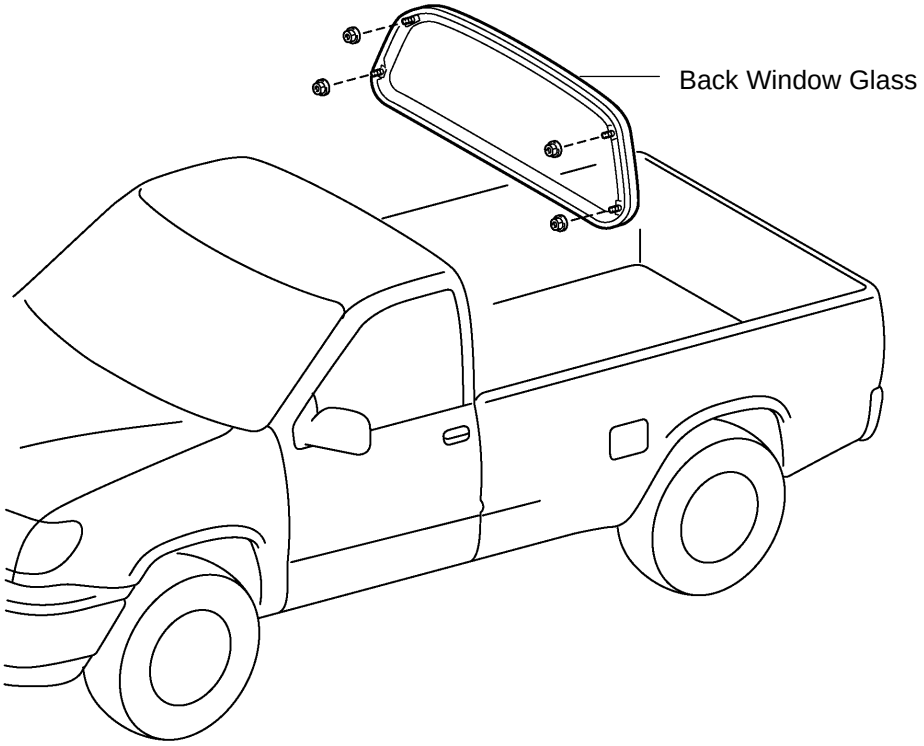

Slide Type

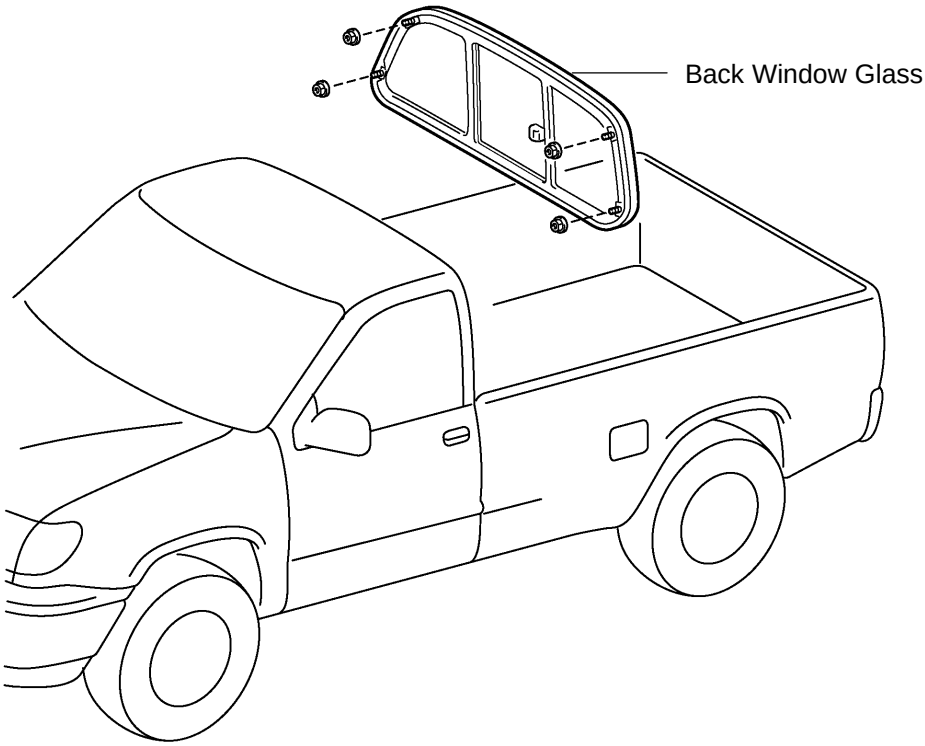

T

H11406

Power Slide Type

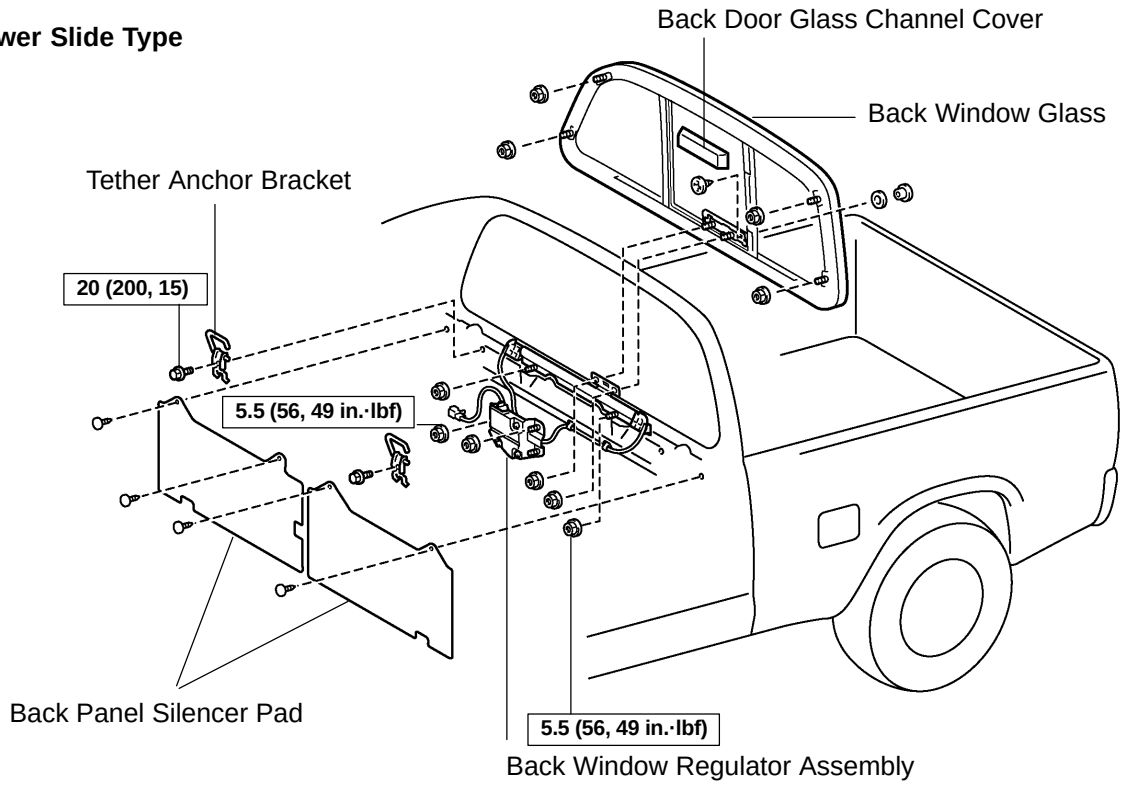

Power Vertical Type

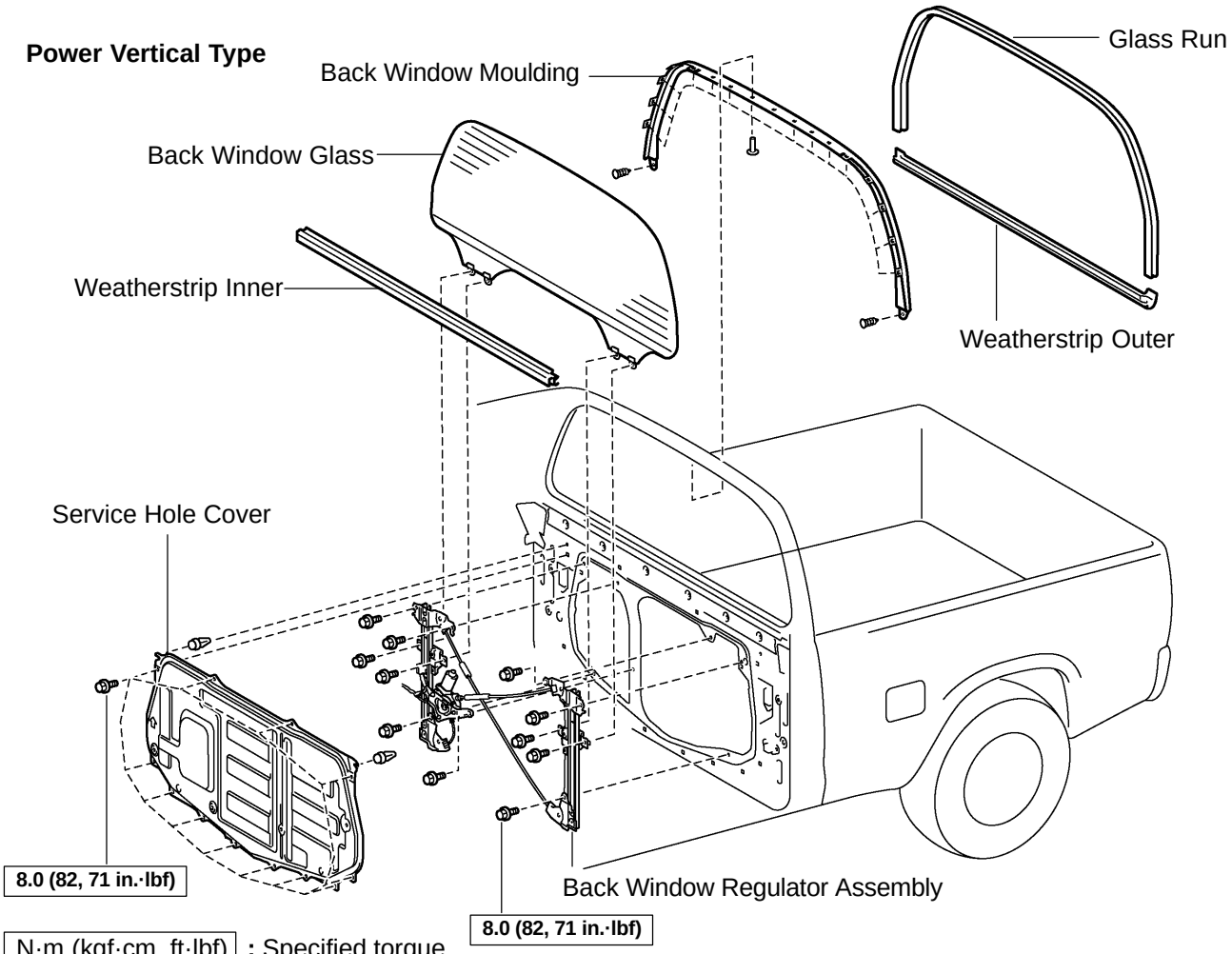

N·m (kgf·cm, ft·lbf) : Specified torque

H22881

BO4Q6−01

INSTALLATION

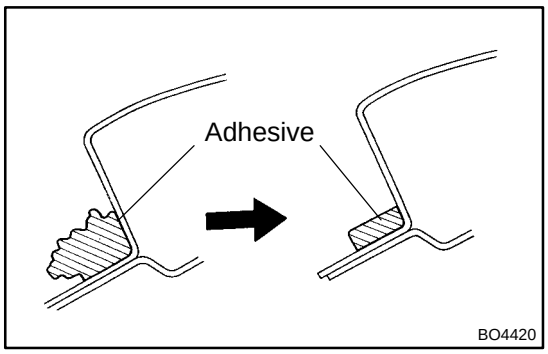

1. Fix type, Slide type, Power slide type:
CLEAN AND SHAPE CONTACT SURFACE OF BODY

(a) Using a knife, cut away any rough adhesive on the contact surface of the body to shape the surface.

HINT:

Leave as much of the adhesive on the body as possible.

(b) Clean the contact surface of the body with a piece of shop rag saturated with cleaner.

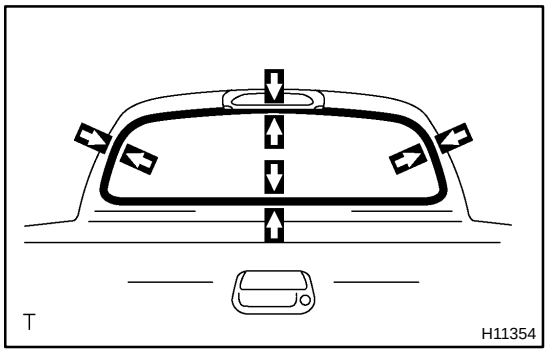

2. Fix type, Slide type, Power slide type:
POSITION GLASS

(a) Place the glass in the correct position.

(b) Check that the whole contact surface of the glass rim is perfectly even.

(c) Place reference marks on the glass and body.

(d) Remove the glass.

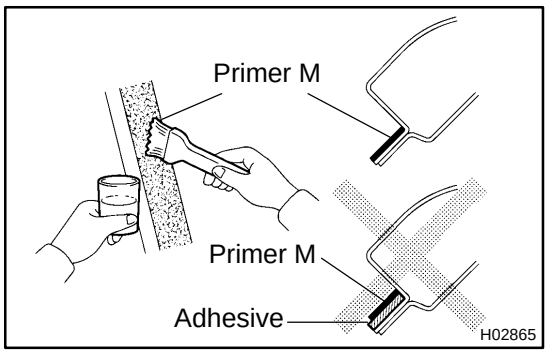

3. Fix type, Slide type, Power slide type:
COAT CONTACT SURFACE OF BODY WITH PRIMER M

Using a brush, coat the exposed part of the body with Primer M.

NOTICE:

- **Allow the primer coating to dry for 3 minutes or more.**
- **Do not apply too much Primer M.**
- **Throw away any leftover Primer M.**

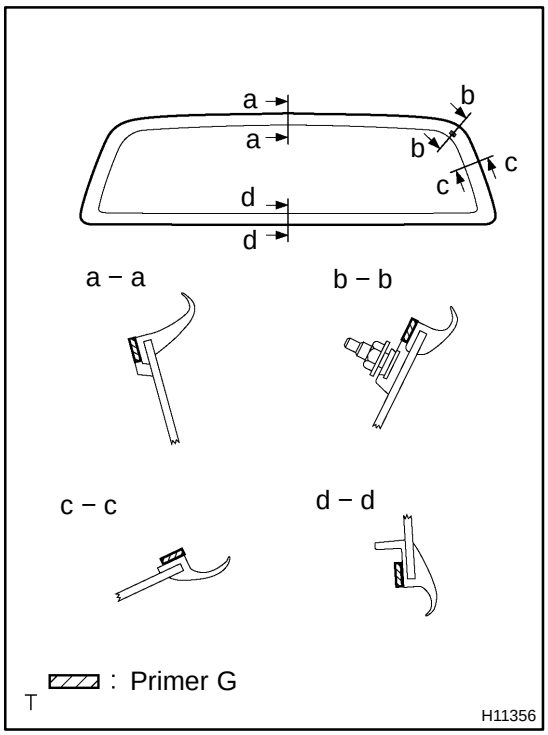

4. Fixed type:
COAT CONTACT SURFACE OF GLASS WITH PRIMER G

Using a brush or sponge, coat the edge of the glass and the contact surface with Primer G as shown in the illustration.

HINT:

If the area other than that specified is coated by accident, wipe off the primer with a clean shop rag before it dries.

NOTICE:

- **Allow the primer coating for 3 minutes or more.**
- **Throw away leftover Primer G.**

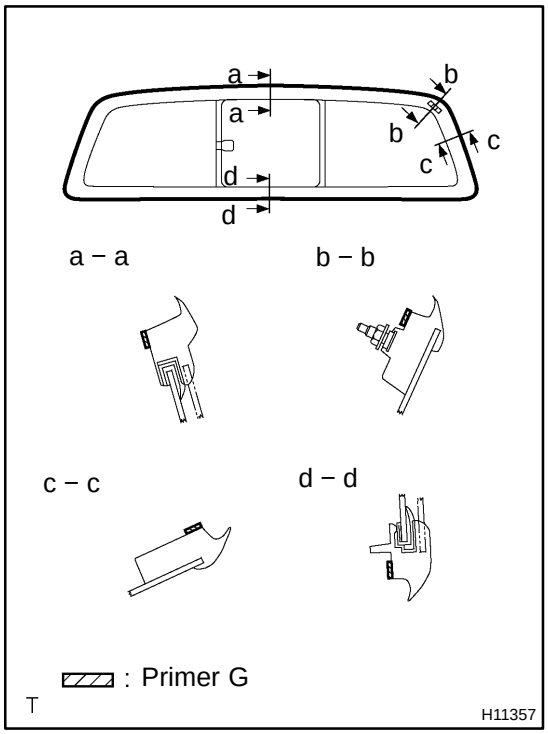

5. Slide type, Power slide type:
COAT CONTACT SURFACE OF GLASS WITH PRIMER G

Using a brush or sponge, coat the edge of the glass and the contact surface with Primer G as shown in the illustration.

HINT:

If the area other than that specified is coated by accident, wipe off the primer with a clean shop rag before it dries.

NOTICE:

- **Allow the primer coating for 3 minutes or more.**
- **Throw away leftover Primer G.**

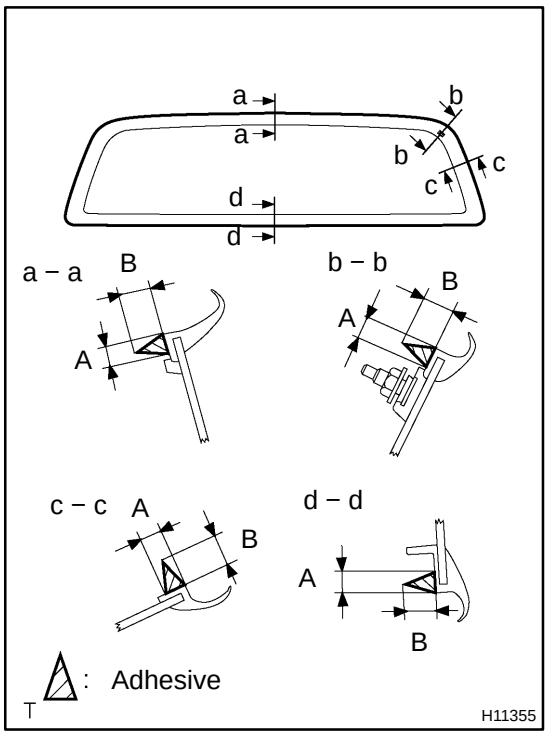

6. Fixed type:
APPLY ADHESIVE

(a) Cut off the tip of the cartridge nozzle.
Adhesive: Part No. 08850−00801 or equivalent

HINT:
After cutting off the tip, use all adhesive within the time described in the table below.

Usage timeframe:

Temperature	Usage Timeframe
35˚C (95˚F)	15 minutes
20˚C (68˚F)	100 minutes
5˚C (41˚F)	8 hours

(b) Load the cartridge into a sealer gun.
(c) Coat the glass with adhesive, as shown in the illustration.
Specification:

Area	Measurement
A	8.0 mm (0.314 in.)
B	12.0 mm (0.472 in.)

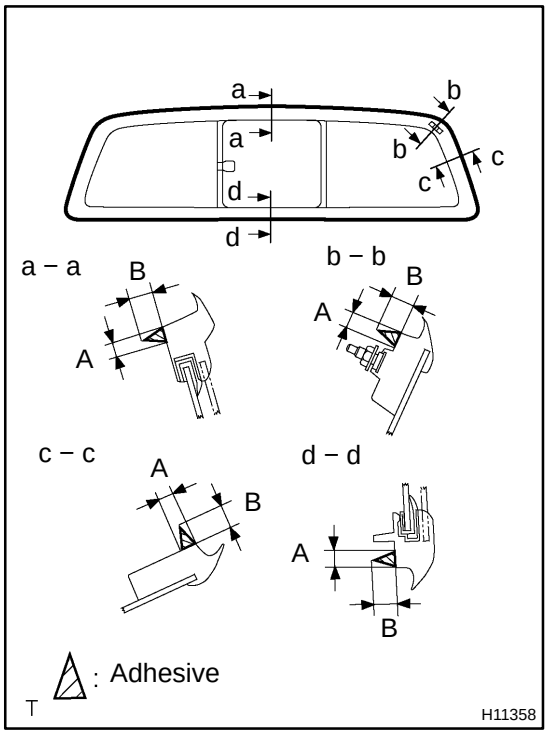

7. Slide type, Power slide type:
APPLY ADHESIVE

(a) Cut off the tip of the cartridge nozzle.
Part No. 08850−00801 or equivalent

HINT:
After cutting off the tip, use all adhesive within the time described in the table below.

Usage timeframe:

Temperature	Usage Timeframe
35˚C (95˚F)	15 minutes
20˚C (68˚F)	100 minutes
5˚C (41˚F)	8 hours

(b) Load the cartridge into a sealer gun.
(c) Coat the glass with adhesive, as shown in the illustration.
Specification:

Area	Measurement
A	8.0 mm (0.314 in.)
B	12.0 mm (0.472 in.)

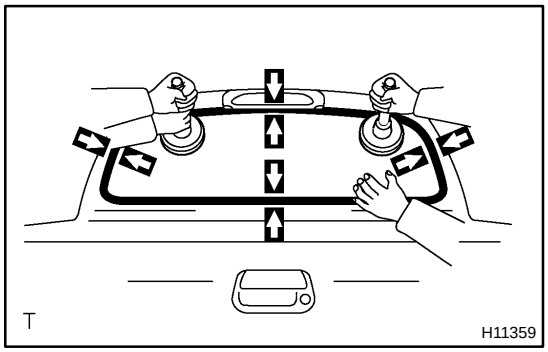

8. Fix type, Slide type, Power slide type:
INSTALL BACK WINDOW GLASS

(a) Position the glass so that the reference marks are aligned, and press it in gently along the rim.
(b) Using a spatula, apply adhesive on the glass rim.
(c) Use a scraper to remove any excess or protruding adhesive.

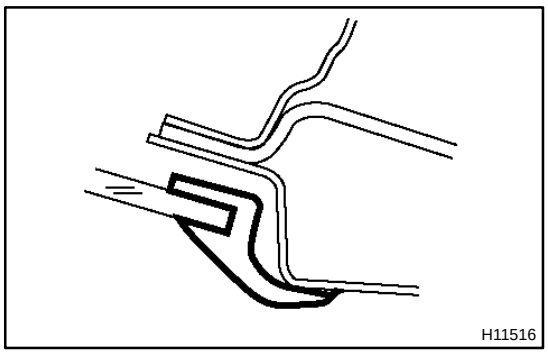

HINT:
Confirm that the moulding is attached to the body panel as shown in the illustration.

(d) Hold the back window glass in place securely with a protective tape or equivalent until the adhesive hardens.

NOTICE:
Take care not to drive the vehicle during the time described in the table below.

Usage timeframe:

Temperature	Usage Timeframe
35 ˚C (95 ˚F)	1.5 hours
20 ˚C (68 ˚F)	5 hours
5 ˚C (41 ˚F)	24 hours

9. INSPECT FOR LEAK AND REPAIR

NOTICE:
Conduct a leak test after the adhesive has completely hardened.

Adhesive: Part No. 08833−00030 or equivalent

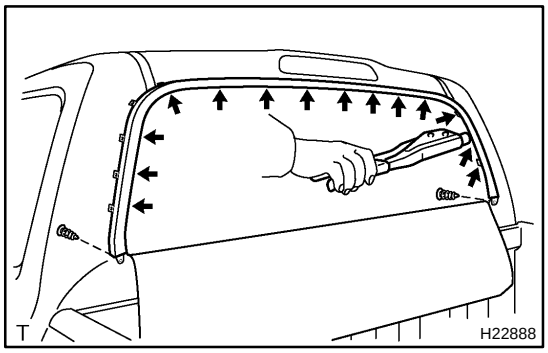

10. Power vertical type:
INSTALL BACK WINDOW MOULDING

(a) Using a hand riveter or an air riveter, install the 14 drive pulley assemblies.

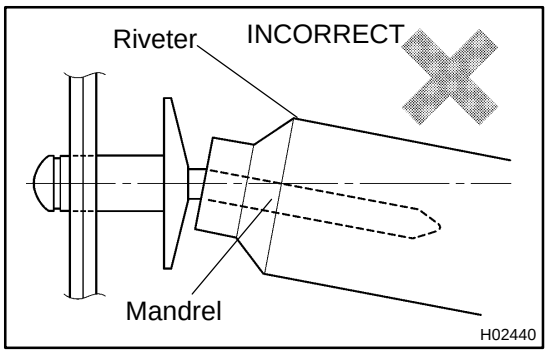

NOTICE:
Do not prize the riveter. The riveter will be damaged and the mandrel will bend.

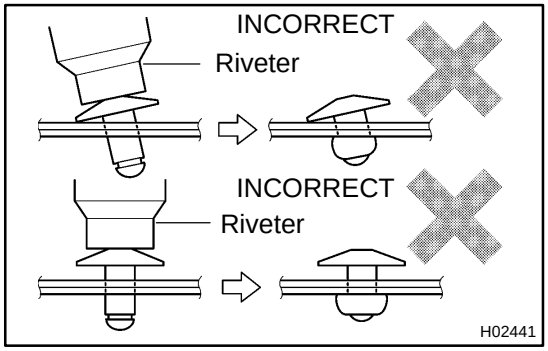

- **Do not tilt the riveter when fastening the rivet to the item(s) as this will cause the rivet to be loose.**
- **Do not have any space between the rivet head and the item(s). The rivet head must be completely flat against the item(s).**

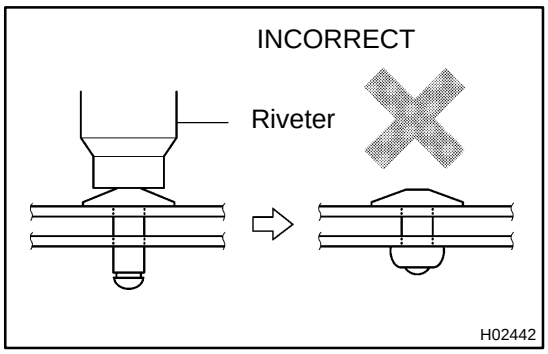

Do not have any space between the items. Firmly hold together the two items while installing the rivet.

(b) Install the 2 clips.

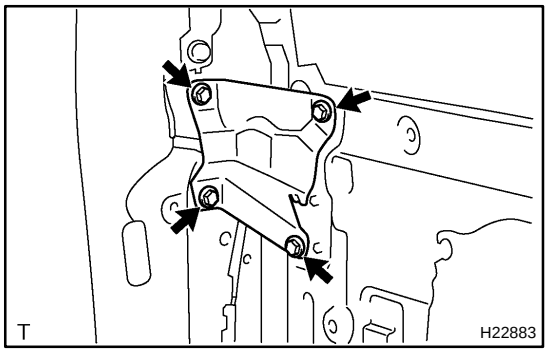

(c) Install the bracket LH and RH with the 8 bolts.

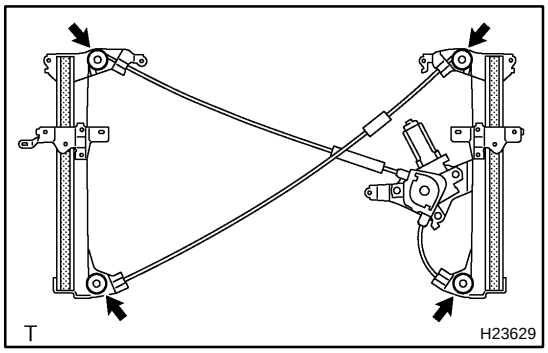

11. Power vertical type:
INSTALL BACK DOOR WINDOW REGULATOR ASSEMBLY

(a) Apply MP grease to the sliding and rotating parts of the window regulator assembly.

NOTICE:

Do not apply grease to the spring of the window regulator assembly.

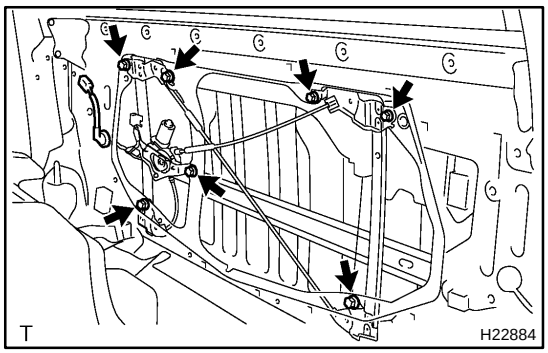

(b) Install the window regulator assembly with the 7 bolts.
Torque: 8.0 N·m (82 kgf·cm, 71 in.·lbf)

(c) Connect the window regulator connector.

NOTICE:

Be careful not to drop and deform the window regulator assembly.

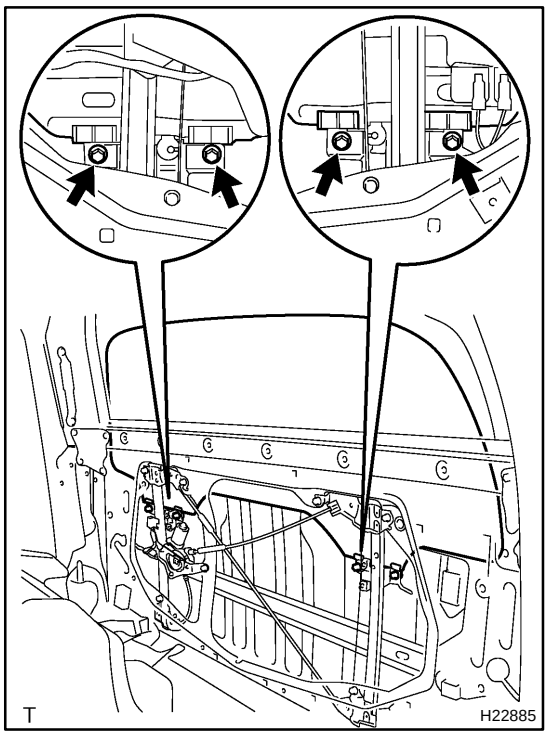

12. Power vertical type:
INSTALL BACK WINDOW GLASS

(a) Install the back window glass to the window regulator assembly with the 4 bolts..

Torque: 8.0 N·m (82 kgf·cm, 71 in.·lbf)

NOTICE:

Do not damage the back window glass sub−assy.

HINT:

Insert a shop rag inside the door panel to prevent the back window glass from being scratched.

(b) Connect the defogger connector.

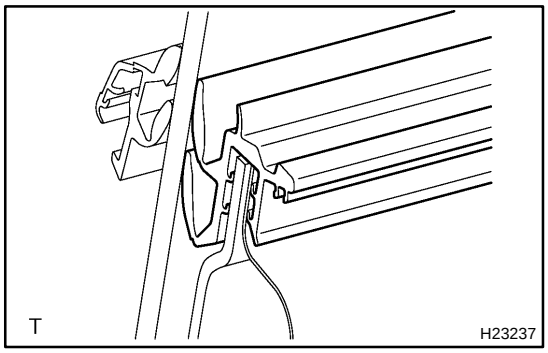

13. Power vertical type:
INSTALL WEATHERSTRIP INNER

Install the back window glass to the window regulator assembly.

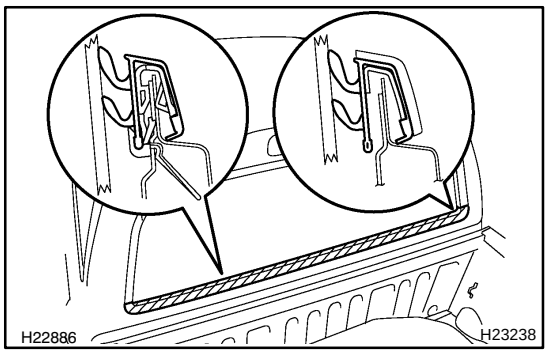

14. Power vertical type:
INSTALL WEATHERSTRIP OUTER

Install the weatherstrip as shown in the illustration.

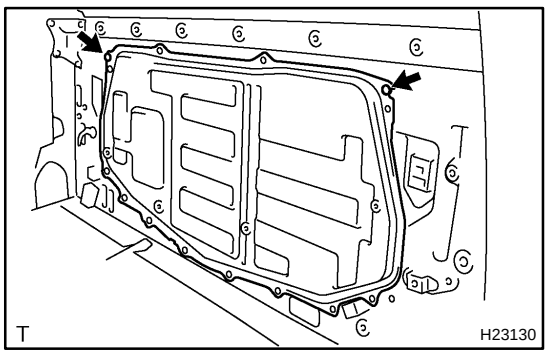

15. Power vertical type:
INSTALL SERVICE HOLE COVER

(a) Install the cover with the 2 clips.

NOTICE:

Be careful not to drop and deform the cover as this may cause deformation.

(b) Install the cover to the body.

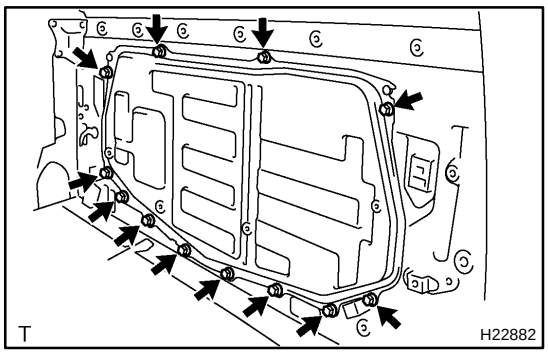

(c) Install the 12 bolts.
Torque: 8.0 N·m (82 kgf·cm, 71 in.·lbf)

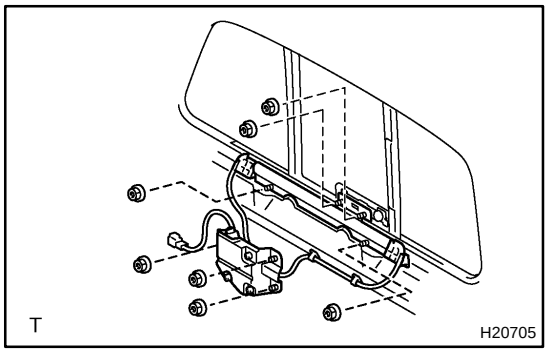

16. Power slide type:
INSTALL BACK WINDOW REGULATOR ASSEMBLY
(a) Install the back window regulator assembly with the 7 nuts.
Torque: 5.5 N·m (54 kgf·cm, 49 in.·lbf)
(b) Install the back door glass channel cover.

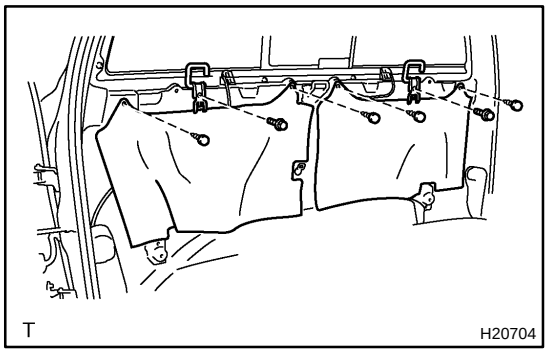

(c) Install the 4 clips and 2 back panel silencer pads.
(d) Install the tether anchor brackets with the 2 bolts.
Torque: 20 N·m (200 kgf·cm, 15 ft·lbf)
17. Standard cab:
Access cab (Standard body type):
Access cab (Wide body type):
INSTALL REAR PART OF ROOF HEADLINING
(a) Standard cab:
Install the rear part of the roof headlining with the 2 clips.
(b) Access cab:
Install the rear part of the roof headlining with the 3 clips.
18. Double cab:
INSTALL QUARTER TRIMS UPPER
(See page BO−138)
19. Double cab:
INSTALL QUARTER TRIMS LOWER
(See page BO−138)
20. INSTALL QUARTER TRIMS (See page BO−130, BO−138)
21. Standard cab:
INSTALL BACK PANEL UPPER GARNISH
(See page BO−130)
22. Standard cab:
INSTALL COAT HOOK (See page BO−130)
23. INSTALL ROOM LIGHT (See page BO−130, BO−138)
24. Access cab (Standard body type):
Access cab (Wide body type):
INSTALL ROOF SIDE RAIL GARNISHES
(See page BO−130, BO−138)

25. Standard cab:
INSTALL FRONT PILLAR GARNISHES
(See page BO−130)
26. INSTALL ASSIST GRIPS (See page BO−130, BO−138)
27. Double cab:
INSTALL BACK PANEL TRIM (See page BO−138)
28. Access cab (Standard body type),
Access cab (Wide body type):
INSTALL ACCESS DOOR SCUFF PLATES
(See page BO−130)
29. Standard cab:
INSTALL FRONT DOOR SCUFF PLATES
(See page BO−130)
30. Access cab (Standard body type),
Access cab (Wide body type):
INSTALL REAR SEAT (See page BO−211)
31. Double cab:
UNFOLD REAR SEAT

CAUTION:
When returning the seat, make sure the seat is securely locked by pushing forward and rearward on the top of the seatback or by trying to pull up the edge of the bottom cushion. Failure to do so will cause the seat belt from operating improperly.

BO4Q5−01

REMOVAL

HINT:

A bolt without a torque specification is shown in the standard bolt chart (see page SS−2).

1. **Access cab (Standard body type):**
   Access cab (Wide body type):
   REMOVE REAR SEAT (See page BO−203)

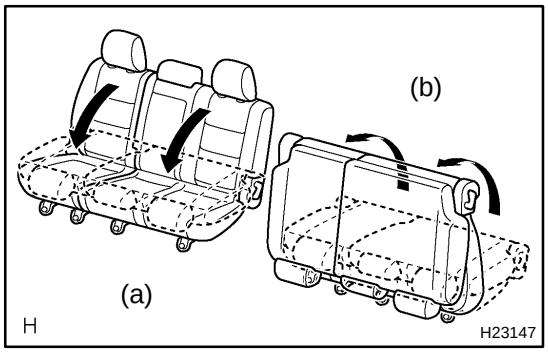

2. **Double cab:**
   FOLD REAR SEAT

(a) Lower the headrest to the lowest position. Pull the seatback angle adjusting lever and fold the seatback down.

(b) Unlock the seat legs by pulling up one of the lever on the seat legs and turn up the whole seat forward.

3. **Standard cab:**
   REMOVE FRONT DOOR SCUFF PLATES
   (see page BO−126)
4. **Access cab (Standard body type):**
   Access cab (Wide body type):
   REMOVE ACCESS DOOR SCUFF PLATES
   (See page BO−126)
5. **Double cab:**
   REMOVE BACK PANEL TRIM (See page BO−133)
6. **REMOVE ASSIST GRIPS**
   (See page BO−126, BO−133)
7. **Standard cab:**
   REMOVE FRONT PILLAR GARNISHES
   (See page BO−126)
8. **Access cab (Standard body type):**
   Access cab (Wide body type):
   REMOVE ROOF SIDE RAIL GARNISHES
   (See page BO−126)
9. **REMOVE ROOM LIGHT (See page BO−126, BO−133)**
10. **Standard cab:**
    REMOVE COAT HOOK (See page BO−126)
11. **Standard cab:**
    REMOVE BACK PANEL UPPER GARNISH
    (See page BO−126)
12. **Access cab (Standard body type):**
    Access cab (Wide body type):
    REMOVE QUARTER TRIMS (See page BO−126)
13. **Double cab:**
    REMOVE QUARTER TRIMS LOWER
    (See page BO−133)
14. **Double cab:**
    REMOVE QUARTER TRIMS UPPER
    (See page BO−133)

15. Standard cab:
Access cab (Standard body type):
Access cab (Wide body type):
REMOVE REAR PART OF ROOF HEADLINING

(a) Standard cab:
Remove the 2 clips and the rear part of the roof headlining.

(b) Access cab (Standard body type):
Access cab (Wide body type):
Remove the 3 clips and the rear part of the roof headlining.

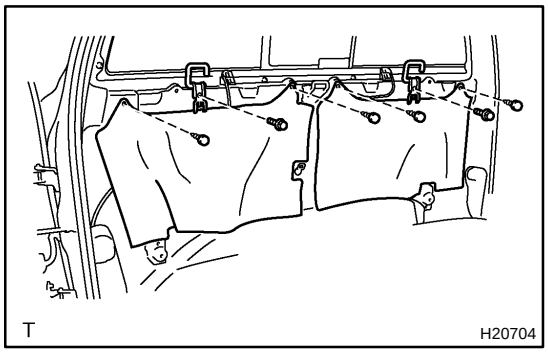

16. Power slide type:
REMOVE BACK WINDOW REGULATOR ASSEMBLY

(a) Remove the 2 bolts and tether anchor brackets.

(b) Remove the 4 clips and 2 back panel silencer pads.

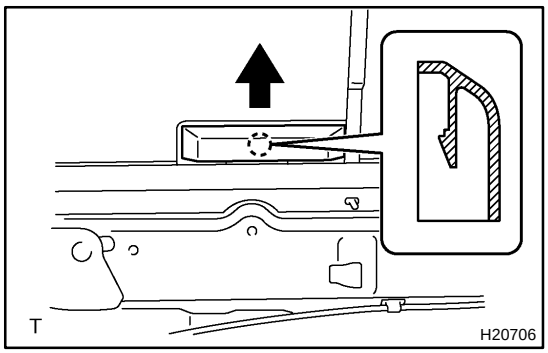

(c) Using a screwdriver, remove the back door glass channel cover.

HINT:
Tape the screwdriver tip before use.

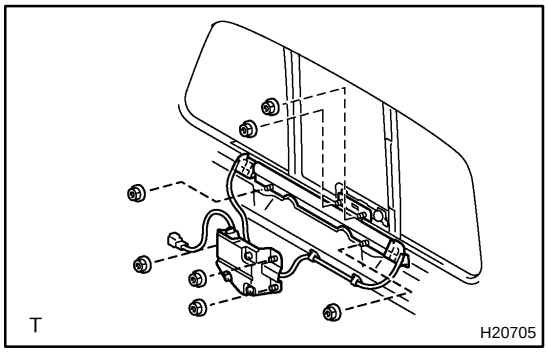

(d) Remove the 7 nuts and the back window regulator assembly.

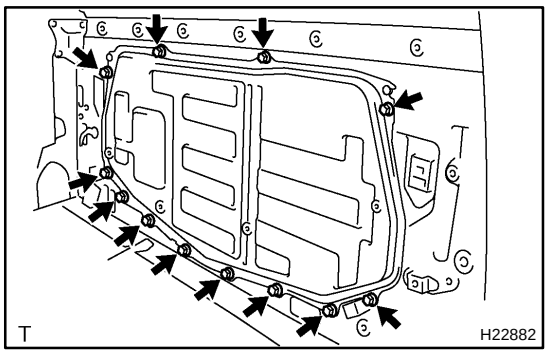

17. Power vertical type:
REMOVE SERVICE HOLE COVER

(a) Remove the 12 bolts.

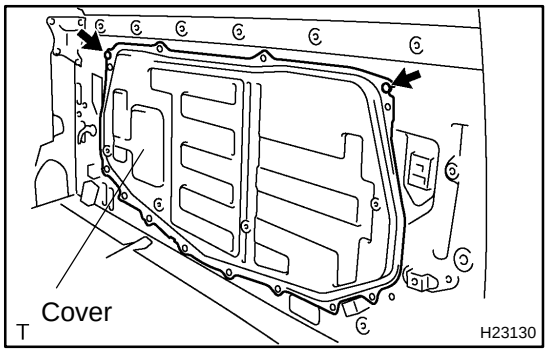

(b) Using a clip remover, remove the 2 clips and cover.

NOTICE:

When the clips are removed, the cover may fall and become deformed.

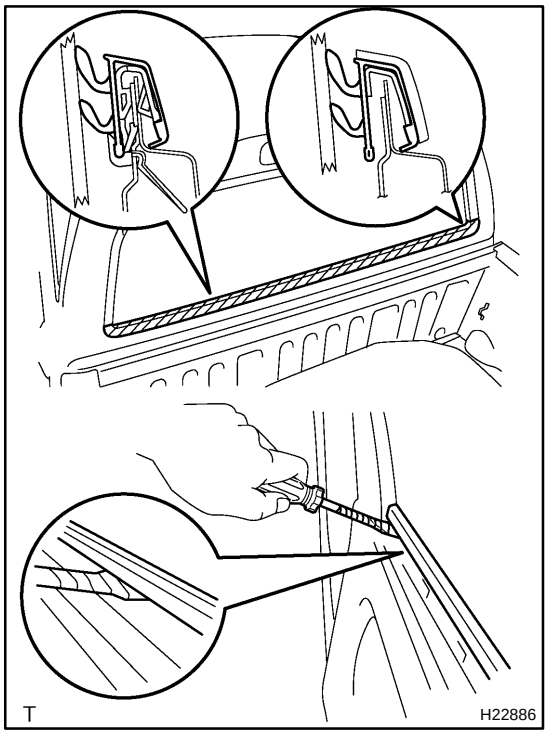

18. Power vertical type:
REMOVE WEATHERSTRIP OUTER

(a) Put protective tape under the weatherstrip.

(b) Using a screwdriver, disengage the claws and remove the weatherstrip.

HINT:

Tape the screwdriver tip before use.

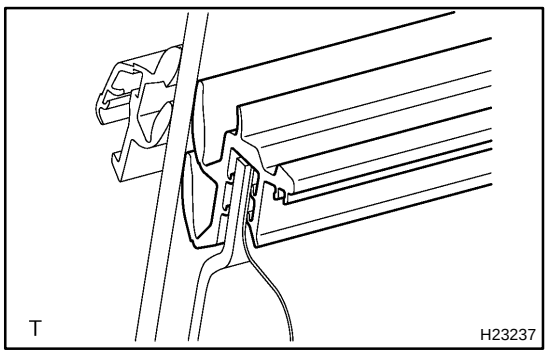

19. Power vertical type:
REMOVE WEATHERSTRIP INNER

Using a screwdriver, remove the weatherstrip.

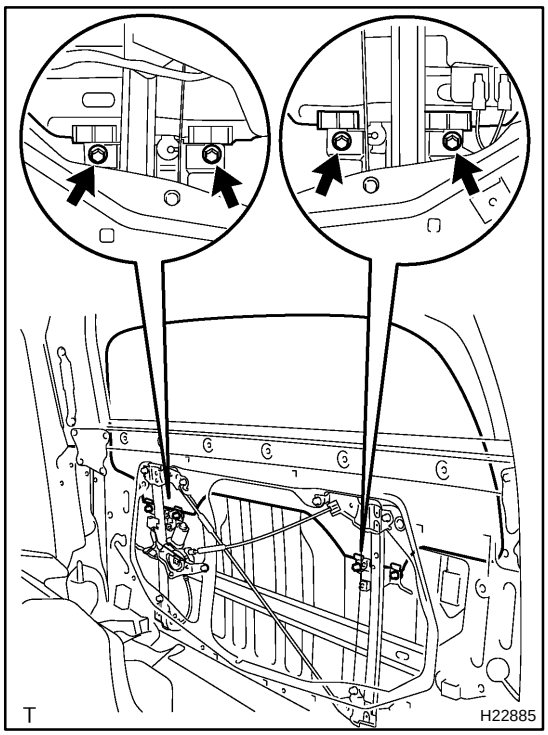

20. Power vertical type:
REMOVE BACK WINDOW GLASS

(a) Disconnect the defogger connector.
(b) Remove the 4 bolts and glass.

HINT:
Insert a shop rag inside the panel to prevent the back window glass from being scratched.

NOTICE:

- **Do not damage the back window glass assembly.**
- **When the bolts are removed, the back window glass assembly might fall and become deformed.**

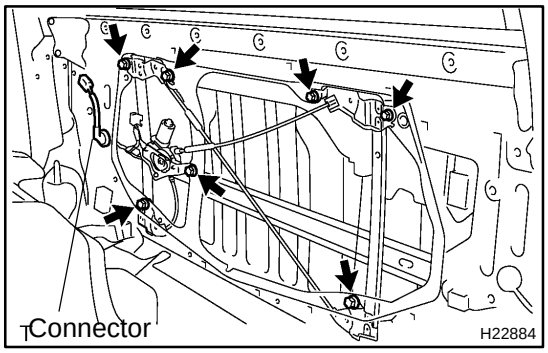

21. Power vertical type:
REMOVE BACK WINDOW REGULATOR ASSEMBLY

(a) Disconnect the connector.
(b) Remove the 7 bolts and regulator.

HINT:
Remove the back window regulator assembly through the service hole.

NOTICE:
When the bolts are removed, the back window regulator assembly may fall and become deformed.

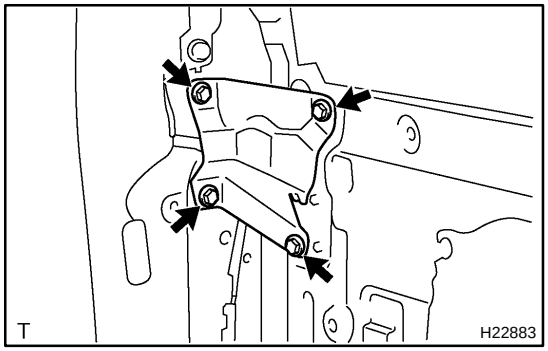

22. Power vertical type:
REMOVE BACK WINDOW MOULDING

(a) Remove the 8 bolts and the bracket LH and RH.

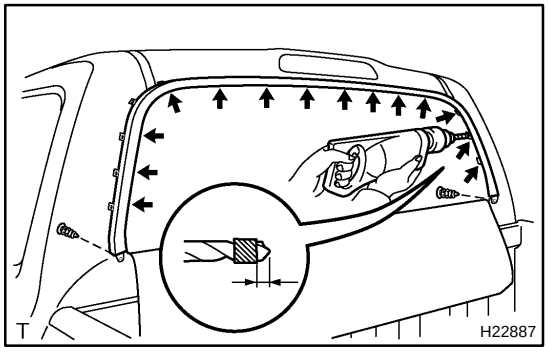

(b) Remove the 2 clips.
(c) Using a drill of less than ø 4 mm (0.16 in.), drill out the 14 rivet heads and remove the moulding.

NOTICE:

- **Be sure to gently place the drill perpendicular to the rivet, otherwise the rivet hole and the drill itself will be damaged.**
- **Be careful as the cut rivet will be very hot**
- **Cover the panel with a shop rag to prevent metal debris form entering inside the panel.**

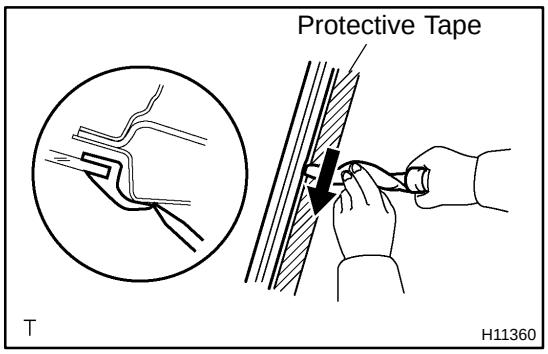

23. Fix type, Slide type, Power slide type: REMOVE BACK WINDOW GLASS

(a) Remove the 4 nuts.

(b) Using a screwdriver, remove the weatherstrip from the body.

HINT:

Tape the screwdriver tip before use.

NOTICE:

Be careful not to damage the body paint.

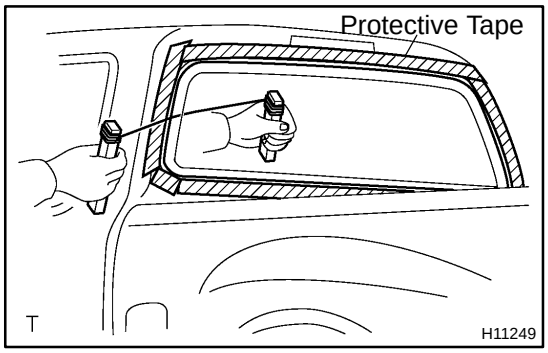

(c) From the interior, insert piano wore between the vehicle body and glass.

(d) Tie objects tat can serve as handle (for example, wooden blocks) to all wire ends.

HINT:

Apply protective tape to the outer surface to prevent the surface from being scratched.

NOTICE:

When separating the glass, take care not to damage the body paint and exterior.

(e) Cut off the adhesive by pulling the piano wire around it.

HINT:

Cut off the adhesive on the areas as shown in the illustration but leave the adhesive where the stud bolts exist.

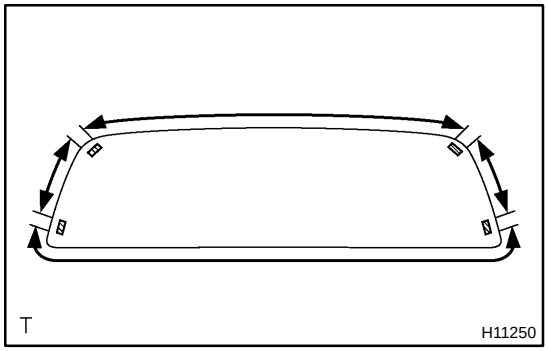

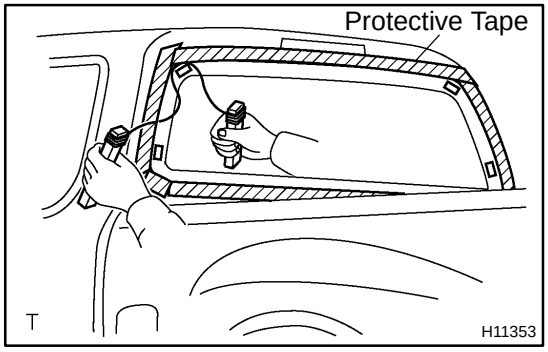

(f) Pass piano wire through as shown in the illustration, and cut off the adhesive on the part adhered to the stud bolts.

(g) Remove the glass.

NOTICE:

Leave as much of the adhesive on the body as possible when removing the glass.

CLIP

BO0HX−04

REPLACEMENT

The removal and installation methods of typical clips used in body parts are shown in the table below.
HINT:
If the clip is damaged during the operation, always replace it with a new clip.

Shape (Example)	Removal / Installation
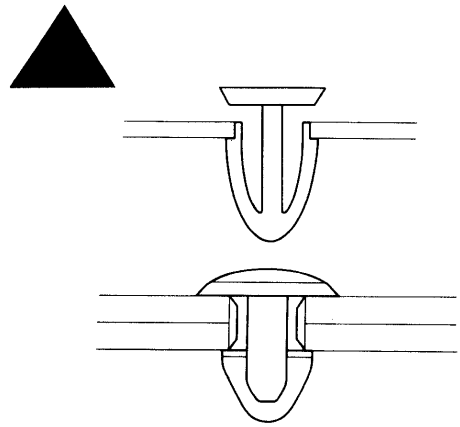	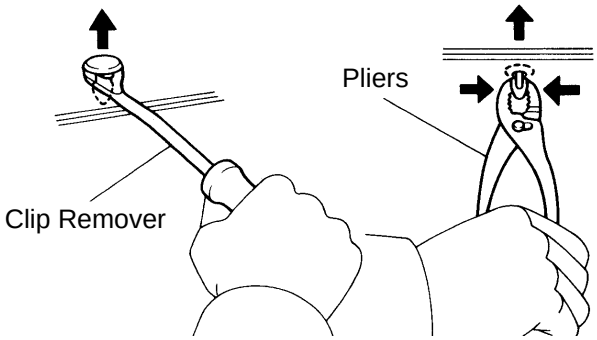 Remove clips from front or rear using clip remover or pliers.
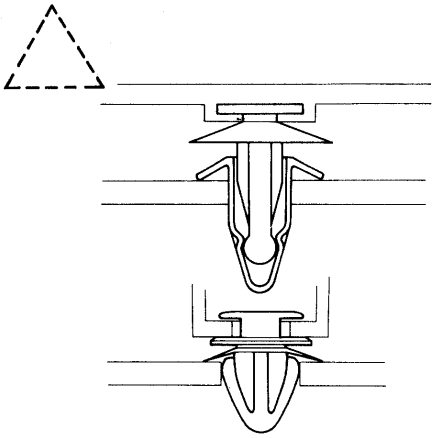	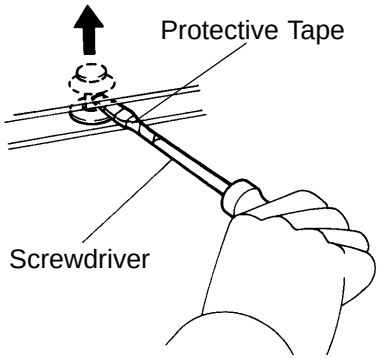 Remove clips from front or rear using clip remover or pliers.
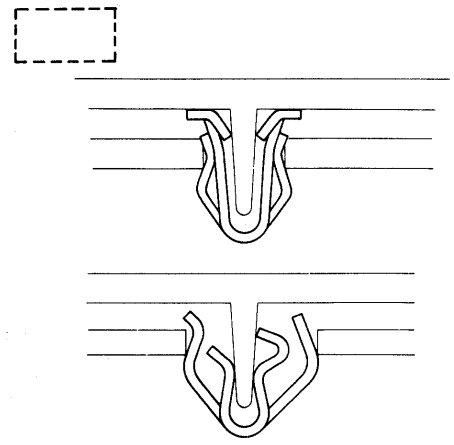	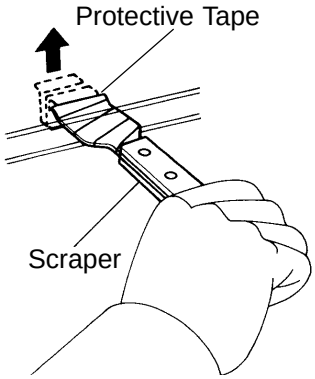 Remove clips from front or rear using clip remover or pliers.

V00005

Shape (Example)	Removal/Installation
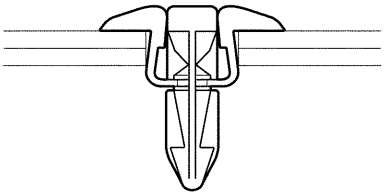	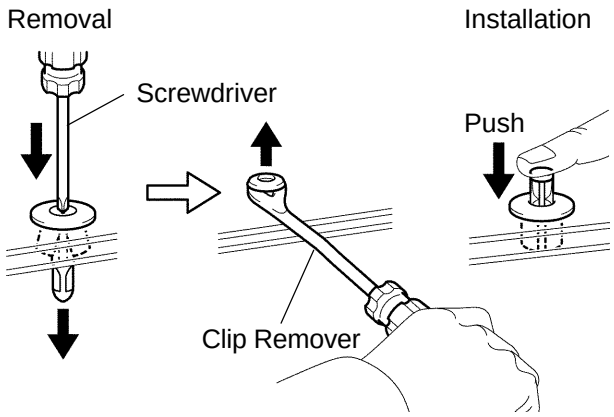 Remove rivet by pushing the center pin through and prying out the rivet shell.
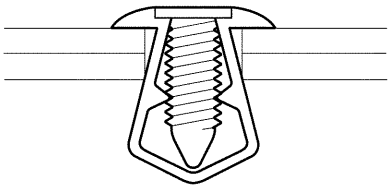	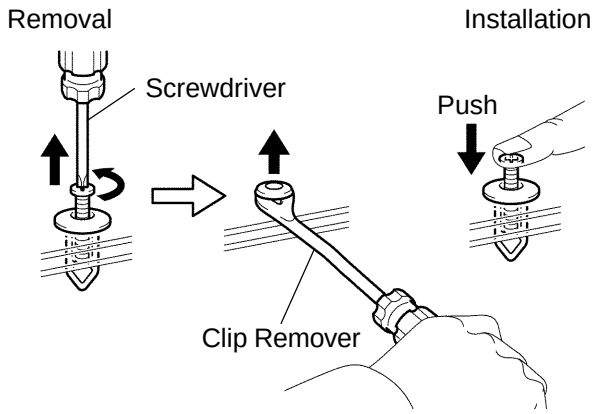 Remove rivet by unscrewing the center pin and prying out the rivet shell.
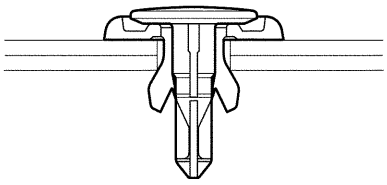	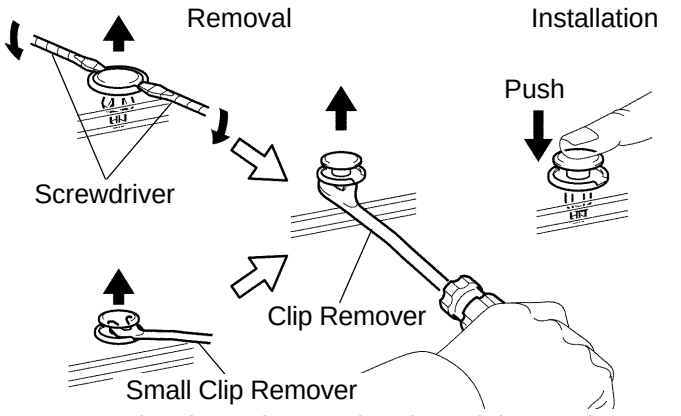 Remove rivet by prying out the pin and then prying out the rivet shell.

DECK TOP PROTECTOR

BO4Q0−01

COMPONENTS

Access Cab (Standard Body Type), Standard Cab

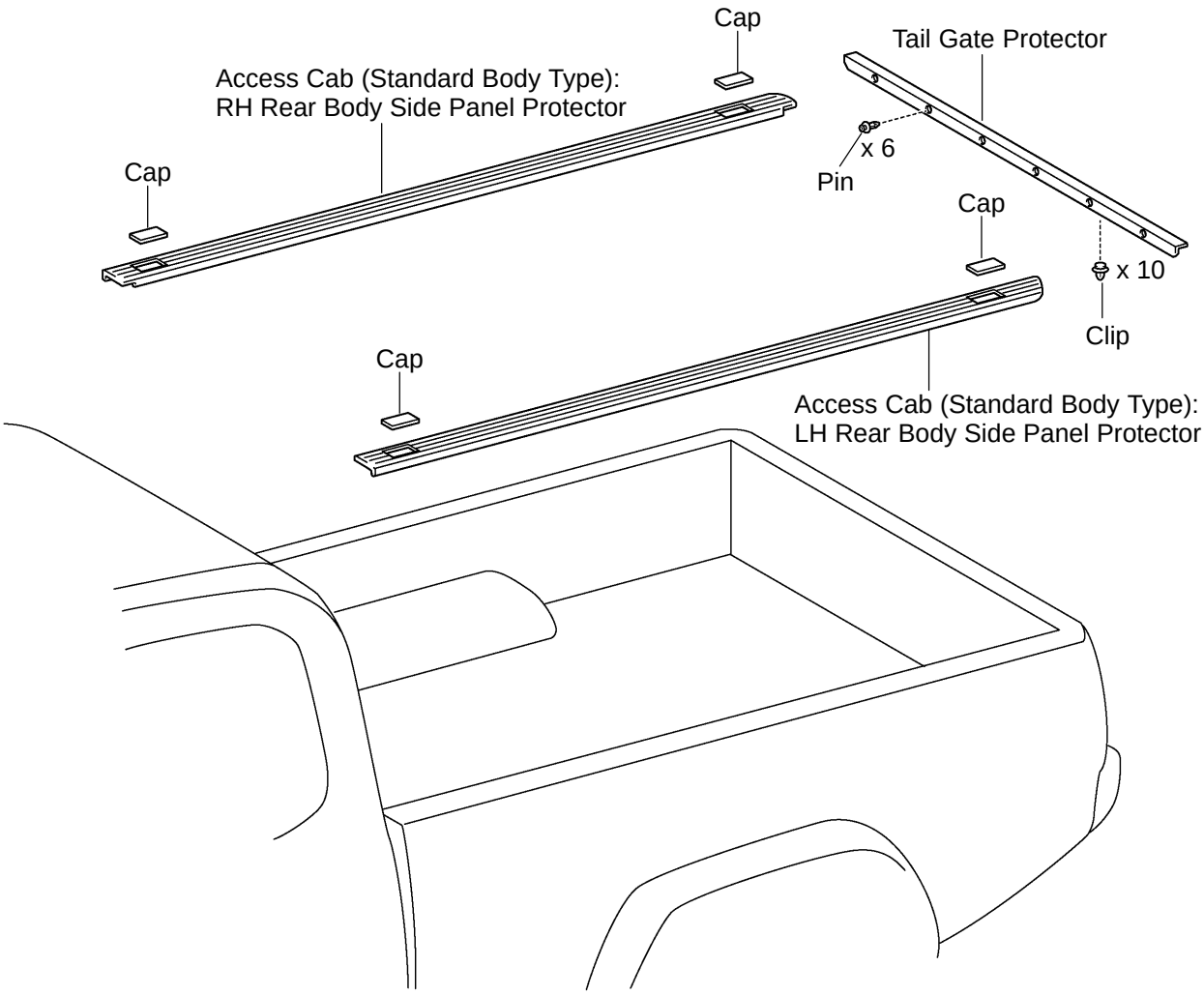

T

H15019

Access Cab (Wide Body Type)

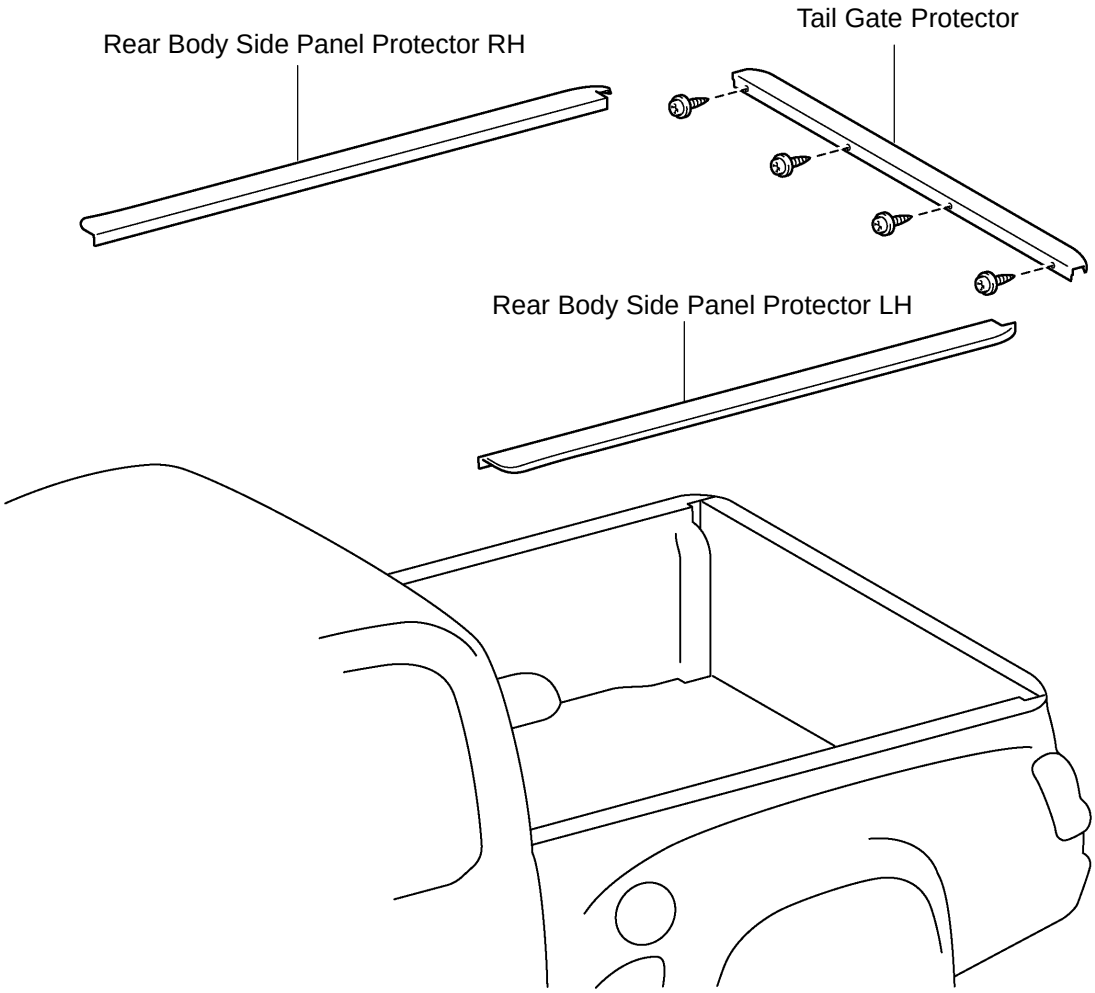

T

H20693

Double Cab

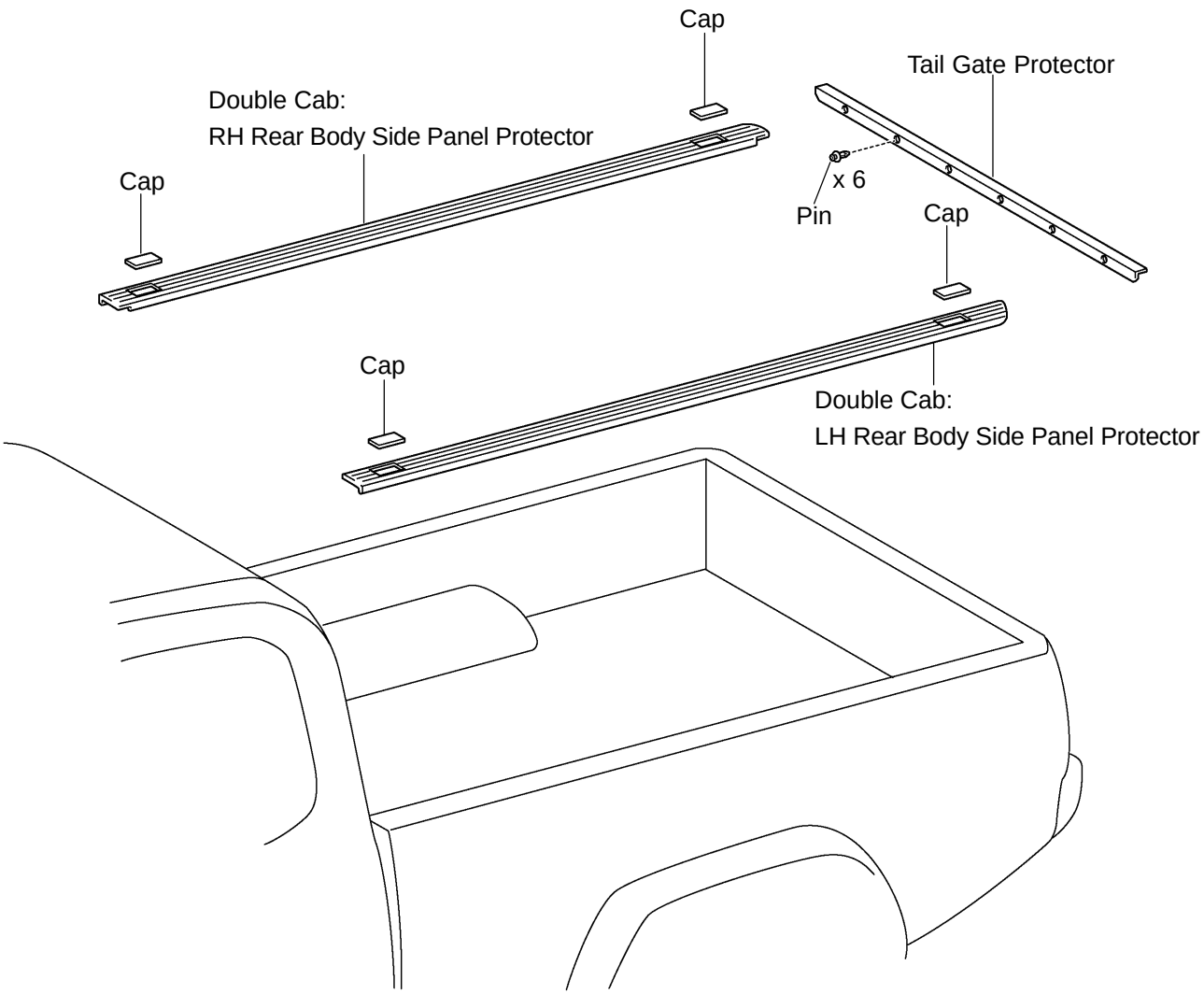

T

H23622

BO40O−04

INSTALLATION

Installation is in the reverse order of removal (see page BO−66).

BO4Q1−02

REMOVAL

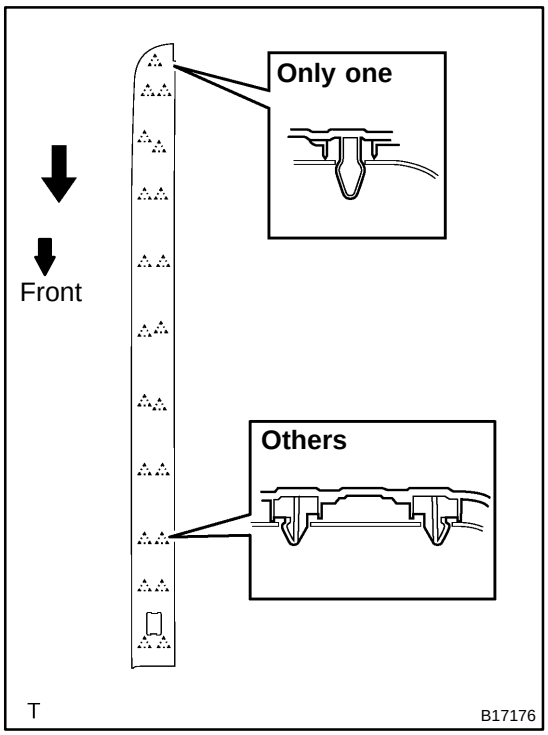

1. Access cab (Standard body type): REMOVE REAR BODY SIDE PANEL PROTECTOR

Using a moulding remover, remove the 2 protectors.

NOTICE:

- **Each protector has 21 clips as shown in the illustration.**
- **Be careful not to damage the clips.**

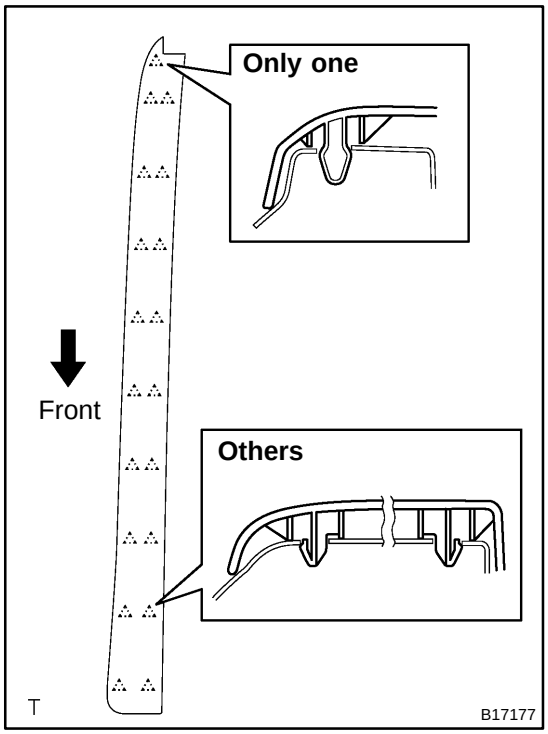

2. Access cab (Wide body type): REMOVE REAR BODY SIDE PANEL PROTECTOR

Using a moulding remover, remove the 2 protectors.

NOTICE:

- **Each protector has 19 clips as shown in the illustration.**
- **Be careful not to damage the clips.**

3. Access cab (Standard body type), Standard cab: REMOVE TAIL GATE PROTECTOR

(a) Remove the 6 pins.

(b) Using a clip remover, remove the protector and 10 clips.

4. Access cab (Wide body type) only: REMOVE TAIL GATE PROTECTOR

(a) Using a torx® socket wrench (T30), remove the 4 screws.

(b) Using a moulding remover, remove the protector and 8 clips.

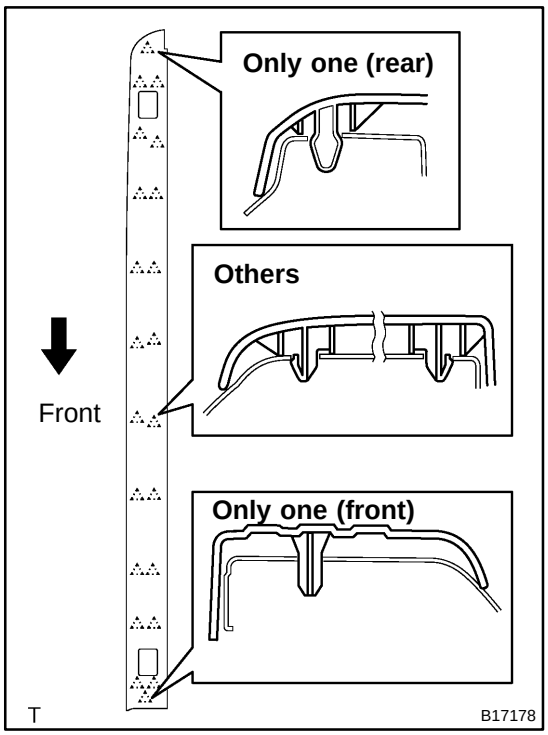

5. Double cab:
REMOVE REAR BODY SIDE PANEL PROTECTOR

Using a moulding remover, remove the 2 protectors.

(a) Using a torx® socket wrench (T30), remove the 4 screws.

(b) Using a moulding remover, remove the protector and 8 clips.

NOTICE:

- **Each protector has 22 clips (3 types) as shown in the illustration.**
- **Be careful not to damage the clips.**

6. Double cab:
REMOVE TAIL GATE PROTECTOR

(a) Remove the 6 pins.

FRONT BUMPER

BO4H1−02

COMPONENTS

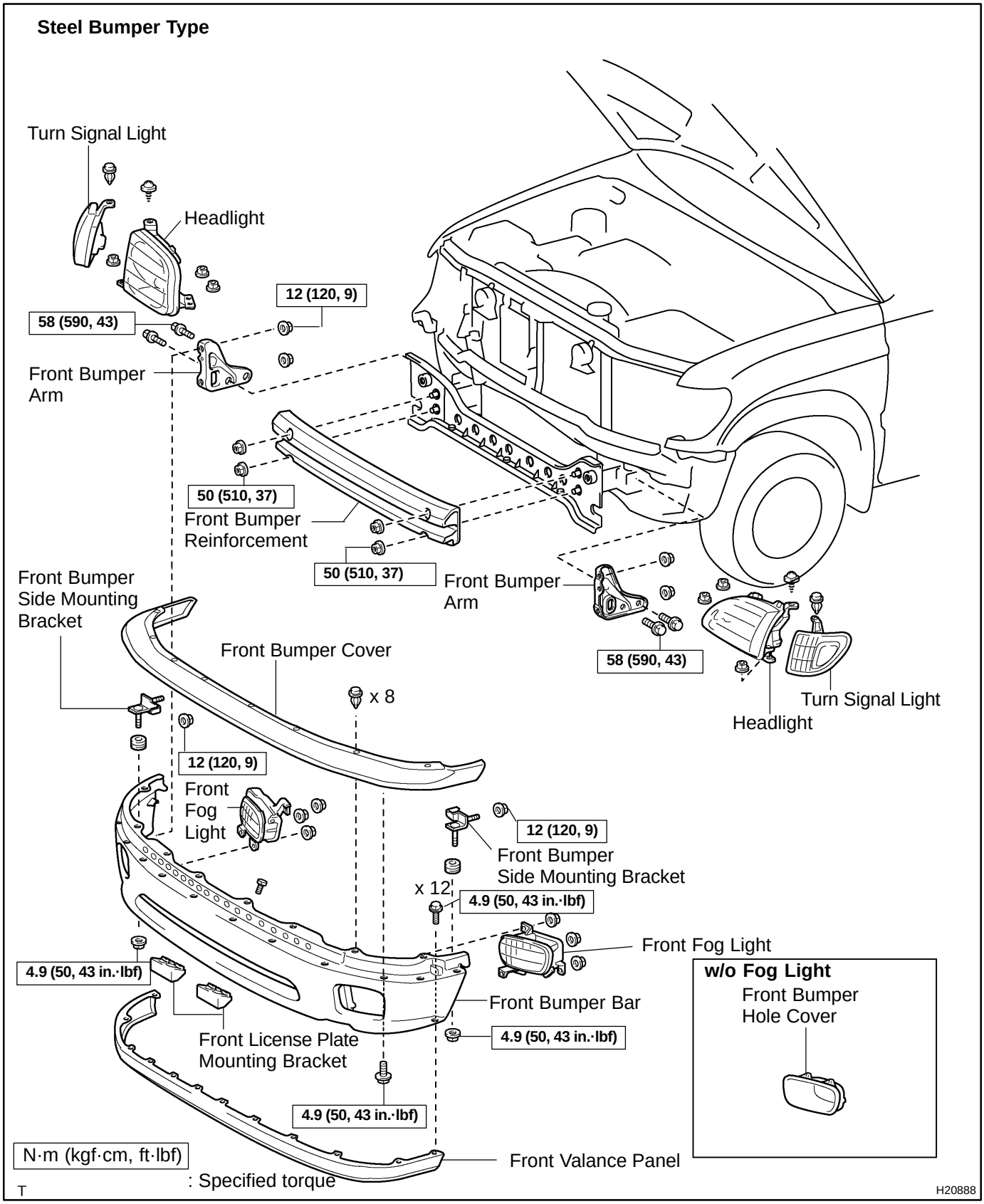

Resin Bumper Type

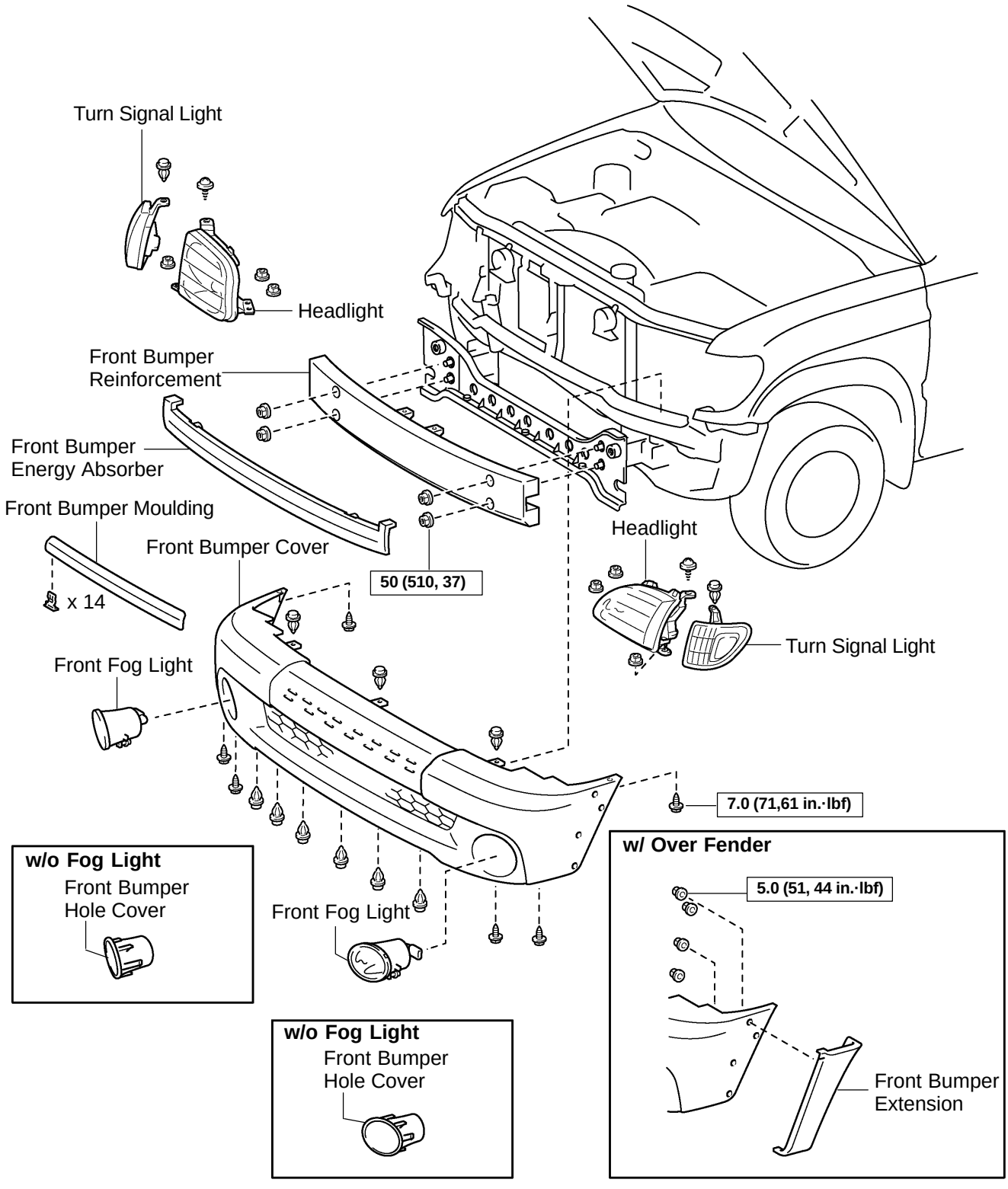

T N·m (kgf·cm, ft·lbf) : Specified torque

H20689

BO0I4−04

ADJUSTMENT

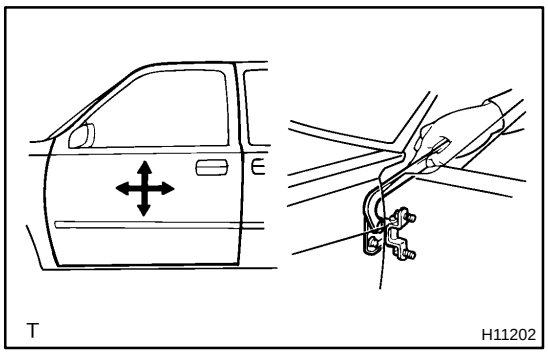

1. ADJUST DOOR IN FORWARD/REARWARD AND VERTICAL DIRECTIONS

Using SST, adjust the door by loosening the body side hinge bolts.

SST 09812−00010

Torque: 23 N·m (235 kgf·cm, 17 ft·lbf)

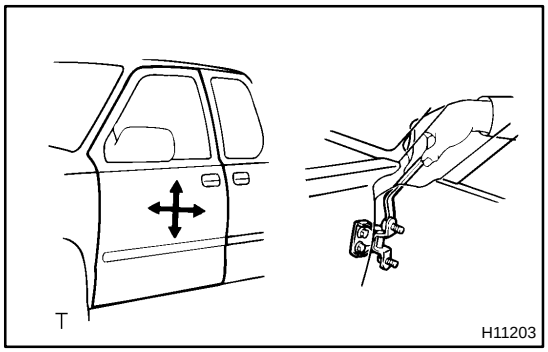

2. ADJUST DOOR IN LEFT/RIGHT AND VERTICAL DIRECTIONS

Adjust the door by loosening the door side hinge bolts.

HINT:

Substitute the standard bolt for the centering bolt (see page BO−7).

Torque: 23 N·m (235 kgf·cm, 17 ft·lbf)

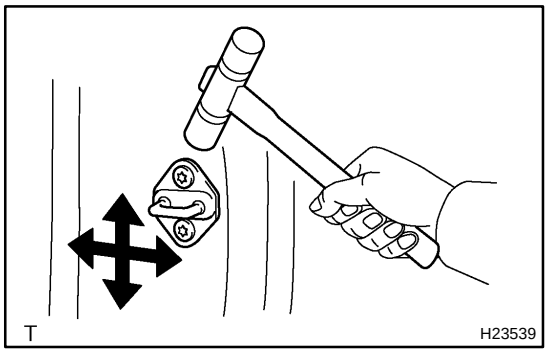

3. ADJUST DOOR LOCK STRIKER

(a) Check that the door fit and door lock linkages are adjusted correctly.

(b) Adjust the striker position by slightly loosening the striker mounting screws and hitting the striker with a hammer.

(c) Tighten the striker mounting screws again.

Torque: 23 N·m (235 kgf·cm, 17 ft·lbf)

FRONT DOOR

COMPONENTS

BO2EL−03

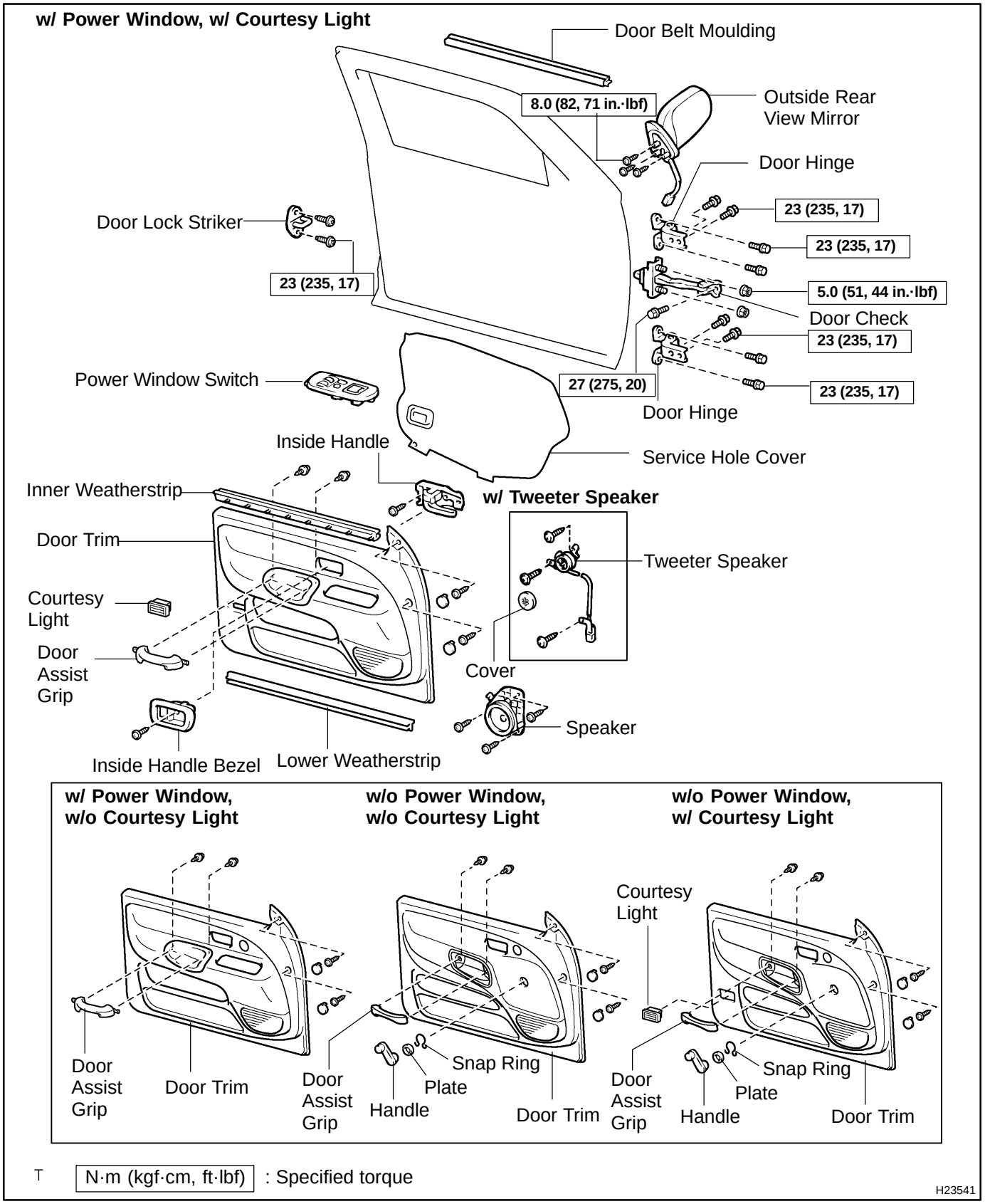

T N·m (kgf·cm, ft·lbf) : Specified torque

H23541

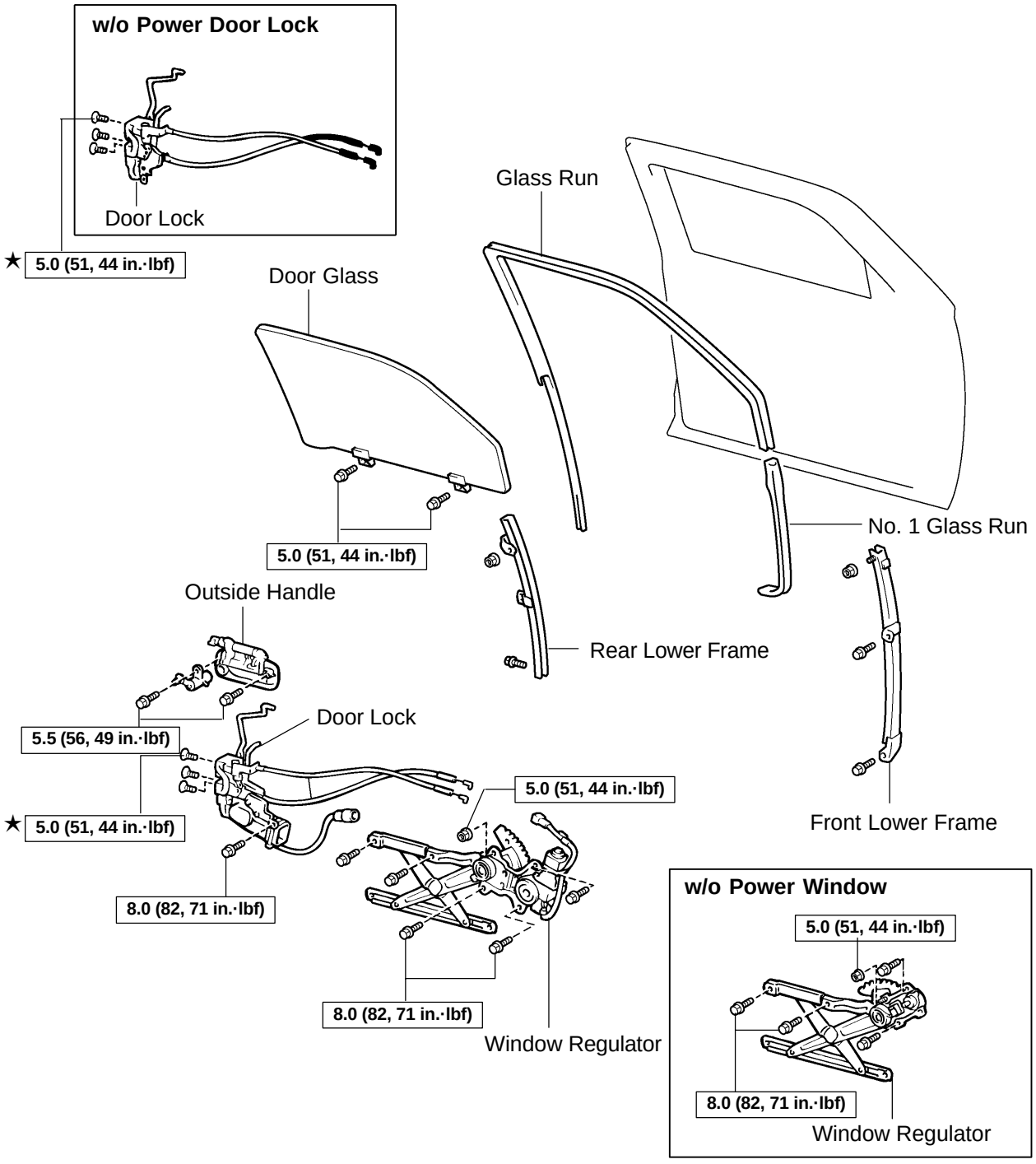

T

N·m (kgf·cm, ft·lbf) : Specified torque

★ Precoated part

H11407

BO0I3−05

DISASSEMBLY

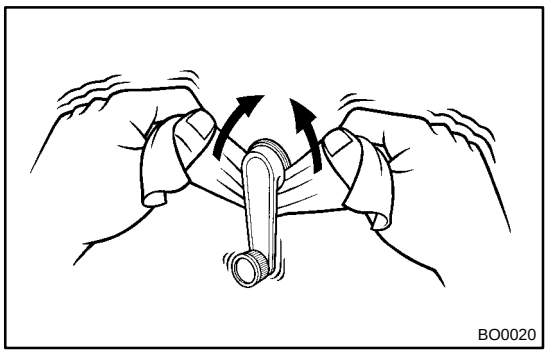

HINT:

A bolt without a torque specification is shown in the standard bolt chart (see page SS−2).

1. w/o Power window:
REMOVE REGULATOR HANDLE

Pull off the snap ring with a cloth and remove the regulator handle and plate.

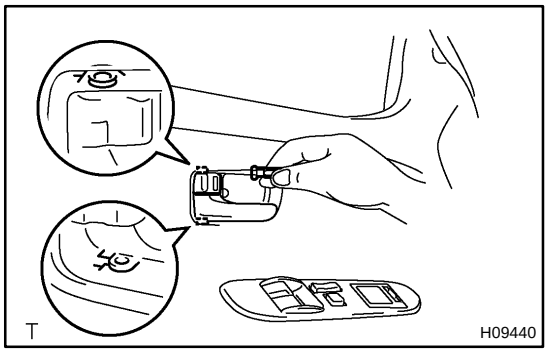

2. REMOVE INSIDE HANDLE BEZEL

(a) Remove the screw.

(b) Using a screwdriver, remove the inside handle bezel as shown in the illustration.

HINT:

Tape the screwdriver tip before use.

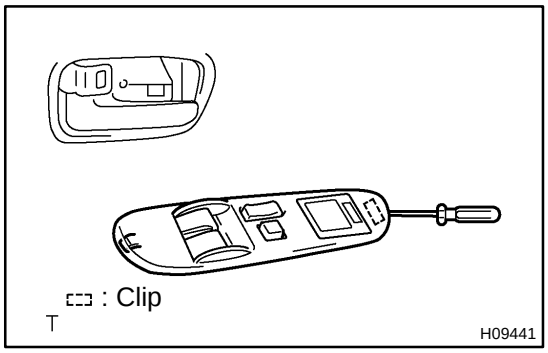

3. w/ Power window:
REMOVE POWER WINDOW SWITCH

(a) Using a screwdriver, remove the power window switch.

HINT:

Tape the screwdriver tip before use.

(b) Disconnect the connectors.

4. w/ Courtesy light:
REMOVE COURTESY LIGHT

(a) Using a screwdriver, remove the courtesy light.

HINT:

Tape the screwdriver tip before use.

(b) Disconnect the connector.

5. w/o Courtesy light:
REMOVE COURTESY LIGHT COVER

Using a screwdriver, remove the courtesy light cover.

HINT:

Tape the screwdriver tip before use.

6. w/ Tweeter speaker:
REMOVE TWEETER SPEAKER

(a) Using a screwdriver, remove the tweeter speaker cover.

HINT:

Tape the screwdriver tip before use.

(b) Disconnect the connector.

(c) Remove the 3 screws and tweeter speaker.

7. REMOVE DOOR TRIM

(a) Remove the 2 caps and 2 screws.

(b) Insert a screwdriver between the door trim and door panel to remove the door trim.

HINT:

Tape the screwdriver tip before use.

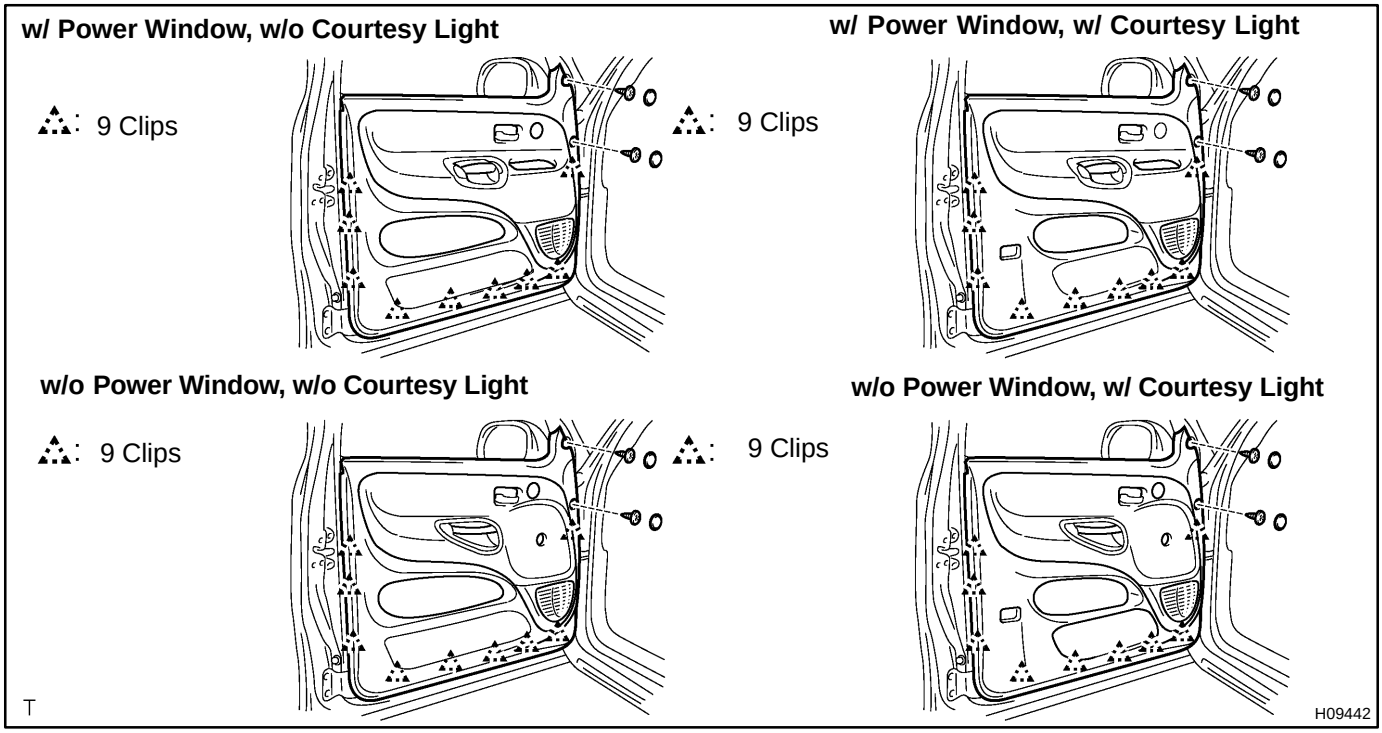

(c) Pull the door trim upward to remove it.

8. REMOVE DOOR ASSIST GRIP

Remove the 2 screws and door assist grip from the door trim.

9. REMOVE INNER WEATHERSTRIP

10. REMOVE LOWER WEATHERSTRIP

11. REMOVE INSIDE HANDLE

(a) Remove the screw.

(b) Slide the inside handle backward to remove it.

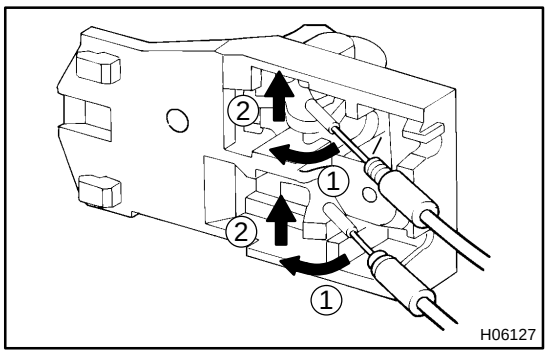

(c) Disconnect the 2 cables from the inside handle as shown in the illustration.

12. REMOVE SERVICE HOLE COVER

(a) Disconnect the clamps and connector.

(b) Remove the service hole cover.

13. REMOVE SPEAKER

(a) Disconnect the connector.

(b) Remove the 3 screws and speaker.

14. REMOVE OUTSIDE REAR VIEW MIRROR

(a) w/ Remote control:
Disconnect the connector.

(b) Remove the 3 screws and outside rear view mirror.

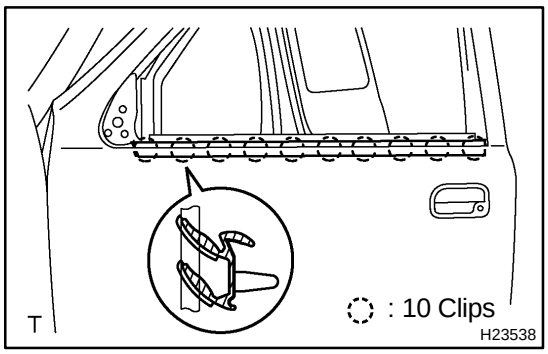

15. REMOVE DOOR BELT MOULDING

Using a moulding remover, remove the door belt moulding.

16. REMOVE DOOR GLASS RUN

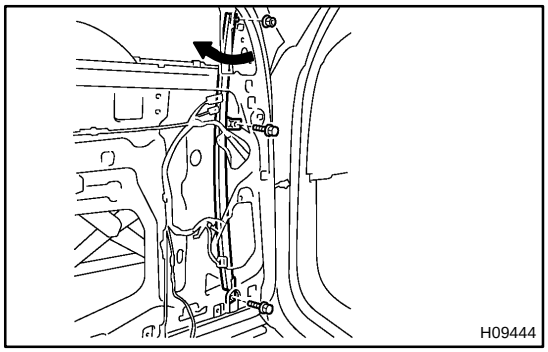

17. REMOVE FRONT LOWER FRAME

Remove the 2 bolts, nut and front lower frame as shown in the illustration.

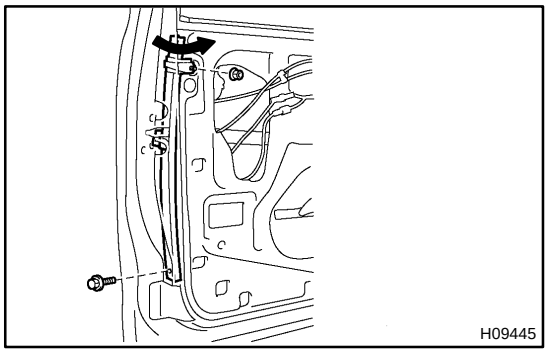

18. REMOVE REAR LOWER FRAME

Remove the bolt, nut and rear lower frame as shown in the illustration.

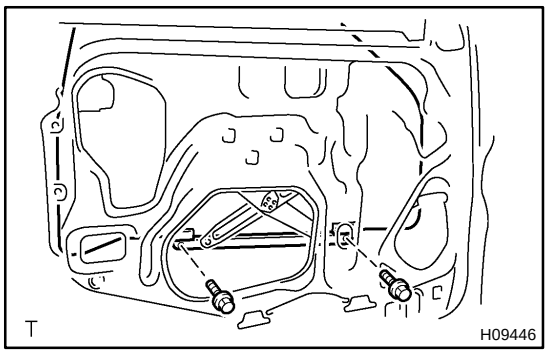

19. REMOVE DOOR GLASS

(a) Open the door glass until the bolts appear in the service hole.

(b) Remove the 2 bolts and door glass.

NOTICE:

Do not damage the door glass.

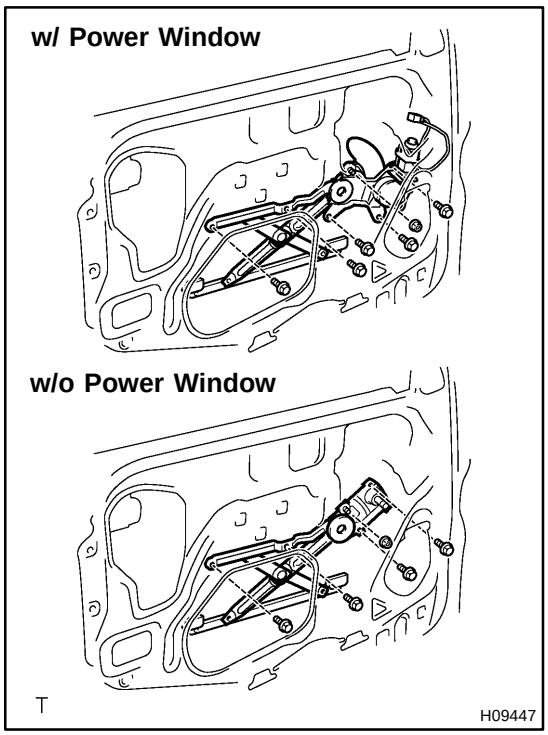

20. REMOVE WINDOW REGULATOR

(a) w/ Power window:
Disconnect the connector.

(b) w/ Power window:
Remove the 5 bolts, nut and window regulator.

(c) w/o Power window:
Remove the 4 bolts, nut and window regulator.

(d) Remove the window regulator through the service hole.

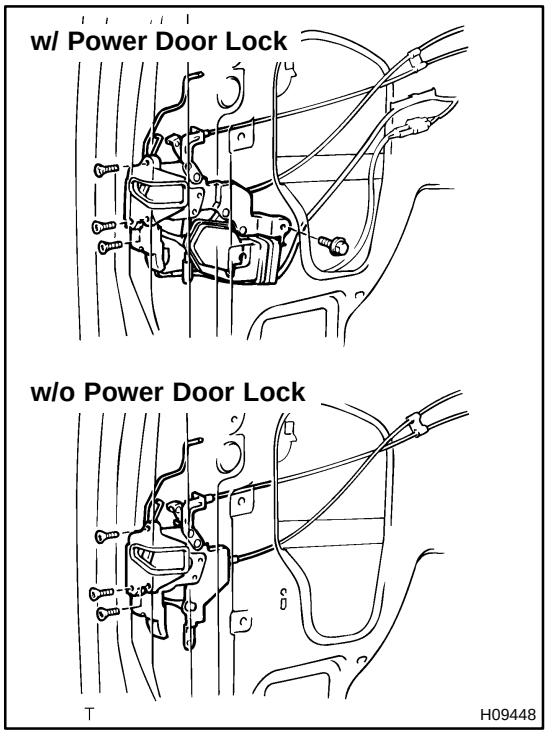

21. REMOVE DOOR LOCK

(a) Disconnect the 2 links from the outside handle and door lock cylinder.

(b) w/ Power door lock:
Disconnect the connector and remove the bolt.

(c) Using a torx® socket wrench, remove the 3 torx® screws.
Torx® socket wrench:
T30 (Part No. 09042−00010 or locally manufactured tool)

22. REMOVE OUTSIDE HANDLE WITH DOOR LOCK CYLINDER

(a) Remove the 2 bolts and outside handle together with the door lock cylinder.

(b) Remove the door lock cylinder from the outside handle.

BO2EM−03

REASSEMBLY

1. INSTALL OUTSIDE HANDLE WITH DOOR LOCK CYLINDER

(a) Install the door lock cylinder to the outside handle.

(b) Install the outside handle with door lock cylinder with the 2 bolts.

Torque: 5.5 N·m (56 kgf·cm, 49 in.·lbf)

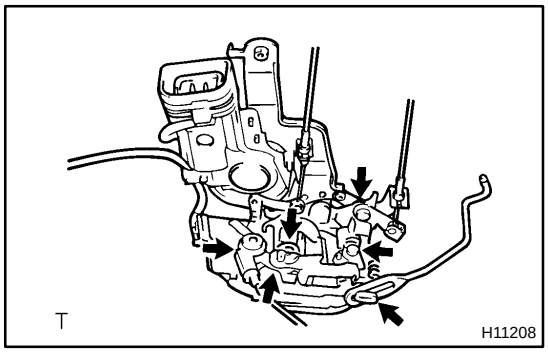

2. INSTALL DOOR LOCK

HINT:

Apply MP grease to the sliding and rotating parts of the door lock.

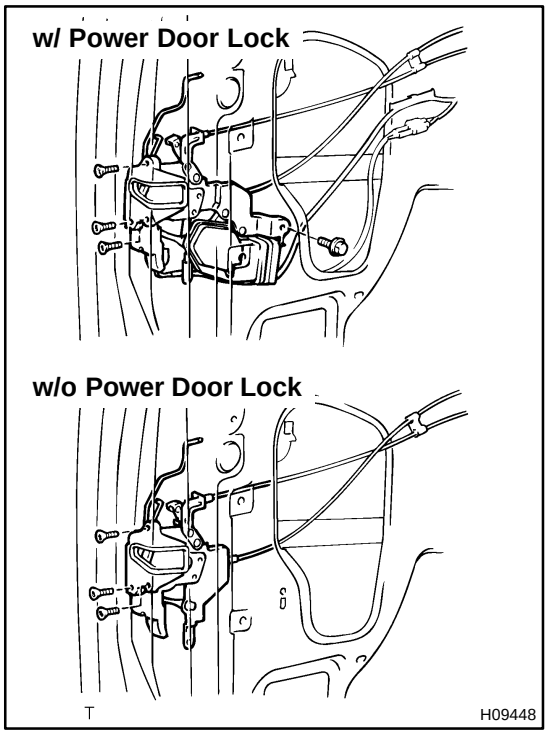

(a) Using a torx® socket wrench, install the door lock with the 3 torx® screws.

Torx® socket wrench:

T30 (Part No. 09042−00010 or locally manufactured tool)

Torque: 5.0 N·m (51 kgf·cm, 44 in.·lbf)

HINT:

Apply adhesive to the 3 screws.

Adhesive: Part No. 08833−00070, THREE BOND 1324 or equivalent

(b) w/ Power door lock:

Connect the connector and install the bolt.

Torque: 5.5 N·m (56 kgf·cm, 49 in.·lbf)

(c) Connect the 2 links to the outside handle and door lock cylinder.

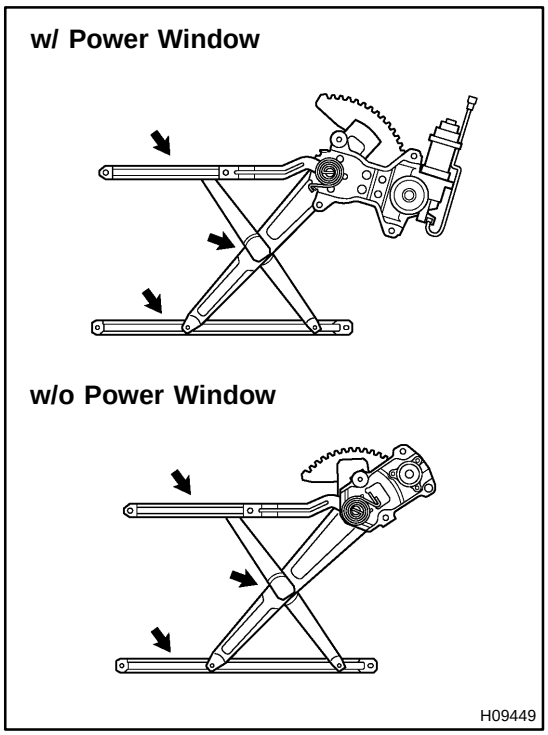

3. INSTALL WINDOW REGULATOR

HINT:

Apply MP grease to the sliding and rotating parts of the window regulator.

(a) Install the window regulator through the service hole.

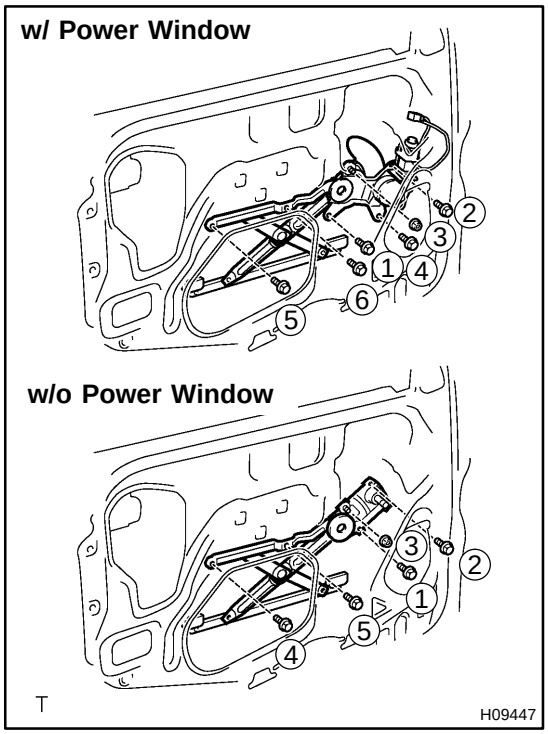

(b) w/ Power window:

Install the window regulator with the 5 bolts and nut.

Torque:

8.0 N·m (82 kgf·cm, 71 in.·lbf) for bolt

5.0 N·m (51 kgf·cm, 44 in.·lbf) for nut

HINT:

When installing the window regulator, tighten the bolts and nut in the order shown in the illustration.

(c) w/o Power window:

Install the window regulator with the 4 bolts and nut.

Torque:

5.0 N·m (82 kgf·cm, 71 in.·lbf) for bolt

5.0 N·m (51 kgf·cm, 44 in.·lbf) for nut

HINT:

When installing the window regulator, tighten the bolts and nut in the order shown in the illustration.

(d) w/ Power window:

Connect the connector.

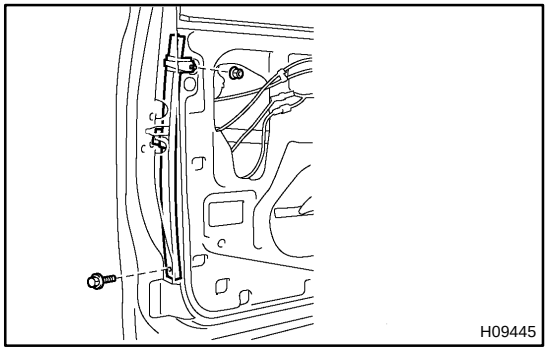

4. INSTALL REAR LOWER FRAME

Install the rear lower frame with the bolt and nut.

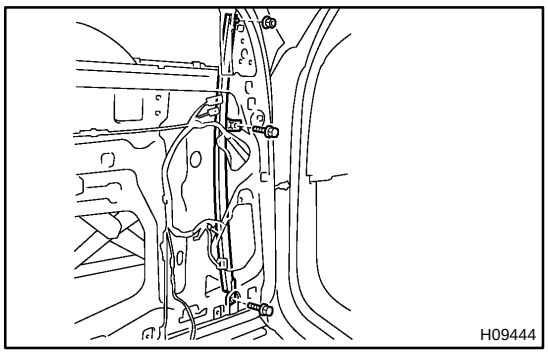

5. INSTALL FRONT LOWER FRAME

Install the front lower frame with the 2 bolts and nut.

6. INSTALL DOOR GLASS RUN

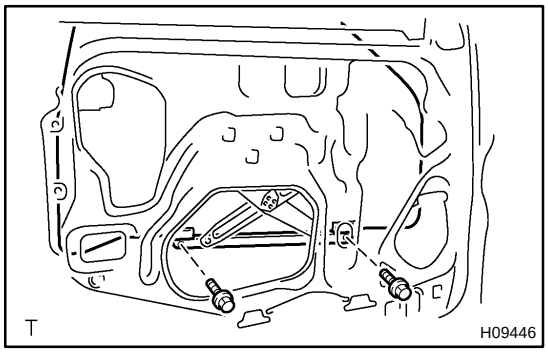

7. INSTALL DOOR GLASS

Install the door glass with the 2 bolts.

Torque: 5.0 N·m (51 kgf·cm, 44 in.·lbf)

NOTICE:

Do not damage the door glass.

8. INSTALL DOOR BELT MOULDING

9. INSTALL OUTSIDE REAR VIEW MIRROR

(a) Install the outside rear view mirror with the 3 screws.

Torque: 8.0 N·m (82 kgf·cm, 71 in.·lbf)

(b) w/ Remote control:
Connect the connector.

10. INSTALL SPEAKER

(a) Install the speaker with the 3 screws.

(b) Connect the connector.

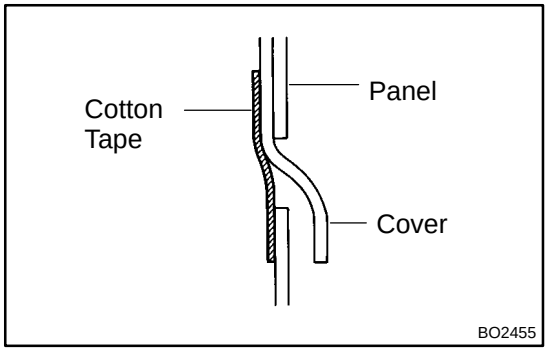

11. INSTALL SERVICE HOLE COVER

(a) Install the service hole cover.

HINT:

- When installing the service hole cover, pull out the cables and connectors through the service hole cover.
- There should be no wrinkles or folds after attaching the service hole cover.
- After attaching the service hole cover, confirm the sealing condition.

(b) Connect the clamps and connector.

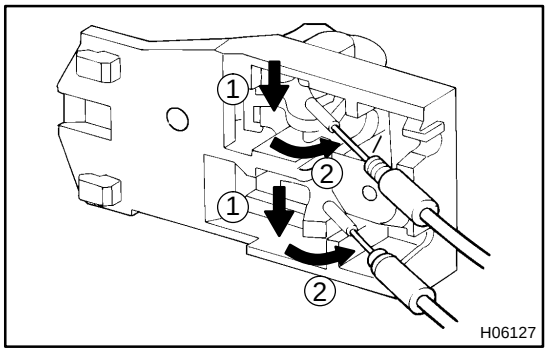

12. INSTALL INSIDE HANDLE

(a) Connect the 2 cables to the inside handle.

(b) Slide the inside handle forward to install it.

(c) Install the screw.

13. INSTALL DOOR ASSIST GRIP

Install the door assist grip to the door trim with the 2 screws.

14. INSTALL LOWER WEATHERSTRIP

15. INSTALL INNER WEATHERSTRIP

16. INSTALL DOOR TRIM

Install the door trim with the 2 screws and 2 caps.

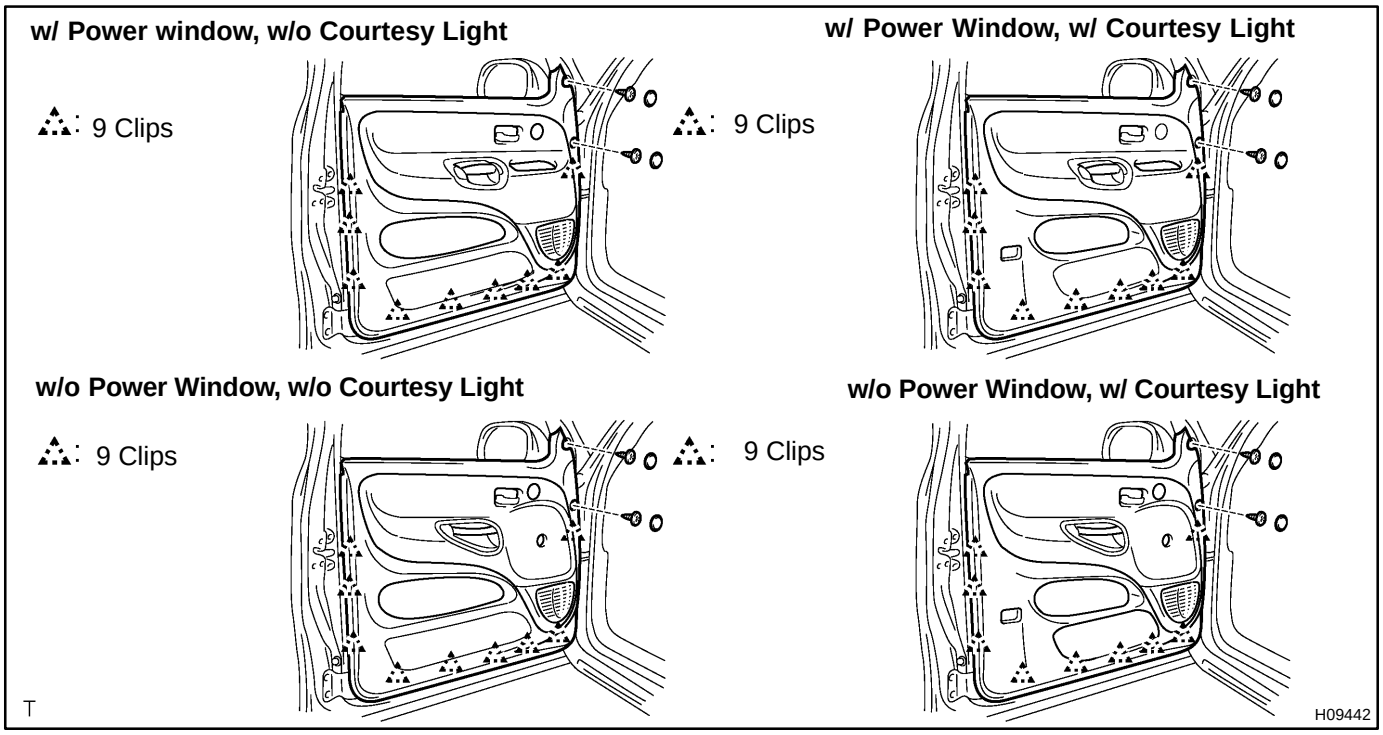

17. w/ Tweeter speaker:
INSTALL TWEETER SPEAKER

(a) Install the tweeter speaker with the 3 screws, then connect the connector.

(b) Install the tweeter speaker cover.

18. w/ Courtesy light:
INSTALL COURTESY LIGHT

(a) Connect the connector.

(b) Install the courtesy light.

19. w/o Courtesy light:
INSTALL COURTESY LIGHT COVER

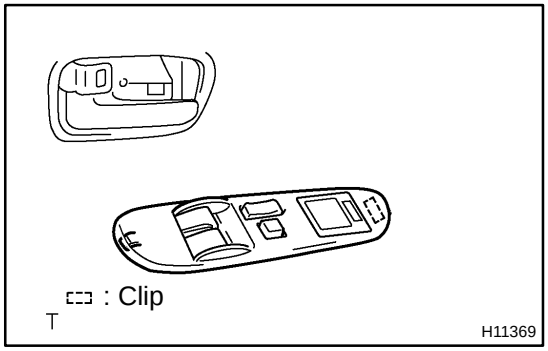

20. w/ Power window:
INSTALL POWER WINDOW SWITCH

(a) Connect the connectors.

(b) Install the power window switch.

21. INSTALL INSIDE HANDLE BEZEL

Install the inside handle bezel with the screw.

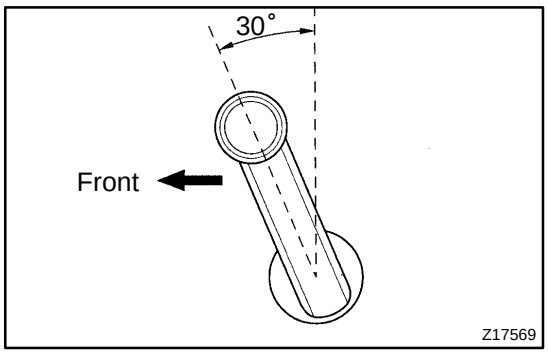

22. w/o Power window:
INSTALL REGULATOR HANDLE

Install the regulator handle with the snap ring.

HINT:

With the door window fully closed, install the plate and the regulator handle with the snap ring as shown in the illustration.

BO4PS−01

ADJUSTMENT

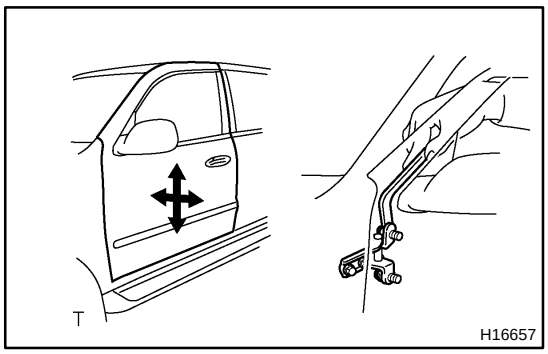

1. ADJUST DOOR IN FORWARD/REARWARD AND VERTICAL DIRECTIONS

Using SST, adjust the door by loosening the body side hinge bolts.

SST 09812−00010

Torque: 23 N·m (235 kgf·cm, 17 ft·lbf)

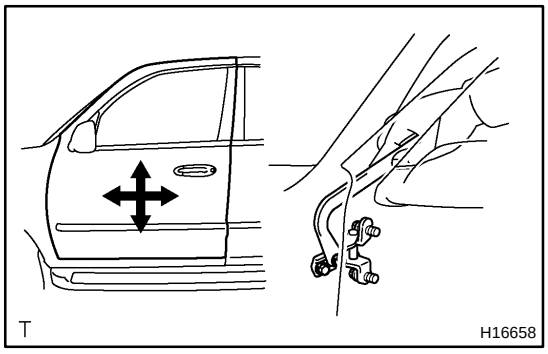

2. ADJUST DOOR IN LEFT/RIGHT AND VERTICAL DIRECTIONS

Adjust the door by loosening the door side hinge bolts.

HINT:

Substitute the standard bolt for the centering bolt (see page BO−7).

Torque: 23 N·m (235 kgf·cm, 17 ft·lbf)

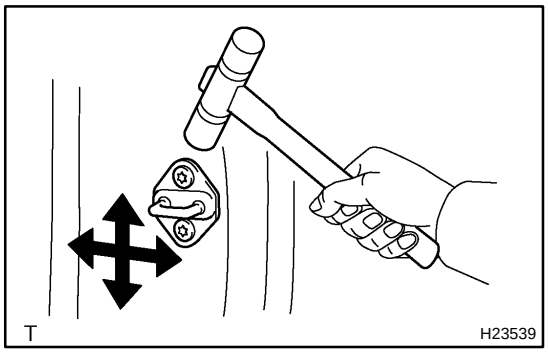

3. ADJUST DOOR LOCK STRIKER

(a) Check that the door fit and door lock linkages are adjusted correctly.

(b) Adjust the striker position by slightly loosening the striker mounting screws and hitting the striker with a hammer.

(c) Tighten the striker mounting screws again.

Torque: 23 N·m (235 kgf·cm, 17 ft·lbf)

FRONT DOOR (Double Cab)

BO4PQ−01

COMPONENTS

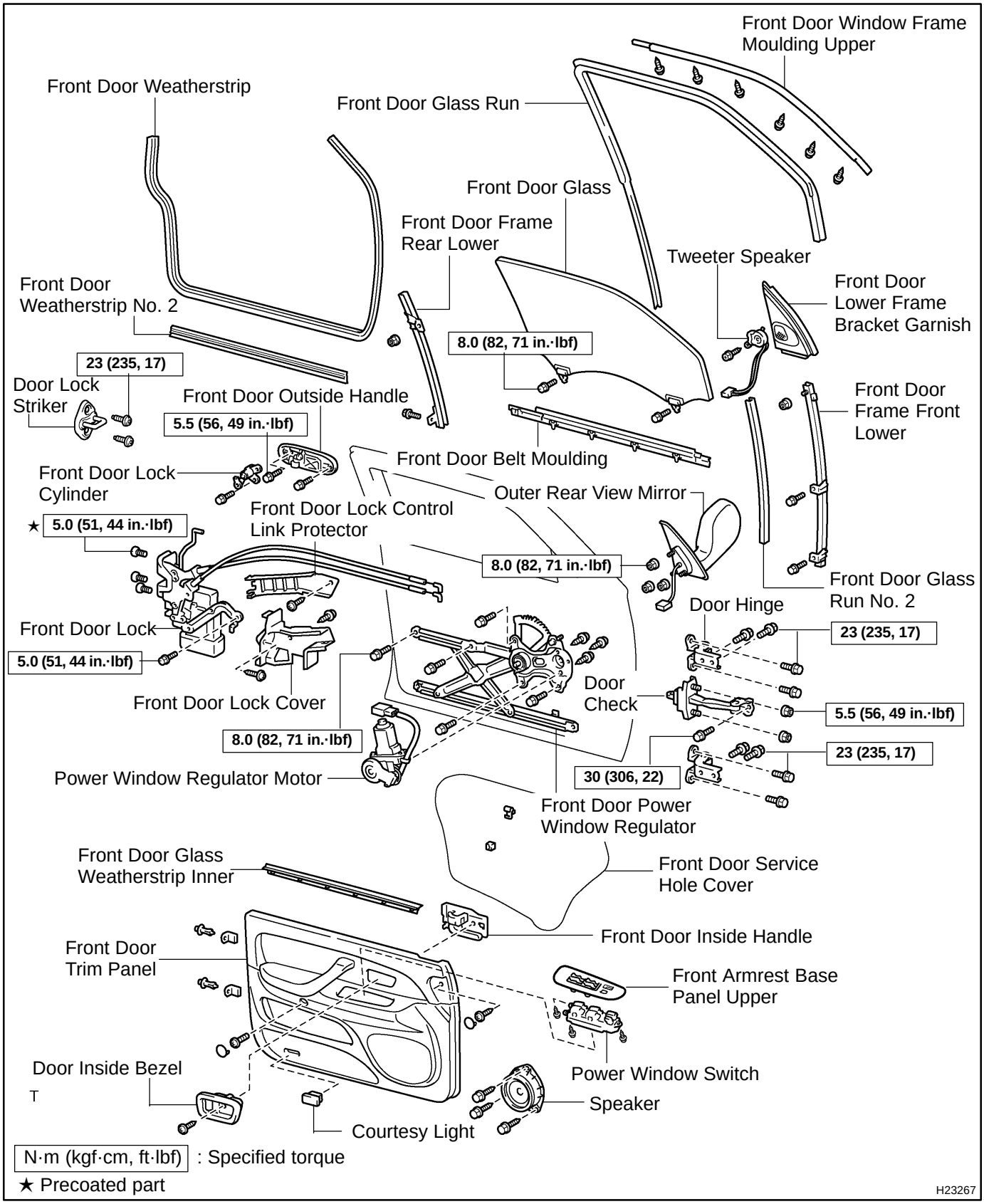

BO4PR−02

DISASSEMBLY

HINT:

A bolt without a torque specification is shown in the standard bolt chart (see page SS−2).

1. REMOVE DOOR INSIDE BEZEL

(a) Using a screwdriver, open the cover.

HINT:

Tape the screwdriver tip before use.

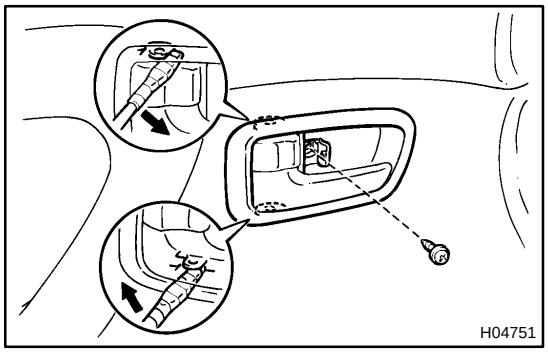

(b) Remove the screw.

(c) Using a screwdriver, remove the door inside bezel, as shown in the illustration.

HINT:

Tape the screwdriver tip before use.

2. REMOVE COURTESY LIGHT

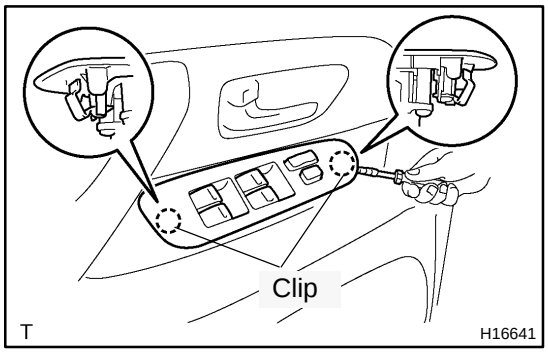

3. REMOVE FRONT ARMREST BASE PANEL UPPER WITH POWER WINDOW SWITCH

(a) Using a screwdriver, remove the front armrest base panel upper together with the power window switch.

HINT:

Tape the screwdriver tip before use.

(b) Disconnect the connector.

(c) Remove the power window switch from the front armrest base panel upper.

4. REMOVE FRONT DOOR LOWER FRAME BRACKET GARNISH

Using a screwdriver, remove the front door lower frame bracket garnish.

HINT:

Tape the screwdriver tip before use.

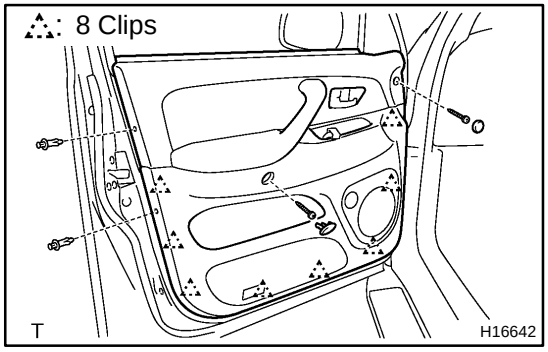

5. REMOVE FRONT DOOR TRIM PANEL

(a) Using a screwdriver, remove the 2 caps.

HINT:

Tape the screwdriver tip before use.

(b) Remove the 2 screws and 2 clips.

(c) Insert a screwdriver between the front door trim panel and front door panel to remove the front door trim panel.

HINT:

Tape the screwdriver tip before use.

(d) Pull the front door trim panel upward to remove the front door trim panel.
(e) Remove the front door glass weatherstrip inner from the front door trim panel.

6. REMOVE TWEETER SPEAKER

7. REMOVE OUTER REAR VIEW MIRROR

(a) Disconnect the connector.
(b) Remove the 3 bolts and outer rear view mirror.

8. REMOVE SPEAKER

(a) Disconnect the connector.
(b) Remove the 3 screws and speaker.

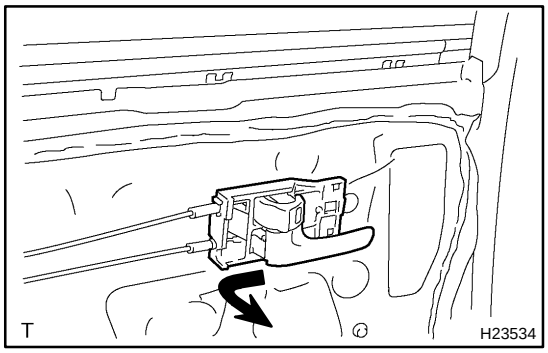

9. REMOVE FRONT DOOR INSIDE HANDLE

(a) Slide the front door inside handle backward to remove it.

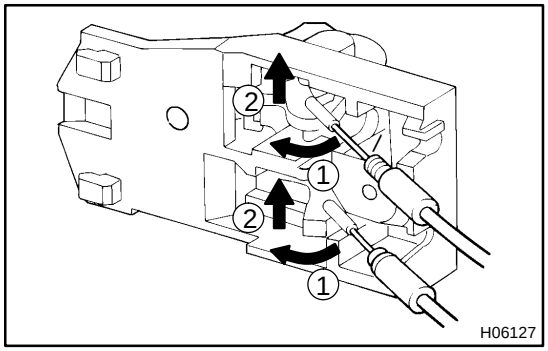

(b) Disconnect the 2 cables from the front door inside handle, as shown in the illustration.

10. REMOVE FRONT DOOR SERVICE HOLE COVER

(a) Using a clip remover, remove the clamps and grommets.
(b) Remove the front door service hole cover.

NOTICE:

Do not tear the front door service hole cover.

11. REMOVE FRONT DOOR GLASS

(a) Open the front door glass until the bolts appear in the service hole.
(b) Remove the 2 bolts.

NOTICE:

Do not damage the door glass.

(c) Pull the front door glass upward to remove it.

12. REMOVE FRONT DOOR GLASS RUN

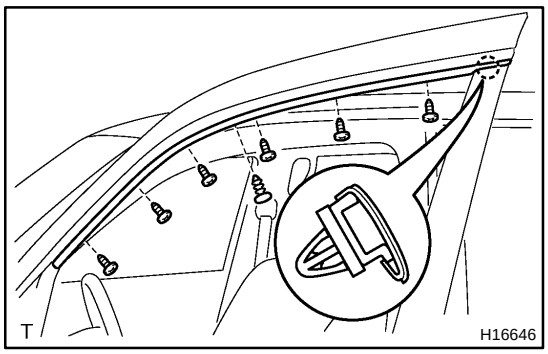

13. REMOVE FRONT DOOR WINDOW FRAME MOULDING UPPER

(a) Remove the 6 screws.

(b) Using a screwdriver or clip remover, remove the front door window frame moulding upper.

HINT:

Tape the screwdriver tip before use.

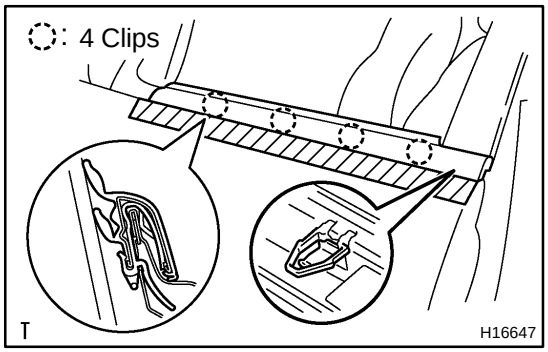

14. REMOVE FRONT DOOR BELT MOULDING

(a) Apply protective tape to the outer surface, as shown in the illustration, to prevent the vehicle surface from being scratched.

(b) Using a moulding remover, remove the front door belt moulding.

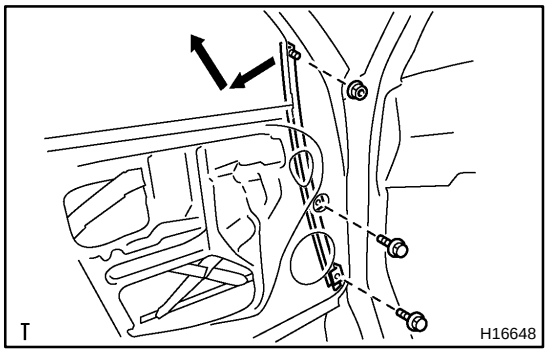

15. REMOVE FRONT DOOR FRAME FRONT LOWER

(a) Remove the 2 bolts, nut and front door frame front lower, as shown in the illustration.

(b) Remove the front door glass run No. 2 from the front door frame front lower.

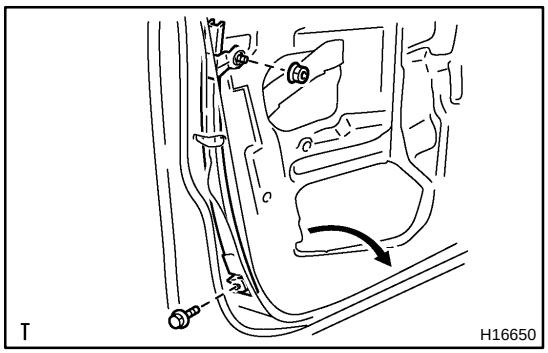

16. REMOVE FRONT DOOR FRAME REAR LOWER

Remove the bolt, nut and front door frame rear lower, as shown in the illustration.

HINT:

Remove the front door frame rear lower through the service hole.

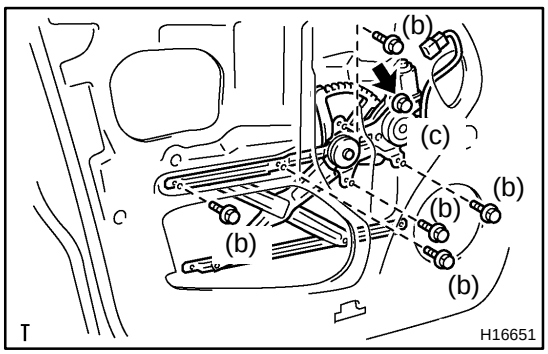

17. REMOVE FRONT DOOR POWER WINDOW REGULATOR

(a) Disconnect the connector.

(b) Remove the 5 bolts.

(c) Loosen the bolt, and remove the front door power window regulator.

HINT:

Remove the front door power window regulator through the service hole.

(d) Remove the 3 screws and power window regulator motor from the front door power window regulator.

18. REMOVE FRONT DOOR LOCK

(a) Disconnect the 2 control cables from the clamp.

(b) Remove the clamp.

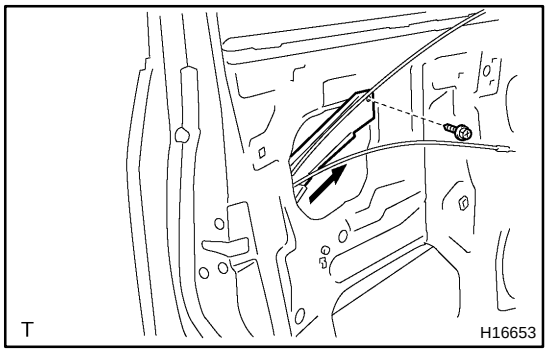

(c) Remove the screw and front door lock control link protector.

(d) Disconnect the 2 control links from the front door outside handle and front door lock cylinder.

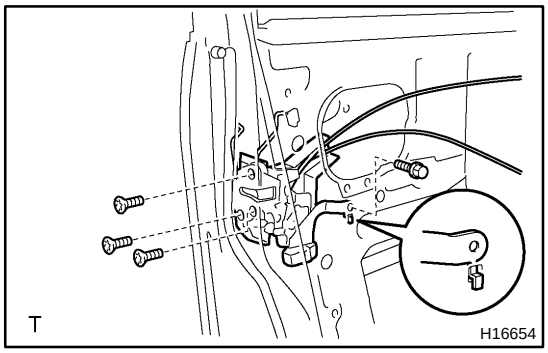

(e) Disconnect the connector and remove the bolt.

(f) Using a torx® socket wrench, remove the 3 torx® screws.

Torx® socket wrench:
T30 (Part No. 09042−00010 or locally manufactured tool)

(g) Remove the front door lock.

HINT:

Remove the front door lock through the service hole.

(h) Remove the 2 screws and front door lock cover from the front door lock.

19. REMOVE FRONT DOOR OUTSIDE HANDLE WITH LOCK CYLINDER

(a) Remove the service hole plug.

(b) Remove the 2 bolts and front door outside handle together with lock cylinder.

(c) Remove the bolt and lock cylinder from the front door outside handle.

20. REMOVE FRONT DOOR WEATHERSTRIP

Using a clip remover, remove the front door weatherstrip.

21. REMOVE FRONT DOOR WEATHERSTRIP NO. 2

BO4PT−03

REASSEMBLY

1. INSTALL FRONT DOOR WEATHERSTRIP NO. 2

2. INSTALL FRONT DOOR WEATHERSTRIP

3. INSTALL FRONT DOOR OUTSIDE HANDLE WITH LOCK CYLINDER

(a) Install the lock cylinder to the front door outside handle with the bolt.

Torque: 5.5 N·m (56 kgf·cm, 49 in.·lbf)

(b) Install the front door outside handle with lock cylinder with the 2 bolts.

Torque: 5.5 N·m (56 kgf·cm, 49 in.·lbf)

(c) Install the service hole plug.

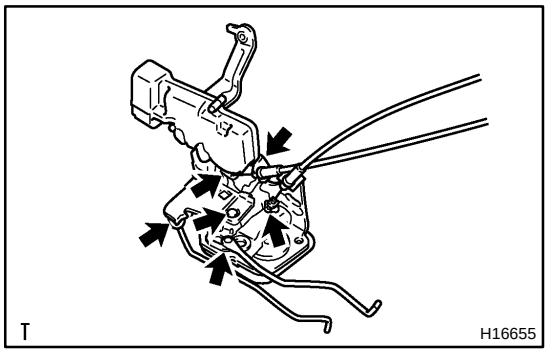

4. INSTALL FRONT DOOR LOCK

HINT:

Apply MP grease to the sliding and rotating parts of the front door lock.

(a) Install the front door lock cover to the front door lock with the 2 screws.

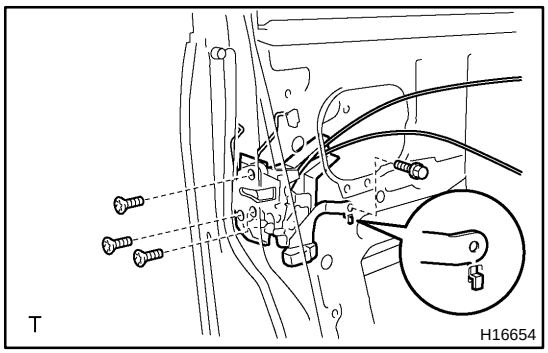

(b) Using a torx® socket wrench, install the front door lock with the 3 torx® screws.

Torx® socket wrench:

T30 (Part No. 09042−00010 or locally manufactured tool)

Torque:

5.0 N·m (51 kgf·cm, 44 in.·lbf) for bolt

5.0 N·m (51 kgf·cm, 44 in.·lbf) for screw

HINT:

Apply adhesive to the 3 screws.

Adhesive: Part No. 08833−00070, THREE BOND 1324 or equivalent.

(c) Connect the connector and tighten the bolt.

(d) Connect the 2 control links to the front door outside handle and front door lock cylinder.

(e) Install the front door lock control link protector with the screw.

(f) Install the clamp.

(g) Connect the 2 control cables to the clamp.

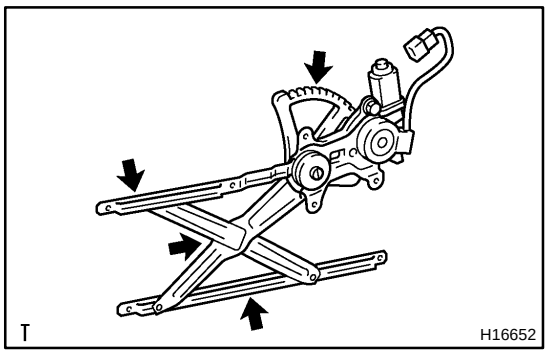

5. INSTALL FRONT DOOR POWER WINDOW REGULATOR

HINT:

Apply MP grease to the sliding and rotating parts of the front door power window regulator.

(a) Install the power window regulator motor to the front door power window regulator with the 3 screws.

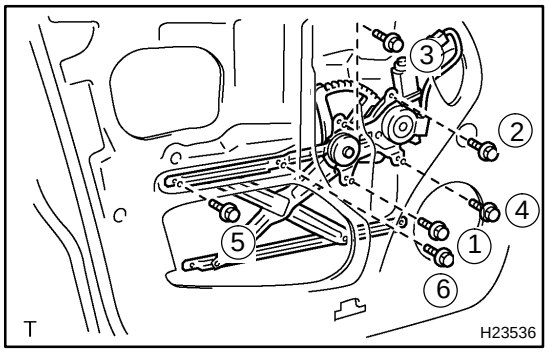

(b) Install the front door power window regulator with the 6 bolts.

Torque: 8.0 N·m (82 kgf·cm, 71 in.·lbf)

HINT:

Tighten the 6 bolts in the order shown in the illustration.

(c) Connect the connector.

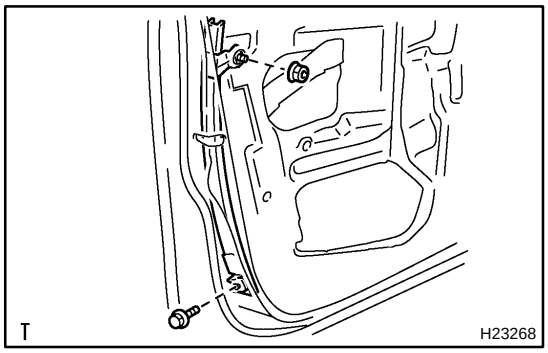

6. INSTALL FRONT DOOR FRAME REAR LOWER

Install the front door frame rear lower with the bolt and nut.

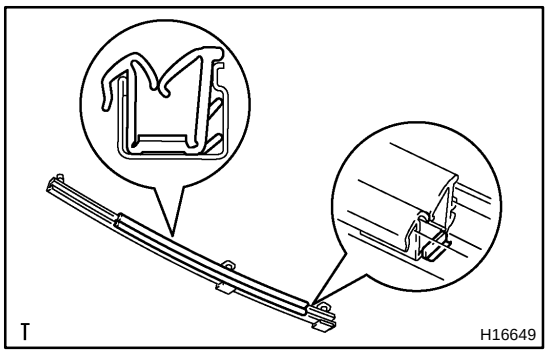

7. INSTALL FRONT DOOR FRAME FRONT LOWER

(a) Install the front door glass run No. 2 to the front door frame front lower.

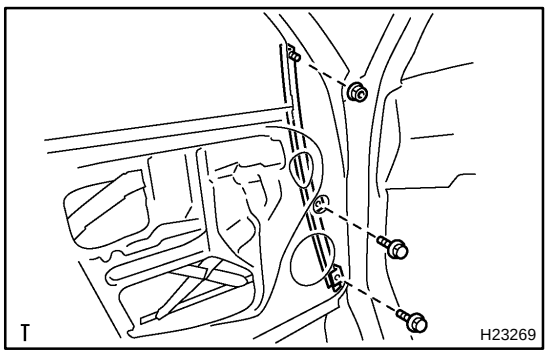

(b) Install the front door frame front lower with the 2 bolts and nut.

8. INSTALL FRONT DOOR BELT MOULDING

9. INSTALL FRONT DOOR WINDOW FRAME MOULDING UPPER

10. INSTALL FRONT DOOR GLASS RUN

11. INSTALL FRONT DOOR GLASS

Torque: 8.0 N·m (82 kgf·cm, 71 in.·lbf)

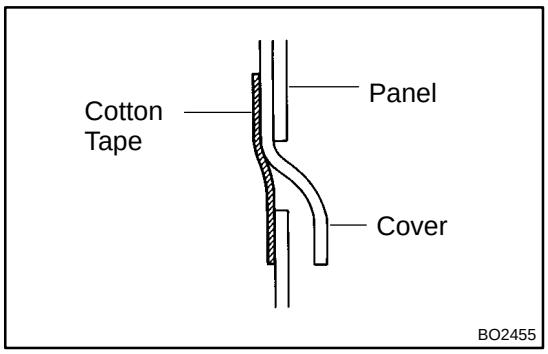

12. INSTALL FRONT DOOR SERVICE HOLE COVER

(a) Install the front door service hole cover.

HINT:

- When installing the service hole cover, pull out the cables and connectors through the service hole cover.
- There should be no wrinkles or folds after attaching the service hole cover.
- After attaching the service hole cover, confirm the sealing condition.

(b) Connect the clamps and connector.

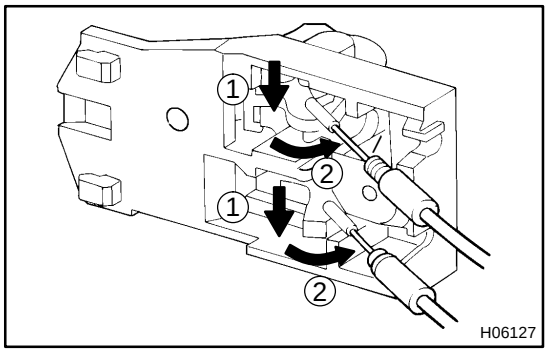

13. INSTALL FRONT DOOR INSIDE HANDLE

(a) Connect the 2 cables to the inside handle.

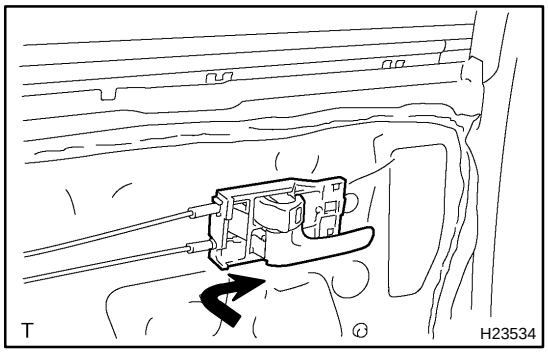

(b) Slide the inside handle forward to install it.

14. INSTALL SPEAKER

15. INSTALL OUTER REAR VIEW MIRROR
Torque: 8.0 N·m (82 kgf·cm, 71 in.·lbf)

16. INSTALL TWEETER SPEAKER

17. INSTALL FRONT DOOR TRIM PANEL

18. INSTALL FRONT DOOR LOWER FRAME BRACKET GARNISH

19. INSTALL FRONT ARMREST BASE PANEL UPPER WITH POWER WINDOW SWITCH

20. INSTALL COURTESY LIGHT

21. INSTALL DOOR INSIDE BEZEL

FRONT SEAT (Separate Type: Manual Adjuster)

BO4SB−03

COMPONENTS

HINT:

The procedures listed below are for the LH side.

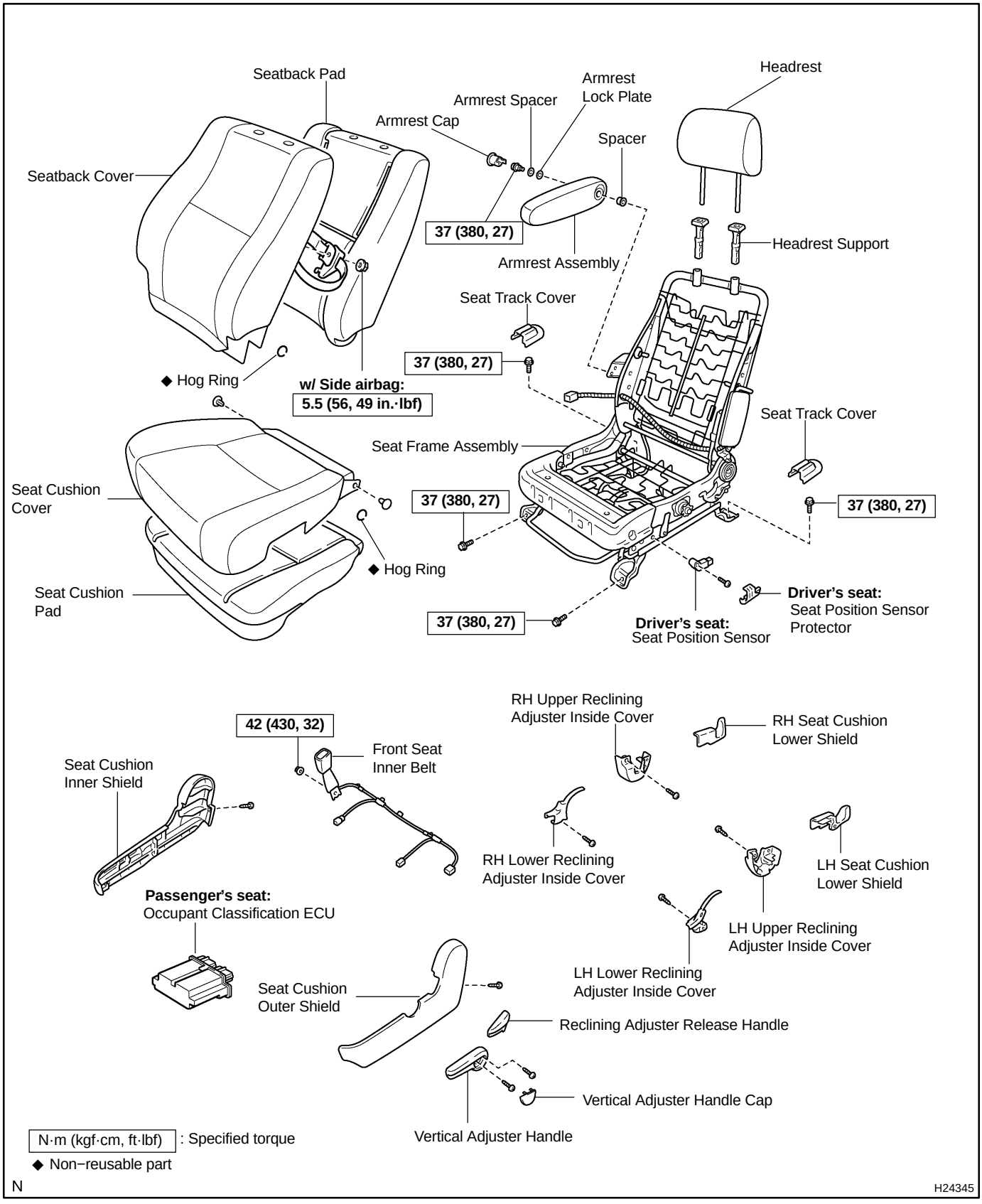

N

H24345

BO4SD−01

DISASSEMBLY

CAUTION:

Wear safety gloves, because the sharp edges and surfaces of the seat frame may cause injury to the hands.

HINT:

- The procedures listed below are for the LH side.
- Tape the screwdriver tip before using it to remove the parts.

1. REMOVE HEADREST

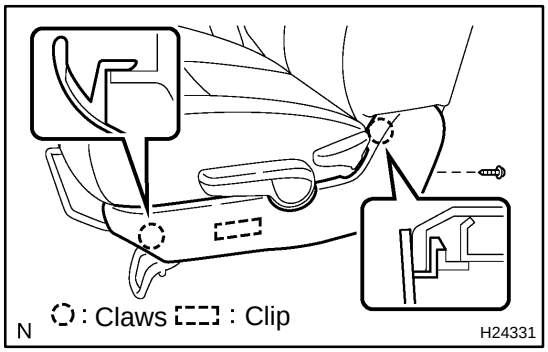

2. REMOVE SEAT CUSHION OUTER SHIELD

(a) Remove the screw from the seat cushion outer shield.

(b) Using a screwdriver, remove the seat cushion outer shield.

HINT:

Tape the screwdriver tip before use.

3. REMOVE RECLINING ADJUSTER RELEASE HANDLE

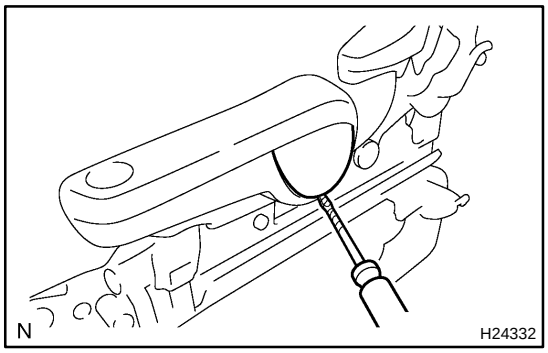

4. REMOVE VERTICAL ADJUSTER HANDLE

(a) Using a screwdriver, remove the vertical adjuster handle cap.

HINT:

Tape the screwdriver tip before use.

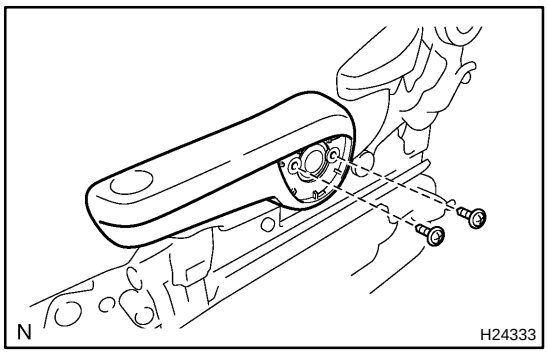

(b) Remove the 2 screws and the vertical adjuster handle.

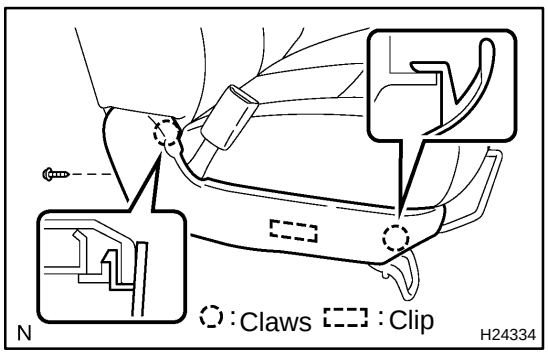

5. REMOVE SEAT CUSHION INNER SHIELD

(a) Remove the screw from the seat cushion inner shield.

(b) Using a screwdriver, remove the seat cushion inner shield.

HINT:

Tape the screwdriver tip before use.

6. REMOVE FRONT SEAT INNER BELT

(a) Disconnect the wire harness clamps and connectors.

(b) Remove the nut and front seat inner belt.

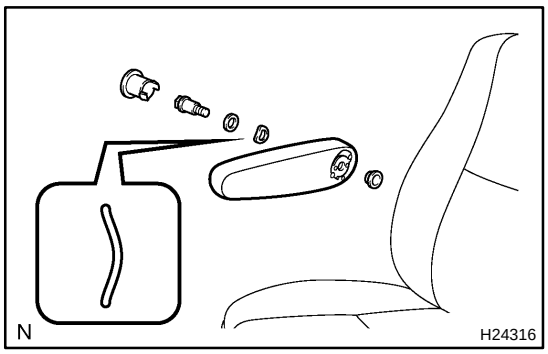

7. REMOVE ARMREST ASSEMBLY

(a) Using a screwdriver, remove the armrest cap.

(b) Remove the bolt, armrest spacer, armrest lock plate and armrest assembly.

(c) Remove the spacer from the armrest assembly.

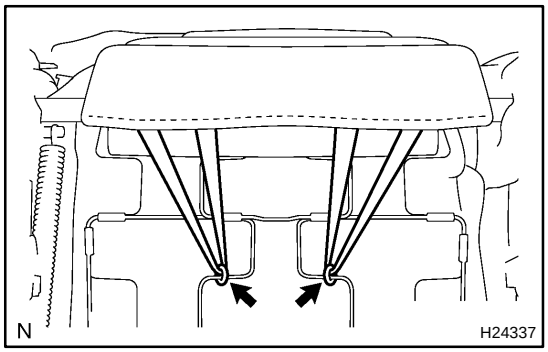

8. REMOVE SEATBACK COVER AND PAD

(a) Remove the hog rings from the seat frame assembly.

(b) Open the fastener.

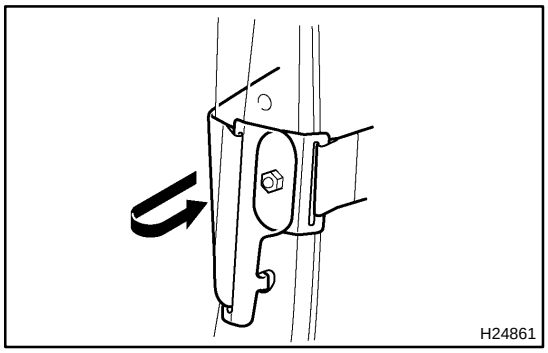

(c) w/ Side airbag:
Remove the nut and disconnect the seatback cover bracket from the seat frame assembly.

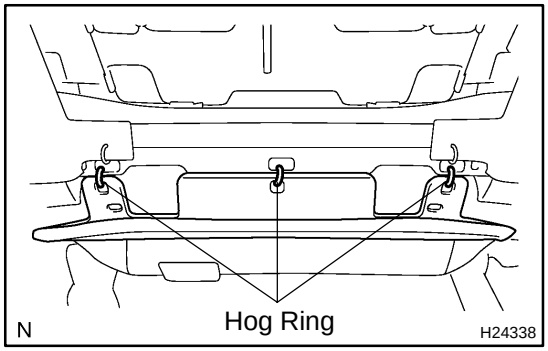

(d) Remove the hog rings shown in the illustration from the seat frame assembly.

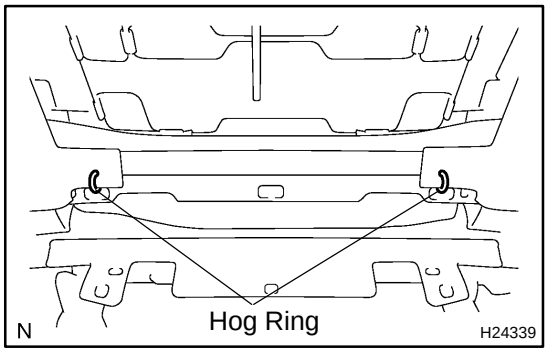

(e) Remove the hog rings shown in the illustration from the seat frame assembly.

(f) Remove the seatback cover and pad from the seat frame assembly.

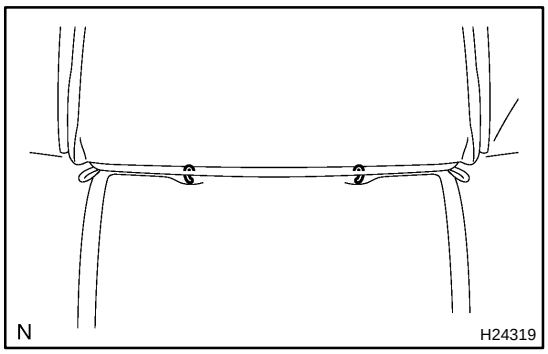

9. REMOVE SEATBACK COVER

(a) Turn up the seatback cover and remove the hog rings.
(b) Remove the 2 headrest supports.
(c) Remove the seatback cover from the seatback pad.

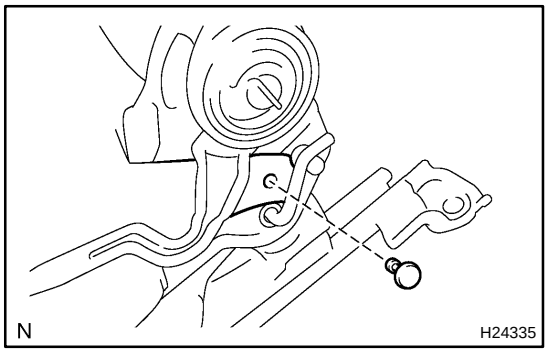

10. REMOVE SEAT CUSHION COVER AND PAD

(a) Remove the clip.
(b) Perform the same procedure on the other side.

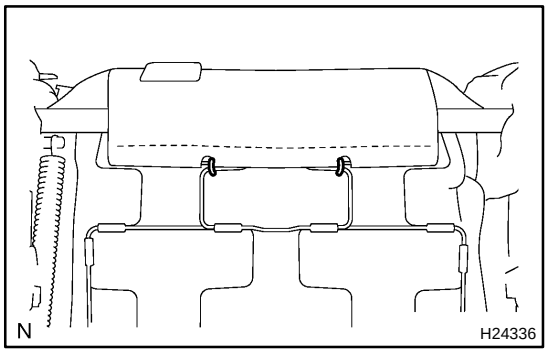

(c) Remove the hog rings from the seat cushion cover.
(d) Unlatch the seat cushion cover hooks, then remove the seat cushion cover with seat cushion pad.

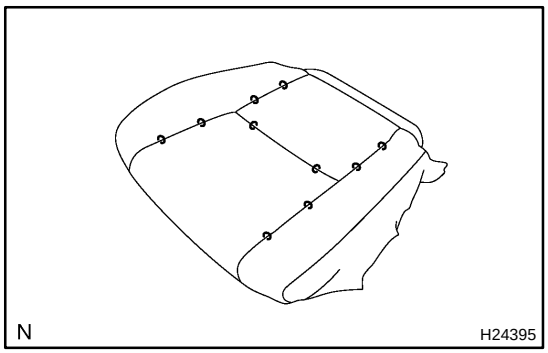

11. REMOVE SEAT CUSHION COVER

Remove the hog rings and seat cushion cover from the seat cushion pad.

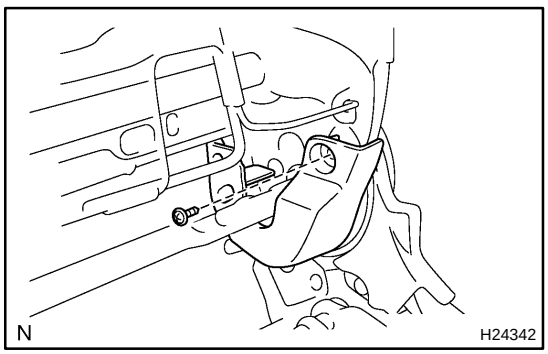

12. REMOVE RH AND LH UPPER RECLINING ADJUSTER INSIDE COVERS

(a) Remove the screw and LH upper reclining adjuster inside cover.
(b) Perform the same procedure on the other side.

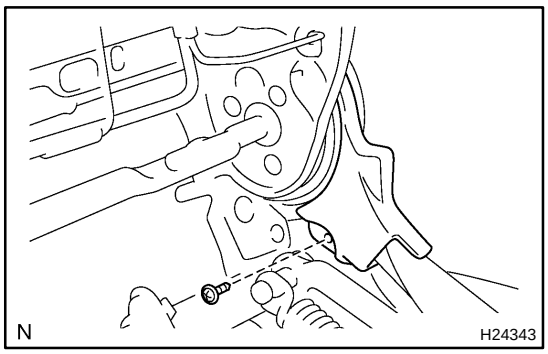

13. REMOVE RH AND LH LOWER RECLINING ADJUSTER INSIDE COVERS

(a) Remove the screw and LH lower reclining adjuster inside cover.

(b) Perform the same procedure on the other side.

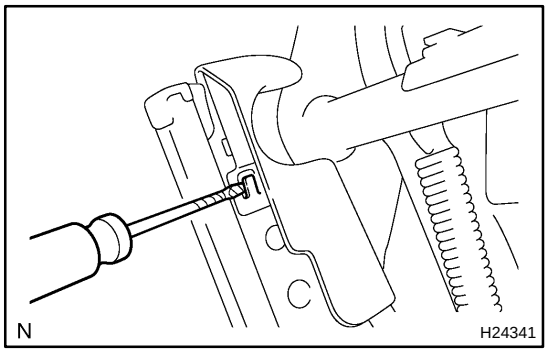

14. REMOVE RH AND LH SEAT CUSHION LOWER SHIELDS

(a) Using a screwdriver, disengage the claw and remove the LH seat cushion lower shield.

HINT:

Tape the screwdriver tip before use.

(b) Perform the same procedure on the other side.

15. Driver's seat:
REMOVE SEAT POSITION SENSOR
(See page RS−118)

BO4SF−04

INSTALLATION

HINT:

The procedures listed below are for the LH side.

1. INSTALL FRONT SEAT

(a) Mount the front seat to the vehicle.

NOTICE:

Be careful not to damage the vehicle body.

(b) w/ Side airbag:
Connect the airbag connector.

(c) Connect the connectors.

(d) Slide the front seat to the rearmost position.

(e) Tighten the bolts on the front side temporarily, starting from the bolt on the inner side.

(f) Tighten them completely.
Torque: 37 N·m (380 kgf·cm, 27 ft·lbf)

(g) Slide the front seat to the foremost position.

(h) Tighten the bolts on the rear side temporarily, starting from the bolt on the inner side.

(i) Tighten them completely.
Torque: 37 N·m (380 kgf·cm, 27 ft·lbf)

2. INSTALL SEAT TRACK COVERS

3. CONNECT CABLE TO NEGATIVE BATTERY TERMINAL

4. Passenger's seat:
PERFORM PASSENGER OCCUPANT CLASSIFICATION SYSTEM ZERO POINT CALIBRATION (See page DI−1829)

BO4SE−01

REASSEMBLY

CAUTION:

Wear safety gloves, because the sharp edges and surfaces of the seat frame may cause injury to the hands.

HINT:

- The procedures listed below are for the LH side.
- A bolt without a torque specification is shown in the standard bolt chart (see page SS−2).

1. Driver's seat:
INSTALL SEAT POSITION SENSOR
(SEE PAGE RS−122)

2. INSTALL RH AND LH SEAT CUSHION LOWER SHIELDS

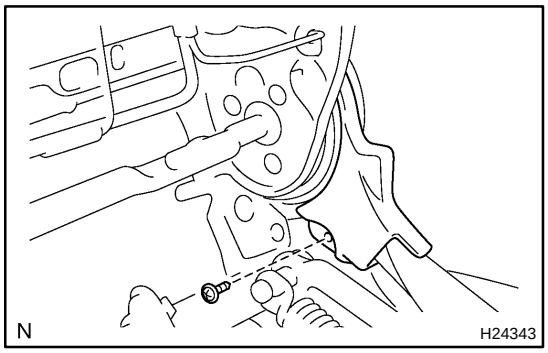

3. INSTALL RH AND LH LOWER RECLINING ADJUSTER INSIDE COVERS

(a) Install the LH lower reclining adjuster inside cover with the screw.

(b) Perform the same procedure on the other side.

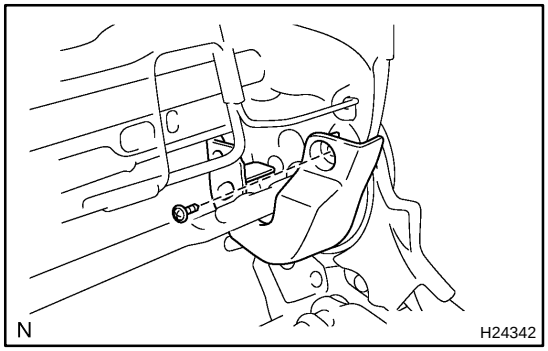

4. INSTALL RH AND LH UPPER RECLINING ADJUSTER INSIDE COVERS

(a) Install the LH upper reclining adjuster inside cover with the screw.

(b) Perform the same procedure on the other side.

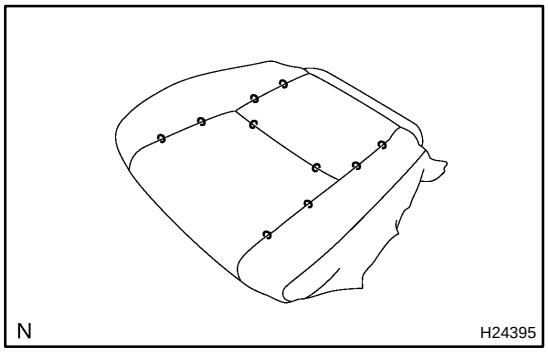

5. INSTALL SEAT CUSHION COVER

Install the seat cushion cover to the seat cushion pad with the hog rings.

HINT:

When installing the hog rings, take as much care as possible to prevent wrinkles.

6. INSTALL SEAT CUSHION COVER AND PAD

(a) Install the seat cushion cover with seat cushion pad, and latch the seat cushion cover hooks.

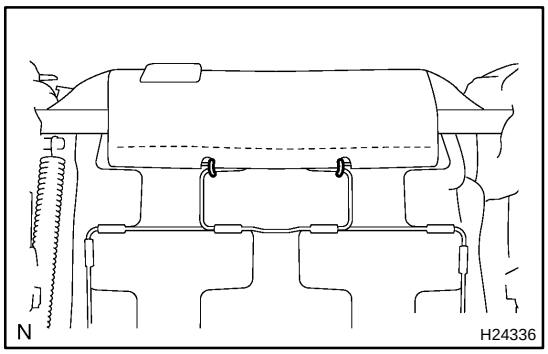

(b) Install the hog rings to the seat cushion cover.

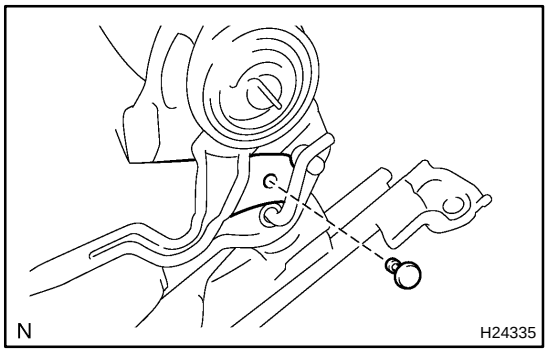

(c) Install the clip.
(d) Perform the same procedure on the other side.

7. INSTALL SEATBACK COVER

(a) Install the seatback cover to the seatback pad.
(b) Install the 2 headrest supports.

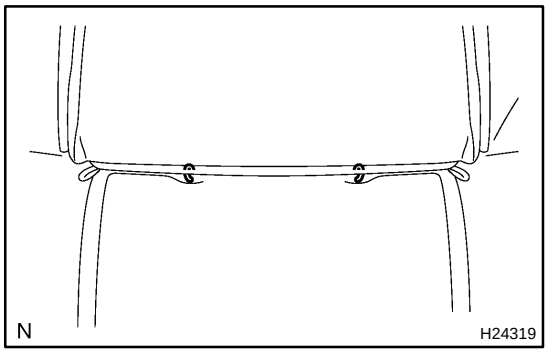

(c) Turn up the seatback cover and install the hog rings.

8. INSTALL SEATBACK COVER AND PAD

(a) Install the seatback cover and pad to the seat frame assembly.

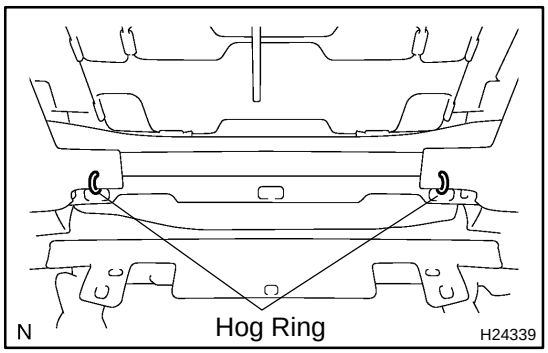

(b) Install the hog rings to the seat frame assembly.

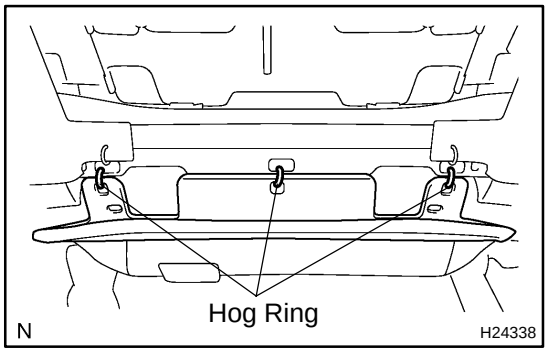

(c) Install the hog rings to the seat frame assembly.

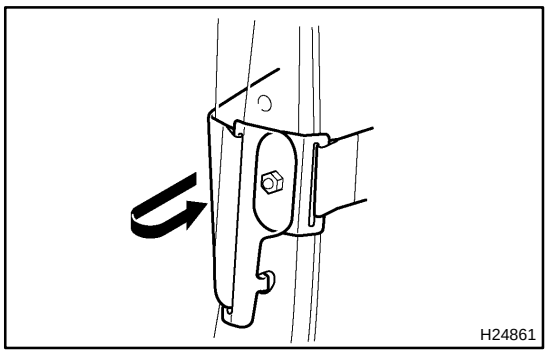

(d) w/ Side airbag:
Connect the seatback cover bracket to the seat frame assembly with the nut.
Torque: 5.5 N·m (56 kgf·cm, 49 in.·lbf)

(e) Close the fastener.

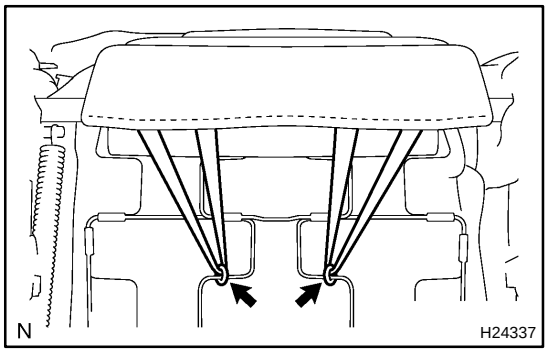

(f) Install the hog rings to the seat frame assembly.

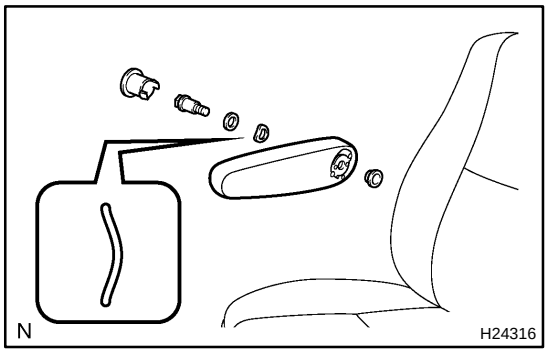

9. INSTALL ARMREST ASSEMBLY

(a) Install the spacer to the armrest assembly.

(b) Install the armrest assembly, armrest lock plate and armrest spacer with the bolt.
Torque: 37 N·m (380 kgf·cm, 27 ft·lbf)

HINT:
Install the armrest lock plate as shown in the illustration.

(c) Install the armrest cap.

10. INSTALL FRONT SEAT INNER BELT.

(a) Install the front seat inner belt with the nut.
Torque: 42 N·m (430 kgf·cm, 32 ft·lbf)

(b) Connect the connectors and wire harness clamps.

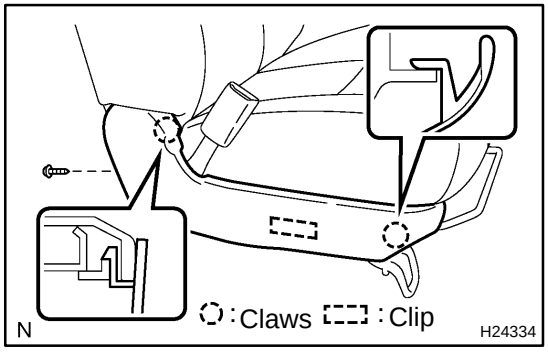

11. INSTALL SEAT CUSHION INNER SHIELD

Install the seat cushion inner shield with the screw.

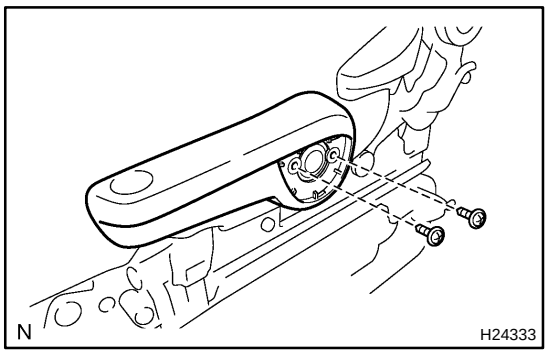

12. INSTALL VERTICAL ADJUSTER HANDLE

(a) Install the vertical adjuster handle with the 2 screws.

(b) Install the vertical adjuster handle cap.

13. INSTALL RECLINING ADJUSTER RELEASE HANDLE

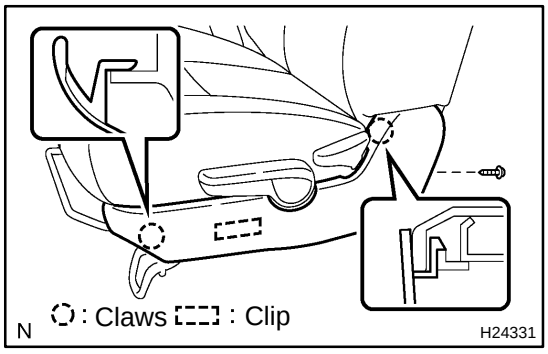

14. INSTALL SEAT CUSHION OUTER SHIELD

Install the seat cushion outer shield with the screw.

15. INSTALL HEADREST

BO4SC−01

REMOVAL

CAUTION:

Work must not be started until at least 90 seconds after the ignition switch is turned to the LOCK position and the negative (−) terminal cable is disconnected from the battery.

(The SRS is equipped with a back−up power source. If work is started within 90 seconds from disconnecting the negative (−) terminal cable of the battery, the SRS may deploy.)

NOTICE:

When removing/installing and overhauling the passenger seat, check the passenger occupant classification system and perform the zero point calibration (see page DI−1829).

HINT:

The procedures listed below are for the LH side.

1. DISCONNECT CABLE FROM NEGATIVE BATTERY TERMINAL

Wait for 90 seconds after disconnecting the cable to prevent the airbag working.

2. REMOVE SEAT TRACK COVERS

Using a screwdriver, remove the seat track covers.

HINT:

Tape the screwdriver tip before use.

3. REMOVE FRONT SEAT

(a) Remove the 4 bolts.

(b) Disconnect the connectors.

(c) w/ Side airbag:
Disconnect the airbag connector.

(d) Remove the front seat.

NOTICE:

Be careful not to damage the vehicle body.

FRONT SEAT (Bench Type)

COMPONENTS

BO0JS−08

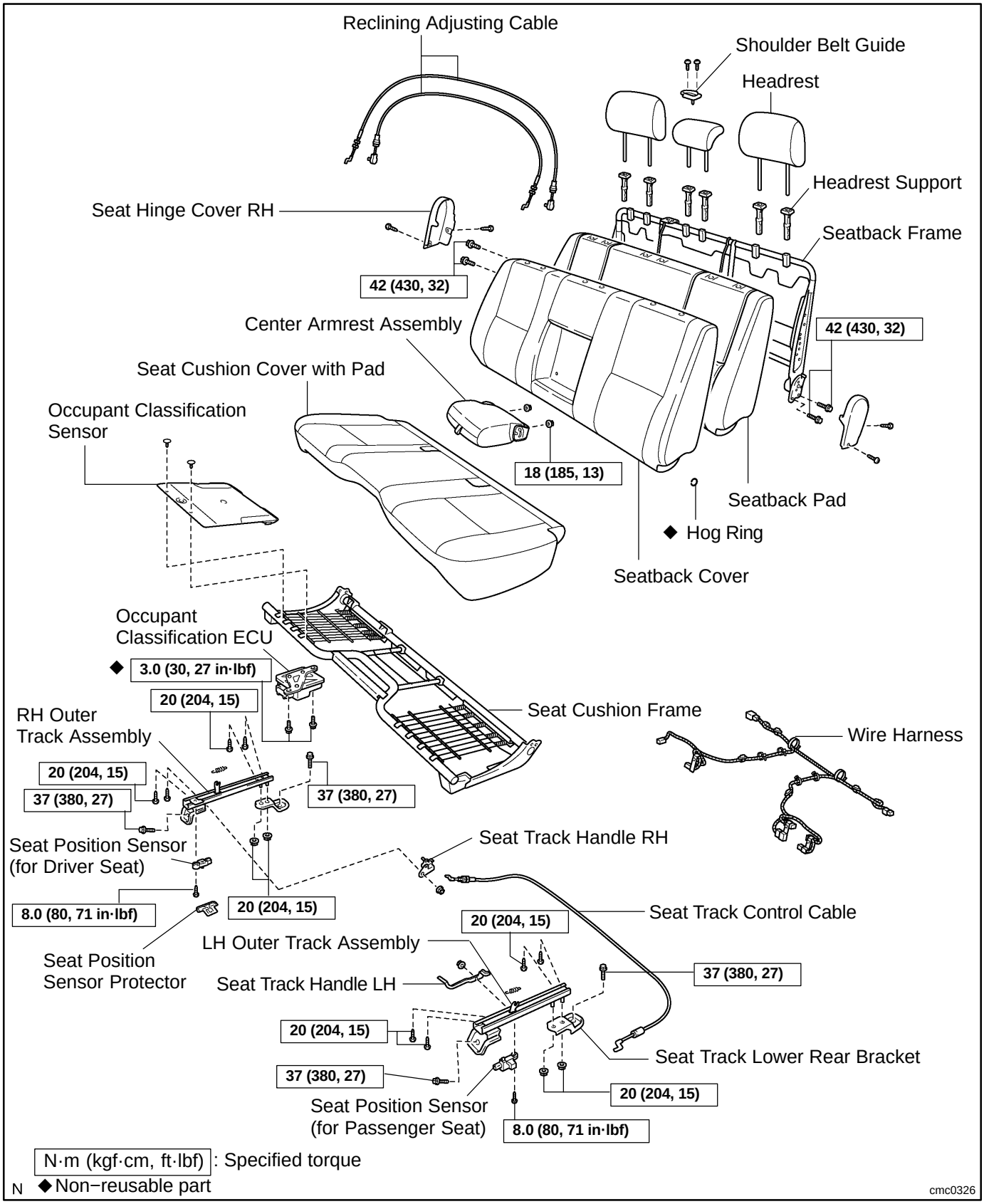

BO4SS−03

DISASSEMBLY

CAUTION:

Wear safety gloves, because the sharp edges and surfaces of the seat frame may cause injury to the hands.

HINT:

Tape the screwdriver tip before using it to remove the parts.

1. REMOVE OCCUPANT CLASSIFICATION ECU
(See page RS−154)

2. REMOVE HEADRESTS

3. REMOVE SEAT HINGE COVER LH

Remove the 2 screws and seat hinge cover LH.

4. REMOVE SEAT HINGE COVER RH

Remove the 2 screws and seat hinge cover RH.

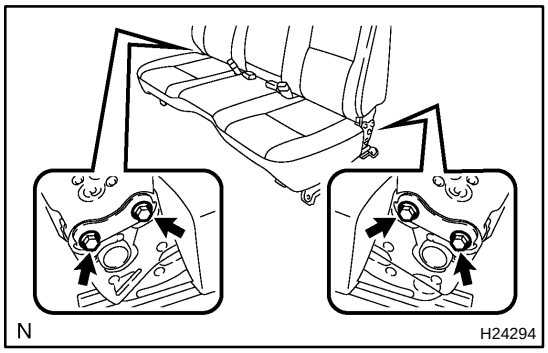

5. REMOVE SEATBACK ASSEMBLY

Remove the 4 bolts and seatback assembly.

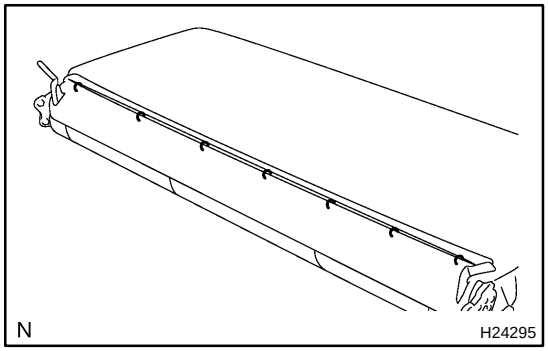

6. REMOVE CENTER ARMREST ASSEMBLY

(a) Remove the hog rings and turn the seatback cover over.

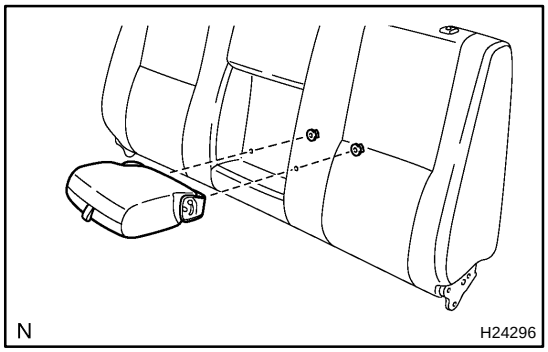

(b) Remove the 2 nuts and center armrest assembly from the seatback frame.

7. REMOVE SEATBACK FRAME

(a) Remove the 6 headrest supports from the seatback assembly.

(b) Remove the 2 screws and shoulder belt guide.

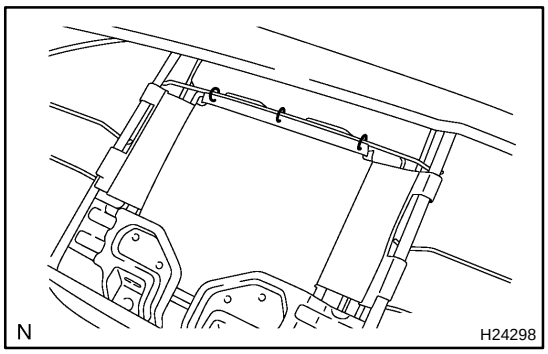

(c) Remove the hog rings from the seatback frame.
(d) Remove the seatback frame from the seatback pad and cover.

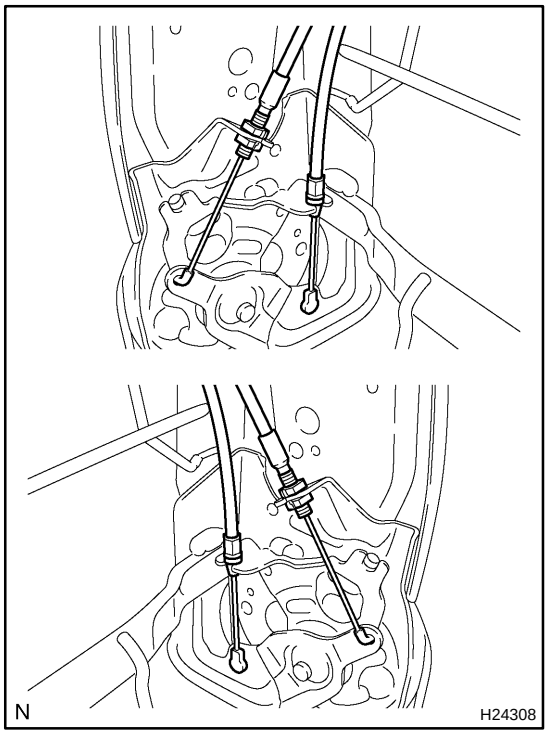

(e) Disconnect the clamp.
(f) Loosen the adjusting nuts.

HINT:

When loosening the nuts, hold one and loosen the other.

(g) Perform the same procedure on the other side.
(h) Remove the reclining adjusting cables.

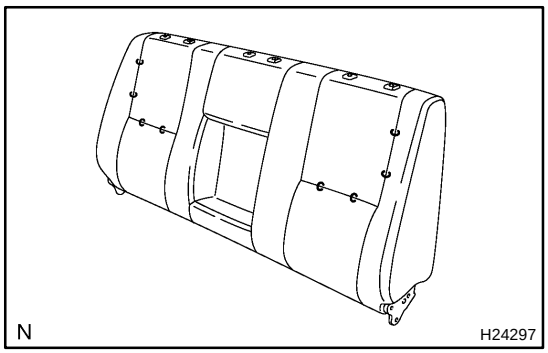

8. REMOVE SEATBACK COVER

Remove the hog rings and seatback cover.

9. REMOVE SEAT POSITION SENSOR (For Driver Seat) (See page RS−118)

10. REMOVE SEAT POSITION SENSOR (For Front Passenger Seat) (See page RS−145)

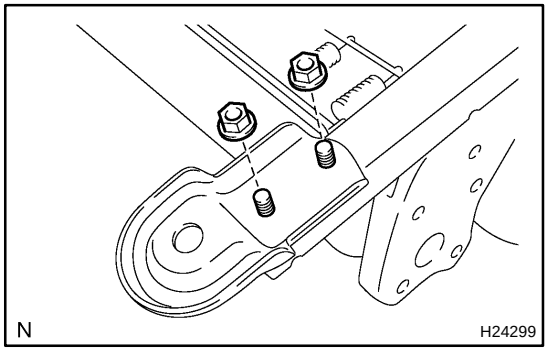

11. REMOVE 2 SEAT TRACK LOWER REAR BRACKETS

(a) Remove the 2 nuts and seat track lower rear bracket.
(b) Perform the same procedure on the other side.

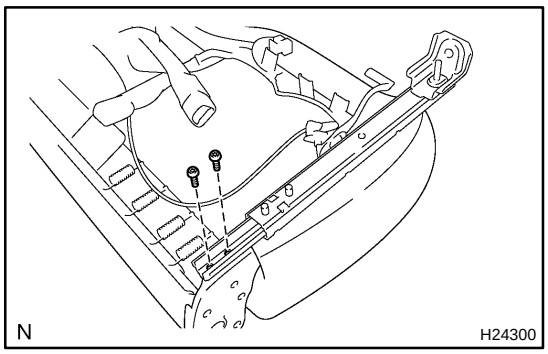

12. REMOVE LH OUTER TRACK ASSEMBLY

(a) Slide the LH outer track assembly until the torx® screws on the rear side can be seen.

(b) Using a torx® socket wrench, remove the 2 torx® screws from the LH outer track assembly rear side.

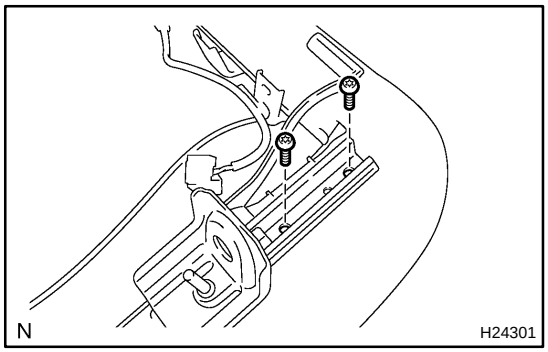

(c) Slide the LH outer track assembly until the torx® screws on the front side can be seen.

(d) Using a torx® socket wrench, remove the 2 torx® screws from the LH outer track assembly front side, and remove the LH outer track assembly.

13. REMOVE RH OUTER TRACK ASSEMBLY

HINT:

Perform the same procedure on the other side.

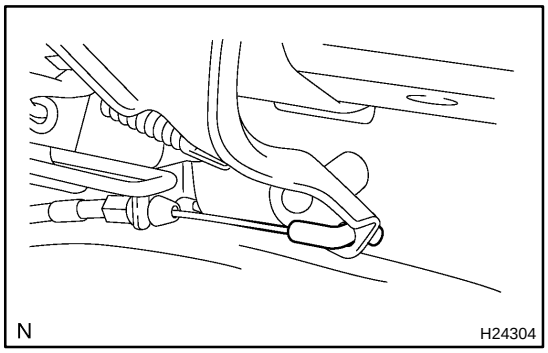

14. REMOVE SEAT TRACK HANDLE LH

(a) Disconnect the seat track control cable.

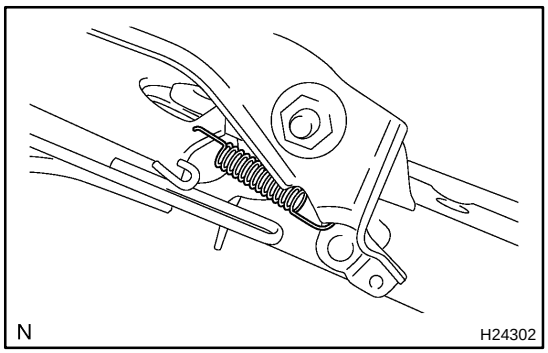

(b) Remove the spring.

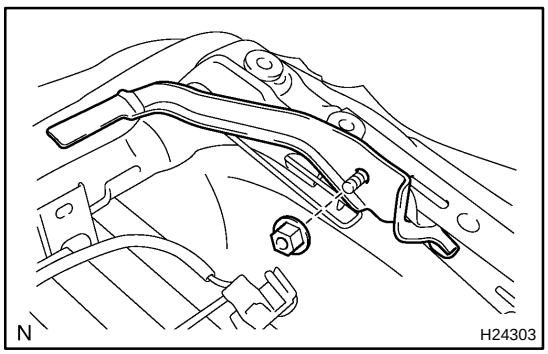

(c) Remove the nut and seat track handle LH.

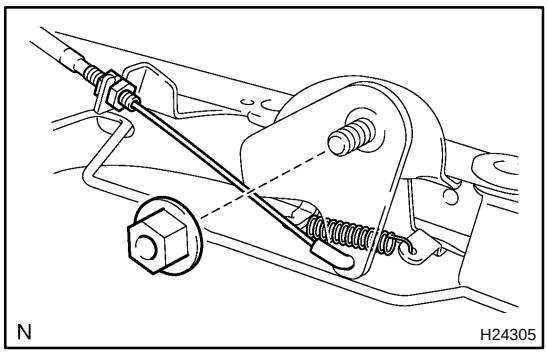

15. REMOVE SEAT TRACK HANDLE RH

(a) Loosen the adjusting nuts.

HINT:

When loosening the nuts, hold one and loosen the other.

(b) Disconnect the seat track control cable.

(c) Remove the spring.

(d) Remove the nut and seat track handle RH.

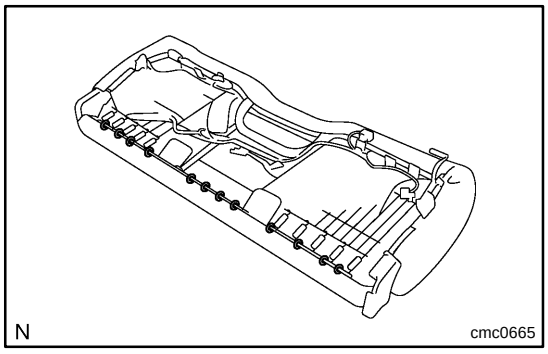

16. REMOVE SEAT CUSHION FRAME

(a) Remove the hog rings.

(b) Cut the band clamps.

(c) Disengage the clips.

(d) Remove the seat cushion frame from the seat cushion pad and cover.

HINT:

If the seat cushion cover needs to be replaced, replace it with the front seat cushion assembly (service kit) (see page RS−160).

17. REMOVE OCCUPANT CLASSIFICATION SENSOR (See page RS−160)

BO4QN−03

INSTALLATION

1. INSTALL FRONT SEAT

(a) Mount the front seat to the vehicle.

NOTICE:

Be careful not to damage the vehicle body.

(b) Connect the connectors.

(c) Install the 4 bolts.

Torque: 37 N·m (380 kgf·cm, 27 ft·lbf)

BO4ST−03

REASSEMBLY

CAUTION:

Wear safety gloves, because the sharp edges and surfaces of the seat frame may cause injury to the hands.

HINT:

A bolt without a torque specification is shown in the standard bolt chart (See page SS−2).

1. INSTALL OCCUPANT CLASSIFICATION SENSOR (See page RS−162)

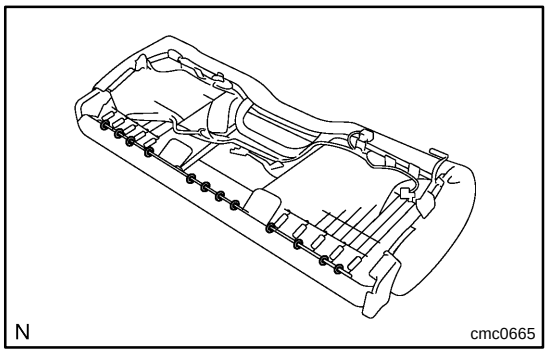

2. INSTALL SEAT CUSHION FRAME

(a) Install the seat cushion frame to the seat cushion pad and cover with the hog rings.

HINT:

When installing the hog rings, take as much care as possible to prevent wrinkles.

(b) Engage the clips.

(c) Install the seat cushion cover with band clamps.

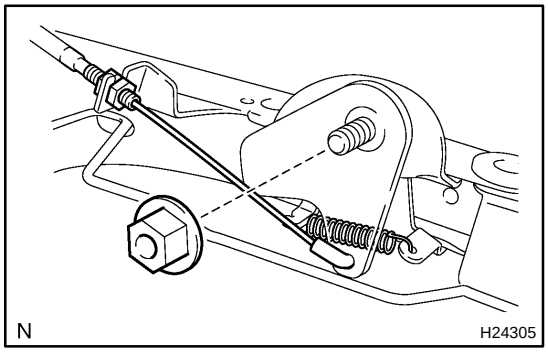

3. INSTALL SEAT TRACK HANDLE RH

(a) Install the seat track handle RH with the nut.

(b) Install the spring.

(c) Connect the seat track control cable.

(d) Tighten the adjusting nuts.

HINT:

When tightening the nuts, hold one and tighten the other.

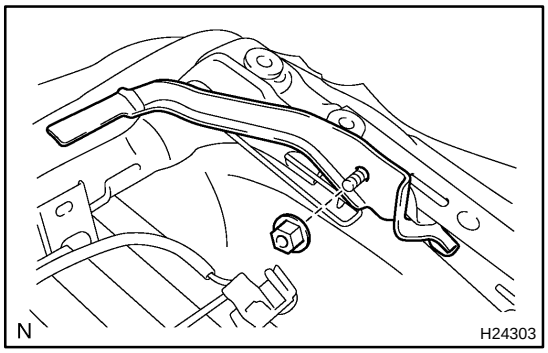

4. INSTALL SEAT TRACK HANDLE LH

(a) Install the seat track handle LH with the nut.

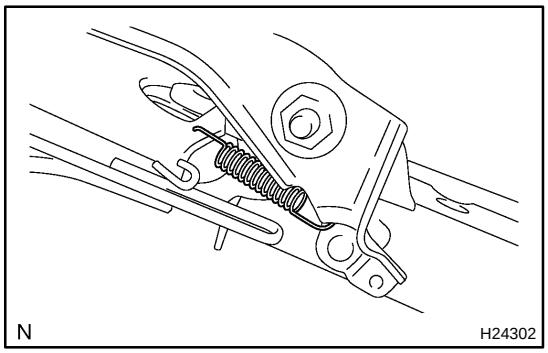

(b) Install the spring.

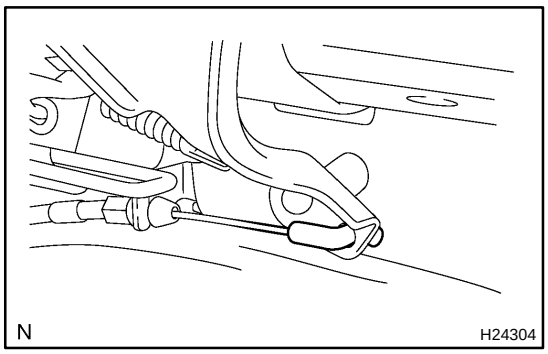

(c) Connect the seat track control cable.

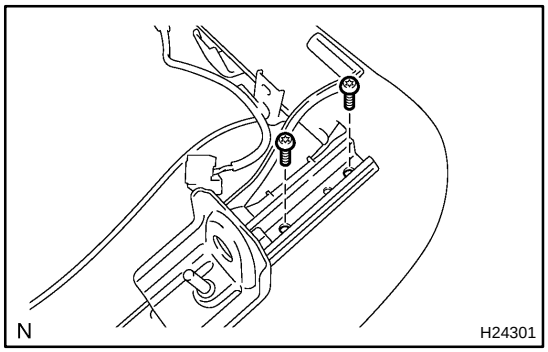

5. INSTALL LH OUTER TRACK ASSEMBLY

(a) Slide the LH outer track assembly until the torx® screws on the front side can be seen.

(b) Using a torx® socket wrench, install the 2 torx® screws to the LH outer track assembly front side.
Torque: 20 N·m (204 kgf·cm, 15 ft·lbf)

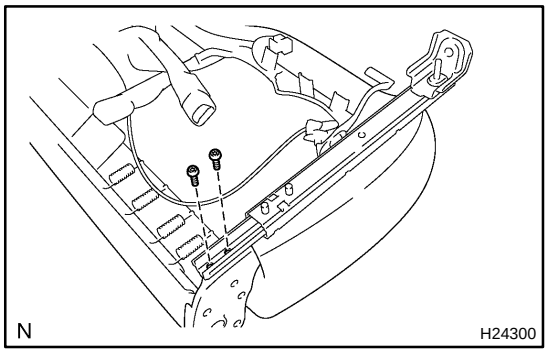

(c) Slide the LH outer track assembly until the torx® screws on the rear side can be seen.

(d) Using a torx® socket wrench, install the 2 torx® screws to the LH outer track assembly rear side.
Torque: 20 N·m (204 kgf·cm, 15 ft·lbf)

6. INSTALL RH OUTER TRACK ASSEMBLY

HINT:
Perform the same procedure on the other side.

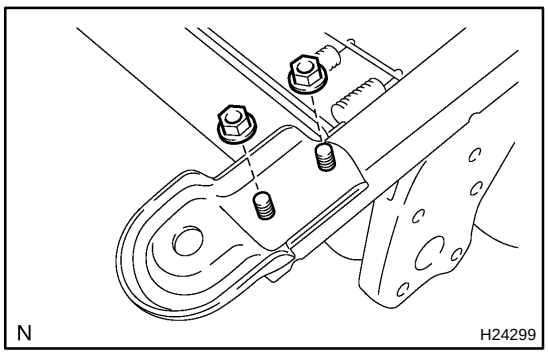

7. INSTALL 2 SEAT TRACK LOWER REAR BRACKETS

(a) Install the seat track lower rear bracket with the 2 nuts.
Torque: 20 N·m (204 kgf·cm, 15 ft·lbf)

(b) Perform the same procedure on the other side.

8. INSTALL SEAT POSITION SENSOR (For Driver Seat) (See page RS−122)

9. INSTALL SEAT POSITION SENSOR (For Front Passenger Seat) (See page RS−149)

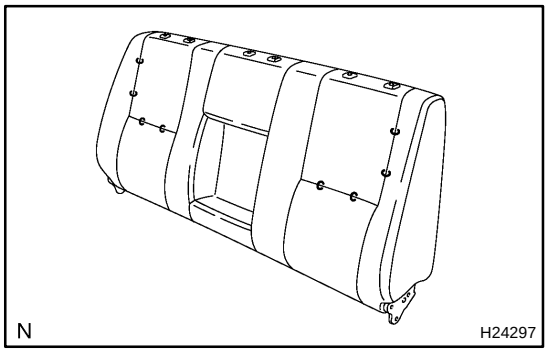

10. INSTALL SEATBACK COVER

Install the seatback cover with the hog rings.

HINT:
When installing the hog rings, take as much care as possible to prevent wrinkles.

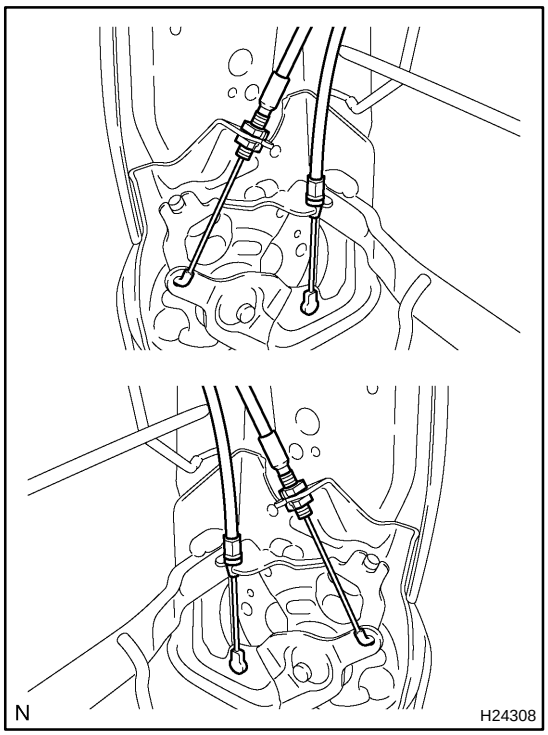

11. INSTALL SEATBACK FRAME

(a) Temporarily install the reclining adjusting cables.

(b) Tighten the adjusting nuts.

HINT:

When tightening the nuts, hold one and tighten the other.

(c) Perform the same procedure on the other side.

(d) Connect the clamp.

(e) Install the seatback frame to the seatback pad and cover.

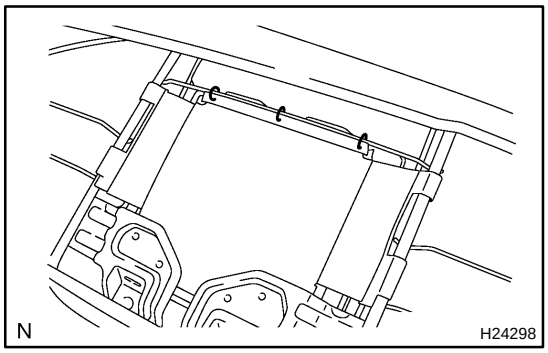

(f) Install the hog rings to the seatback frame.

HINT:

When installing the hog rings, take as much care as possible to prevent wrinkles.

(g) Install the shoulder belt guide with the 2 screws.

(h) Install the 6 headrest supports to the seatback assembly.

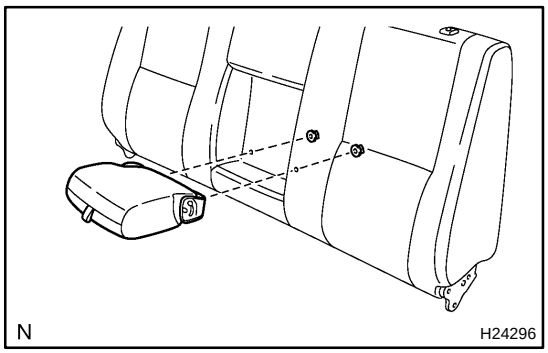

12. INSTALL CENTER ARMREST ASSEMBLY

(a) Install the center armrest assembly to the seatback frame with the 2 nuts.

Torque: 18 N·m (185 kgf·cm, 13 ft·lbf)

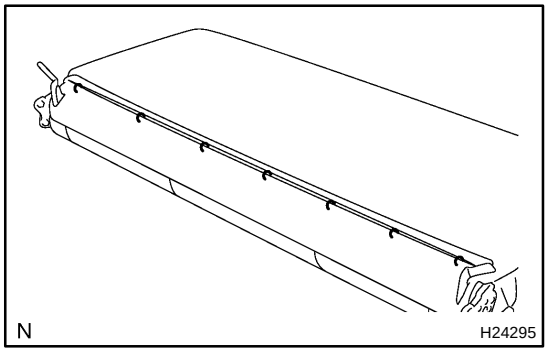

(b) Install the hog rings to the seatback cover.

HINT:

When installing the hog rings, take as much care as possible to prevent wrinkles.

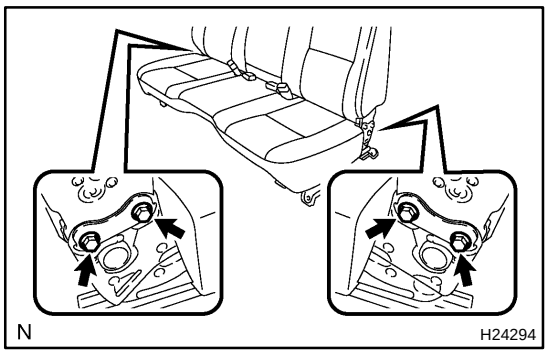

13. INSTALL SEATBACK ASSEMBLY

Install the seatback assembly with the 4 bolts.

Torque: 42 N·m (430 kgf·cm, 32 ft·lbf)

14. INSTALL SEAT HINGE COVER LH

Install the seat hinge cover LH with the 2 screws.

15. INSTALL SEAT HINGE COVER RH

Install the seat hinge cover RH with the 2 screws.

16. INSTALL HEADRESTS

17. INSTALL OCCUPANT CLASSIFICATION ECU

(See page RS−157)

BO4QO−03

REMOVAL

1. REMOVE FRONT SEAT

(a) Remove the 4 bolts.

(b) Disconnect the connectors.

(c) Remove the front seat.

NOTICE:

Be careful not to damage the vehicle body.

FRONT SEAT (Separate Type: Power Adjuster)

BO4S6−03

COMPONENTS

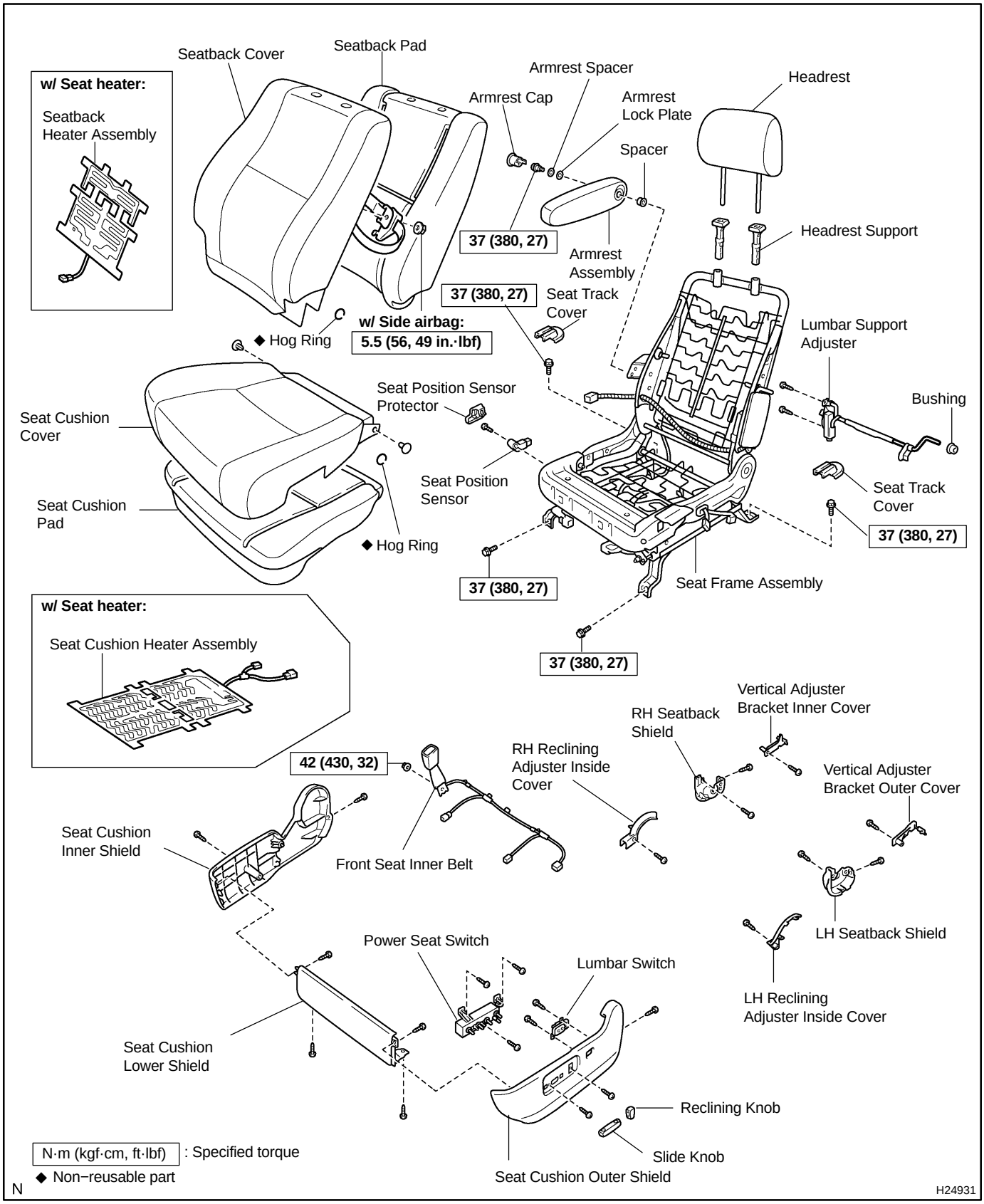

BO4S8−02

DISASSEMBLY

CAUTION:

Wear safety gloves, because the sharp edges and surfaces of the seat frame may cause injury to the hands.

HINT:

- Tape the screwdriver tip before using it to remove the parts.
- For easy removal of the lumbar support adjuster, release the lumbar support through lumbar switch operation.

1. REMOVE HEADREST

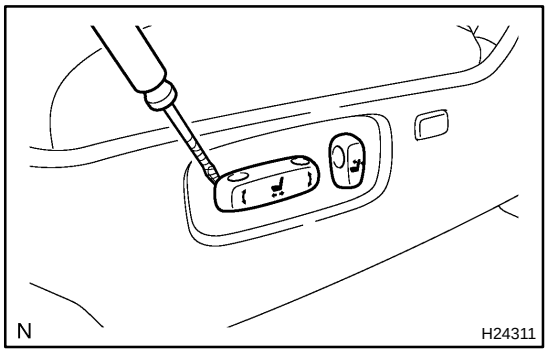

2. REMOVE SLIDE KNOB AND RECLINING KNOB

Using a screwdriver, remove the slide knob and reclining knob.

HINT:

Tape the screwdriver tip before use.

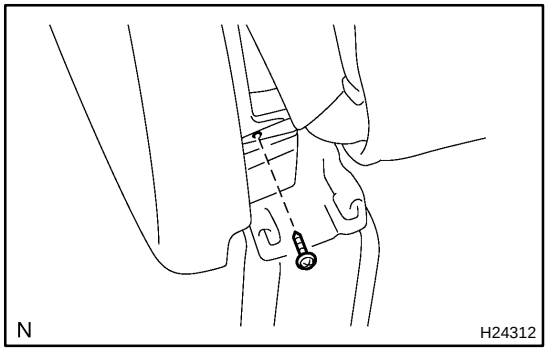

3. REMOVE SEAT CUSHION LOWER SHIELD, SEAT CUSHION OUTER SHIELD AND SEAT CUSHION INNER SHIELD

(a) Remove the screw from the seat cushion outer shield.

(b) Perform the same procedure on the seat cushion inner shield.

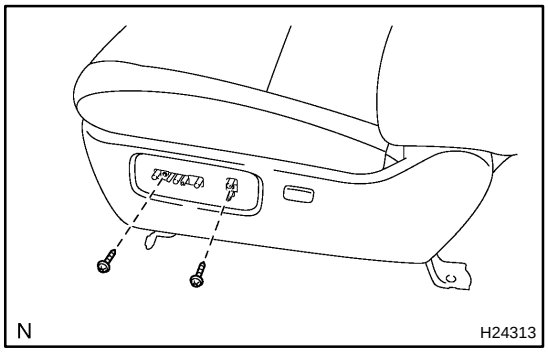

(c) Remove the 2 screws from the seat cushion outer shield.

(d) Remove the screw from the seat cushion inner shield.

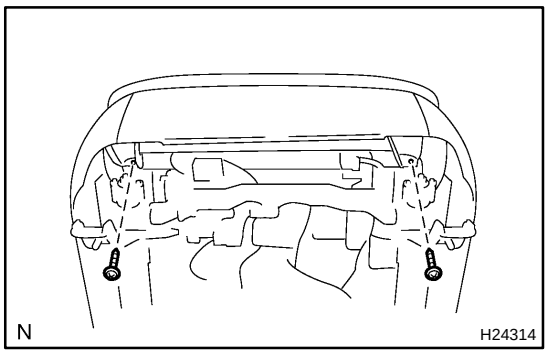

(e) Remove the 2 screws from the seat cushion lower shield.
(f) Disconnect the lumbar switch connector from the seat cushion outer shield, and remove the seat cushion lower shield, outer shield and inner shield.

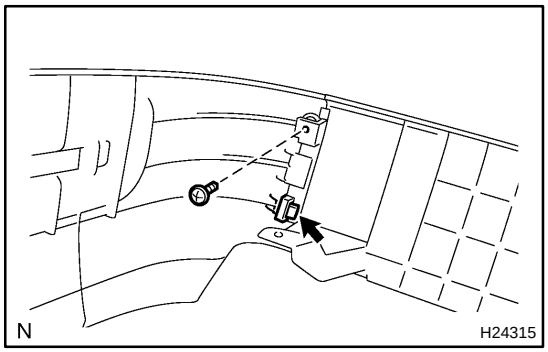

(g) Remove the screw and separate the seat cushion lower shield and seat cushion outer shield.
(h) Perform the same procedure on the other side.

4. REMOVE FRONT SEAT INNER BELT

(a) Disconnect the wire harness clamps and connectors.
(b) Remove the nut and front seat inner belt.

5. REMOVE LUMBAR SWITCH

Remove the 2 screws and lumbar switch from the seat cushion outer shield.

6. REMOVE POWER SEAT SWITCH

Remove the 3 screws and power seat switch.

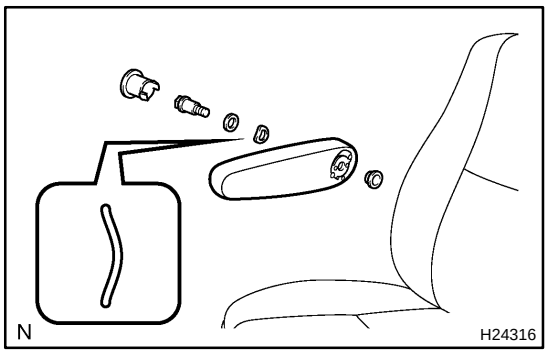

7. REMOVE ARMREST ASSEMBLY

(a) Using a screwdriver, remove the armrest cap.
(b) Remove the bolt, armrest spacer, armrest lock plate and armrest assembly.
(c) Remove the spacer from the armrest assembly.

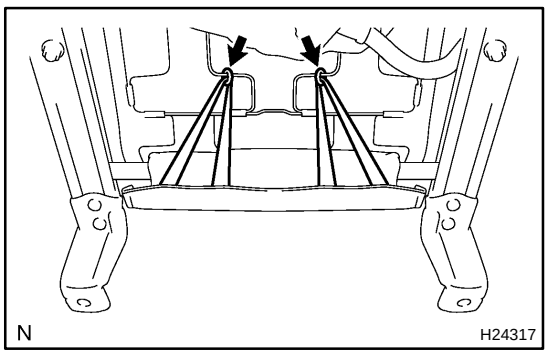

8. REMOVE SEATBACK COVER AND PAD

(a) Remove the hog rings from the seat frame assembly.
(b) Open the fastener.

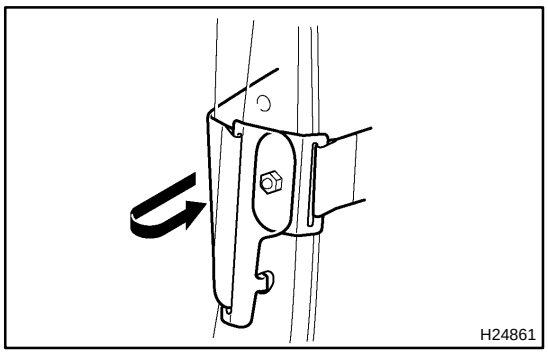

(c) w/ Side airbag:
Remove the nut and disconnect the seatback cover bracket from the seat frame assembly.

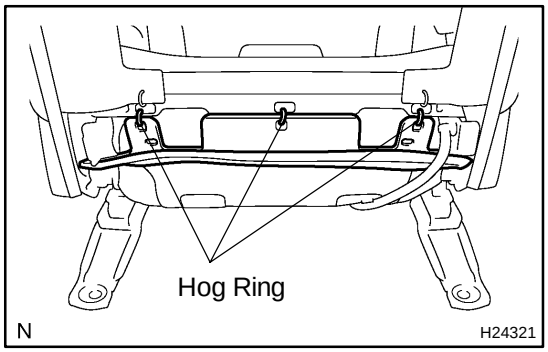

(d) Remove the hog rings from the seat frame assembly.

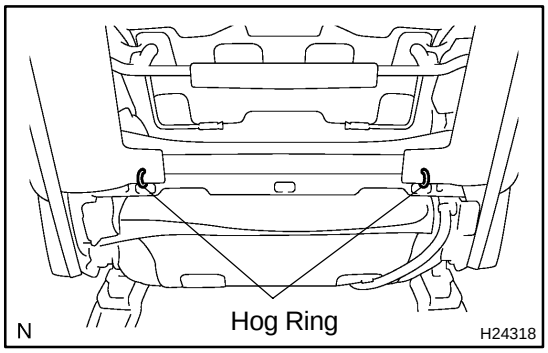

(e) Remove the hog rings from the seat frame assembly.
(f) Remove the seatback cover and pad from the seat frame assembly.

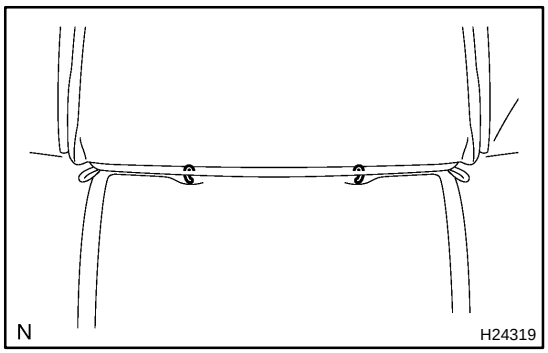

9. REMOVE SEATBACK COVER
(a) Turn up the seatback cover and remove the hog rings.
(b) Remove the 2 headrest supports.
(c) Remove the seatback cover from the seatback pad.

10. w/ Seat heater:
REMOVE SEATBACK HEATER ASSEMBLY

Cut off the tack pins which fasten the seat heater, and then remove the seatback heater assembly from the seatback cover.

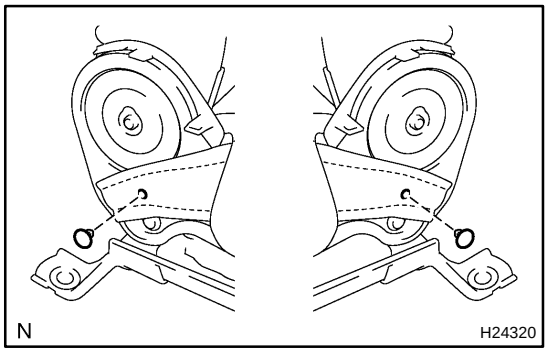

11. REMOVE SEAT CUSHION COVER AND PAD
(a) Disconnect the wire harness clamp.
(b) Remove the 2 clips.

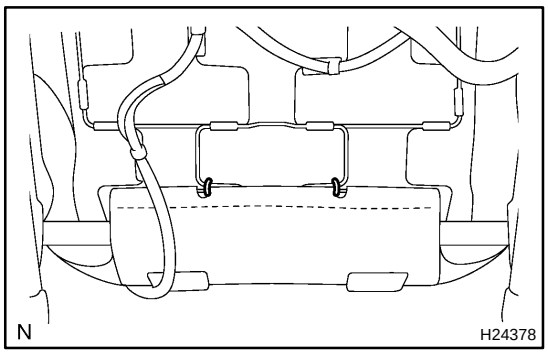

(c) Remove the hog rings from the seat cushion cover.
(d) Unlatch the seat cushion cover hooks, then remove the seat cushion cover and seat cushion pad.

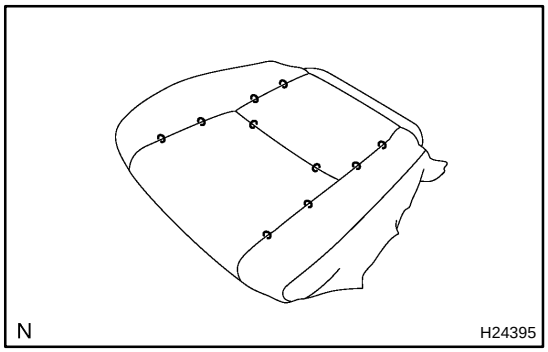

12. REMOVE SEAT CUSHION COVER

Remove the hog rings and seat cushion cover from the seat cushion pad.

13. w/ Seat heater:
REMOVE SEAT CUSHION HEATER ASSEMBLY

Cut off the tack pins which fasten the seat heater, and then remove the seat cushion heater assembly from the seat cushion cover.

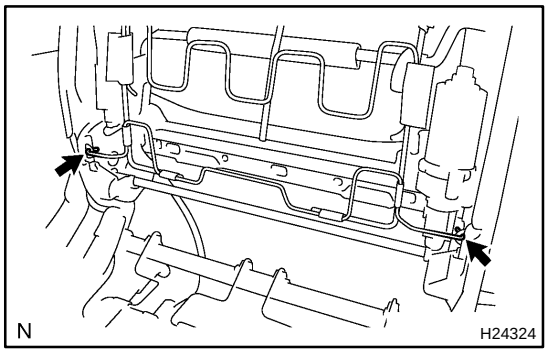

14. REMOVE LUMBAR SUPPORT ADJUSTER

(a) Disconnect the connector.
(b) Disengage the seatback spring edge from the seat frame assembly.

NOTICE:

Be careful when releasing the seatback spring edge, because there is a possibility that the spring may break due to tension by the lumbar support.

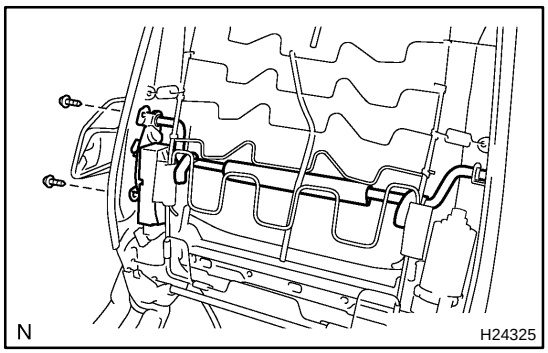

(c) Remove the 2 screws and lumbar support adjuster.
(d) Remove the bushing from the lumbar support adjuster.

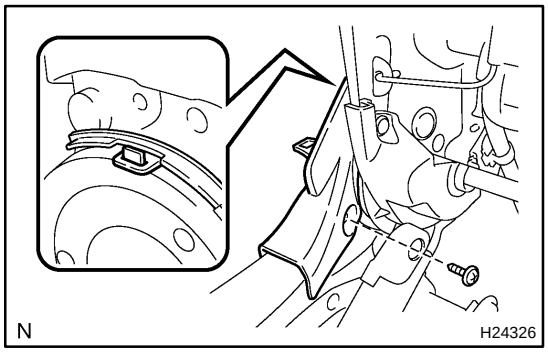

15. REMOVE RH AND LH RECLINING ADJUSTER INSIDE COVERS

(a) Remove the screw and RH reclining adjuster inside cover.
(b) Disconnect the wire harness clamp.
(c) Perform the same procedure on the other side.

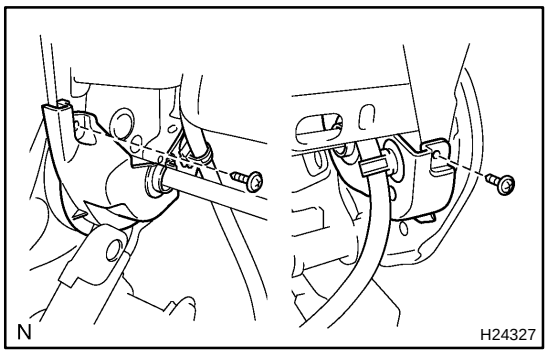

16. REMOVE RH AND LH SEATBACK SHIELDS

(a) Remove the 2 screws and RH seatback shield.

(b) Perform the same procedure on the other side.

17. REMOVE VERTICAL ADJUSTER BRACKET INNER AND OUTER COVERS

(a) Remove the screw and vertical adjuster bracket inner cover.

(b) Perform the same procedure on the other side.

18. REMOVE SEAT POSITION SENSOR

(See page RS−118)

BO4S9−02

INSTALLATION

1. INSTALL FRONT SEAT

(a) Mount the front seat to the vehicle.

NOTICE:

Be careful not to damage the vehicle body.

(b) w/ Side airbag:
Connect the airbag connector.

(c) Connect the connectors.

(d) Slide the front seat to the rearmost position.

(e) Tighten the bolts on the front side temporarily, starting from the bolt on the inner side.

(f) Tighten them completely.
Torque: 37 N·m (380 kgf·cm, 27 ft·lbf)

(g) Slide the front seat to the foremost position.

(h) Tighten the bolts on the rear side temporarily, starting from the bolt on the inner side.

(i) Tighten them completely.
Torque: 37 N·m (380 kgf·cm, 27 ft·lbf)

2. INSTALL SEAT TRACK COVERS

3. CONNECT CABLE TO NEGATIVE BATTERY TERMINAL

BO4SA−02

REASSEMBLY

CAUTION:

Wear safety gloves, because the sharp edges and surfaces of the seat frame may cause injury to the hands.

HINT:

A bolt without a torque specification is shown in the standard bolt chart (see page SS−2).

1. INSTALL SEAT POSITION SENSOR (SEE PAGE RS−122)

2. INSTALL VERTICAL ADJUSTER BRACKET INNER AND OUTER COVERS

(a) Install the vertical adjuster bracket inner cover with the screw.

(b) Perform the same procedure on the other side.

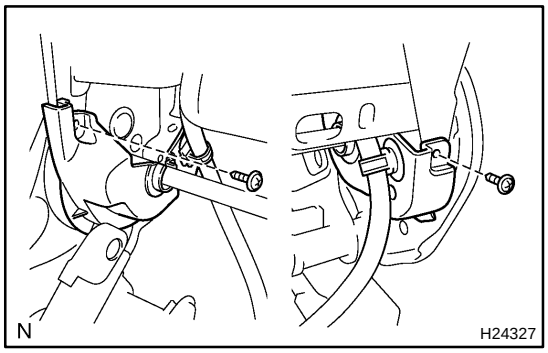

3. INSTALL RH AND LH SEATBACK SHIELDS

(a) Install the RH seatback shield with the 2 screws.

(b) Perform the same procedure on the other side.

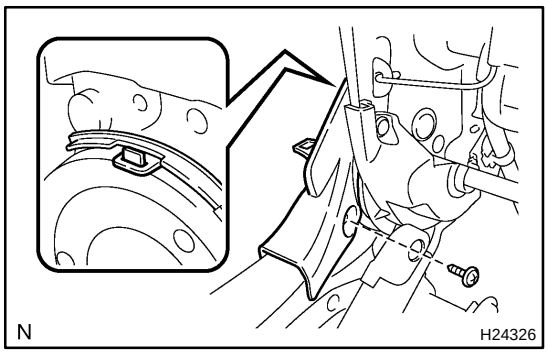

4. INSTALL RH AND LH RECLINING ADJUSTER INSIDE COVERS

(a) Connect the wire harness clamp.

(b) Install the RH reclining adjuster inside cover with the screw.

(c) Perform the same procedure on the other side.

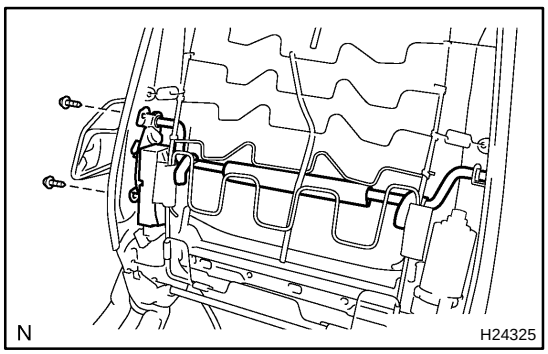

5. INSTALL LUMBAR SUPPORT ADJUSTER

(a) Install a new bushing to the lumbar support adjuster.

(b) Install the lumbar support adjuster with the 2 screws.

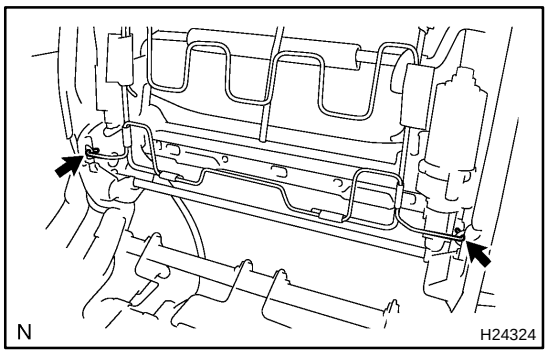

(c) Engage the seatback spring edge with the seat frame assembly.

6. w/ Seat heater:
INSTALL SEAT CUSHION HEATER ASSEMBLY

(a) Set the seat cushion heater assembly with the name stamp side facing the seat cushion cover.

(b) Install the seat cushion heater assembly with the 10 tack pins.

NOTICE:
Do not substitute other metal parts for tack pins.

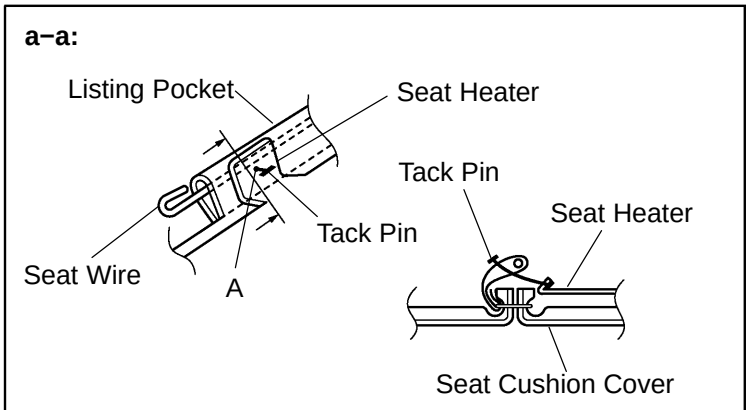

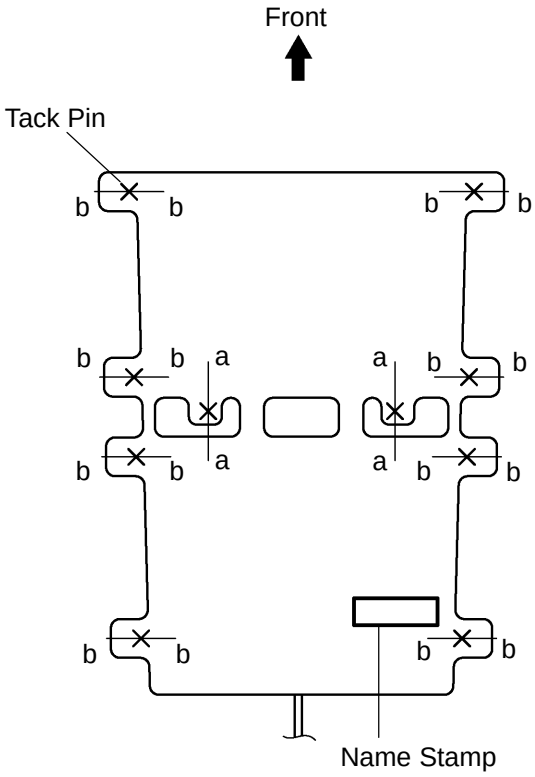

T
H24394

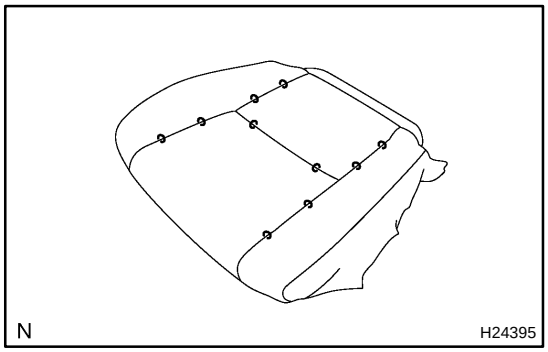

7. INSTALL SEAT CUSHION COVER

Install the seat cushion cover to the seat cushion pad with the hog rings.

HINT:

When installing the hog rings, take as much care as possible to prevent wrinkles.

8. INSTALL SEAT CUSHION COVER AND PAD

(a) Install the seat cushion cover with seat cushion pad, and latch the seat cushion cover hooks.

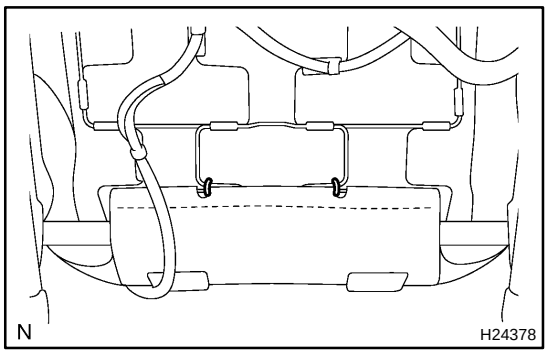

(b) Install the hog rings to the seat cushion cover.

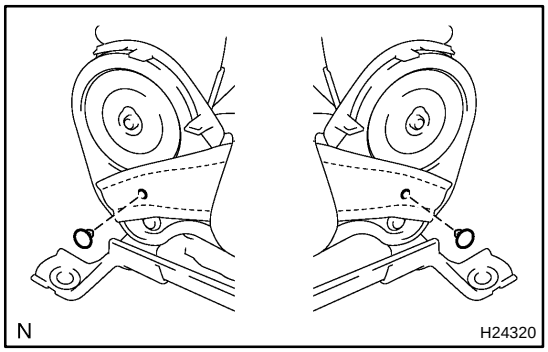

(c) Install the 2 clips.
(d) Connect the wire harness clamp.

9. w/ Seat heater:
INSTALL SEATBACK HEATER ASSEMBLY

(a) Set the seatback heater assembly with the name stamp side facing the seatback cover.
(b) Install the seatback heater assembly with the 11 tack pins.

NOTICE:
Do not substitute other metal parts for tack pins.

a−a:

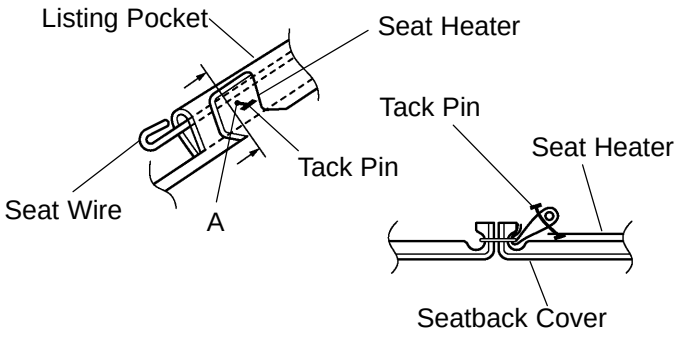

A: Install the tack pins under the wire.

b−b:

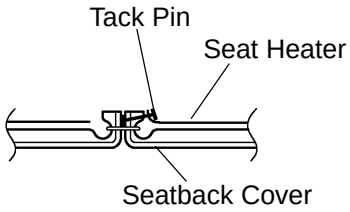

Tack pins should not be beyond the seat.

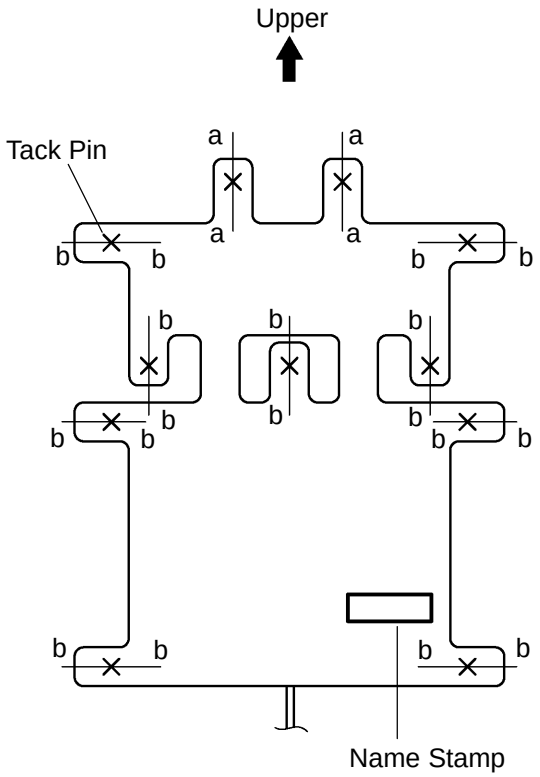

T
H24393

10. INSTALL SEATBACK COVER

(a) Install the seatback cover to the seatback pad.
(b) Install the 2 headrest supports.

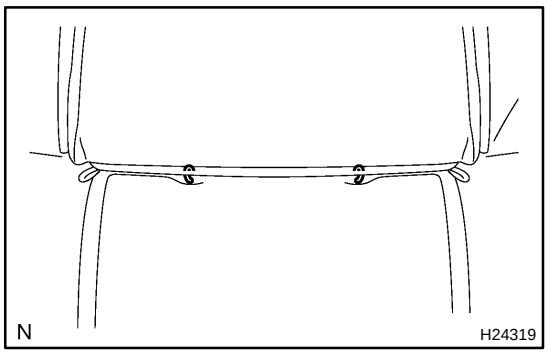

(c) Turn up the seatback cover and install the hog rings.

11. INSTALL SEATBACK COVER AND PAD

(a) Install the seatback cover and pad to the seat frame assembly.

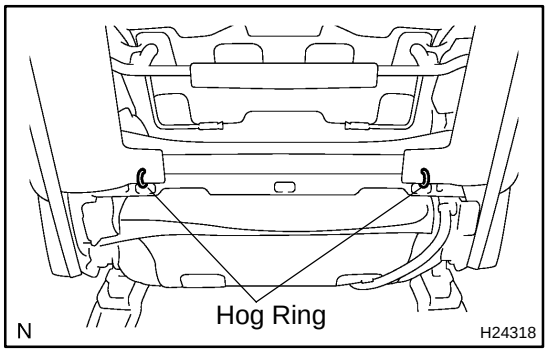

(b) Install the hog rings to the seat frame assembly.

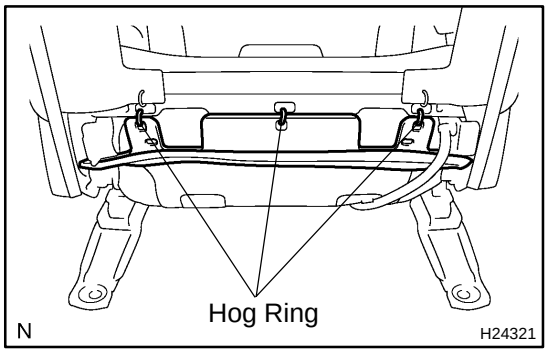

(c) Install the hog rings to the seat frame assembly.

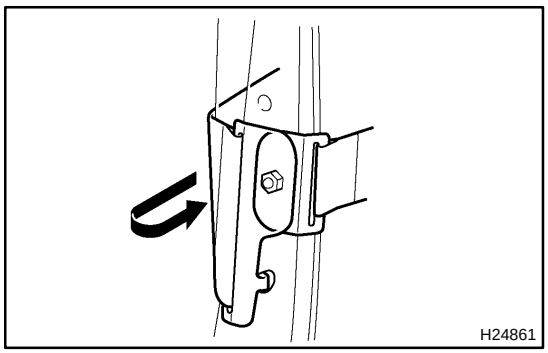

(d) w/ Side airbag:
Connect the seatback cover bracket to the seat frame assembly with the nut.
Torque: 5.5 N·m (56 kgf·cm, 49 in.·lbf)

(e) Close the fastener.

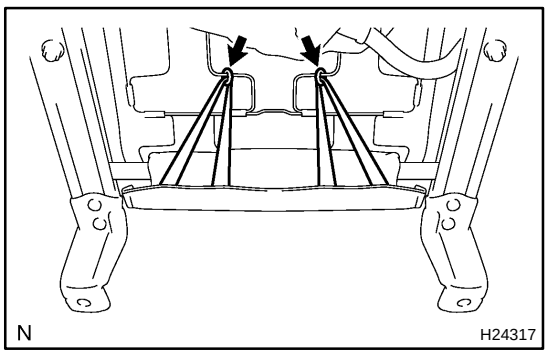

(f) Install the hog rings to the seat frame assembly.

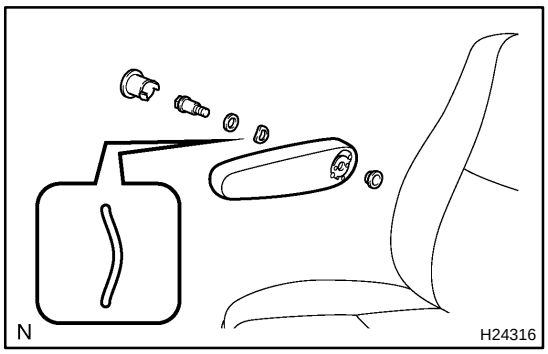

12. INSTALL ARMREST ASSEMBLY

(a) Install the spacer to the armrest assembly.

(b) Install the armrest assembly, armrest lock plate and armrest spacer with the bolt.

Torque: 37 N·m (380 kgf·cm, 27 ft·lbf)

HINT:

Install the armrest lock plate as shown in the illustration.

(c) Install the armrest cap.

13. INSTALL POWER SWITCH

Install the power switch with the 3 screws.

14. INSTALL LUMBAR SWITCH

Install the lumbar switch with the 2 screws to the seat cushion outer shield.

15. INSTALL FRONT SEAT INNER BELT

(a) Install the front seat inner belt with the nut.

Torque: 42 N·m (430 kgf·cm, 32 ft·lbf)

(b) Connect the connectors and wire harness clamps.

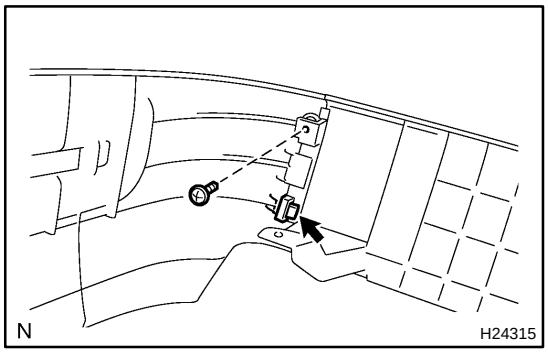

16. INSTALL SEAT CUSHION LOWER SHIELD, SEAT CUSHION OUTER SHIELD AND SEAT CUSHION INNER SHIELD

(a) Assemble the seat cushion lower shield and seat cushion outer shield with the screw.

(b) Perform the same procedure on the other side.

(c) Connect the lumbar switch connector to the seat cushion outer shield, and install the seat cushion lower shield, outer shield and inner shield.

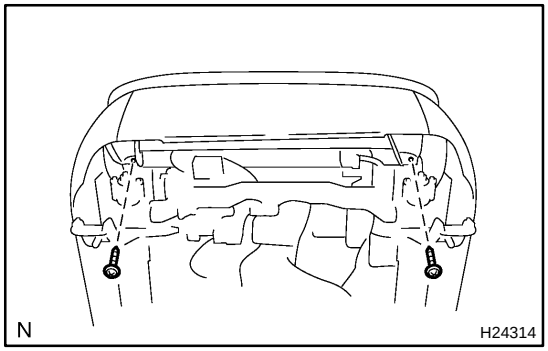

(d) Install the 2 screws to the seat cushion lower shield.

(e) Install the screw to the seat cushion inner shield.

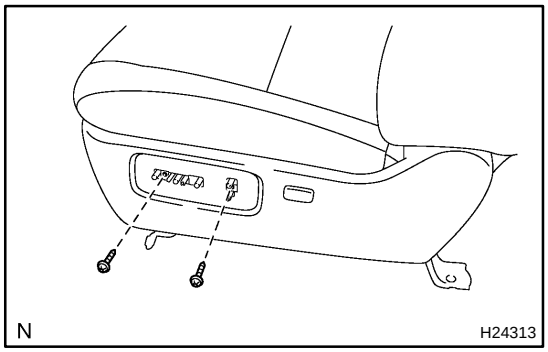

(f) Install the 2 screws to the seat cushion outer shield.

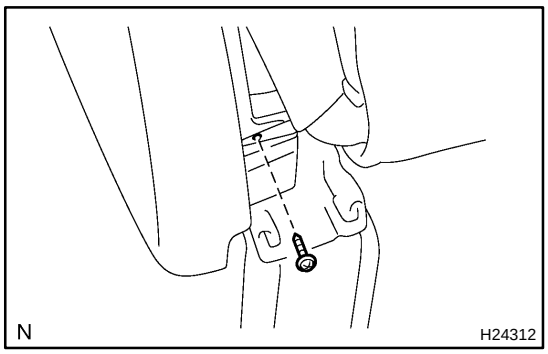

(g) Install the screw to the seat cushion outer shield.
(h) Perform the same procedure on the seat cushion inner shield.

17. INSTALL SLIDE KNOB AND RECLINING KNOB

18. INSTALL HEADREST

BO4S7−02

REMOVAL

CAUTION:

Work must not be started until at least 90 seconds after the ignition switch is turned to the LOCK position and the negative (−) terminal cable is disconnected from the battery.

(The SRS is equipped with a back−up power source. If work is started within 90 seconds from disconnecting the negative (−) terminal cable of the battery, the SRS may deploy.)

1. DISCONNECT CABLE FROM NEGATIVE BATTERY TERMINAL

Wait for 90 seconds after disconnecting the cable to prevent the airbag working.

2. REMOVE SEAT TRACK COVERS

Using a screwdriver, remove the seat track covers.

HINT:

Tape the screwdriver tip before use.

3. REMOVE FRONT SEAT

(a) Remove the 4 bolts.

(b) Disconnect the connectors.

(c) w/ Side airbag:
Disconnect the airbag connector.

(d) Remove the front seat.

NOTICE:

Be careful not to damage the body.

FRONT SEAT (Split Type: Driver's Side)

BO4SB−04

COMPONENTS

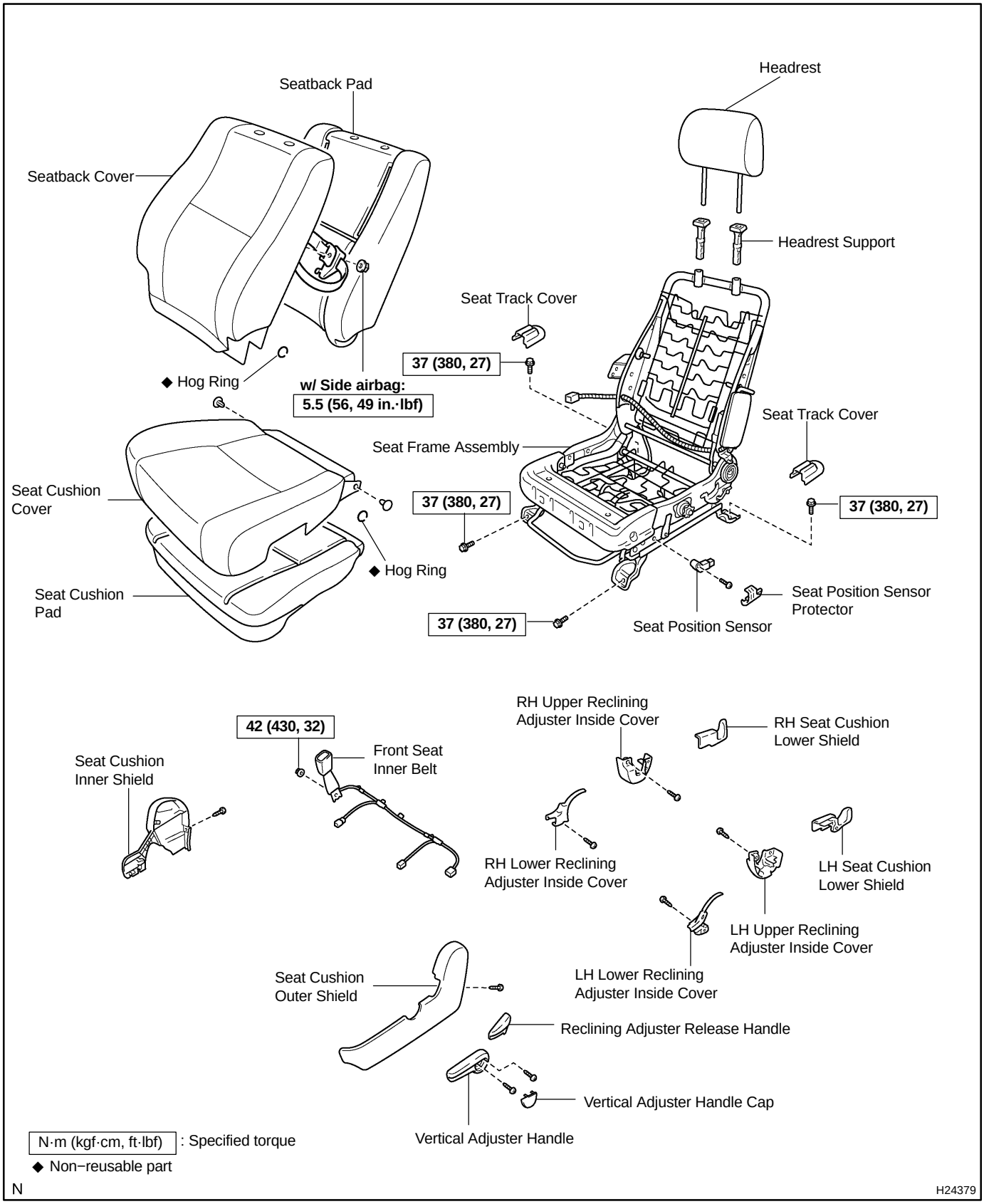

BO4SU−01

DISASSEMBLY

CAUTION:

Wear safety gloves, because the sharp edges and surfaces of the seat frame may cause injury to the hands.

HINT:

Tape the screwdriver tip before using it to remove the parts.

1. REMOVE HEADREST

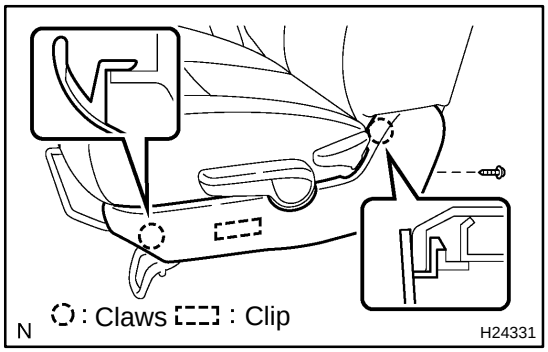

2. REMOVE SEAT CUSHION OUTER SHIELD

(a) Remove the screw from the seat cushion outer shield.

(b) Using a screwdriver, remove the seat cushion outer shield.

HINT:

Tape the screwdriver tip before use.

3. REMOVE RECLINING ADJUSTER RELEASE HANDLE

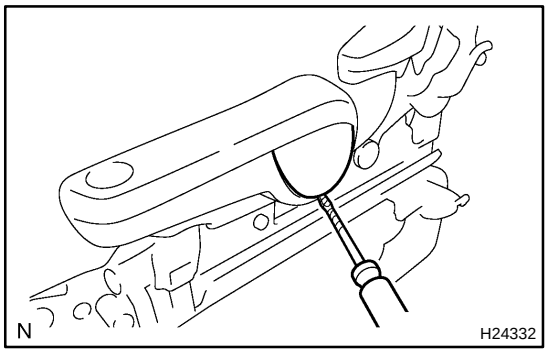

4. REMOVE VERTICAL ADJUSTER HANDLE

(a) Using a screwdriver, remove the vertical adjuster handle cap.

HINT:

Tape the screwdriver tip before use.

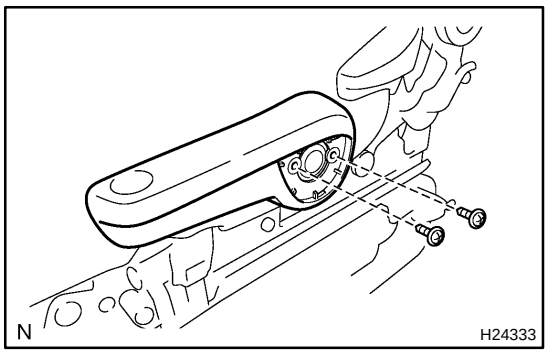

(b) Remove the 2 screws and the vertical adjuster handle.

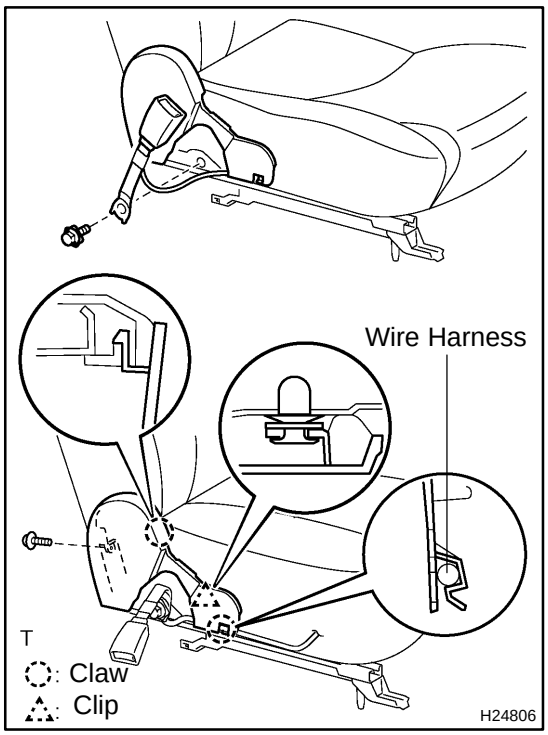

5. REMOVE SEAT CUSHION INNER SHIELD

(a) Remove the bolt and front seat inner belt.

(b) Remove the screw from the seat cushion inner shield.

(c) Disconnect the front seat inner belt wire harness clamp from the seat cushion inner shield.

(d) Using a screwdriver, remove the seat cushion inner shield.

HINT:

Tape the screwdriver tip before use.

(e) Disconnect the connectors and clamps, and remove the front seat inner belt.

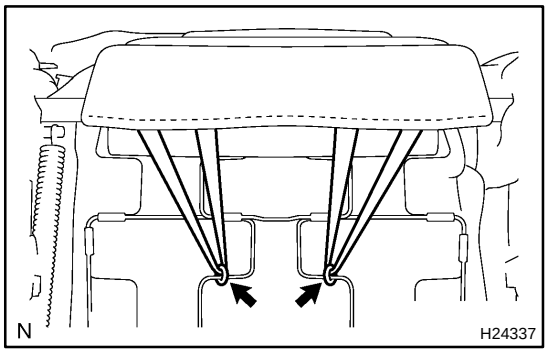

6. REMOVE SEATBACK COVER AND PAD

(a) Remove the hog rings from the seat frame assembly.

(b) Open the fastener.

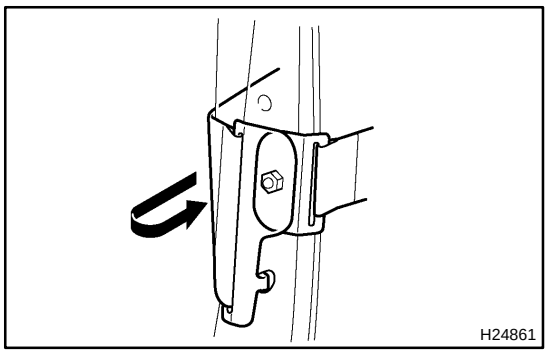

(c) w/ Side airbag:
Remove the nut and disconnect the seatback cover bracket from the seat frame assembly.

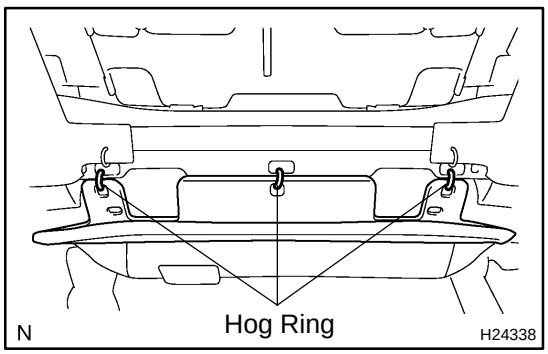

(d) Remove the hog rings shown in the illustration from the seat frame assembly.

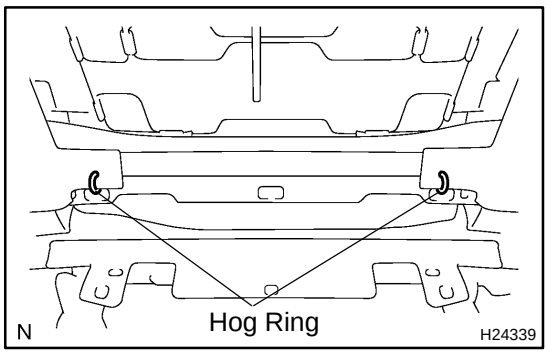

(e) Remove the hog rings shown in the illustration from the seat frame assembly.
(f) Remove the seatback cover and pad from the seat frame assembly.

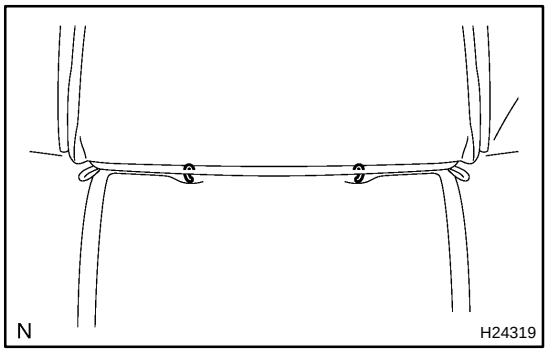

7. REMOVE SEATBACK COVER

(a) Turn up the seatback cover and remove the hog rings.
(b) Remove the 2 headrest supports.
(c) Remove the seatback cover from the seatback pad.

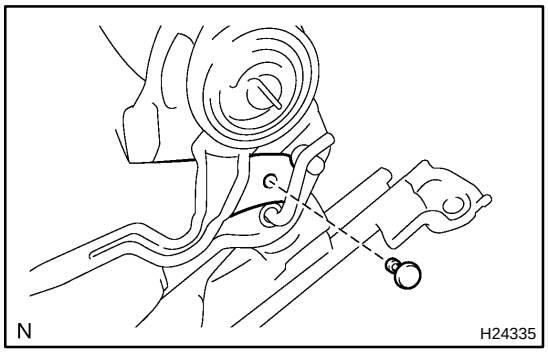

8. REMOVE SEAT CUSHION COVER AND PAD

(a) Remove the clip.
(b) Perform the same procedure on the other side.

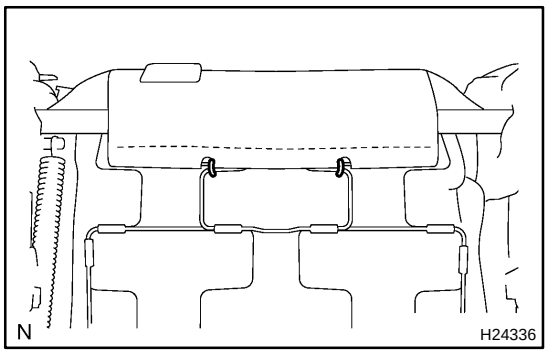

(c) Remove the hog rings from the seat cushion cover.
(d) Unlatch the seat cushion cover hooks, then remove the seat cushion cover with seat cushion pad.

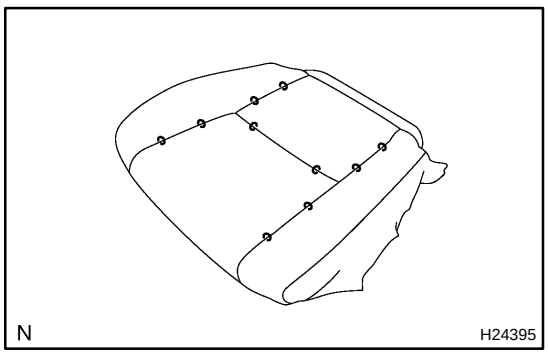

9. REMOVE SEAT CUSHION COVER

Remove the hog rings and seat cushion cover from the seat cushion pad.

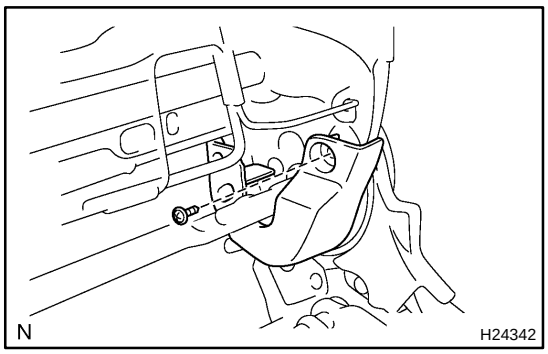

10. REMOVE RH AND LH UPPER RECLINING ADJUSTER INSIDE COVERS

(a) Remove the screw and LH upper reclining adjuster inside cover.

(b) Perform the same procedure on the other side.

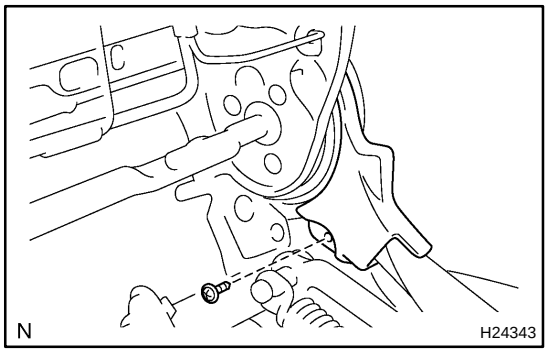

11. REMOVE RH AND LH LOWER RECLINING ADJUSTER INSIDE COVERS

(a) Remove the screw and LH lower reclining adjuster inside cover.

(b) Perform the same procedure on the other side.

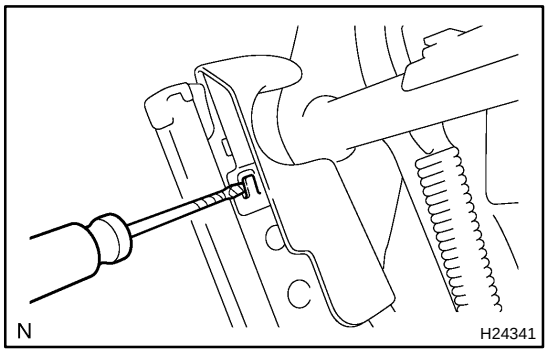

12. REMOVE RH AND LH SEAT CUSHION LOWER SHIELDS

(a) Using a screwdriver, disengage the claw and remove the LH seat cushion lower shield.

HINT:

Tape the screwdriver tip before use.

(b) Perform the same procedure on the other side.

13. REMOVE SEAT POSITION SENSOR

(See page RS−118)

BO4SF−03

INSTALLATION

1. INSTALL FRONT SEAT

(a) Mount the front seat to the vehicle.

NOTICE:

Be careful not to damage the vehicle body.

(b) w/ Side airbag:
Connect the airbag connector.

(c) Connect the connectors.

(d) Slide the front seat to the rearmost position.

(e) Tighten the bolts on the front side temporarily, starting from the bolt on the inner side.

(f) Tighten them completely.
Torque: 37 N·m (380 kgf·cm, 27 ft·lbf)

(g) Slide the front seat to the foremost position.

(h) Tighten the bolts on the rear side temporarily, starting from the bolt on the inner side.

(i) Tighten them completely.
Torque: 37 N·m (380 kgf·cm, 27 ft·lbf)

2. INSTALL SEAT TRACK COVERS

3. CONNECT CABLE TO NEGATIVE BATTERY TERMINAL

BO4SV−01

REASSEMBLY

CAUTION:

Wear safety gloves, because the sharp edges and surfaces of the seat frame may cause injury to the hands.

HINT:

A bolt without a torque specification is shown in the standard bolt chart (see page SS−2).

1. INSTALL SEAT POSITION SENSOR (SEE PAGE RS−122)

2. INSTALL RH AND LH SEAT CUSHION LOWER SHIELDS

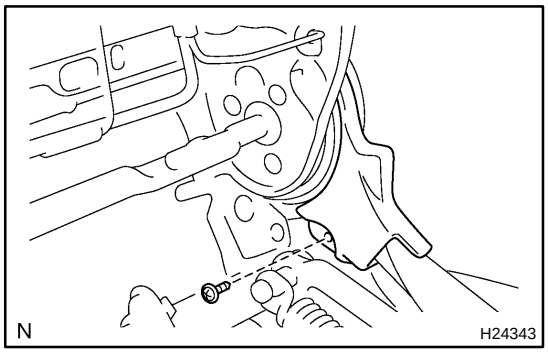

3. INSTALL RH AND LH LOWER RECLINING ADJUSTER INSIDE COVERS

(a) Install the LH lower reclining adjuster inside cover with the screw.

(b) Perform the same procedure on the other side.

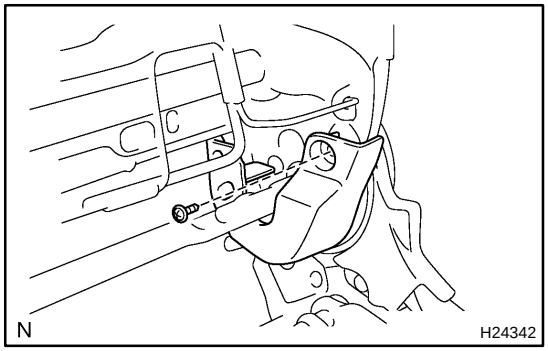

4. INSTALL RH AND LH UPPER RECLINING ADJUSTER INSIDE COVERS

(a) Install the LH upper reclining adjuster inside cover with the screw.

(b) Perform the same procedure on the other side.

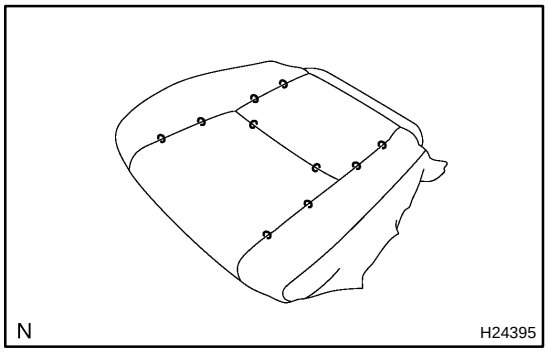

5. INSTALL SEAT CUSHION COVER

Install the seat cushion cover to the seat cushion pad with the hog rings.

HINT:

When installing the hog rings, take as much care as possible to prevent wrinkles.

6. INSTALL SEAT CUSHION COVER AND PAD

(a) Install the seat cushion cover with seat cushion pad, and latch the seat cushion cover hooks.

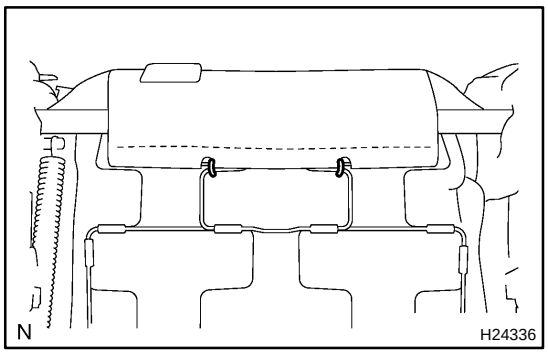

(b) Install the hog rings to the seat cushion cover.

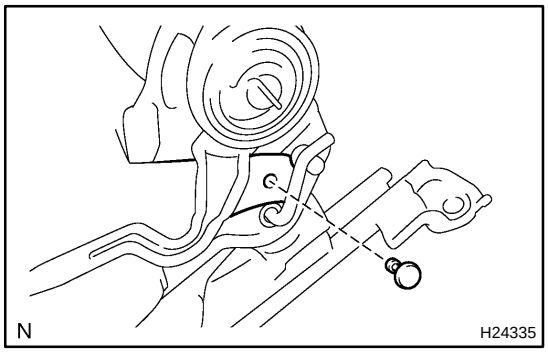

(c) Install the clip.
(d) Perform the same procedure on the other side.

7. INSTALL SEATBACK COVER

(a) Install the seatback cover to the seatback pad.
(b) Install the 2 headrest supports.

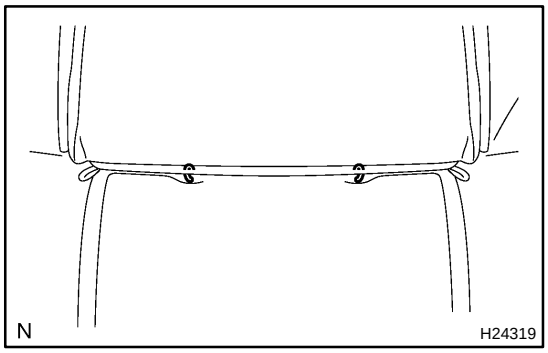

(c) Turn up the seatback cover and install the hog rings.

8. INSTALL SEATBACK COVER AND PAD

(a) Install the seatback cover and pad to the seat frame assembly.

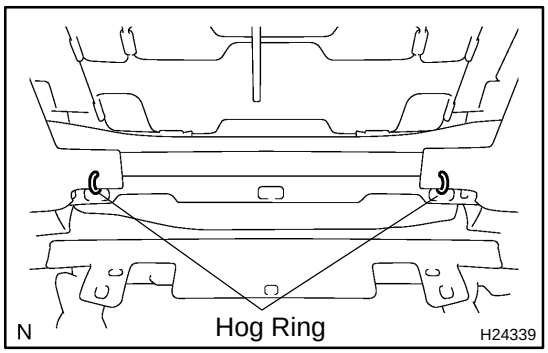

(b) Install the hog rings to the seat frame assembly.

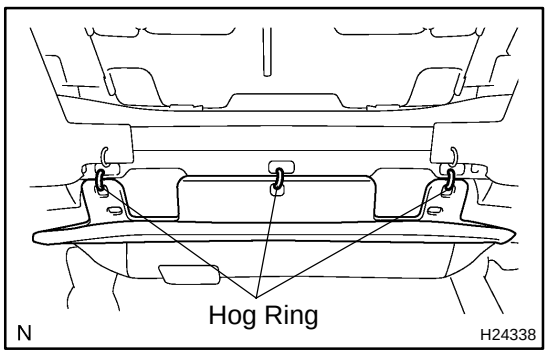

(c) Install the hog rings to the seat frame assembly.

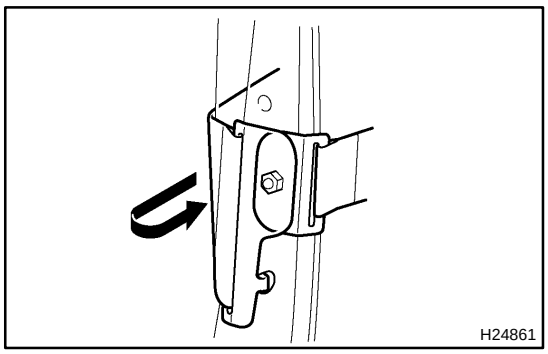

(d) w/ Side airbag:
Connect the seatback cover bracket to the seat frame assembly with the nut.
Torque: 5.5 N·m (56 kgf·cm, 49 in.·lbf)

(e) Close the fastener.

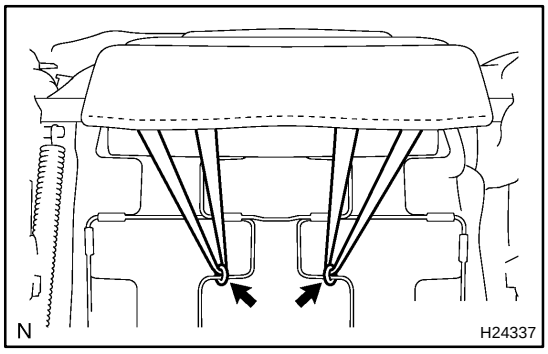

(f) Install the hog rings to the seat frame assembly.

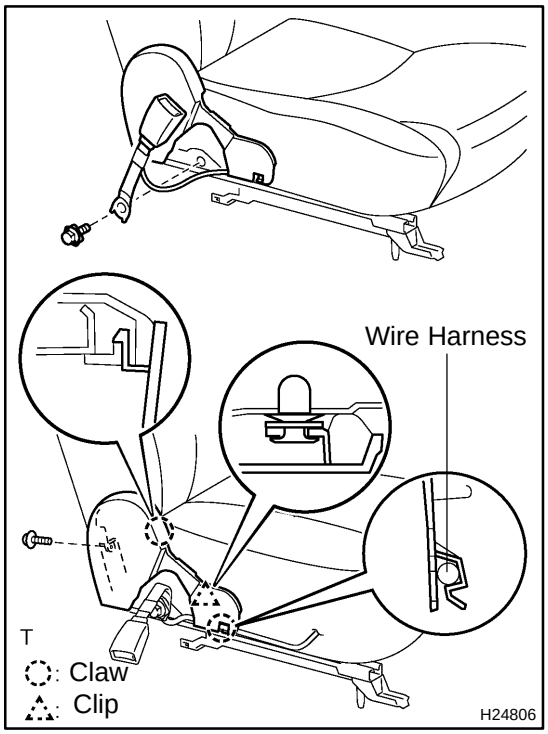

9. INSTALL SEAT CUSHION INNER SHIELD

(a) Connect the front seat inner belt connectors and clamps.

(b) Install the seat cushion inner shield.

(c) Connect the front seat inner belt wire harness clamp to the seat cushion inner shield.

(d) Install the screw to the seat cushion inner shield.

(e) Install the front seat inner belt with the bolt.
Torque: 42 N·m (430 kgf·cm, 32 ft·lbf)

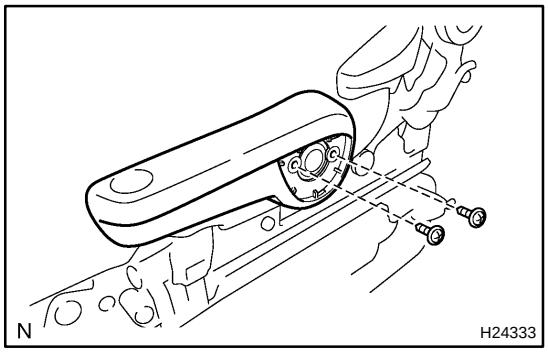

10. INSTALL VERTICAL ADJUSTER HANDLE

(a) Install the vertical adjuster handle with the 2 screws.

(b) Install the vertical adjuster handle cap.

11. INSTALL RECLINING ADJUSTER RELEASE HANDLE

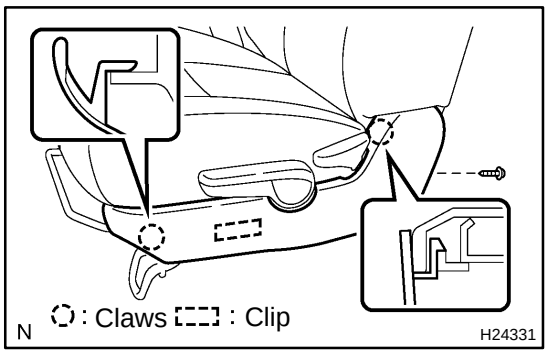

12. INSTALL SEAT CUSHION OUTER SHIELD

Install the seat cushion outer shield with the screw.

13. INSTALL HEADREST

BO4SC−02

REMOVAL

CAUTION:

Work must not be started until at least 90 seconds after the ignition switch is turned to the LOCK position and the negative (−) terminal cable is disconnected from the battery.

(The SRS is equipped with a back−up power source. If work is started within 90 seconds from disconnecting the negative (−) terminal cable of the battery, the SRS may deploy.)

1. DISCONNECT CABLE FROM NEGATIVE BATTERY TERMINAL

Wait for 90 seconds after disconnecting the cable to prevent the airbag working.

2. REMOVE SEAT TRACK COVERS

Using a screwdriver, remove the seat track covers.

HINT:

Tape the screwdriver tip before use.

3. REMOVE FRONT SEAT

(a) Remove the 4 bolts.

(b) Disconnect the connectors.

(c) w/ Side airbag:
Disconnect the airbag connector.

(d) Remove the front seat.

NOTICE:

Be careful not to damage the vehicle body.

FRONT SEAT (Split Type: Passenger's Side)

BO4SW−02

COMPONENTS

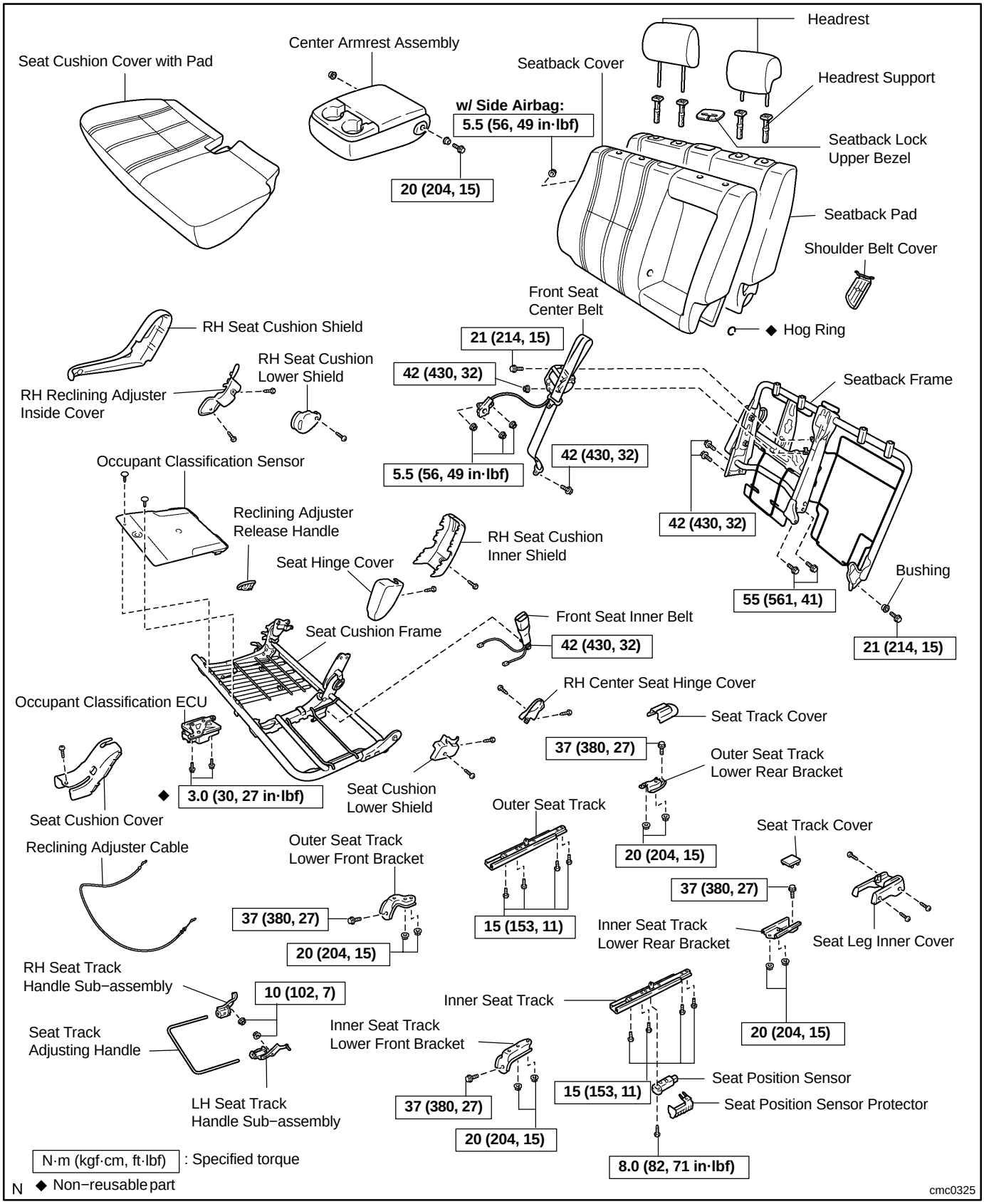

BO4SY−02

DISASSEMBLY

CAUTION:

Wear safety gloves, because the sharp edges and surfaces of the seat frame may cause injury to the hands.

HINT:

Tape the screwdriver tip before using it to remove parts.

1. REMOVE OCCUPANT CLASSIFICATION ECU
(See page RS−154)

2. REMOVE SEAT POSITION SENSOR PROTECTOR
(See page RS−145)

3. REMOVE SEAT POSITION SENSOR
(See page RS−145)

4. REMOVE SEAT LEG INNER COVER

Remove the 3 screws and seat leg inner cover.

5. REMOVE HEADRESTS

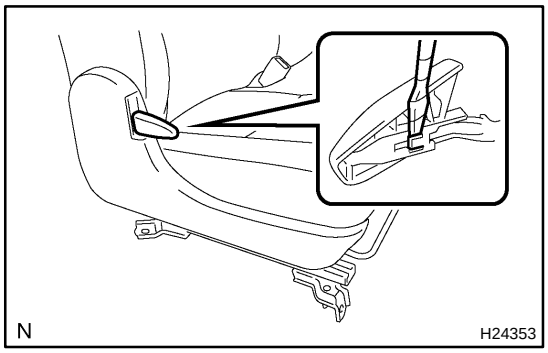

6. REMOVE RECLINING ADJUSTER RELEASE HANDLE

Using a screwdriver, remove the reclining adjuster release handle.

HINT:

Tape the screwdriver tip before use.

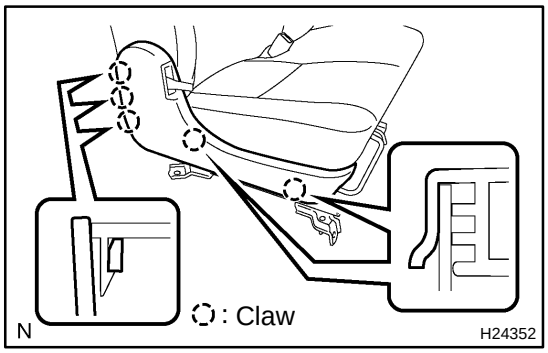

7. REMOVE RH SEAT CUSHION SHIELD

Disengage the claws and remove the RH seat cushion shield.

8. REMOVE SEAT CUSHION LOWER SHIELD

Remove the 2 screws and seat cushion lower shield.

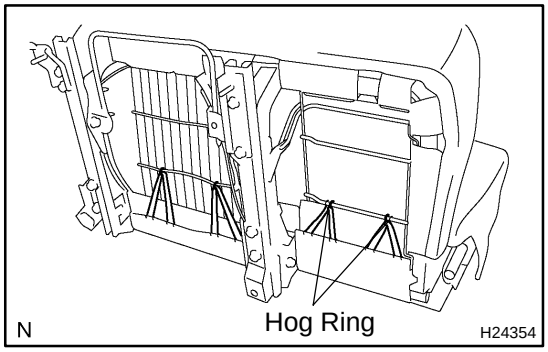

9. REMOVE SEATBACK ASSEMBLY

(a) Remove the hog rings from the seatback cover belt.

(b) Remove the seatback cover belt from the hook.

(c) Remove the hog rings from the rearmost portion of the seat cushion frame.

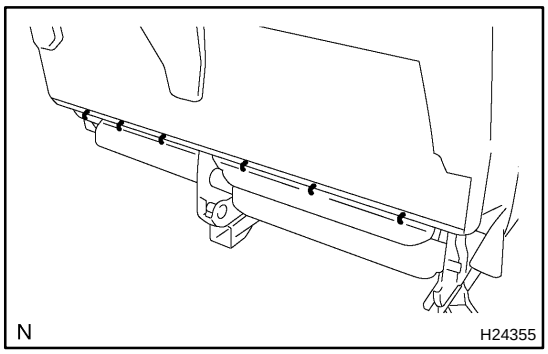

(d) Remove the hog rings from the seatback cover.
(e) Open the fastener.
(f) Remove the bolt and center armrest assembly.
(g) Remove the 2 bushings.

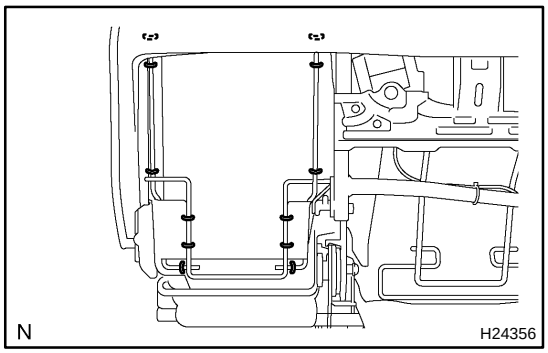

(h) Remove the hog rings from the seatback cover.

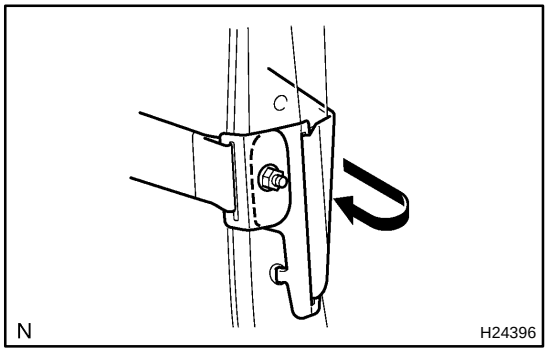

(i) w/ Side airbag:
Remove the nut and disconnect the seatback cover bracket from the seatback frame.

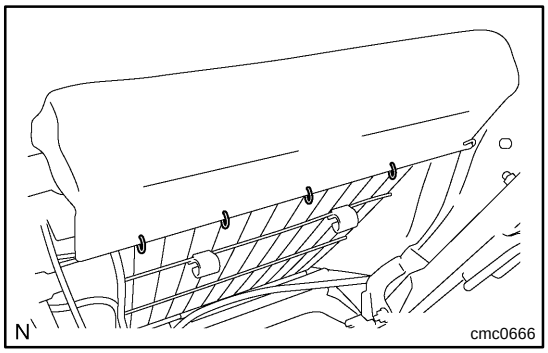

(j) Remove the hog rings from the seat cushion cover.

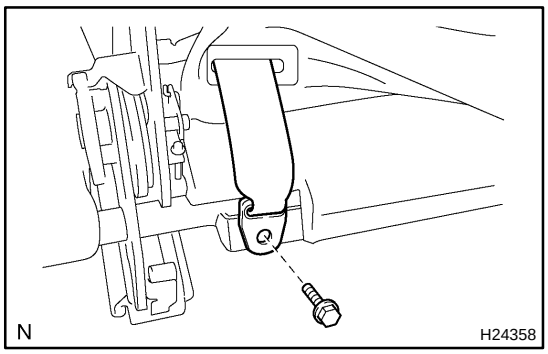

(k) Remove the bolt and disconnect the front seat center belt from the seat cushion assembly.
(l) Remove the screw and RH seat cushion lower shield.
(m) Remove the 2 screws and RH reclining adjuster inside cover.

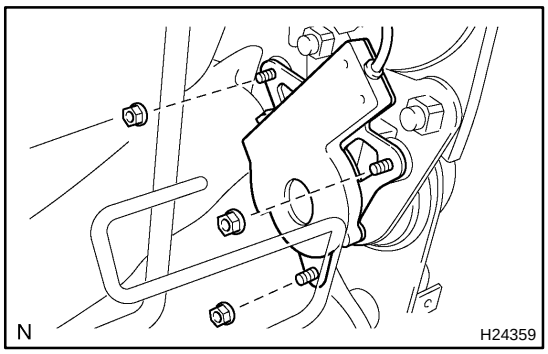

(n) Remove the 3 nuts and disconnect the front seat center belt.
(o) Remove the 3 bolts.
(p) Using a torx® socket wrench, remove the 2 torx® screws and seatback assembly from the seat cushion assembly.
(q) Remove the bushing from the seatback frame

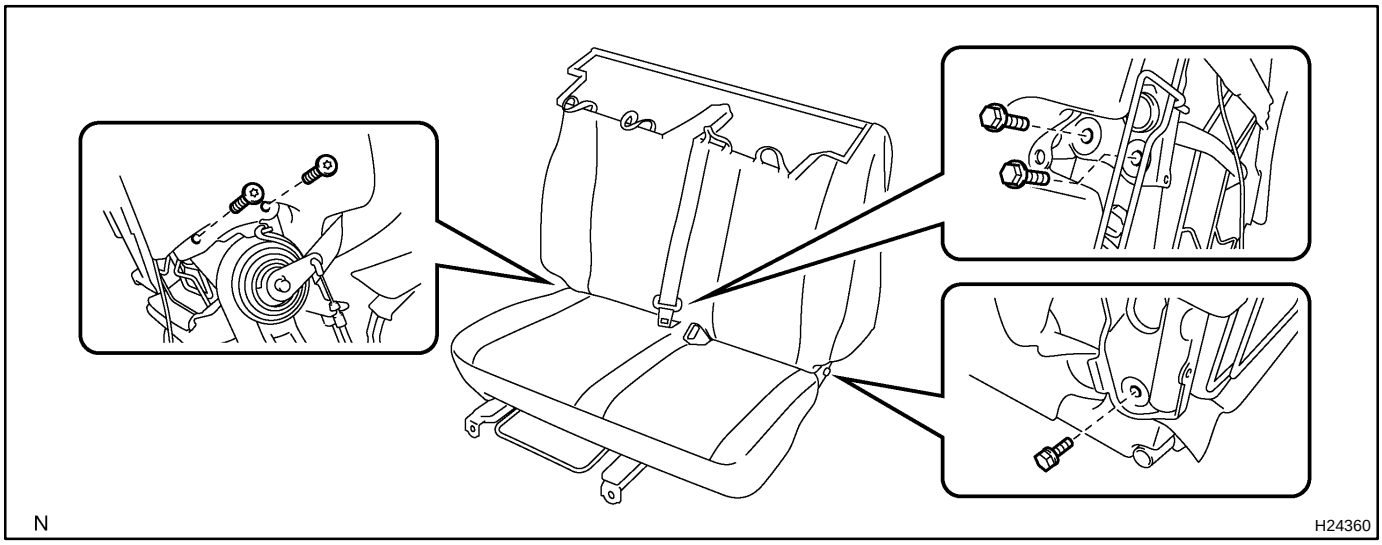

10. REMOVE SEATBACK FRAME

(a) Remove the 4 headrest supports from the seatback assembly.
(b) Remove the seatback lock upper bezel.
(c) Remove the seatback frame from the seatback pad.

11. REMOVE SEATBACK COVER

Remove the hog rings and seatback cover from the seatback pad.

12. REMOVE SHOULDER BELT COVER

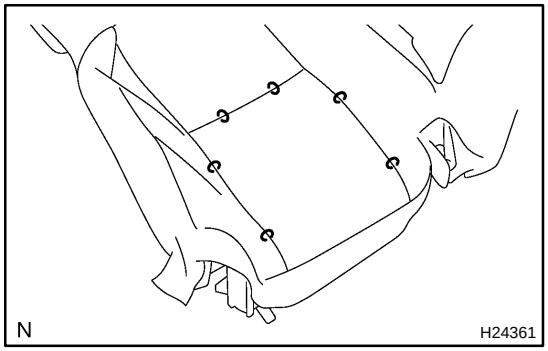

13. REMOVE FRONT SEAT CENTER BELT

(a) Disconnect the clamps.
(b) Remove the bolt, nut and front seat center belt.

14. REMOVE RH CENTER SEAT HINGE COVER

Remove the 2 screws and RH center seat hinge cover.

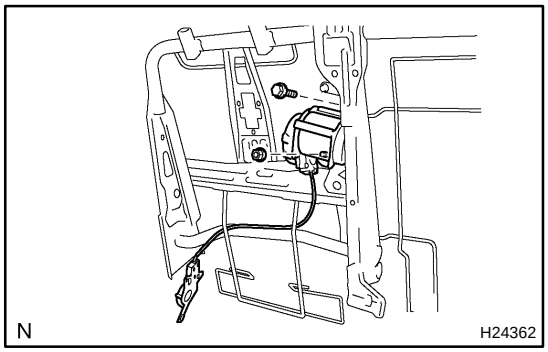

15. REMOVE RH SEAT CUSHION INNER SHIELD AND SEAT CUSHION COVER

Remove the 2 screws, RH seat cushion inner shield and seat cushion cover.

16. REMOVE SEAT HINGE COVER

Remove the screw and seat hinge cover.

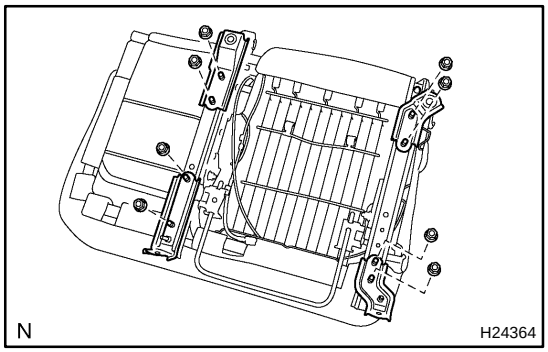

17. REMOVE OUTER SEAT TRACK LOWER FRONT AND REAR BRACKET

(a) Remove the 2 nuts and outer seat track lower front bracket.

(b) Remove the 2 nuts and outer seat track lower rear bracket.

18. REMOVE INNER SEAT TRACK LOWER FRONT AND REAR BRACKET

(a) Remove the 2 nuts and inner seat track lower front bracket.

(b) Remove the 2 nuts and inner seat track lower rear bracket.

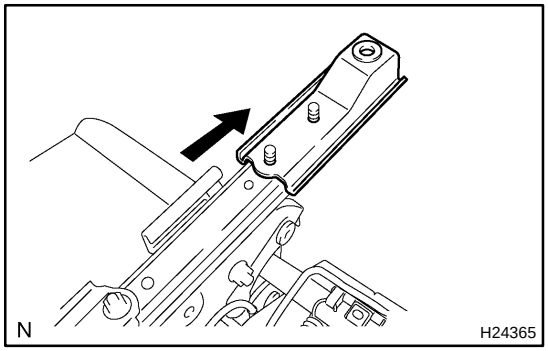

HINT:

When removing the inner seat track lower rear bracket, slide the inner seat track as shown in the illustration.

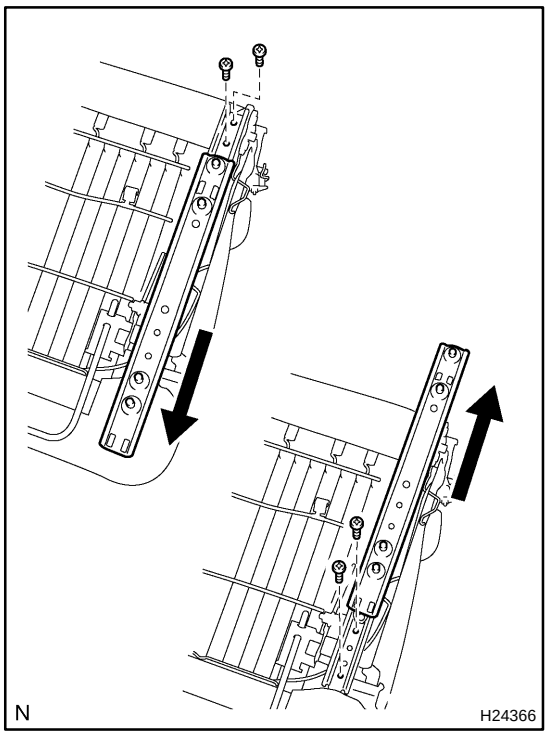

19. REMOVE OUTER SEAT TRACK

HINT:

Slide the outer seat track until the torx® screws on the front and rear sides can be seen.

Remove the 4 torx® screws and outer seat track.

20. REMOVE INNER SEAT TRACK

Perform the same procedure on the inner seat track.

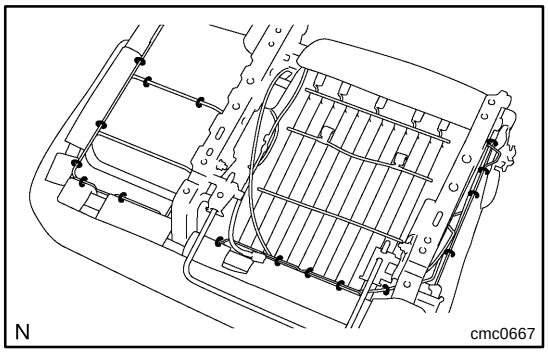

21. REMOVE SEAT CUSHION FRAME

Remove the hog rings and seat cushion frame from the seat cushion pad.

HINT:

If the seat cushion cover needs to be replaced, replace it with the front seat cushion assembly (service kit) (see page RS−160).

22. REMOVE OCCUPANT CLASSIFICATION SENSOR (See page RS−160)

23. REMOVE FRONT SEAT INNER BELT

(a) Disconnect the wire harness clamps.

(b) Remove the bolt and front seat inner belt from the seat cushion frame.

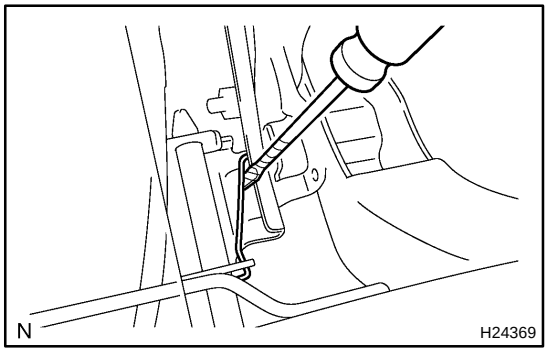

24. REMOVE SEAT TRACK ADJUSTING HANDLE

(a) Using a screwdriver, disengage the seat track cover spring.

HINT:

Tape the screwdriver tip before use.

(b) Perform the same procedure on the other side.

(c) Remove the seat track adjusting handle.

25. REMOVE RH AND LH SEAT TRACK HANDLE SUB−ASSEMBLY

(a) Remove the nut and RH seat track handle sub−assembly.

(b) Perform the same procedure on the other side.

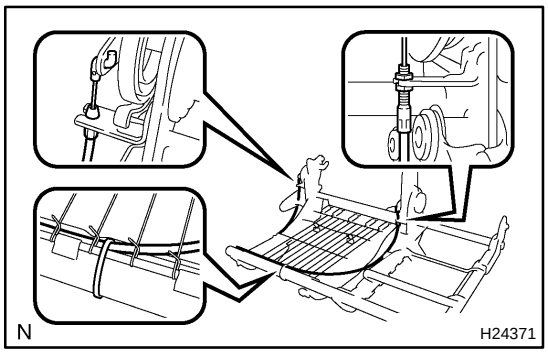

26. REMOVE RECLINING ADJUSTING CABLE

(a) Disconnect the clamp.

(b) Loosen the adjusting nuts.

HINT:

When loosening the nuts, hold one and loosen the other.

(c) Remove the reclining adjusting cable.

BO4T0−01

INSTALLATION

1. INSTALL FRONT SEAT

(a) Mount the front seat to the vehicle.

NOTICE:

Be careful not to damage the vehicle body.

(b) w/ Side airbag:
Connect the airbag connector.

(c) Connect the connectors.

(d) Slide the front seat to the rearmost position.

(e) Tighten the bolts on the front side temporarily, starting from the bolt on the inner side.

(f) Tighten them completely.
Torque: 37 N·m (380 kgf·cm, 27 ft·lbf)

(g) Slide the front seat to the foremost position.

(h) Tighten the bolts on the rear side temporarily, starting from the bolt on the inner side.

(i) Tighten them completely.
Torque: 37 N·m (380 kgf·cm, 27 ft·lbf)

2. INSTALL SEAT TRACK COVERS

3. CONNECT CABLE TO NEGATIVE BATTERY TERMINAL

BO4SZ−02

REASSEMBLY

CAUTION:

Wear safety gloves, because the sharp edges and surfaces of the seat frame may cause injury to the hands.

HINT:

A bolt without a torque specification is shown in the standard bolt chart (see page SS−2).

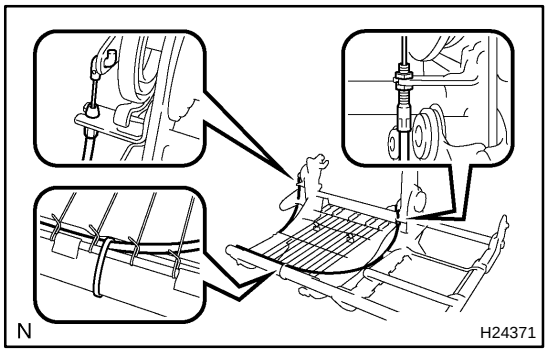

1. INSTALL RECLINING ADJUSTING CABLE

(a) Temporarily install the reclining adjusting cable.

(b) Tighten the adjusting nuts.

HINT:

When tighten the nuts, hold one and tighten the other.

(c) Connect the clamp.

2. INSTALL RH AND LH SEAT TRACK HANDLE SUB−ASSEMBLY

(a) Install the RH seat track handle sub−assembly with the nut.

Torque: 10 N·m (102 kgf·cm, 7 ft·lbf)

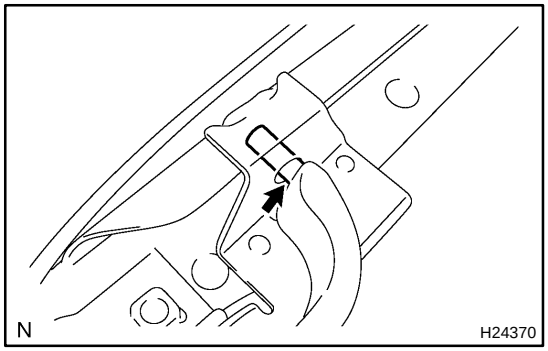

HINT:

Apply MP grease to the sliding part of the seat track handle sub−assembly.

(b) Perform the same procedure on the other side.

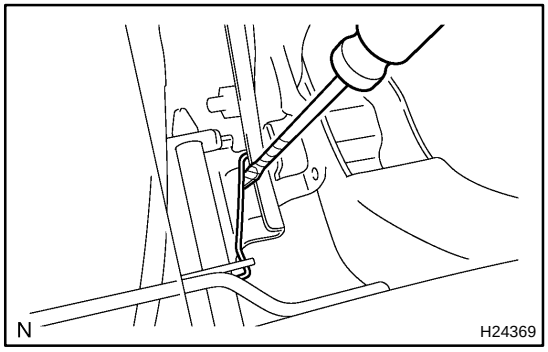

3. INSTALL SEAT TRACK ADJUSTING HANDLE

(a) Install the seat track adjusting handle.

(b) Using a screwdriver, engage the seat track cover spring.

HINT:

Tape the screwdriver tip before use.

(c) Perform the same procedure on the other side.

4. INSTALL FRONT SEAT INNER BELT

(a) Install the front seat inner belt to the seat cushion frame with the bolt.

Torque: 42 N·m (430 kgf·cm, 32 ft·lbf)

(b) Connect the wire harness clamps.

5. INSTALL OCCUPANT CLASSIFICATION SENSOR

(See page RS−162)

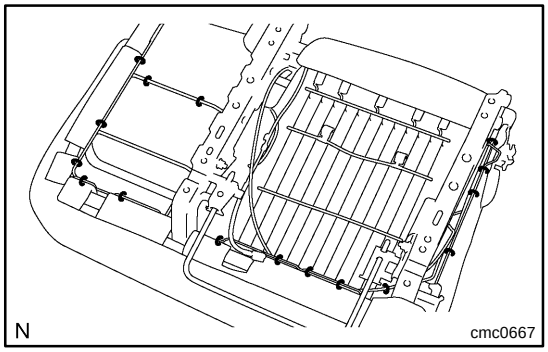

6. INSTALL SEAT CUSHION FRAME

(a) Install the seat cushion frame to the seat cushion pad.

(b) Install the hog rings.

HINT:

When installing the hog rings, take as much care as possible to prevent wrinkles.

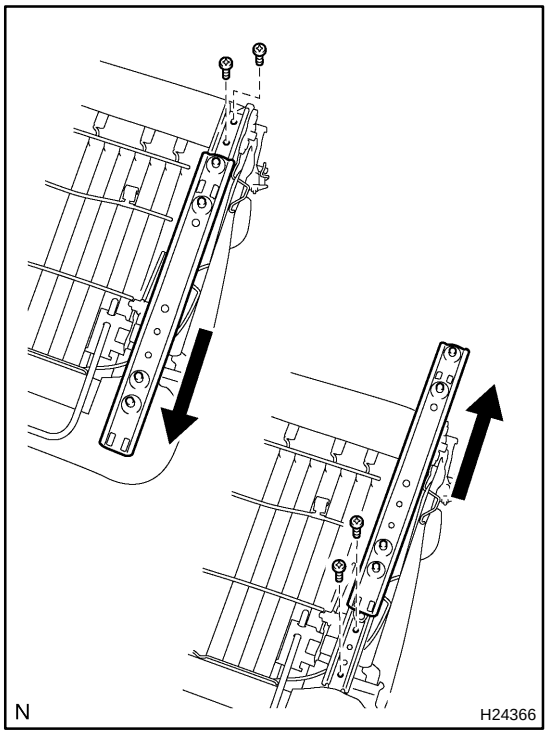

7. INSTALL OUTER SEAT TRACK

HINT:

Slide the outer seat track until the torx® screws on the front and rear sides can be seen.

Using a torx® socket wrench, install the outer seat track with the 4 torx® screws.

Torque: 15 N·m (153 kgf·cm, 11 ft·lbf)

8. INSTALL INNER SEAT TRACK

Perform the same procedure on the inner seat track.

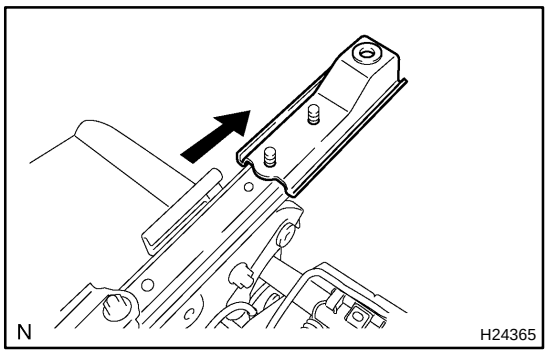

9. INSTALL INNER SEAT TRACK LOWER FRONT AND REAR BRACKET

HINT:

When installing the inner seat track lower rear bracket, slide the inner seat track as shown in the illustration.

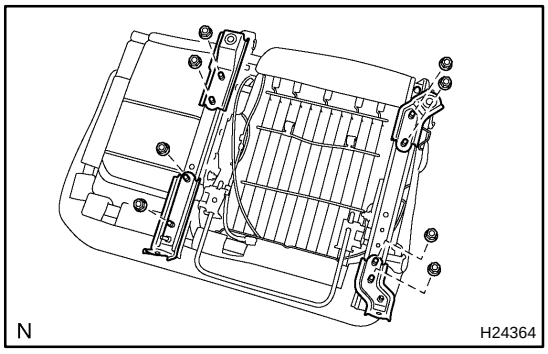

(a) Install the inner seat track lower rear bracket with the 2 nuts.

Torque: 20 N·m (204 kgf·cm, 15 ft·lbf)

(b) Install the inner seat track lower front bracket with the 2 nuts.

Torque: 20 N·m (204 kgf·cm, 15 ft·lbf)

10. INSTALL OUTER SEAT TRACK LOWER FRONT AND REAR BRACKET

(a) Install the outer seat track lower rear bracket with the 2 nuts.

Torque: 20 N·m (204 kgf·cm, 15 ft·lbf)

(b) Install the outer seat track lower front bracket with the 2 nuts.

Torque: 20 N·m (204 kgf·cm, 15 ft·lbf)

11. INSTALL SEAT HINGE COVER

Install the seat hinge cover with the screw.

12. INSTALL RH SEAT CUSHION INNER SHIELD AND SEAT CUSHION COVER

Install the RH seat cushion inner shield and seat cushion cover with the 2 screws.

13. INSTALL RH CENTER SEAT HINGE COVER

Install the RH center seat hinge cover with the 2 screws.

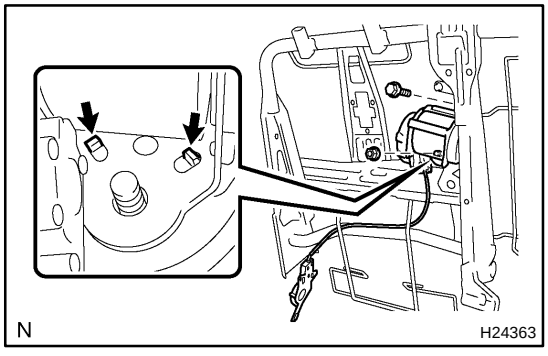

14. INSTALL FRONT SEAT CENTER BELT

(a) Install the front seat center belt with the bolt and nut.

Torque:

Bolt: 21 N·m (214 kgf·cm, 15 ft·lbf)

Nut: 42 N·m (430 kgf·cm, 32 ft·lbf)

HINT:

Check that the seatback frame claws are securely engaged.

15. INSTALL SHOULDER BELT COVER

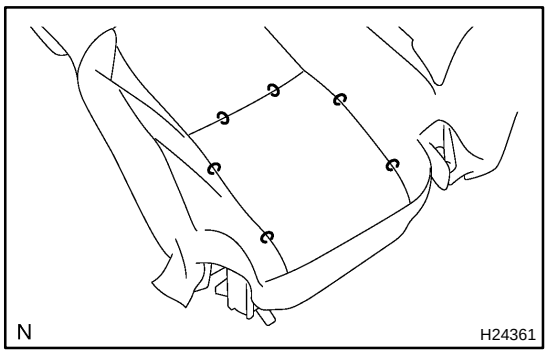

16. INSTALL SEATBACK COVER

Install the seatback cover to the seatback pad with the hog rings.

HINT:

When installing the hog rings, take as much care as possible to prevent wrinkles.

17. INSTALL SEATBACK FRAME

(a) Install the seatback frame to the seatback pad.

(b) Install the seatback lock upper bezel.

(c) Install the 4 headrest supports to the seatback assembly.

18. INSTALL SEATBACK ASSEMBLY

(a) Install the bushing to the seatback frame.

(b) Using a torx® socket wrench, install the seatback assembly with the 2 torx® screws to the seat cushion assembly.
Torque: 42 N·m (430 kgf·cm, 32 ft·lbf)

(c) Install the 3 bolts.
Torque:
Bolt A: 55 N·m (561 kgf·cm, 41 ft·lbf)
Bolt B: 21 N·m (214 kgf·cm, 15 ft·lbf)

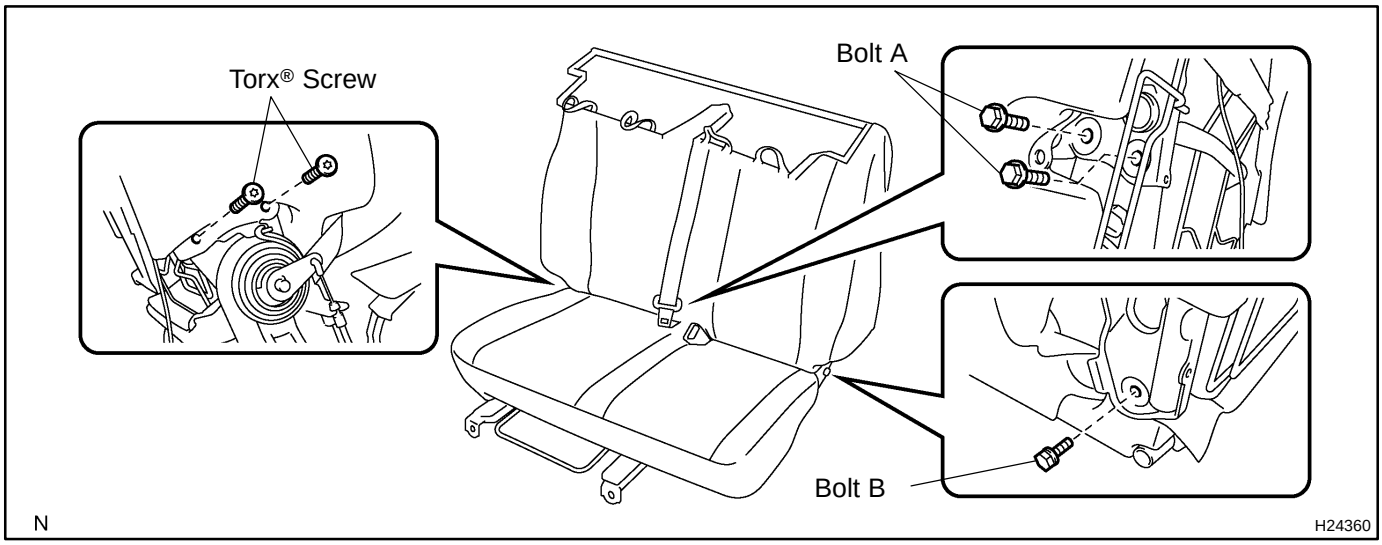

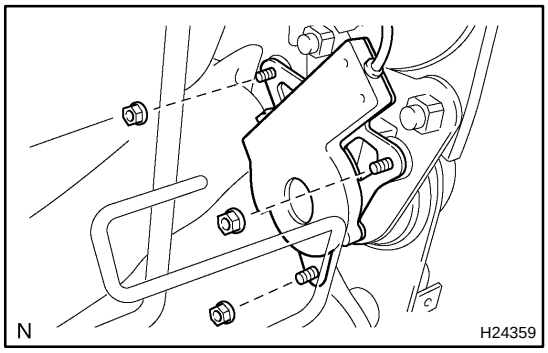

(d) Connect the front seat center belt with the 3 nuts.
Torque: 5.5 N·m (56 kgf·cm, 49 in.·lbf)

(e) Install the RH reclining adjuster inside cover with the 2 screws.

(f) Install the RH seat cushion lower shield with the screw.

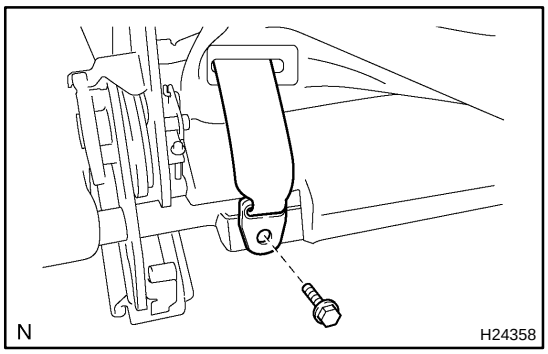

(g) Connect the front seat center belt with the bolt to the seat cushion assembly.
Torque: 42 N·m (430 kgf·cm, 32 ft·lbf)

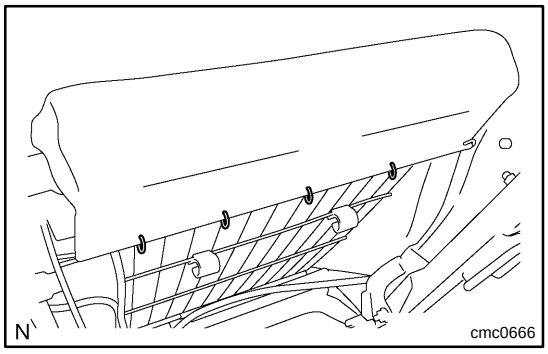

(h) Install the hog rings to the seat cushion cover.
HINT:
When installing the hog rings, take as much care as possible to prevent wrinkles.

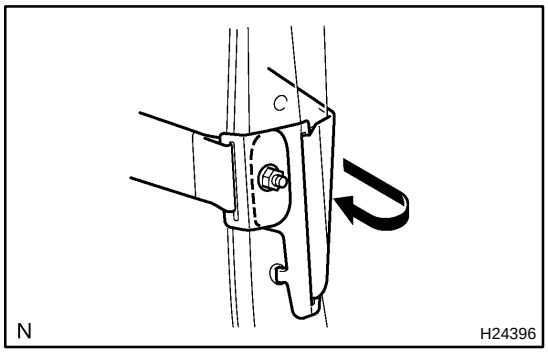

(i) w/ Side airbag:
Connect the seatback cover bracket to the seatback frame with the nut.
Torque: 5.5 N·m (56 kgf·cm, 49 in.·lbf)

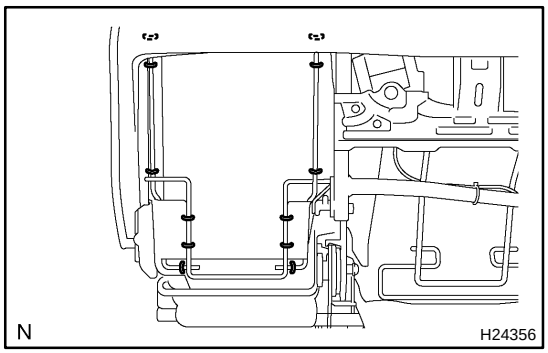

(j) Install the hog rings to the seatback cover.
HINT:
When installing the hog rings, take as much care as possible to prevent wrinkles.
(k) Install the 2 bushings.
(l) Install the center armrest assembly with the bolt.
Torque: 20 N·m (204 kgf·cm, 15 ft·lbf)
(m) Close the fastener.

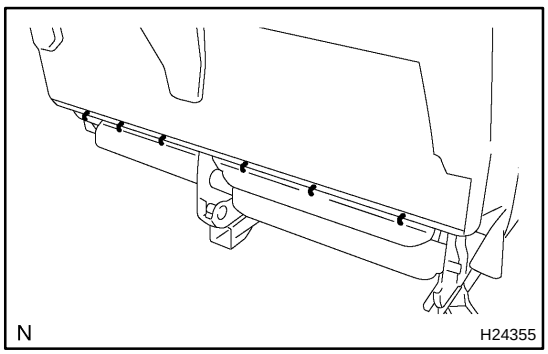

(n) Install the hog rings to the seatback cover.
HINT:
When installing the hog rings, take as much care as possible to prevent wrinkles.
(o) Install the hog rings to the rearmost portion of the seat cushion frame.
(p) Hook the seatback cover belt to the hook.

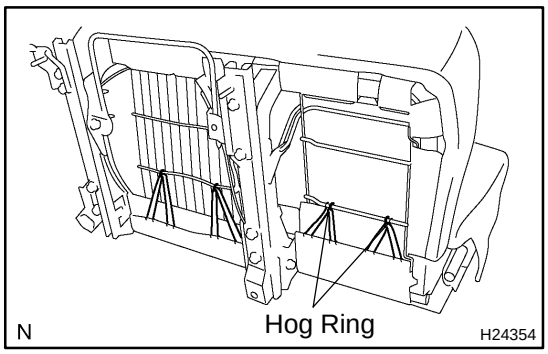

(q) Install the hog rings to the seatback cover belt.

19. INSTALL SEAT CUSHION LOWER SHIELD

Install the seat cushion lower shield with the 2 screws.

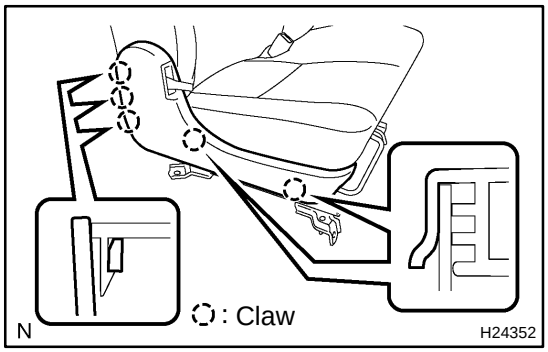

20. INSTALL RH SEAT CUSHION SHIELD

Engage the claws and install the RH seat cushion shield.

21. INSTALL RECLINING ADJUSTER RELEASE HANDLE

22. INSTALL HEADRESTS

23. INSTALL SEAT LEG INNER COVER

Install the seat leg inner cover with the 3 screws.

24. INSTALL SEAT POSITION SENSOR
(See page RS−149)

25. INSTALL SEAT POSITION SENSOR PROTECTOR
(See page RS−149)

26. INSTALL OCCUPANT CLASSIFICATION ECU
(See page RS−157)

BO4SX−01

REMOVAL

CAUTION:

Work must not be started until at least 90 seconds after the ignition switch is turned to the LOCK position and the negative (−) terminal cable is disconnected from the battery.

(The SRS is equipped with a back−up power source. If work is started within 90 seconds from disconnecting the negative (−) terminal cable of the battery, the SRS may deploy.)

1. DISCONNECT CABLE FROM NEGATIVE BATTERY TERMINAL

Wait for 90 seconds after disconnecting the cable to prevent the airbag working.

2. REMOVE SEAT TRACK COVERS

Using a screwdriver, remove the seat track covers.

HINT:

Tape the screwdriver tip before use.

3. REMOVE FRONT SEAT

(a) Remove the 4 bolts.

(b) Disconnect the connectors.

(c) w/ Side airbag:
Disconnect the airbag connector.

(d) Remove the front seat.

NOTICE:

Be careful not to damage the vehicle body.

BO4PY−02

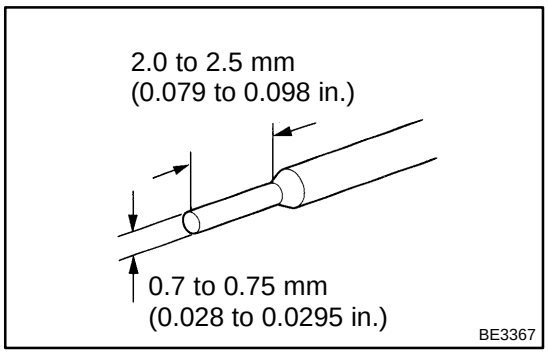

ADJUSTMENT

ADJUST WASHER NOZZLE

Using a tool like the one shown in the illustration, change the direction of the nozzle hole to adjust the point where washer fluid hits the windshield.

FRONT WIPER AND WASHER

BO0IA−04

COMPONENTS

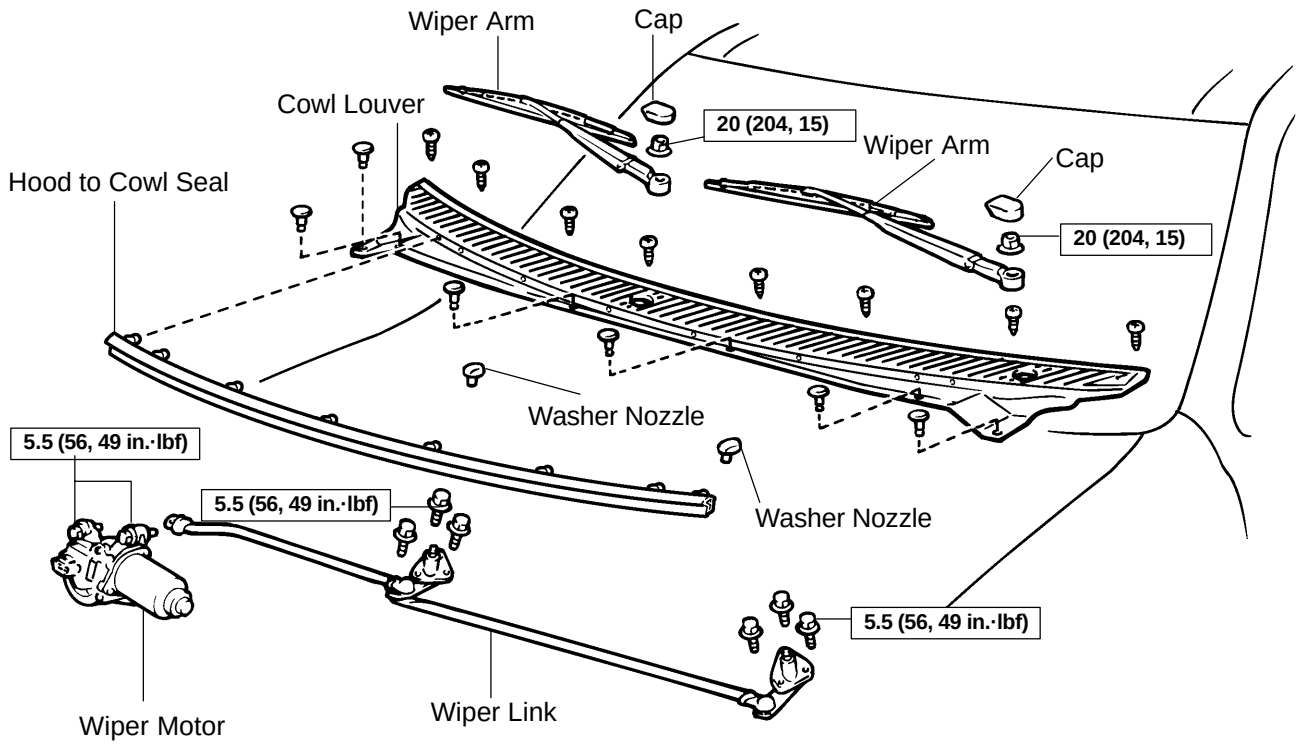

N·m (kgf·cm, ft·lbf) : Specified torque

T

H16690

BO40L−03

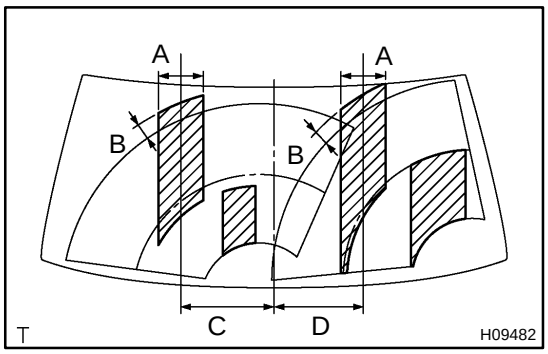

INSPECTION

1. INSPECT WASHER NOZZLE

(a) While operating the washer, check whether the upper point where the washer fluid hits the windshield and the surge area are within the range indicated by the hatched line.

A	Approx. 150 mm (5.90 in.)
B	Approx. 50 mm (1.97 in.)
C	Approx. 312.3 mm (12.295 in.)
D	Approx. 299.2 mm (11.780 in.)

(b) Check if the lower point where the washer fluid hits the windshield is within the range of the wiping pattern (the area of the glass which is wiped by the wiper blades).

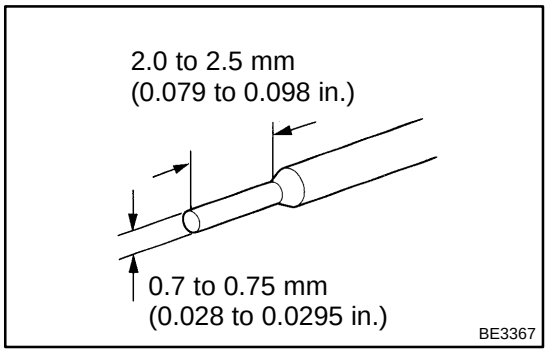

2. ADJUST WASHER NOZZLE

Using a tool like the one shown in the illustration, change the direction of the nozzle hole to adjust the point where washer fluid hits the windshield.

BO2ER−02

INSTALLATION

1. INSTALL WASHER NOZZLES

2. INSTALL WIPER LINK

Install the wiper link through the service hole, then torque the 6 bolts.

Torque: 5.5 N·m (56 kgf·cm, 49 in.·lbf)

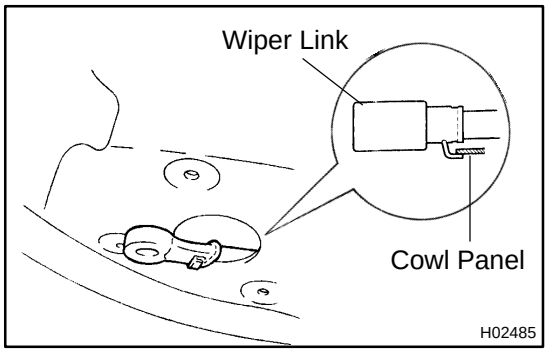

3. INSTALL WIPER MOTOR

(a) Install the wiper motor to the wiper link.

HINT:

When installing the wiper motor, connect the claw of wiper link to the cowl panel shown in the illustration.

(b) Torque the 4 bolts.

Torque: 5.5 N·m (56 kgf·cm, 49 in.·lbf)

(c) Connect the connector.

4. INSTALL HOOD TO COWL TOP SEAL

Install the hood to cowl top seal to the cowl top ventilator louver.

5. INSTALL COWL TOP VENTILATOR LOUVER

Install the cowl top ventilator louver with the 8 screws and 6 clips.

6. INSTALL WIPER ARMS

(a) Operate the wiper once and turn the wiper switch OFF.

(b) Install the wiper arms and tighten the nuts by hand.

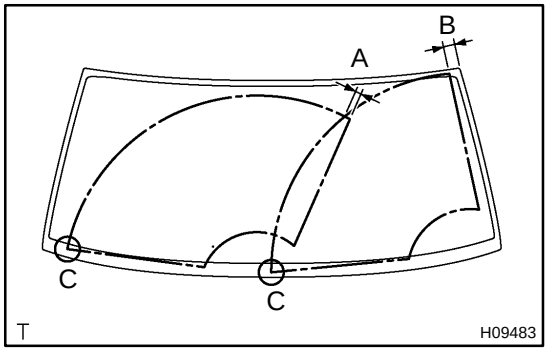

(c) Adjust the installation positions of the wiper arms to the positions shown in the illustration.

A: Approx. 25.4 mm (1.000 in)

B: Approx. 40.0 mm (1.574 in)

HINT:

When installing the wiper arms, make sure that the tips of the blades are not beyond the ceramic edge as indicated ”C” part in the illustration.

(d) Torque the 2 nuts.

Torque: 20 N·m (205 kgf·cm, 15 ft·lbf)

(e) Install the 2 caps.

BO0IB−05

REMOVAL

1. REMOVE WIPER ARMS

(a) Using a screwdriver, remove the 2 caps.

HINT:

Tape the screwdriver tip before use.

(b) Remove the 2 nuts and wiper arms.

2. REMOVE COWL TOP VENTILATOR LOUVER

(a) Using a clip remover, remove the 6 clips.

(b) Remove the 8 screws and cowl top ventilator louver.

3. REMOVE HOOD TO COWL TOP SEAL

Remove the hood to cowl top seal from the cowl top ventilator louver.

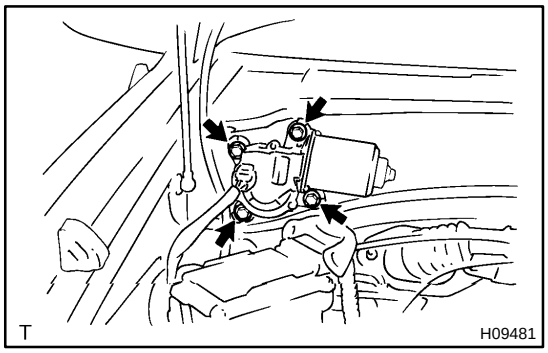

4. REMOVE WIPER MOTOR

(a) Disconnect the connector.

(b) Unfasten the 4 bolts.

(c) Disconnect the wiper motor from the wiper link, then remove the wiper motor.

5. REMOVE WIPER LINK

(a) Remove the 6 bolts.

(b) Remove the wiper link through the service hole.

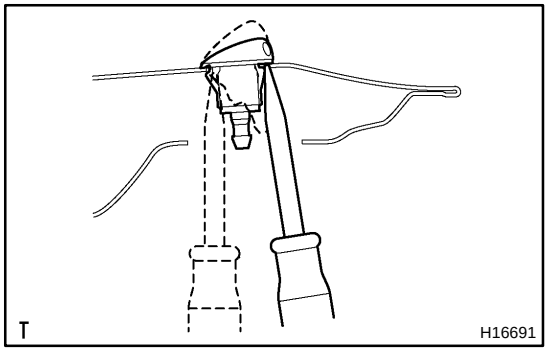

6. REMOVE WASHER NOZZLE

(a) Disconnect the washer hose.

(b) Using a screwdriver, remove the nozzle.

HINT:

Tape the screwdriver tip before use.

(c) Perform the same procedure on the other side.

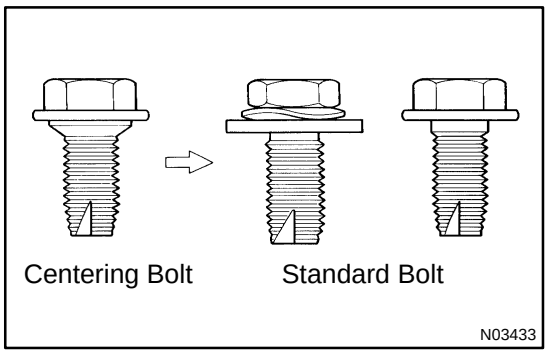

HOOD

ADJUSTMENT

BO0I1–03

HINT:

Since the centering bolt is used as the hood hinge set bolt, the hood cannot be adjusted with it on. Substitute the standard bolt for the centering bolt.

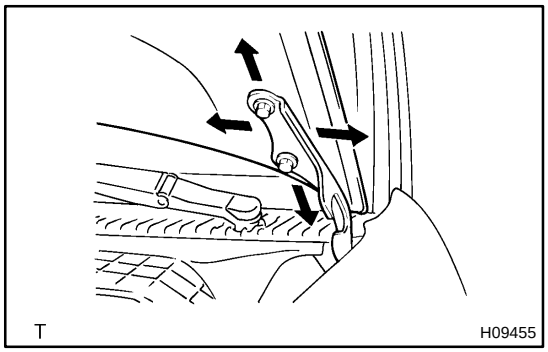

1. ADJUST HOOD IN FORWARD/REARWARD

Adjust the hood by loosening the hood side hinge bolts.

Torque: 13 N·m (133 kgf·cm, 10 ft·lbf)

2. ADJUST HOOD IN VERTICAL DIRECTIONS

(a) Remove the bolts and increase or decrease the number of washers between the hinge and hood.

(b) Install the bolts again.

Torque: 13 N·m (133 kgf·cm, 10 ft·lbf)

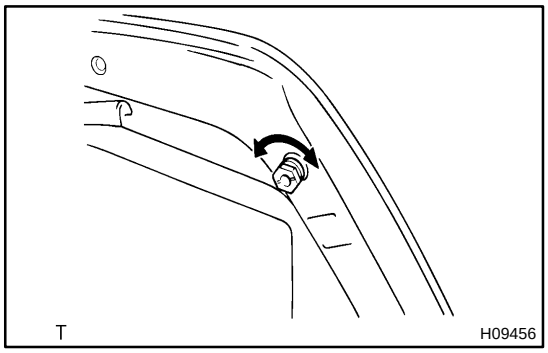

3. ADJUST FRONT EDGE OF HOOD IN VERTICAL DIRECTION

Adjust the hood by turning the cushions.

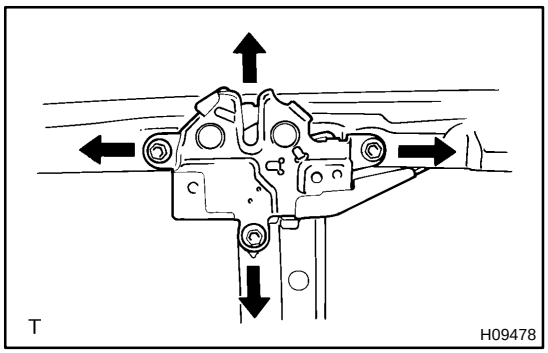

4. ADJUST HOOD LOCK

Adjust the lock by loosening the bolts.

Torque: 7.8 N·m (80 kgf·cm, 69 in.·lbf)

HOOD SUPPORT

BO2EK−03

REPLACEMENT

1. REMOVE HOOD SUPPORT

(a) Remove the bolt and hood support from the hood.

HINT:

While supporting the hood by hand, remove the hood support from the hood.

(b) Remove the bolt and hood support.

2. IF NECESSARY, REPLACE HOOD SUPPORT

NOTICE:

Handling the hood support

- **Do not disassemble the support as the cylinder is filled with pressurized gas.**

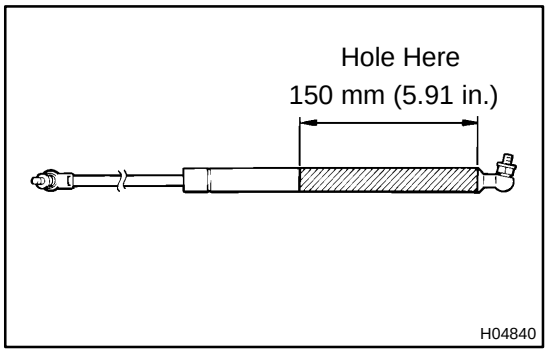

- **If the hood support is to be replaced, drill a 2.0 to 3.0 mm (0.079 to 0.118 in.) hole in the area shown in the illustration to completely release the high pressure gas before disposing of it.**
- **When drilling, chips may fly out so work carefully.**
- **The gas is colorless, odorless and non − toxic.**
- **When working, handle the hood support carefully. Never score or scratch the exposed part of the piston rod, and allow any paint or oil to get on it.**
- **Do not turn the piston rod and cylinder with the hood support fully extended.**

3. INSTALL HOOD SUPPORT

(a) Install the bolt and hood support to the body.
Torque: 22 N·m (224 kgf·cm, 16 ft·lbf)

(b) Install the bolt and hood support to the hood.
Torque: 22 N·m (224 kgf·cm, 16 ft·lbf)

INSTRUMENT PANEL

BO4QE−04

COMPONENTS

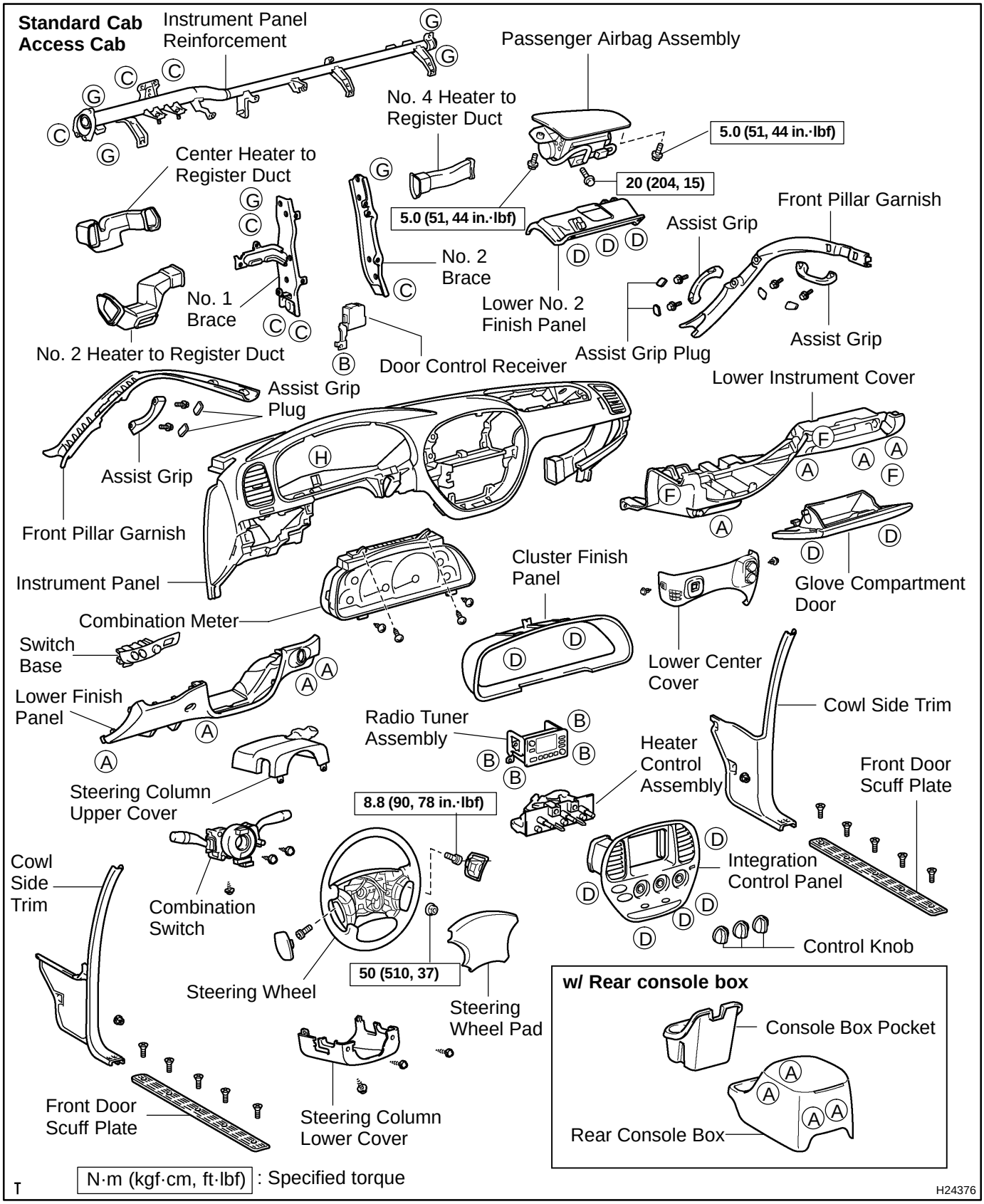

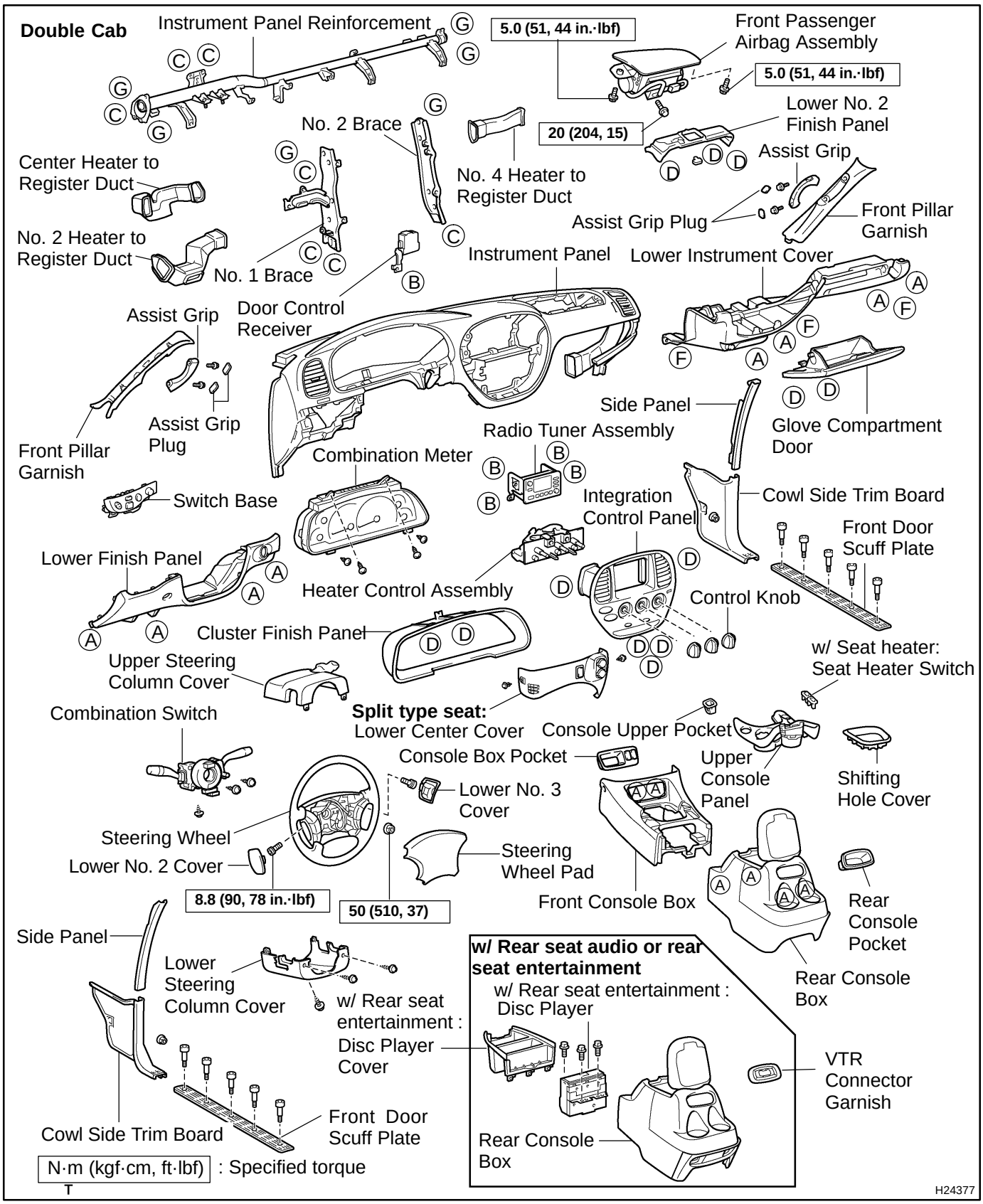
Double Cab
Instrument Panel Reinforcement
5.0 (51, 44 in.·lbf)
Front Passenger Airbag Assembly
5.0 (51, 44 in.·lbf)
Lower No. 2 Finish Panel
20 (204, 15)
No. 2 Brace
No. 4 Heater to Register Duct
Assist Grip
Center Heater to Register Duct
Assist Grip Plug
Front Pillar Garnish
No. 2 Heater to Register Duct
No. 1 Brace
Instrument Panel
Lower Instrument Cover
Door Control Receiver
Assist Grip
Assist Grip Plug
Front Pillar Garnish
Side Panel
Glove Compartment Door
Radio Tuner Assembly
Combination Meter
Switch Base
Integration Control Panel
Cowl Side Trim Board
Front Door Scuff Plate
Lower Finish Panel
Heater Control Assembly
Control Knob
Cluster Finish Panel
Upper Steering Column Cover
w/ Seat heater: Seat Heater Switch
Split type seat: Lower Center Cover
Console Upper Pocket
Combination Switch
Console Box Pocket
Upper Console Panel
Shifting Hole Cover
Lower No. 3 Cover
Steering Wheel
Steering Wheel Pad
Lower No. 2 Cover
8.8 (90, 78 in.·lbf)
50 (510, 37)
Front Console Box
Rear Console Pocket
Side Panel
Lower Steering Column Cover
w/ Rear seat entertainment : Disc Player Cover
w/ Rear seat entertainment : Disc Player
Rear Console Box
VTR Connector Garnish
Cowl Side Trim Board
Front Door Scuff Plate
Rear Console Box
N·m (kgf·cm, ft·lbf) : Specified torque
T
H24377

Access Cab
Large Type Console Box

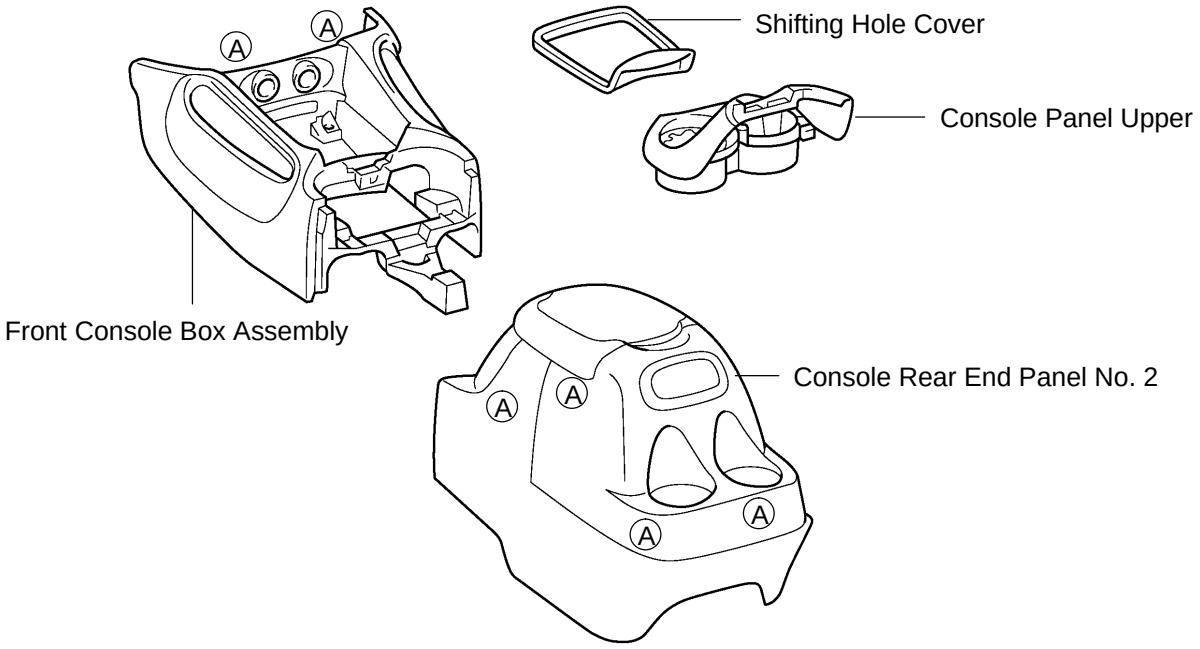

T

H20694

Standard Cab
Access Cab
Double Cab

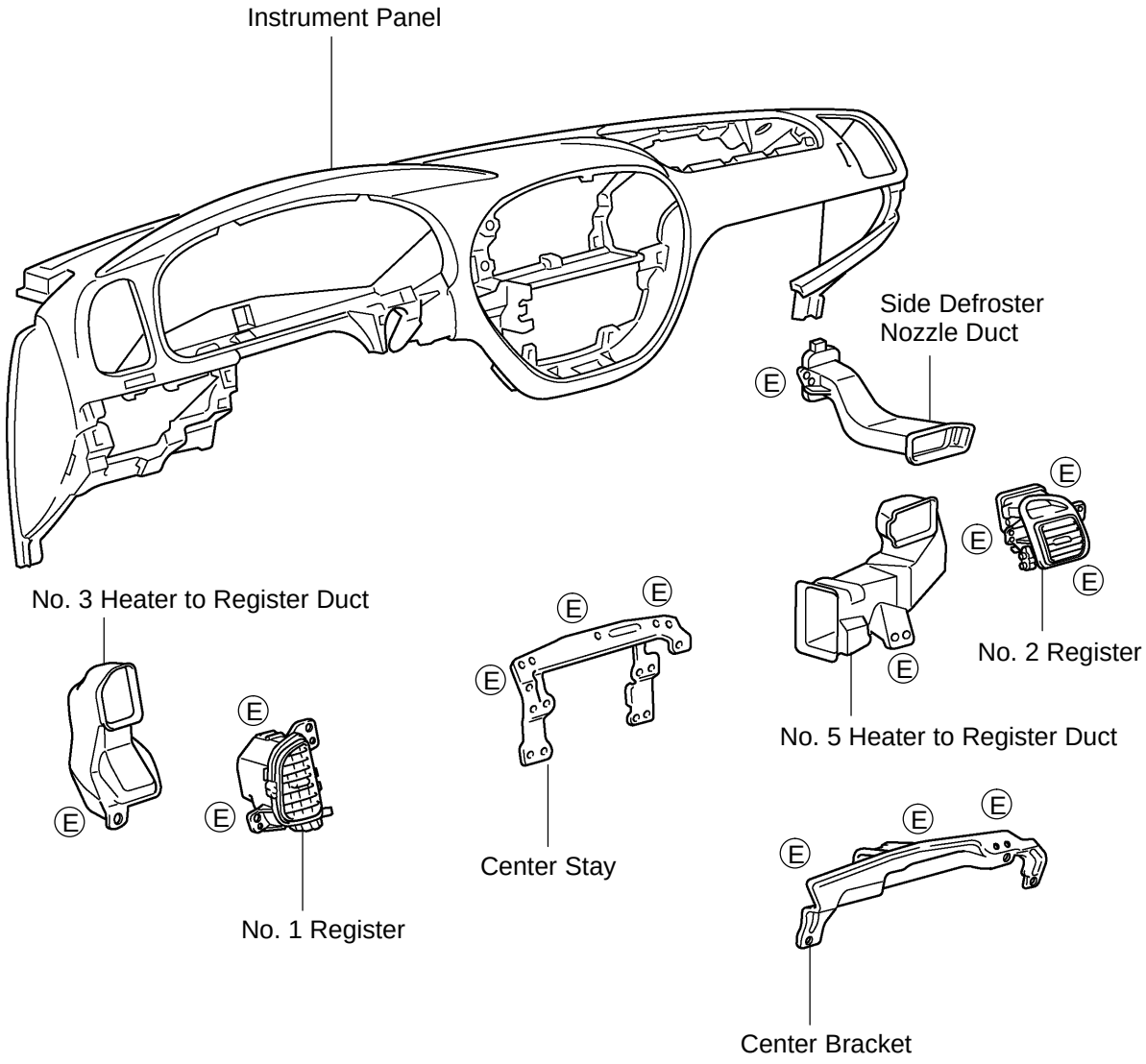

T

H21123

The shapes and sizes of the screws, bolts and nuts are indicated in the table below. The codes (A−H) correspond to those indicated in COMPONENTS on the previous pages.

mm (in.)

Code	Shape	Size	Code	Shape	Size	Code	Shape	Size
Ⓐ	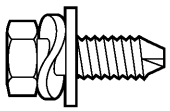	ø = 6 (0.24) L = 25 (0.98)	Ⓑ	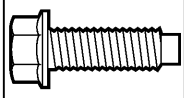	ø = 6 (0.24) L = 14 (0.55)	Ⓒ	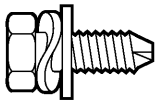	ø = 8 (0.31) L = 22 (0.87)
Ⓓ		ø = 5.22 (0.2055) L = 16 (0.63)	Ⓔ	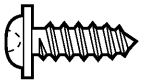	ø = 5 (0.20) L = 16 (0.63)	Ⓕ	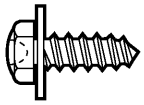	ø = 5 (0.20) L = 16 (0.63)
Ⓖ	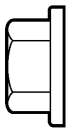	ø = 8 (0.31)	Ⓗ	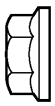	ø = 6 (0.24)			

T

H11188

BO2F5−03

DISASSEMBLY

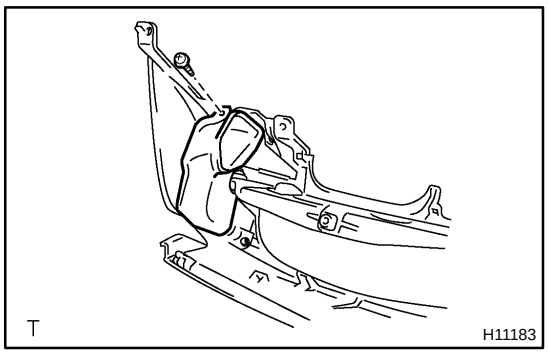

1. REMOVE NO. 3 HEATER TO REGISTER DUCT

Remove the screw and duct.

2. REMOVE NO. 1 REGISTER

Remove the 2 screws and register.

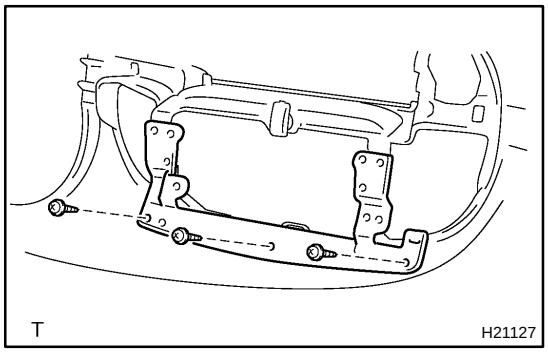

3. REMOVE CENTER STAY

Remove the 3 screws and center stay.

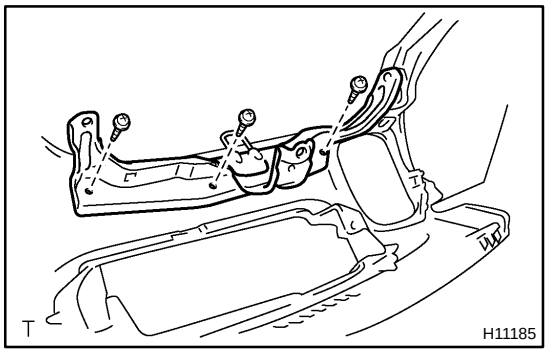

4. REMOVE CENTER BRACKET

Remove the 3 screws and center bracket.

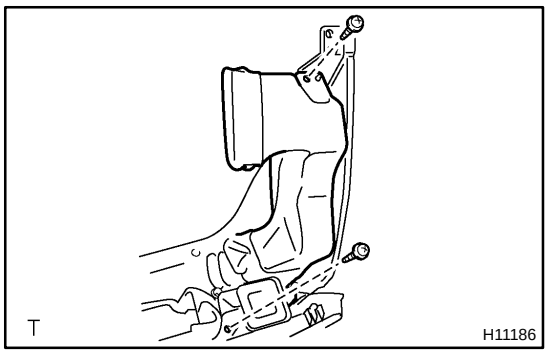

5. REMOVE NO. 5 HEATER TO REGISTER DUCT

Remove the screw and duct.

6. REMOVE SIDE DEFROSTER NOZZLE DUCT

Remove the screw and duct.

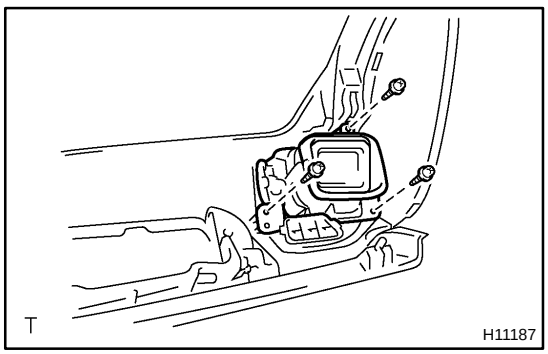

7. REMOVE NO. 2 REGISTER

Remove the 3 screws and register.

BO2F6−04

INSTALLATION

Installation is in the reverse order of removal (see page BO−111).

CONNECT CABLE TO NEGATIVE BATTERY TERMINAL

BO0J5−04

REASSEMBLY

Reassembly is in the reverse order of disassembly (see page BO−118).

BO4QF−04

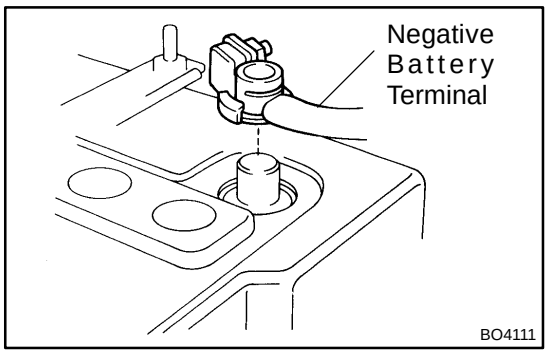

REMOVAL

HINT:

A bolt without a torque specification is shown in the standard bolt chart (see page SS−2).

1. DISCONNECT CABLE FROM NEGATIVE BATTERY TERMINAL

Disconnect the cable from the negative (−) battery terminal.

NOTICE:

If the cable is disconnected from the negative battery terminal, the preset AM and FM stations stored in the memory will be erased. Be sure to make note of them before disconnecting the cable.

CAUTION:

Work must not be started until at least 90 seconds after the ignition switch is turned to the LOCK position and the cable is disconnected from the negative (−) battery terminal. (The SRS is equipped with a back−up power source. If work is started within 90 seconds of disconnecting the cable from the negative (−) battery terminal, the SRS may deploy.)

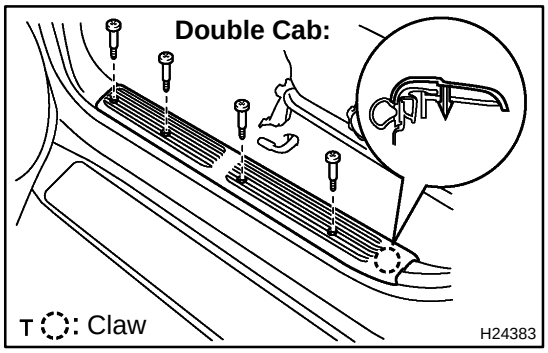

2. REMOVE FRONT DOOR SCUFF PLATE

(a) Standard cab:
Remove the 5 screws and front door scuff plate.

(b) Access cab (standard and wide body type):
Remove the 4 screws and front door scuff plate.

(c) Double cab:
Remove the 4 screws and front door scuff plate.

(d) Use the same procedures described above on the other side.

3. Standard cab:
Access cab:
REMOVE COWL SIDE TRIM

(a) Remove the 2 clips and cowl side trim.

(b) Use the same procedures described above on the other side.

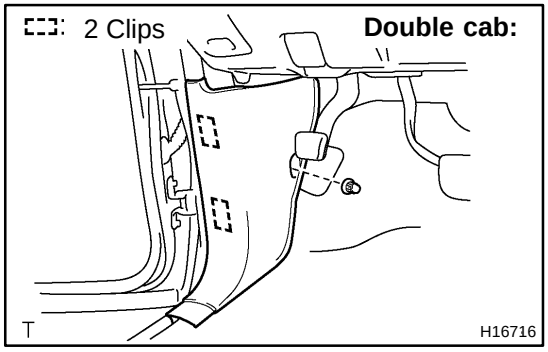

4. Double cab:
REMOVE COWL SIDE TRIM BOARD

(a) Remove the nut, 2 clips and cowl side trim board.

(b) Use the same procedures described above on the other side.

5. Double cab:
REMOVE SIDE PANEL

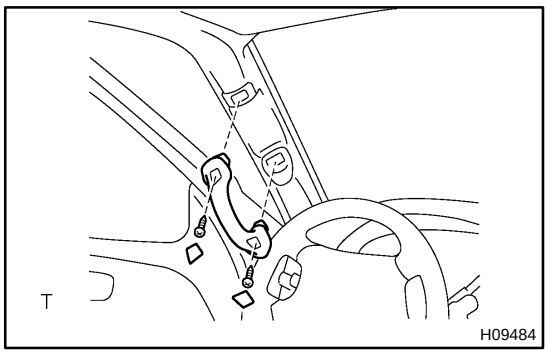

6. REMOVE ASSIST GRIPS

(a) Using a screwdriver, remove the plugs.

HINT:

Tape the screwdriver tip before use.

(b) Driver side:

Using a torx® driver, remove the 2 torx® screws and assist grip.

Torx® driver:

T30 (Part No.09041−00030 or locally manufactured tool)

(c) Standard cab (Passenger side):

Access cab (Passenger side):

Using a torx® driver, remove the 4 torx® screws and 2 assist grips.

Torx® driver: T30 (Part No.09041−00030 or locally manufactured tool)

(d) Double cab (Passenger side):

Using a torx® driver, remove the 2 torx® screws and assist grips.

Torx® driver:

T30 (Part No.09041−00030 or locally manufactured tool)

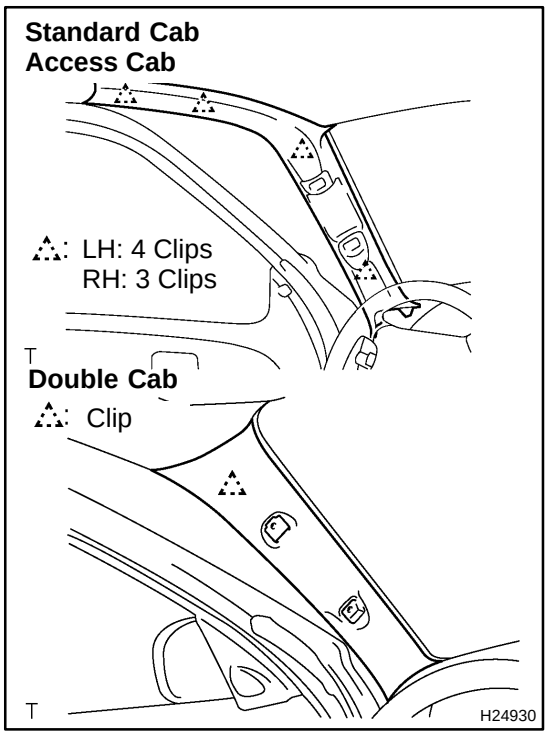

7. REMOVE FRONT PILLAR GARNISH

(a) Using a screwdriver, remove the front pillar garnish.

HINT:

Tape the screwdriver tip before use.

(b) Use the same procedures described above on the other side.

8. REMOVE STEERING WHEEL PAD

(See page SR−18, SR−33)

9. REMOVE STEERING WHEEL

(See page SR−18, SR−33)

10. REMOVE STEERING COLUMN COVERS

(See page SR−18, SR−33)

11. REMOVE COMBINATION SWITCH

Disconnect the 4 connectors and remove the 3 screws and combination switch.

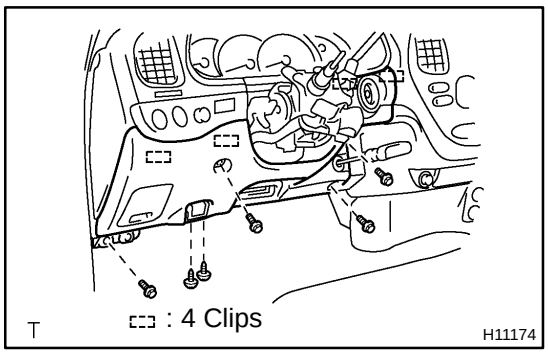

12. REMOVE LOWER FINISH PANEL

(a) Remove the 2 screws and hood lock release lever.
(b) Remove the 4 bolts and lower finish panel.
(c) Disconnect the connectors.

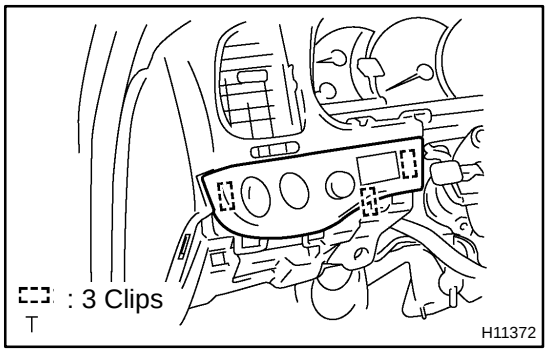

13. REMOVE SWITCH BASE

Using a screwdriver, lift up the switch base and remove it.
HINT:
Tape the screwdriver tip before use.

14. REMOVE NO. 2 HEATER TO REGISTER DUCT

15. REMOVE STEERING COLUMN

(See page SR−18, SR−33)

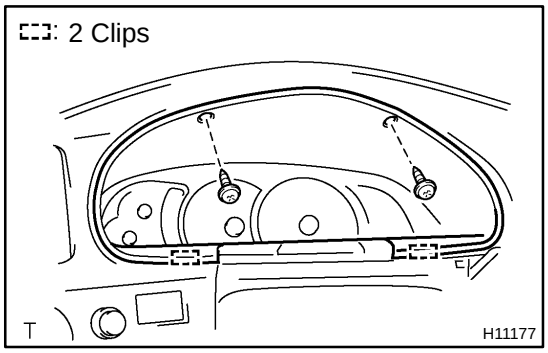

16. REMOVE CLUSTER FINISH PANEL

Remove the 2 screws and cluster finish panel.

17. REMOVE COMBINATION METER

(a) Remove the 4 screws.
(b) Remove the combination meter and disconnect the 4 connectors.

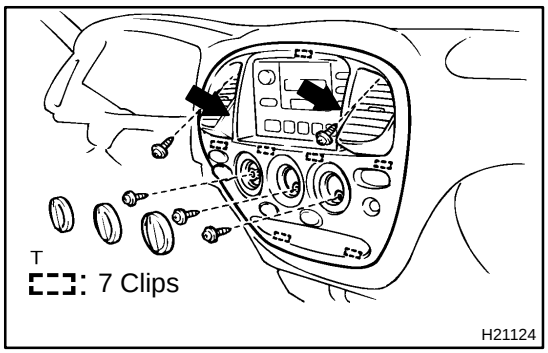

18. REMOVE INTEGRATION CONTROL PANEL

(a) Remove the 3 control knobs.
(b) Remove the 5 screws.
(c) Remove the integration control panel by pulling at the positions indicated by the arrows in the illustration.
(d) Disconnect the connectors.

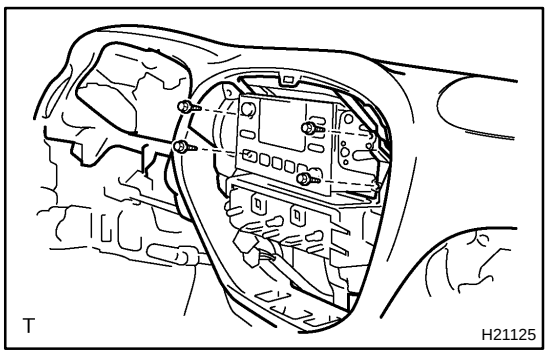

19. REMOVE RADIO TUNER ASSEMBLY

(a) Disconnect the connector.
(b) Remove the 4 bolts and the radio tuner assembly.

20. REMOVE HEATER CONTROL ASSEMBLY

(See page AC−101)

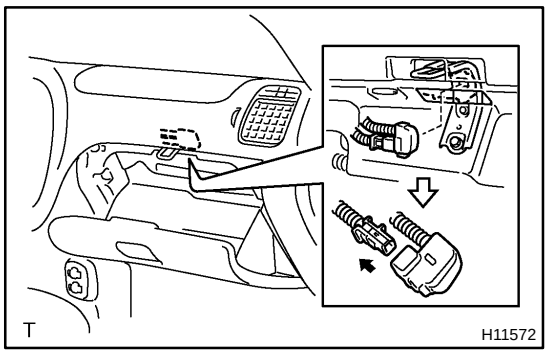

21. DISCONNECT PASSENGER AIRBAG ASSEMBLY CONNECTOR

NOTICE:

When handling the airbag connector, take care not to damage the airbag wire harness.

(a) Using a clip remover, disengage the connector clamp.

(b) Disconnect the connector as shown in the illustration.

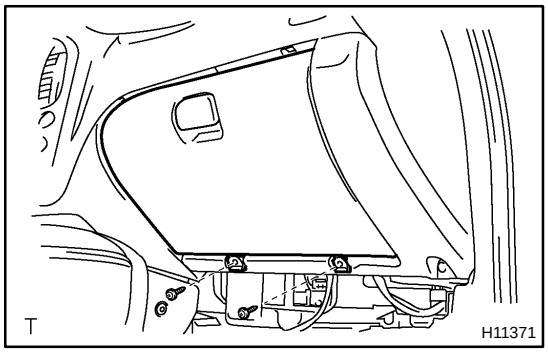

22. REMOVE GLOVE COMPARTMENT DOOR

Remove the 2 screws and glove compartment door.

23. REMOVE LOWER NO. 2 FINISH PANEL

Remove the 3 screws and lower No. 2 finish panel.

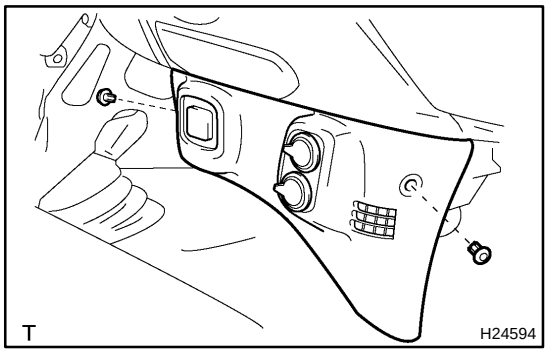

24. Standard cab:
Access cab (w/o Large type console box):
Double cab (Split type seat):
REMOVE LOWER CENTER COVER

(a) Remove the 2 clips and lower center cover.

(b) Disconnect the connectors.

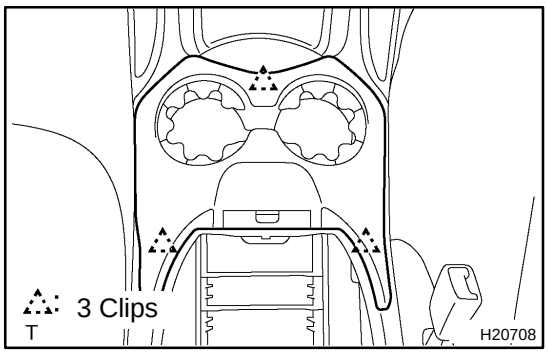

25. Access cab (w/ Large type console box):
REMOVE FRONT CONSOLE BOX ASSEMBLY

(a) Remove the shifting hole cover.

(b) Using a screwdriver, disengage the 3 clips and remove the console panel upper.

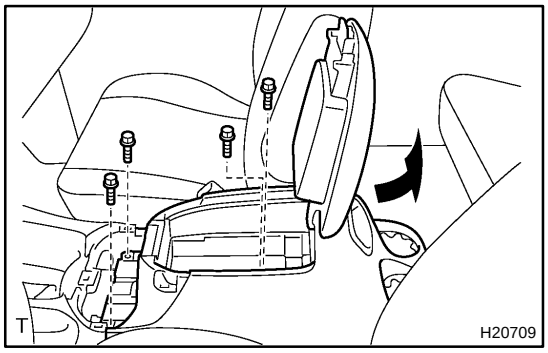

(c) Remove the 4 bolts and console rear end panel No. 2.

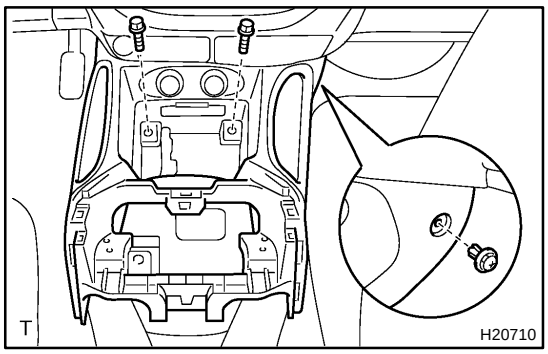

(d) Remove the 2 bolts, clip and the front console box assembly.
(e) Disconnect the connector.

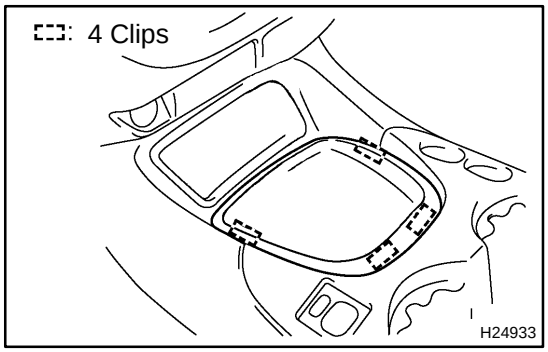

26. Double cab:
REMOVE SHIFTING HOLE COVER

(a) Using a screwdriver, disengage the 4 clips and remove the shifting hole cover.

HINT:
Tape the screwdriver tip before use.

27. Double cab:
REMOVE UPPER CONSOLE PANEL

(a) w/ Seat heater:
Using a screwdriver, remove the seat heater switches, then disconnect the connectors.

HINT:
Tape the screwdriver tip before use.

(b) Using a screwdriver, remove the power mirror control switch, then disconnect the connector.

HINT:
Tape the screwdriver tip before use.

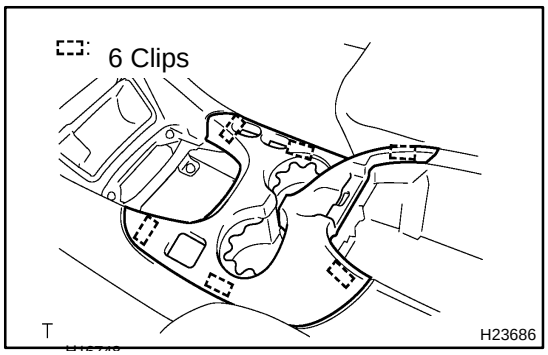

(c) Using a screwdriver, disengage the 6 clips and remove the upper console panel.

HINT:
Tape the screwdriver tip before use.

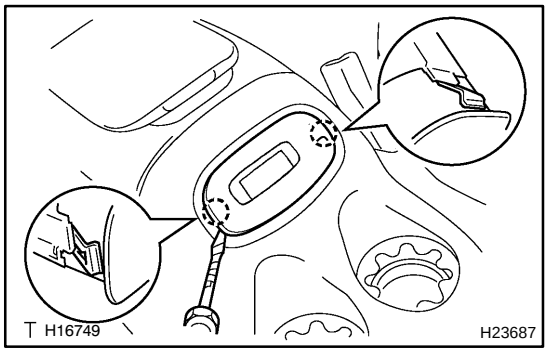

28. Double cab:
REMOVE REAR CONSOLE BOX

(a) w/ VTR control garnish.
Using a screwdriver, disengage the 2 claws, and remove the VTR control garnish and connector.

(b) Disconnect the connector.

HINT:
Tape the screwdriver tip before use.

(c) w/o VTR control garnish.
Using a screwdriver, remove the rear console pocket.

HINT:
Tape the screwdriver tip before use.

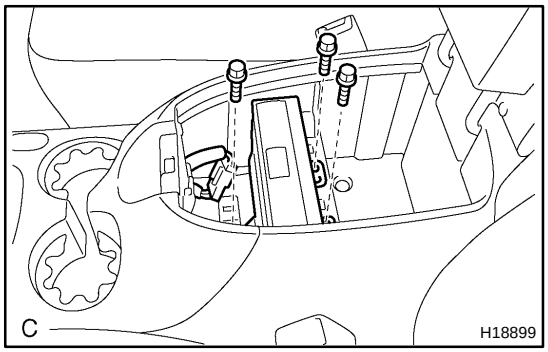

(d) w/ Rear seat entertainment:
(1) Remove the disc bracket.
(2) Remove the 3 bolts and disc player.
(3) Disconnect the connector.

(e) Remove the 4 bolts and rear console box.

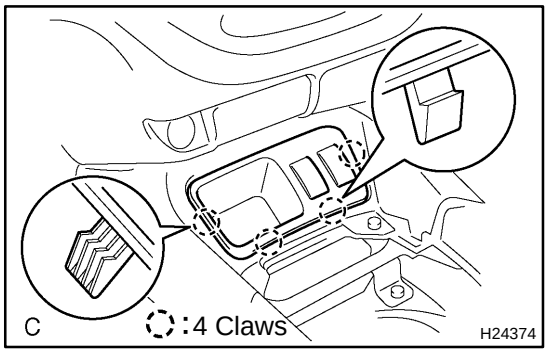

29. Double cab:
REMOVE CONSOLE BOX POCKET

(a) Using a screwdriver, disengage the 4 claws.

HINT:
Tape the screwdriver tip before use.

(b) Disconnect the connectors and remove the console box pocket.

30. REMOVE FRONT CONSOLE BOX

Remove the 2 bolts, 2 clips and front console box.

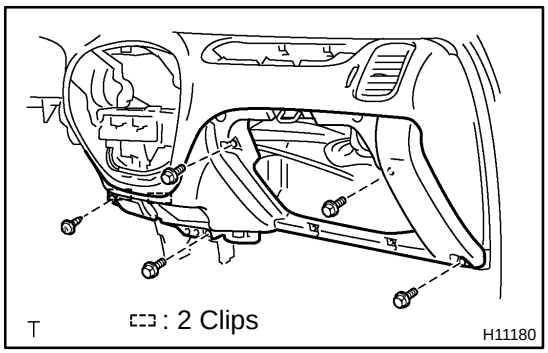

31. REMOVE LOWER INSTRUMENT COVER

(a) Remove the 4 bolts and screw.

(b) Using a screwdriver, disengage the clips and remove the lower instrument cover.

HINT:
Tape the screwdriver tip before use.

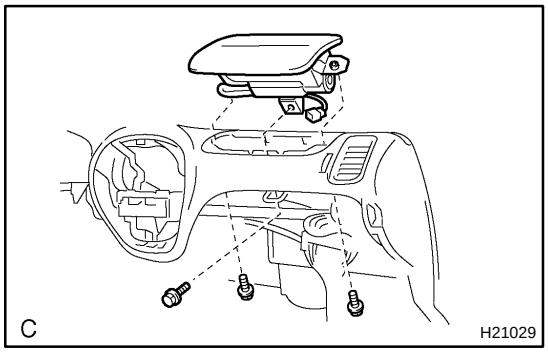

32. REMOVE PASSENGER AIRBAG ASSEMBLY

(a) Remove the 2 bolts which hold the passenger airbag assembly and instrument panel.
Torque: 5.0 N·m (51 kgf·cm, 44 in.·lbf)

(b) Remove the bolt which hold the passenger airbag assembly and instrument panel reinforcement.
Torque: 20 N·m (204 kgf·cm, 15 ft·lbf)

CAUTION:

- **Do not place the passenger airbag assembly with the airbag deployment side facing down.**

- **Never disassemble the passenger airbag assembly.**

33. w/ Rear console box:
REMOVE REAR CONSOLE BOX

(a) Using a screwdriver, remove the console box pocket.

HINT:

Tape the screwdriver tip before use.

(b) Remove the 4 bolts and rear console box.

34. REMOVE NO. 4 HEATER TO REGISTER DUCT

35. REMOVE INSTRUMENT PANEL

(a) Remove the nut.

(b) Disconnect the connectors and remove the instrument panel.

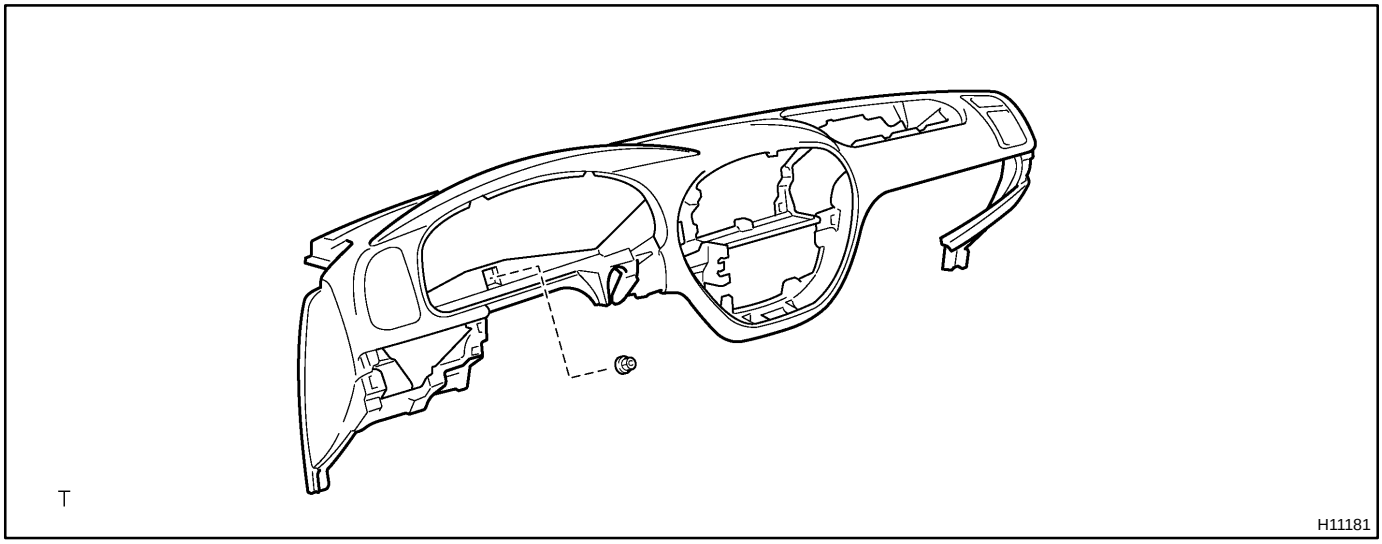

36. REMOVE CENTER HEATER TO REGISTER DUCT

37. REMOVE INSTRUMENT PANEL REINFORCEMENT

(a) Disconnect the connectors.

(b) Remove the bolt and door control receiver.

(c) Remove the 3 bolts, nut and No. 1 brace.

(d) Remove the bolt, nut and No. 2 brace.

(e) Remove the 3 bolts, 4 nuts and instrument panel reinforcement.

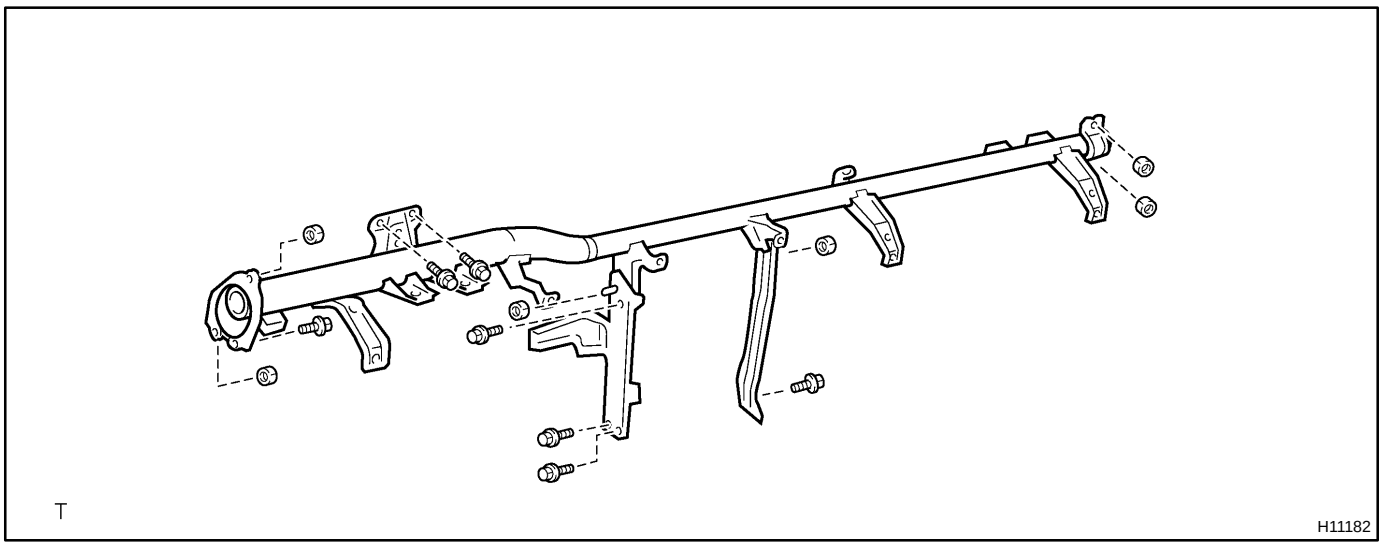

ROOF DRIP SIDE FINISH MOULDING

BO0IL−04

COMPONENTS

Standard cab:

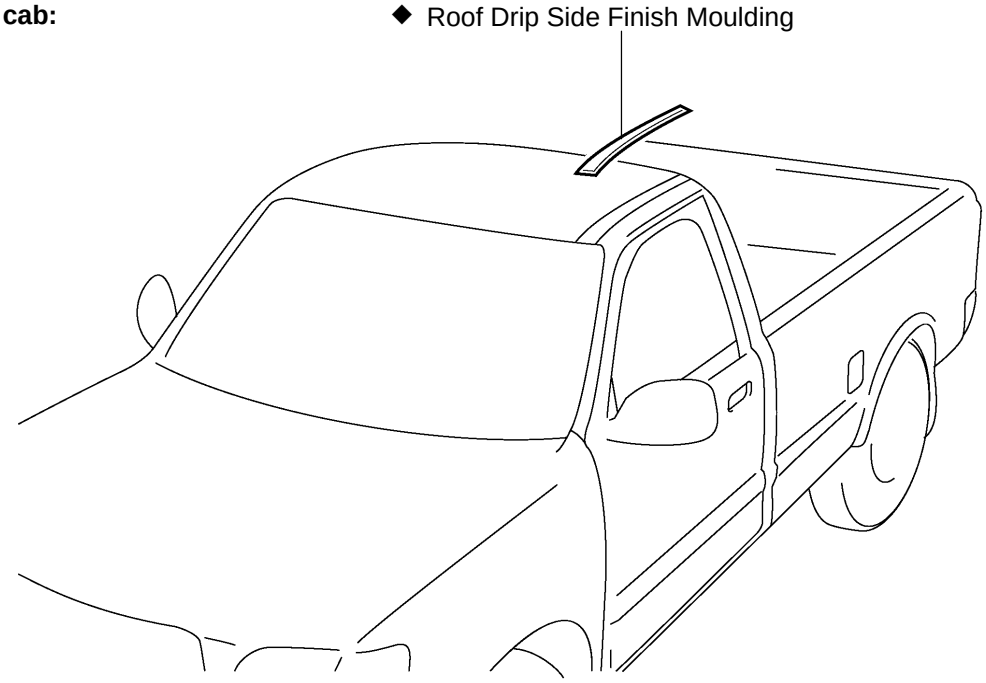

Access cab:

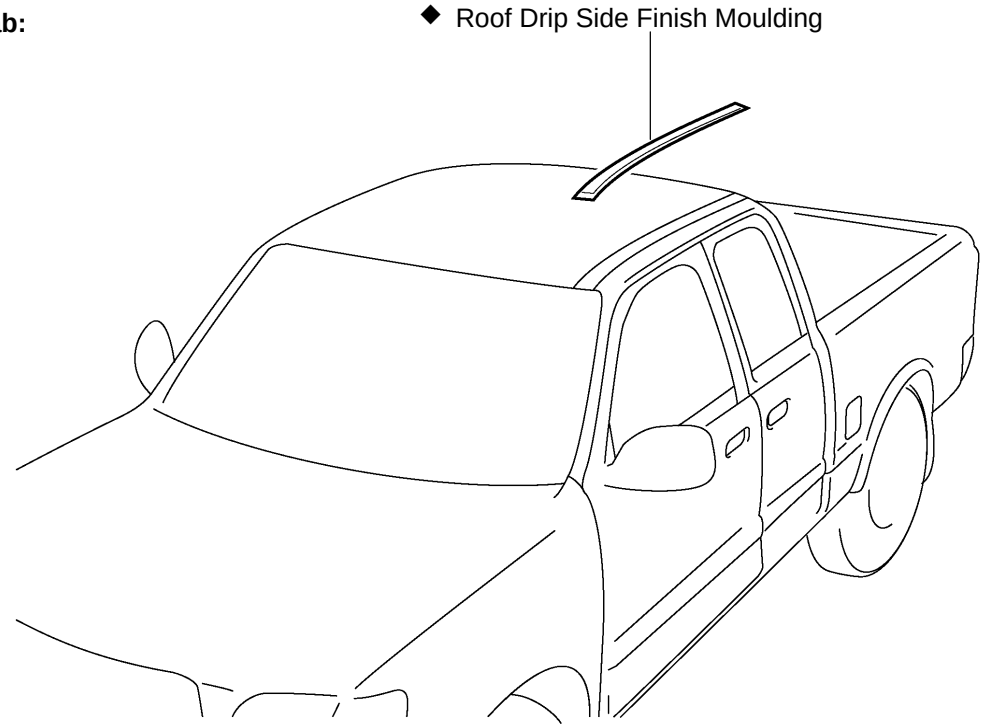

T ◆ Non−reusable part

H11362

BO2EZ−03

INSTALLATION

1. CLEAN CONTACT SURFACE OF BODY

(a) Using a heat light, heat the body surface 40 to 60 °C (104 to 140 °F).

NOTICE:

Do not heat the body excessively.

(b) Using a knife, cut away any rough areas on the body.

NOTICE:

Be careful not to damage the body.

(c) Wipe off stains with cleaner.

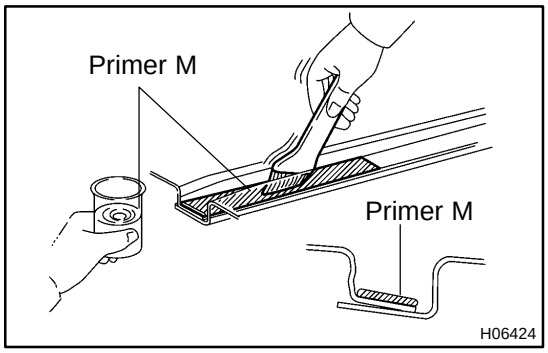

2. COAT CONTACT SURFACE OF BODY WITH PRIMER "M"

Using a brush, coat the body surface except the front and rear end with Primer M as shown in the illustration.

Front end: 23 mm (0.91 in.) + 8 mm (0.31 in.) or less
Rear end: 70 mm (2.76 in.) + 12 mm (0.47 in.) or less

NOTICE:

- **Let the primer coating dry for 3 minutes or more.**
- **Do not coat to the adhesive.**
- **Do not keep any of the opened Primer M for later use.**

3. INSTALL NEW MOULDING

(a) Using a heat light, heat the body and moulding.

Body: 40 to 60 °C (104 to 140 °F)
Moulding: 20 to 30 °C (68 to 86 °F)

NOTICE:

Do not heat the moulding excessively.

(b) Lift the moulding release sheet from face of the moulding.

NOTICE:

When the moulding release sheet is removed, make sure that no dirt or dust con get onto the uncoated area.

(c) Install the moulding.

BO2EY−03

REMOVAL

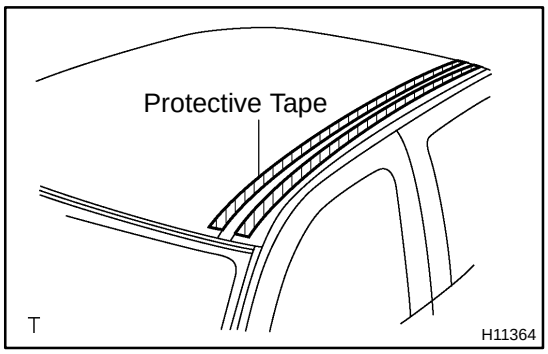

1. REMOVE ENDS OF MOULDING

(a) Apply protective tape to the outer surface as shown in illustration, to keep the surface from being scratched.

(b) Using a heat light, heat the moulding to 20 to 30 °C (68 to 86 °F).

NOTICE:

Do not heat the moulding excessively.

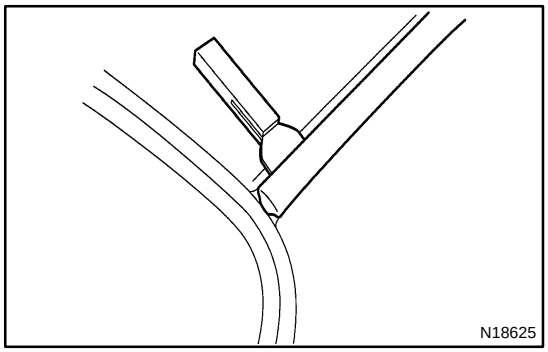

(c) Using a scraper, pull off the roof drip side finish moulding from front end and rear end.

HINT:

Tape the scraper tip before use.

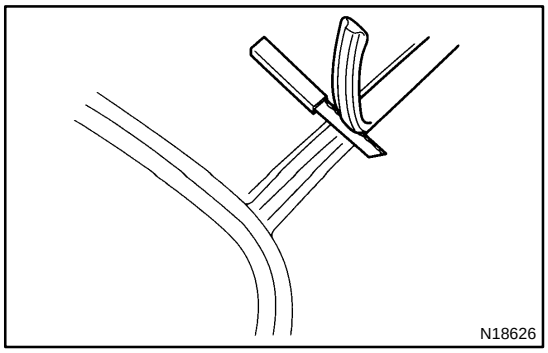

2. REMOVE MOULDING AND ADHESIVE

(a) Pull off the moulding by cutting the adhesive with a knife.

(b) Remove the moulding

NOTICE:

Do not damage the body with the knife.

REAR BUMPER

COMPONENTS

BO2EJ−03

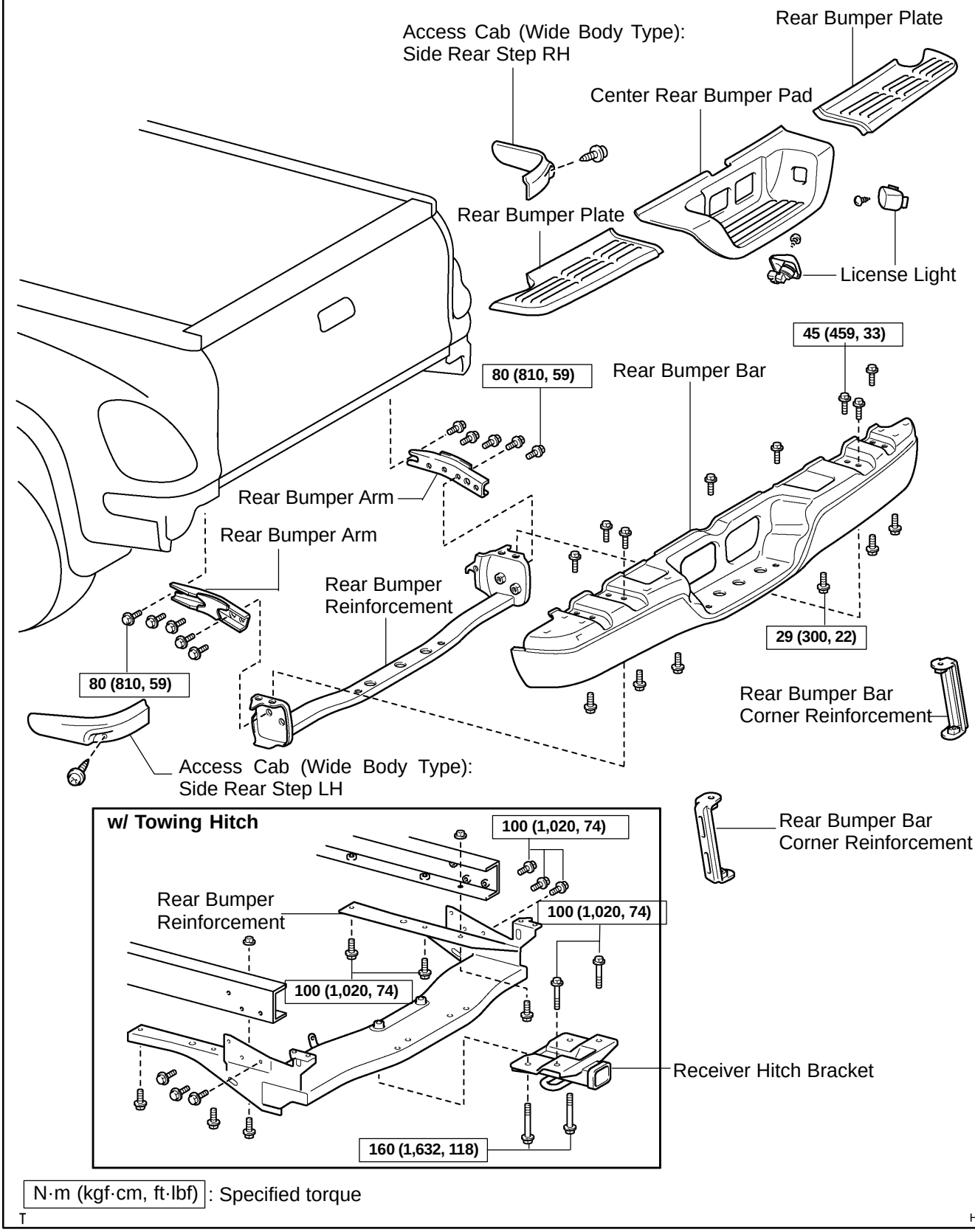

N·m (kgf·cm, ft·lbf) : Specified torque

T

H20690

BO4PW−01

ADJUSTMENT

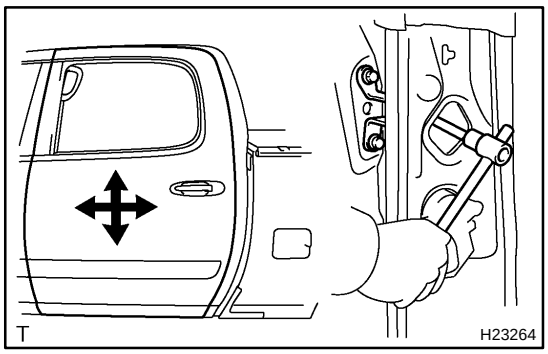

1. ADJUST DOOR IN FORWARD/ REARWARD AND VERTICAL DIRECTIONS

(a) Remove the front and rear door scuff plates.
(b) Remove the center pillar lower garnish.
(c) Remove the front seat outer belt (see page BO−133).
(d) Loosen the body side hinge nuts to adjust.
Torque: 23 N·m (230 kgf·cm, 17 ft·lbf)
(e) Install the front seat outer belt and center pillar lower garnish (see page BO−133).
(f) Install the front and rear door scuff plates.

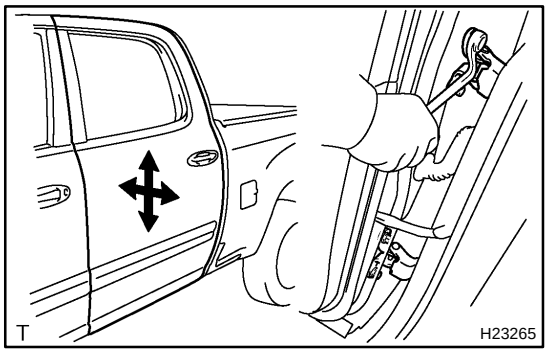

2. ADJUST DOOR IN LEFT/RIGHT AND VERTICAL DIRECTIONS

Loosen the door side hinge bolts to adjust.
Torque: 23 N·m (230 kgf·cm, 17 ft·lbf)

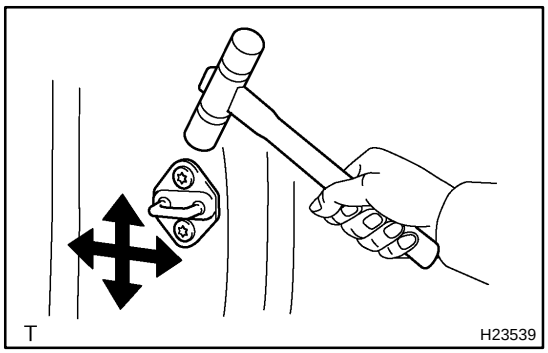

3. ADJUST DOOR LOCK STRIKER

(a) Check that the door fit and door lock linkages are adjusted correctly.
(b) Loosen the striker mounting screws to adjust.
Torque: 23 N·m (230 kgf·cm, 17 ft·lbf)
(c) Using a plastic hammer, tap the striker to adjust it.

REAR DOOR (Double Cab)

BO4PU−01

COMPONENTS

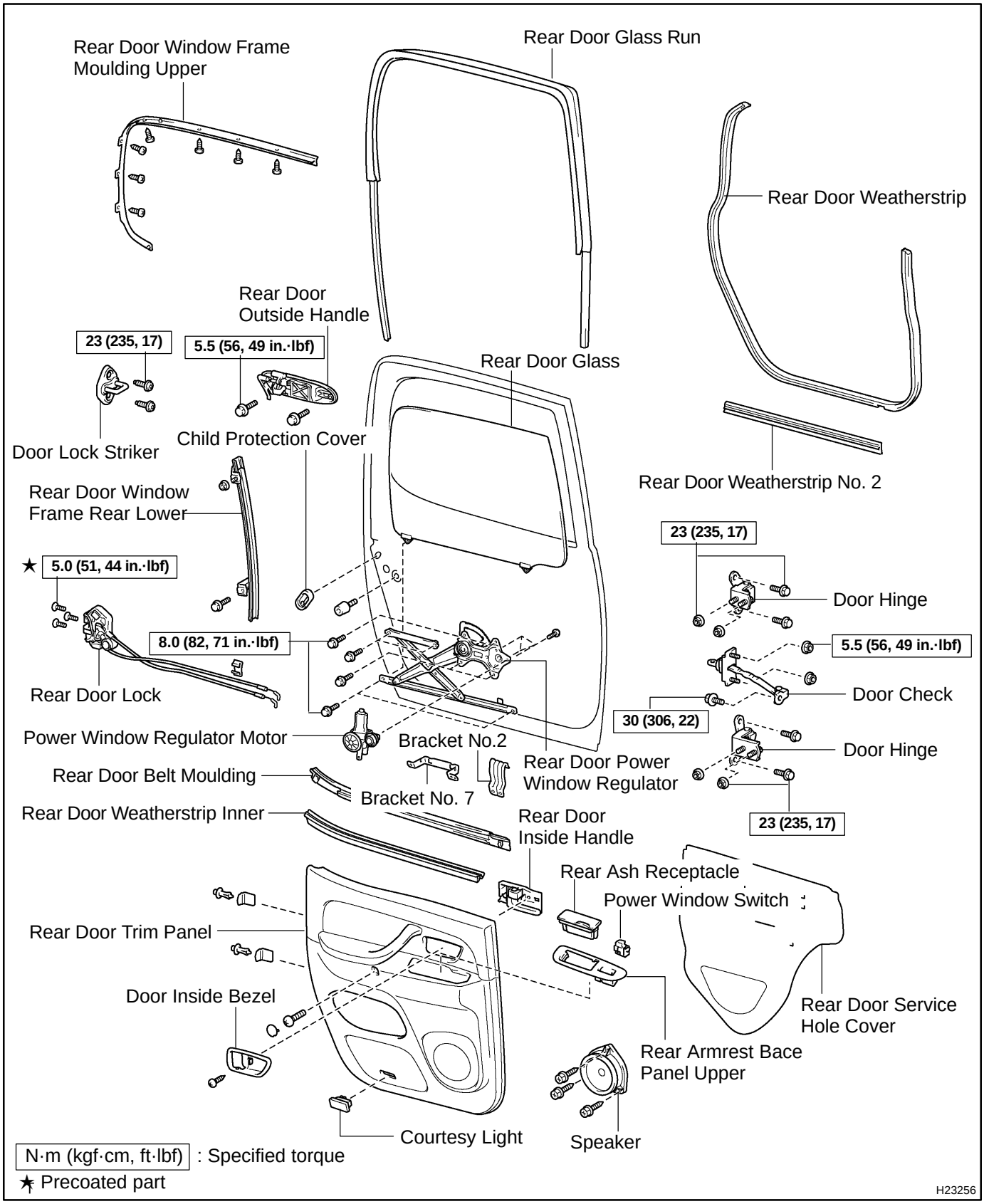

BO4PV−02

DISASSEMBLY

HINT:

A bolt without a torque specification is shown in the standard bolt chart (see page SS−2).

1. REMOVE DOOR INSIDE BEZEL

(a) Using a screwdriver, open the cover.

HINT:

Tape the screwdriver tip before use.

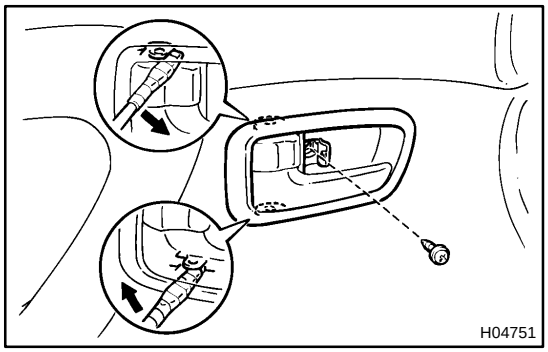

(b) Remove the screw.

(c) Using a screwdriver, remove the door inside bezel, as shown in the illustration.

HINT:

Tape the screwdriver tip before use.

2. REMOVE COURTESY LIGHT

3. REMOVE REAR ARMREST BASE PANEL UPPER

(a) Remove the rear ash receptacle.

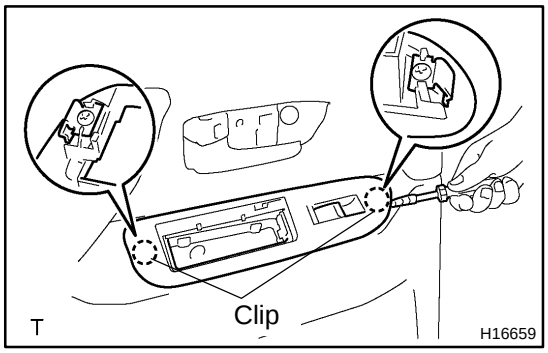

(b) Using a screwdriver, remove the rear armrest base panel upper together with the power window switch.

HINT:

Tape the screwdriver tip before use.

(c) Disconnect the connector.

(d) Remove the power window switch from the rear armrest base panel upper.

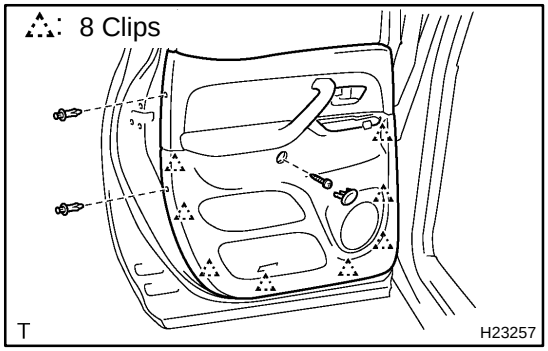

4. REMOVE REAR DOOR TRIM PANEL

(a) Using a screwdriver, remove the cap.

HINT:

Tape the screwdriver tip before use.

(b) Remove the screw and 2 clips.

(c) Insert a screwdriver between the rear door trim panel and door panel to remove the rear door trim panel.

HINT:

Tape the screwdriver tip before use.

(d) Pull the rear door trim panel upward to remove the rear door trim panel.

(e) Remove the rear door weatherstrip inner from the rear door trim panel.

5. REMOVE SPEAKER

(a) Disconnect the connector.

(b) Remove the 3 screws and speaker.

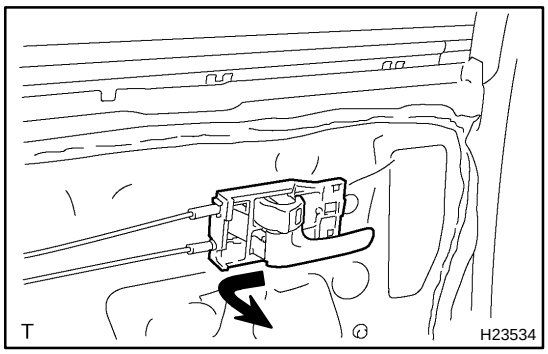

6. REMOVE REAR DOOR INSIDE HANDLE

(a) Slide the rear door inside handle backward to remove it.

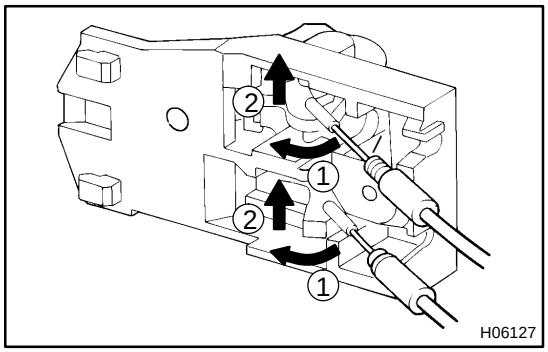

(b) Disconnect the 2 cables from the rear door inside handle, as shown in the illustration.

7. REMOVE REAR DOOR SERVICE HOLE COVER

(a) Using a clip remover, remove the clamp and grommets.

(b) Remove the rear door service hole cover.

NOTICE:

Do not tear the rear door service hole cover.

8. REMOVE REAR DOOR GLASS

(a) Open the rear door glass until the bolts appear in the service hole.

(b) Remove the 2 bolts.

NOTICE:

Do not damage the door glass.

(c) Pull the rear door glass upward to remove it.

9. REMOVE REAR DOOR GLASS RUN

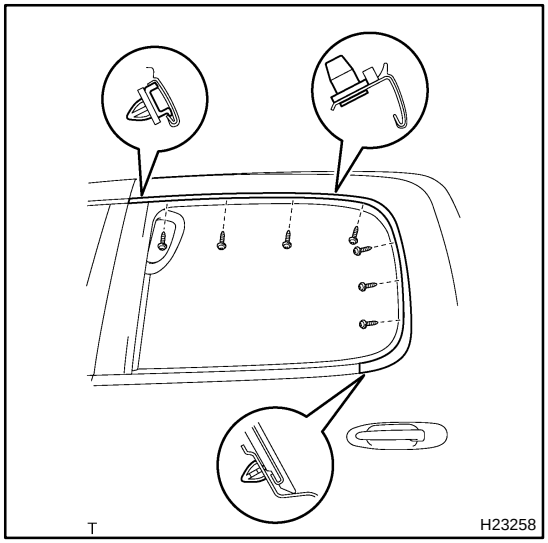

10. REMOVE REAR DOOR WINDOW FRAME MOULDING UPPER

(a) Remove the 7 screws.

(b) Using a screwdriver or clip remover, remove the rear door window frame moulding upper.

HINT:

Tape the screwdriver tip before use.

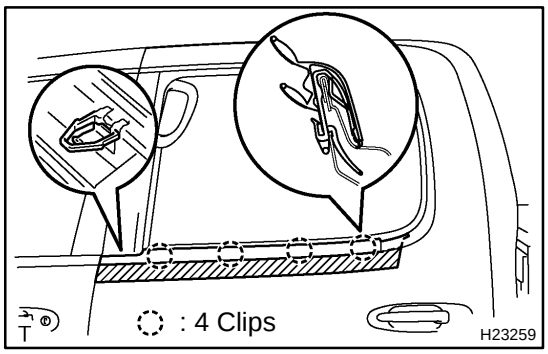

11. REMOVE REAR DOOR BELT MOULDING

(a) Apply protective tape to the outer surface, as shown in the illustration, to prevent the vehicle surface from being scratched.

(b) Using a moulding remover, remove the rear door belt moulding.

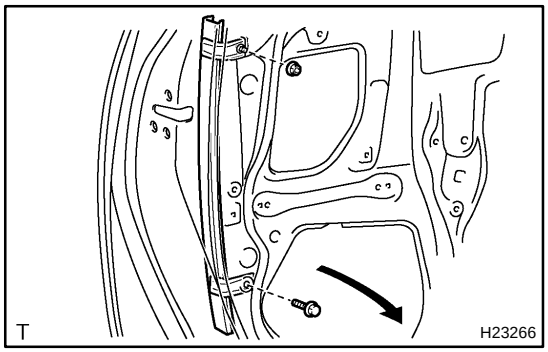

12. REMOVE REAR DOOR WINDOW FRAME REAR LOWER

Remove the bolt, nut and rear door window frame rear lower, as shown in the illustration.

HINT:

Remove the rear door window frame rear lower through the service hole.

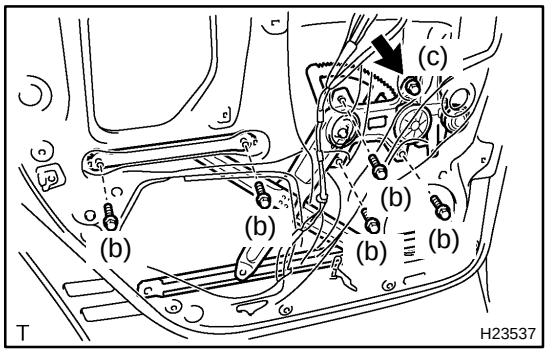

13. REMOVE REAR DOOR POWER WINDOW REGULATOR

(a) Disconnect the connector.

(b) Remove the 5 bolts.

(c) Loosen the bolt, and remove the rear door power window regulator.

HINT:

Remove the rear door power window regulator through the service hole.

(d) Remove the 3 screws and power window regulator motor from the rear door power window regulator.

14. REMOVE REAR DOOR LOCK

(a) Disconnect the 2 control cables from the clamp.

(b) Remove the clamp.

(c) Disconnect the connector.

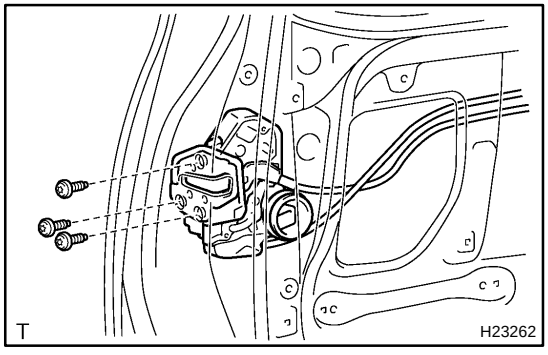

(d) Using a torx® socket wrench, remove the 3 torx® screws.
Torx® socket wrench:
T30 (Part No. 09042−00010 or locally manufactured tool)

(e) Remove the rear door lock.

HINT:

Remove the rear door lock through the service hole.

15. REMOVE REAR DOOR OUTSIDE HANDLE

Remove the 2 bolts and rear door outside handle.

16. REMOVE REAR DOOR WEATHERSTRIP

Using a clip remover, remove the rear door weatherstrip.

17. REMOVE REAR DOOR WEATHERSTRIP NO. 2

BO4PX−02

REASSEMBLY

1. INSTALL REAR DOOR WEATHERSTRIP NO. 2

2. INSTALL REAR DOOR WEATHERSTRIP

3. INSTALL REAR DOOR OUTSIDE HANDLE

Torque: 5.5 N·m (56 kgf·cm, 49 in.·lbf)

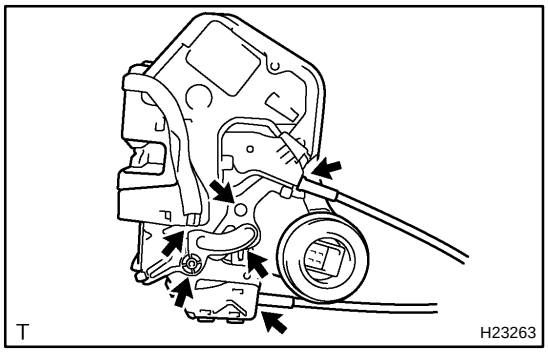

4. INSTALL REAR DOOR LOCK

HINT:

Apply MP grease to the sliding and rotating parts of the front door lock.

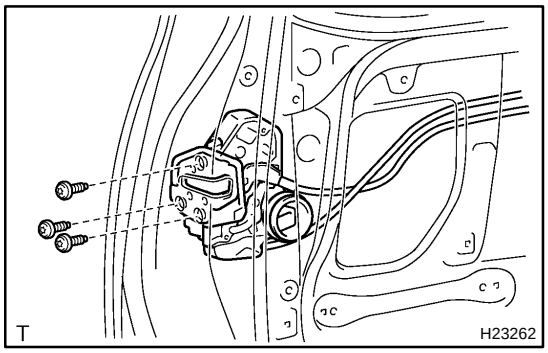

(a) Using a torx® socket wrench, install the rear door lock with the 3 torx® screws.

Torx® socket wrench:

T30 (Part No. 09042−00010 or locally manufactured tool)

Torque: 5 N·m (51 kgf·cm, 44 in.·lbf)

HINT:

Apply adhesive to the 3 screws.

Adhesive: Part No. 08833−00070, THREE BOND 1324 or equivalent.

(b) Connect the connector.

(c) Install the clamp.

(d) Connect the 2 control cables to the clamp.

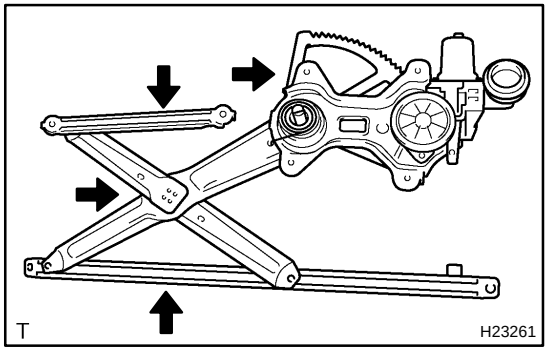

5. INSTALL REAR DOOR POWER WINDOW REGULATOR

HINT:

Apply MP grease to the rear door power window regulator.

(a) Install the power window regulator motor to the rear door power window regulator with the 3 screws.

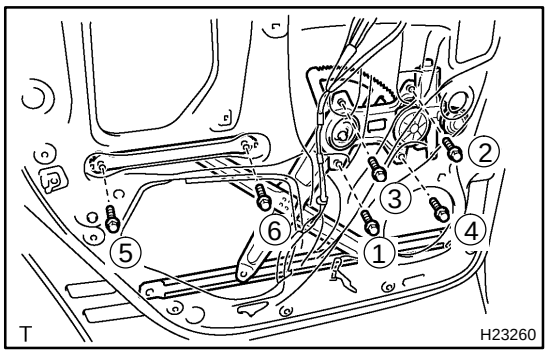

(b) Install the rear door power window regulator with the 6 bolts.
Torque: 8.0 N·m (82 kgf·cm, 71 in.·lbf)

HINT:
Tighten the 6 bolts in the order shown in the illustration.

(c) Connect the connector.

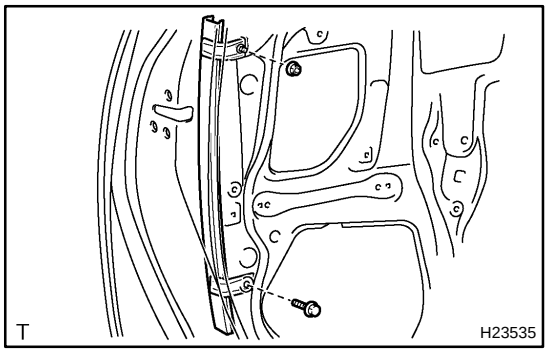

6. INSTALL REAR DOOR WINDOW FRAME REAR LOWER
7. INSTALL REAR DOOR BELT MOULDING
8. INSTALL REAR DOOR WINDOW FRAME MOULDING UPPER
9. INSTALL REAR DOOR GLASS RUN
10. INSTALL REAR DOOR GLASS
Torque: 8.0 N·m (82 kgf·cm, 71 in.·lbf)

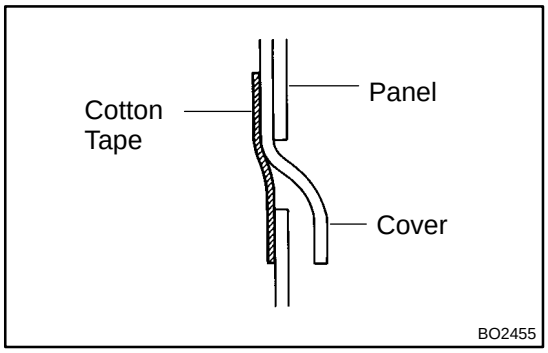

11. INSTALL REAR DOOR SERVICE HOLE COVER

(a) Install the service hole cover.

HINT:

- When installing the service hole cover, pull out the cables and connectors through the service hole cover.
- There should be no wrinkles or folds after attaching the service hole cover.
- After attaching the service hole cover, confirm the sealing condition.

(b) Connect the clamps and connector.

12. INSTALL REAR DOOR INSIDE HANDLE

(a) Connect the 2 cables to the inside handle.

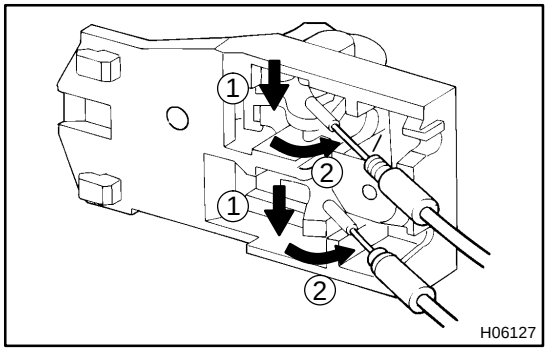

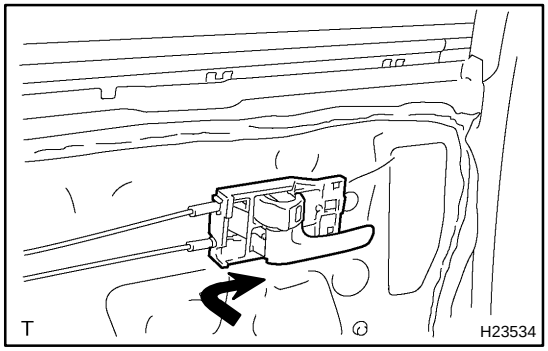

(b) Slide the inside handle forward to install it.

(c) Install the screw.

13. INSTALL SPEAKER
14. INSTALL REAR DOOR TRIM PANEL
15. INSTALL REAR ARMREST BACE PANEL UPPER
16. INSTALL COURTESY LIGHT
17. INSTALL DOOR INSIDE BEZEL

REAR SEAT (Bench Type)

BO2FY−04

COMPONENTS

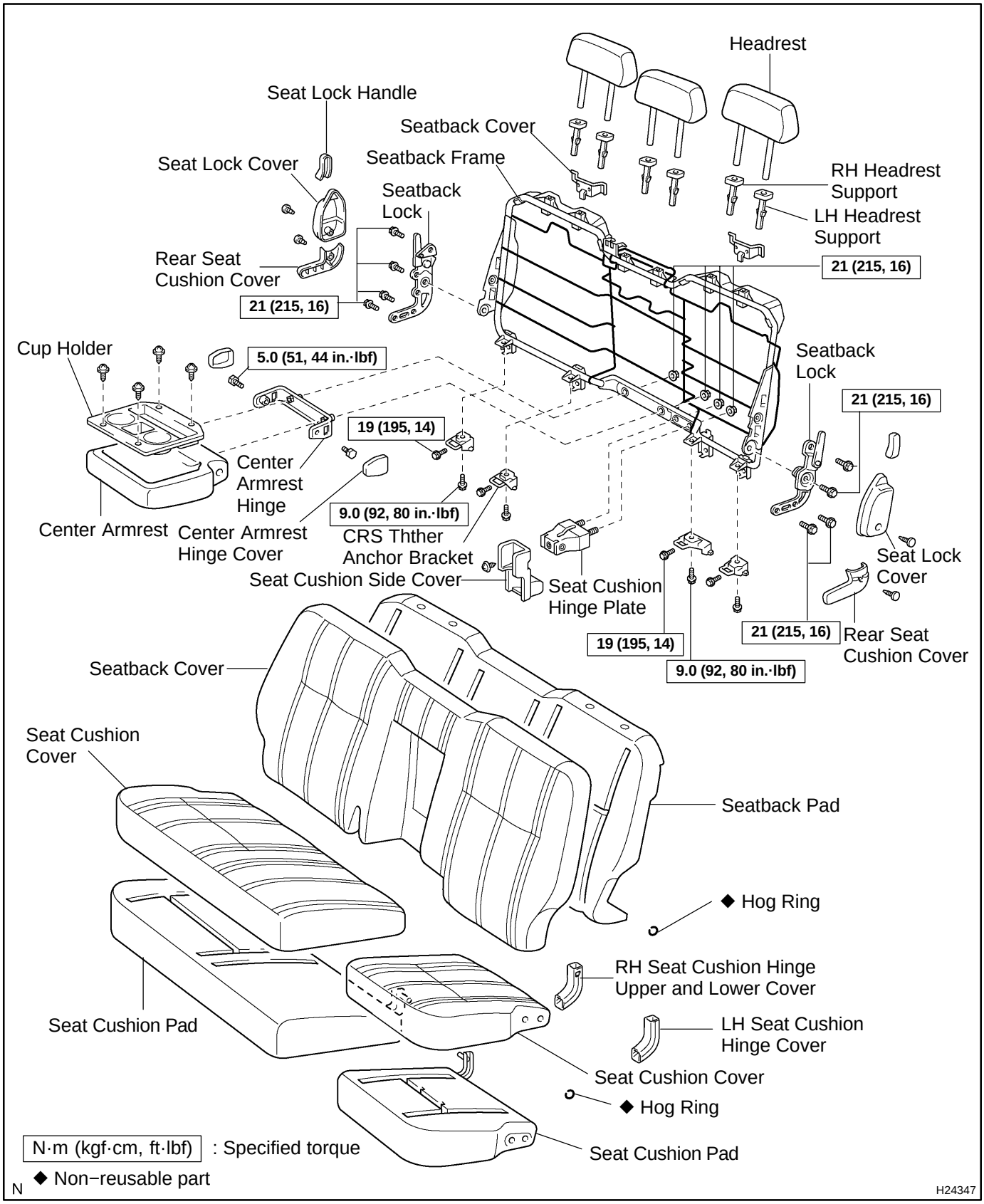

BO2G0−03

DISASSEMBLY

CAUTION:

Wear safety gloves, because the sharp edges and surfaces of the seat frame may cause injury to the hands.

HINT:

Tape the screwdriver tip before using it to remove the parts.

1. REMOVE HEADRESTS

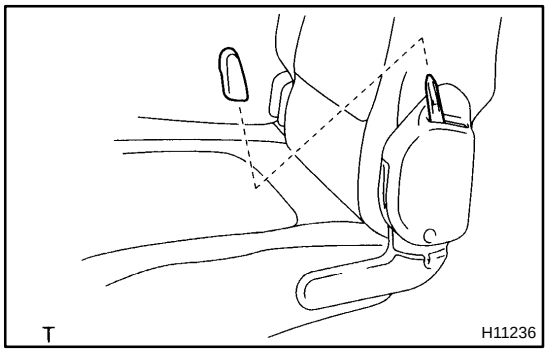

2. REMOVE REAR SEAT LOCK HANDLE

(a) Using a screwdriver, remove the rear seat lock handle.

HINT:

Tape the screwdriver tip before use.

(b) Perform the same procedure on the other side.

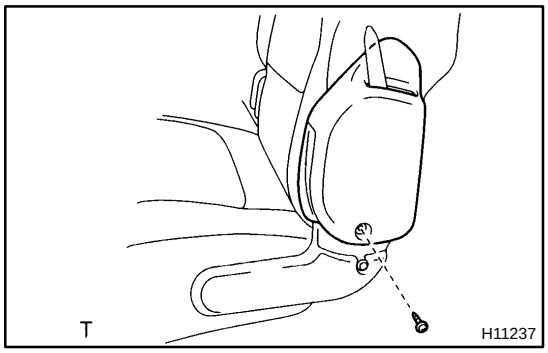

3. REMOVE REAR SEAT LOCK COVER

(a) Remove the screw and rear seat lock cover.

(b) Perform the same procedure on the other side.

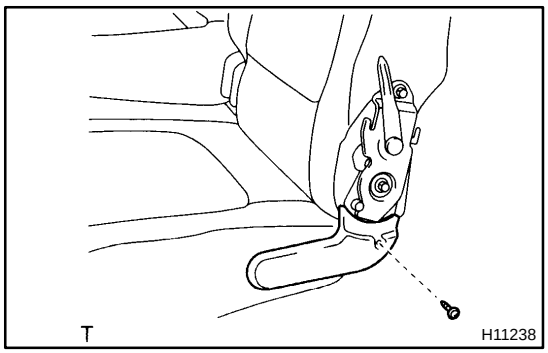

4. REMOVE REAR SEAT CUSHION COVER

(a) Remove the screw and rear seat cushion cover.

(b) Perform the same procedure on the other side.

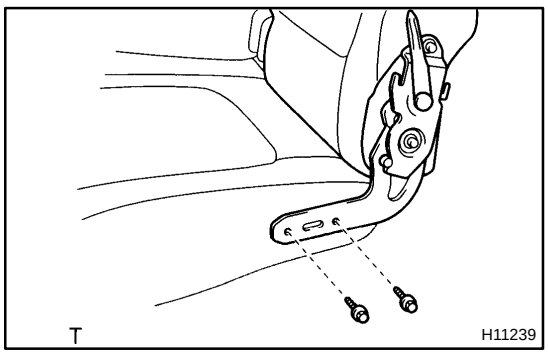

5. REMOVE SEAT CUSHION ASSEMBLY

(a) Remove the 2 bolts.

(b) Remove the seat cushion assembly front the seat cushion hinge plate.

(c) Perform the same procedure on the other side.

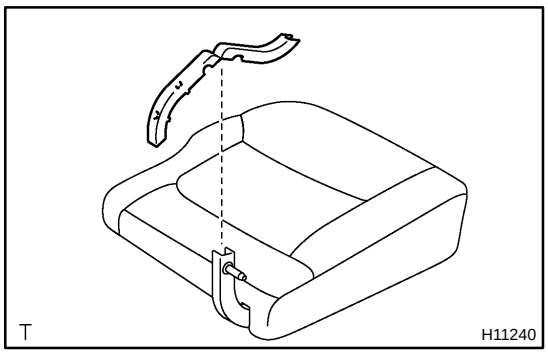

6. REMOVE LH SEAT CUSHION HINGE COVER

Using a screwdriver, remove the LH seat cushion hinge cover.

HINT:

Tape the screwdriver tip before use.

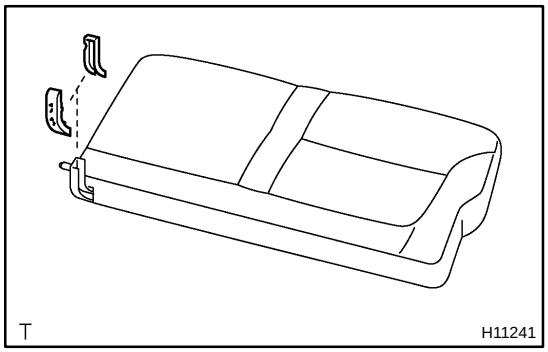

7. REMOVE RH SEAT CUSHION HINGE UPPER AND LOWER COVERS

Using a screwdriver, remove the RH seat cushion hinge upper and lower covers.

HINT:

Tape the screwdriver tip before use.

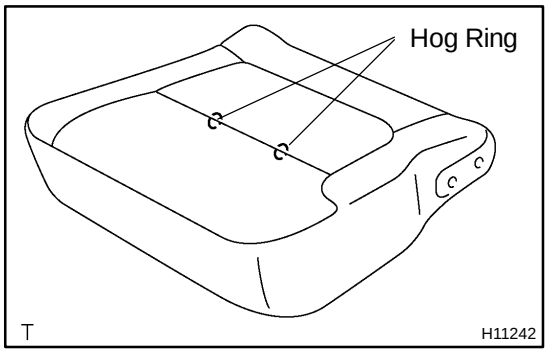

8. REMOVE SEAT CUSHION COVER

(a) Open the fastener.

(b) Remove the hog rings and seat cushion cover.

(c) Perform the same procedure on the other side.

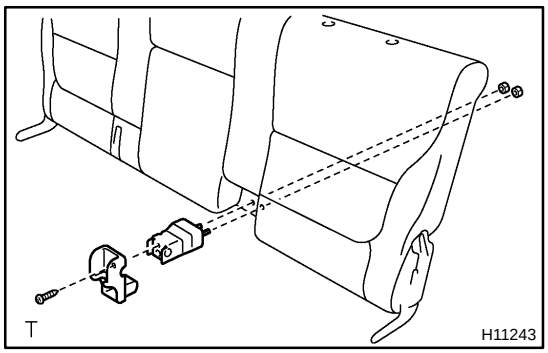

9. REMOVE SEAT CUSHION SIDE COVER

Remove the screw and seat cushion side cover.

10. REMOVE SEAT CUSHION HINGE PLATE

Remove the 2 nuts and seat cushion hinge plate from the seatback frame.

11. REMOVE SEATBACK ASSEMBLY

Remove the 4 bolts and seatback assembly.

12. REMOVE 4 CRS TETHER ANCHOR BRACKETS

(a) Remove the bolt and CRS tether anchor bracket.

(b) Perform the same procedure on the other CRS tether anchors.

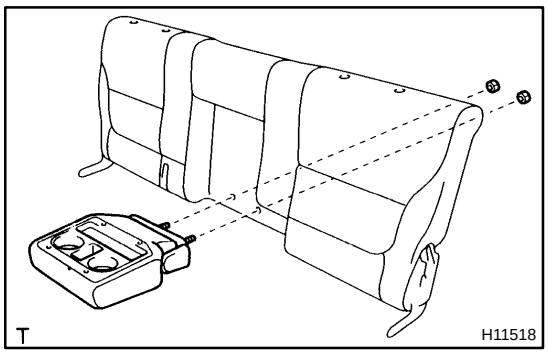

13. REMOVE CENTER ARMREST

Remove the 2 nuts and center armrest from the seatback assembly.

14. REMOVE CUP HOLDER

Remove the 4 screws and cup holder from the center armrest.

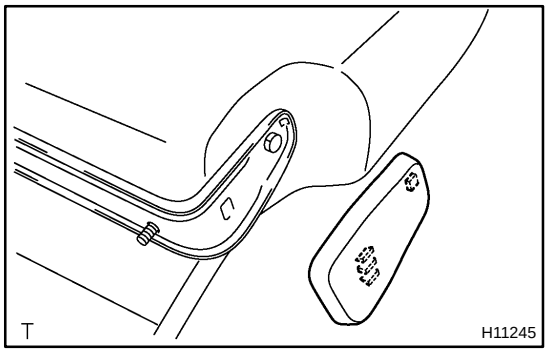

15. REMOVE CENTER ARMREST HINGE

(a) Using a screwdriver, remove the center armrest hinge cover.

HINT:

Tape the screwdriver tip before use.

(b) Perform the same procedure on the other side.

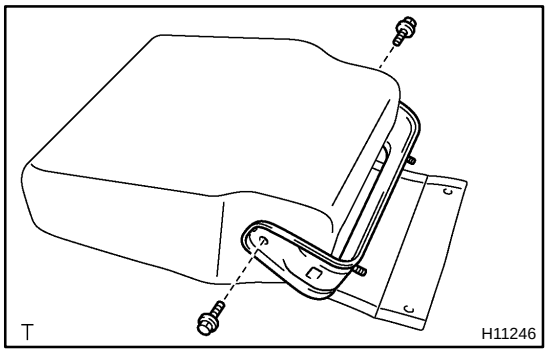

(c) Remove the 2 bolts and center armrest hinge.

16. REMOVE HEADREST SUPPORTS

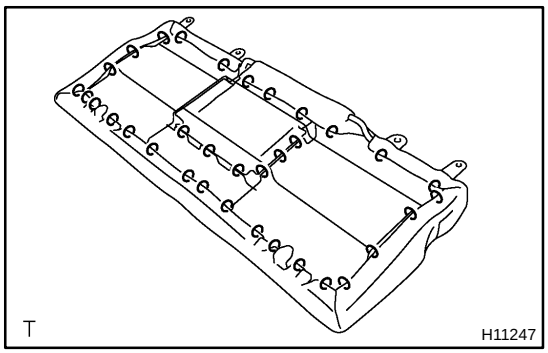

17. REMOVE SEATBACK COVER

(a) Remove the hog rings from the rear side of the seatback assembly.

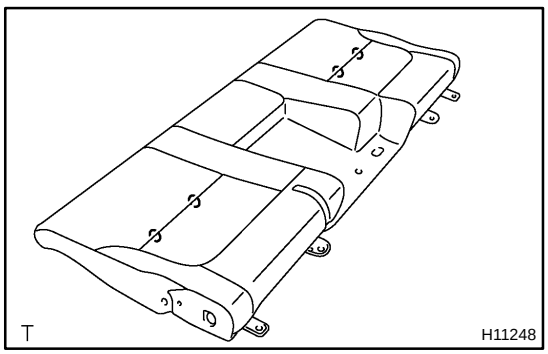

(b) Remove the hog rings and seatback cover.

BO2G2−04

INSTALLATION

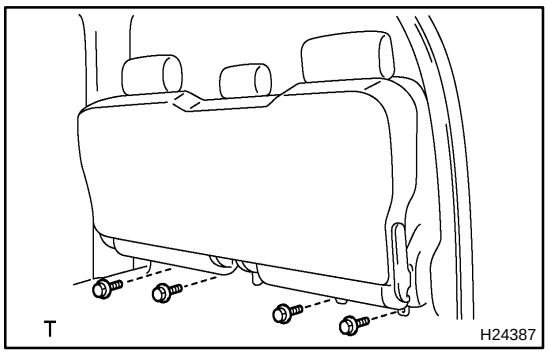

HINT:

A bolt without a torque specification is shown in the standard bolt chart (see page SS−2).

INSTALL REAR SEAT

(a) Hook the rear seat to the body panel.

(b) Install the 4 bolts.

Torque: 19 N·m (195 kgf·cm, 14 ft·lbf)

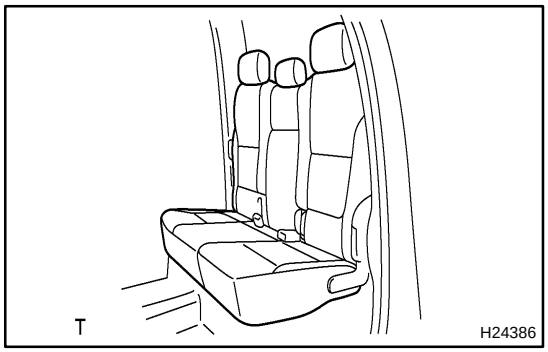

(c) Release the rear seat lock and swing down the seat cushions.

HINT:

Before swinging down the seat cushion, store the inner belts in the rear seat.

BO2G1−05

REASSEMBLY

CAUTION:

Wear safety gloves, because the sharp edges and surfaces of the seat frame may cause injury to the hands.

HINT:

A bolt without a torque specification is shown in the standard bolt chart (see page SS−2).

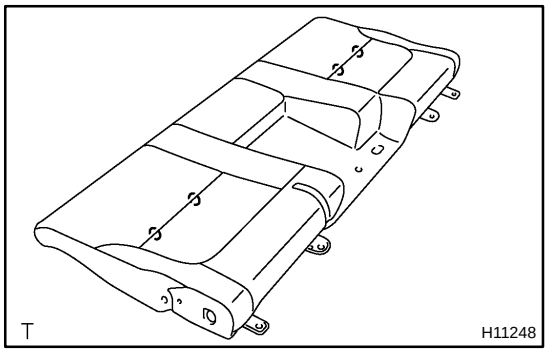

1. INSTALL SEATBACK COVER

(a) Install the seatback cover with new hog rings.

HINT:

When installing the hog rings, take as much care as possible to prevent wrinkles.

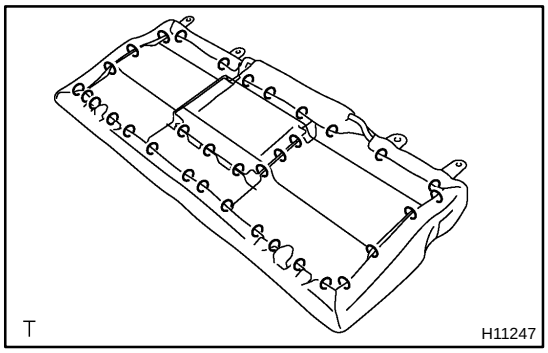

(b) Install the new hog rings to the rear side of the seatback assembly.

HINT:

When installing the hog rings, take as much care as possible to prevent wrinkles.

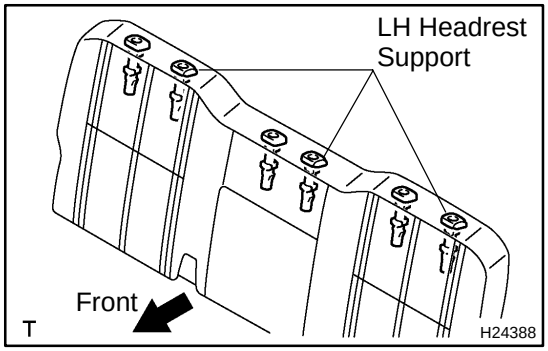

2. INSTALL HEADREST SUPPORTS

HINT:

Ensure that the button of the 3 LH headrest supports is installed to the left.

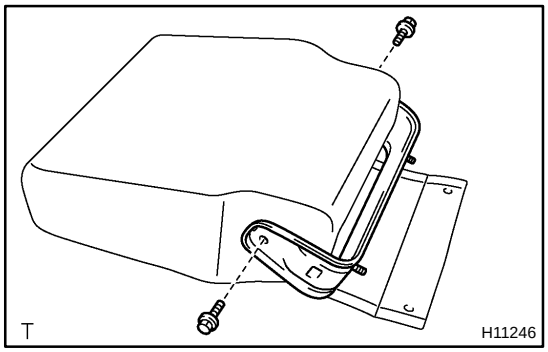

3. INSTALL CENTER ARMREST HINGE

(a) Install the center armrest hinge with the 2 bolts.

Torque: 5.0 N·m (51 kgf·cm, 44 in.·lbf)

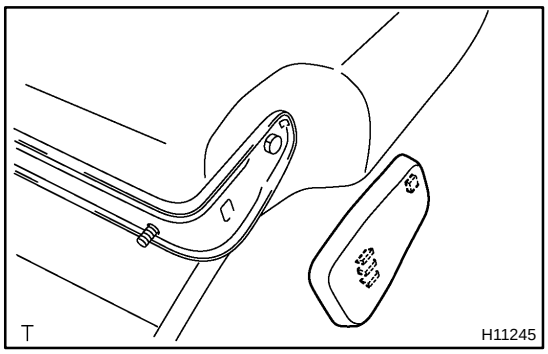

(b) Install the center armrest hinge cover as shown in the illustration, then perform the same procedure on the other side.

4. INSTALL CUP HOLDER

Install the cup holder with the 4 screws to the center armrest.

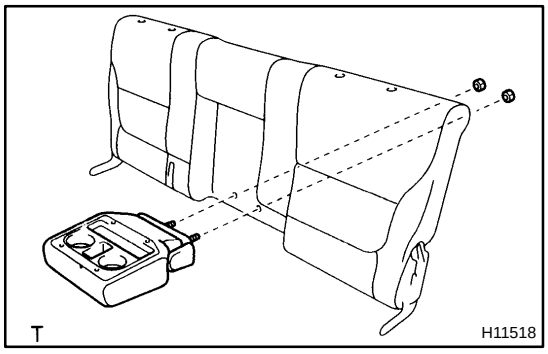

5. INSTALL CENTER ARMREST

Install the center armrest with the 2 nuts to the seatback assembly.

Torque: 21 N·m (215 kgf·cm, 16 ft·lbf)

6. INSTALL 4 CRS TETHER ANCHOR BRACKETS

(a) Install the CRS tether anchor bracket with the bolt.

Torque: 9.0 N·m (92 kgf·cm, 80 in.·lbf)

(b) Perform the same procedure on the other CRS tether anchors.

7. INSTALL SEATBACK ASSEMBLY

Install the seatback assembly with the 4 bolts.

Torque: 21 N·m (215 kgf·cm, 16 ft·lbf)

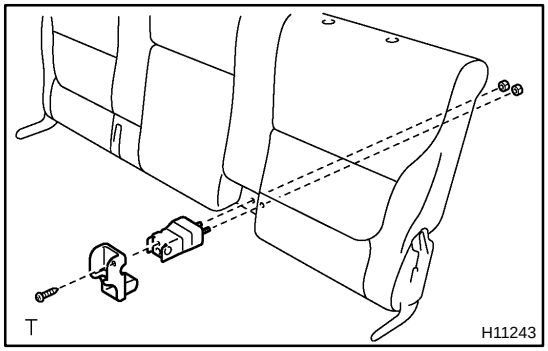

8. INSTALL SEAT CUSHION HINGE PLATE

Install the seat cushion hinge plate with the 2 nuts to the seatback frame.

Torque: 21 N·m (215 kgf·cm, 16 ft·lbf)

9. INSTALL SEAT CUSHION SIDE COVER

Install the seat cushion side cover with the screw.

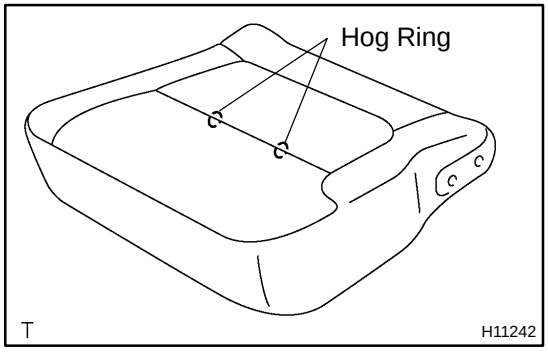

10. INSTALL SEAT CUSHION COVER

(a) Install the seat cushion cover with new hog rings.

HINT:

When installing the hog rings, take as much care as possible to prevent wrinkles.

(b) Close the fastener.

(c) Perform the same procedure on the other side.

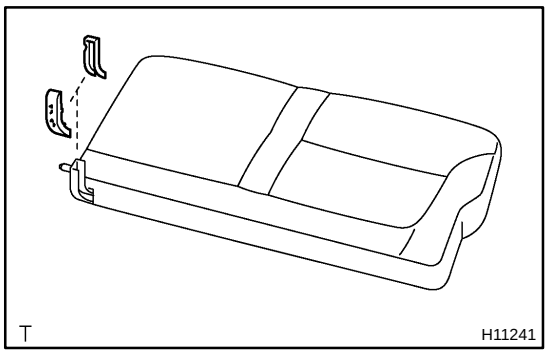

11. INSTALL RH SEAT CUSHION HINGE UPPER AND LOWER COVERS

Install the RH seat cushion hinge upper and lower covers.

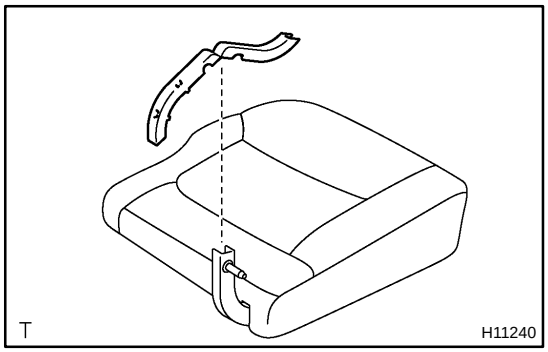

12. INSTALL LH SEAT CUSHION HINGE COVER

Install the LH seat cushion hinge cover.

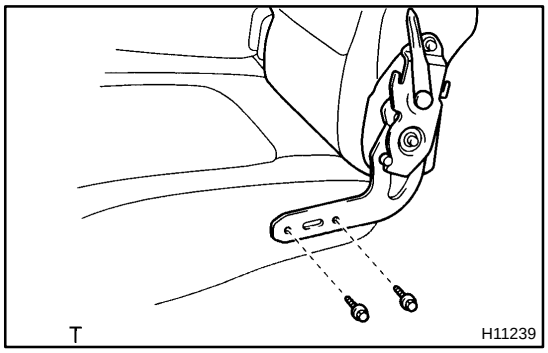

13. INSTALL SEAT CUSHION ASSEMBLY

(a) Install the seat cushion assembly to the seat cushion hinge plate.

(b) Install the seat cushion assembly to the seatback lock with the 2 bolts.

Torque: 21 N·m (215 kgf·cm, 16 ft·lbf)

(c) Perform the same procedure on the other side.

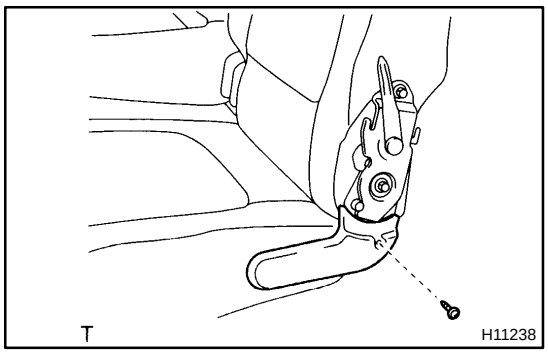

14. INSTALL REAR SEAT CUSHION COVER

(a) Install the rear seat cushion cover with the screw.

(b) Perform the same procedure on the other side.

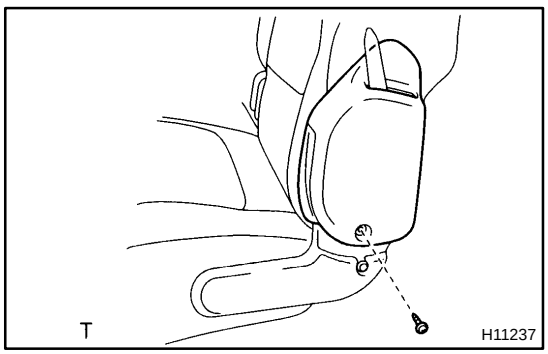

15. INSTALL REAR SEAT LOCK COVER

(a) Install the rear seat lock cover with the screw.

(b) Perform the same procedure on the other side.

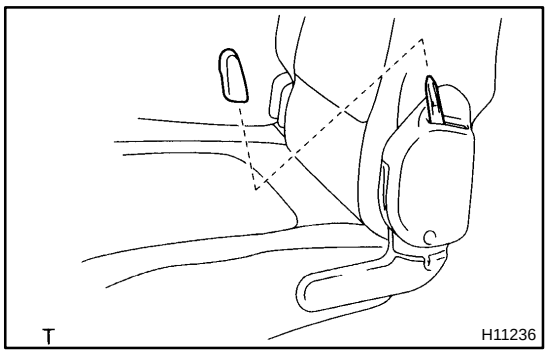

16. INSTALL REAR SEAT LOCK HANDLE

(a) Install the rear seat lock handle.

(b) Perform the same procedure on the other side.

17. INSTALL HEADRESTS

BO2FZ−03

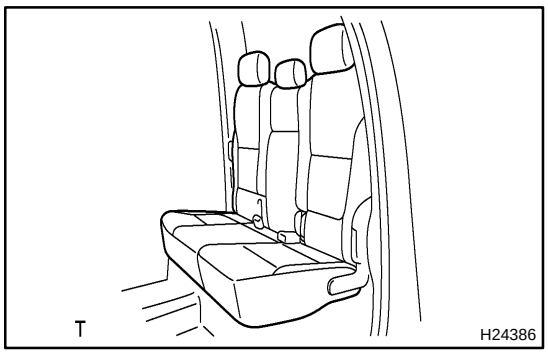

REMOVAL

REMOVE REAR SEAT

(a) Release the rear seat lock and swing the seat cushions up.

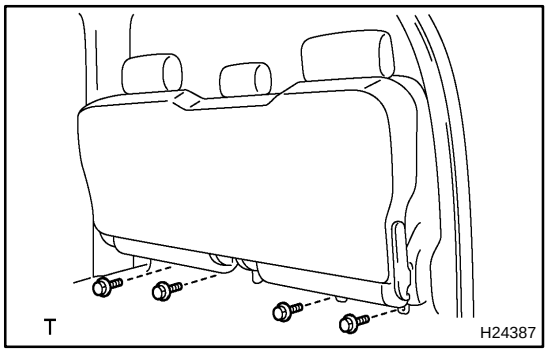

(b) Remove the 4 bolts.
(c) Lift up the rear seat and remove it.

REAR SEAT (LH)

COMPONENTS

BO4R3−02

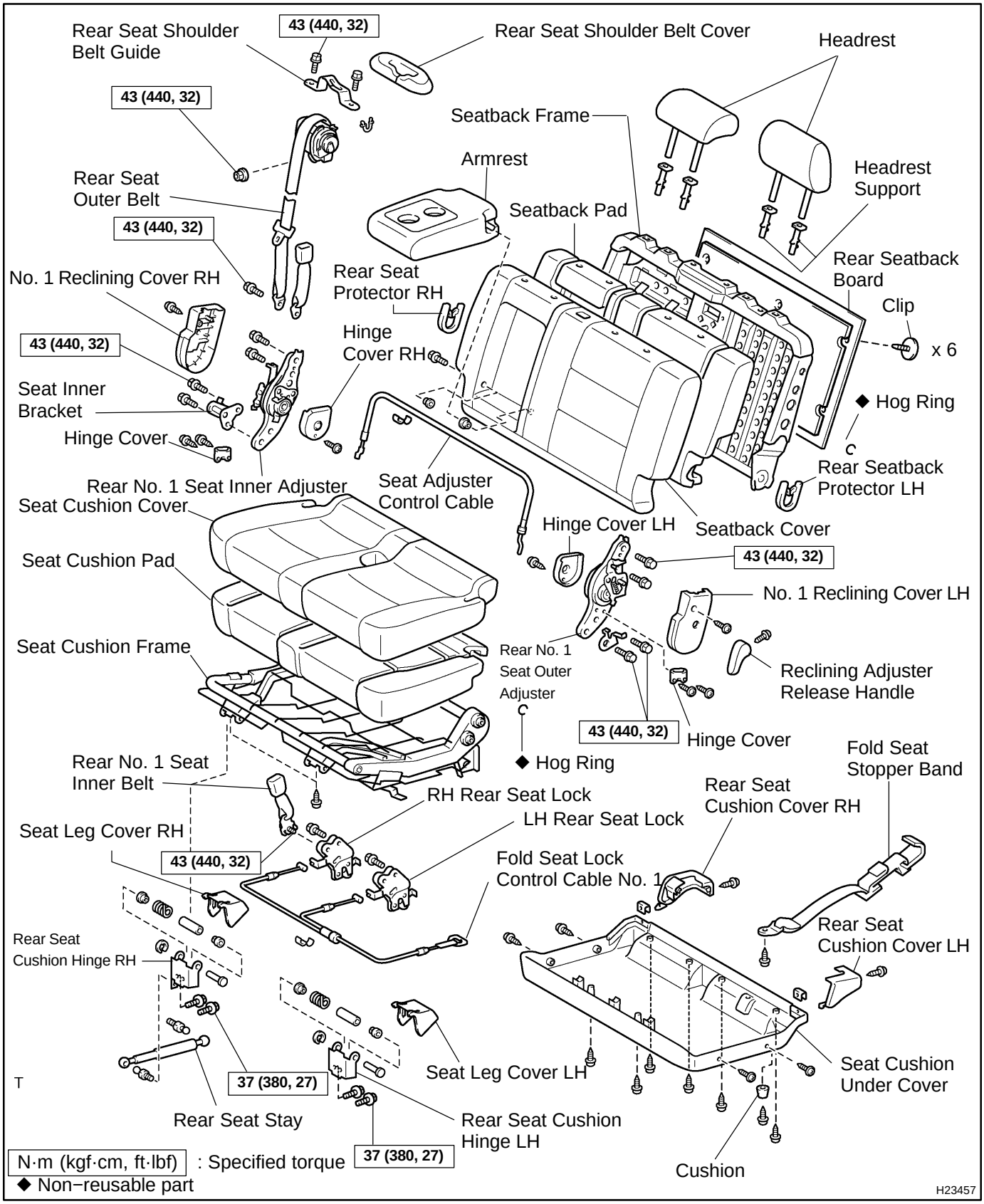

BO4R5−03

DISASSEMBLY

CAUTION:

Wear safety gloves, because the sharp edges and surfaces of the seat frame may cause injury to the hands.

HINT:

- Tape the screwdriver tip before using it to remove the parts.
- A bolt without a torque specification is shown in the standard bolt chart (see page SS−2).

1. REMOVE HEADREST

Remove the 2 headrests.

2. REMOVE RECLINING ADJUSTER RELEASE HANDLE

Remove the screw and release handle.

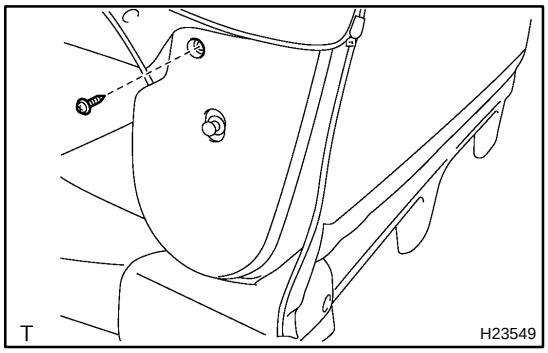

3. REMOVE NO. 1 RECLINING COVER LH

(a) Unzip the seat cushion cover.

(b) Remove the screw and No. 1 rear seat reclining cover.

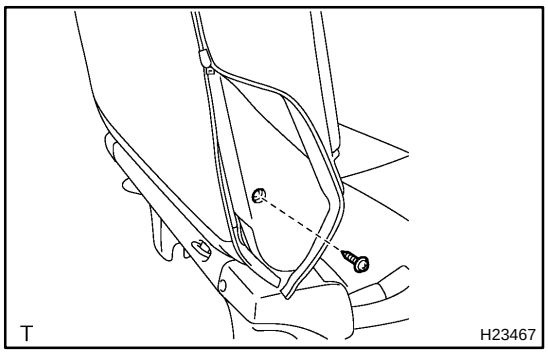

4. REMOVE NO. 1 RECLINING COVER RH

(a) Unzip the seat cushion cover.

(b) Remove the screw and No. 1 rear seat reclining cover.

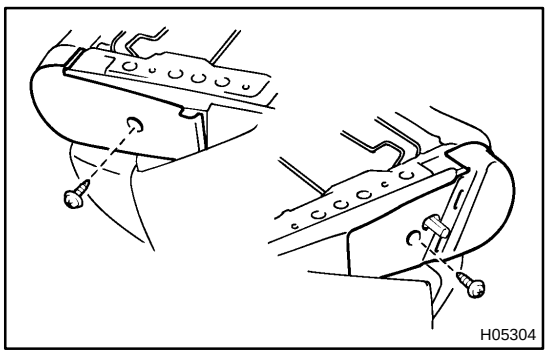

5. REMOVE SEAT CUSHION UNDER COVER (LH AND RH)

(a) Remove the 2 screws and 2 seat cushion under covers.

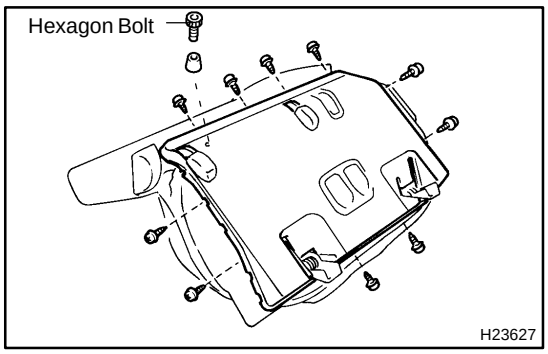

(b) Using a 5 mm hexagon wrench, remove the bolt and cushion.
(c) Remove the 10 screws and seat cushion under cover.

6. REMOVE FOLD SEAT LOCK CONTROL CABLE NO. 1

(a) Tilt the seat forward.
(b) Remove the clamp and fold seat lock control cable as shown in the illustration.

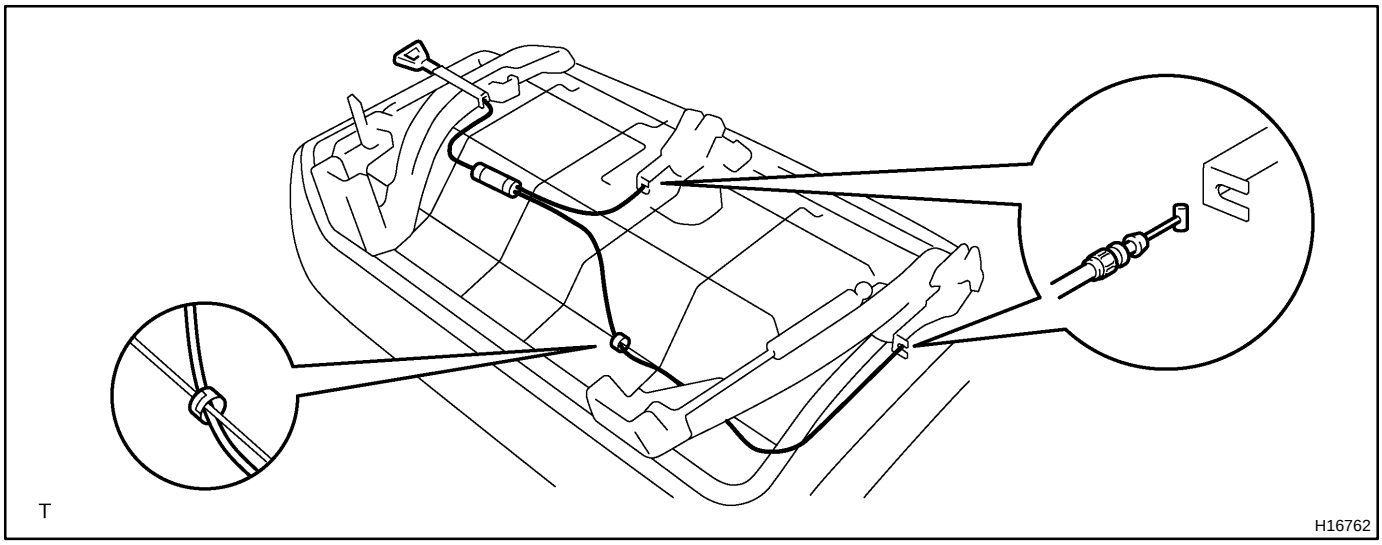

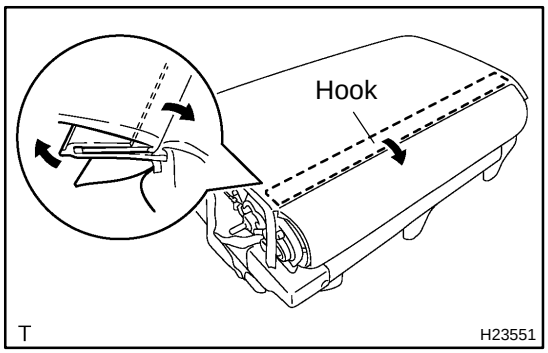

7. REMOVE SEATBACK ASSEMBLY

(a) As shown in the illustration, disengage the hook and open the seatback cover.

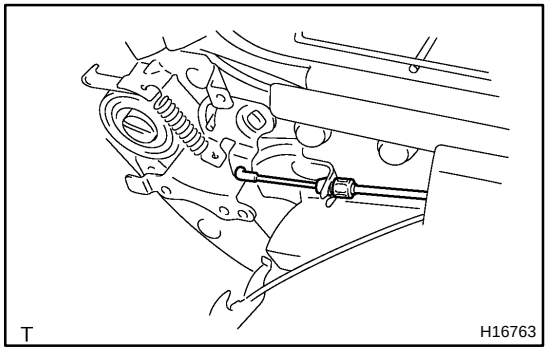

(b) Remove the reclining connecting wire of the LH side edge.

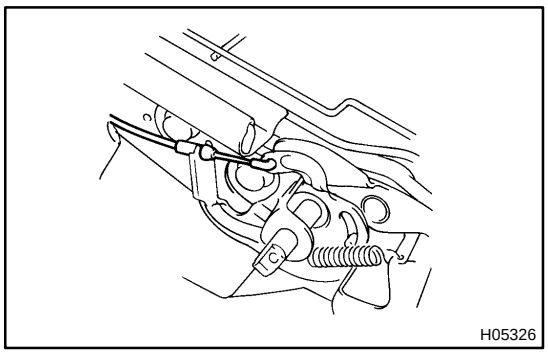

(c) Remove the reclining connecting wire of the RH side edge.
(d) Remove the 4 bolts and the seatback assembly.
Torque: 43 N·m (440 kgf·cm, 32 ft·lbf)

8. REMOVE ARMREST

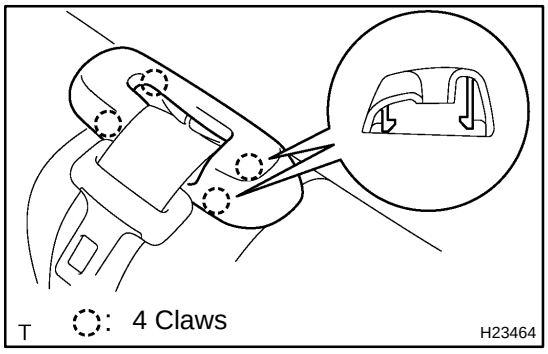

9. REMOVE SEATBACK COVER

(a) Using a screwdriver, disengage the 4 claws and remove the rear seat shoulder belt cover.

HINT:

Tape the screwdriver tip before use.

(b) Remove the 4 headrest supports.
(c) Disengage the hooks, and remove the seatback frame from the seatback cover with pad.
(d) Remove the seatback cover from the seatback pad.
(e) Remove the hog rings and seatback cover.

HINT:

At the time of reassembly, take as much care as possible to minimize wrinkles when installing hog rings.

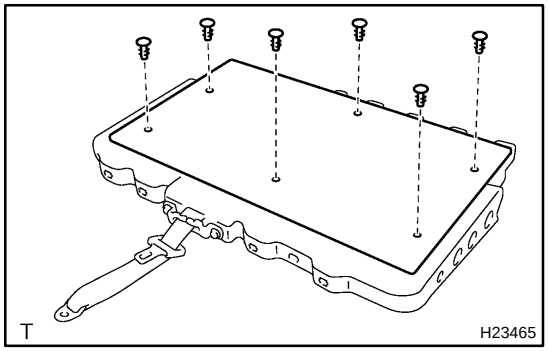

10. REMOVE REAR SEATBACK BOARD

Using a clip remover, remove the 6 clips and seatback board.

11. REMOVE SEAT ADJUSTER CONTROL CABLE

Remove the 2 clamps and seat adjuster control cable.

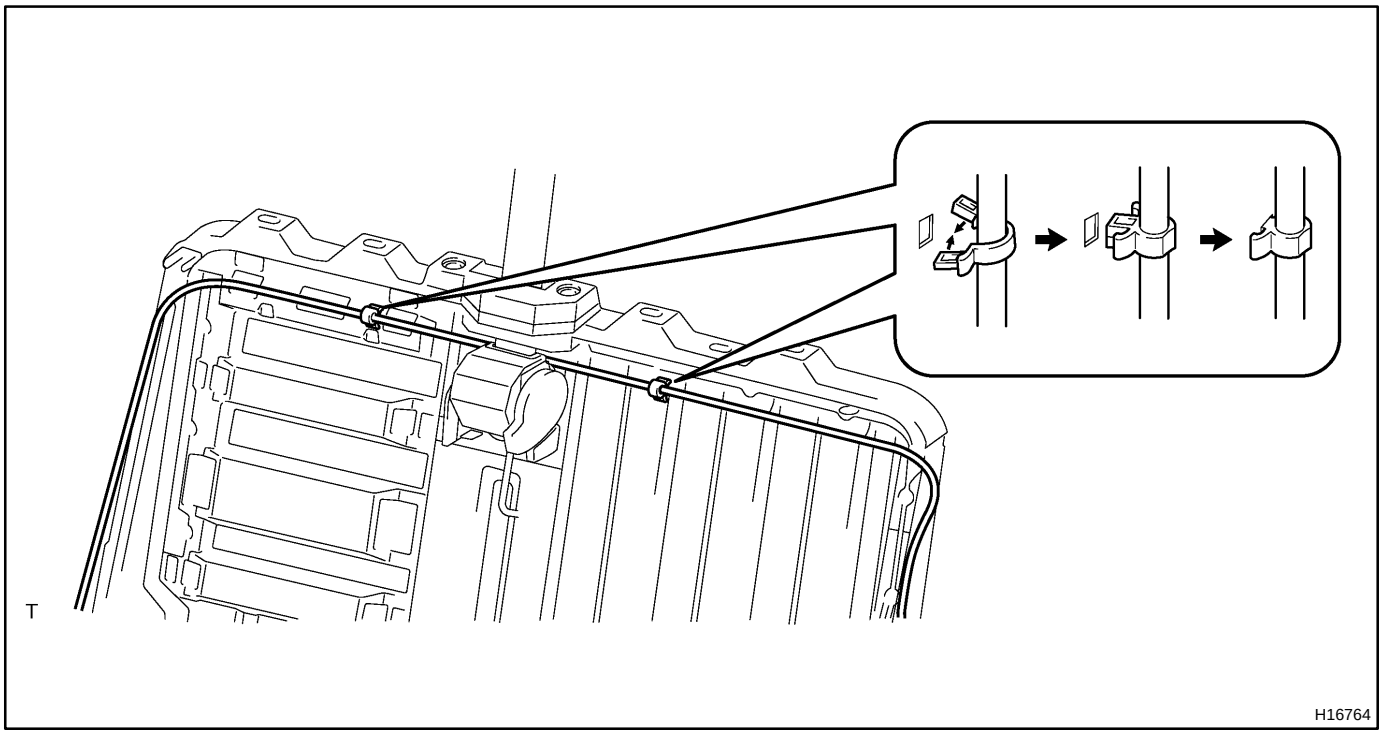

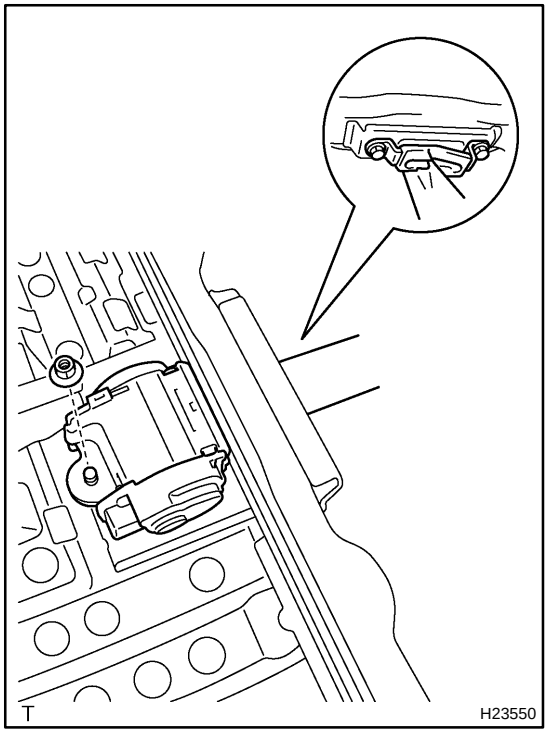

12. REMOVE REAR SEAT OUTER BELT

(a) Remove the 2 bolts and rear seat shoulder belt guide.
Torque: 43 N·m (440 kgf·cm, 32 ft·lbf)

(b) Remove the nut,rear seat outer belt.
Torque: 43 N·m (440 kgf·cm, 32 ft·lbf)

13. REMOVE SEAT CUSHION COVER

(a) Remove the seat cushion cover with pad from the seat cushion frame.

(b) Remove the seat cushion cover from the seat cushion pad.

HINT:

At the time of reassembly, take as much care as possible to minimize wrinkles when installing hog rings.

14. REMOVE REAR NO. 1 SEAT ADJUSTER

(a) Remove the 2 bolts and rear No. 1 seat outer adjuster.
Torque: 43 N·m (440 kgf·cm, 32 ft·lbf)

(b) Remove the 2 bolts and rear No. 1 seat inner adjuster.
Torque: 43 N·m (440 kgf·cm, 32 ft·lbf)

(c) Remove the 4 screws and 2 hinges covers from the rear No. 1 seat outer and inner adjusters.

(d) Remove the 2 screws and 2 reclining inner covers from the rear No. 1 seat outer and inner adjusters.

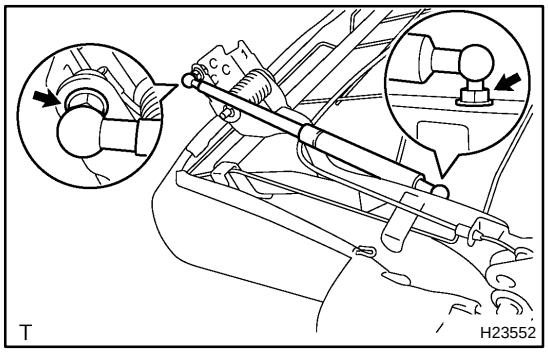

15. REMOVE REAR SEAT STAY

Remove the 2 bolts and rear seat stay.

16. REMOVE REAR SEAT CUSHION HINGE (LH AND RH)

(a) Using a screwdriver, remove the spring nut and E−rings.

(b) Remove the 2 hinge pins, 2 cushion spacers, 2 cushion support springs and 2 rear seat cushion hinges.

17. REMOVE LH REAR SEAT LOCK

Unfasten the bolt, then remove the inner belt and LH rear seat lock.

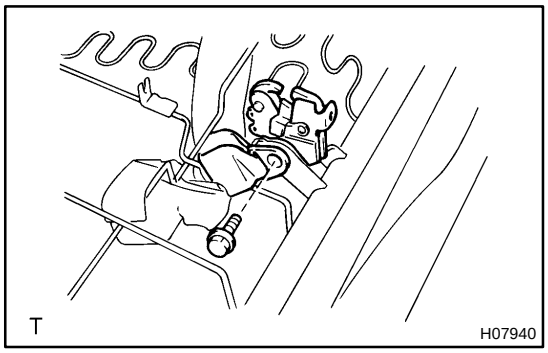

18. REMOVE RH REAR SEAT LOCK

(a) Remove the screw and rear seat lock cover.

(b) Remove the bolt, seat belt anchor and inner belt.
Torque: 43 N·m (440 kgf·cm, 32 ft·lbf)

(c) Remove the RH rear seat lock.

BO4R7−02

INSTALLATION

Installation is in the reverse order of removal (see page BO−213).

BO4R6−02

REASSEMBLY

Reassembly is in the reverse order of disassembly (see page BO−214).

BO4R4−03

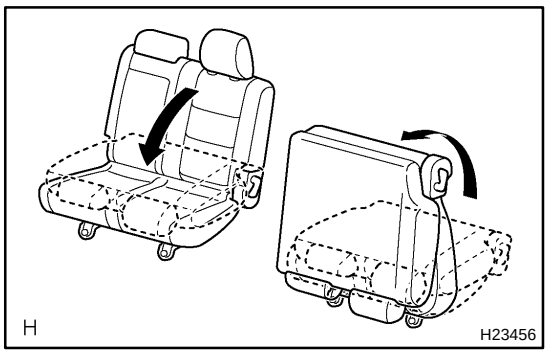

REMOVAL

1. FOLDING REAR SEAT LH

(a) Lower the headrest to the lowest position. Pull the seatback angle adjusting lever and fold the seatback down.

(b) Unlock the seat legs by pulling up one of the lever on the seat legs, and swing the seat up and forward.

2. REMOVE REAR SEAT LH

(a) Using a screwdriver, remove the 2 seat leg covers.

HINT:

Tape the screwdriver tip before use.

(b) Remove the 4 bolts and rear No.1 seat.

Torque: 37 N·m (380 kgf·cm, 27 ft·lbf)

REAR SEAT (RH)

COMPONENTS

BO4R8−03

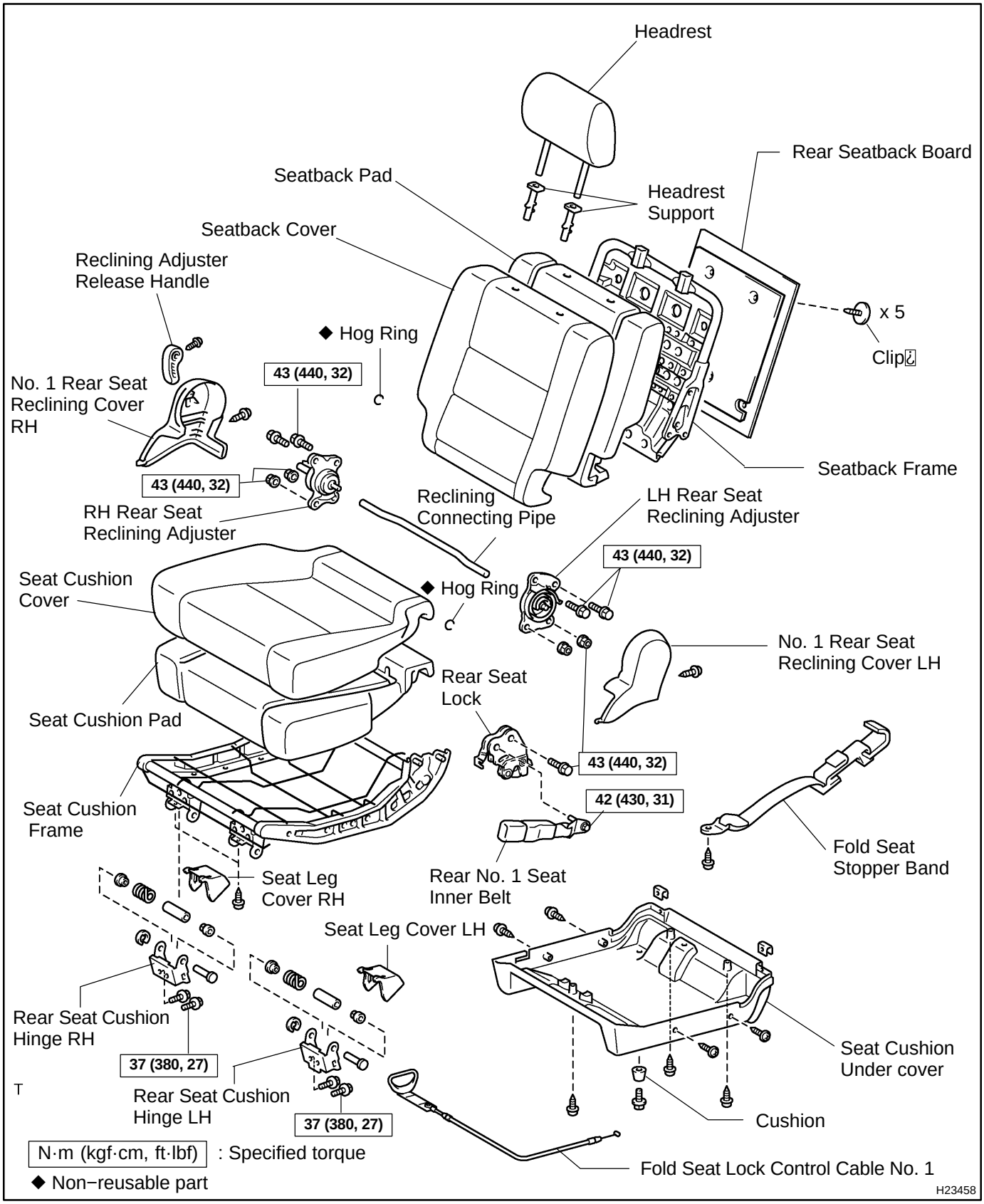

BO4RA−02

DISASSEMBLY

CAUTION:

Wear safety gloves, because the sharp edges and surfaces of the seat frame may cause injury to the hands.

HINT:

- Tape the screwdriver tip before using it to remove the parts.
- A bolt without a torque specification is shown in the standard bolt chart (see page SS−2).

1. REMOVE HEADREST

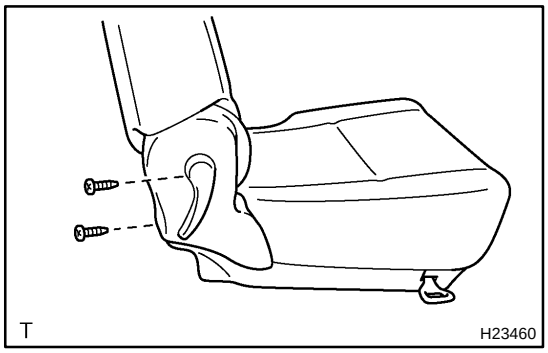

2. REMOVE RECLINING ADJUSTER RELEASE HANDLE

(a) Remove the screw and release handle.

3. REMOVE NO. 1 REAR SEAT RECLINING COVER RH

(a) Remove the screw and No. 1 rear seat reclining cover.

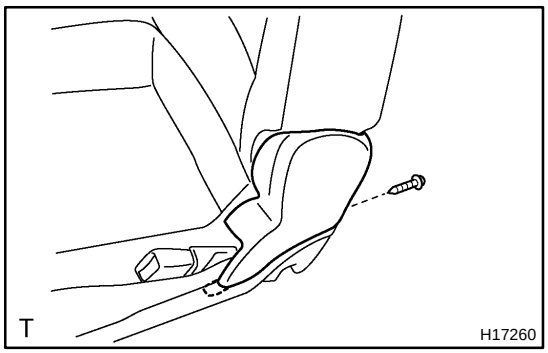

4. REMOVE NO. 1 REAR SEAT RECLINING COVER LH

(a) Remove the screw and No. 1 rear seat reclining cover.

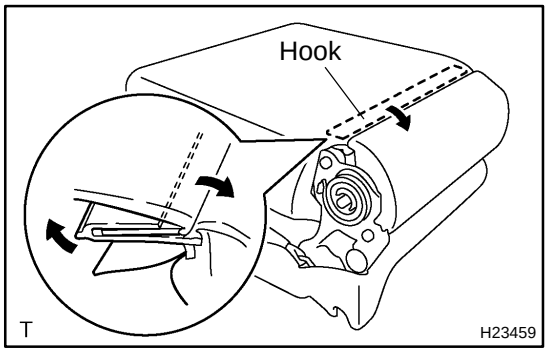

5. REMOVE SEATBACK ASSEMBLY

(a) Tilting the seat forward.

(b) As shown in the illustration, disengage the hook and open the seatback cover.

(c) Remove the 4 bolts and the seatback assembly.

Torque: 43 N·m (440 kgf·cm, 32 ft·lbf)

6. REMOVE SEATBACK COVER

(a) Remove the headrest supports.

(b) Disengage the hooks, and remove the seatback frame from the seatback cover with pad.

(c) Remove the seatback cover from the seatback pad.

HINT:

At the time of reassembly, take as much care as possible to minimize wrinkles when installing hog rings.

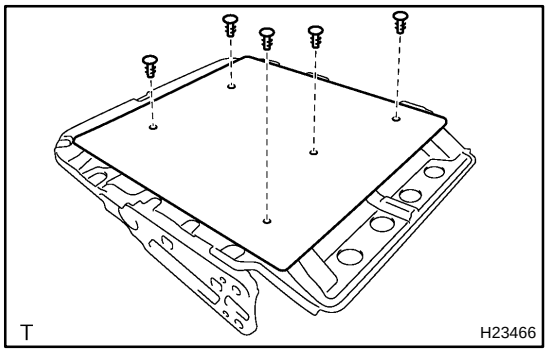

7. REMOVE REAR SEATBACK BOARD

Using a clip remover, remove the 5 clips and seatback board.

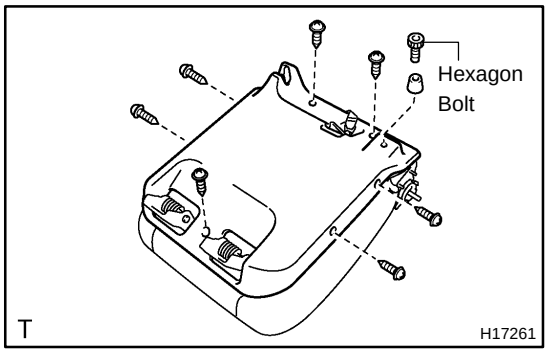

8. REMOVE REAR SEAT CUSHION UNDER COVER

(a) Using a 5 mm hexagon wrench, remove the bolt and cushion.

(b) Remove the 6 screws and rear seat cushion under cover.

(c) Remove the screw and fold seat stopper band.

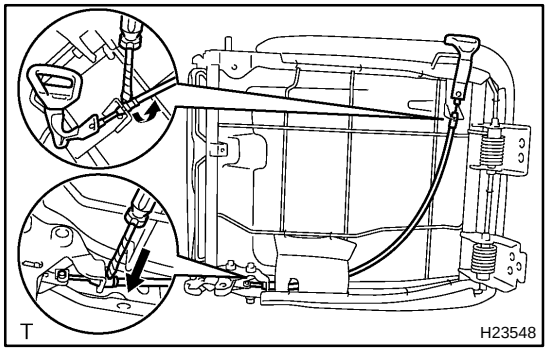

9. REMOVE FOLD SEAT LOCK CONTROL CABLE ASSY NO. 1

Using a screwdriver, remove the control cable as shown in the illustration.

HINT:

Tape the screwdriver tip before use.

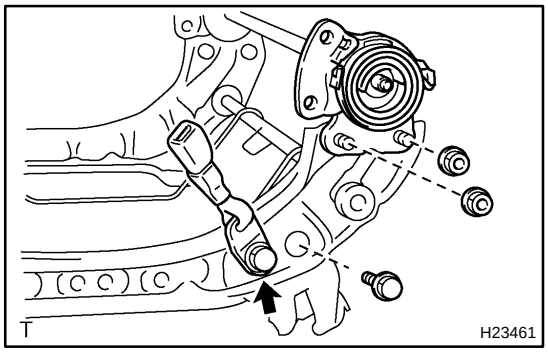

10. REMOVE LH REAR SEAT RECLINING ADJUSTER AND REAR SEAT LOCK

(a) Unfasten the bolt, then remove the rear No. 1 seat inner belt.

Torque: 42 N·m (430 kgf·cm, 32 ft·lbf)

(b) Remove the bolt, 2 nuts and LH rear seat reclining adjuster with rear seat lock.

Torque:

43 N·m (440 kgf·cm, 32 ft·lbf) for bolt

43 N·m (440 kgf·cm, 32 ft·lbf) for nut

(c) Using a screwdriver, remove the E−ring, then remove the LH rear seat reclining adjuster from the rear seat lock.

11. REMOVE RECLINING CONNECTING PIPE

12. REMOVE RH REAR SEAT RECLINING ADJUSTER

Remove the 2 nuts and RH rear seat reclining adjuster.

Torque: 43 N·m (440 kgf·cm, 32 ft·lbf)

13. REMOVE SEAT CUSHION COVER

(a) Remove the seat cushion cover with pad from the seat cushion frame.

(b) Remove the seat cushion cover from the seat cushion pad.

HINT:

At the time of reassembly, take as much care as possible to minimize wrinkles when installing hog rings.

14. REMOVE REAR SEAT CUSHION HINGE LH

(a) Using a screwdriver, remove the E−ring.

(b) Remove the pin, bushings, spring, collar and rear seat cushion hinge.

(c) Remove the rear seat cushion hinge on the other side using the same procedures (a to b) described above.

BO47I−02

INSPECTION

INSPECT RECLINING LOCK POSITION SLIPPING OFF

When reclining the seat, check that the RH and LH rear seat reclining adjusters are released at the same time.

HINT:

When the reclining lock position slips off, disassemble the seat to adjust the position.

BO4RC−03

INSTALLATION

Installation is in the reverse order of removal (see page BO−222).

BO4RB−03

REASSEMBLY

Reassembly is in the reverse order of disassembly (see page BO−223).

BO4R9−04

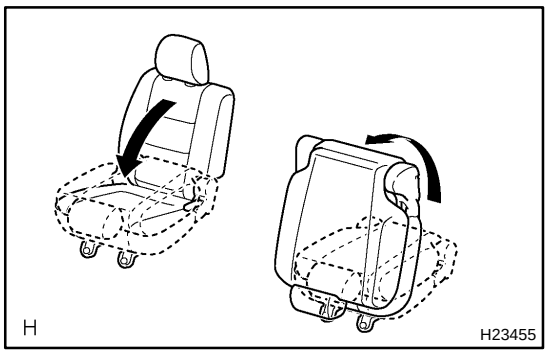

REMOVAL

1. FOLDING REAR SEAT RH

(a) Lower the headrest to the lowest position. Pull the seatback angle adjusting lever and fold the seatback down.

(b) Unlock the seat legs by pulling up one of the lever on the seat legs, and swing the seat up and forward.

2. REMOVE REAR SEAT RH

(a) Using a screwdriver, remove the 2 seat leg covers.

HINT:

Tape the screwdriver tip before use.

(b) Remove the 4 bolts and rear No.1 seat.

Torque: 37 N·m (380 kgf·cm, 27 ft·lbf)

ROOF HEADLINING

COMPONENTS

BO2F8−04

Standard cab:

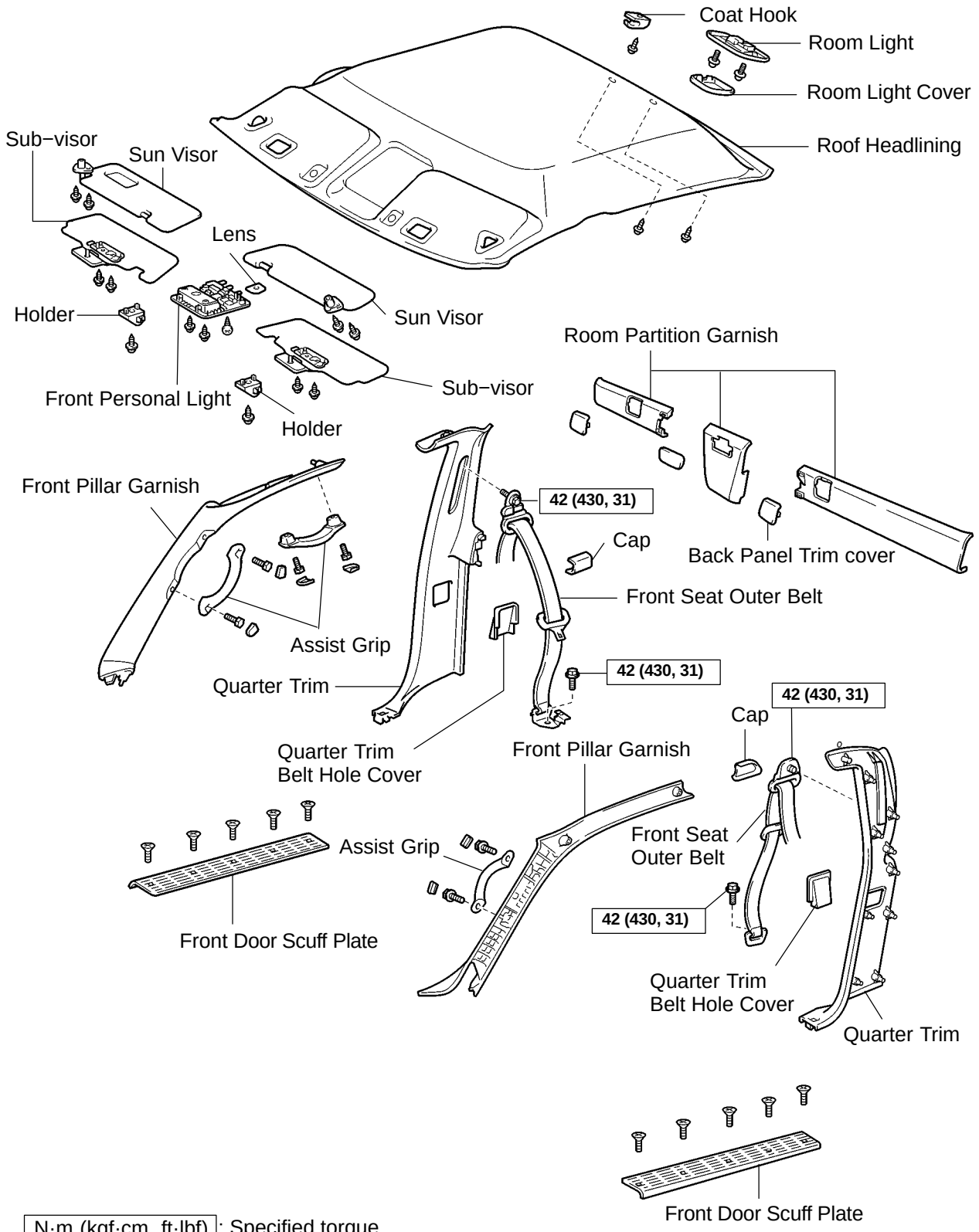

T N·m (kgf·cm, ft·lbf): Specified torque

cmc0414

Access cab:

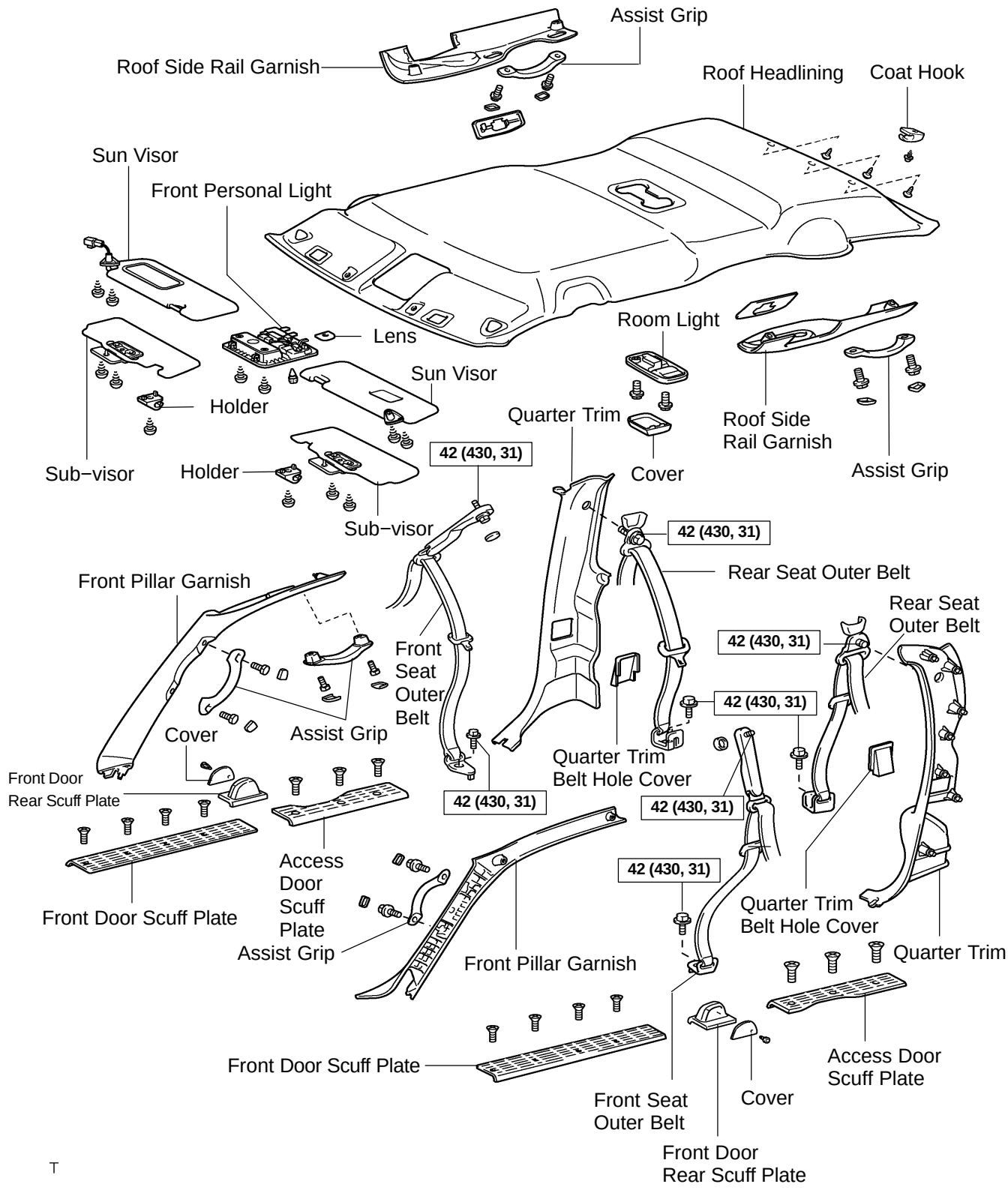

T

N·m (kgf·cm, ft·lbf) : Specified torque

H11168

BO2FA−05

INSTALLATION

Installation is in the reverse order of removal (see page BO−126).

BO4T5−01

REMOVAL

HINT:

- A bolt without a torque specification is shown in the standard bolt chart (see page SS−2).
- Tape the screwdriver tip before using it to remove the parts.

1. Access cab:
REMOVE REAR SEAT (See page BO−203)

2. REMOVE FRONT DOOR SCUFF PLATES

(a) Standard cab:
Remove the 10 screws and front door scuff plates.

(b) Access cab:
Remove the 8 screws and front door scuff plates.

3. Access cab:
REMOVE ACCESS DOOR SCUFF PLATES

Remove the 6 screws and access door scuff plates.

4. Access cab:
REMOVE FRONT DOOR REAR SCUFF PLATES

(a) Remove the 2 clips and 2 covers.

(b) Remove the 2 clips and 2 front door rear scuff plates.

5. REMOVE ASSIST GRIPS

(a) Using a screwdriver, remove the caps.

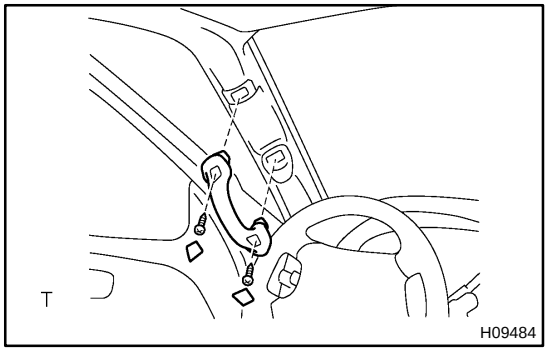

(b) Driver's side:
Using a torx® driver (T30), remove the 2 screws and assist grip.

(c) Passenger's side:
Using a torx® driver (T30), remove the 4 screws and 2 assist grips.

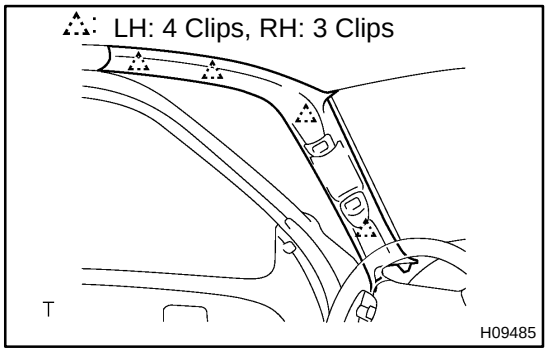

6. REMOVE FRONT PILLAR GARNISH

(a) Using a screwdriver, remove the front pillar garnish.

(b) Perform the same procedure on the other side.

7. Access cab:
REMOVE FRONT SEAT OUTER BELT ANCHORS

(a) Remove the bolt and front seat outer belt floor anchor.
Torque: 42 N·m (430 kgf·cm, 31 ft·lbf)

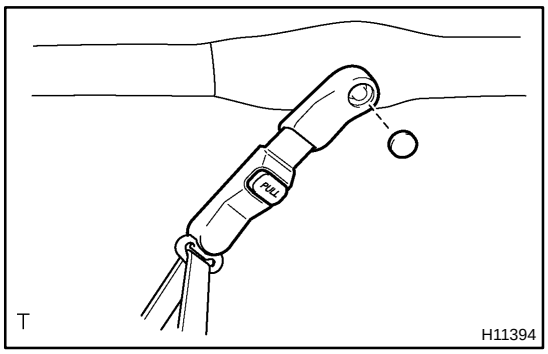

(b) Using a screwdriver, remove the cap.
(c) Remove the bolt and front seat outer belt shoulder anchor.
Torque: 42 N·m (430 kgf·cm, 31 ft·lbf)
(d) Perform the same procedure on the other side.

8. Access cab:
REMOVE ROOF SIDE RAIL GARNISH

(a) Using a screwdriver, remove the caps.
(b) Using a torx® driver (T30), remove the 2 screws and assist grip.

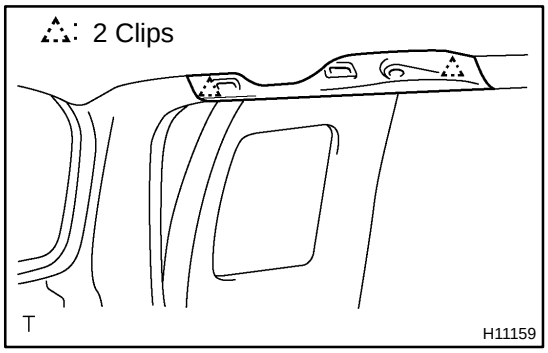

(c) Using a screwdriver, remove the roof side rail garnish.

9. REMOVE SUN VISORS

(a) Remove the 4 screws and 2 sun visors.
(b) w/ Light:
Disconnect the connector.

10. REMOVE SUB−VISORS

Remove the 4 screws and 2 sub−visors.

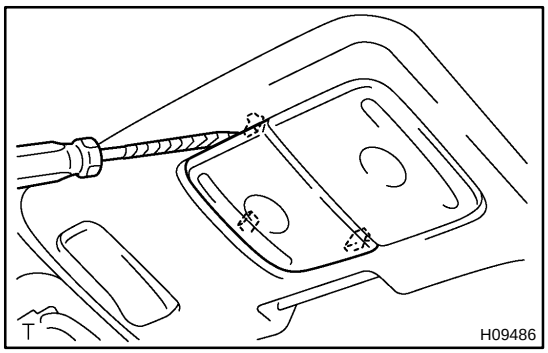

11. REMOVE FRONT PERSONAL LIGHT

(a) Using a screwdriver, remove the left side lens.

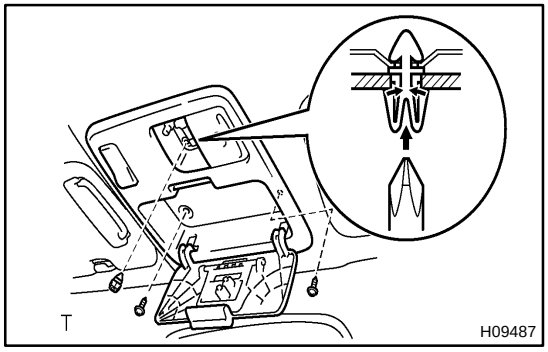

(b) Remove the 2 screws.
(c) Using a screwdriver, rotate the clip by 90° and remove it.
(d) Remove the front personal light, then disconnect the connector.

HINT:
At the time of installation, please refer to the following item.
When installing the front personal light, attach the clip to the housing and push it to the bracket.

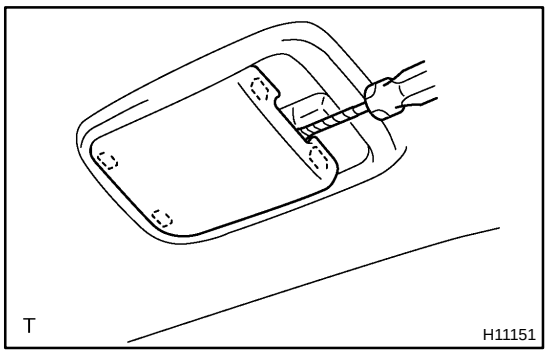

12. REMOVE ROOM LIGHT

(a) Using a screwdriver, remove the room light cover.

(b) Remove the 2 screws and room light, then disconnect the connector.

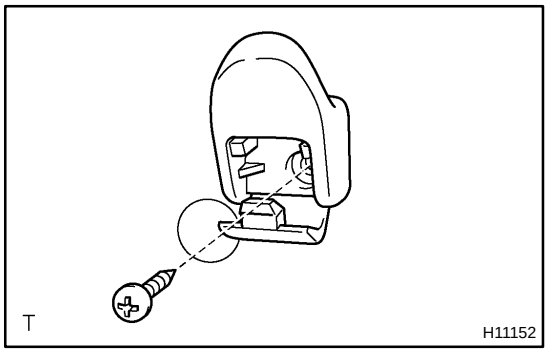

13. Standard cab:
REMOVE COAT HOOK

(a) Using a screwdriver, open the cap.

(b) Remove the screw and coat hook.

14. Standard cab:
REMOVE ROOM PARTITION GARNISHES

(a) Using a screwdriver, remove the back panel trim covers.

HINT:

Tape the screwdriver tip before use.

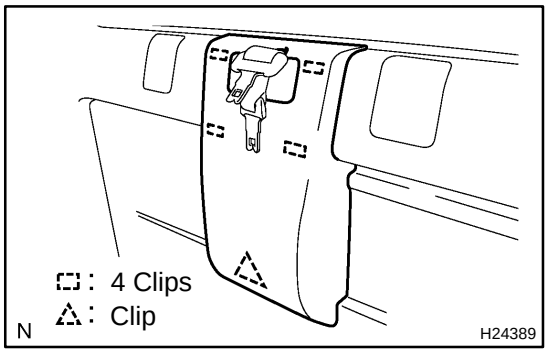

(b) Using a screwdriver, remove the room partition garnishes.

HINT:

Tape the screwdriver tip before use.

15. REMOVE QUARTER TRIM

(a) Standard cab:
Remove the bolt and front seat outer belt floor anchor.
Torque: 42 N·m (430 kgf·cm, 31 ft·lbf)

(b) Access cab:
Remove the bolt and rear seat outer belt floor anchor.
Torque: 42 N·m (430 kgf·cm, 31 ft·lbf)

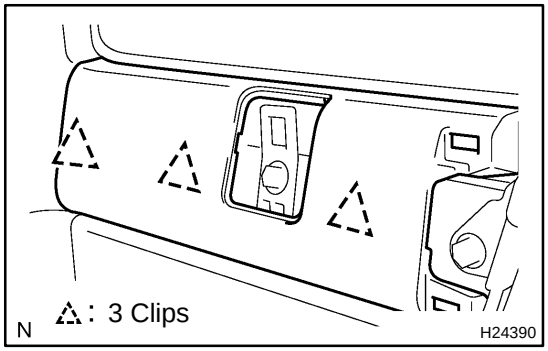

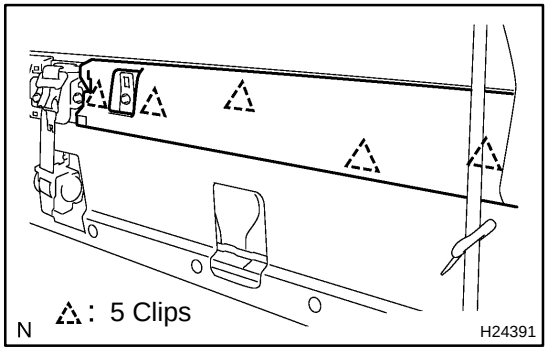

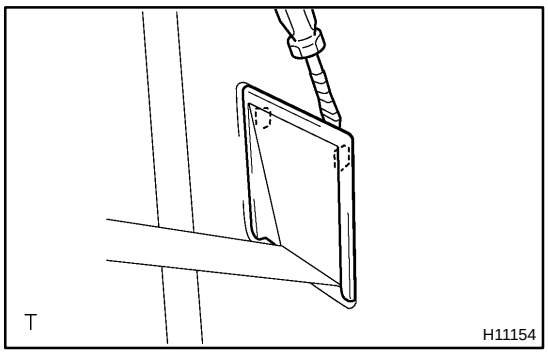

(c) Using a screwdriver, remove the quarter trim belt hole cover.

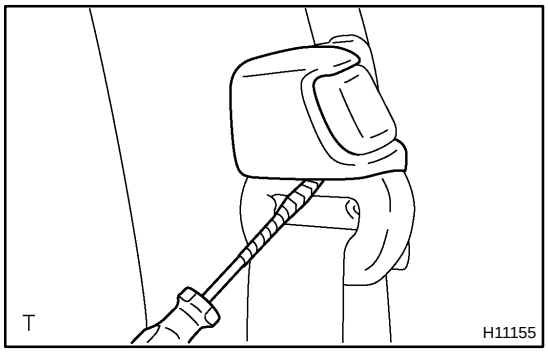

(d) Standard cab:
Using a screwdriver, remove the cap.

(e) Standard cab:
Unfasten the bolt and remove front seat outer belt shoulder anchor.
Torque: 42 N·m (430 kgf·cm, 31 ft·lbf)

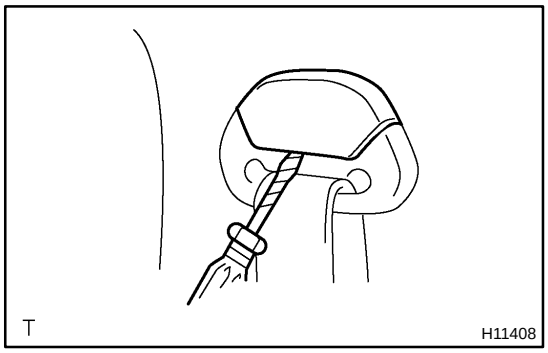

(f) Access cab:
Using a screwdriver, open the cap.

(g) Access cab:
Unfasten the bolt and remove rear seat outer belt shoulder anchor.
Torque: 42 N·m (430 kgf·cm, 31 ft·lbf)

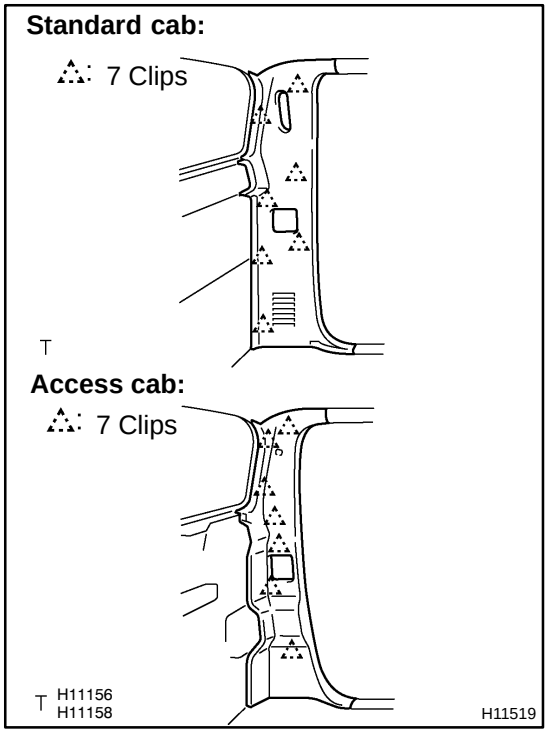

(h) Insert a screwdriver between the quarter trim and body panel to remove the quarter trim.

(i) Perform the same procedure on the other side.

16. REMOVE ROOF HEADLINING

(a) Remove the 2 screws and 2 sun visor holders.

(b) Standard cab:
Remove the 2 clips and roof headlining.

(c) Access cab:
Remove the 3 clips and roof headlining.

ROOF HEADLINING (Double Cab)

BO4QG−01

COMPONENTS

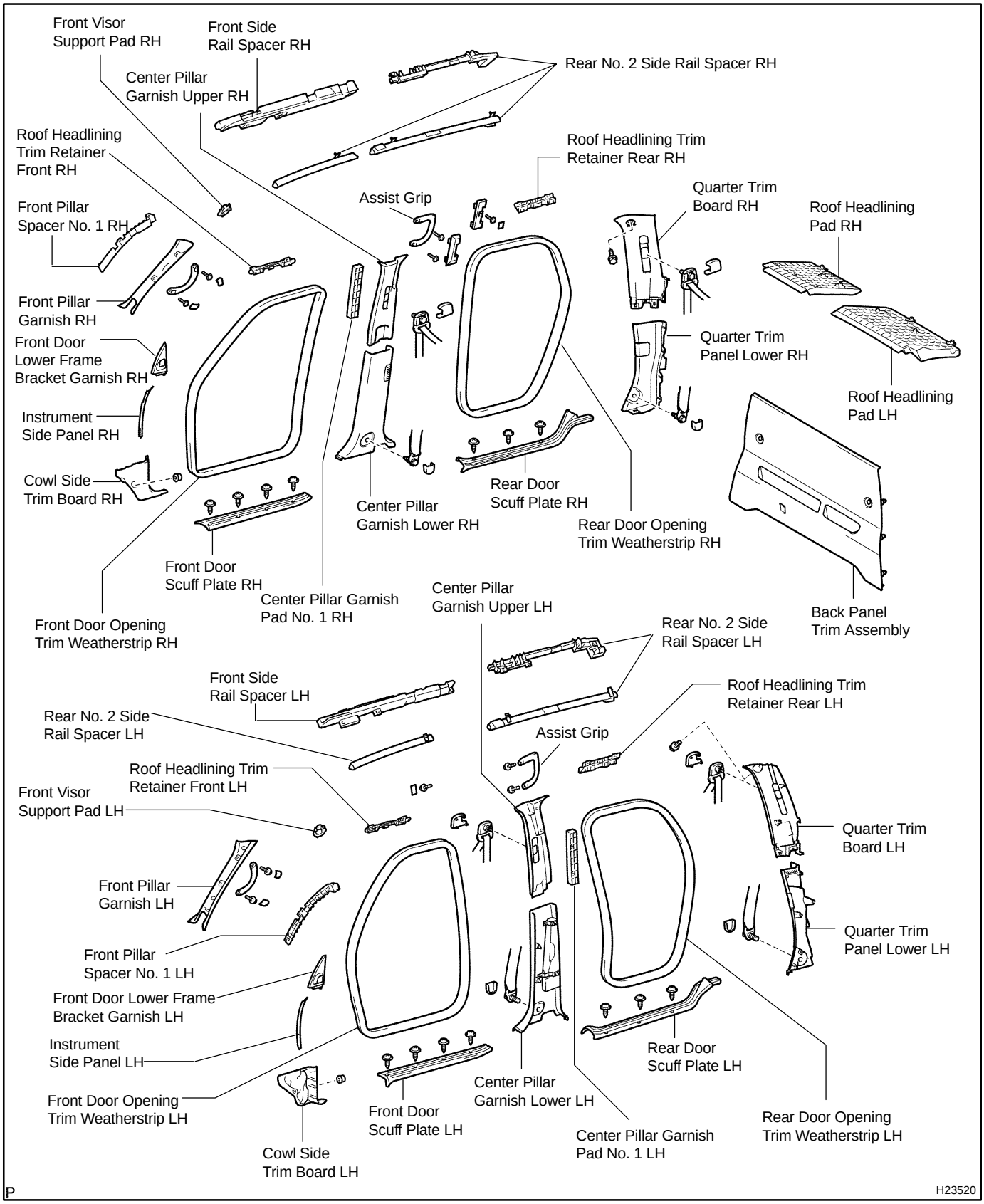

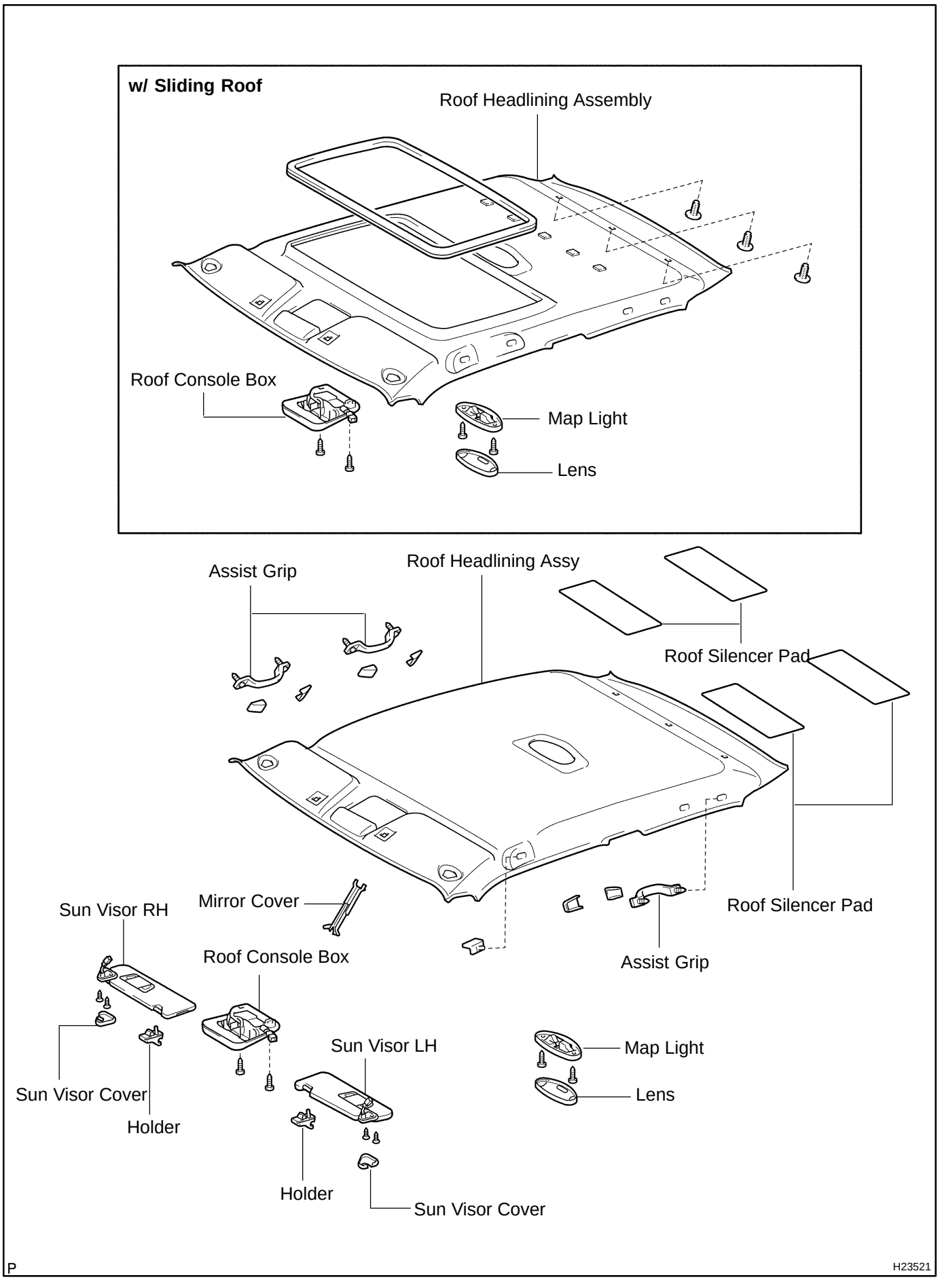
w/ Sliding Roof
Roof Headlining Assembly
Roof Console Box
Map Light
Lens
Assist Grip
Roof Headlining Assy
Roof Silencer Pad
Roof Silencer Pad
Mirror Cover
Sun Visor RH
Roof Console Box
Assist Grip
Sun Visor LH
Map Light
Lens
Sun Visor Cover
Holder
Holder
Sun Visor Cover
P
H23521

BO4QI−02

INSTALLATION

Installation is in the reverse order of removal (see page BO−133).

BO4QH−03

REMOVAL

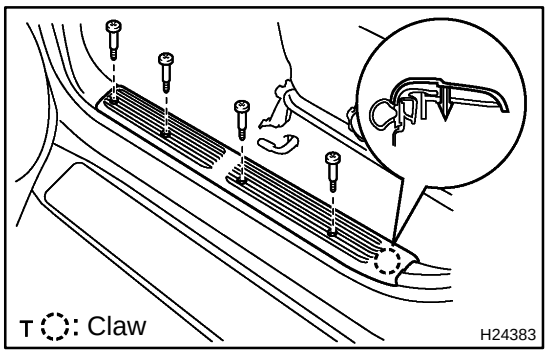

HINT:

- A bolt without a torque specification is shown in the standard bolt chart (see page SS−2).

1. REMOVE FRONT DOOR SCUFF PLATE LH

(a) Remove the 4 screws.

(b) Using a screwdriver, disengage the claw and remove the scuff plate.

HINT:

Tape the screwdriver tip before use.

2. REMOVE FRONT DOOR SCUFF PLATE RH

HINT:

Use the same procedures described for the LH side.

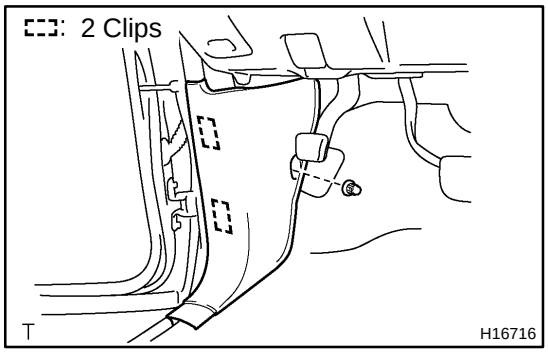

3. REMOVE COWL SIDE TRIM BOARD LH

(a) Remove the nut, 2 clips and cowl side trim board.

4. REMOVE COWL SIDE TRIM BOARD RH

HINT:

Use the same procedures described for the LH side.

5. REMOVE FRONT DOOR OPENING TRIM WEATHERSTRIP LH

6. REMOVE FRONT DOOR OPENING TRIM WEATHERSTRIP RH

7. REMOVE FRONT PILLAR GARNISH LH

(a) Remove the assist grip.

(1) Using a screwdriver, remove the 2 assist grip plugs.

HINT:

Tape the screwdriver tip before use.

(2) Remove the 2 screws and assist grip.

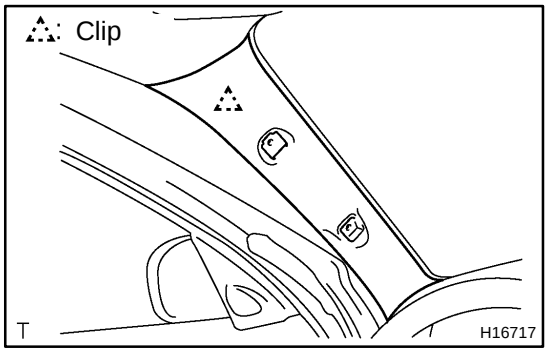

(b) Remove the front pillar garnish.

(c) Use the same manner described above to the other side.

8. REMOVE FRONT PILLAR GARNISH RH

HINT:

Use the same procedures described for the LH side.

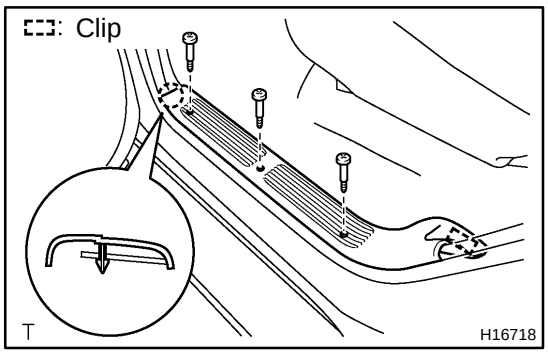

9. REMOVE REAR DOOR SCUFF PLATE LH

(a) Remove the 3 screws.

(b) Using a screwdriver, disengage the claw and remove the scuff plate.

HINT:

Tape the screwdriver tip before use.

10. REMOVE REAR DOOR SCUFF PLATE RH

HINT:

Use the same procedures described for the LH side.

11. REMOVE REAR DOOR OPENING TRIM WEATHERSTRIP LH

12. REMOVE REAR DOOR OPENING TRIM WEATHERSTRIP RH

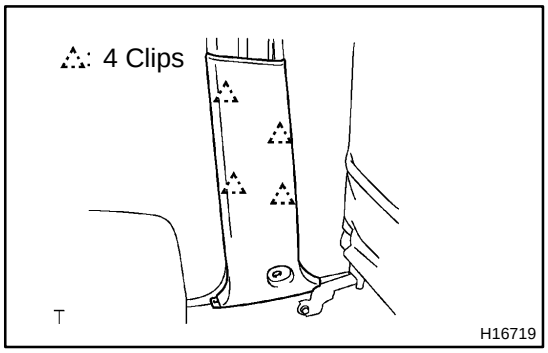

13. REMOVE LOWER CENTER PILLAR GARNISH LH

(a) Remove the front seat outer belt floor anchor.
Torque: 42 N·m (430 kgf·cm, 31 ft·lbf)

(b) Using a screwdriver, remove the 4 clips and pillar garnish.

HINT:

Tape the screwdriver tip before use.

14. REMOVE LOWER CENTER PILLAR GARNISH RH

HINT:

Use the same procedures described for the LH side.

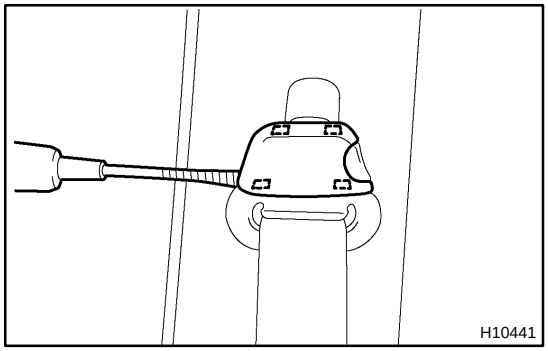

15. REMOVE FRONT SEAT OUTER BELT SHOULDER ANCHOR

(a) Using a screwdriver, remove the anchor cap.

HINT:

Tape the screwdriver tip before use.

(b) Remove the front seat outer belt shoulder anchor.
Torque: 42 N·m (430 kgf·cm, 31 ft·lbf)

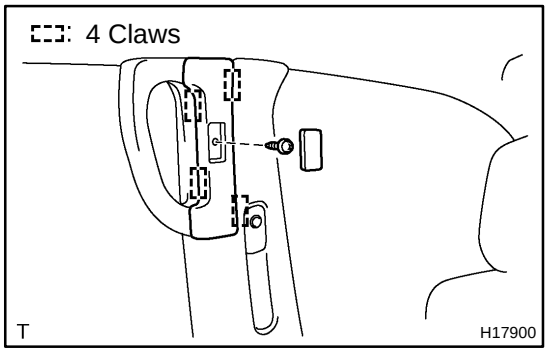

16. w/ Curtain shield airbag assembly: REMOVE ASSIST GRIP

(a) Using a screwdriver, remove the cap.

HINT:

Tape the screwdriver tip before use.

(b) Remove the screw.

(c) Using a screwdriver, remove the No. 2 assist grip plug.

HINT:

Tape the screwdriver tip before use.

(d) Remove the 2 screws and assist grip.
(e) Use the same manner described above to the other side.

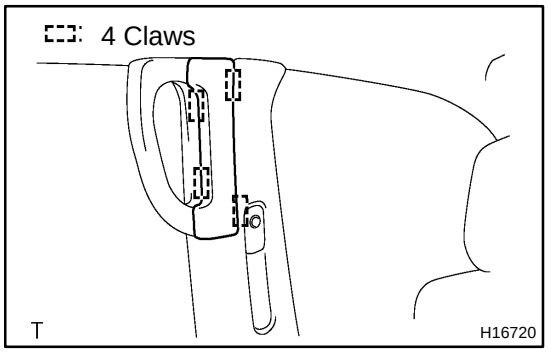

17. w/o Curtain shield airbag assembly: REMOVE ASSIST GRIP

(a) Using a screwdriver, remove the No. 2 assist grip piug.

HINT:

Tape the screwdriver tip before use.

(b) Remove the 2 screws and assist grip.
(c) Use the same manner described above to the other side.

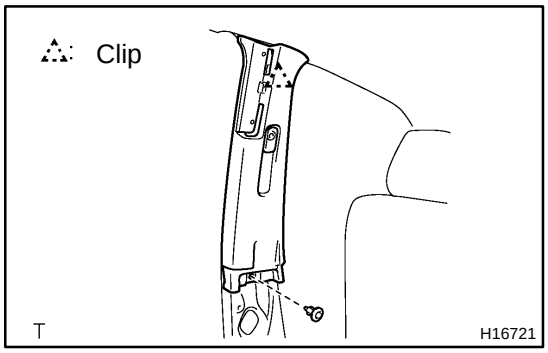

18. REMOVE CENTER PILLAR GARNISH UPPER LH

(a) Using a clip remover, remove the clip labeled A, clip labeled B and garnish.

19. REMOVE CENTER PILLAR GARNISH UPPER RH

HINT:

Use the same procedures described for the RH side.

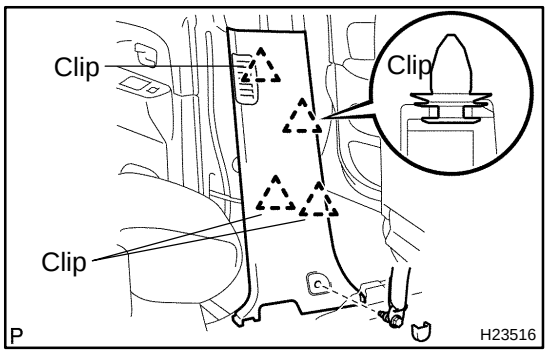

20. REMOVE CENTER PILLAR GARNISH LOWER LH

Using a screwdriver, remove the 4 clips and garnish.

HINT:

Tape the screwdriver tip before use.

21. REMOVE CENTER PILLAR GARNISH LOWER RH

HINT:

Use the same procedures described for the RH side.

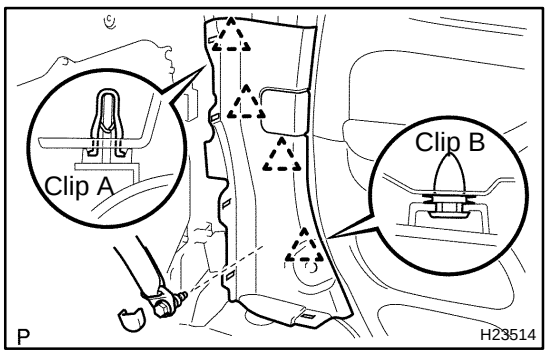

22. REMOVE QUARTER TRIM PANEL LOWER LH

(a) Remove the rear floor anchor belt cover and bolt.
(b) Using a screwdriver, remove the clip labeled A, 3 clips labeled B and pillar garnish.

HINT:

Tape the screwdriver tip before use.

23. REMOVE QUARTER TRIM PANEL LOWER RH

HINT:

Use the same procedures described for the RH side.

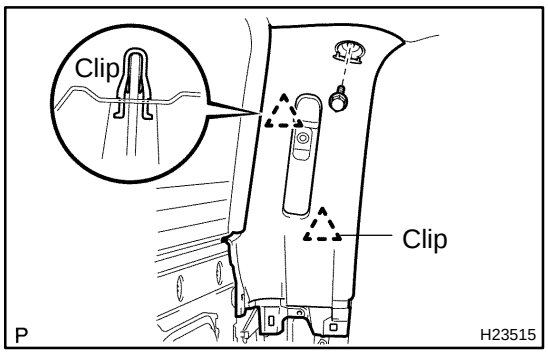

24. REMOVE QUARTER TRIM BOARD LH

(a) Remove the shoulder anchor bolt.

(b) Using a screwdriver, remove the 2 clips and bolt.

HINT:

Tape the screwdriver tip before use.

25. REMOVE QUARTER TRIM BOARD RH

HINT:

Use the same procedures described for the RH side.

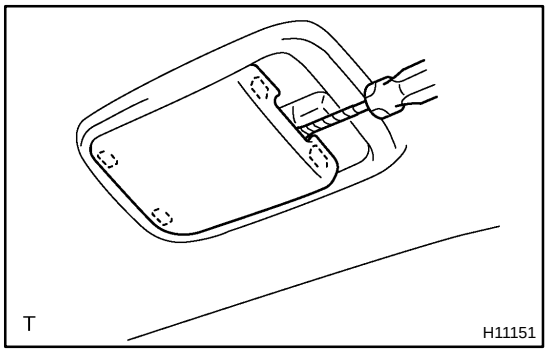

26. REMOVE DOME LIGHT

(a) Using a screwdriver, remove the lens.

HINT:

Tape the screwdriver tip before use.

(b) Remove the 2 screws and dome light, then disconnect the connector.

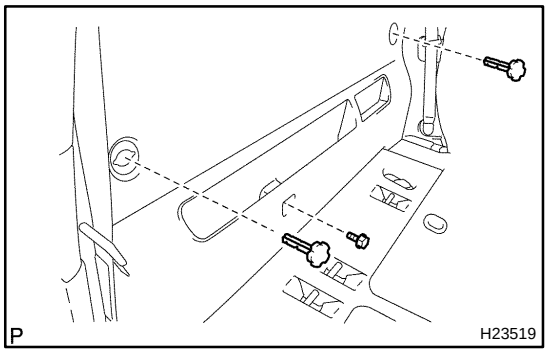

27. BACK PANEL TRIM

(a) Remove the 2 clips and bolt.

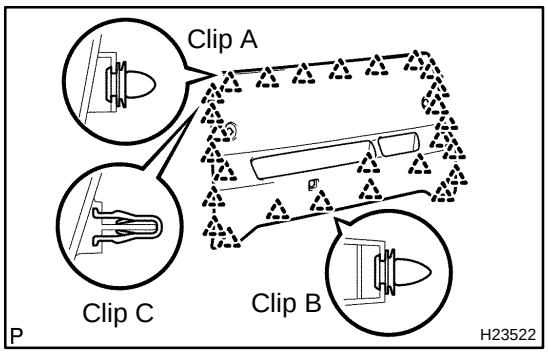

(b) Using a clip remover, remove the 6 clips labeled A and 7 clips labeled B, 14 clips labeled C and panel.

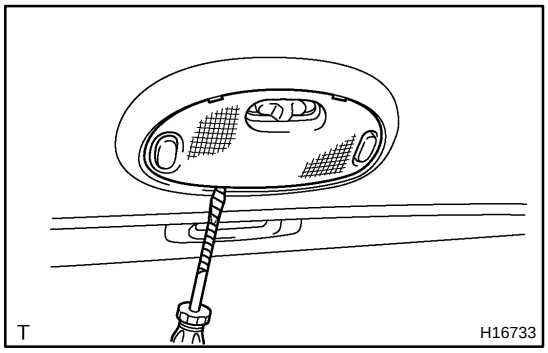

28. REMOVE MAP LIGHT

(a) Using a screwdriver, remove the lens.

HINT:

Tape the screwdriver tip before use.

(b) Remove the 2 screws and map light, then disconnect the connector.

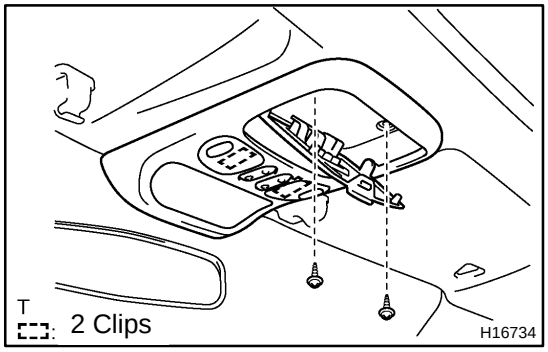

29. REMOVE ROOF CONSOLE BOX

(a) Remove the 2 screws.

(b) Using a screwdriver, remove the roof console box.

HINT:

Tape the screwdriver tip before use.

(c) Disconnect the connector.

30. REMOVE SUN VISORS AND HOLDERS

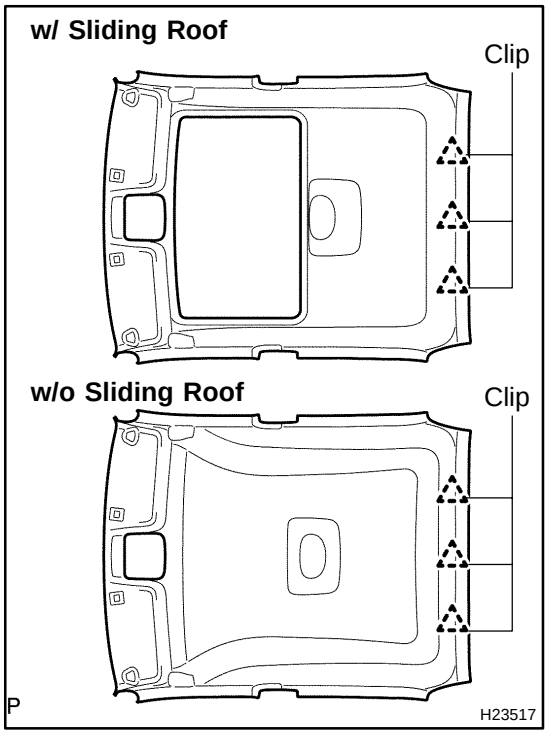

31. REMOVE ROOF HEADLINING

Using a clip remover, remove the 3 clips and headlining.

32. REMOVE ROOF SILENCER PAD

33. REMOVE FRONT SIDE RAIL SPACER LH

34. REMOVE FRONT SIDE RAIL SPACER RH

35. REMOVE REAR NO. 2 SIDE RAIL SPACER LH

36. REMOVE REAR NO. 2 SIDE RAIL SPACER RH

37. REMOVE FRONT PILLAR SPACER NO. 1 LH

38. REMOVE FRONT PILLAR SPACER NO. 1 RH

39. REMOVE FRONT DOOR LOWER FRAME BRACKET GARNISH LH

40. REMOVE FRONT DOOR LOWER FRAME BRACKET GARNISH RH

41. REMOVE INSTRUMENT PANEL LH

42. REMOVE INSTRUMENT PANEL RH

43. REMOVE CENTER PILLAR GARNISH PAD NO. 1 LH

44. REMOVE CENTER PILLAR GARNISH PAD NO. 1 RH

45. REMOVE ROOF HEADLINING TRIM RETAINER FRONT LH

46. REMOVE ROOF HEADLINING TRIM RETAINER FRONT RH

47. REMOVE FRONT VISOR SUPPORT PAD LH

48. REMOVE FRONT VISOR SUPPORT PAD RH

49. REMOVE ROOF HEADLINING TRIM RETAINER REAR LH

50. REMOVE ROOF HEADLINING TRIM RETAINER REAR RH

51. REMOVE ROOF HEADLINING PAD LH

52. REMOVE ROOF HEADLINING PAD RH

BO4RG−03

DISPOSAL

HINT:

When scrapping vehicles equipped with a seat belt pretensioner or disposing of a front seat outer belt (with seat belt pretensioner), always first activate the seat belt pretensioner in accordance with the procedure described below. If any abnormality occurs in the seat belt pretensioner operation, contact the SERVICE DEPT. of TOYOTA MOTOR SALES, U.S.A., INC. When disposing of a front seat outer belt (with seat belt pretensioner) activated in a collision, follow the same procedure given in step 1−(h) in ”DISPOSAL”.

CAUTION:

- **Never dispose of a front seat outer belt which has an inactivated pretensioner.**
- **The seat belt pretensioner produces a sizeable exploding sound when it activates, so perform the operation out−of−door and where it will not create a nuisance to nearby residents.**

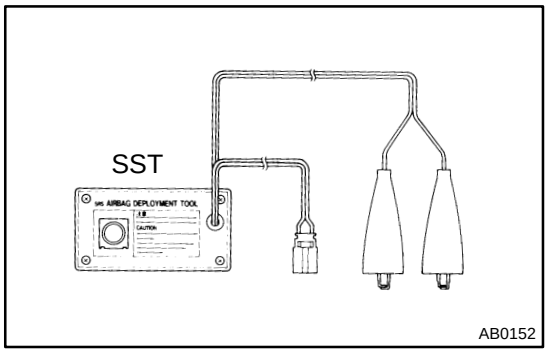

- **When activating the seat belt pretensioner, always use the specified SST (SRS Airbag Deployment Tool). Perform the operation in a place away from electrical noise.**
  SST 09082−00700, 09082−00740
- **When activating a front seat outer belt (with seat belt pretensioner), perform the operation at least 10 m (33 ft) away from the front seat outer belt.**
- **Use gloves and safety glasses when handling a front seat outer belt with activated pretensioner.**
- **Always wash your hands with water after completing the operation.**
- **Do not apply water to a front seat outer belt with activated pretensioner.**

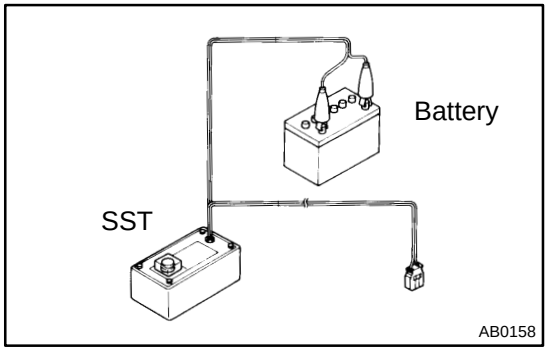

1. SEAT BELT PRETENSIONER ACTIVATION WHEN SCRAPPING VEHICLE

HINT:

Have a battery ready as the power source to activate the seat belt pretensioner.

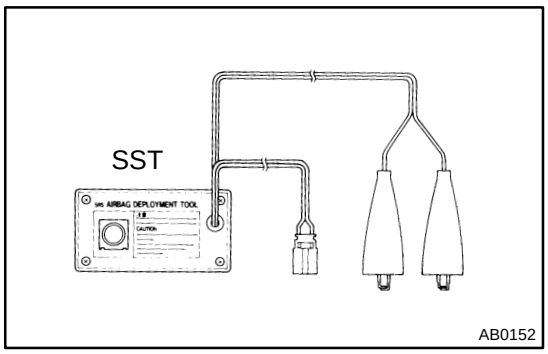

(a) Check the functioning of SST.

CAUTION:

When activating the seat belt pretensioner, always use the specified SST (SRS Airbag Deployment Tool.)

SST 09082−00700, 09082−00740

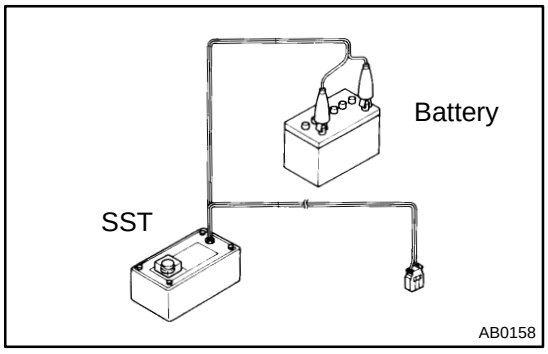

(1) Connect the SST to the battery.
Connect the red clip of the SST to the battery positive (+) terminal and the black clip to the battery negative (−) terminal.

HINT:

Do not connect the yellow connector which will be connected with the seat belt pretensioner.

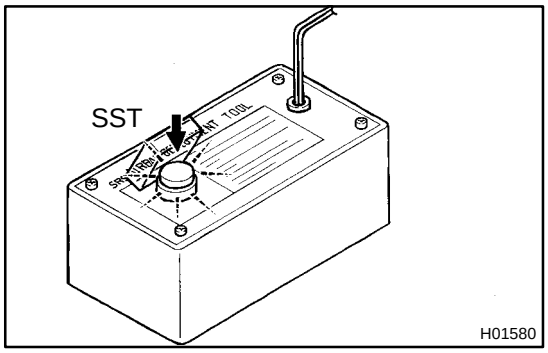

(2) Check the functioning of the SST.
Press the SST activation switch, and check that the LED of the SST activation switch lights up.

CAUTION:

If the LED lights up when the activation switch is not being pressed, SST may be malfunctioning. Definitely do not use the SST.

(3) Disconnect the SST from the battery.

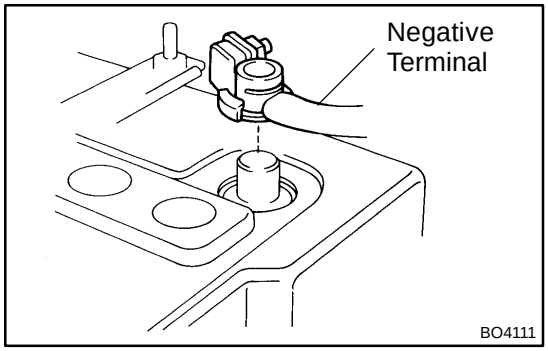

(b) Disconnect the negative (−) terminal cable from the battery.

CAUTION:

Work must be started at least 90 seconds after the ignition switch is turned to the LOCK position and the negative (−) terminal cable is disconnected from the battery.
(The SRS is equipped with a back−up power source. If work is started within 90 seconds of disconnecting the negative (−) terminal cable from the battery, the SRS may deploy.)

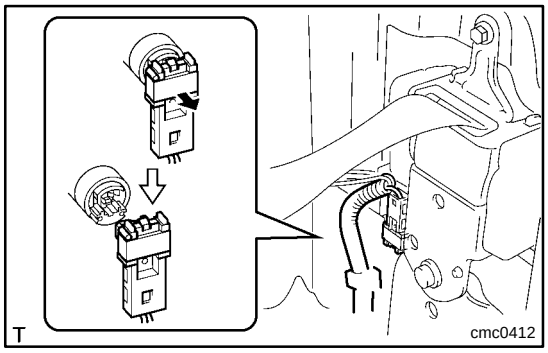

(c) Standard cab:
Disconnect the pretensioner connector.
(1) Remove the front door scuff plate.
(2) Remove the front pillar garnish.
(3) Remove the back panel upper garnish.
(4) Disconnect the connector and the front seat outer belt floor anchor.
(5) Remove the quarter trim.
(6) Disconnect the pretensioner connector as shown in the illustration.

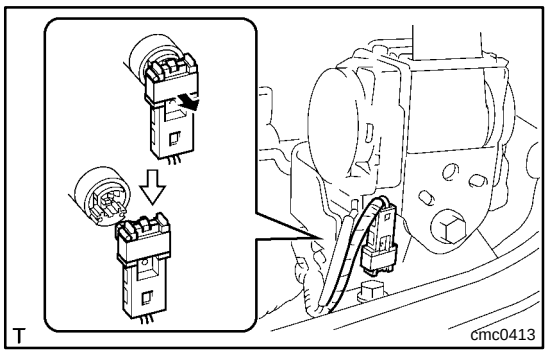

(d) Access cab:
Disconnect the pretensioner connector.
(1) Remove the front door scuff plate.
(2) Remove the rear door scuff plate.
(3) Remove the front seat outer belt floor anchor.
(4) Remove the front seat outer belt shoulder belt.
(5) Remove the roof side rail garnish.
(6) Remove the front door rear scuff plate and cover.
(7) Disconnector the pretensioner connector as shown in the illustration.

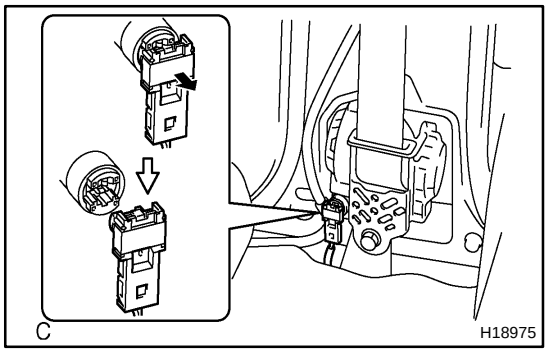

(e) Double cab:
Disconnect the pretensioner connector.
(1) Remove the front door scuff plate.
(2) Remove the back door scuff plate.
(3) Remove the lower center pillar garnish.
(4) Disconnect the pretensioner connector as shown in the illustration.

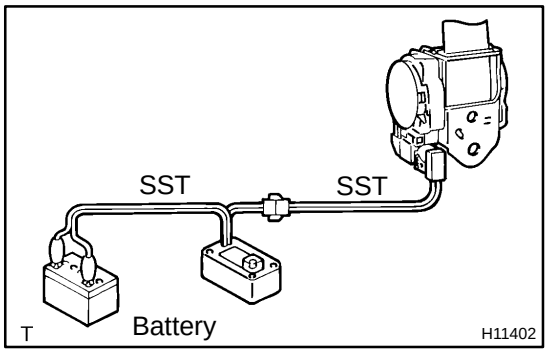

(f) Install the SST.
(1) Buckle the front seat belt and check that there is no looseness and slack in the front seat inner belt and front seat outer belt.
(2) Connect the 2 SST, then connect them to the seat belt pretensioner.
SST 09082−00700, 09082−00740

NOTICE:
To avoid damaging the SST connector and wire harness, do not lock the secondary lock of the twin lock.

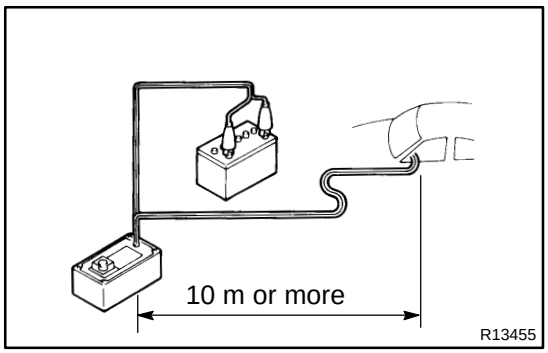

(3) Move the SST to at least 10 m (33 ft) away from the front of the vehicle.
(4) Close all the doors and windows of the vehicle.

HINT:
Do not close the window fully. Allow clearance for inserting the SST wire harness.

NOTICE:
Take care not to damage the SST wire harness.

(5) Connect the SST red clip to the battery positive (+) terminal and the black clip to the negative (−) terminal.

(g) Activate the seat belt pretensioner.
(1) Confirm that no one is inside the vehicle or within 10 m (33 ft) area around the vehicle.
(2) Press the SST activation switch and activate the seat belt pretensioner.

HINT:
The seat belt pretensioner operates simultaneously as the LED of the SST activation switch lights up.

(h) Dispose of the front seat outer belt (with seat belt pretensioner).

CAUTION:

- **The front seat outer belt is very hot when the seat belt pretensioner is activated. Leave it alone for at least 30 minutes after activation.**
- **Use gloves and safety glasses when handling a front seat outer belt with activated seat belt pretensioner.**
- **Always wash your hands with water after completing the operation.**
- **Do not apply water to a front seat outer belt with activated seat belt pretensioner.**

HINT:

When scrapping a vehicle, activate the seat belt pretensioner and scrap the vehicle with activated front seat outer belt still installed.

2. ACTIVATION WHEN DISPOSING OF FRONT SEAT OUTER BELT ONLY

NOTICE:

- **When disposing of the front seat outer belt (with seat belt pretensioner) only, never use the customer's vehicle to activate the seat belt pretensioner.**
- **Be sure to follow the procedure given on the next page when activating the seat belt pretensioner.**

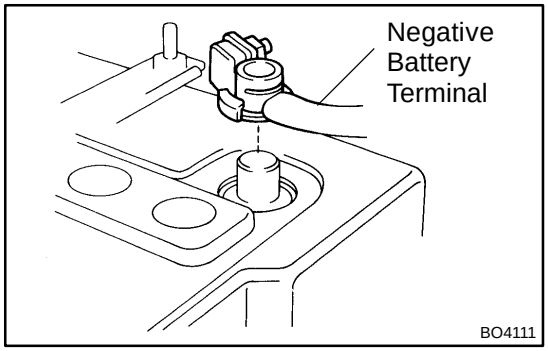

(a) Disconnected the negative (−) terminal cable from the battery.

HINT:

Have a battery ready as the power source when activating the seat belt pretensioner.

NOTICE:

If the cable is disconnected from the negative battery terminal, the preset AM and FM stations stored in memory are erased. Be sure to make note of them before disconnecting the cable.

CAUTION:

Work must be started at least 90 seconds after the ignition switch is turned to the LOCK position and the cable is disconnected from the negative (−) battery terminal.

(The SRS is equipped with a back−up power source. If work is started within 90 seconds of disconnecting the cable from the negative (−) battery terminal, the SRS may deploy.)

(b) Remove the front seat outer belt (see page BO−229).

HINT:

Cut the belt near the seat belt retractor.

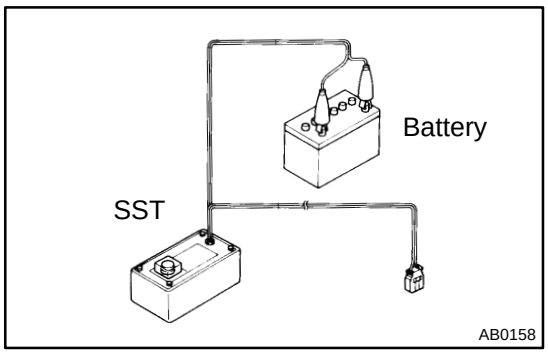

(c) Check the functioning of SST (see step 1−(a)).
SST 09082−00700, 09082−00740
(1) Disconnect the SST from the battery.

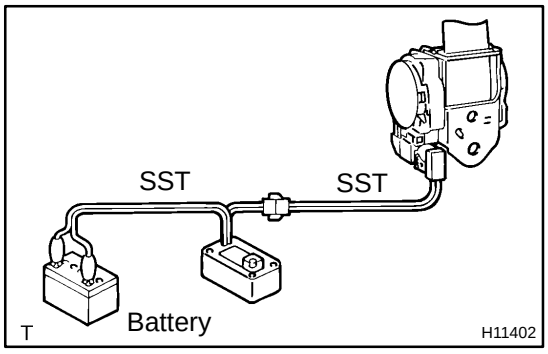

(d) Install the SST.
(1) Connect the 2 SST, then connect them to the seat belt pretensioner.
SST 09082−00700, 09082−00740

NOTICE:
To avoid damaging the SST connector and wire harness, do not lock the secondary lock of the twin lock.

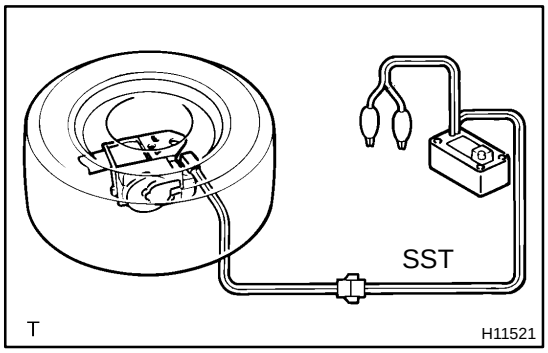

(2) Place the front seat outer belt on the ground and cover it with the disc wheel with tire.

NOTICE:
Place the front seat outer belt as shown in the illustration.

(3) Move the SST at least 10 m (33 ft) away from the disc wheel.

NOTICE:
Take care not to damage the SST wire harness.

(e) Activate the seat belt pretensioner.
(1) Connect the SST red clip to the battery positive (+) terminal and black clip to the battery negative (−) terminal.
(2) Check that no one is within 10 m (33 ft) area around the disc wheel.
(3) Press the SST activation switch and activate the seat belt pretensioner.

HINT:
The seat belt pretensioner operates simultaneously as the LED of the SST activation switch lights up.

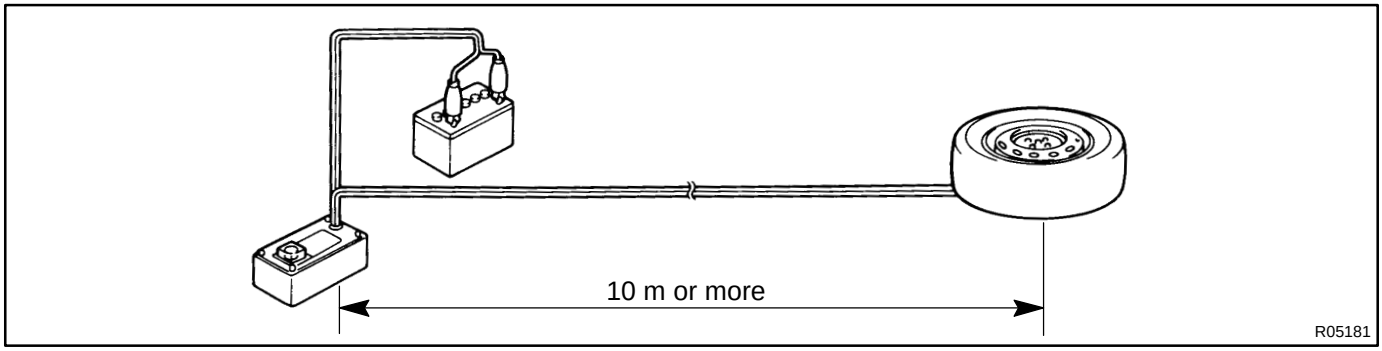

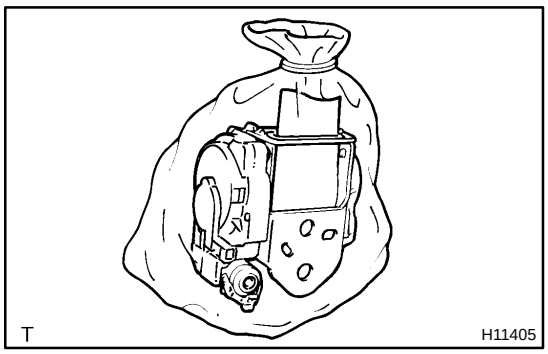

(f) Dispose of the front seat outer belt (with seat belt pretensioner).

CAUTION:

- **The front seat outer belt is very hot when the seat belt pretensioner is activated. Leave it alone for at least 30 minutes after activation.**
- **Use gloves and safety glasses when handling a front seat outer belt with activated seat belt pretensioner.**
- **Always wash your hands with water after completing the operation.**
- **Do not apply water to a front seat outer belt with activated seat belt pretensioner.**

(1) Remove the disc wheel and SST.

(2) Place the front seat outer belt in a vinyl bag, tie the end tightly and dispose of it in the same way as other general parts.

BO2G5−04

INSPECTION

1. PRETENSIONER IS NOT ACTIVATED

(a) Perform a diagnostic system check (see page DI−1851).

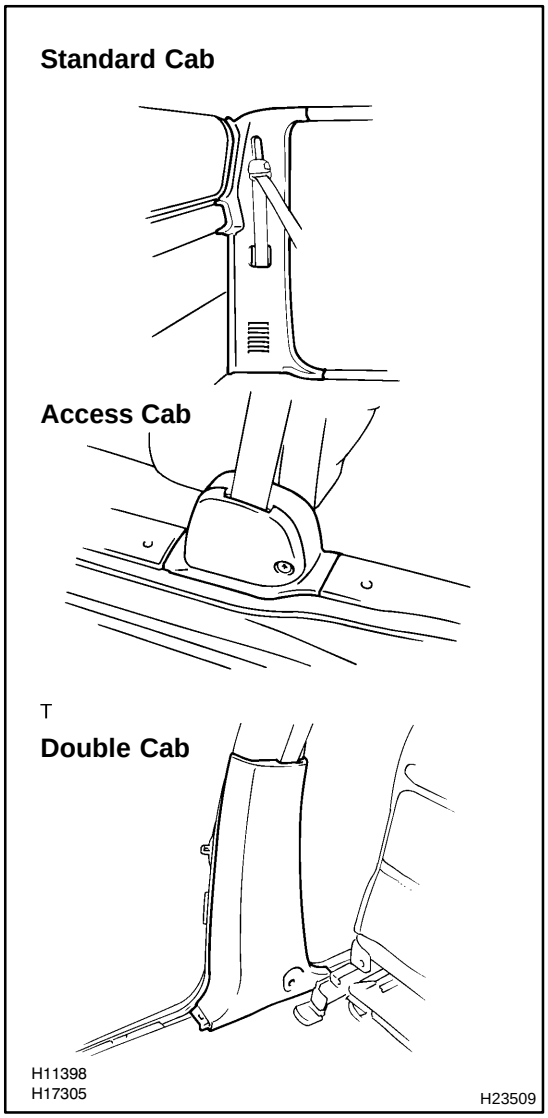

(b) Perform a visual check which includes the following items with the front seat outer belt removed from the vehicle.

- Standard cab:
  Check the quarter trim for cuts, cracks or marked discoloration.
- Access cab:
  Check for cuts and cracks in, or marked discoloration on the front door rear scuff plate.
- Double cab:
  Check for cuts and cracks in, or marked discoloration on the front door rear scuff plate and front door rear scuff plate and center piller gernish lower.
- Check for cuts and cracks in wire harness, and for chipping in connectors.

Standard cab:

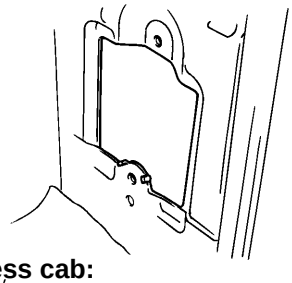

Access cab:

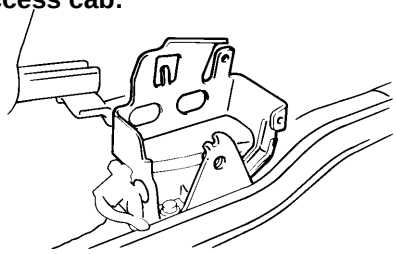

Double cab:

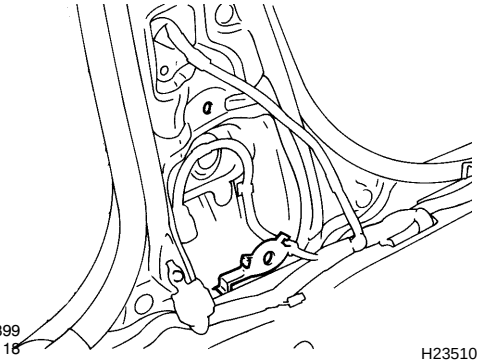

H11399
H04118

H23510

- Standard cab:
  Check for deformation of the quarter panel.
- Access cab:
  Check for deformation of the ELR bracket.
- Double cab:
  Check for deformation of the ELR bracket.

CAUTION:
For removal and installation of the front seat outer belt, see page BO−236 and BO−252.
Be sure to follow the correct procedure.

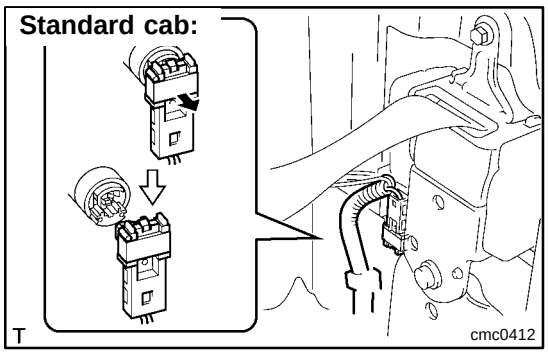

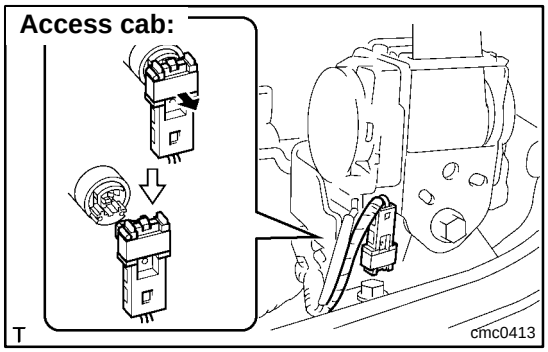

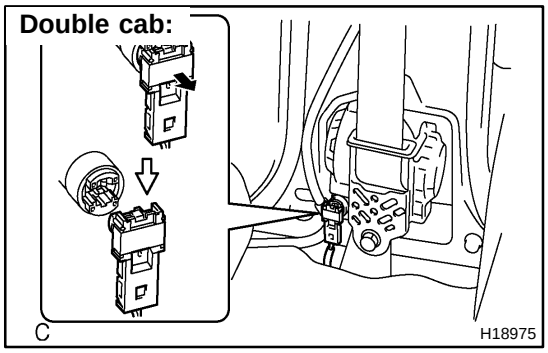

- Check for cuts and miute cracks in wire harness or marked discoloration on the front seat outer belt.

CAUTION:
For removal and installation of the front seat outer belt, see page BO−236 and BO−252.
Be sure to follow the correct procedure.

2. PRETENSIONER IS ACTIVATED

(a) Perform a diagnostic system check (see page DI−1851).

Standard cab:

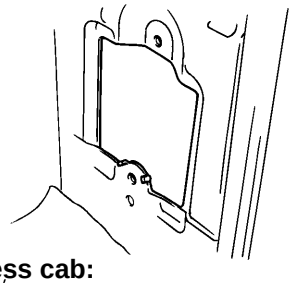

Access cab:

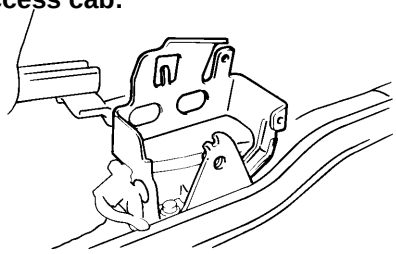

T

Double cab:

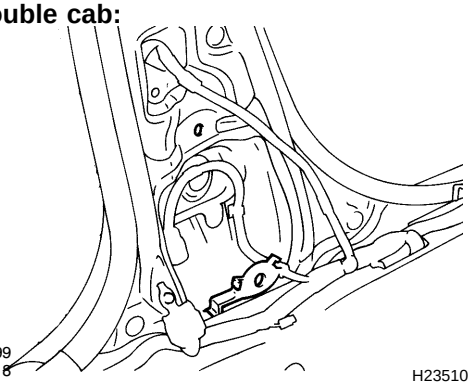

H11399
H04118

H23510

(b) Perform a visual check which includes the following items with the front seat outer belt removed from the vehicle.
- Standard cab:
  Check for deformation of the quarter panel.
- Access cab:
  Check for deformation of the ELR bracket.
- Check for damage on the connector and wire harness.

BO4T4−02

INSTALLATION

NOTICE:

- **Never use a seat belt pretensioner from another vehicle. When replacing parts, replace them with new parts.**
- **Make sure that the front seat outer belt is installed with the specified torque.**
- **If the front seat outer belt has been dropped, or there are cracks, dents or other defects in the case or connector, replace the front seat outer belt with a new one.**
- **When installing the front seat outer belt, take care that the wiring does not interfere with other parts and is not pinched between other parts.**

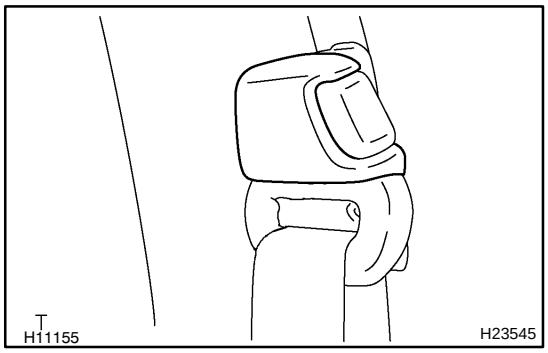

1. Double cab:
INSTALL FRONT SEAT OUTER BELT LH and RH

(a) Install the shoulder of the front seat outer belt.
  (1) Install the rear seat outer belt shoulder anchor with the bolt.
  Torque: 42 N·m (430 kgf·cm, 32 ft·lbf)
  (2) Install the cap.

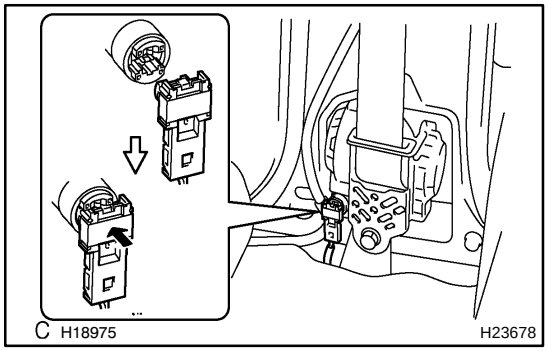

(b) Install the retractor of the rear seat outer belt.
  (1) Install the rear seat outer belt with the 2 bolts.
  Torque: 42 N·m (430 kgf·cm, 32 ft·lbf)
  (2) Connect the connector as shown in the illustration.

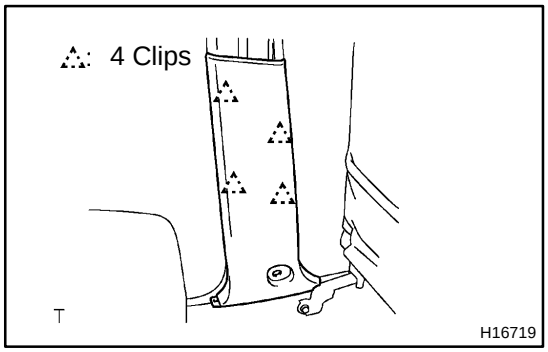

(c) Install the lower center pillar garnish.
(d) Install the front seat outer belt floor anchor with the bolt.
  Torque: 42 N·m (430 kgf·cm, 32 ft·lbf)

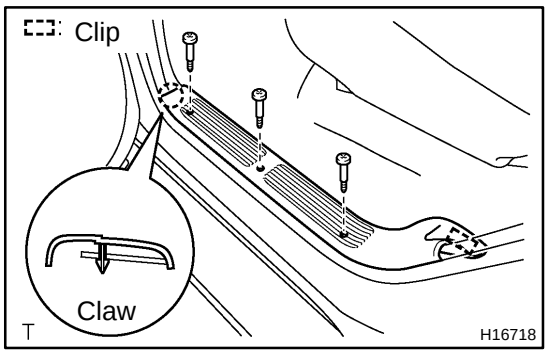

(e) Install the rear door scuff plate with the 3 screws.

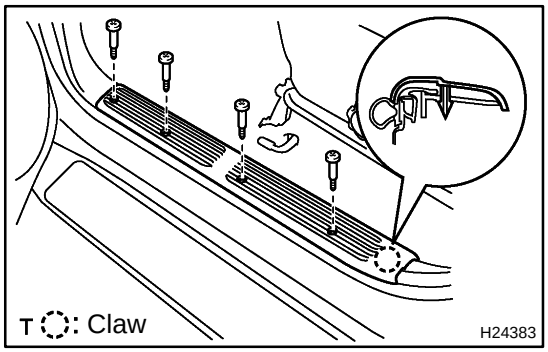

(f) Install the front door scuff plate with the 3 screws.

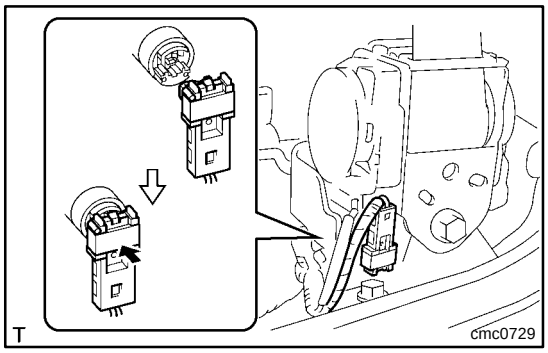

2. Access cab:

INSTALL FRONT SEAT OUTER BELT

(a) Install the retractor of the front seat outer belt.

(1) Install the retractor of the front seat outer belt with the 2 bolt.

Torque:

Upper: 8.5 N·m (87 kgf·cm, 75 in.·lbf)

Lower: 42 N·m (430 kgf·cm, 32 ft·lbf)

(2) Connect the pretensioner connector as shown in the illustration.

(b) Install the front door rear scuff plate and cover.

(1) Install the front door rear scuff plate with the clip.

(2) Install the cover with the clip.

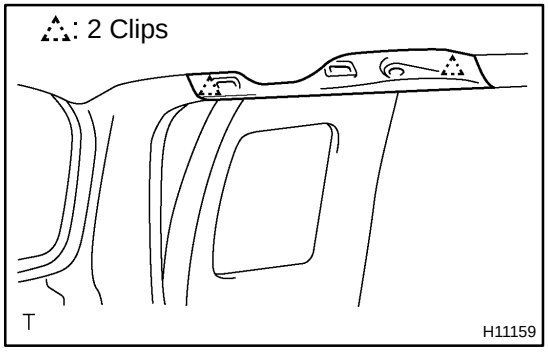

(c) Install the roof side rail garnish.

(1) Install the roof side rail garnish.

(2) Using a torx® driver, install the assist grip with the 2 torx® screws.

Torx® driver:

T30 (Part No. 09041−00030 or locally manufactured tool)

(3) Install the caps.

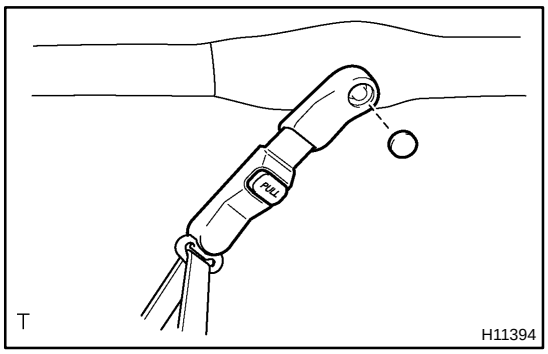

(d) Install the front seat outer belt shoulder anchor.
(1) Install the front seat outer belt shoulder anchor with the bolt.
Torque: 42 N·m (430 kgf·cm, 32 ft·lbf)
(2) Install the cap.
(e) Install the front seat outer belt floor anchor with the bolt.
Torque: 42 N·m (430 kgf·cm, 32 ft·lbf)
(f) Install the rear door scuff plate with the 3 screws.
(g) Install the front door scuff plate with the 4 screws.

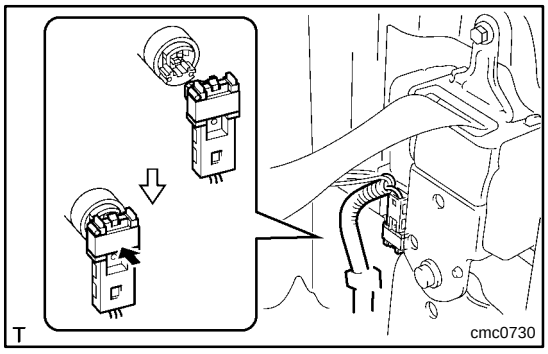

3. Standard cab:
INSTALL FRONT SEAT OUTER BELT

(a) Install the retractor of the front seat outer belt.
(1) Install the retractor of the front seat outer belt with the 2 bolts.
Torque:
8.5 N·m (87 kgf·cm, 75 in.·lbf) for upper Bolt
42 N·m (430 kgf·cm, 32 ft·lbf) for lower bolt
(2) Connect the pretensioner connector as shown in the illustration.

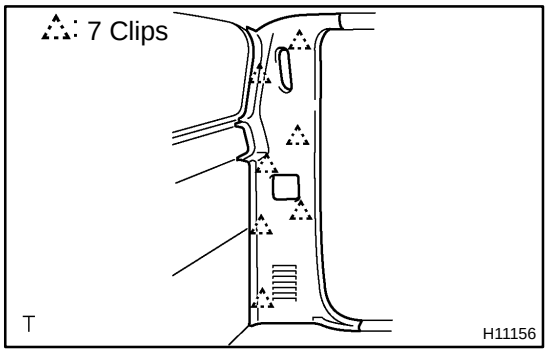

(b) Install the quarter trim.
(1) Install the quarter trim.
(2) Install the front seat outer belt shoulder anchor with the bolt.
Torque: 42 N·m (430 kgf·cm, 32 ft·lbf)
(3) Install the cap.
(4) Install the quarter trim belt hole cover.
(c) Install the front seat outer belt floor anchor with the bolt then connect the connector.
Torque: 42 N·m (430 kgf·cm, 32 ft·lbf)

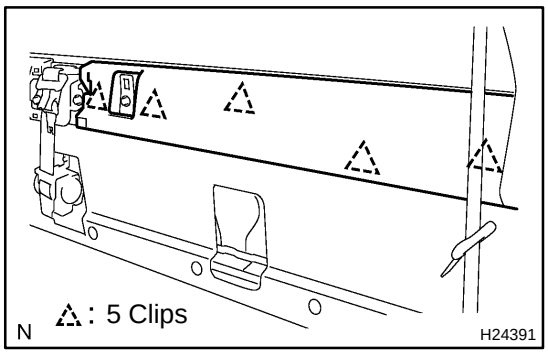

(d) Install the room partition garnishes.
(e) Install the back panel trim covers.

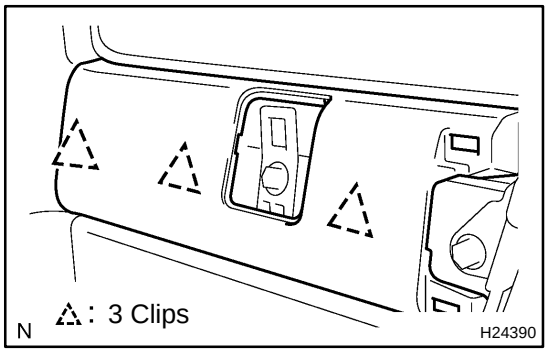

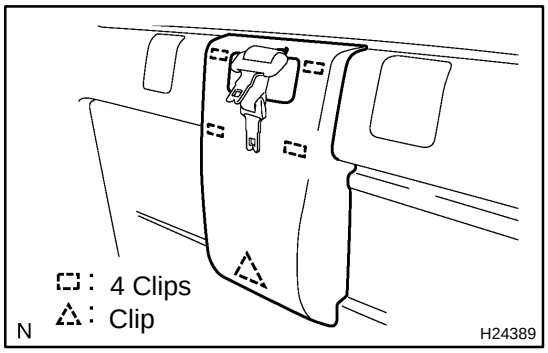

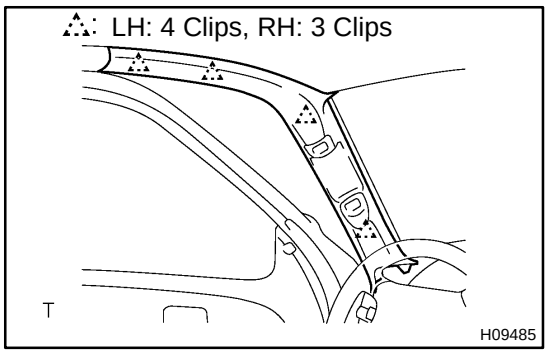

(f) Install the front pillar garnish.
(1) Install the front pillar garnish.

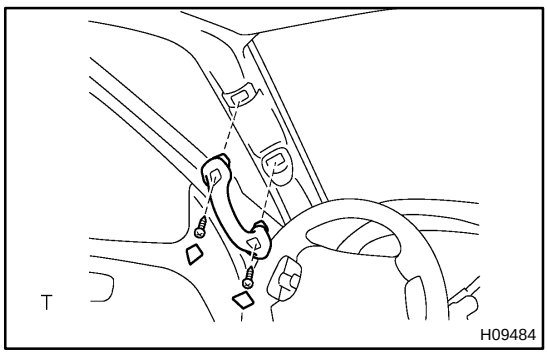

(2) Using a torx® driver, install the assist grip with the 2 torx® screws.

Torx® driver:
T30 (Part No. 09041−00030 or locally manufactured tool)

(3) Install the caps.
(g) Install the front door scuff plate with the 5 screws.

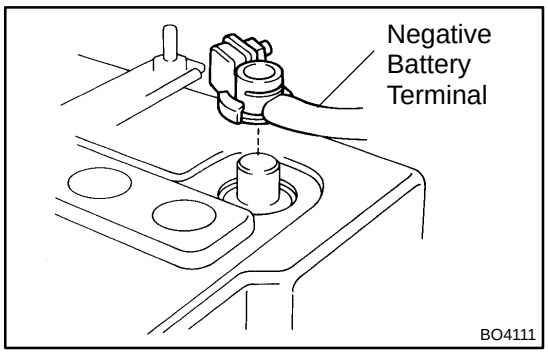

4. CONNECT CABLE TO NEGATIVE BATTERY TERMINAL

Connect the cable to the negative (−) battery terminal.

SEAT BELT PRETENSIONER

BO4T3−02

REMOVAL

NOTICE:

- **If the wiring connector of the seat belt pretensioner is disconnected with the ignition switch ON, diagnostic trouble codes will be recorded.**
- **Never use a seat belt pretensioner from another vehicle. When replacing parts, replace them with new parts.**

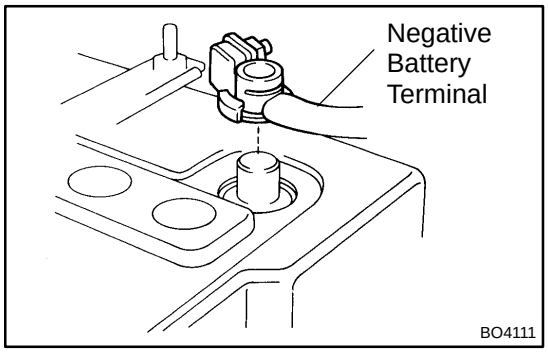

1. DISCONNECT CABLE FROM NEGATIVE BATTERY TERMINAL

Disconnect the cable from the negative (−) battery terminal.

NOTICE:

If the cable is disconnected from the negative battery terminal, the preset AM and FM stations stored in memory are erased. Be sure to make note of them before disconnecting the cable.

CAUTION:

Work must be started at least 90 seconds after the ignition switch is turned to the LOCK position and the cable is disconnected from the negative (−) battery terminal.

(The SRS is equipped with a back−up power source. If work is started within 90 seconds of disconnecting the cable from the negative (−) battery terminal, the SRS may deploy.)

2. Standard cab:

REMOVE FRONT SEAT OUTER BELT

(a) Remove the 5 screws and front door scuff plate.

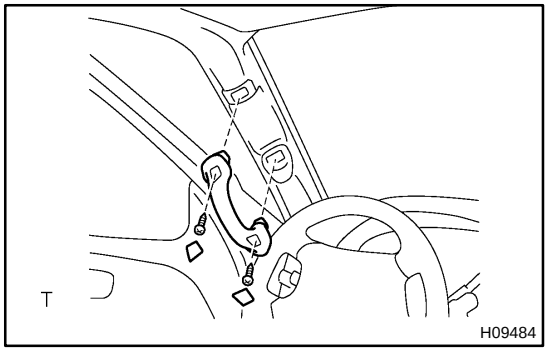

(b) Remove the front pillar garnish.

(1) Using a screwdriver, remove the caps.

HINT:

Tape the screwdriver tip before use.

(2) Using a torx® driver, remove the torx® screws and assist grip.

Torx® driver:

T30 (Part No. 09041−00030 or locally manufactured tool)

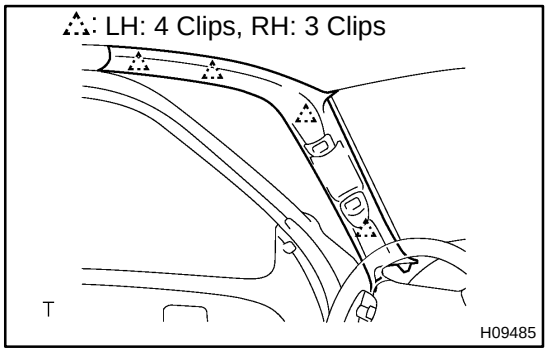

(3) Using a screwdriver, remove the front pillar garnish.

HINT:

Tape the screwdriver tip before use.

(c) Remove the room partition garnishes.

(1) Using a screwdriver, remove the back panel trim covers.

HINT:

Tape the screwdriver tip before use.

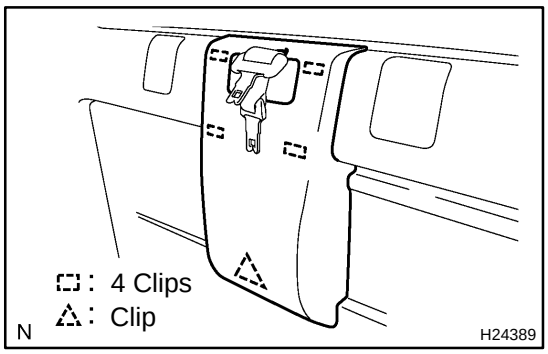

(2) Using a screwdriver, remove the room partition garnishes.

HINT:

Tape the screwdriver tip before use.

(d) Disconnect the connector, and remove the bolt and front seat outer belt floor anchor.

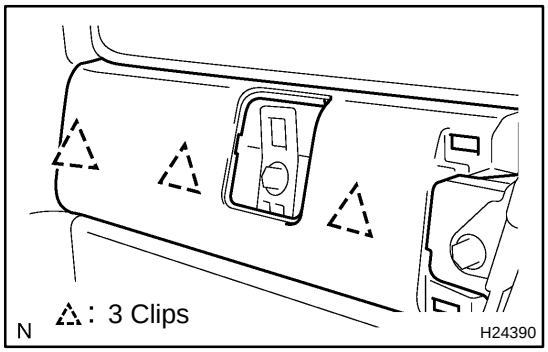

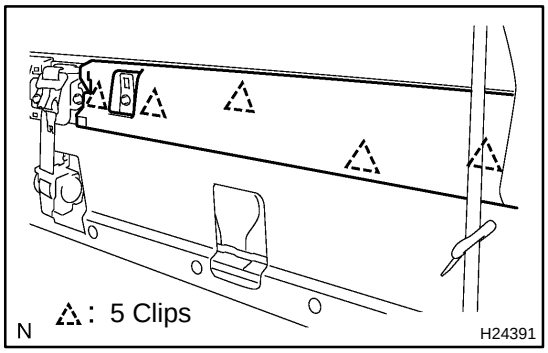

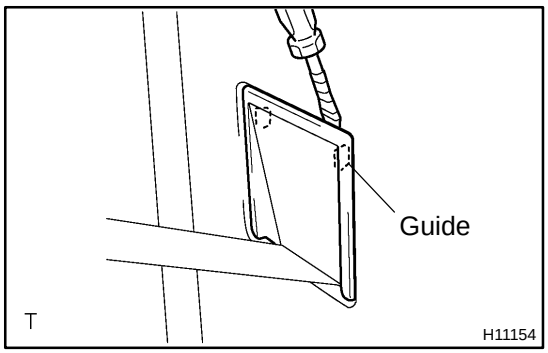

(e) Remove the quarter trim.

(1) Using a screwdriver, remove the quarter trim belt hole cover.

HINT:

Tape the screwdriver tip before use.

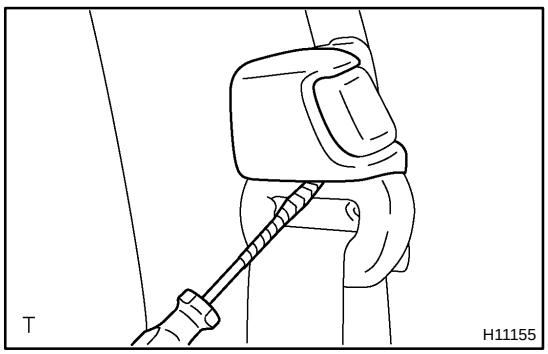

(2) Using a screwdriver, remove the cap.

HINT:

Tape the screwdriver tip before use.

(3) Remove the bolt and front seat outer belt shoulder anchor.

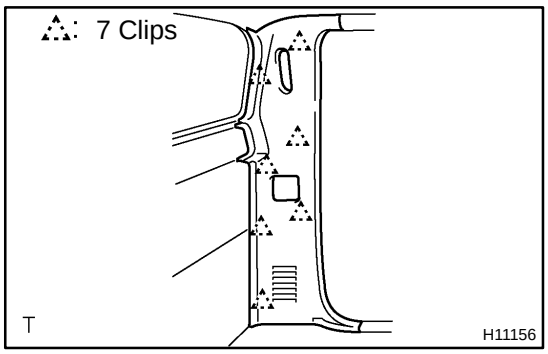

(4) Using a screwdriver, remove the quarter trim.

HINT:

Tape the screwdriver tip before use.

(f) Remove the retractor of the front seat outer belt.

CAUTION:

Never disassemble the front seat outer belt.

NOTICE:

When removing the retractor of the front seat outer belt, take care not to pull the seat belt pretensioner wire harness.

(1) Disconnect the pretensioner connector as shown in the illustration.

(2) Remove the 2 bolts and retractor of the front seat outer belt.

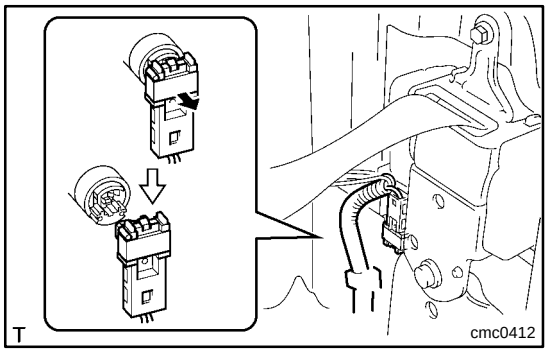

3. Access cab:

REMOVE FRONT SEAT OUTER BELT

(a) Remove the 4 screws and front door scuff plate.

(b) Remove the 3 screws and rear door scuff plate.

(c) Remove the bolt and front seat outer belt floor anchor.

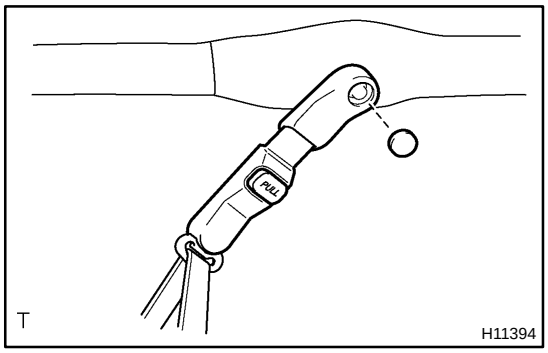

(d) Remove the front seat outer belt shoulder anchor.

(1) Using a screwdriver, remove the cap.

HINT:

Tape the screwdriver tip before use.

(2) Remove the bolt and front seat outer belt shoulder anchor.

(e) Remove the roof side rail garnish.

(1) Using a screwdriver, remove the caps.

HINT:

Tape the screwdriver tip before use.

(2) Using a torx® driver, remove the 2 torx® screws and assist grip.

Torx® driver:

T30 (Part No. 09041−00030 or locally manufactured tool)

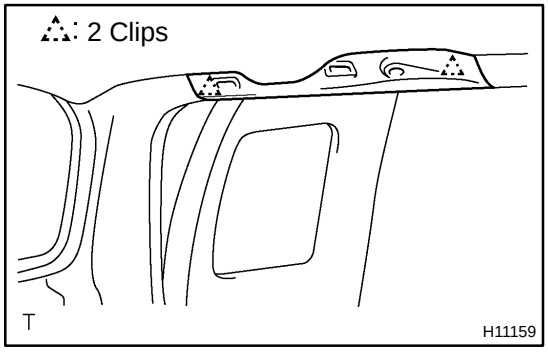

(3) Using a screwdriver, remove the roof side rail garnish.

HINT:

Tape the screwdriver tip before use.

(f) Remove the front door rear scuff plate and cover.

(1) Remove the clip and cover.

(2) Remove the clip and front door rear scuff plate.

(g) Remove the retractor of the front seat outer belt.

CAUTION:

Never disassemble the front seat outer belt.

NOTICE:
When removing the retractor of the front seat outer belt, take care not to pull the seat belt pretensioner wire harness.

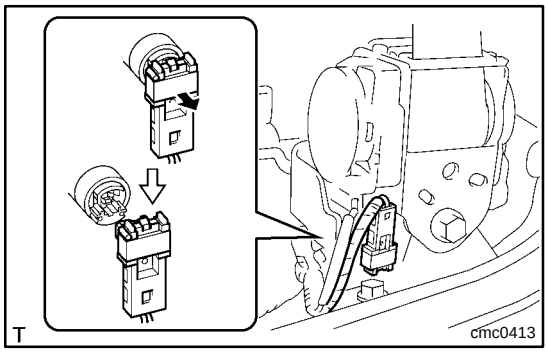

(1) Disconnect the pretensioner connector as shown in the illustration.
(2) Remove the 2 bolts and retractor of the front seat outer belt.

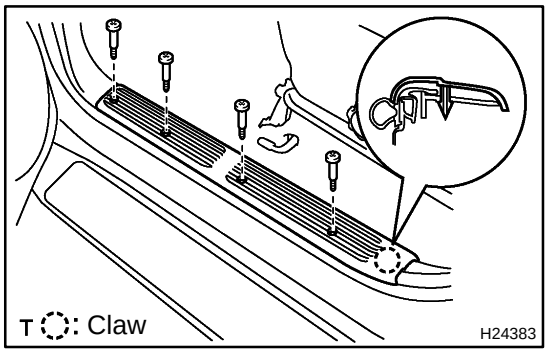

4. Double cab:
REMOVE FRONT SEAT OUTER BELT

(a) Remove the front door scuff plate.
(1) Remove the 4 screws, disengage the claw and front door scuff plate.
(2) Remove the front door opening trim weatherstrip.

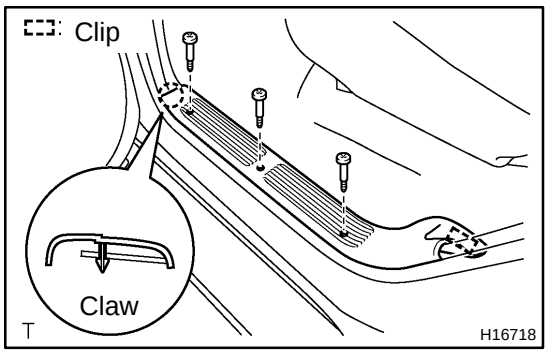

(b) Remove the rear door scuff plate.
(1) Remove the 3 screws.
(2) Using a screwdriver, disengage the clip and remove the rear door scuff plate.

HINT:
Tape the screwdriver tip before use.

(c) Remove the rear door opening trim weatherstrip.

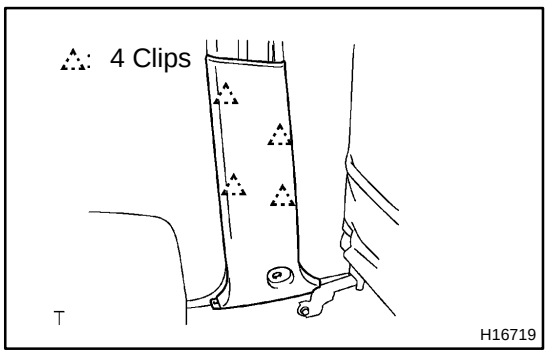

(d) Remove the lower center pillar garnish.
(1) Remove the front seat outer belt floor anchor.
(2) Using a screwdriver, remove the lower center pillar garnish.

HINT:
Tape the screwdriver tip before use.

(e) Remove the front seat outer belt shoulder anchor.

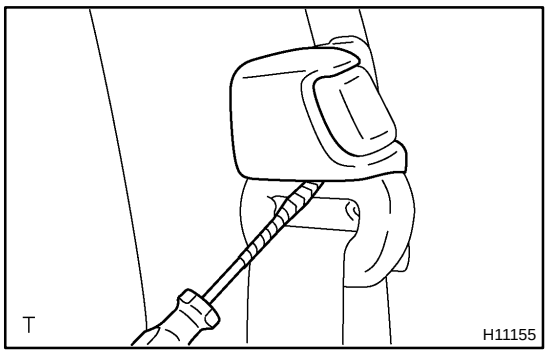

(1) Using a screwdriver, remove the cap.

HINT:

Tape the screwdriver tip before use.

(2) Remove the bolt and front seat outer belt shoulder anchor.

(f) Remove the retractor of front seat outer belt.

CAUTION:

Never disassemble the front seat outer belt.

NOTICE:

When removing the retractor of front seat outer belt, take care not to pull the seat belt pretensioner wire harness.

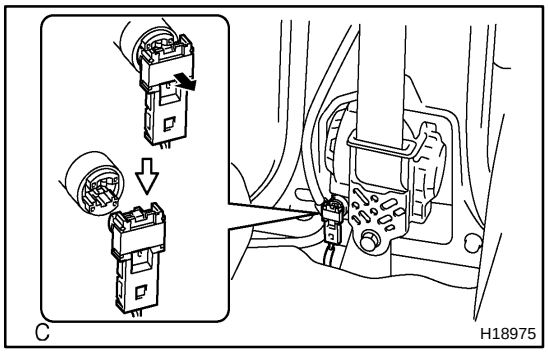

(1) Using a screwdriver, pull the locking button of the pretension connector to your side to release the lock.

HINT:

Tape the screwdriver tip before use.

(2) Disconnect the connector.

(3) Remove the 2 bolts and the front seat outer belt assembly.

BO0KP−04

REPLACEMENT

REQUIREMENTS FOR REPLACEMENT

In the following cases, replace the seat belt pretensioner.

- The seat belt pretensioner has been activated.
- The seat belt pretensioner has been found to be faulty during troubleshooting.
- The front seat outer belt has been found to be faulty while checking items 1−(b) or 2−(b) (see page BO−241).
- The front seat outer belt has been dropped.

CAUTION:

For removal and installation of the seat belt pretensioner, see pages BO−236 and BO−252. Be sure to follow the correct procedure.

SEAT BELT

COMPONENTS

BO4T1−03

Standard Cab

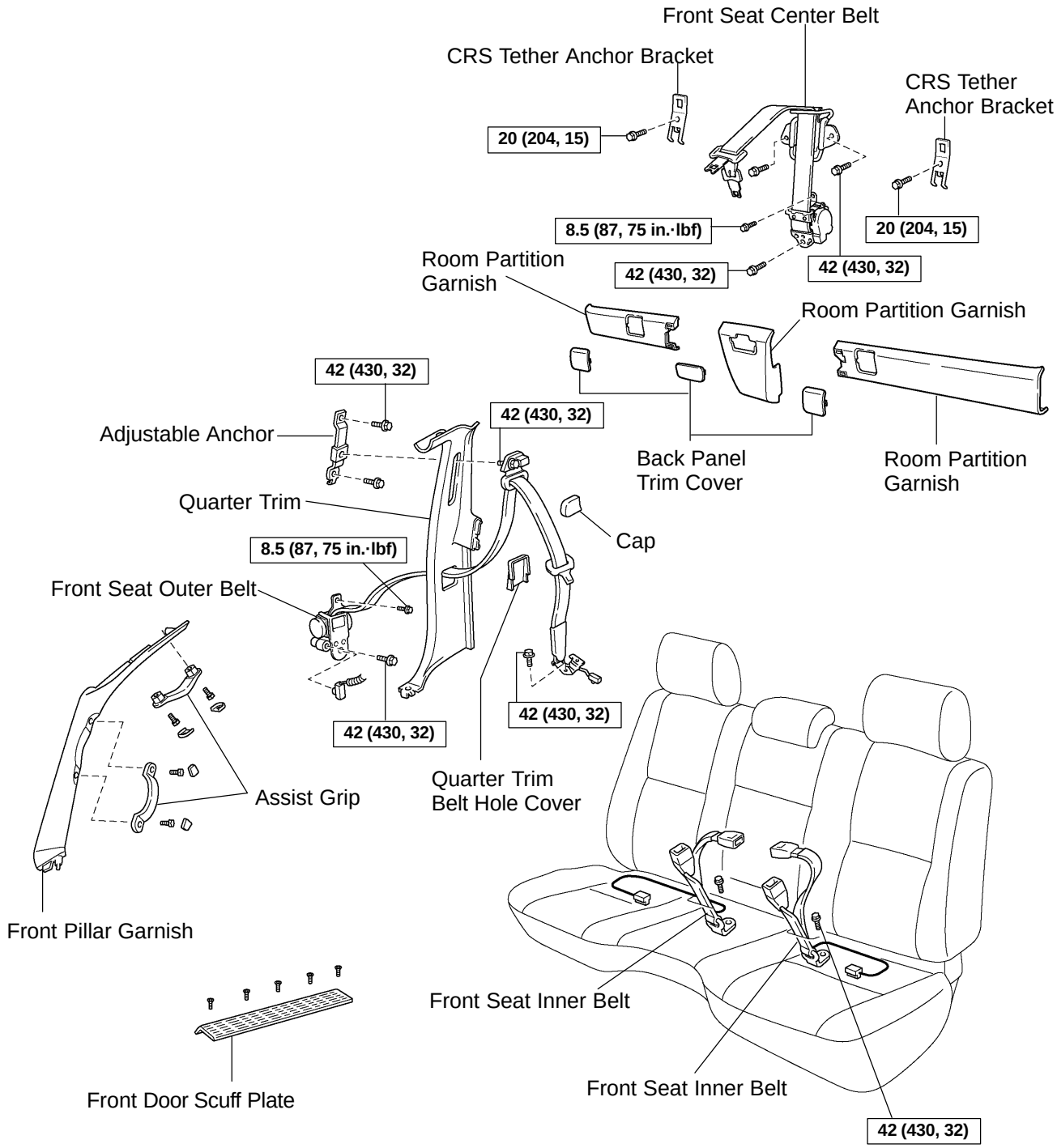

N·m (kgf·cm, ft·lbf) : Specified torque

N

cmc0411

Access Cab

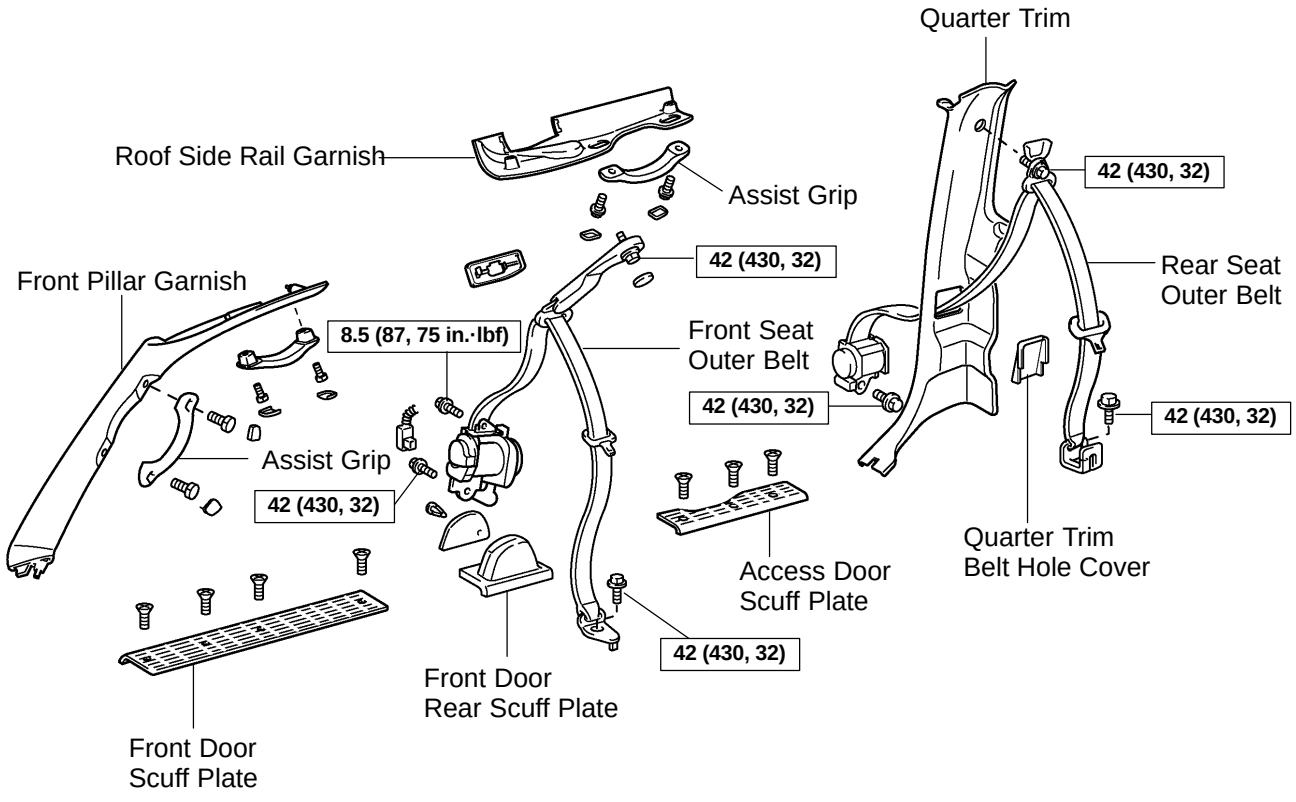

T

H24380

Access Cab

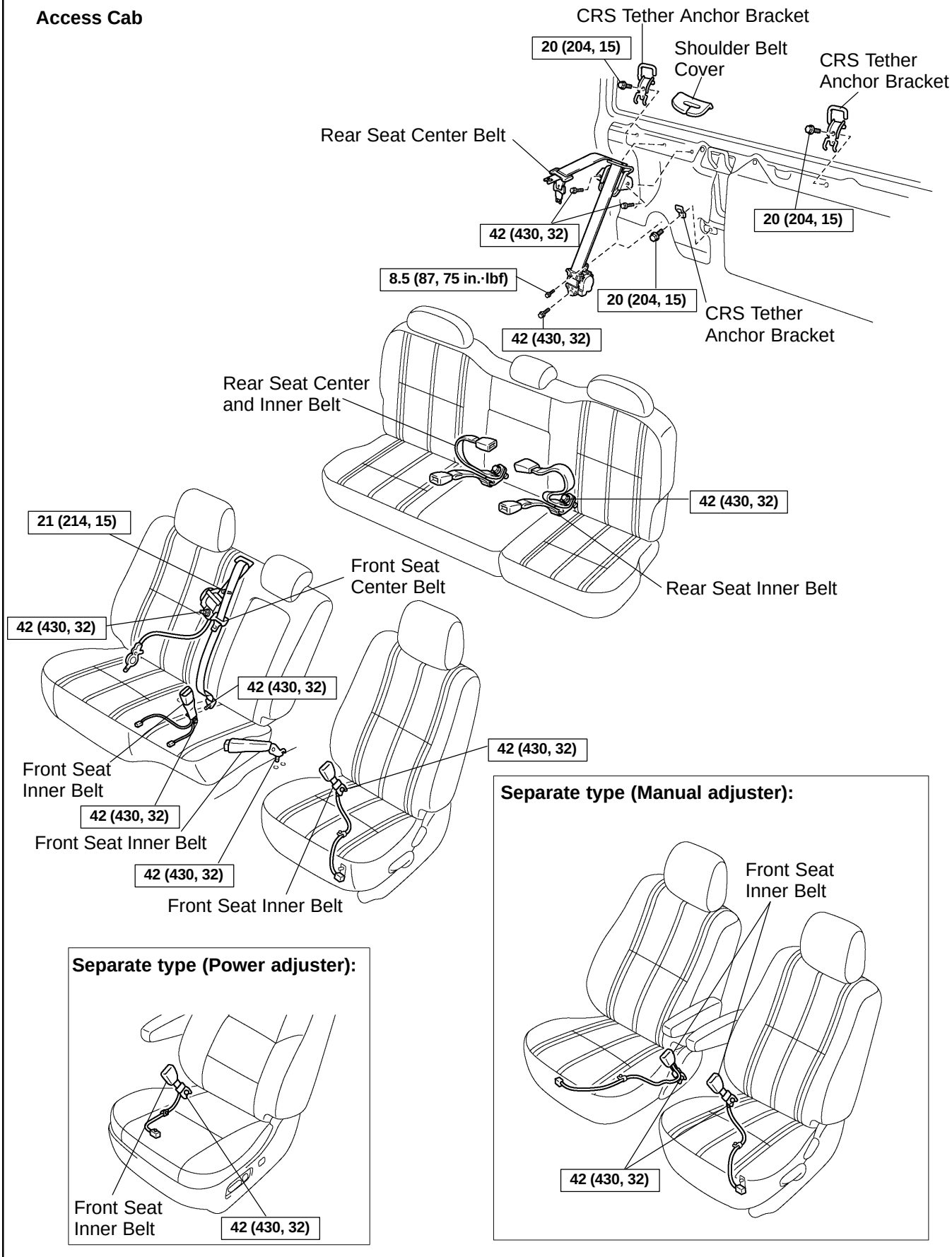

N

cmc0410

Double Cab

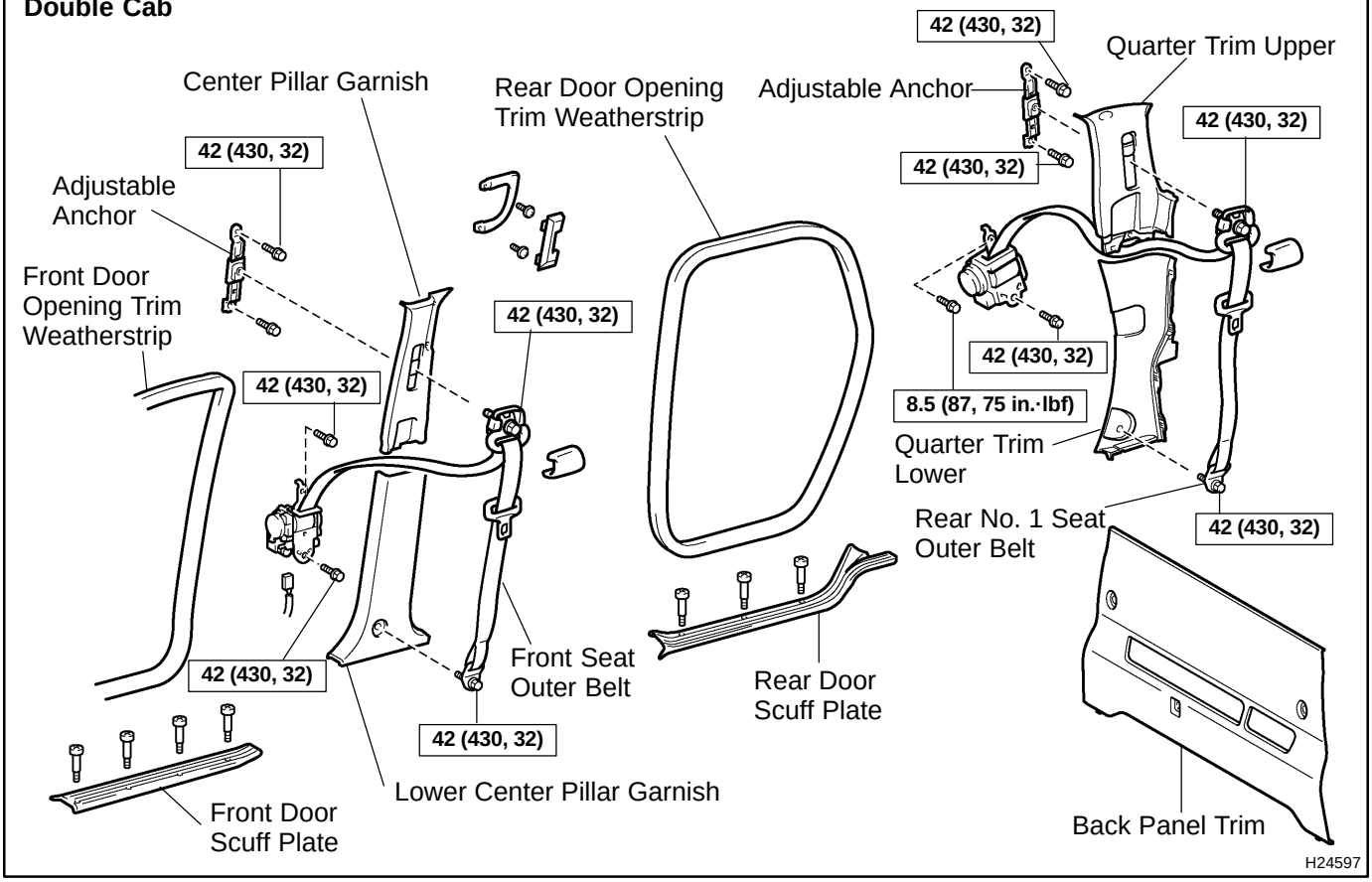
42 (430, 32)
Quarter Trim Upper
Center Pillar Garnish
Rear Door Opening Trim Weatherstrip
Adjustable Anchor
42 (430, 32)
42 (430, 32)
42 (430, 32)
Adjustable Anchor
Front Door Opening Trim Weatherstrip
42 (430, 32)
42 (430, 32)
42 (430, 32)
8.5 (87, 75 in.·lbf)
Quarter Trim Lower
Rear No. 1 Seat Outer Belt
42 (430, 32)
42 (430, 32)
Front Seat Outer Belt
Rear Door Scuff Plate
42 (430, 32)
Lower Center Pillar Garnish
Front Door Scuff Plate
Back Panel Trim
H24597

Double Cab

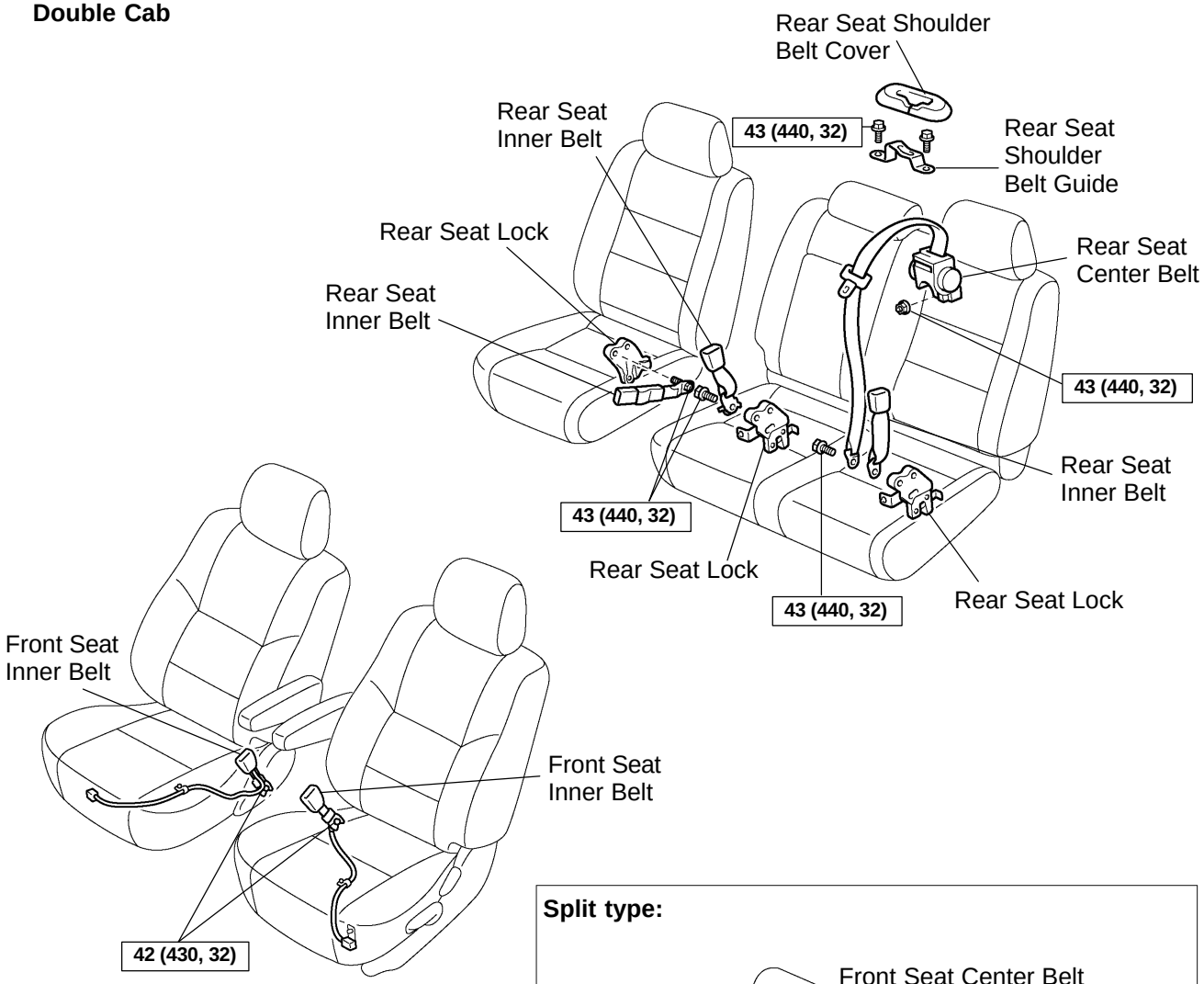

Split type:

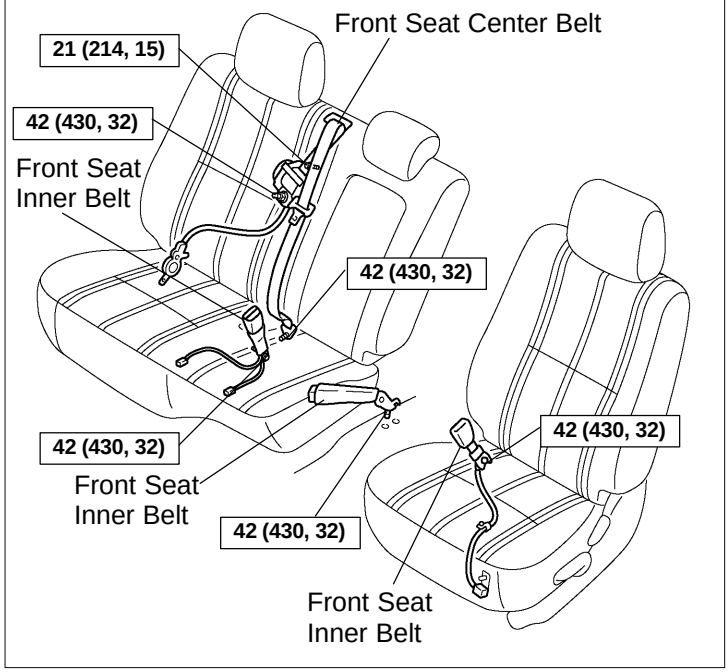

Separate type (Power adjuster):

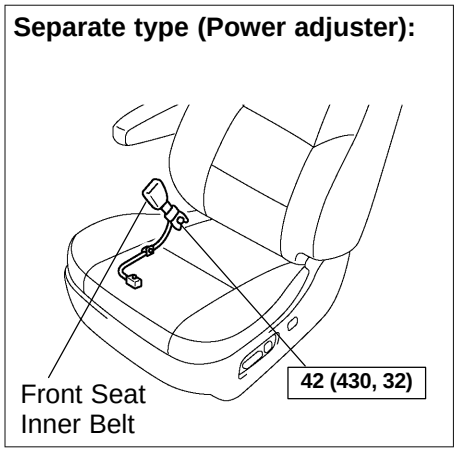

N·m (kgf·cm, ft·lbf) : Specified torque

cmc0409

BO4T2−01

INSPECTION

CAUTION:

Replace the seat belt assembly (outer belt, inner belt, bolts, nuts or sill−bar) if it has been used in a severe impact. The entire assembly should be replaced even if damage is not obvious.

1. Except manual type:
CONDUCT RUNNING TEST (IN SAFE AREA)

(a) Fasten the front seat belts.

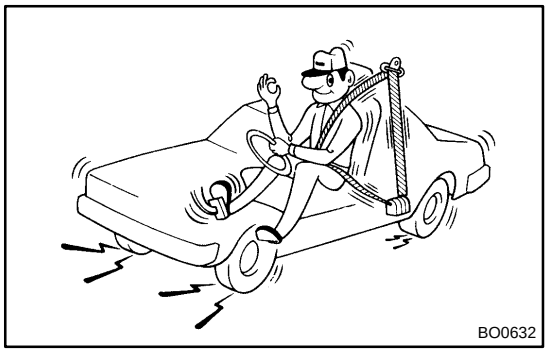
BO0632

(b) Drive the vehicle at 16 km/h (10 mph) and brake hard. Check that the belt locks and cannot be extended at this time.

HINT:

Conduct this test in a safe area. If the belt does not lock, remove the belt mechanism assembly and conduct the following static check. Also, whenever installing a new belt assembly, verify the proper operation before installation.

2. Driver seat belt (ELR):
STATIC TEST

(a) Make sure that the belt locks when pulled out quickly.
(b) Remove the locking retractor assembly.
(c) Tilt the retractor slowly.

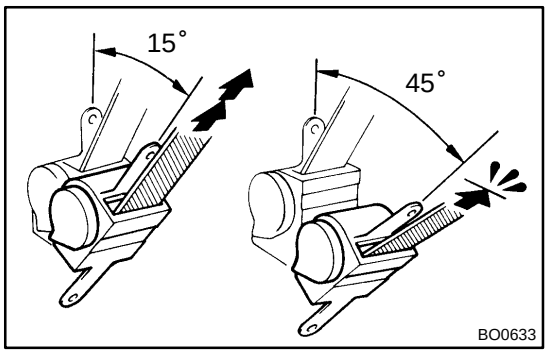

BO0633

(d) Make sure that the belt can be pulled out at a tilt of 15 degrees or less, and cannot be pulled out over 45 degrees.

If a problem is found, replace the assembly.

3. Except driver seat belt (ALR/ELR):
STATIC TEST

(a) Make sure that the belt locks when pulled out quickly.
(b) Pull out the whole belt, then retract the belt slightly and pull it out again.
(c) Make sure that the belt cannot be extended further.

If a problem is found, replace the assembly.

(d) Remove the locking retractor assembly.

HINT:

Front passenger's seat belt only:

Before removing the pretensioner connector, be sure to read the precautionary notice in the RS section.

(e) Tilt the retractor slowly.

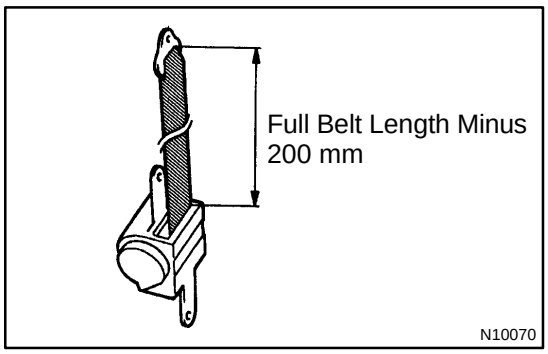

(f) Retract the whole belt, then pull out the belt until 200 mm (7.87 in.) of belt remains retracted.

(g) Tilt the retractor slowly.

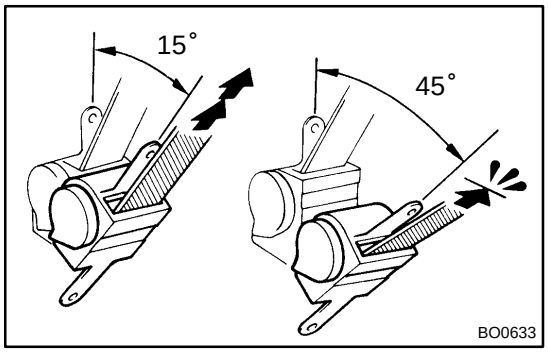

(h) Make sure that the belt can be pulled out at a tilt of 15 degrees or less, and cannot be pulled out at over 45 degrees.

If a problem is found, replace the assembly.

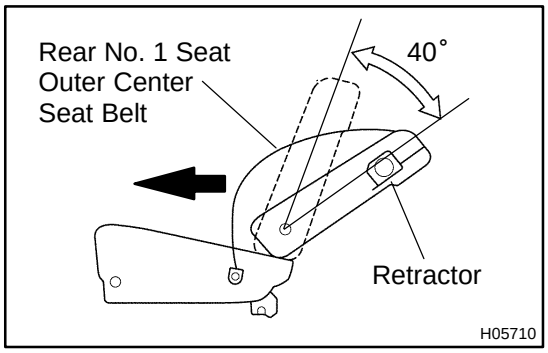

4. INSPECT REAR NO. 1 SEAT CENTER BELT

(a) After extracting 300 mm (11.81 in.), check that the belt locks when suddenly extracted.

(b) Check that the belt can be extracted 300 mm (11.81 in.) without being locked when the seat is reclined as shown in the illustration.

(c) Check that the belt is locked when the belt is extracted by a certain amount under condition (a).

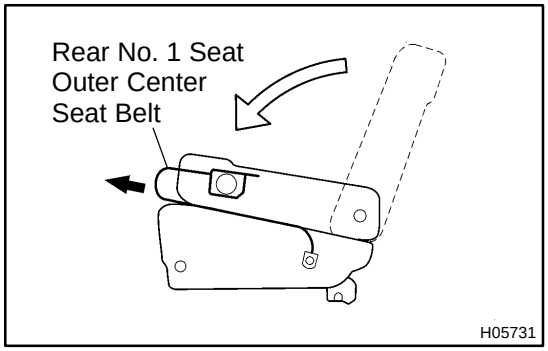

(d) When folding down the seatback forward and extracting the seat belt slowly, check that the belt is locked after a certain length (approximately 500 mm (19.69 in.)) of the belt has been extracted.

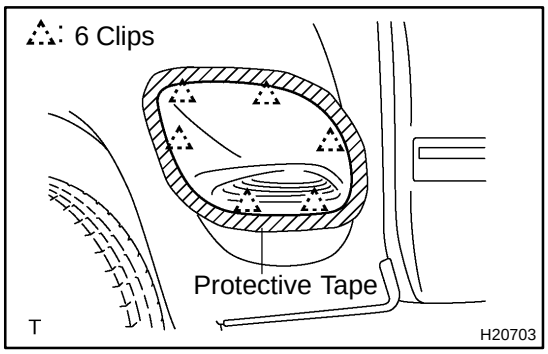

SIDE STEP

BO4H5−02

REPLACEMENT

REMOVE SIDE FRONT STEP

Using a screwdriver, remove the side front step.

HINT:

Tape the screwdriver tip before use.

NOTICE:

- **Do not damage the body.**
- **If the clips are damaged, exchange them for new clips.**

BO4QB−01

ADJUSTMENT

ADJUST SLIDING ROOF GLASS IN CLEARANCE

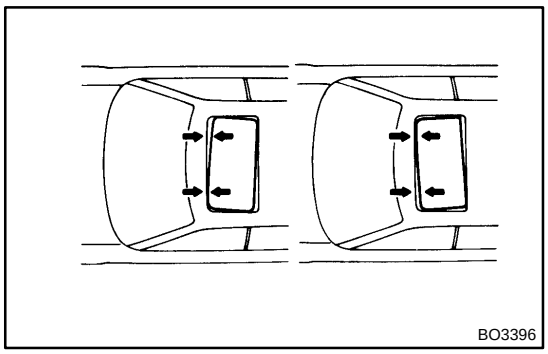

(a) When the front or rear/left or right alignment is not correct, remove the drive gear and sliding roof glass, then adjust the drive cable.

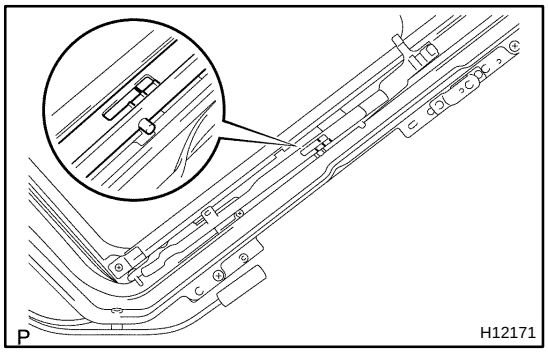

NOTICE:

Remove the drive gear with the sliding roof fully closed.

(b) Adjust by sliding the cable forward or rearward or rearward to align the 2 marks as shown.

(c) Install the driving ear and sliding roof glass.

BO4Q7−01

COMPONENTS

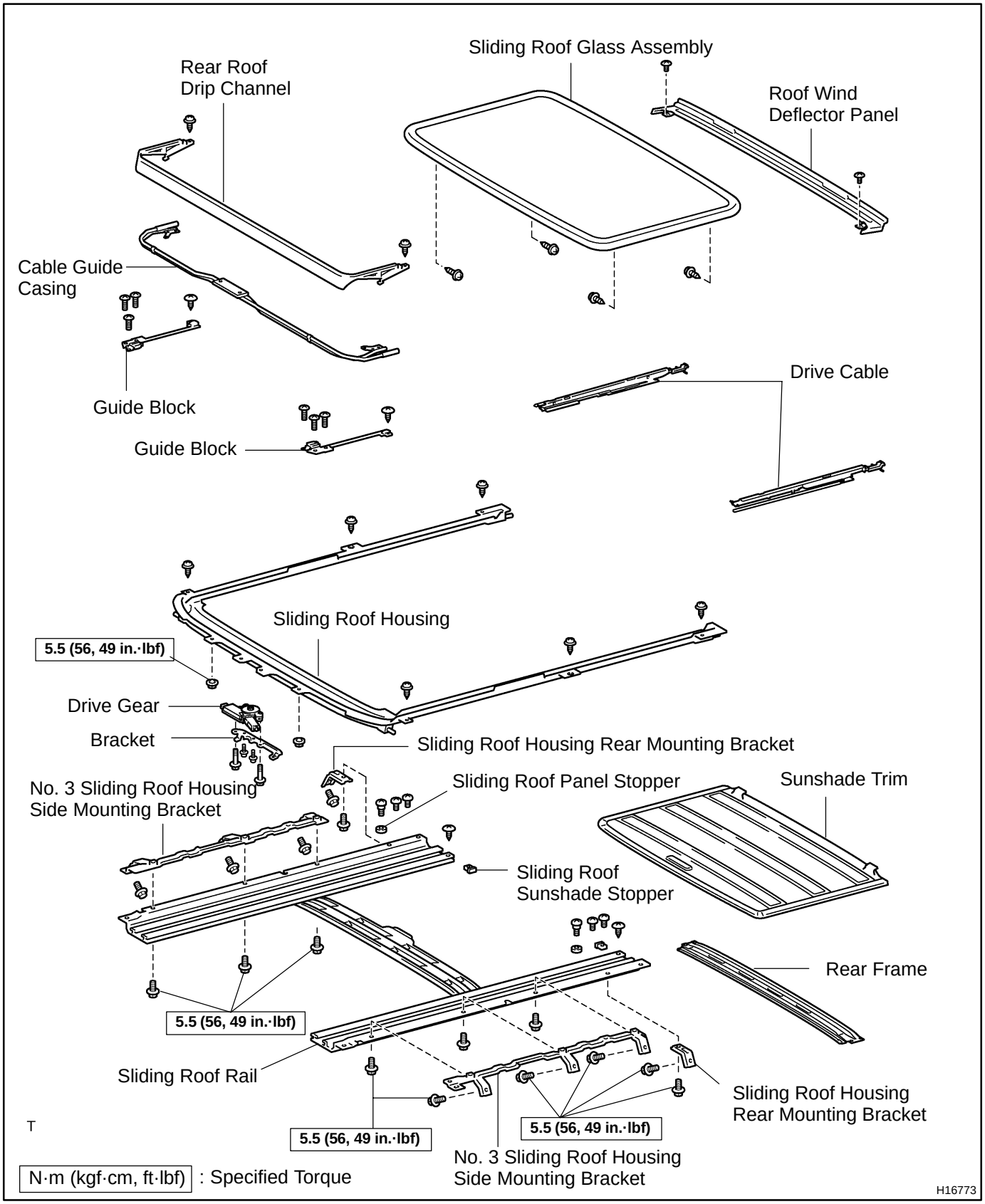

BO4QA−02

DISASSEMBLY

1. REMOVE NO. 3 SLIDING ROOF HOUSING SIDE MOUNTING BRACKETS

2. REMOVE SLIDING ROOF HOUSING REAR MOUNTING BRACKETS

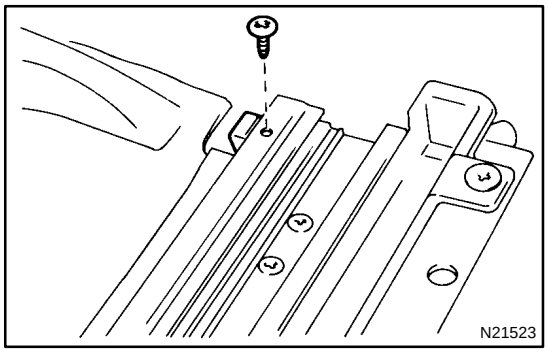

3. REMOVE SLIDING ROOF SUNSHADE STOPPER

(a) Remove the screw and stopper.

(b) Perform the same procedure on the other side.

4. REMOVE SUNSHADE TRIM

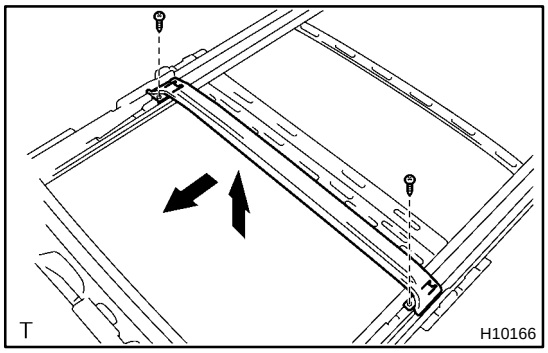

5. REMOVE REAR ROOF DRIP CHANNEL

Remove the 2 screws and rear roof drip channel as shown in the illustration.

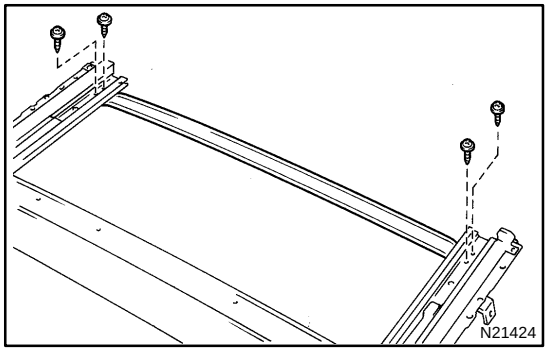

6. REMOVE REAR FRAME

Remove the 4 screws and rear frame.

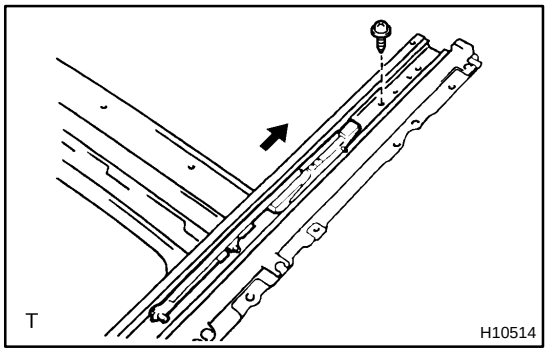

7. REMOVE DRIVE CABLE

(a) Remove the screw and sliding roof panel stopper.

(b) Slide the drive cable rearward, then remove it.

(c) Perform the same procedure on the other side.

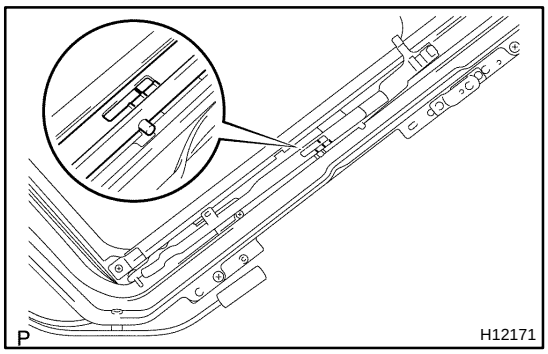

HINT:
At the time of reassembly, please refer to the following items.
- Adjust the drive cable to a closed and tilted down position.
- Slide the cable forward or backward to align the 2 marks as shown in the illustration.
- Slide the cable to the forefront with your hand.

8. REMOVE ROOF WIND DEFLECTOR PANEL

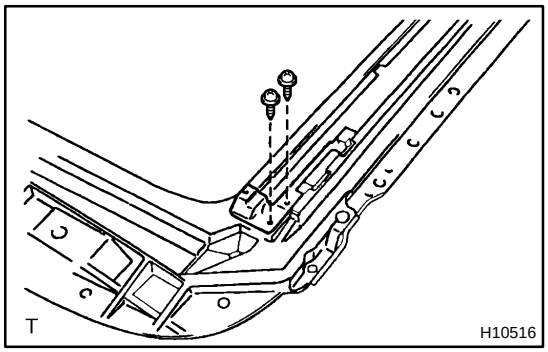

9. REMOVE GUIDE BLOCK

(a) Remove the 2 screws and guide block.

(b) Perform the same procedure on the other side.

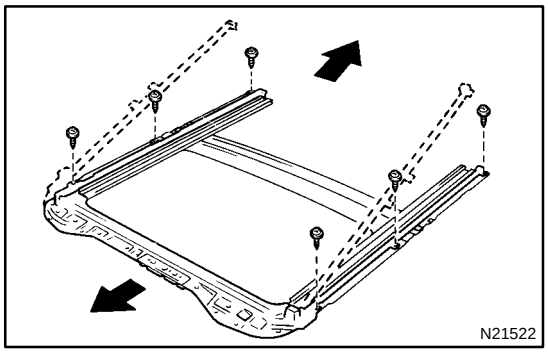

10. REMOVE SLIDING ROOF HOUSING

Remove the 6 screws and sliding roof housing.

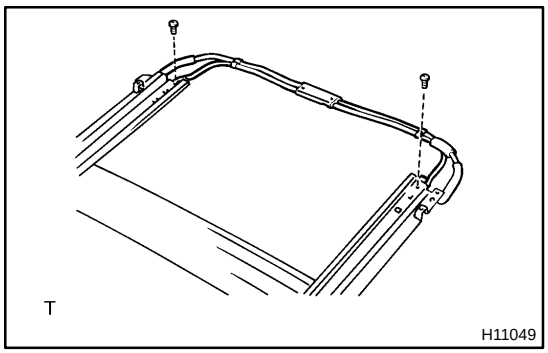

11. REMOVE CABLE GUIDE CASING

Remove the 2 screws and cable guide casing.

BO4QD−02

INSTALLATION

Installation is in the reverse order of removal (see page BO−100).

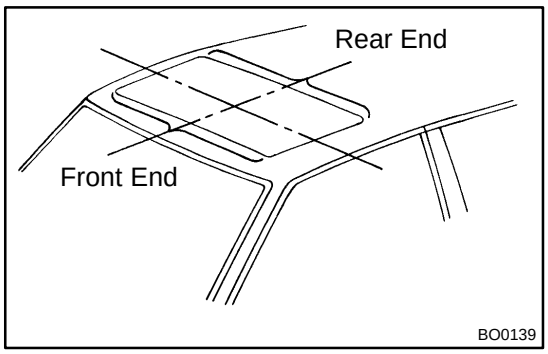

SLIDING ROOF

BO4Q8−01

ON−VEHICLE INSPECTION

INSPECT SLIDING ROOF GLASS ALIGNMENT

(a) Start the engine and check the operation time of the sliding roof.
Operation time:
Approx. 6 secs.

(b) Check for abnormal noise or binding during operation.

(c) With the sliding roof fully closed, check for water leakage.

(d) Check for a difference in level between the sliding roof weatherstrip and roof panel.
Front end:
0 − 2.0 mm (0 − 0.079 in.)
0 + 1.0 mm (0 + 0.039 in.)
Side end:
0 ± 1.5 mm (0 ± 0.059 in.)
Rear end:
0 − 1.0 mm (0 − 0.039 in.)
0 + 2.0 mm (0 + 0.079 in.)

BO4QC−02

REASSEMBLY

Reassembly is in the reverse order of disassembly (see page BO−101).

BO4Q9−01

REMOVAL

HINT:

A bolt without a torque specification is shown in the standard bolt chart (see page SS−2).

1. REMOVE ROOF HEADLINING (See page BO−133)

2. REMOVE SLIDING ROOF GLASS ASSEMBLY

(a) Using a torx wrench, remove the 4 screws.

(b) Pull the glass upward to remove it.

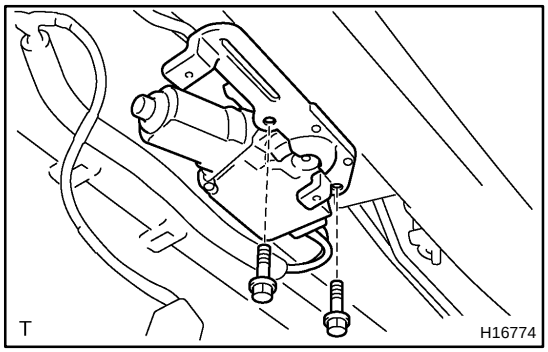

3. REMOVE DRIVE GEAR

NOTICE:

Remove the drive gear with the sliding roof fully closed.

(a) Disconnect the connector.

(b) Remove the 2 bolts and drive gear.

(c) Remove the 2 screws and drive gear bracket.

4. REMOVE SLIDING ROOF HOUSING

(a) Disconnect the 4 drain hoses from the housing.

(b) Disengage the wire harness clamps.

(c) Remove the 8 bolts, 2 nuts and sliding roof housing.

Torque: 5.5 N·m (56 kgf·cm, 49 in.·lbf)

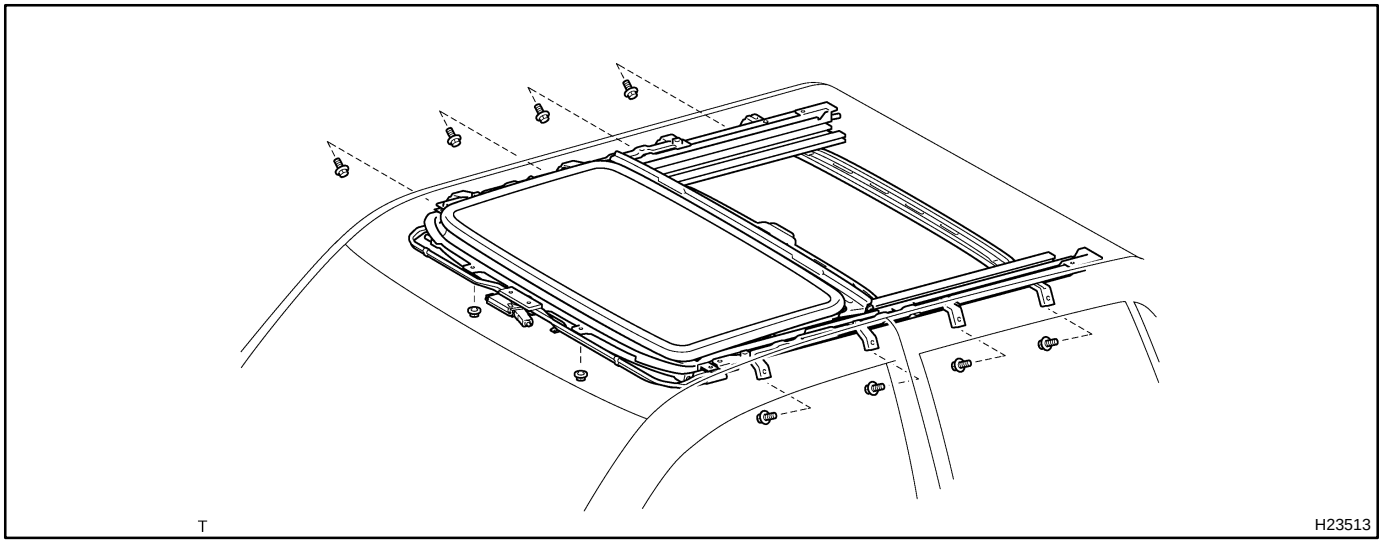

SRS AIRBAG

BO0HY−06

PRECAUTION

The TOYOTA TUNDRA is equipped with an SRS (Supplemental Restraint System) such as the driver airbag and front passenger airbag. Failure to carry out service operation in the correct sequence could cause the SRS to unexpectedly deploy during servicing, possibly leading to a serious accident. Before servicing (including removal or installation of parts, inspection or replacement), be sure to read the precautionary notices in the RS section.

TAIL GATE

BO0J7−07

COMPONENTS

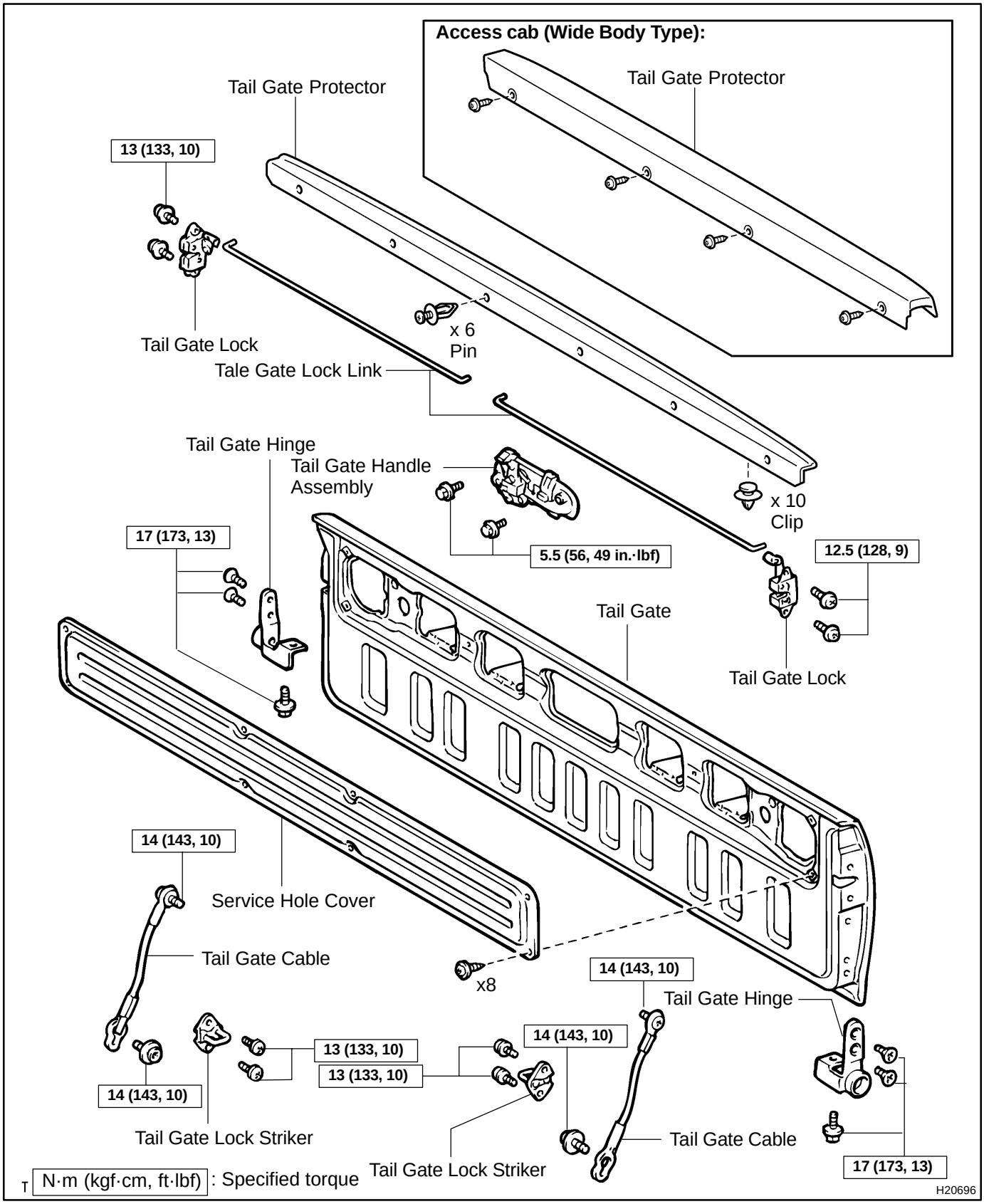

BO0J9−08

INSTALLATION

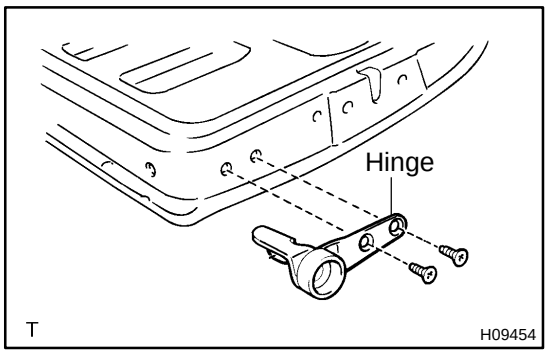

1. INSTALL TAIL GATE

(a) Using a torx® socket wrench (T40), install the tail gate hinges to the tail gate with the 4 screws.
Torque: 17 N·m (178 kgf·cm, 13 ft·lbf)

(b) Install the tail gate to the body with the 2 bolts.
Torque: 17 N·m (178 kgf·cm, 13 ft·lbf)

NOTICE:
Be careful not to drop the tail gate.

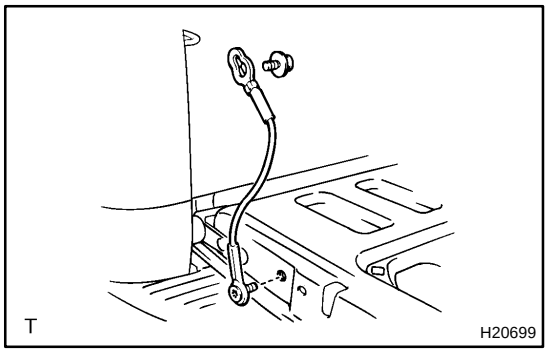

2. INSTALL TAIL GATE CABLE

(a) Install the tail gate cable and gate side shaft to the tail gate.
Torque: 14 N·m (143 kgf·cm, 10 ft·lbf)

(b) Install the tail gate cable and deck side shaft to the body.
Torque: 14 N·m (143 kgf·cm, 10 ft·lbf)

(c) Use the same procedures described above to the other side.

3. INSTALL TAIL GATE LOCK STRIKER

Using a torx® socket wrench (T40), install the 2 tail gate lock strikers with the 4 screws.
Torque: 13 N·m (133 kgf·cm, 10 ft·lbf)

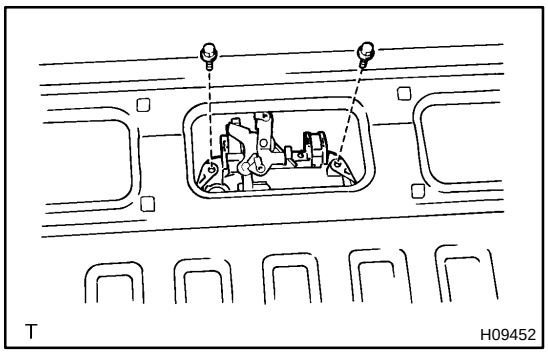

4. INSTALL TAIL GATE HANDLE ASSEMBLY

Install the tail gate handle assembly with the 2 bolts.
Torque: 5.5 N·m (56 kgf·cm, 49 in.·lbf)

5. INSTALL TAIL GATE LOCK

(a) Using a torx® socket wrench (T40), install the 2 tail gate locks with the 4 screws.
Torque: 12.5 N·m (128 kgf·cm, 9 ft·lbf)

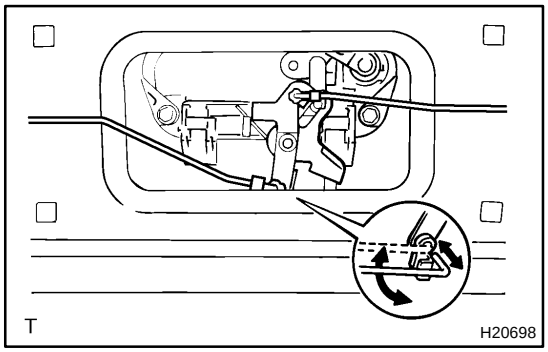

(b) Connect one end of the tail gate lock link to the tail gate lock and another end to the tail gate handle assembly.

6. INSTALL SERVICE HOLE COVER

Using a torx® socket wrench (T30), install the service hole cover with the 8 screws.

7. INSTALL TAIL GATE PROTECTOR (See page BO−68)

BO2F7−06

REMOVAL

HINT:

A bolt without a torque specification is shown in the standard bolt chart (see page SS−2).

1. REMOVE TAIL GATE PROTECTOR (See page BO−66)

2. REMOVE SERVICE HOLE COVER

Using a torx® socket wrench (T30), remove the 8 screws and service hole cover.

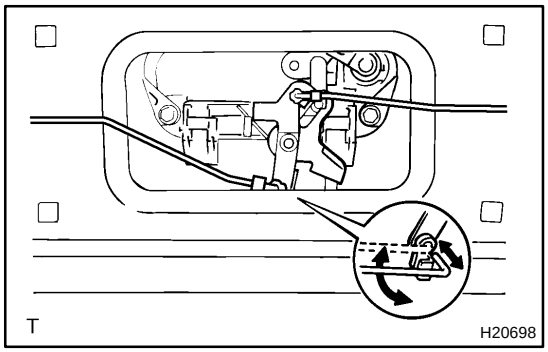

3. REMOVE TAIL GATE LOCK

(a) Remove the 2 tail gate lock links from the tail gate locks and tail gate handle assembly.

(b) Using a torx® socket wrench (T40), remove the 4 screws and 2 tail gate locks.

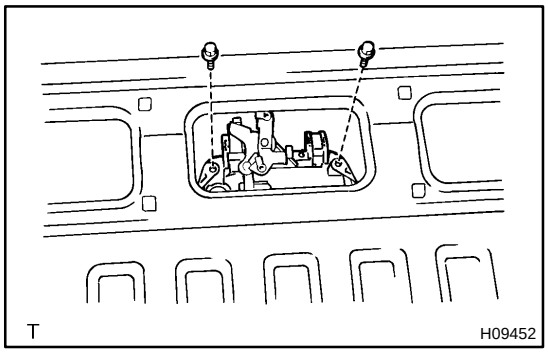

4. REMOVE TAIL GATE HANDLE ASSEMBLY

Remove the 2 bolts and tail gate handle assembly.

5. REMOVE TAIL GATE LOCK STRIKERS

Using a torx® socket wrench (T40), remove the 4 screws and tail gate lock strikers.

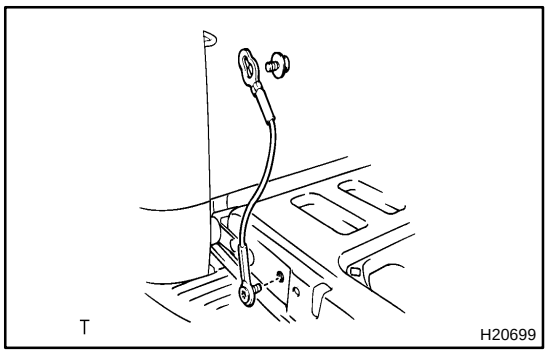

6. REMOVE TAIL GATE CABLE

(a) Remove the deck side shaft and tail gate cable from the deck.

(b) Remove the gate side shaft and tail gate cable.

(c) Use the same proedures described above to the other side.

7. REMOVE TAIL GATE

(a) Remove the 2 bolts and tail gate.

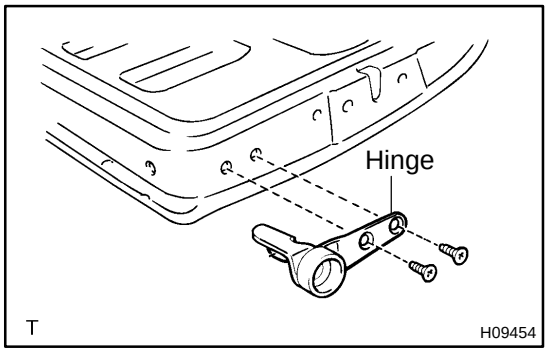

NOTICE:

Be careful not to drop the tail gate.

(b) Using a torx® socket wrench (T40), remove the 6 screws and 2 tail gate hinges from the tail gate.

WHEEL ARCH MOULDING

BO0IF−05

COMPONENTS

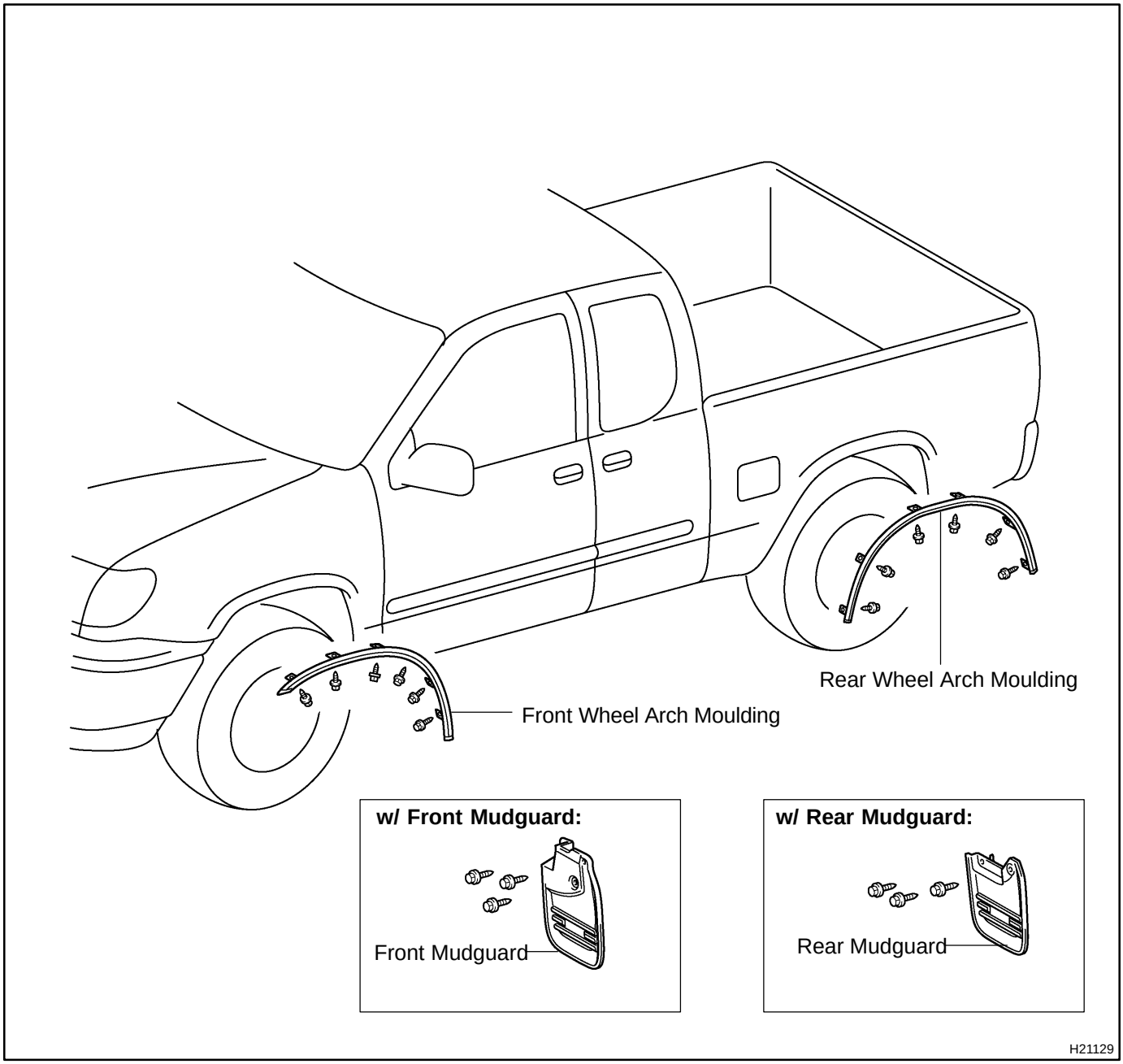

WINDSHIELD

COMPONENTS

BO4Q2−01

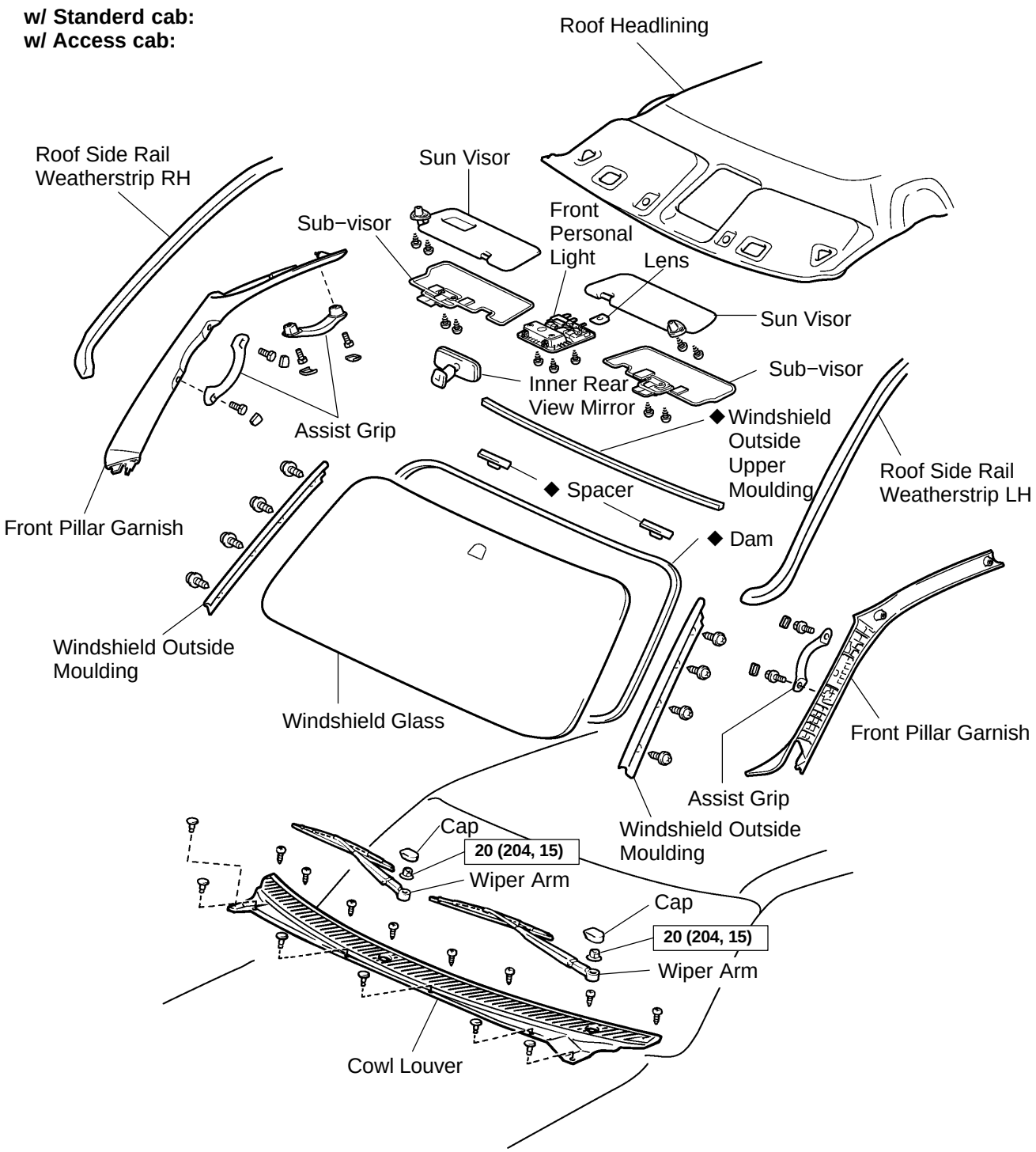

N·m (kgf·cm, ft·lbf) : Specified torque

T ◆ Non−reusable part

H11397

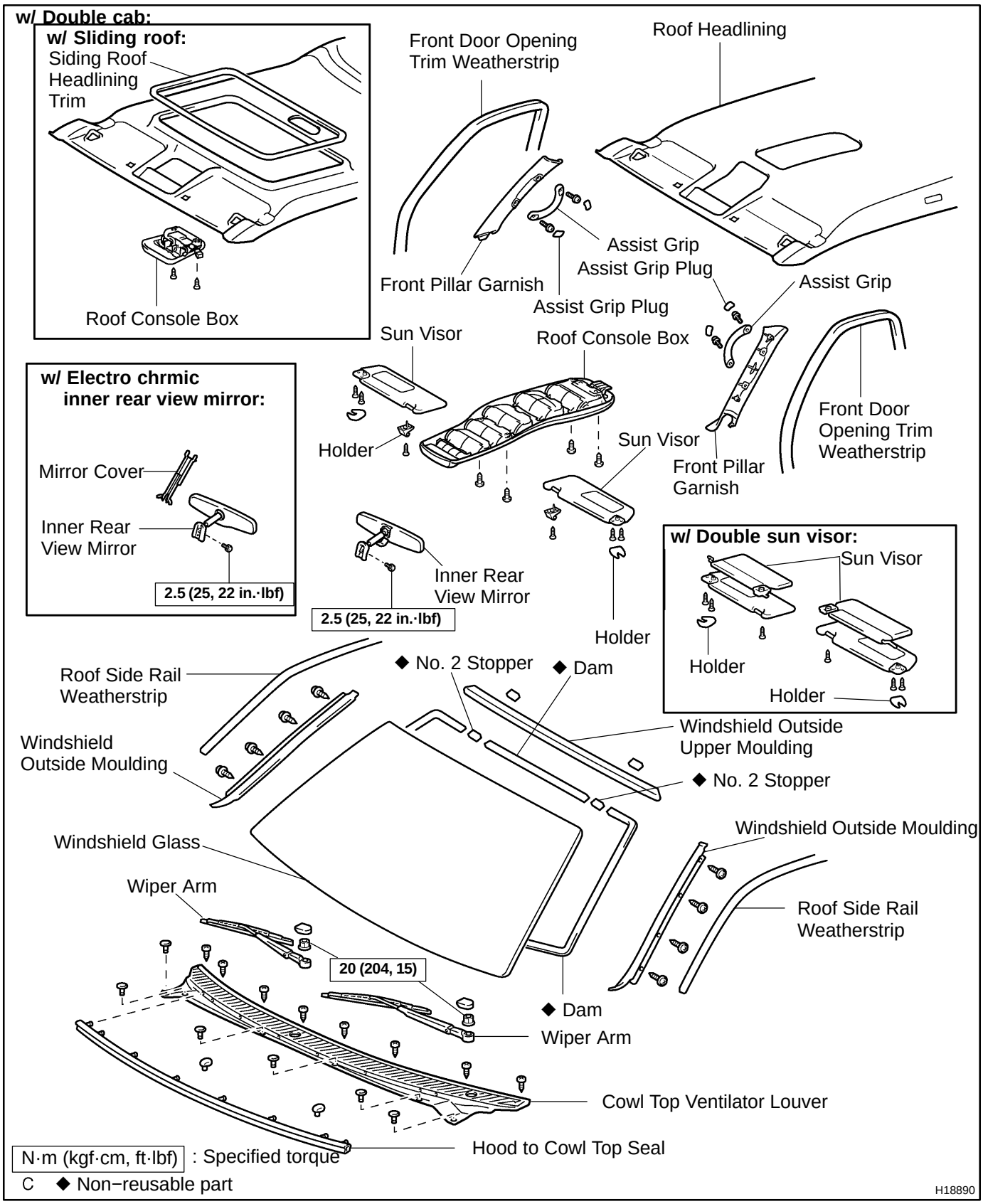
w/ Double cab:
w/ Sliding roof:
Siding Roof Headlining Trim
Roof Console Box
Front Door Opening Trim Weatherstrip
Front Pillar Garnish
Assist Grip
Assist Grip Plug
Assist Grip Plug
Roof Headlining
Assist Grip
Front Door Opening Trim Weatherstrip
Sun Visor
Roof Console Box
Holder
Sun Visor
Front Pillar Garnish
w/ Electro chrmic inner rear view mirror:
Mirror Cover
Inner Rear View Mirror
2.5 (25, 22 in.·lbf)
Inner Rear View Mirror
2.5 (25, 22 in.·lbf)
Holder
w/ Double sun visor:
Sun Visor
Holder
Holder
Roof Side Rail Weatherstrip
◆ No. 2 Stopper
◆ Dam
Windshield Outside Upper Moulding
Windshield Outside Moulding
◆ No. 2 Stopper
Windshield Glass
Windshield Outside Moulding
Wiper Arm
Roof Side Rail Weatherstrip
20 (204, 15)
◆ Dam
Wiper Arm
Cowl Top Ventilator Louver
Hood to Cowl Top Seal
N·m (kgf·cm, ft·lbf) : Specified torque
C ◆ Non−reusable part
H18890

BO4Q4−02

INSTALLATION

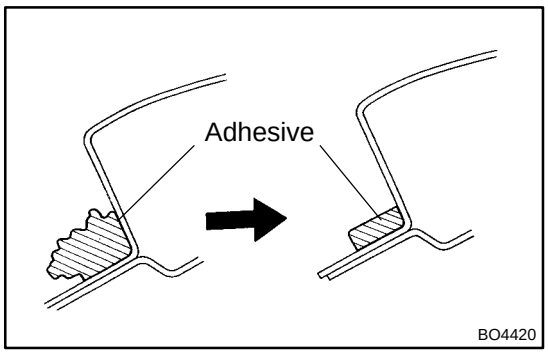

1. CLEAN AND SHAPE CONTACT SURFACE OF BODY

(a) Using a knife, cut away any rough areas on the body.

HINT:

Leave as much of the adhesive on the body as possible.

(b) Clean the cutting surface of the adhesive with a shop rag saturated in cleaner.

HINT:

Even if all the adhesive has been removed, clean the body.

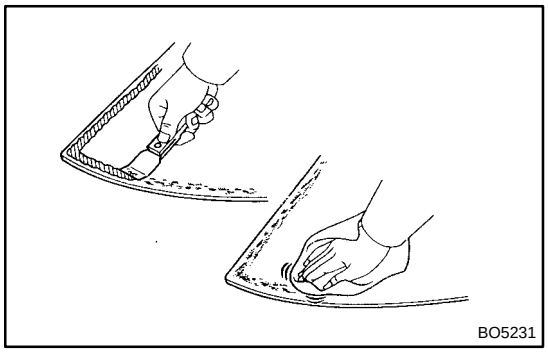

2. CLEAN REMOVED GLASS

(a) Remove the damaged stoppers and dam.

(b) Using a scraper, remove the adhesive sticking to the glass.

(c) Clean the glass with cleaner.

NOTICE:

- **Be careful not to damage the glass.**
- **Do not touch the glass face after cleaning it.**

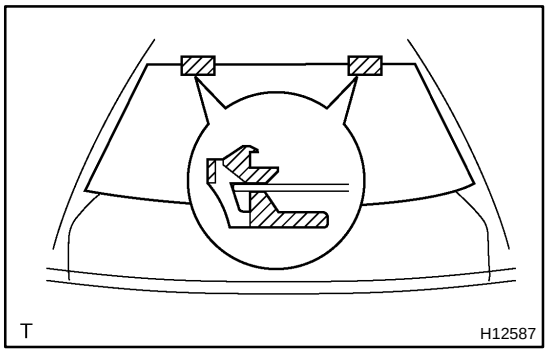

3. w/ No. 1 stopper:
REPLACE NO. 1 STOPPERS

(a) Remove the damaged stoppers.

(b) Cut off the old adhesive around the stopper installation area.

NOTICE:

Be careful not to damage the body.

(c) Clean the installation area.

(d) Attach new stoppers to the body so that the notches on the body will align with the stoppers as shown in the illustration.

HINT:

Make sure that the stoppers are installed facing the correct direction.

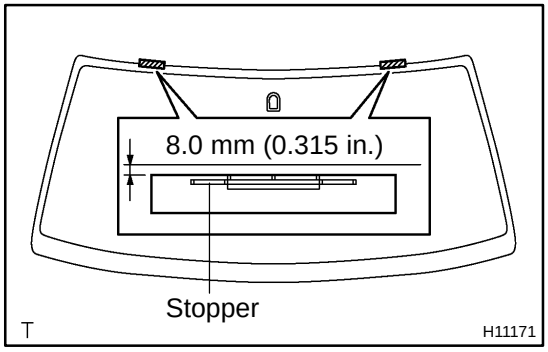

4. INSTALL NEW STOPPERS

Attach new stoppers to the glass with the ceramic notches on the glass aligned with the stoppers as shown in the illustration.

HINT:

Make sure that the stoppers are installed facing the correct direction.

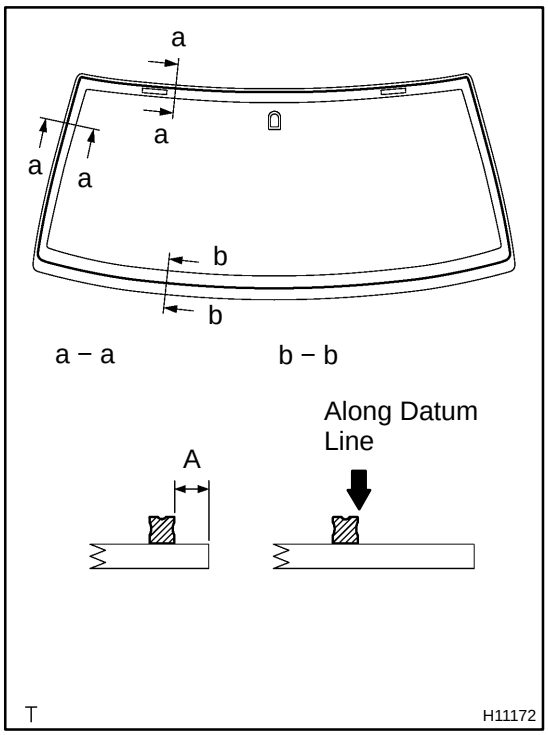

5. INSTALL NEW DAM

Install a new dam with double−stick tape as shown in the illustration.

A: 7.0 mm (0.276 in.)

NOTICE:

Do not touch the glass surface after cleaning it.

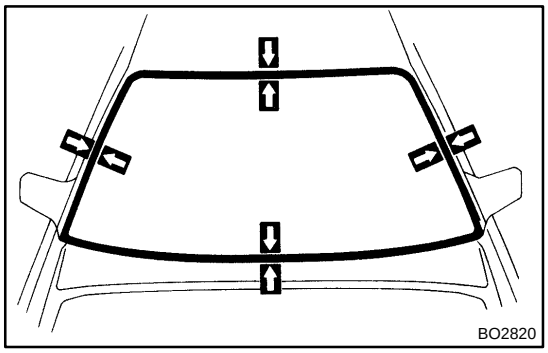

6. POSITION GLASS

(a) Place the glass in the correct position.
(b) Check that all contacting parts of the glass rim are perfectly even.
(c) Place reference marks between the glass and body.
(d) Remove the glass.

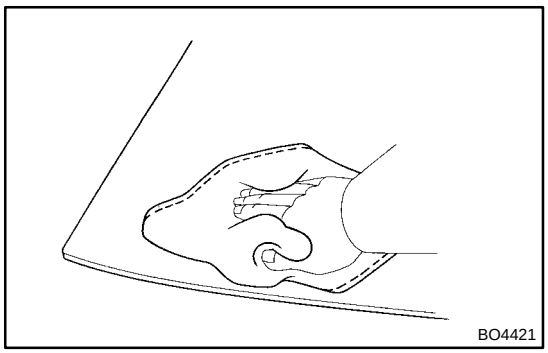

7. CLEAN CONTACT SURFACE OF GLASS

Using a cleaner, clean the contact surface which is black−colored area around the entire glass rim.

NOTICE:

Do not touch the glass face after cleaning it.

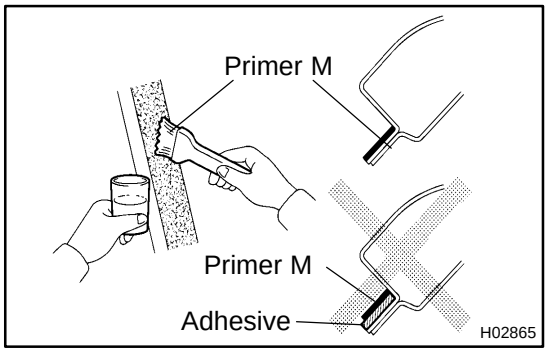

8. COAT CONTACT SURFACE OF BODY WITH PRIMER ”M”

Using a brush, coat Primer M to the exposed part of body on the vehicle side.

NOTICE:

- **Let the primer coating dry for 3 minutes or more.**
- **Do not coat Primer M to the adhesive.**
- **Do not keep any of the opened Primer M for later use.**

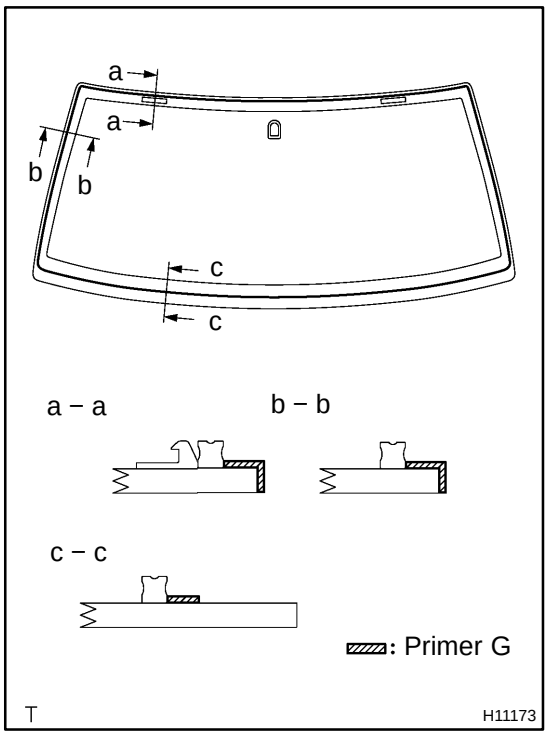

9. COAT CONTACT SURFACE OF GLASS WITH PRIMER "G"

(a) Using a brush or sponge, coat the edge of the glass and the contact surface with Primer G.

(b) When the primer is coated wrongly to the area other than the specified, wipe it off with a clean shop rag before the primer dries.

NOTICE:

- **Let the primer coating dry for 3 minutes or more.**
- **Do not keep any of the opened Primer G for later use.**

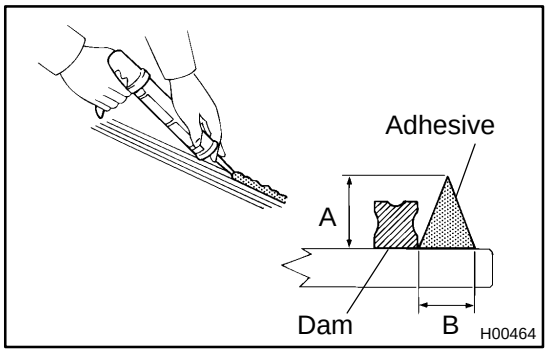

10. APPLY ADHESIVE

(a) Cut off the tip of the cartridge nozzle.
Part No. 08850−00801 or equivalent

HINT:

After cutting off the tip, use all adhesive within the time described in the table below.

Temperature	Tackfree time
35 ˚C (95 ˚F)	15 minutes
20 ˚C (68 ˚F)	100 minutes
5 ˚C (41 ˚F)	8 hours

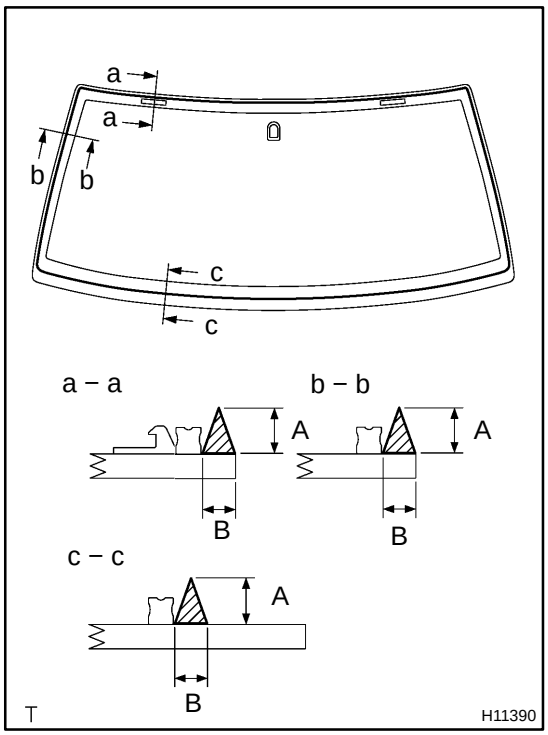

(b) Load the cartridge into the sealer gun.
(c) Coat the glass with adhesive as shown in the illustration.
A: 12 mm (0.47 in.)
B: 8 mm (0.31 in.)

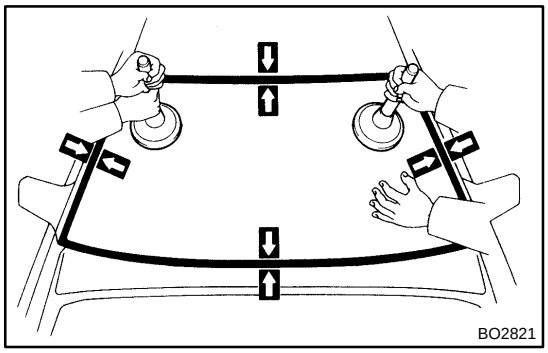

11. INSTALL WINDSHIELD GLASS AND MOULDING
(a) Install the glass, aligning the reference marks using a suction rubber.
HINT:
Check that stoppers engage correctly viewing.
(b) Lightly press the glass front surface for close contact.

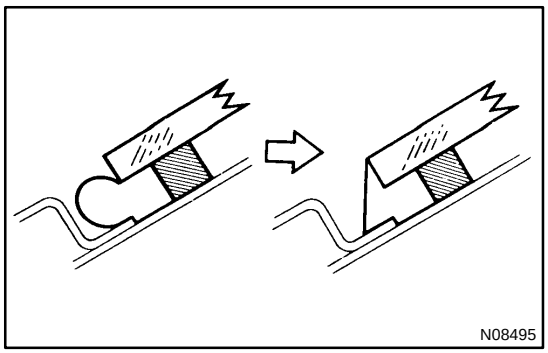

(c) Correct insufficient or protruded adhesive agent using a spatula.
HINT:
Apply the adhesive agent up to the windshield glass edge.

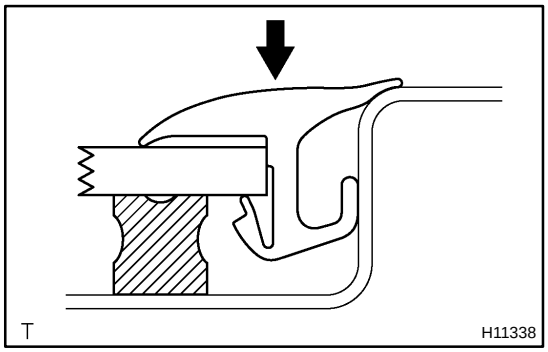

(d) Install a new windshield outside upper moulding to the windshield glass before the adhesive agent hardens.
HINT:
Install the moulding, aligning the center of moulding with the center of body.
(e) Using a scraper, remove any excessive adhesive agent before it hardens.
(f) Hold the glass and moulding in place securely with a protective tape or equivalent until the adhesive hardened.

NOTICE:
Take care not to drive the vehicle during the time described in the table below.

Temperature	Minimum time prior to drive of the vehicle
35 ˚C (95 ˚F)	1.5 hours
20 ˚C (68 ˚F)	5 hours
5 ˚C (41 ˚F)	24 hours

12. INSPECT FOR LEAKAGE AND REPAIR
NOTICE:
Conduct a leak test after the hardening time has elapsed.

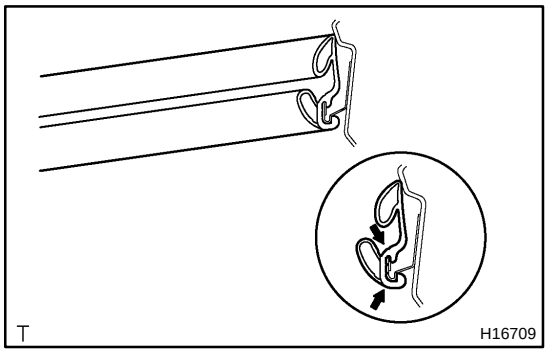

13. INSTALL ROOF SIDE RAIL WEATHERSTRIP
Attach the upper edge of the weatherstrip to body flange. Tap on the weatherstrip by hand.

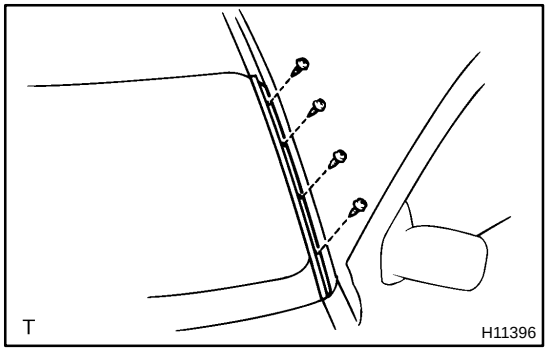

14. INSTALL WINDSHIELD OUTSIDE MOULDING
(a) Install the 4 screws and windshield outside moulding.
(b) Employ the same manner described above to the other side.

15. INSTALL FRONT PART OF ROOF SIDE RAIL WEATHERSTRIP LH AND RH
Install the front part of roof side rail weatherstrip LH and RH.

16. INSTALL COWL TOP VENTILATOR LOUVER
Install the cowl louver with the 8 screws and 6 clips.

17. INSTALL WIPER ARMS
(a) Operate the wipers once and turn the wiper switch OFF.
(b) Install the wiper arms and tighten the nuts by hand.

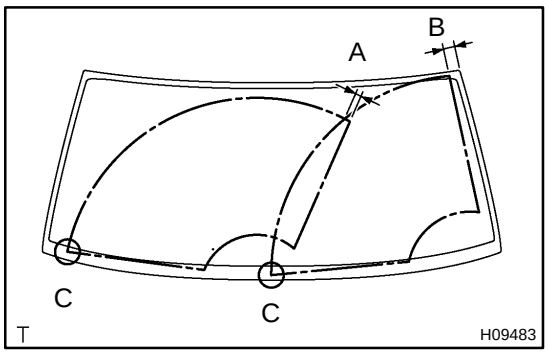

(c) Adjust the installation positions of the wiper arms to the positions shown in the illustration.
A: Approx. 25.7 mm (1.012 in.)
B: Approx. 39.7 mm (1.563 in.)

HINT:
When installing wiper arms, make sure that the tips of the blades are not beyond the ceramic edge as indicated by ”C” part in the illustration.

(d) Torque the nuts.
Torque: 20 N·m (204 kgf·cm, 15 ft·lbf)

(e) Install the caps.

18. INSTALL FRONT PART OF ROOF HEADLINING

19. INSTALL SUN VISOR HOLDERS

Install the 2 sun visor holders with the 2 screws.

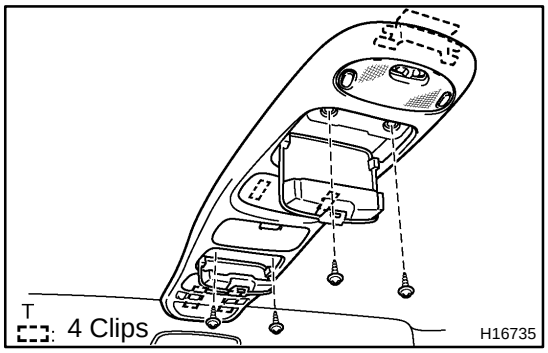

20. w/o Sliding roof:
INSTALL ROOF CONSOLE BOX

(a) Connect the connector.

(b) Install the console box with the 4 screws.

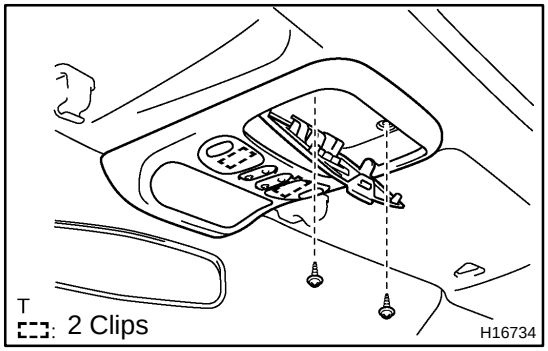

21. w/ Sliding roof:
INSTALL ROOF CONSOLE BOX

(a) Connect the connector.

(b) Install the console box with the 2 screws.

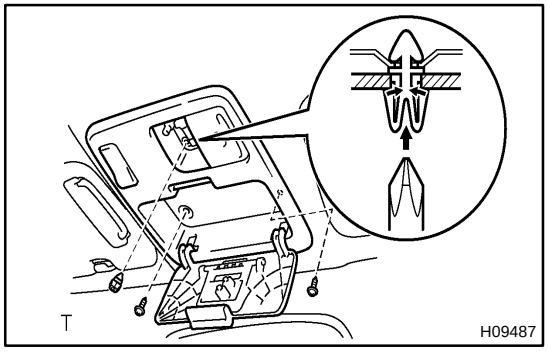

22. INSTALL FRONT PERSONAL LIGHT

(a) Connect the connector, then install the front personal light.

(b) Install the 2 screws and the clip.

HINT:
When installing the front personal light, attach the clip to the housing and push it to the bracket.

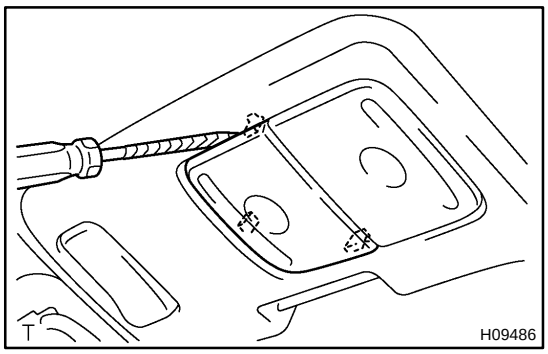

(c) Install the left side lens.

23. INSTALL SUB−VISORS

Install the 2 sub−visors with the 4 screws.

24. INSTALL SUN VISORS

(a) w/ Light:
Connect the connector.

(b) Install the 2 sun visors with the 4 screws.

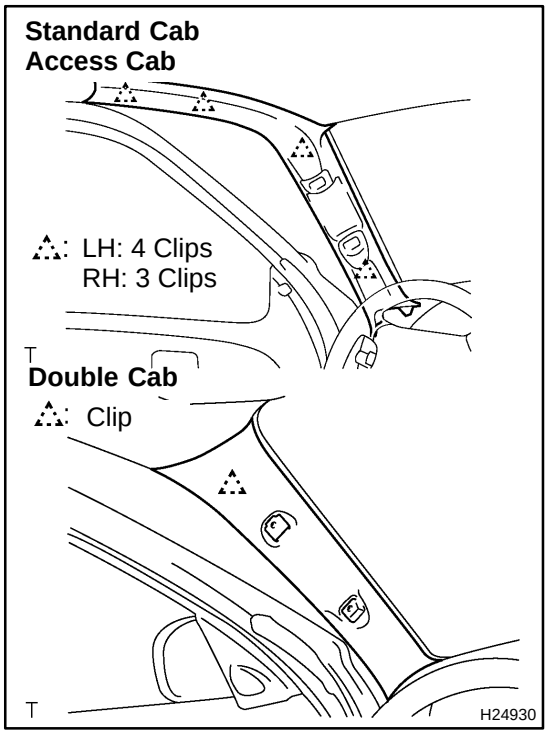

25. INSTALL FRONT PILLAR GARNISH

(a) Install the front pillar garnish.

(b) Perform the same procedure on the other side.

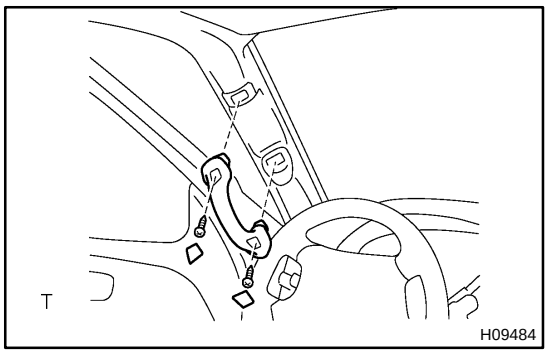

26. INSTALL ASSIST GRIPS

(a) Driver's side:
Using a torx® socket wrench, install the assist grip with the 2 torx® screws.
Torx® driver: T30 (Part No. 09041−00030 or locally manufactured tool)

(b) Standerd cab, Access cab, Passenger side:
Using a torx® driver, install the 2 assist grips with the 4 torx® screws.
Torx® driver: T30 (Part No.09041−00030 or locally manufactured tool)

(c) Double cab cab, Passenger side:
Using a torx® driver, install the assist grips with the 2 torx® screws.
Torx® driver: T30 (Part No.09041−00030 or locally manufactured tool)

(d) Install the caps.

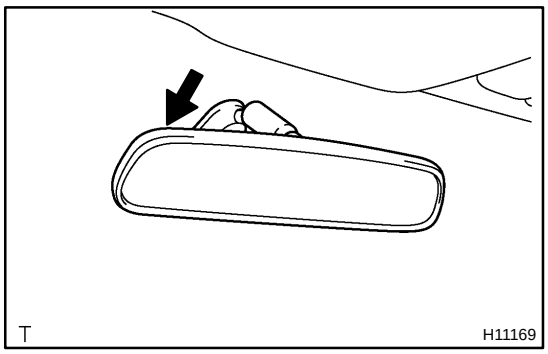

27. INSTALL INNER REAR VIEW MIRROR

Install the inner rear view mirror as shown in the illustration.

BO4Q3−02

REMOVAL

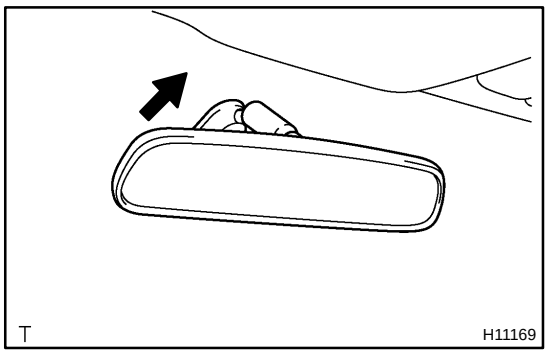

HINT:

While supporting the hood by hand, remove the hood support from the hood.

1. REMOVE INNER REAR VIEW MIRROR

Remove the inner rear view mirror as shown in the illustration.

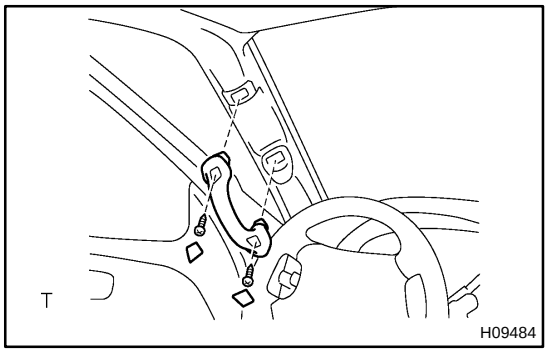

2. REMOVE ASSIST GRIPS

(a) Using a screwdriver, remove the caps.

HINT:

Tape the screwdriver tip before use.

(b) Driver side:
Using a torx® driver, remove the 2 torx® screws and assist grip.
Torx® driver: T30 (Part No.09041−00030 or locally manufactured tool)

(c) Standerd cab, Access cab, Passenger side:
Using a torx® driver, remove the 4 torx® screws and 2 assist grips.
Torx® driver: T30 (Part No.09041−00030 or locally manufactured tool)

(d) Double cab cab, Passenger side:
Using a torx® driver, remove the 2 torx® screws and assist grips.
Torx® driver: T30 (Part No.09041−00030 or locally manufactured tool)

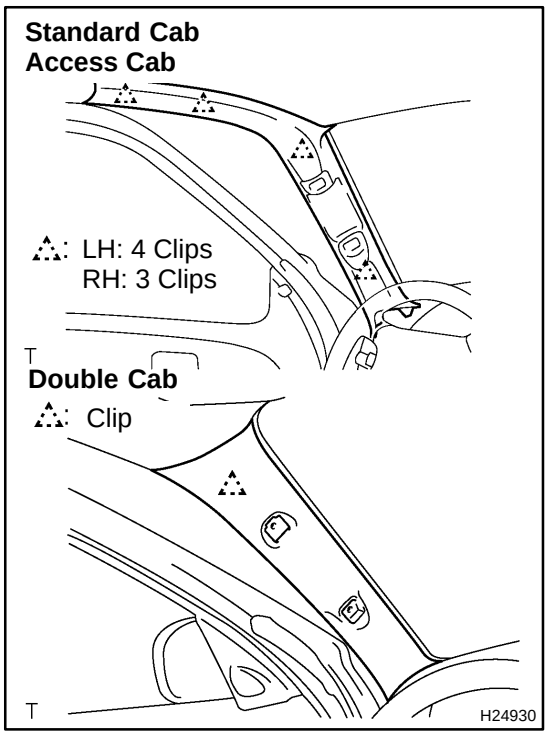

3. REMOVE FRONT PILLAR GARNISH

(a) Using a screwdriver, remove the front pillar garnish.

HINT:

Tape the screwdriver tip before use.

(b) Employ the same manner described above to the other side.

4. REMOVE SUN VISORS

(a) Remove the 4 screws and 2 sun visors.

(b) w/ Light:
Disconnect the connector.

5. REMOVE SUB−VISORS

Remove the 4 screws and 2 sub−visors.

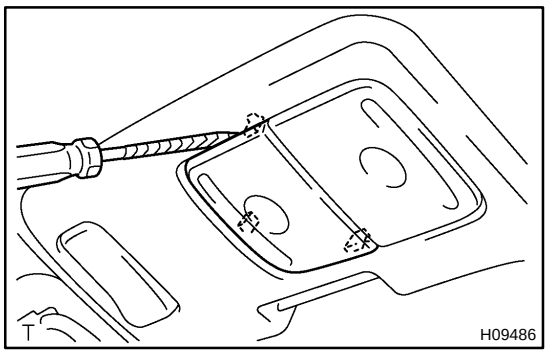

6. REMOVE FRONT PERSONAL LIGHT

(a) Using a screwdriver, remove the left side lens.

HINT:

Tape the screwdriver tip before use.

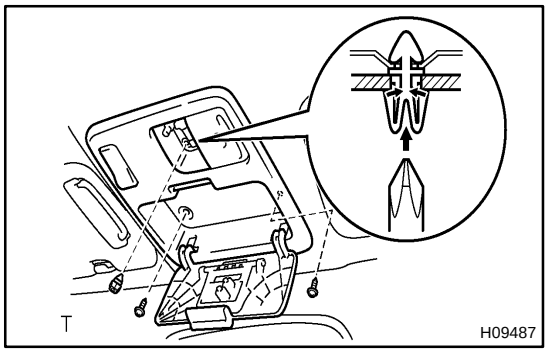

(b) Remove the 2 screws.

(c) Using a screwdriver, rotate the clip by 90° and remove it.

HINT:

Tape the screwdriver tip before use.

(d) Remove the front personal light, then disconnect the connector.

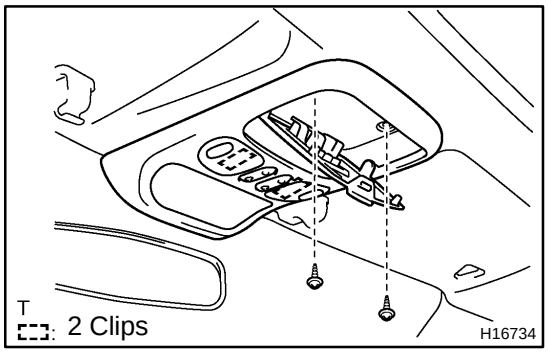

7. w/ Sliding roof:
REMOVE ROOF CONSOLE BOX

(a) Remove the 2 screws.

(b) Using a screwdriver, remove the roof console box.

HINT:

Tape the screwdriver tip before use.

(c) Disconnect the connectors.

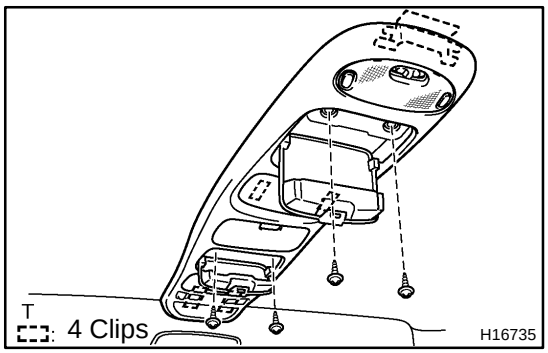

8. w/o Sliding roof:
REMOVE ROOF CONSOLE BOX

(a) Remove the 4 screws.

(b) Using a screwdriver, remove the roof console box.

HINT:

Tape the screwdriver tip before use.

(c) Disconnect the connectors.

9. REMOVE SUN VISOR HOLDERS

Remove the 2 screws and 2 sun visor holders.

10. REMOVE FRONT PART OF ROOF HEADLINING

11. REMOVE WIPER ARMS

(a) Using a screwdriver, remove the 2 caps.

HINT:

Tape the screwdriver tip before use.

(b) Remove the 2 nuts and wiper arms.

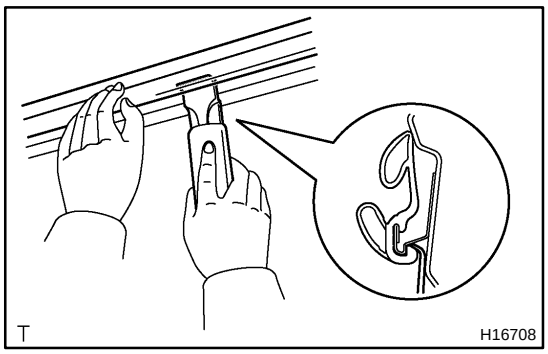

12. REMOVE COWL TOP VENTILATOR LOUVER

(a) Remove the hood to cowl top seal.

(b) Using a clip remover, remove the 6 clips.

(c) Remove the 8 screws and cowl top ventilator louver.

13. REMOVE FRONT PART OF ROOF SIDE RAIL WEATHERSTRIP LH AND RH

Using SST, pull off the roof side rail weatherstrip from front end.

SST 09806−30010

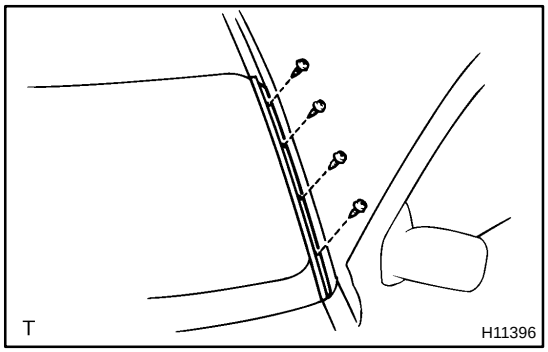

14. REMOVE WINDSHIELD OUTSIDE MOULDING

(a) Remove the 4 screws and windshield outside moulding.

(b) Perform the same procedure on the other side.

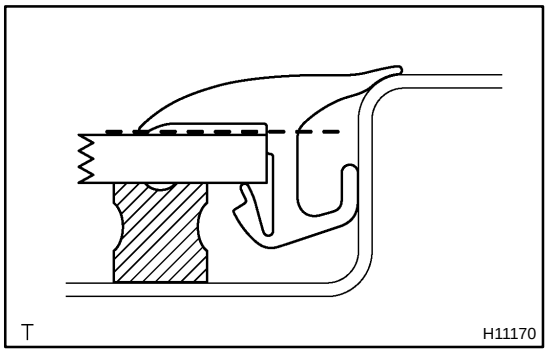

15. w/ Standed cab, Access cab:
REMOVE WINDSHIELD OUTSIDE UPPER MOULDING

(a) Using a knife, cut off the moulding as shown in the illustration.

NOTICE:

Do not damage the body with the knife.

(b) Remove the remaining moulding.

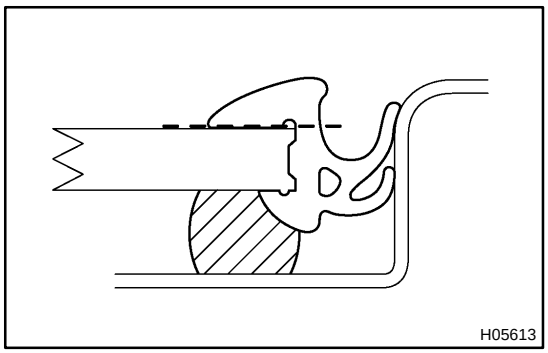

16. w/Double cab:
REMOVE WINDSHIELD OUTSIDE UPPER MOULDING

Using a knife, cut off the moulding as shown in the illustration.

NOTICE:

Do not damage the body with the knife.

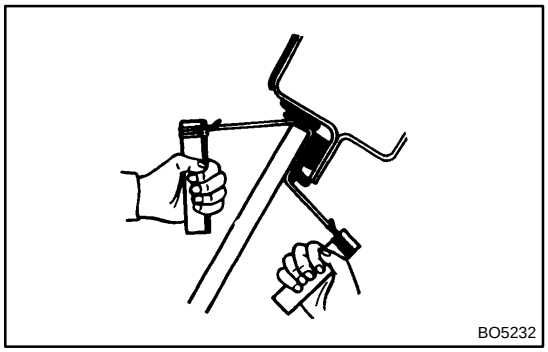

17. REMOVE WINDSHIELD GLASS

(a) Push piano wire through between the body and glass from the interior.

(b) Tie both wire ends to wooden blocks or similar objects.

HINT:

Apply protective tape to the outer surface to keep the surface from being scratched.

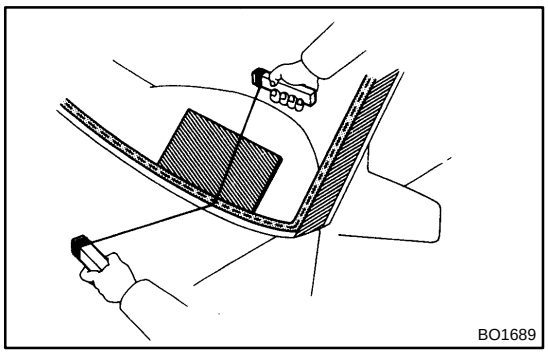

NOTICE:

When separating the glass, take care not to damage the paint and exterior ornaments. To prevent scratching the safety pad when removing the windshield, place a plastic sheet between the piano wire and safety pad.

(c) Cut the adhesive by pulling the piano wire around it.

(d) Remove the glass.

NOTICE:

Leave as much of the adhesive on the body as possible when cutting off the glass.

WHEEL OPENING MOULDING

BO2EV−03

COMPONENTS

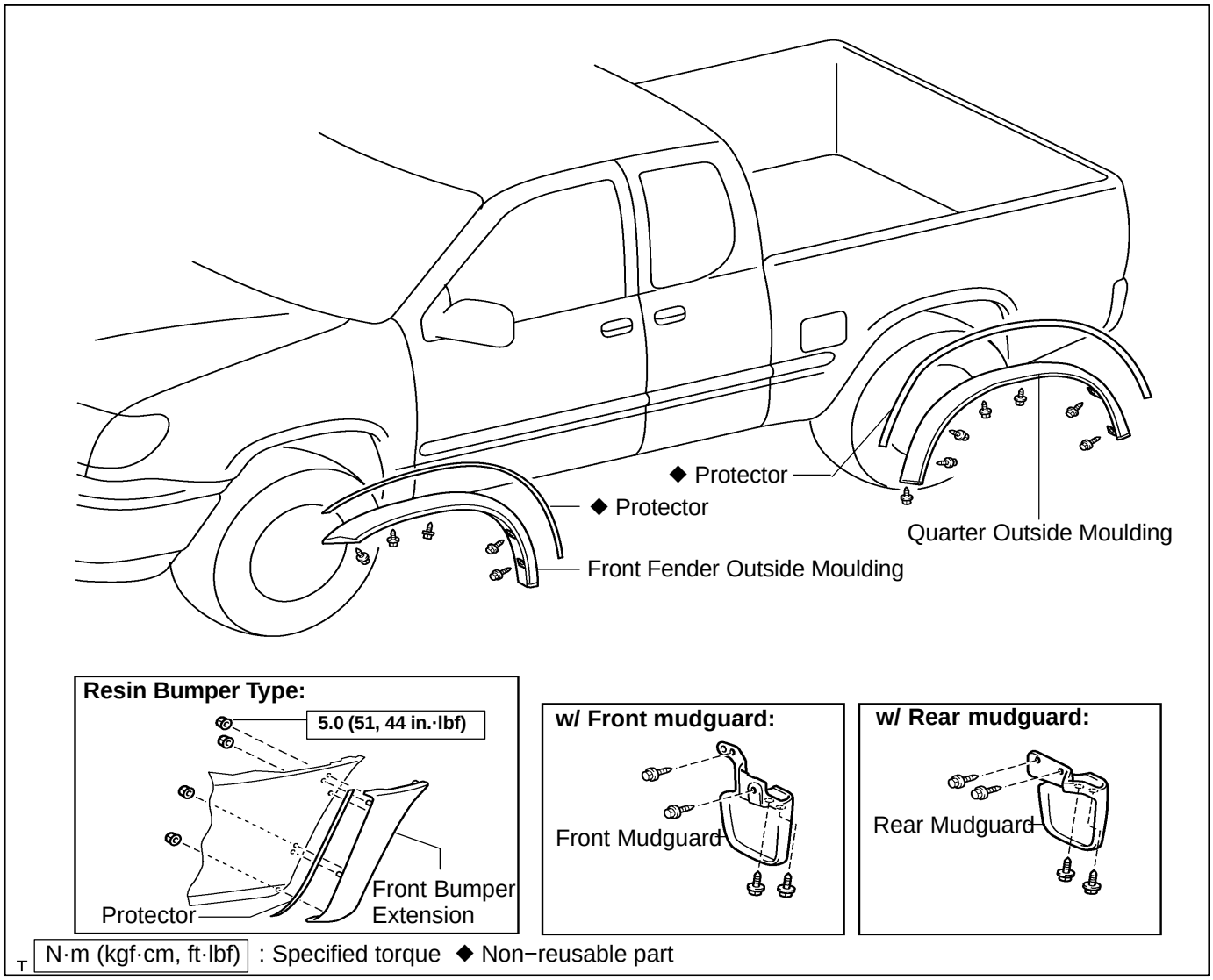

BO4H4−03

INSTALLATION

1. INSTALL QUARTER OUTSIDE MOULDING

(a) Clean the body mounting surface.

(1) Using a heat light, heat the body mounting surface to 40 to 60˚C (104 to 140˚F).

(2) Remove the protector from the body.

(3) Wipe off the stains with cleaner.

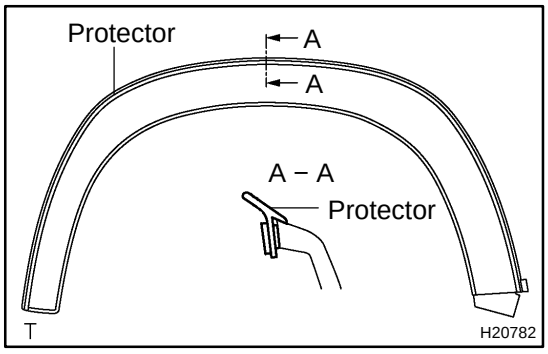

(4) Install a new protector as shown in the illustration.

(b) Install the quarter outside moulding.

(1) Using a heat light, heat the body and moulding.

Body: 40 to 60˚C (104 to 140˚F)

Moulding: 20 to 30˚C (68 to 86˚F)

NOTICE:

Do not heat the body and moulding excessively.

(2) Remove the moulding release sheet from the face of the moulding.

NOTICE:

When removing the moulding release sheet, be careful that dirt or dust will not adhere to the face of the moulding.

(3) Align the bosses with their corresponding holes on the body and press the moulding firmly.

NOTICE:

Do not apply excessive force onto the moulding, but steady pressure with your thumbs.

(4) Install the 6 screws.

2. w/ Rear mudguard:

INSTALL REAR MUDGUARD

Install the rear mudguard with the 4 screws.

3. INSTALL FRONT FENDER OUTSIDE MOULDING

(a) Clean the body mounting surface.

(1) Using a heat light, heat the body mounting surface to 40 to 60˚C (104 to 140˚F).

(2) Remove the protector from the body.

(3) Wipe off the stains with cleaner.

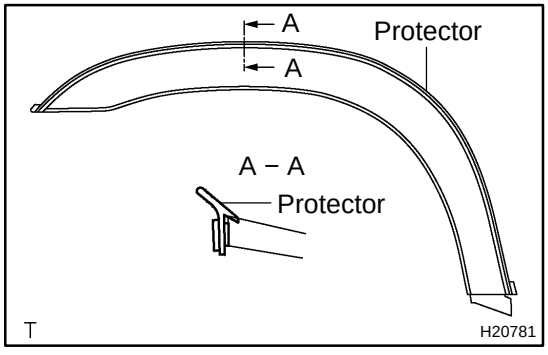

(4) Install a new protector as shown in the illustration.

(b) Install the front fender outside moulding.

(1) Using a heat light, heat the body and moulding.

Body: 40 to 60˚C (104 to 140˚F)

Moulding: 20 to 30˚C (68 to 86˚F)

NOTICE:

Do not heat the body and moulding excessively.

(2) Remove the moulding release sheet from the face of the moulding.

NOTICE:

When removing the moulding release sheet, be careful that dirt or dust will not adhere to the face of the moulding.

(3) Align the bosses with their corresponding holes on the body, and press the moulding firmly.

NOTICE:

Do not apply excessive force onto the moulding, but steady pressure with your thumbs.

(4) Install the 6 screws.

4. w/ Rear mudguard:

INSTALL FRONT MUDGUARD

Install the front mudguard with the 4 screws.

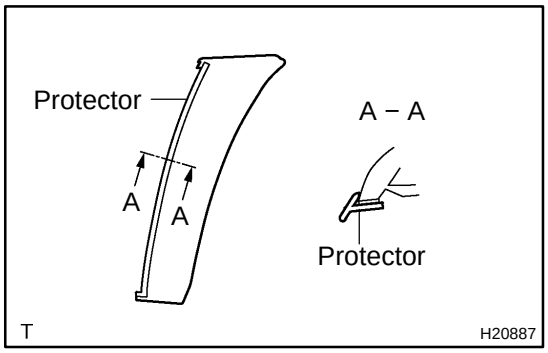

5. Resin bumper type:

INSTALL FRONT BUMPER EXTENSION

(a) Install the new protector as shown in the illustration.

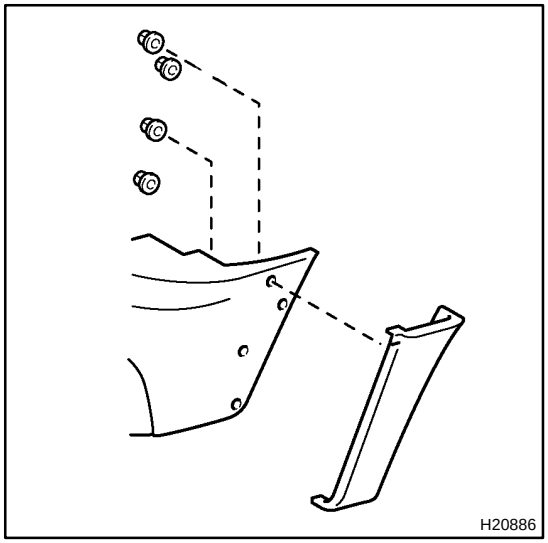

(b) Install the front bumper extension with the 4 nuts.

Torque: 5.0 N·m (51 kgf·cm, 44 in.·lbf)

BO4H3−03

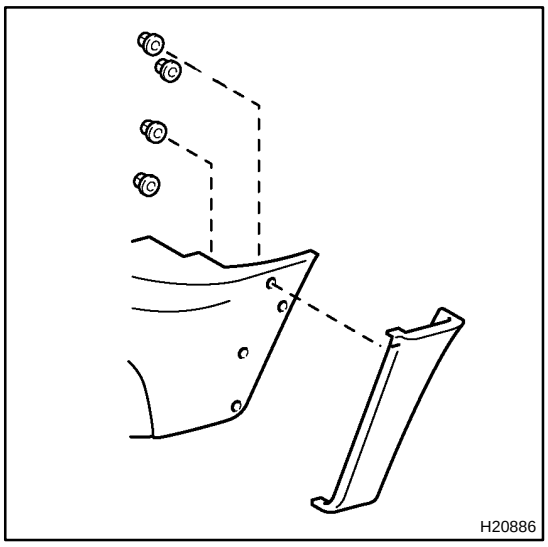

REMOVAL

1. Resin bumper type:
REMOVE FRONT BUMPER EXTENSION

Remove the 4 nuts and front bumper extension.

NOTICE:

If the protector are damaged, exchange them for new protector.

2. w/ Front mudguard:
REMOVE FRONT MUDGUARD

Remove the 4 screws and front mudguard.

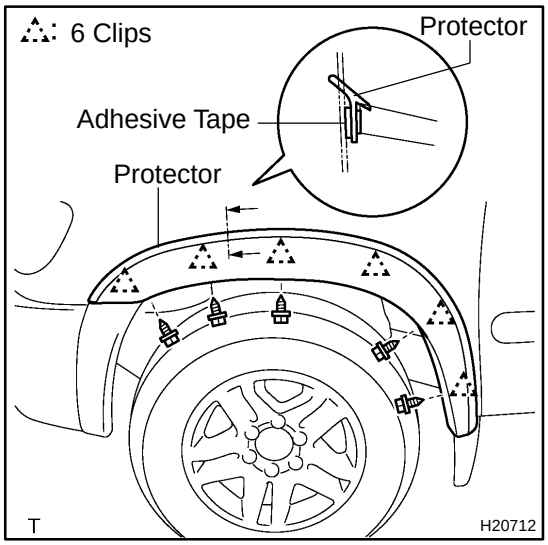

3. REMOVE FRONT FENDER OUTSIDE MOULDING

(a) Remove the 6 screws.

(b) Using a heat light, heat the moulding to 20 to 30˚C (68 to 86˚F).

NOTICE:

Do not heat the moulding excessively.

(c) Cut off the adhesive tape with a knife.

NOTICE:

Do not damage the body.

(d) Remove the moulding.

NOTICE:

If the clips are damaged, exchange them for new clips.

4. w/ Rear mudguard:
REMOVE REAR MUDGUARD

Remove the 4 screws and rear mudguard.

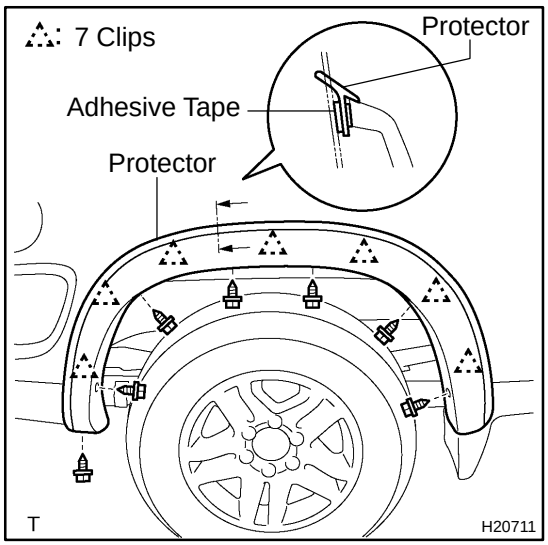

5. REMOVE QUARTER OUTSIDE MOULDING

(a) Remove the 6 screws.

(b) Using a heat light, heat the moulding to 20 to 30˚C (68 to 86˚F).

NOTICE:

Do not heat the moulding excessively.

(c) Cut off the adhesive tape with a knife.

NOTICE:

Do not damage the body.

(d) Remove the moulding.

NOTICE:

If the clips are damaged, exchange them for new clips.

BR1Y7−01

COMPONENTS

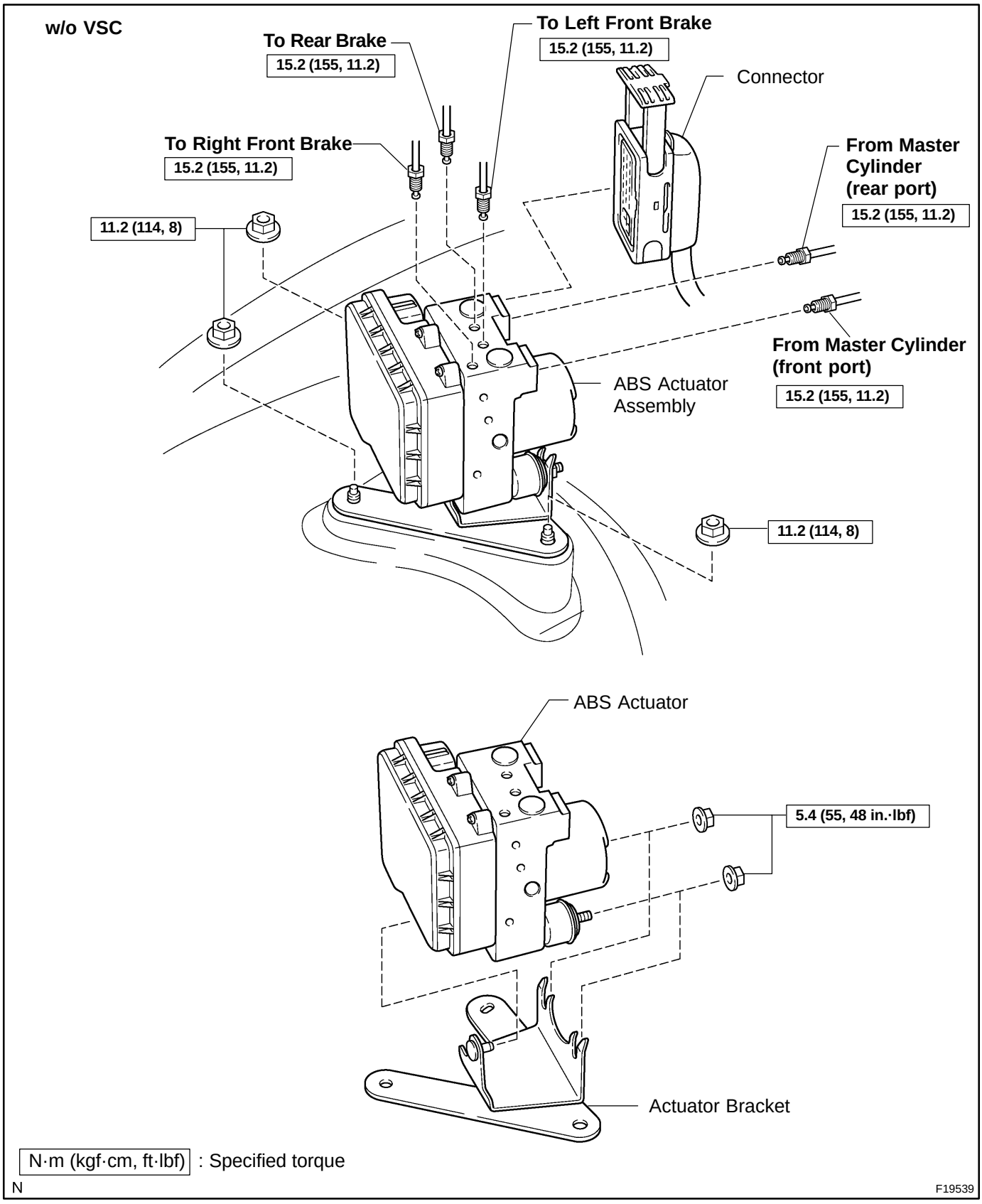

BR10Y−02

INSTALLATION

Installation is in the reverse order of removal (See page BR−65).

HINT:

- After installation, fill the brake reservoir with brake fluid and bleed the brake system (See page BR−4).
- Check for leaks.

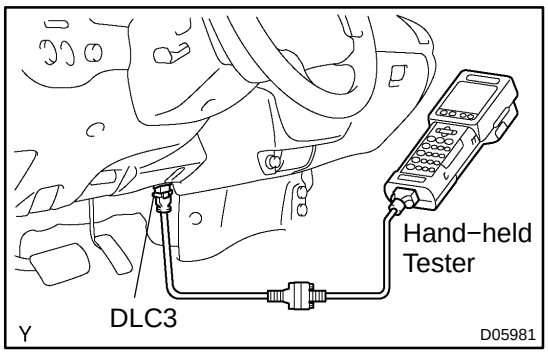

ABS ACTUATOR

BR10Z−02

ON−VEHICLE INSPECTION

1. CONNECT HAND−HELD TESTER

(a) Connect the hand−held tester to the DLC3.

(b) Start the engine and run it at idle.

(c) Select ACTIVE TEST mode on the hand−held tester.

HINT:

Please refer to the hand−held tester operator's manual for further details.

2. INSPECT ABS ACTUATOR MOTOR OPERATION

(a) Select the "ABS MOT RELAY" on the hand−held tester display, then operate the ABS actuator motor.

(b) Check that the operation sound of the ABS motor can be heard when the ABS actuator relay is turned ON by the hand−held tester.

NOTICE:

Do not keep the motor relay ON for more than 5 seconds continuously. When operating it continuously, set the interval of more than 20 seconds.

If the operation sound cannot be heard, replace the ABS actuator because motor operation is in failure.

(c) Turn the motor relay OFF.

3. INSPECT RIGHT FRONT WHEEL SOLENOID

(a) Depress the brake pedal and hold it for about 15 seconds, and then check that the brake pedal does not go down further.

If the brake pedal goes down, replace the ABS actuator because the sealing condition of the reduction solenoid valve is abnormal.

(b) Select the "ABS MOT RELAY" on the hand−held tester display, then operate the ABS actuator motor.

(c) Check that the brake pedal does not pulsate when the motor relay is turned ON by the hand−held tester.

NOTICE:

Do not keep the motor relay ON for more than 5 seconds continuously. When operating it continuously, set the interval of more than 20 seconds.

If there is pulsation in the brake pedal, replace the ABS actuator because the sealing condition of the reduction solenoid valve is abnormal.

(d) Turn the ABS actuator motor OFF.

(e) Depress the brake pedal and hold it until step (j) is completed.

(f) Select the "SFRH" on the hand−held tester display, then operate the solenoid.

(g) Check that the brake pedal does not go down further when the SFRH solenoid is turned ON by the hand−held tester.

NOTICE:

Do not keep the solenoid ON for more than 2 seconds continuously. When operating it continuously, set the interval of more than 20 seconds.

If the brake pedal goes down, replace the ABS actuator because holding solenoid valve operation is abnormal.

HINT:

To protect the solenoid, the hand−held tester turns OFF automatically 2 seconds after the solenoid has been turned ON.

(h) Select the ”SFRR” on the hand−held tester display, then operate the solenoid.

(i) Check that the brake pedal goes down further when the SFRR solenoid is turned ON by the hand−held tester.

If the brake pedal does not go down, replace the ABS actuator because reduction solenoid valve operation is abnormal.

(j) Check that the brake pedal returns when the motor relay is turned ON by the hand−held tester.

NOTICE:

Do not keep the motor relay ON for more than 5 seconds continuously. When operating it continuously, set the interval of more than 20 seconds.

If the brake pedal does not return, replace the ABS actuator because motor operation is in failure.

(k) Turn the motor relay OFF and release the brake pedal.

4. INSPECT OTHER WHEEL SOLENOIDS OPERATION

Check the solenoids of the other wheels by following the same inspection procedures as for the right front wheel solenoids.

HINT:

Left front wheel: ”SFLH” and ”SFLR”

Right rear wheel: ”SRRH” and ”SRRR”

Right front wheel: ”SFRR” and SFRH”

NOTICE:

Never depress the brake pedal when the reduction solenoid alone is turned ON and the ABS ECU is reset.

5. CLEAR DTC (See page DI−1397)

BR10V−02

REMOVAL

1. REMOVE BRAKE LINE COVER

2. DISCONNECT CONNECTOR

Pull out the release bar, and disconnect the ABS ECU connector.

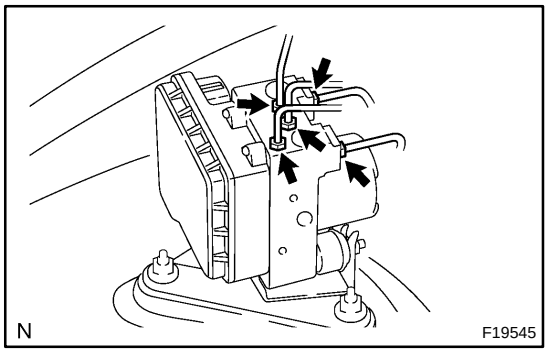

3. DISCONNECT BRAKE LINES

Using SST, disconnect the 5 brake lines from the ABS actuator.

SST 09023−00101

Torque: 15.2 N·m (155 kgf·cm, 11.2 ft·lbf)

HINT:

- When disconnecting the brake line, use tags or make a memo to identify the place to reconnect (see page BR−64).
- At the time of installation, connect each brake line to the correct position (see page BR−64).

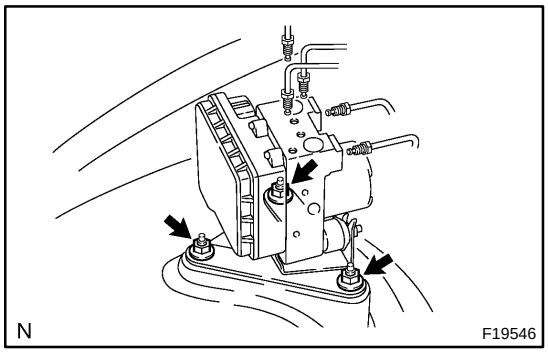

4. REMOVE ABS ACTUATOR ASSEMBLY

Remove the 3 nuts and ABS actuator assembly.

Torque: 11.2 N·m (114 kgf·cm, 8 ft·lbf)

5. REMOVE ABS ACTUATOR

(a) Remove the 2 nuts and ABS actuator from the actuator bracket.

Torque: 5.4 N·m (55 kgf·cm, 48 in.·lbf)

BR1XF−02

COMPONENTS

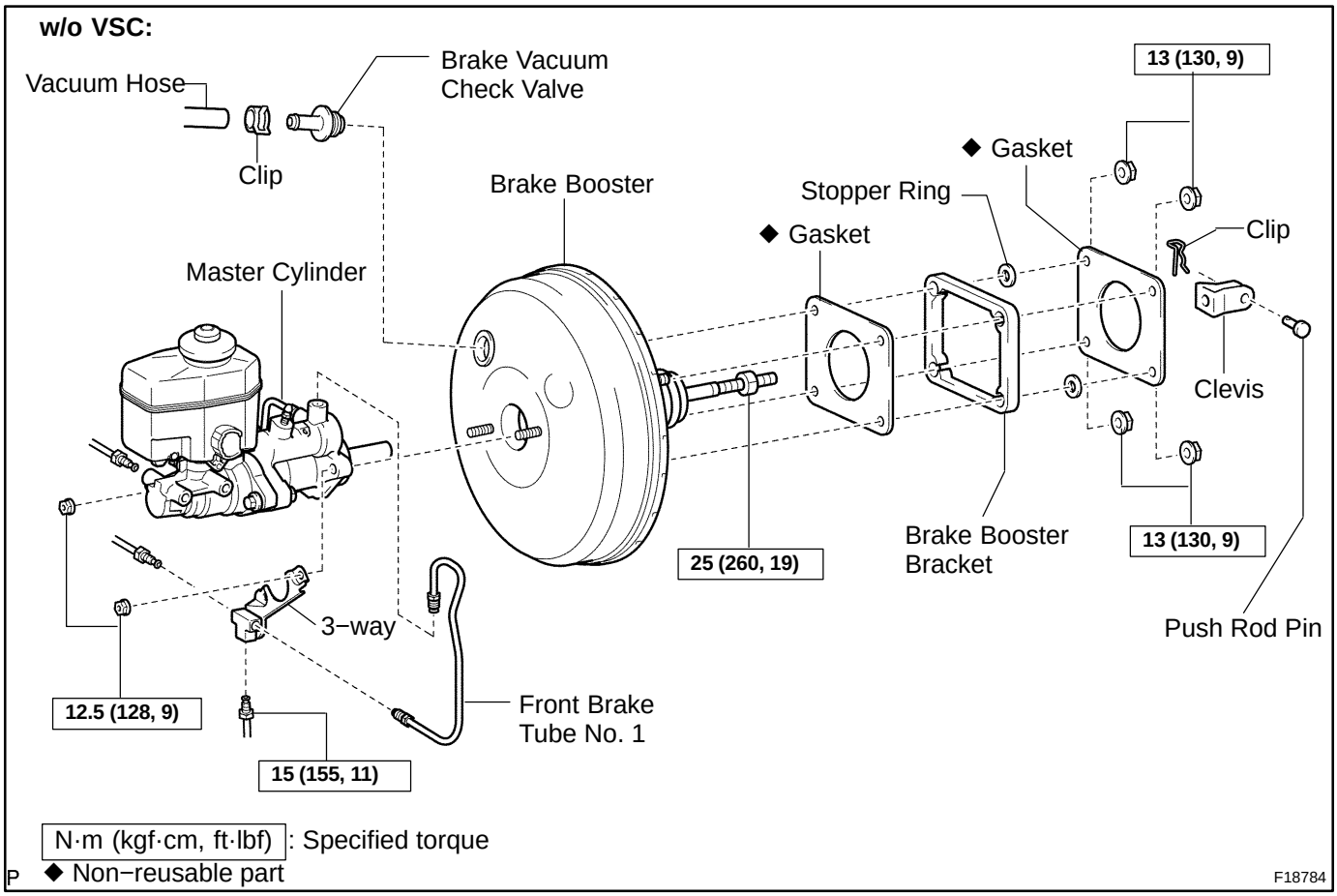

BR1XH−02

INSTALLATION

1. INSTALL BRAKE BOOSTER

(a) Install a new gasket to the brake booster.

(b) Install the brake booster bracket and 2 stopper rings to the brake booster.

(c) Install the booster and a new gasket.

(d) Install the clevis to the operating rod.

(e) Install and torque the booster installation nuts.

Torque: 13 N·m (130 kgf·cm, 9 ft·lbf)

(f) Install the clevis pin into the clevis and brake pedal, and install the clip to the clevis pin.

(g) Connect the vacuum hose to the brake booster.

2. INSTALL NO. 2 HEATER TO REGISTER DUCT, LOWER FINISH PANEL, COWL SIDE TRIM LH AND SCUFF PLATE (See page BO−120)

NOTICE:

- **Do not adjust the brake booster push rod.**
- **Do not change the combination of the diameter converting unit and brake.**

3. INSTALL MASTER CYLINDER (See page BR−30)

4. FILL BRAKE RESERVOIR WITH BRAKE FLUID AND BLEED BRAKE SYSTEM (See page BR−4)

5. CHECK FOR FLUID LEAKAGE

6. CHECK AND ADJUST BRAKE PEDAL (See page BR−10)

7. DO OPERATIONAL CHECK (See page BR−35)

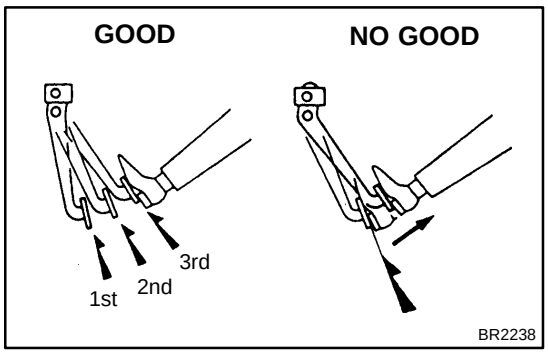

BRAKE BOOSTER ASSEMBLY (Double Cab)

BR1XE−02

ON−VEHICLE INSPECTION

1. INSPECT BRAKE BOOSTER

(a) Air tightness check.

(1) Start the engine and stop it after 1 or 2 minutes. Depress the brake pedal several times slowly.

HINT:

If the pedal goes down farthest the 1st time, and gradually rises at the 2nd or 3rd time, the booster is airtight.

(2) Depress the brake pedal while the engine is running, and stop the engine with the pedal depressed.

HINT:

- If there is no change in the pedal reserve distance after holding the pedal for 30 seconds, the booster is airtight.
- If not, replace the brake booster.

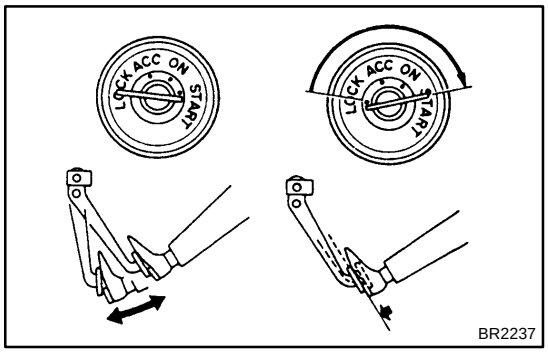

(b) Operating check.

(1) Depress the brake pedal several times with the ignition switch OFF and check that there is no change in the pedal reserve distance.

(2) Depress the brake pedal and start the engine.

HINT:

- If the pedal goes down slightly, the operation is normal.
- If not, replace the brake booster.

(c) Start the engine and stop it after 1 or 2 minutes. Depress the brake pedal several times slowly.

If the pedal goes down farthest the 1st time, but gradually rises after the 2nd or 3rd time, the booster is air tight.

2. INSPECT VACUUM CHECK VALVE

(a) Check the vacuum check valve.

(1) Slide the clip and disconnect the vacuum hose.

(2) Remove the vacuum check valve.

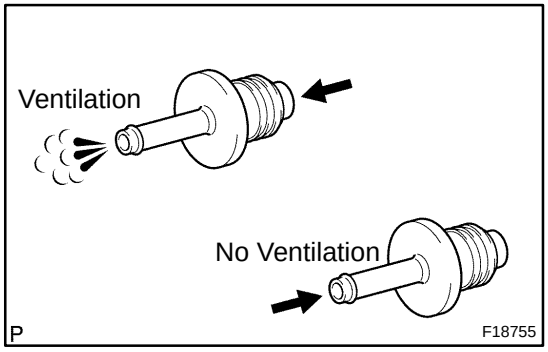

(3) Check that there is ventilation from the booster to the engine, and no ventilation from the engine to the booster.

(4) If any fault is found, replace the vacuum check valve.

BR1XG−02

REMOVAL

NOTICE:

- **Do not adjust the brake booster push rod.**
- **Do not change the combination of the diameter converting unit and brake.**

1. REMOVE MASTER CYLINDER (See page BR−26)

2. DISCONNECT VACUUM HOSE FROM BRAKE BOOSTER

3. REMOVE SCUFF PLATE LH, COWL SIDE TRIM LH, LOWER FINISH PANEL AND NO. 2 HEATER TO REGISTER DUCT (See page BO−111)

4. REMOVE PEDAL RETURN SPRING

5. REMOVE CLIP AND CLEVIS PIN

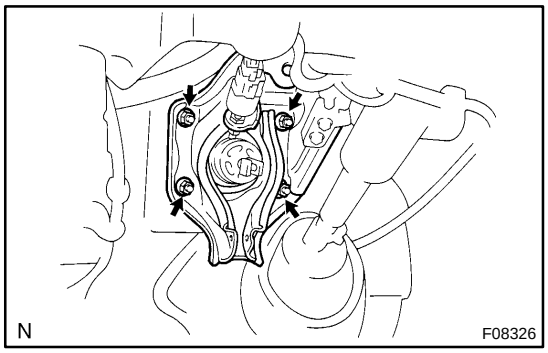

6. REMOVE BRAKE BOOSTER

(a) Remove the 4 nuts and clevis.

(b) Pull out the brake booster and gasket.

(c) Remove the 2 stopper rings, brake booster bracket and gasket from the brake booster.

BR1Y4−01

COMPONENTS

w/o VSC:

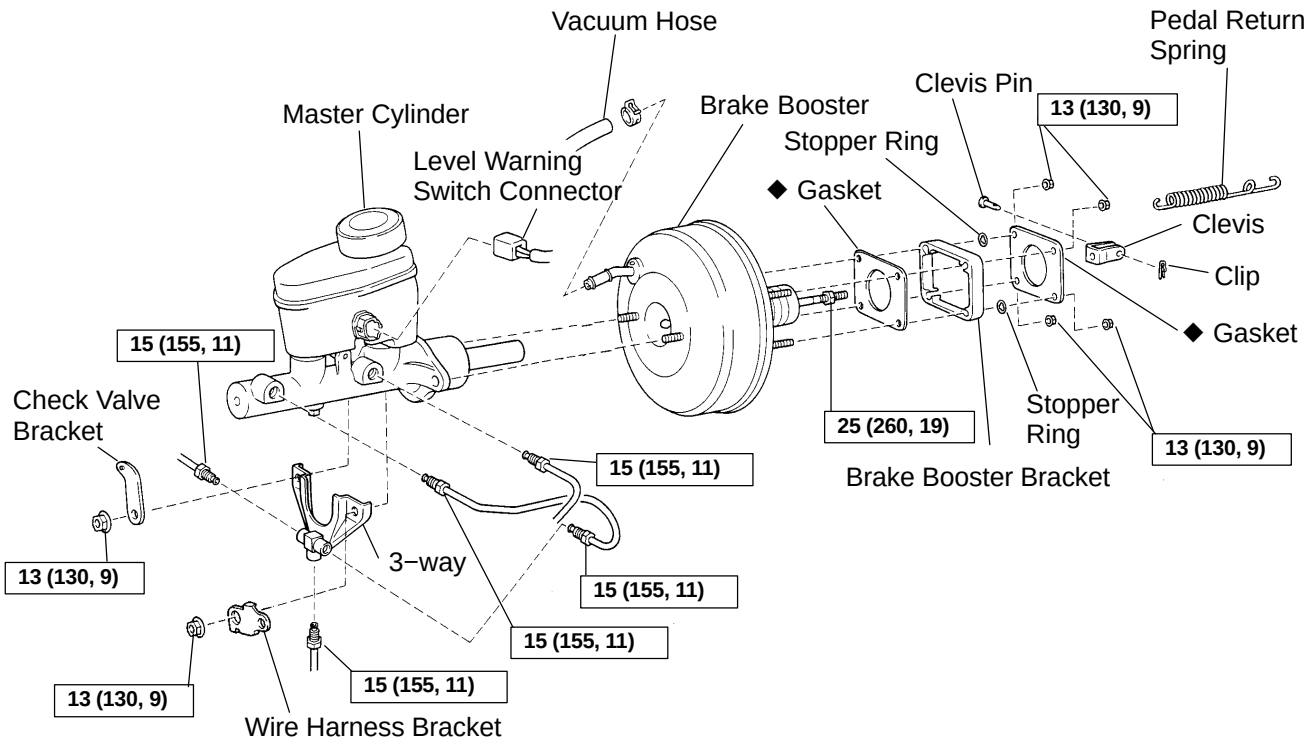

N·m (kgf·cm, ft·lbf): Specified torque

◆ Non−reusable part

N

F18908

BR1Y6−01

INSTALLATION

1. INSTALL BRAKE BOOSTER

(a) Install a new gasket to the brake booster.

(b) Install the brake booster bracket and 2 stopper rings to the brake booster.

(c) Install the booster and a new gasket.

(d) Install the clevis to the operating rod.

(e) Install and torque the booster installation nuts.
Torque: 13 N·m (130 kgf·cm, 9 ft·lbf)

(f) Install the clevis pin into the clevis and brake pedal, and install the clip to the clevis pin.

(g) Connect the vacuum hose to the brake booster.

2. INSTALL NO. 2 HEATER TO REGISTER DUCT, LOWER FINISH PANEL, COWL SIDE TRIM LH AND SCUFF PLATE (See page BO−120)

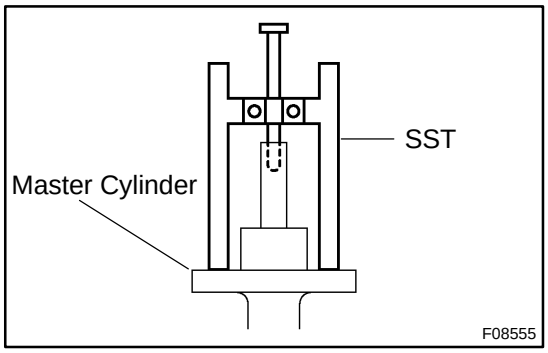

3. ADJUST LENGTH OF BOOSTER PUSH ROD

(a) Set the SST on the master cylinder, and lower the pin until its tip slightly touches the piston.
SST 09737−00011

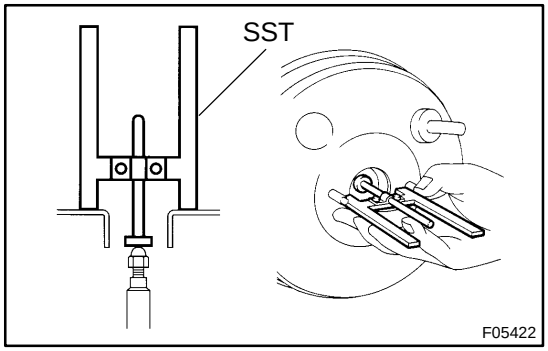

(b) Turn the SST upside down, and set it on the booster.
SST 09737−00011

(c) Measure the clearance between the booster push rod and pin head (SST).
Clearance: 0 mm (0 in.)

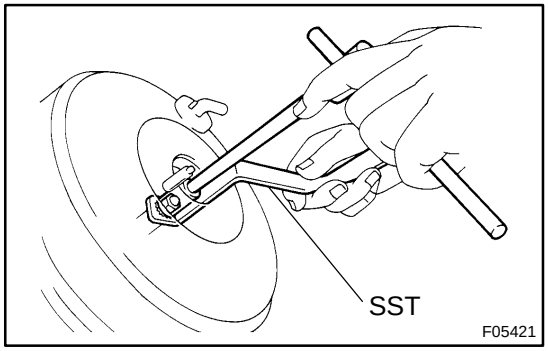

(d) Using SST, adjust the booster push rod length until the push rod lightly touches the pin head.
SST 09737−00020

4. INSTALL MASTER CYLINDER (See page BR−24)

5. FILL BRAKE RESERVOIR WITH BRAKE FLUID AND BLEED BRAKE SYSTEM (See page BR−4)

6. CHECK FOR FLUID LEAKAGE

7. CHECK AND ADJUST BRAKE PEDAL (See page BR−10)

8. DO OPERATIONAL CHECK (See page BR−31)

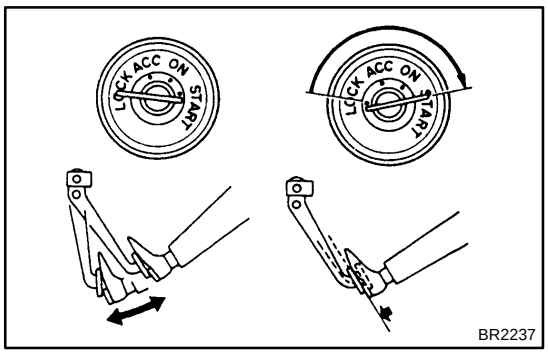

BRAKE BOOSTER ASSEMBLY (Standard Cab, Access Cab)

BR1Y3−01

ON−VEHICLE INSPECTION

1. OPERATING CHECK

(a) Depress the brake pedal several times with the engine off and check that there is no change in the pedal reserve distance.

(b) Depress the brake pedal and start the engine. If the pedal goes down slightly, operation is normal.

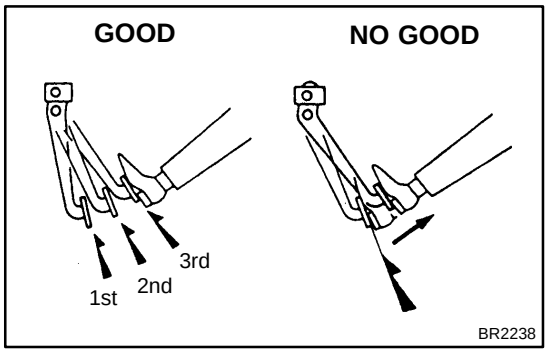

2. AIR TIGHTNESS CHECK

(a) Start the engine and stop it after 1 or 2 minutes. Depress the brake pedal several times slowly.

If the pedal goes down farthest the 1st time, but gradually rises after the 2nd or 3rd time, the booster is air tight.

(b) Depress the brake pedal while the engine is running, and stop the engine with the pedal depressed. If there is no change in the pedal reserve travel after holding down the pedal for 30 seconds, the booster is air tight.

REMOVAL

1. **REMOVE MASTER CYLINDER (See page BR–20)**
2. **DISCONNECT VACUUM HOSE FROM BRAKE BOOSTER**
3. **REMOVE SCUFF PLATE LH, COWL SIDE TRIM LH, LOWER FINISH PANEL AND NO. 2 HEATER TO REGISTER DUCT (See page BO–111)**
4. **REMOVE PEDAL RETURN SPRING**
5. **REMOVE CLIP AND CLEVIS PIN**

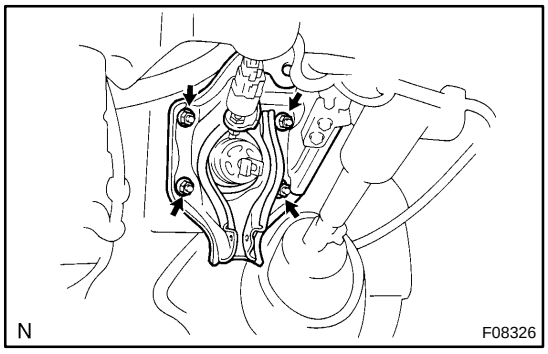

6. **REMOVE BRAKE BOOSTER**

(a) Remove the 4 nuts and clevis.

(b) Pull out the brake booster and gasket.

(c) Remove the 2 stopper rings, brake booster bracket and gasket from the brake booster.

BRAKE MASTER CYLINDER (Double Cab)

BR1X8−02

COMPONENTS

w/o VSC:

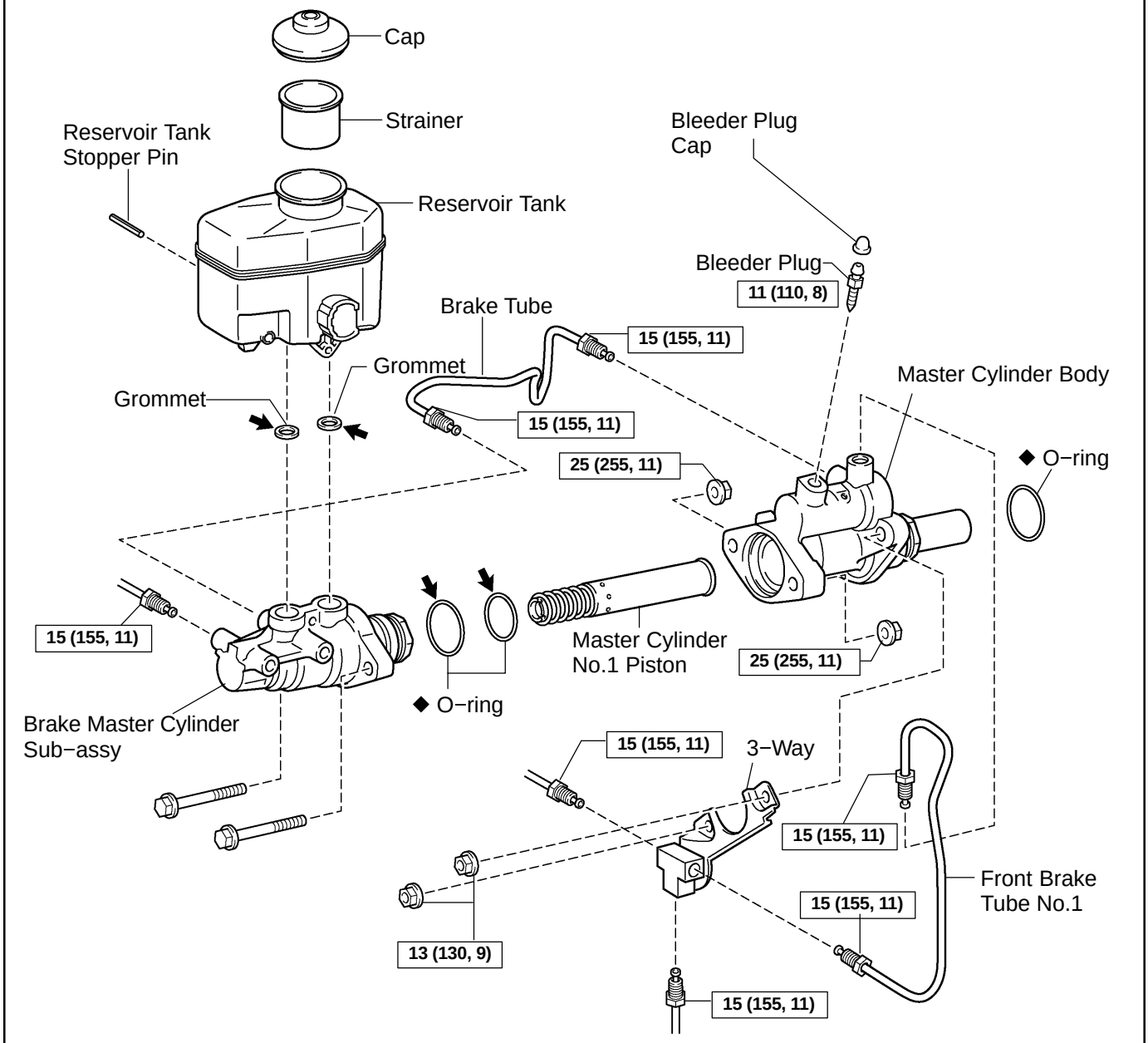

N·m (kgf·cm, ft·lbf) : Specified torque

◆ Non−reusable part

N ➡ Lithium soap base glycol grease

F19544

BR1Y2−01

DISASSEMBLY

1. REMOVE RESERVOIR TANK

(a) Remove the brake master cylinder reservoir tank stopper pin and pull out the reservoir.

(b) Remove the cap and strainer from the reservoir.

2. REMOVE 2 GROMMETS

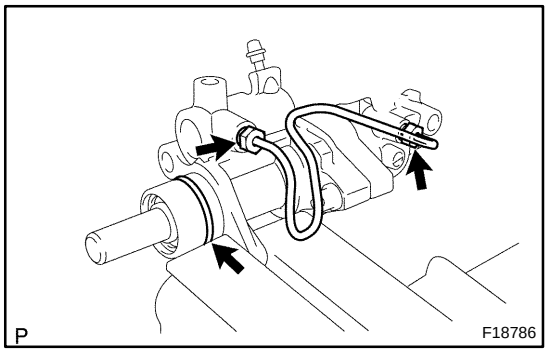

3. REMOVE BRAKE MASTER CYLINDER SUB−ASSY

(a) Hold the brake master cylinder in a vise with aluminum plates in between.

(b) Using a screwdriver, remove the O−ring.

(c) Using SST, remove the brake tube from the brake master cylinder.

SST 09023−00101

Torque: 15 N·m (155 kgf·cm, 11 ft·lbf)

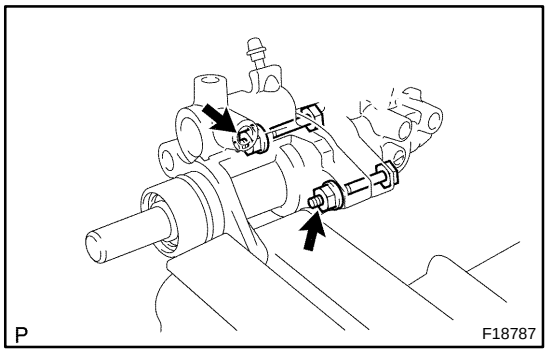

(d) Remove the 2 nuts, 2 bolts and brake master cylinder sub−assy.

Torque: 25 N·m (255 kgf·cm, 18 ft·lbf)

NOTICE:

Pay due attention so as not to drop the No. 1 piston from the plunger master cylinder. (If the No. 1 piston is dropped, it cannot be reused.)

(e) Remove the master cylinder body and master cylinder No. 1 piston from the brake master cylinder sub−assy.

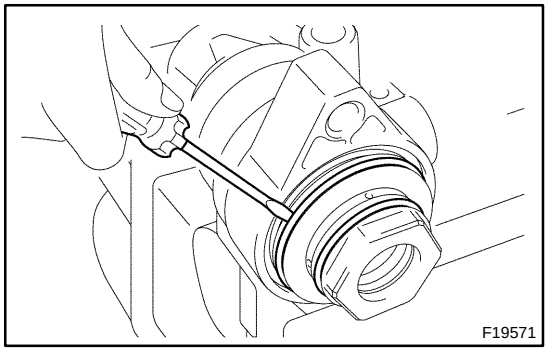

(f) Using a screwdriver, remove the 2 O−rings.

(g) Remove the bleeder plug from the brake master cylinder sub−assy.

Torque: 11 N·m (110 kgf·cm, 8 ft·lbf)

(h) Remove the bleeder plug cap.

BR1XA−01

INSPECTION

HINT:

Clean the disassembled parts with compressed air.

1. INSPECT CYLINDER BORE FOR RUST OR SCORING

If necessary, clean or replace the cylinder.

2. INSPECT CYLINDER FOR WEAR OR DAMAGE

If necessary, clean or replace the cylinder.

BR1XC−02

INSTALLATION

Installation is in the reverse order of removal (See page BR−26).

HINT:

- After installation, fill the brake reservoir with brake fluid and bleed the brake system (see page BR−4).
- Check for leaks, check and adjust the brake pedal (see page BR−10).
- Check brake pedal height (see page BR−10).
- Check the brake actuator with the hand−held tester (see page BR−67).

BR1XB−02

REASSEMBLY

Reassembly is in the reverse order of disassembly (See page BR−27).

NOTICE:

Apply lithium soap base glycol grease to the rubber parts indicated by the arrows (See page BR−25).

BR1XD−02

REMOVAL

1. DISCONNECT LEVEL WARNING SWITCH CONNECTOR

NOTICE:

- **Do not adjust the brake booster push rod.**
- **Do not change the combination of the diameter converting unit and brake.**

2. TAKE OUT FLUID WITH SYRINGE

NOTICE:

Do not let brake fluid remain on a painted surface. Wash it off immediately.

3. DISCONNECT BRAKE LINES

(a) Using SST, disconnect the 5 brake lines from the master cylinder and 3−way.

SST 09023−00101

Torque: 15 N·m (155 kgf·cm, 11 ft·lbf)

(b) Remove the front brake tube No. 1 from the master cylinder and 3−way.

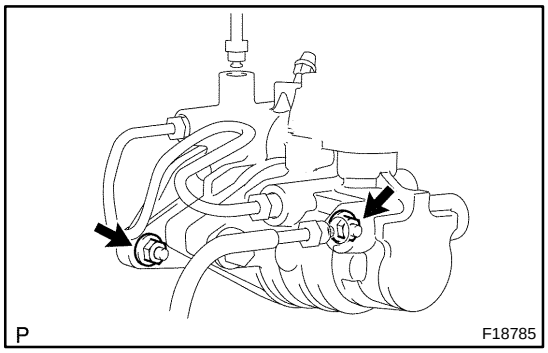

4. REMOVE BRAKE MASTER CYLINDER

Remove the 2 nuts, 3−way and brake master cylinder.

Torque: 13 N·m (130 kgf·cm, 9 ft·lbf)

BRAKE MASTER CYLINDER (Standard Cab, Access Cab)

BR1XW–01

COMPONENTS

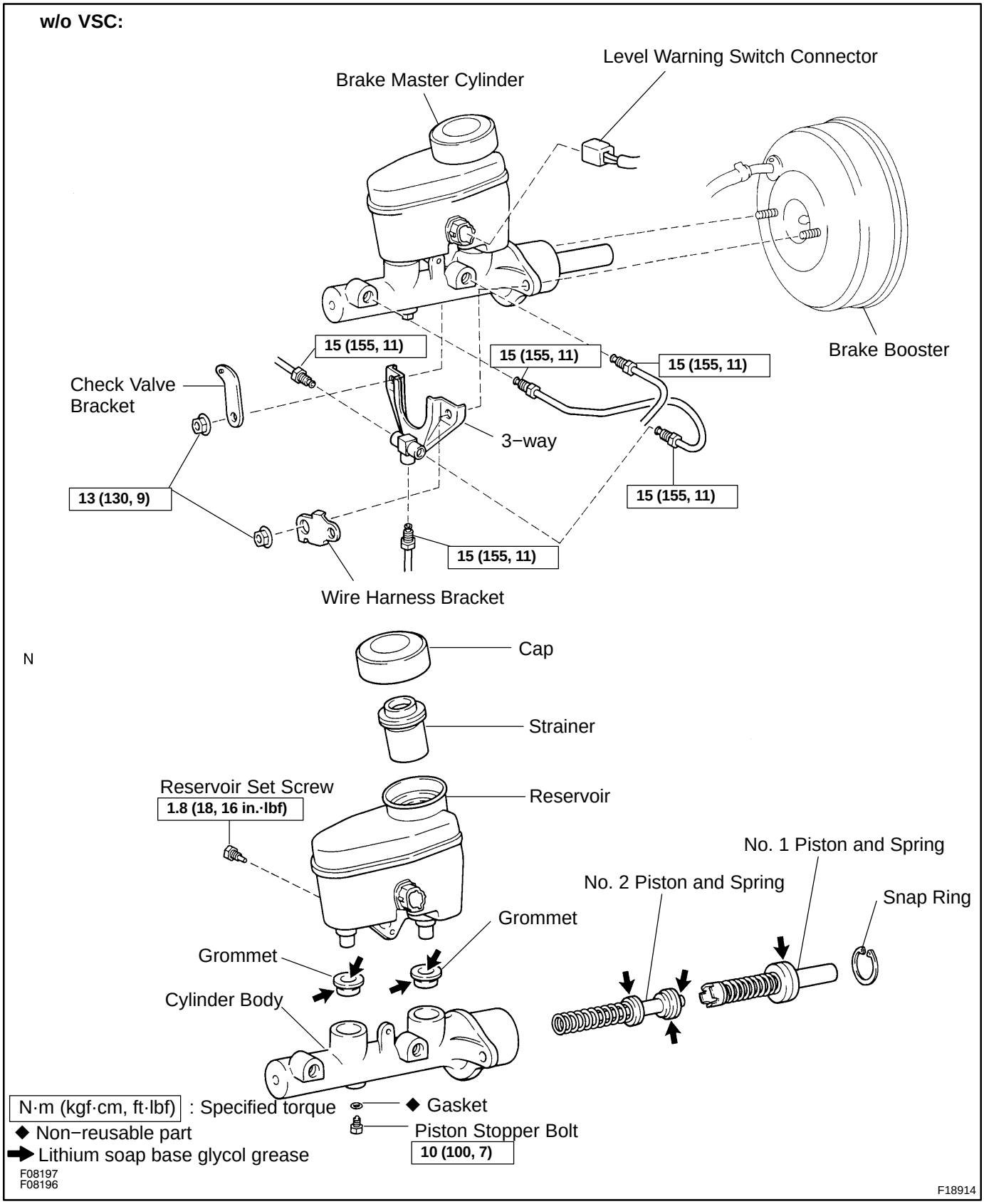

BR1XY–01

DISASSEMBLY

1. REMOVE RESERVOIR

(a) Remove the set screw and pull out the reservoir.
Torque: 1.8 N·m (18 kgf·cm, 16 in.·lbf)

(b) Remove the cap and strainer from the reservoir.

2. REMOVE 2 GROMMETS

3. PLACE CYLINDER IN VISE

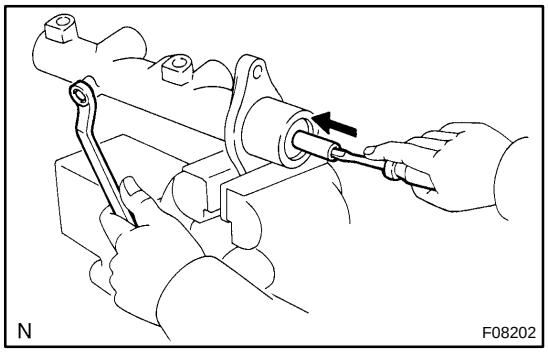

4. REMOVE PISTON STOPPER BOLT

Using a screwdriver, push the pistons in all the way and remove the piston stopper bolt and gasket.

HINT:

Tape the screwdriver tip before use.

Torque: 10 N·m (100 kgf·cm, 7 ft·lbf)

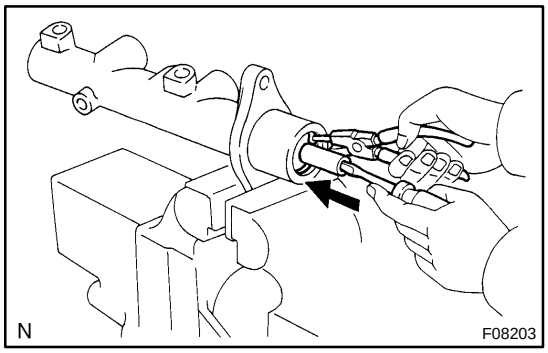

5. REMOVE 2 PISTONS AND SPRINGS

(a) Push in the piston with a screwdriver and remove the snap ring with snap ring pliers.

HINT:

Tape the screwdriver tip before use.

(b) Remove the No. 1 piston and spring by hand, pulling them straight out, not at an angle.

NOTICE:

- **If pulled out and installed at an angle, there is a possibility that the cylinder bore could be damaged.**
- **At the time of reassembly, be careful not to damage the rubber lips on the pistons.**

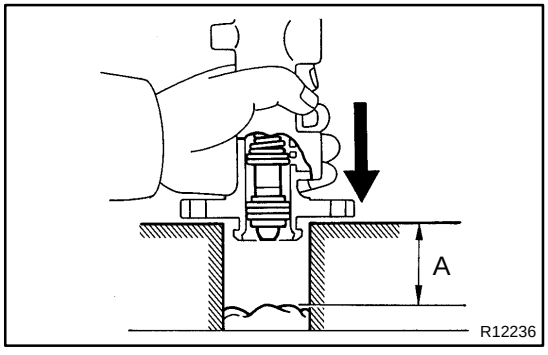

(c) Place a rag and 2 wooden blocks on the work table, and lightly tap the cylinder flange against the block edges until the No. 2 piston and spring drop out of the cylinder.

HINT:

Make sure the distance (A) from the rag to the top of the blocks is at least 100 mm (3.94 in.).

BR1XZ−01

INSPECTION

HINT:

Clean the disassembled parts with compressed air.

1. INSPECT CYLINDER BORE FOR RUST OR SCORING

If necessary, clean or replace the cylinder.

2. INSPECT CYLINDER FOR WEAR OR DAMAGE

If necessary, clean or replace the cylinder.

BR1Y1−01

INSTALLATION

Installation is in the reverse order of removal (See page BR−20).

HINT:

- Before installation, adjust length of the brake booster push rod (see page BR−34).
- After installation, fill the brake reservoir with brake fluid and bleed the brake system (see page BR−4).
- Check for leaks, check and adjust the brake pedal (see page BR−10).
- Check brake pedal height (see page BR−10).
- Check the brake actuator with the hand−held tester (see page BR−62).

BR1Y0–01

REASSEMBLY

Reassembly is in the reverse order of disassembly (See page BR–21).

NOTICE:

Apply lithium soap base glycol grease to the rubber parts indicated by the arrows (See page BR–19).

BR1XX−01

REMOVAL

1. DISCONNECT LEVEL WARNING SWITCH CONNECTOR

2. TAKE OUT FLUID WITH SYRINGE

NOTICE:

Do not let brake fluid remain on a painted surface. Wash it off immediately.

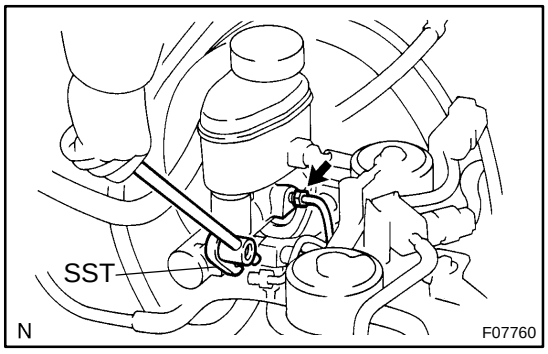

3. DISCONNECT BRAKE LINES

Using SST, disconnect the 5 brake lines from the master cylinder and 3−way.

SST 09023−00101

Torque: 15 N·m (155 kgf·cm, 11 ft·lbf)

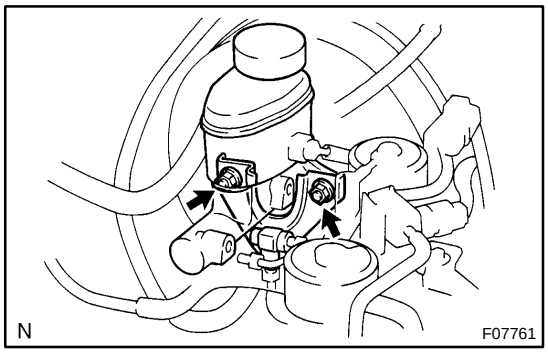

4. REMOVE MASTER CYLINDER

(a) Remove the 2 nuts, wire harness bracket, 3−way and check valve bracket.

Torque: 13 N·m (130 kgf·cm, 9 ft·lbf)

(b) Pull out the master cylinder from the brake booster.

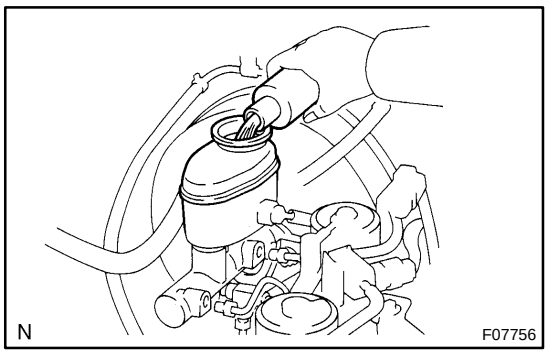

BRAKE FLUID

BR1XV−01

BLEEDING

1. BLEED BRAKE LINE (W/O VSC, STANDARD CAB/ACCESS CAB)

HINT:

If any work is done on the brake system or if air is suspected in the brake lines, bleed the air from the system.

NOTICE:

Do not let brake fluid remain on a painted surface. Wash it off immediately.

(a) Fill reservoir with brake fluid.

Check the fluid level in the reservoir after bleeding each wheel. Add fluid, if necessary.

Fluid: SAE J1703 or FMVSS No. 116 DOT3

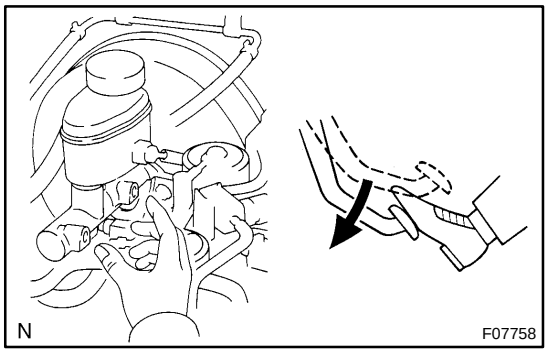

(b) Bleed master cylinder.

HINT:

If the master cylinder was disassembled or if the reservoir becomes empty, bleed the air from the master cylinder.

(1) Disconnect the brake lines from the master cylinder.

SST 09023−00101

(2) Slowly depress the brake pedal and hold it.

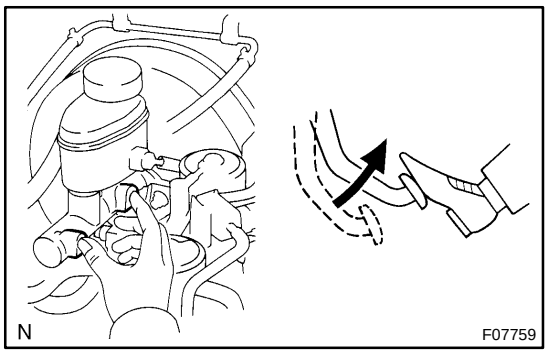

(3) Block off the outlet plug with your finger, and release the brake pedal.

(4) Repeat (2) and (3) 3 or 4 times.

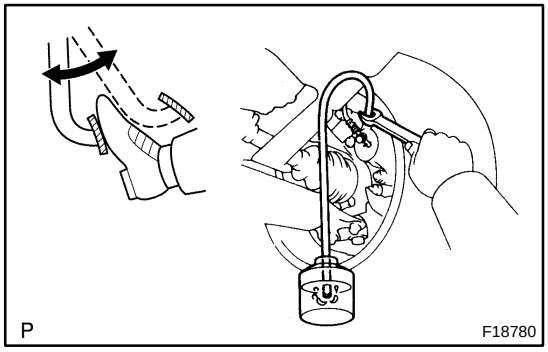

(c) Bleed brake line.

(1) Connect the vinyl tube to the caliper.

(2) Depress the brake pedal several times, then loosen the bleeder plug with the pedal held down.

(3) At the point when fluid stops coming out, tighten the bleeder plug, then release the brake pedal.

(4) Repeat (2) and (3) until all the air in the fluid has been bled out.

Torque: (Bleeder plug) 11 N·m (110 kgf·cm, 8 ft·lbf)

(5) Repeat the above procedure for each wheel to bleed the air out of the brake line.

(d) Check fluid level in reservoir.
Check the fluid level and add fluid if necessary.
Fluid: SAE J1703 or FMVSS No. 116 DOT3

2. BLEED BRAKE LINE (W/O VSC, DOUBLE CAB)

HINT:
If any work is done on the brake system or if air is suspected in the brake lines, bleed the air from the system.

NOTICE:

- **Bleed air from the chassis, 3rd chamber, and chassis in order.**
- **When the air is bled from the 3rd chamber, be sure to run the engine.**
- **If the brake fluid attaches to any painted surfaces, wash it off immediately.**

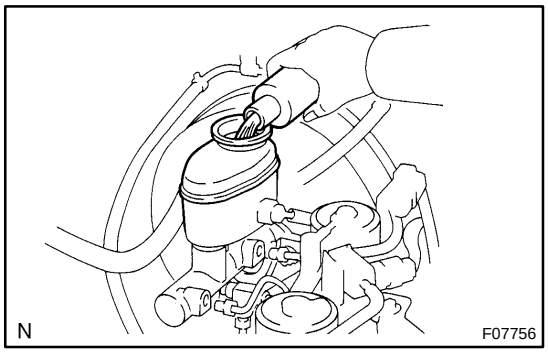

(a) Fill reservoir with brake fluid.
Check the fluid level in the reservoir after bleeding each wheel. Add fluid, if necessary.
Fluid: SAE J1703 or FMVSS No. 116 DOT3

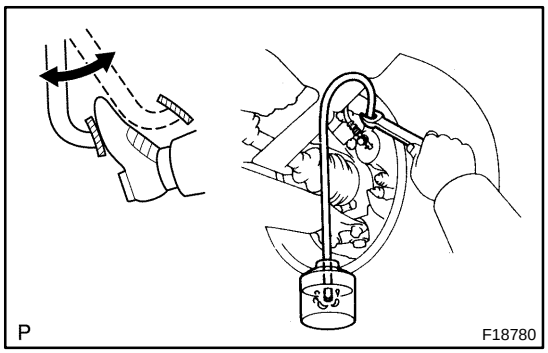

(b) Bleed brake line.

(1) Connect the vinyl tube to the brake caliper bleeder plug.

(2) Depress the brake pedal several times, then loosen the bleeder plug with the pedal held down.

(3) At the point when the fluid stops coming out, tighten the bleeder plug, then release the brake pedal.

(4) Repeat (2) and (3) until all the air in the fluid has been bled out.

Torque: (Bleeder plug) 11 N·m (110 kgf·cm, 8 ft·lbf)

(5) Repeat the above procedures for each wheel to bleed the air out of the brake line.

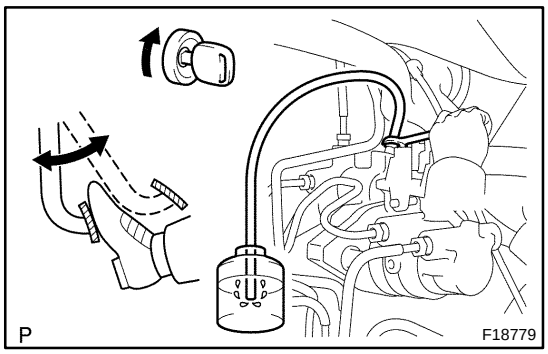

(c) Bleed master cylinder.

NOTICE:

When the air is bled from the master cylinder (3rd chamber), be sure to run the engine.

HINT:

After disassembling the master cylinder, or if the reservoir becomes empty, bleed the air from the master cylinder.

(1) Run the engine at idle.
(2) Connect the vinyl tube to the master cylinder and the brake caliper or wheel cylinder bleeder plug.
(3) Open the brake caliper bleed plug or wheel cylinder bleeder plug.
(4) Depress the brake pedal several times, then loosen the master cylinder (3rd chamber) bleeder plug with the pedal held down.
(5) When the fluid stops coming out, tighten the master cylinder (3rd chamber) bleeder plug, then release the brake pedal.
(6) Repeat (4) and (5) until all the air in the fluid has been bled out.
(7) Tighten the master cylinder (3rd chamber) bleeder plug.

Torque: 11 N·m (110 kgf·cm, 8 ft·lbf)

(8) Tighten the brake caliper bleeder plug or wheel cylinder bleeder plug.

Torque: 11 N·m (110 kgf·cm, 8 ft·lbf)

(9) Stop the engine.

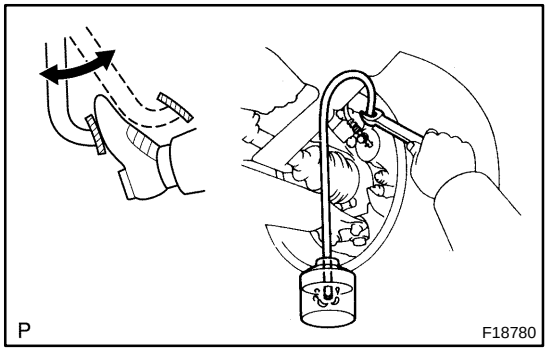

(d) Bleed brake line.

(1) Connect the vinyl tube to the brake caliper.
(2) Depress the brake pedal several times, then loosen the bleeder plug with the pedal held down.
(3) When the fluid stops coming out, tighten the bleeder plug, then release the brake pedal.
(4) Repeat (2) and (3) until all the air in the fluid has been bled out.

Torque: (Bleeder plug) 11 N·m (110 kgf·cm, 8 ft·lbf)

(5) Repeat the above procedures for each wheel to bleed the air out of the brake line.

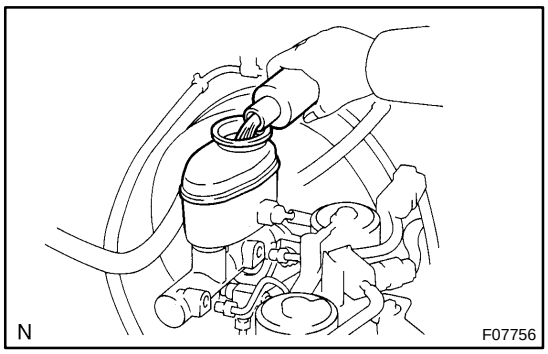

(e) Check fluid level in reservoir.
Check the fluid level and add fluid if necessary.
Fluid: SAE J1703 or FMVSS No. 116 DOT3

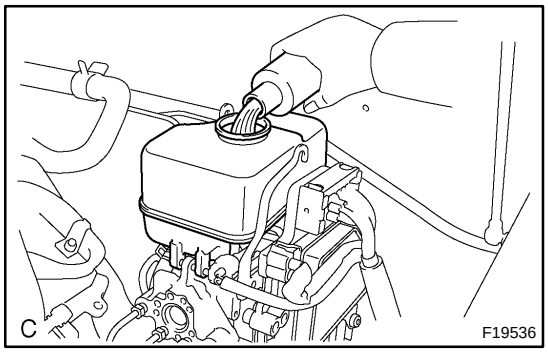

3. BLEED BRAKE LINE (W/VSC)

(a) Fill reservoir with brake fluid.
Check the fluid level in the reservoir after bleeding each wheel. Add fluid, if necessary.
Fluid: SAE J1703 or FMVSS No.116 DOT3

(b) Bleed hydraulic brake booster.
(1) Turn the ignition switch to the ON position and wait until the pump motor has stopped.

HINT:
Pump operating sound can be heard.

(2) Turn the ignition switch off and depress the brake pedal more than 20 times.

HINT:
When pressure in the accumulator is released, reaction force becomes light and stroke becomes longer.

(3) Repeat (1) and (2) 5 times.
(4) Make sure that the interval between pump start and pump stop is 8 to 14 seconds.

If it takes 14 seconds or more, repeat (3).

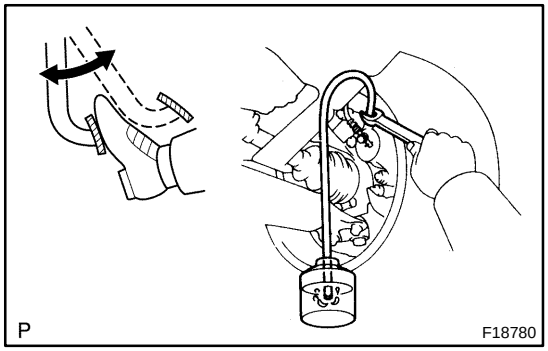

(c) Bleed front brake line.
(1) Turn the ignition switch to the ON position and wait until the pump motor has stopped.

HINT:
Pump operating sound can be heard.

(2) Connect the vinyl tube to the brake caliper.
(3) Depress the brake pedal several times, then loosen the bleeder plug with the pedal held down.
(4) When the fluid stops coming out, tighten the bleeder plug, then release the brake pedal.
(5) Repeat (3) ant (4) until all the air in the fluid has been bled out.
Torque: (Bleeder plug) 11 N·m (110 kgf·cm, 8 ft·lbf)
(6) Repeat the above procedures for each wheel to bleed the air out of the brake line.

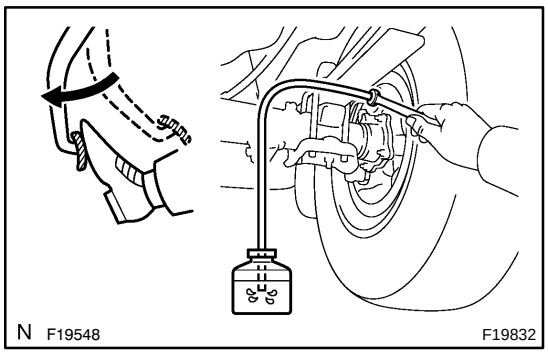

(d) Bleed rear brake line.

(1) Turn the ignition switch to the ON position and wait until the pump motor has stopped.

HINT:

Pump operating sound can be heard.

(2) Connect the vinyl tube to the wheel cylinder.

(3) Depress the brake pedal, hold it, and then loosen the bleeder plug.

HINT:

Brake fluid is pumped out automatically.

NOTICE:

Keep brake fluid in the reservoir tank above the MIN line during the above procedures.

(4) When air does not come out with brake fluid anymore, tighten the bleeder plug and release the brake pedal.

Torque: (Bleeder plug) 11 N·m (110 kgf·cm, 8 ft·lbf)

(5) Repeat the above procedures for each wheel to bleed the air out of the brake line .

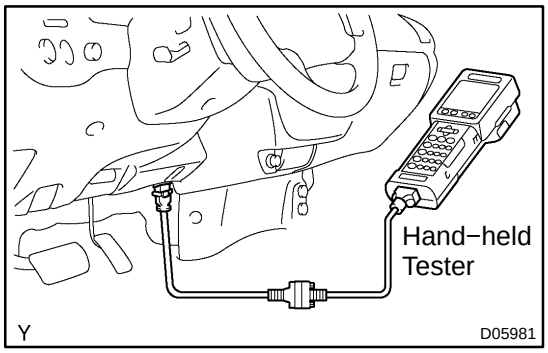

(e) Hydraulic brake booster disassembly:

Bleed hydraulic brake booster.

NOTICE:

When disassembling the hydraulic brake booster, bleed the air from the hydraulic brake booster by following the procedures below.

(1) Connect the hand−held tester to the DLC3.

(2) Turn the ignition switch to the ON position.

HINT:

- Pump operating sound can be heard.
- Please refer to the hand−held tester operator's manual for further details.

(3) Select "ACTIVE TEST" mode on the hand−held tester.

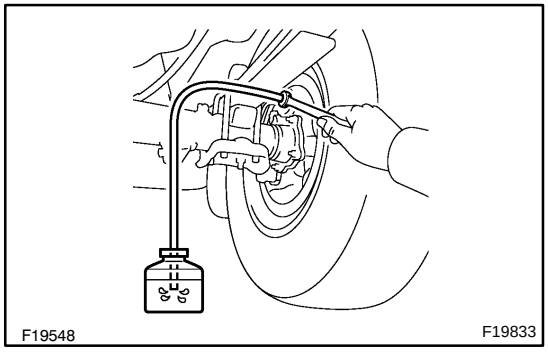

(4) Connect the vinyl tube to the rear wheel cylinder.

(5) Loosen the bleeder plug

(6) Select "SRMF & SRMR" on the "ACTIVE TEST" of the hand−held tester to drive solenoids.

NOTICE:

- **Do not depress the brake pedal.**
- **Keep brake fluid in the reservoir tank above the MIN line during the above procedures.**

HINT:

- Pump operating sound can be heard.
- Brake fluid is pumped out automatically.
- To protect the solenoids, the hand−held tester turns OFF automatically 2 sec. after every solenoid has been turned ON.

(7) Repeat (6) until the air is completely bled out of brake fluid.

(8) When air does not come out with brake fluid, tighten the bleeder plug.

Torque: (Bleeder plug) 11 N·m (110 kgf·cm, 8 ft·lbf)

(9) Repeat the above procedures for each wheel to bleed the air out of the brake line .

(10) Turn the ignition switch off.

(11) Turn the ignition switch on again.

(12) Clear DTCs (see page DI−1397 or DI−1497).

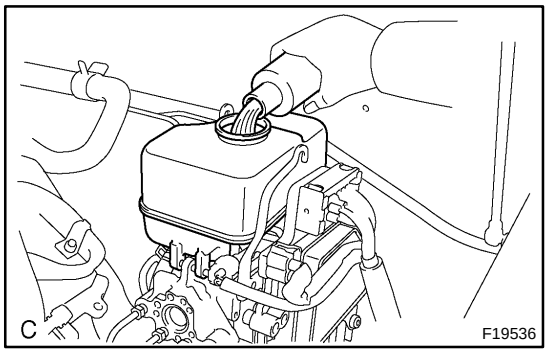

(f) Check fluid level in reservoir.

(1) Turn the ignition switch off and depress the brake pedal more than 20 times.

HINT:

When pressure in the accumulator is released, reaction force becomes light and stroke becomes longer.

(2) Add brake fluid up to the MAX line of the reservoir tank.

Fluid: SAE J1703 or FMVSS No.116 DOT3

HINT:

When the ignition switch is turned to the ON position, brake fluid is sent to the accumulator. The brake fluid level drops by 5 mm when the ignition switch is off, which is normal.

BR108−07

COMPONENTS

Automatic Transmission:

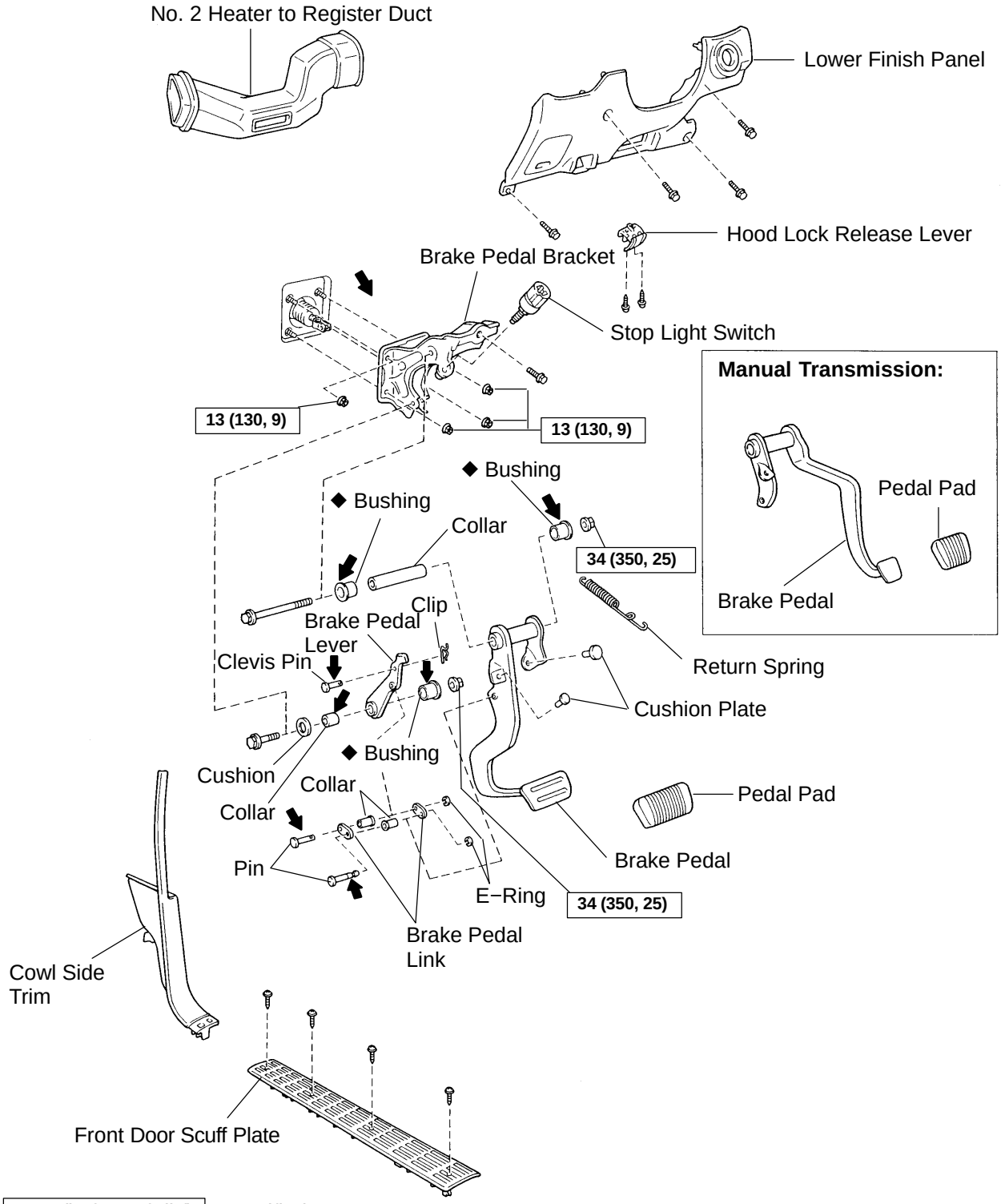

N·m (kgf·cm, ft·lbf) : Specified torque

◆ Non−reusable part

➔ Lithium soap base glycol grease

N

F08200

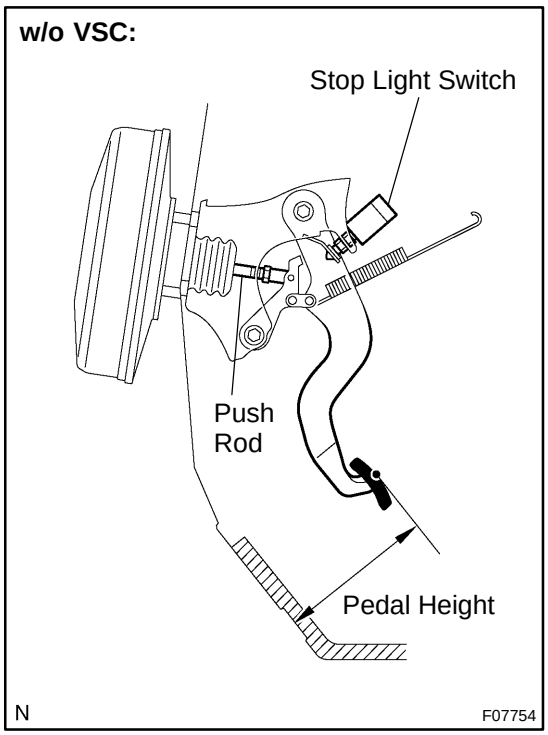

BRAKE PEDAL

BR1WB−02

ON−VEHICLE INSPECTION

1. CHECK PEDAL HEIGHT (W/O VSC)

Pedal height from dash panel:

Standard, access cab:

163.6 to 173.6 mm (6.44 to 6.83 in.)

Double cab:

151.1 to 165.1 mm (5.95 to 6.50 in.)

NOTICE:

Do not adjust the pedal height. Doing so by changing the push rod length will structurally change the pedal ratio.

2. CHECK AND ADJUST STOP LIGHT SWITCH

(a) Disconnect the connector from the stop light switch.

(b) Turn the stop light switch until it lightly contacts the pedal stopper.

(c) Connect the connector to the stop light switch.

(d) Push in the brake pedal 5 to 15 mm (0.20 to 0.59 in), turn the stop light switch to lock the nut in the position where the stop light goes off.

(e) After installation, push in the brake pedal 5 to 15 mm (0.20 to 0.59 in.) and check that the stop light lights up.

(f) After adjusting the stop light switch, check the pedal height and the pedal free play.

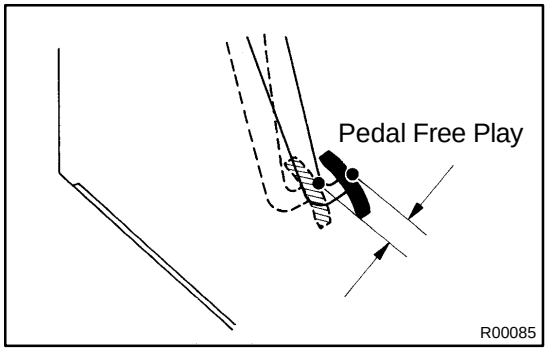

3. CHECK PEDAL FREE PLAY (W/O VSC)

(a) Stop the engine and depress the brake pedal several times until there is no more vacuum left in the booster.

(b) Push in the pedal by hand until the second point of resistance begins to be felt, then measure the distance as shown in the illustration.

Pedal free play: 1 to 6 mm (0.04 to 0.24 in.)

If incorrect, check the stop light switch clearance. If the clearance is OK, then troubleshoot the brake system.

Stop light switch clearance:

0.5 to 2.4 mm (0.020 to 0.094 in.)

HINT:

The free play to the first point of resistance is due to the play between the clevis and pin. It is 1 to 3 mm (0.04 to 0.12 in.) at the pedal.

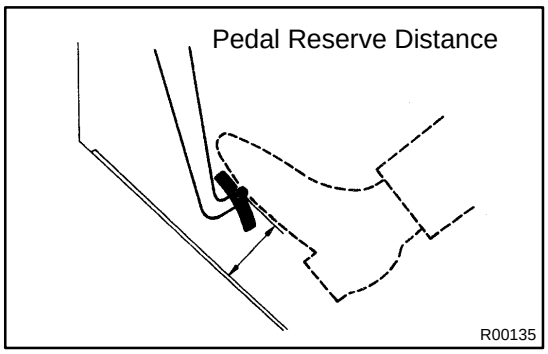

4. CHECK PEDAL RESERVE DISTANCE (W/O VSC)

Release the parking brake.

With the engine running, depress the pedal and measure the pedal reserve distance, as shown in the illustration.

Pedal reserve distance from asphalt sheet at 490 N (50 kgf, 110.2 lbf): More than 95 mm (3.74 in.)

If the reserve distance is incorrect, troubleshoot the brake system.

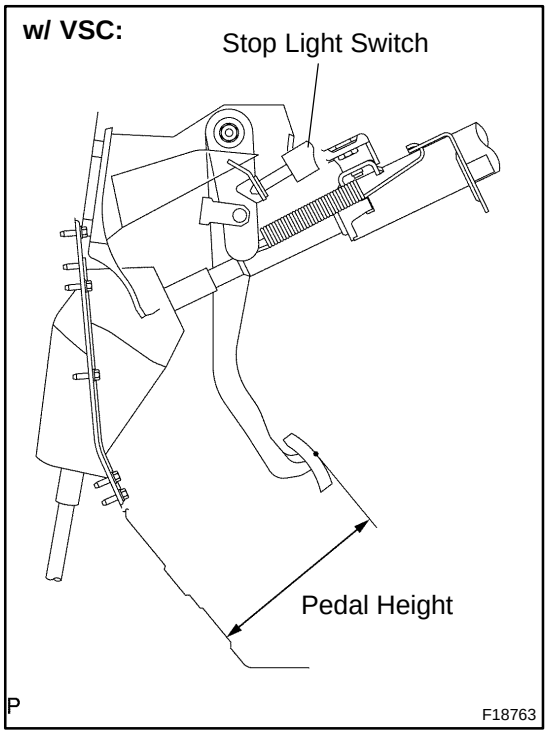

5. CHECK PEDAL HEIGHT (w/ VSC)

Pedal height from dash panel:

Standard, access cab:

164.0 to 174.0 mm (6.46 to 6.85 in.)

Double cab:

151.1 to 165.1 mm (5.95 to 6.50 in.)

6. IF NECESSARY, ADJUST PEDAL HEIGHT (w/ VSC)

(a) Remove the scuff plate LH, cowl side trim LH, lower finish panel and No. 2 heater to register duct (see page BO−111).

(b) Disconnect the connector from the stop light switch.

(c) Loosen the stop light switch lock nut and remove the stop light switch.

(d) Loosen the push rod lock nut.

(e) Adjust the pedal height by turning the pedal push rod.

(f) Tighten the clevis lock nut.

Torque: 25.5 N·m (260 kgf·cm, 19 ft·lbf)

(g) Install the stop light switch and turn it until it lightly contacts the pedal stopper.

(h) Connect the connector to the stop light switch.

(i) Push in the brake pedal 5 to 15 mm (0.20 to 0.59 in), turn the stop light switch to lock the nut in the position where the stop light goes off.

(j) After installation, push in the brake pedal 5 to 15 mm (0.20 to 0.59 in.) and check that the stop light lights up.

(k) After adjusting the pedal height, check the pedal free play.

(l) Install the No. 2 heater to register duct, lower finish panel, cowl side trim LH and scuff plate LH.

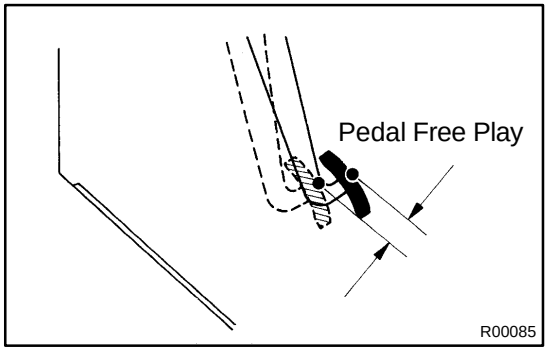

7. CHECK PEDAL FREE PLAY (w/ VSC)

(a) Stop the engine and depress the brake pedal several times until there is no more vacuum left in the booster.

(b) Push in the pedal by hand until the second point of resistance begins to be felt, then measure the distance as shown in the illustration.

Pedal free play: 1 to 6 mm (0.04 to 0.24 in.)

If incorrect, check the stop light switch clearance. If the clearance is OK, then troubleshoot the brake system.

Stop light switch clearance:
0.5 to 2.4 mm (0.020 to 0.094 in.)

HINT:
The free play to the first point of resistance is due to the play between the clevis and pin. It is 1 to 3 mm (0.04 to 0.12 in.) at the pedal.

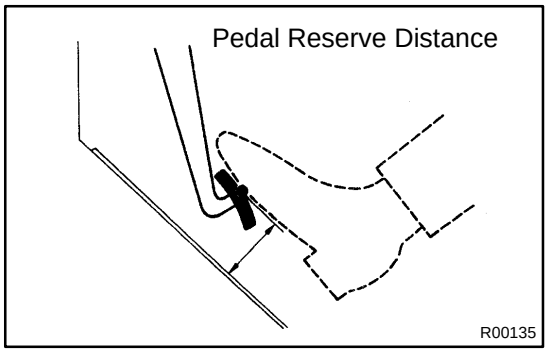

8. CHECK PEDAL RESERVE DISTANCE (w/ VSC)

Release the parking brake.
With the engine running, depress the pedal and measure the pedal reserve distance, as shown in the illustration.

Pedal reserve distance from asphalt sheet at 490 N (50 kgf, 110.2 lbf): More than 95 mm (3.74 in.)

If the reserve distance is incorrect, troubleshoot the brake system.

BRAKE SYSTEM

BR0A9−05

PRECAUTION

- **Care must be taken to replace each part properly as it could affect the performance of the brake system and result in a driving hazard. Replace the parts with parts having the same part number or equivalent.**
- **It is very important to keep parts and the area clean when repairing the brake system.**
- **If the vehicle is equipped with a mobile communication system, refer to the precautions in the IN section.**

BR1WQ−02

INSTALLATION

- **Installation is in the reverse order of removal (See page BR−103).**
- **Perform the deceleration sensor zero point calibration (See page DI−1474).**

DECELERATION SENSOR

BR1WP−02

REMOVAL

1. Passenger side:
REMOVE FRONT SEAT (See page BO−141, BO−155, BO−166, BO−177 or BO−188)

2. REMOVE DECELERATION SENSOR

(a) Disconnect the connector.

(b) Remove the 2 nuts and sensor.
Torque: 12.5 N·m (128 kgf·cm, 9 ft·lbf)

FRONT BRAKE CALIPER

BR10L−04

COMPONENTS

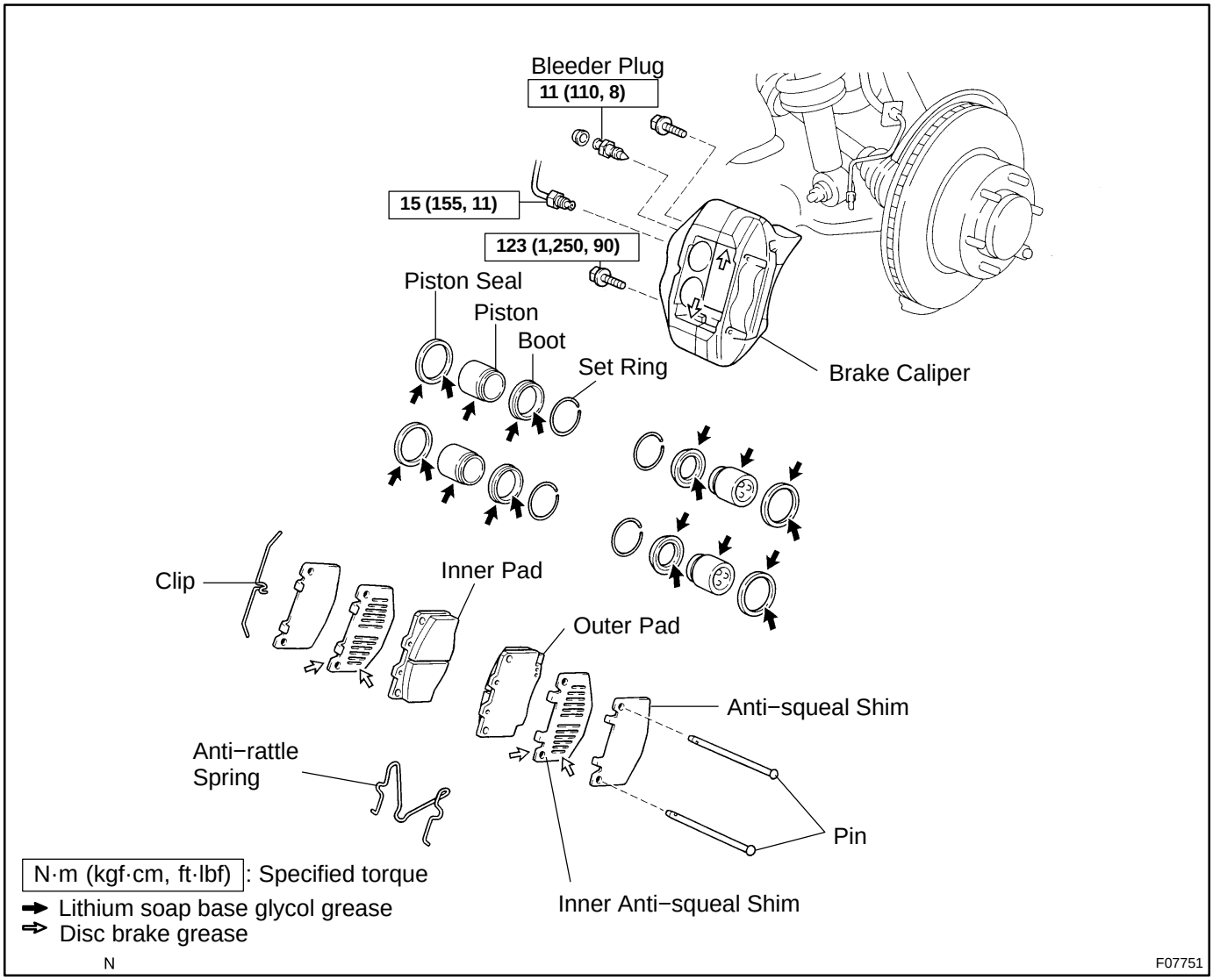

BR10N−04

DISASSEMBLY

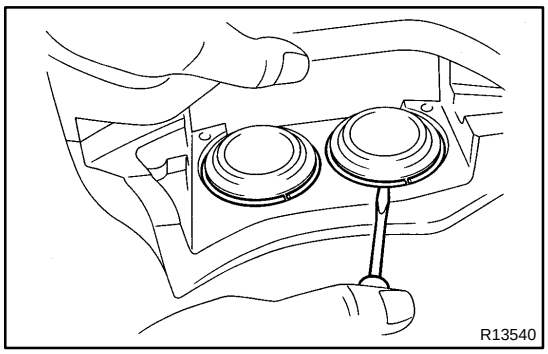

1. REMOVE CYLINDER BOOT SET RINGS AND BOOTS

Using a screwdriver, remove the 4 cylinder boot set rings and boots.

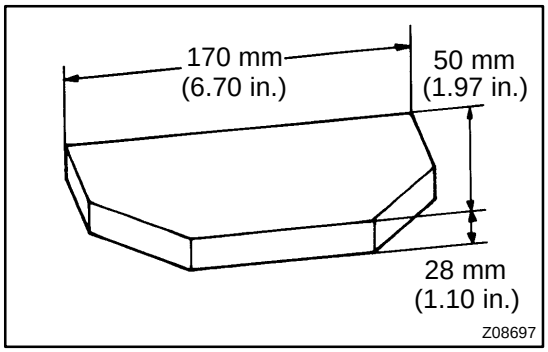

2. REMOVE PISTONS FROM CYLINDER

(a) Prepare a wooden plate to hold the pistons.

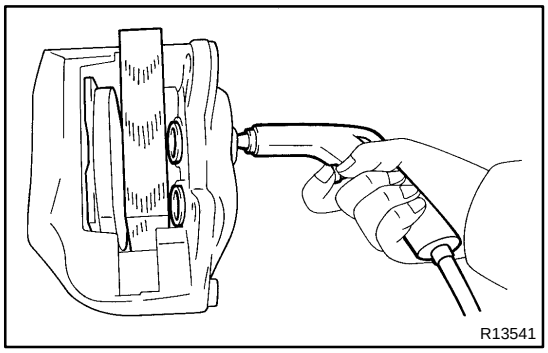

(b) Place the plate between the pistons and insert a pad at one side.

(c) Use compressed air to remove the pistons alternately from the cylinder.

CAUTION:

Do not place your fingers in front of the pistons when using compressed air.

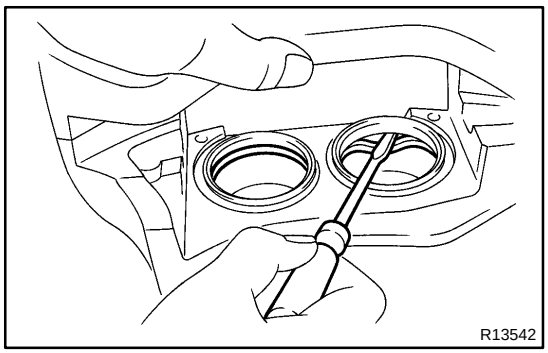

3. REMOVE PISTON SEALS

Using a screwdriver, remove the 4 piston seals from the cylinder.

BR10O−05

INSPECTION

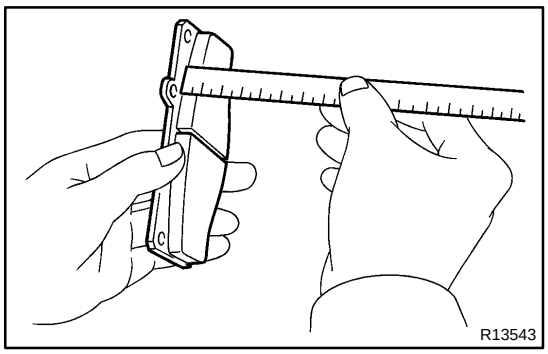

1. MEASURE PAD LINING THICKNESS

Using a ruler, measure the pad lining thickness.

Standard thickness: 11.5 mm (0.453 in.)

Minimum thickness: 1.0 mm (0.039 in.)

Replace the pad if the thickness is less than the minimum (the 1.0 mm slit is no longer visible), or if it shows signs of uneven wear.

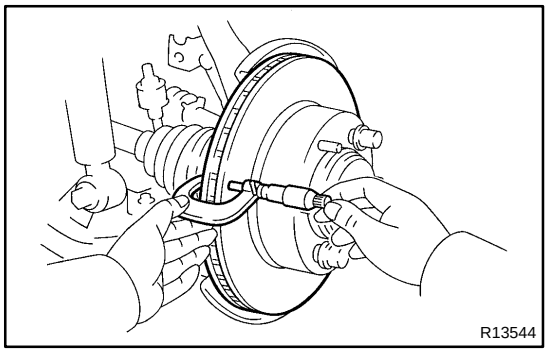

2. MEASURE DISC THICKNESS

Using a micrometer, measure the disc thickness.

Standard thickness: 28.0 mm (1.102 in.)

Minimum thickness: 26.0 mm (1.024 in.)

Replace the disc if the thickness of the disc is at the minimum or less. Replace the disc or grind it on a lathe if it is scored or worn unevenly.

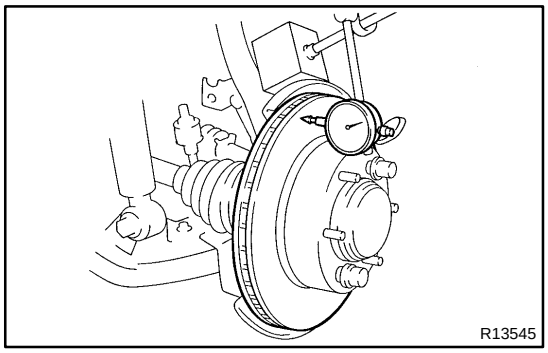

3. MEASURE DISC RUNOUT

Using a dial indicator, measure the disc runout at a position 10 mm (0.39 in.) from the outside edge.

Maximum disc runout: 0.07 mm (0.0028 in.)

If the runout is greater than the maximum, replace the disc or grind it on an ”On−Car” brake lathe.

HINT:

Before measuring the runout, confirm that the front hub bearing play is within specifications (see page SA−20).

4. IF NECESSARY, ADJUST DISC RUNOUT

(a) Remove the hub nuts and disc. Reinstall the disc 1/6 of a turn round from its original position on the hub. Install and torque the hub nuts.

Torque: 113 N·m (1,150 kgf·cm, 83 ft·lbf)

(b) Remeasure the disc runout. Make a note of the runout and the disc’s position on the hub.

(c) Repeat (a) and (b) until the disc has been installed on the 4 remaining hub positions.

If the minimum runout recorded in (a) to (c) is less than the maximum disc runout, install the disc in that position.

If the minimum runout recorded in (a) to (c) is greater than the maximum disc runout, replace the disc and repeat step 3.

BR10Q−04

INSTALLATION

Installation is in the reverse order of removal (See page BR−42).

HINT:

- After installation, fill the brake reservoir with brake fluid and bleed the brake system (See page BR−4).
- Check for leaks.

BR10P−04

REASSEMBLY

Reassembly is in the reverse order of disassembly (See page BR−43).

NOTICE:

Apply lithium soap base glycol grease and disc brake grease to the parts indicated by the arrows (See page BR−41).

BR10M−04

REMOVAL

1. REMOVE FRONT WHEEL

Remove the wheel and temporarily fasten the disc with hub nuts.

Torque: 113 N·m (1,150 kgf·cm, 83 ft·lbf)

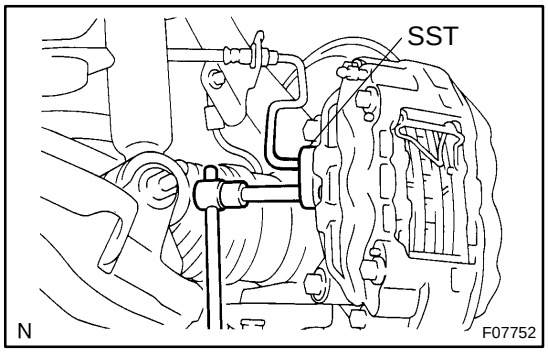

2. DISCONNECT BRAKE LINE

Using SST, disconnect the brake line. Use a container to catch brake fluid.

SST 09023−00101

Torque: 15 N·m (155 kgf·cm, 11 ft·lbf)

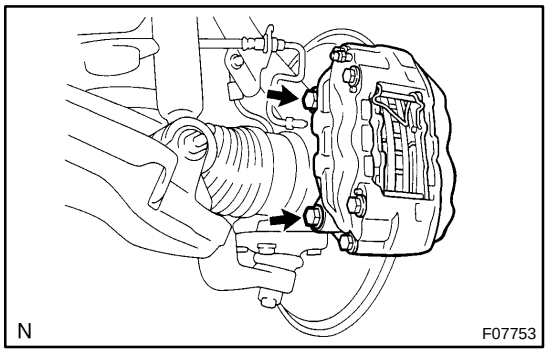

3. REMOVE CALIPER

Remove the 2 mounting bolts and caliper.

Torque: 123 N·m (1,250 kgf·cm, 90 ft·lbf)

4. REMOVE CLIP, 2 PINS AND ANTI−RATTLE SPRING

5. REMOVE 2 PADS AND 4 ANTI−SQUEAL SHIMS

NOTICE:

The anti−rattle spring and clip can be used again provided that they have sufficient rebound, no deformation, cracks or wear, and have had all rust, dirt and foreign particles cleaned off.

FRONT BRAKE PAD

COMPONENTS

BR10J−05

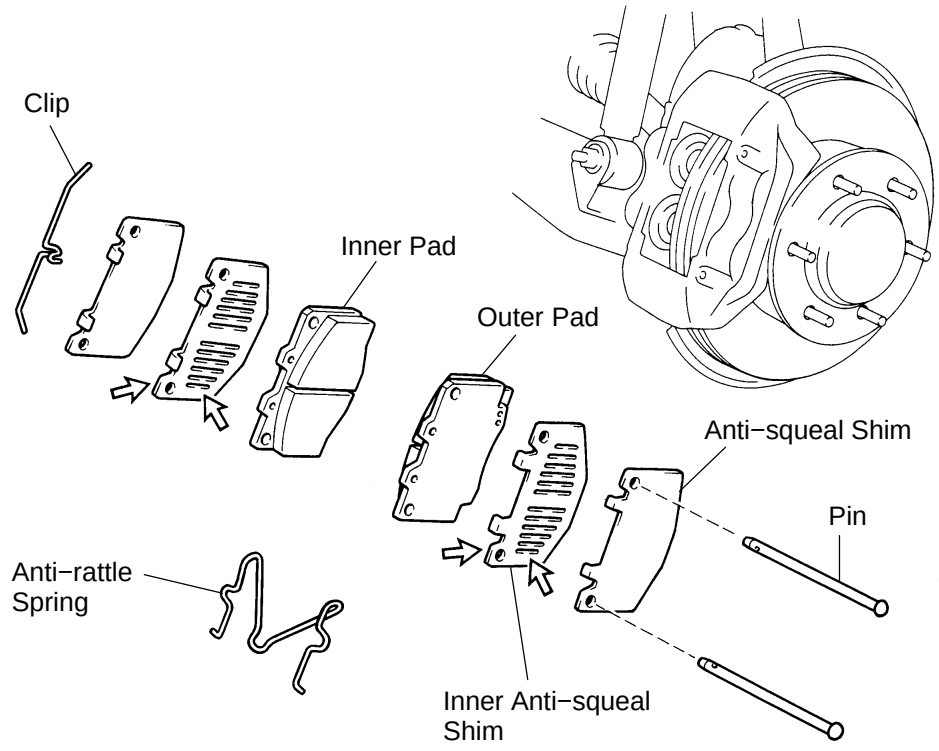

⇨ Disc brake grease

N

F07750

BR10K−05

REPLACEMENT

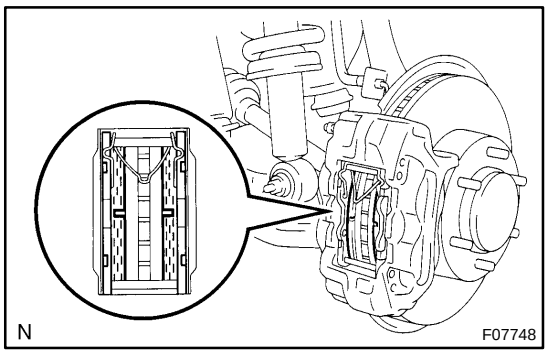

1. REMOVE FRONT WHEEL

2. INSPECT PAD LINING THICKNESS

Check the pad thickness and replace pads if not within specification.

Minimum thickness: 1.0 mm (0.039 in.)

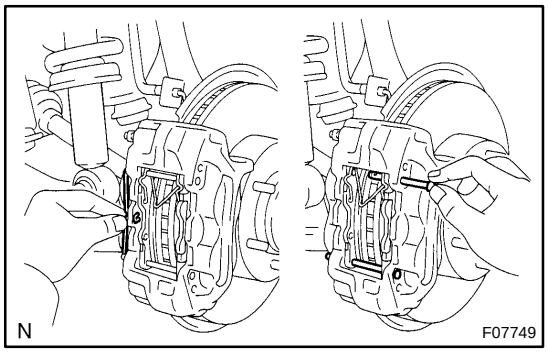

3. REMOVE CLIP, 2 PINS AND ANTI−RATTLE SPRING

4. REMOVE 2 PADS AND 4 ANTI−SQUEAL SHIMS

NOTICE:

The anti−rattle spring and clip can be used again provided that they have sufficient rebound, no deformation, cracks or wear, and have had all rust, dirt and foreign particles cleaned off.

5. CHECK DISC THICKNESS AND RUNOUT

(See page BR−44)

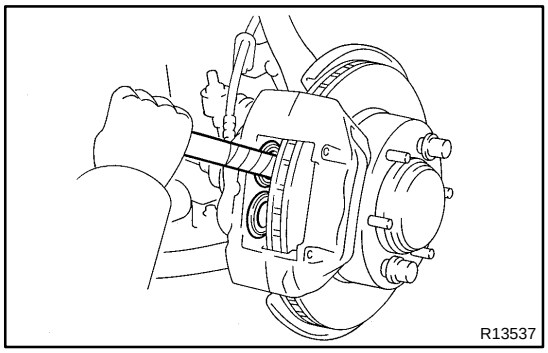

6. INSTALL NEW PADS

NOTICE:

When replacing worn pads, the anti−squeal shims must be replaced together with the pads.

(a) Draw out a small amount of brake fluid from the reservoir.

(b) Press in the pistons with a monkey wrench handle or equivalent.

HINT:

- Tape the monkey wrench handle before use.
- Always change the pads on one wheel at a time as there is a possibility of the opposite piston flying out.
- If the piston is difficult to push in, loosen the bleeder plug and push in the piston while letting some brake fluid escape.

(c) Install the anti−squeal shims to new pads.

HINT:

Apply disc brake grease to both sides of the inner anti−squeal shims (See page BR−39).

(d) Install new pads.

NOTICE:

Do not allow oil or grease to come in contact with the rubbing face.

7. INSTALL ANTI−RATTLE SPRING AND 2 PINS

8. INSTALL CLIP

9. INSTALL FRONT WHEEL

Torque: 113 N·m (1,150 kgf·cm, 83 ft·lbf)

10. DEPRESS BRAKE PEDAL SEVERAL TIMES

11. CHECK THAT FLUID LEVEL IS AT MAX LINE

FRONT SPEED SENSOR

COMPONENTS

BR0A2−06

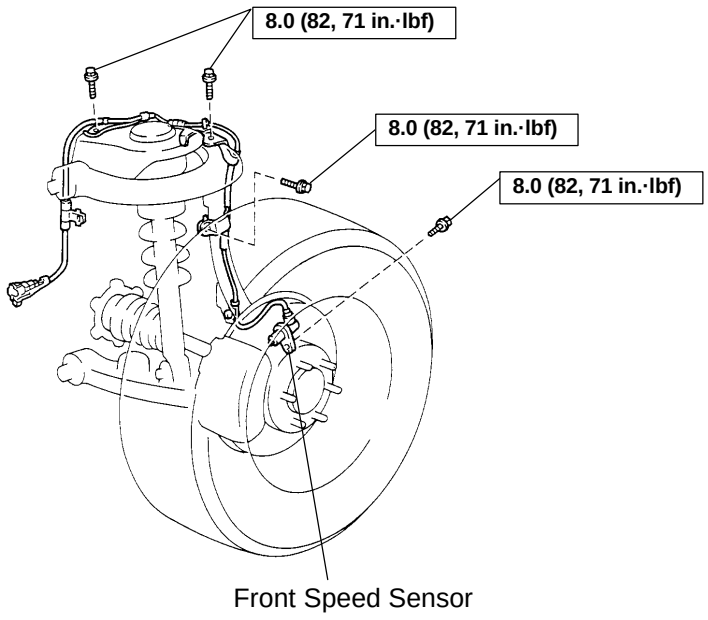

N·m (kgf·cm, ft·lbf) : Specified torque

F08184

BR0A4−08

INSTALLATION

Installation is in the reverse order of removal (See page BR−95).

HINT:

After installation, check the speed sensor signal (See page DI−1387 or DI−1478).

BR0A3−05

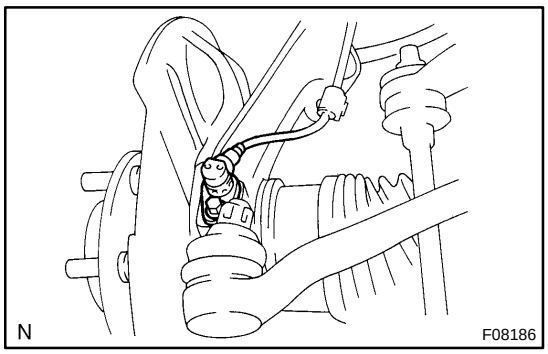

REMOVAL

1. REMOVE FRONT WHEEL

Torque: 113 N·m (1,150 kgf·cm, 83 ft·lbf)

2. DISCONNECT SPEED SENSOR CONNECTOR

3. REMOVE SPEED SENSOR

(a) Remove the 2 clips and 3 clamp bolts holding the sensor harness from the frame, upper arm and steering knuckle.

Torque: 8.0 N·m (82 kgf·cm, 71 in.·lbf)

(b) Remove the bolt and speed sensor from the steering knuckle.

Torque: 8.0 N·m (82 kgf·cm, 71 in.·lbf)

BR1Y9−01

COMPONENTS

w/ VSC

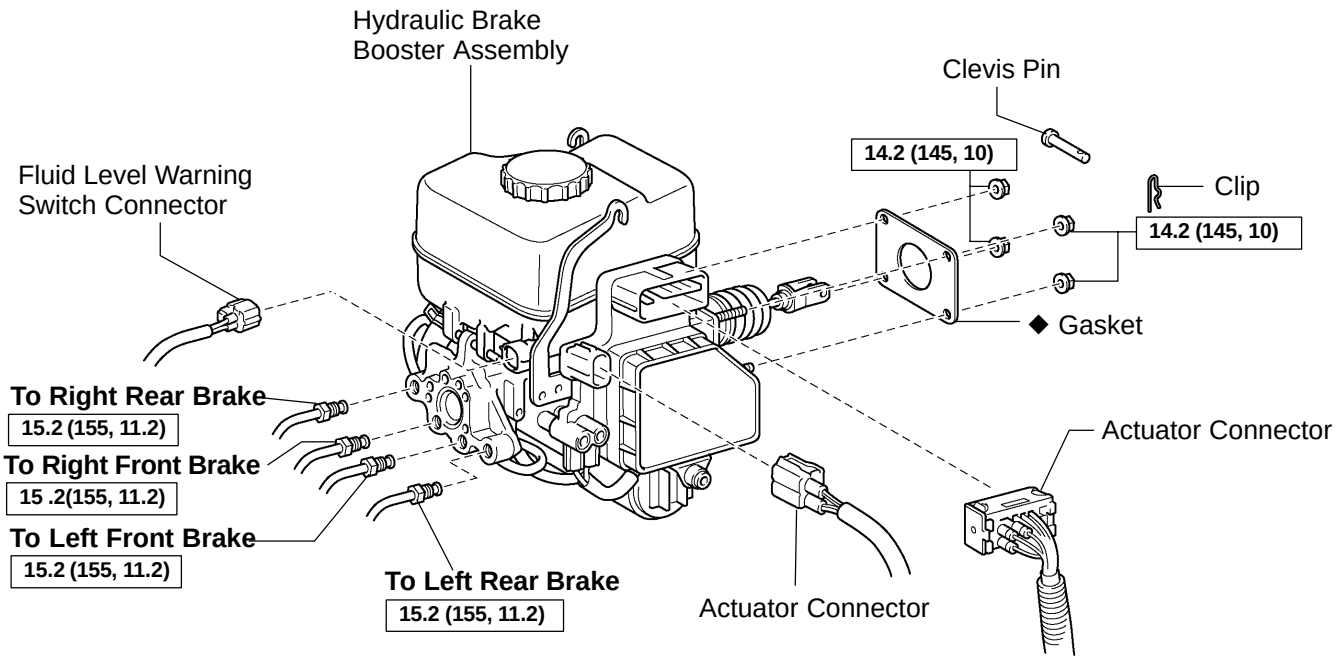

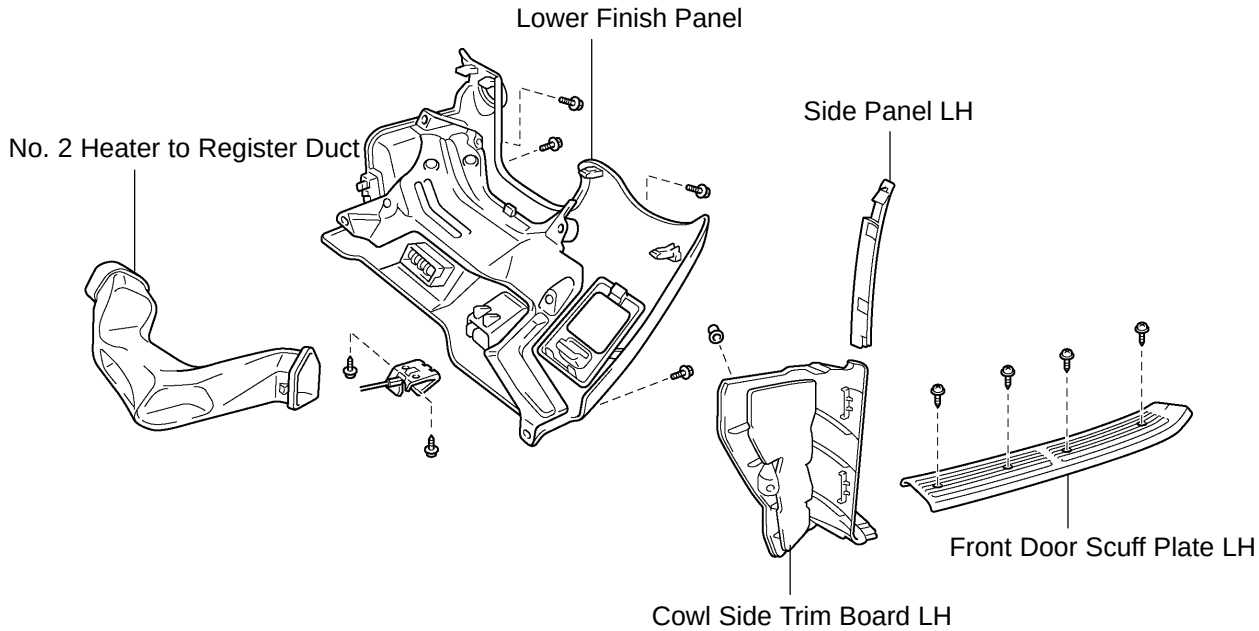

N·m (kgf·cm, ft·lbf) : Specified torque

◆ Non−reusable part

F19541

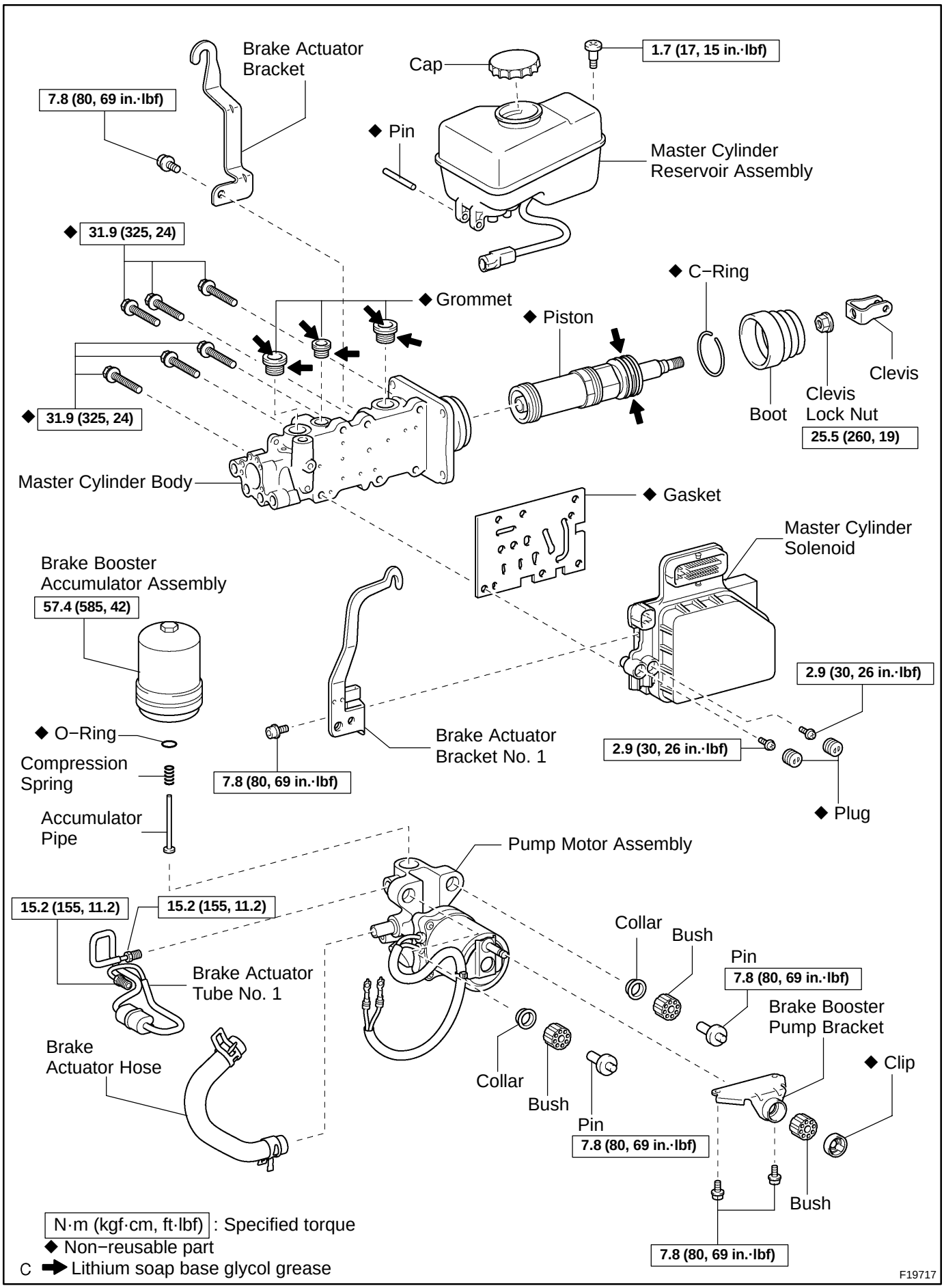
Brake Actuator Bracket
7.8 (80, 69 in.·lbf)
Cap
1.7 (17, 15 in.·lbf)
◆ Pin
Master Cylinder Reservoir Assembly
◆ 31.9 (325, 24)
◆ Grommet
◆ C−Ring
◆ Piston
Clevis
Boot
Clevis Lock Nut
25.5 (260, 19)
◆ 31.9 (325, 24)
Master Cylinder Body
◆ Gasket
Master Cylinder Solenoid
Brake Booster Accumulator Assembly
57.4 (585, 42)
2.9 (30, 26 in.·lbf)
◆ O−Ring
Compression Spring
Accumulator Pipe
Brake Actuator Bracket No. 1
7.8 (80, 69 in.·lbf)
2.9 (30, 26 in.·lbf)
◆ Plug
Pump Motor Assembly
15.2 (155, 11.2)
15.2 (155, 11.2)
Collar
Bush
Pin
7.8 (80, 69 in.·lbf)
Brake Booster Pump Bracket
Brake Actuator Tube No. 1
Brake Actuator Hose
Collar
Bush
Pin
7.8 (80, 69 in.·lbf)
◆ Clip
Bush
7.8 (80, 69 in.·lbf)
N·m (kgf·cm, ft·lbf) : Specified torque
◆ Non−reusable part
C ➡ Lithium soap base glycol grease
F19717

BR1YB−01

DISASSEMBLY

NOTICE:

As high pressure is applied to the brake actuator tube No. 1, do not deform it.

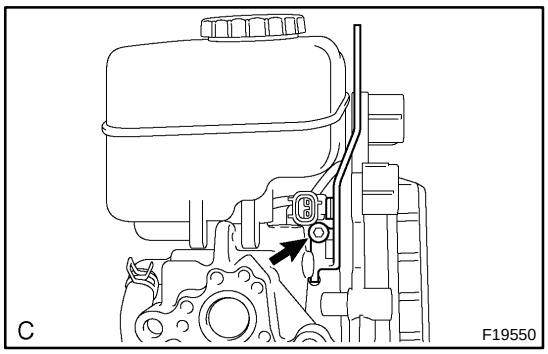

1. REMOVE BRAKE ACTUATOR BRACKET NO. 1

(a) Using a hexagon wrench (5 mm), remove the screw and brake actuator bracket No. 1 from the hydraulic brake booster assembly.

Torque: 7.8 N·m (80 kgf·cm, 69 in.·lbf)

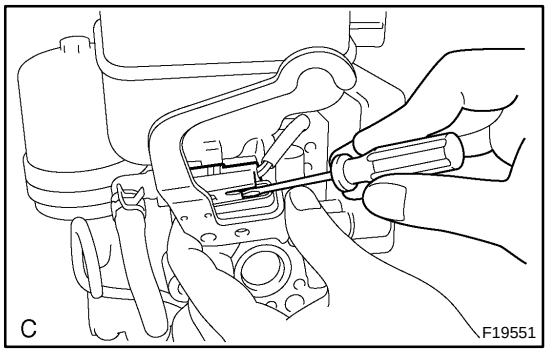

(b) Using a screwdriver, remove the fluid level warning switch connector from the brake actuator bracket No. 1.

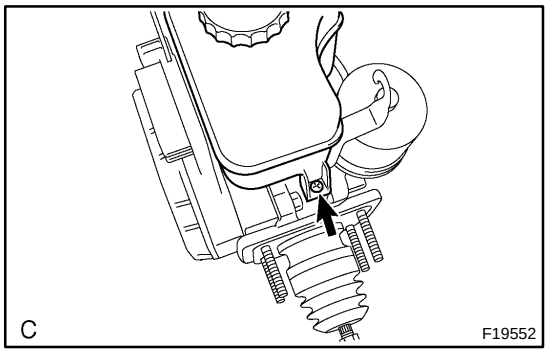

2. REMOVE MASTER CYLINDER RESERVOIR ASSEMBLY

(a) Remove the screw from the master cylinder reservoir assembly.

Torque: 1.7 N·m (17 kgf·cm, 15 in.·lbf)

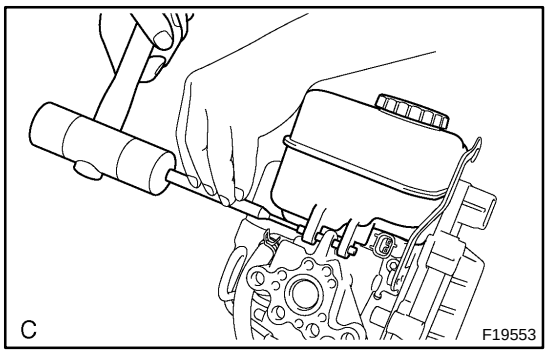

(b) Using a pin punch and hammer, remove the pin from the master cylinder reservoir assembly.

(c) Pull out the master cylinder reservoir assembly from the hydraulic brake booster assembly.

(d) Remove the 3 grommets from the master cylinder reservoir assembly.

(e) Remove the cap from the master cylinder reservoir assembly.

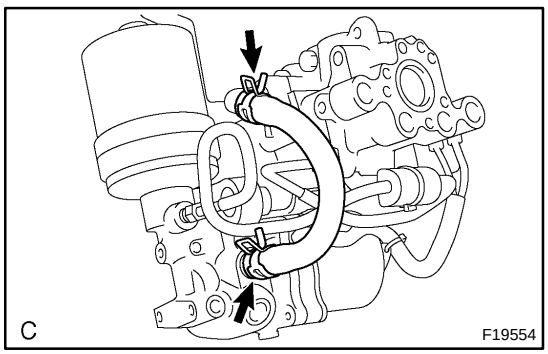

3. REMOVE BRAKE ACTUATOR HOSE

(a) Using needle nose pliers, slide the 2 clips.

(b) Remove the brake actuator hose from the hydraulic brake booster assembly.

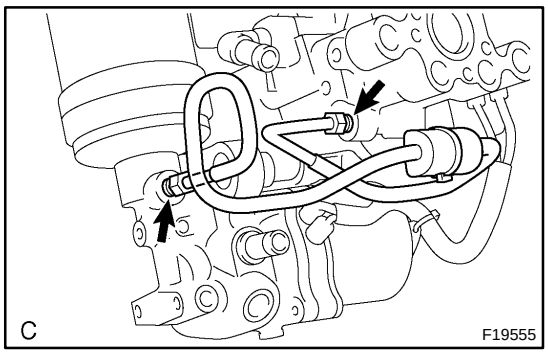

4. REMOVE BRAKE ACTUATOR TUBE NO. 1

(a) Using SST, remove the brake actuator tube No. 1 from the hydraulic brake booster assembly.
Torque: 15.2 N·m (155 kgf·cm, 11.2 ft·lbf)

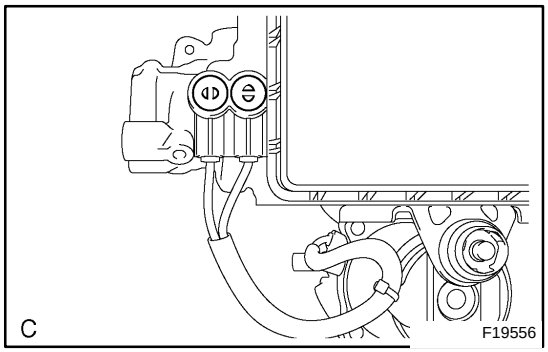

5. REMOVE BRAKE BOOSTER W/ ACCUMULATOR

(a) Using a screwdriver, remove the 2 plugs from the hydraulic brake booster assembly.

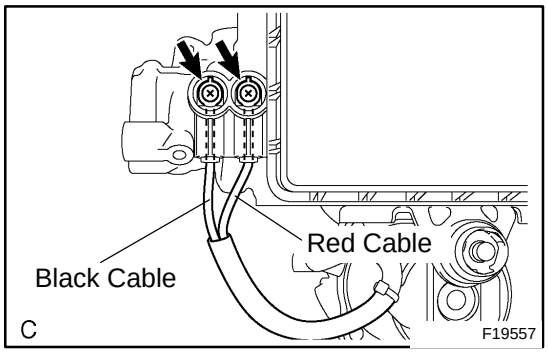

(b) Remove the 2 screws and pull the wire harness from the hydraulic brake booster assembly.
Torque: 2.9 N·m (30 kgf·cm, 26 in.·lbf)

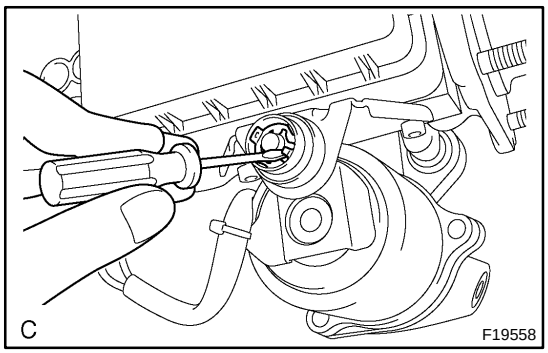

(c) Using a screwdriver, remove the clip from the hydraulic brake booster assembly.

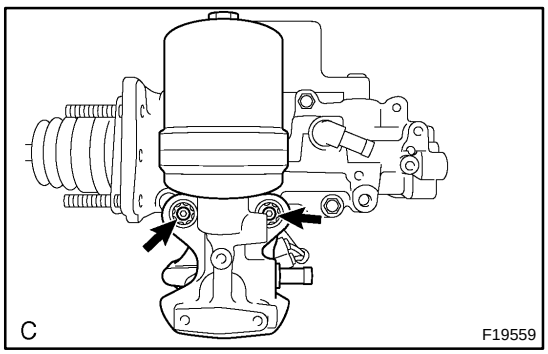

(d) Using a hexagon wrench (4 mm), loosen the 2 pins and brake booster w/ accumulator pump assembly from the hydraulic brake booster assembly.
Torque: 7.8 N·m (80 kgf·cm, 69 in.·lbf)

(e) Remove the 2 pins, 2 bushes and 2 collars from the brake booster w/ accumulator pump assembly.

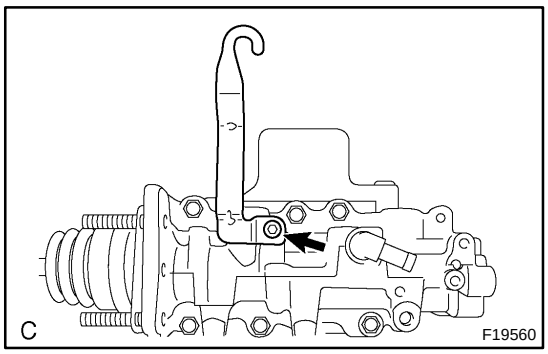

6. REMOVE BRAKE ACTUATOR BRACKET

Using a hexagon wrench (5 mm), remove the screw and brake actuator bracket from the hydraulic brake booster assembly.

Torque: 7.8 N·m (80 kgf·cm, 69 in.·lbf)

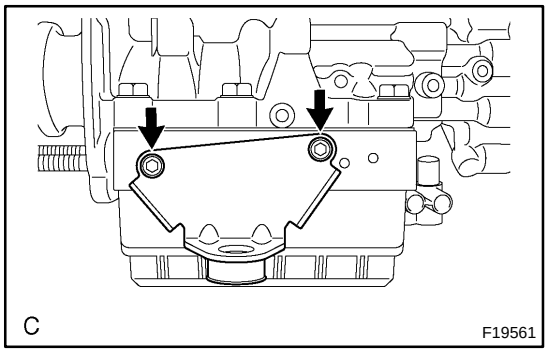

7. REMOVE BRAKE BOOSTER PUMP BRACKET

(a) Using a hexagon wrench (5 mm), remove the 2 screws and brake booster pump bracket from the hydraulic brake booster assembly.

Torque: 7.8 N·m (80 kgf·cm, 69 in.·lbf)

(b) Remove the bush from the brake booster pump bracket.

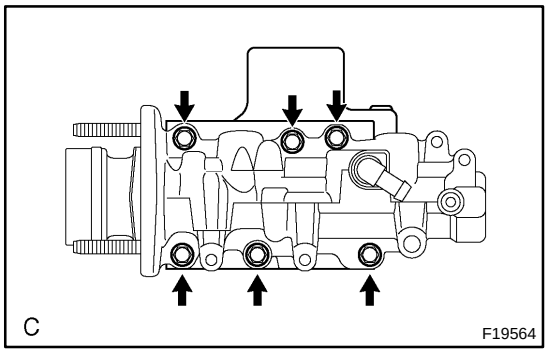

8. REMOVE MASTER CYLINDER SOLENOID

(a) Remove the 6 bolts.

Torque: 31.9 N·m (325 kgf·cm, 24 ft·lbf)

(b) Remove the master cylinder solenoid and the gasket from the master cylinder body.

NOTICE:

Do not let water, dust, and/or other objects attach to the surface and/or attaching surface of the master cylinder solenoid, master cylinder and body gasket.

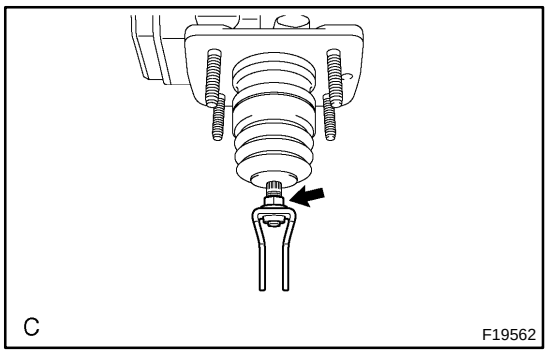

9. REMOVE CLEVIS

(a) Loosen the clevis lock nut.

Torque: 25.5 N·m (260 kgf·cm, 19 ft·lbf)

(b) Remove the clevis and clevis lock nut from the hydraulic brake booster assembly.

10. REMOVE BOOT

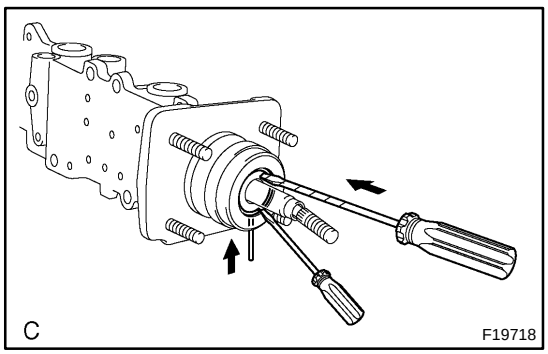

11. REMOVE PISTON

(a) Pressing the piston in with a screwdriver, use a pin or equivalent to push the C−ring from the hole in the master cylinder body then remove it with another screwdriver.

(b) Remove the piston, pulling it straight out, not at an angle.

NOTICE:

- **If pulled out at an angle, there is a possibility that the cylinder bore could be damaged.**
- **During reassembly, be careful not to damage the rubber lips of the piston.**

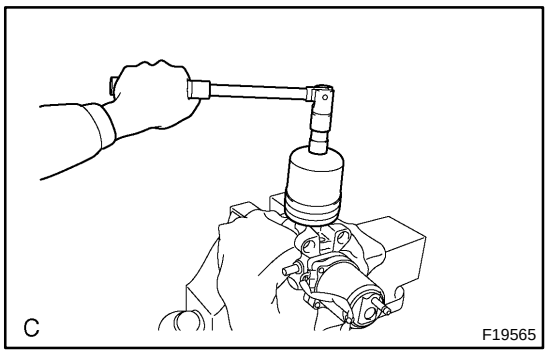

12. REMOVE BRAKE BOOSTER ACCUMULATOR ASSEMBLY

(a) Place the brake booster w/ accumulator pump assembly in a vise between a cloth.

(b) Using a socket wrench (17 mm), remove the brake booster accumulator assembly from the pump motor assembly.
Torque: 57.4 N·m (585 kgf·cm, 42 ft·lbf)

(c) Remove the brake accumulator pipe, compression spring and O−ring from the brake booster accumulator assembly and the pump motor assembly.

BR1YD−01

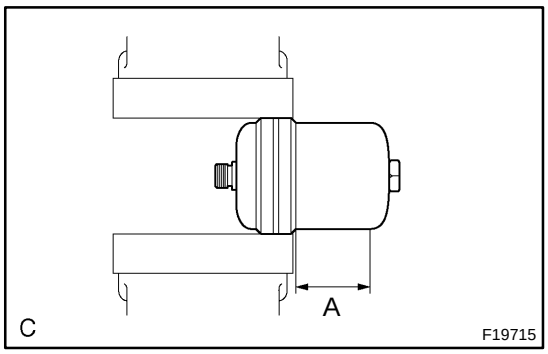

DISPOSAL

DISPOSAL METHOD OF BRAKE BOOSTER ACCUMULATOR ASSEMBLY

(a) Place the brake booster accumulator assembly in a vise and cover it with cloth.

(b) Carefully cut a hole in area A of the brake accumulator assembly shown in the illustration on the left using a saw and discharge the gas remaining inside.

CAUTION:

- **Cover with a piece of cloth when working because gas and liquid may blow out.**
- **Carefully, not abruptly, cut the assembly.**
- **Wear protective glasses.**

(c) When the outer body of the brake booster accumulator assembly is cut, gas and liquid discharge.

HINT:

- The gas is colorless, odorless and harmless nitrogen gas.
- The liquid is brake fluid.

BR1YC−01

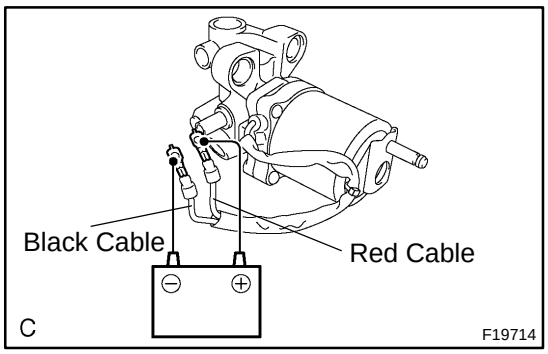

INSPECTION

INSPECT HYDRAULIC BRAKE BOOSTER PUMP MOTOR ASSEMBLY OPERATION

(a) Connect the positive (+) lead from the battery to the red cable of the pump motor, and the negative (−) lead to the black cable.

(b) Check pump motor operation.
OK: Normal operating sound is heard.

BR1YF−01

INSTALLATION

Installation is in the reverse order of removal (See page BR−84).

HINT:

- After installation, fill the brake reservoir with brake fluid and bleed the brake system (See page BR−4).
- Check for leaks.

HYDRAULIC BRAKE BOOSTER (w/ VSC)

BR1Y8−01

ON−VEHICLE INSPECTION

1. CHECK HYDRAULIC BRAKE BOOSTER FLUID PRESSURE CHANGE

(a) Inspect the battery voltage.
Battery voltage: 10 to 14 V

(b) Turn the ignition switch off, and depress the brake pedal more than 20 times.

HINT:
When pressure in the accumulator power supply system is released, reaction force becomes light and stroke becomes longer.

(c) Install the brake pedal effort gauge (SST), and bleed air.
SST 09709−29018

(d) When booster does not operate:
Depress the brake pedal and check fluid pressure.
At 245 N (25 kgf, 55 lbf):

Front brake pressure	Rear brake pressure
2,050 to 3650 kPa (20.9 to 37.2 kgf/cm^2, 297 to 529 psi)	0 kPa (0 kgf/cm^2, 0 psi)

At 343 N (35 kgf, 77 lbf):

Front brake pressure	Rear brake pressure
3,270 to 4870 kPa (33.3 to 50 kgf/cm^2, 474 to 711 psi)	0 kPa (0 kgf/cm^2, 0 psi)

(e) When booster operates:
(1) Turn the ignition switch on and wait until the pump motor has stopped.

HINT:
Pump operating sound can be heard.

(2) Turn the ignition switch off, and depress the brake pedal more than 20 times.

HINT:
When pressure in the accumulator is released, reaction force becomes light and stroke becomes longer.

(3) Repeat (1) and (2) 5 times.
(4) Make sure that the interval between pump start and pump stop is 8 to 14 seconds.

If it takes 14 seconds or more, repeat (3).

(5) Depress the brake pedal and check fluid pressure.

At 49 N (5 kgf, 11 lbf):

Front brake pressure	Rear brake pressure
933 to 2,533 kPa (9.5 to 25.8 kgf/cm^2, 135 to 367 psi)	993 to 1,888 kPa (10.1 to 19.3 kgf/cm^2, 144 to 274 psi)

At 98 N (10 kgf, 22 lbf):

Front brake pressure	Rear brake pressure
3,109 to 4,709 kPa (31.7 to 48.0 kgf/cm^2, 451 to 683 psi)	2,087 to 3,181 kPa (21.3 to 32.4 kgf/cm^2, 303 to 461 psi)

At 147 N (15 kgf, 33 lbf):

Front brake pressure	Rear brake pressure
5,284 to 6,884 kPa (53.9 to 70.2 kgf/cm^2, 766 to 998 psi)	3,713 to 5,311 kPa (37.9 to 54.2 kgf/cm^2, 539 to 770 psi)

At 196 N (20 kgf, 44 lbf):

Front brake pressure	Rear brake pressure
7,460 to 9,060 kPa (76.1 to 92.4 kgf/cm^2, 1,082 to 1,314 psi)	5,843 to 7,441 kPa (59.6 to 75.9 kgf/cm^2, 848 to 1,079 psi)

2. INSPECT HYDRAULIC BRAKE BOOSTER OPERATION

(a) Inspect the battery voltage.

Battery voltage: 10 to 14 V

(b) Turn the ignition switch off, and depress the brake pedal more than 20 times.

HINT:

When pressure in the accumulator power supply system is released, reaction force becomes light and stroke becomes longer.

(c) Check that the brake pedal becomes light to depress.

If the pedal does not become light to depress, check and replace the brake line and hydraulic brake booster.

(d) Turn the ignition switch on, and check the pump motor operation noise.

If the pump motor does not operate, check and replace the wire harness and pump motor (See page BR−90).

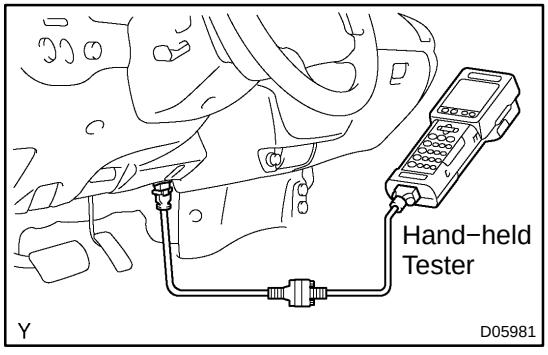

(e) Connect the hand−held tester.

(1) Connect the hand−held tester to the DLC3.

(2) Turn the ignition switch on.

(3) Select ”ACTIVE TEST” mode on the hand−held tester.

HINT:

- Please refer to the hand−held tester operator’s manual for further details.
- To protect solenoids, hand−held tester turns off automatically 2 sec. after every solenoid has been turned on.

3. INSPECTION PROCEDURE

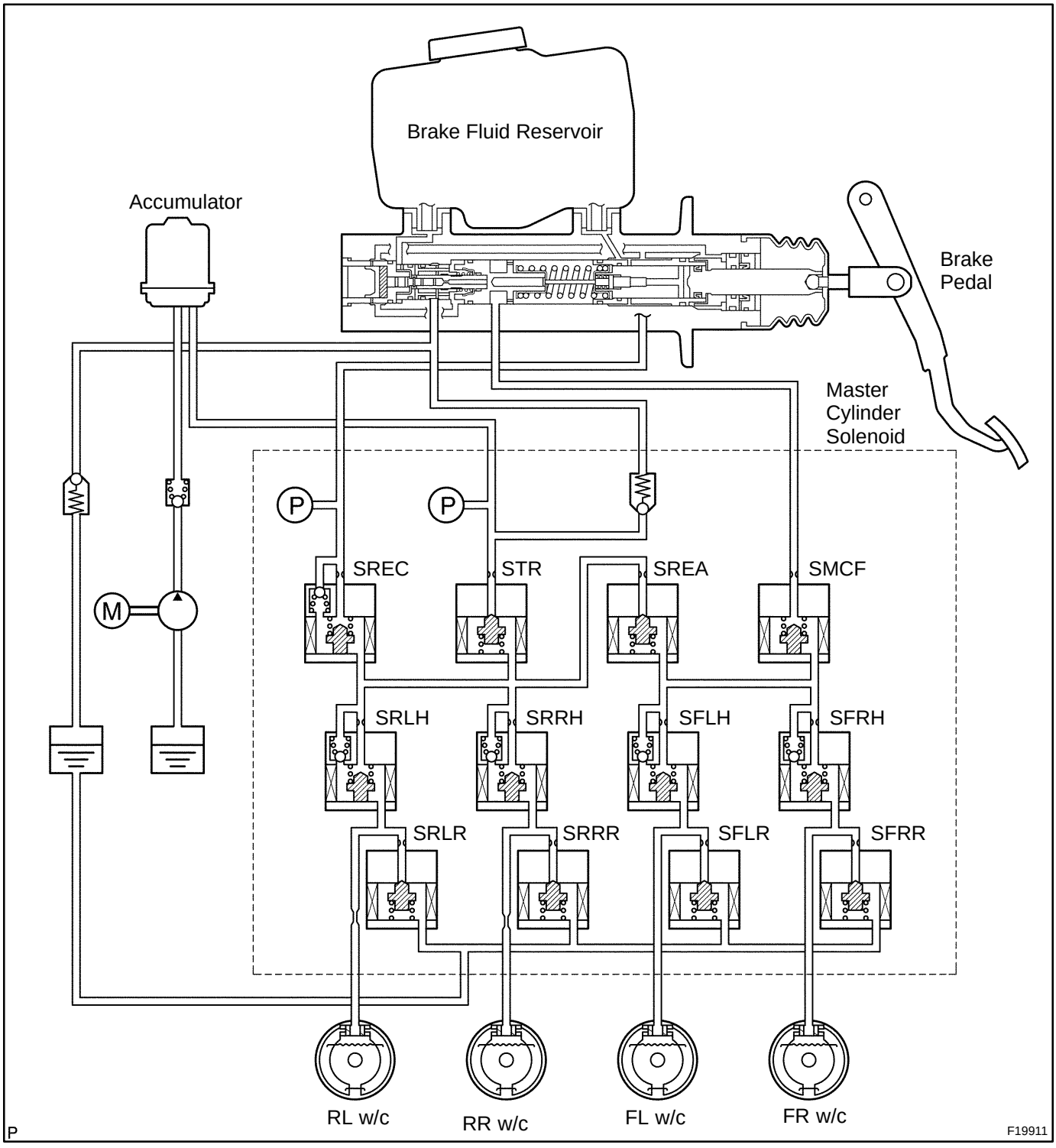

Inspection order (step)	SOL selected by active test	SOL to be activated
(a)	SRCF (SA1)	SMCF
(c)	SRCF (SA1) and SRCR (SA2)	SREA and SMCF
(d)	SFRH	SFRH
(e)	SFLH	SFLH
(f)	SFRR & SFRH	SFRR and SFRH
(g)	SFLR & SFLH	SFLR and SFLH
(h)	SRMF (SMCF, SA3)	SREC
(i)	SRMF (SMCF, SA3) and SRMR (SMCR, STR)	STR and SREC
(j)	SRRH	SRRH
(k)	SRLH	SRLH
(l)	SRH & SRR	SRRR and SRRH
(m)	SRLR & SRLH	SRLR and SRLH

(a) Inspect front VSC solenoid (SMCF) operation.

HINT:

- ON: Activate SMCF and check that the brake pedal cannot be depressed (the pedal feels tight).
- OFF: Deactivate SMCF and check that the brake pedal can be depressed.
  (1) Select ”SRCF (SA1)” on the hand−held tester.
  (2) Turn the ”SRCF (SA1)” on by the hand−held tester, then depress the brake pedal with stable force and check that the pedal cannot be depressed.

If the pedal can be depressed, replace the hydraulic brake booster.

HINT:

To protect the solenoids, the hand−held tester turns off automatically 2 seconds after every solenoid has been turned on.

NOTICE:

When operating it continuously, set the interval of more than 20 seconds.

(3) Release the brake pedal.
(4) When the solenoid is off, depress the brake pedal again and check that the brake pedal can be depressed.

If the pedal can be depressed, replace the hydraulic brake booster.

(b) PREPARE THE VEHICLE
(1) Jack up and support the vehicle.
(2) Release the parking brake lever.
(3) Shift the transfer shift lever to the ”N” position and check the rear wheels by rotating them by hand.

(c) Inspect front VSC solenoid (SREA) operation.

HINT:

- ON: Activate SREA and SMCF, depress the brake pedal, and then check that the front wheels do not rotate.
- OFF: Deactivate SREA and SMCF. Reactivate SMCF, depress the brake pedal, and then check that the front wheels rotate.
  (1) Select ”SRCR (SA2)” and ”SRCF (SMCF)” on the hand−held tester.
  (2) Turn the ”SRCR (SA2)” and ”SRCF (SMCF)” on simultaneously by the hand−held tester, then depress the brake pedal with stable force.
  (3) When the solenoids are on, check that the front wheels do not rotate by hand.

If the front wheels rotate, replace the hydraulic brake booster.

NOTICE:

When operating it continuously, set the interval of more than 20 seconds.

HINT:

- To protect the solenoids, the hand−held tester turns off automatically 2 seconds after every solenoid has been turned on.
- When rotating the wheels fast, the fail−safe function is activated and judgement cannot be made properly.
  So rotate the wheels as slowly as possible.
  (4) When the solenoids are off, turn the ”SRCF (SMCF)” on again, then depress the brake pedal and check the front wheels by rotating them by hand.

If front wheels stop, replace the hydraulic brake booster.

(5) When the ”SRCF (SMCF)” is off, depress the brake pedal again and check that the brake pedal can be depressed.

If the pedal can be depressed, replace the hydraulic brake booster.

(d) Inspect front ABS solenoid (SFRH) operation.

HINT:

- ON: Activate SFRH, depress the brake pedal, and then check that the right front wheel rotates.
- OFF: Deactivate SFRH, depress the brake pedal, and then check that the front right wheel does not rotate.
  (1) Select ”SFRH” on the hand−held tester.
  (2) Turn the ”SFRH” on by the hand−held tester, then depress the brake pedal with stable force.
  (3) When the solenoid is on, check the right front wheel by rotating it by hand.

If the right front wheel stops, replace the hydraulic brake booster.

NOTICE:

When operating it continuously, set the interval of more than 20 seconds.

HINT:

- To protect the solenoids, the hand−held tester turns off automatically 2 seconds after every solenoid has been turned on.
- When rotating the wheel fast, the fail−safe function is activated and judgement cannot be made properly.
  So rotate the wheel as slowly as possible.
  (4) When the solenoid is off, depress the brake pedal again and check that the right front wheel does not rotate by hand.

If the right front wheel rotates, replace the hydraulic brake booster.

(e) Inspect front ABS solenoid (SFLH) operation.

HINT:

- ON: Activate SFLH, depress the brake pedal, and then check that the left front wheel rotates.
- OFF: Deactivate SFLH, depress the brake pedal, and then check that the front left wheel does not rotate.
  (1) Select ”SFLH” on the hand−held tester.
  (2) Turn the ”SFLH” on by the hand−held tester, then depress the brake pedal with stable force.
  (3) When the solenoid is on, check the left front wheel by rotating it by hand.

If the left front wheel stops, replace the hydraulic brake booster.

NOTICE:

When operating it continuously, set the interval of more than 20 seconds.

HINT:

- To protect the solenoids, the hand−held tester turns off automatically 2 seconds after every solenoid has been turned on.
- When rotating the wheel fast, the fail−safe function is activated and judgement cannot be made properly.
  So rotate the wheel as slowly as possible.
  (4) When the solenoid is off, depress the brake pedal again and check that the left front wheel does not rotate by hand.

If the left front wheel rotates, replace the hydraulic brake booster.

(f) Inspect front ABS solenoid (SFRR) operation.

HINT:

- ON: Depress the brake pedal, activate SFRR and SFRH, and then check that the right front wheel rotates.
- OFF: Deactivate SFRR and SFRH, depress the brake pedal, and then check that the right front wheel does not rotate.
  (1) Select ”SFRR & SFRH” on the hand−held tester.
  (2) Depress the brake pedal with stable force, then turn the ”SFRR & SFRH” on simultaneously by the hand−held tester.
  (3) When the solenoids are on, check the right front wheel by rotating it by hand.

If the right front wheel stops, replace the hydraulic brake booster.

NOTICE:

When operating it continuously, set the interval of more than 20 seconds.

HINT:

- To protect the solenoids, the hand−held tester turns off automatically 2 seconds after every solenoid has been turned on.
- When rotating the wheel fast, the fail−safe function is activated and judgement cannot be made properly.
  So rotate the wheel as slowly as possible.
  (4) When the solenoids are off, depress the brake pedal again and check that the right front wheel does not rotate by hand.

If the right front wheel rotates, replace the hydraulic brake booster.

(g) Inspect front ABS solenoid (SFLR) operation.

HINT:

- ON: Depress the brake pedal, activate SFLR and SFLH, and then check that the left front wheel rotates.
- OFF: Deactivate SFLR and SFLH, depress the brake pedal, and then check that the left front wheel does not rotate.
  (1) Select ”SFLR & SFLH” on the hand−held tester.
  (2) Depress the brake pedal with stable force, then turn the ”SFLR & SFLH” on simultaneously by the hand−held tester.
  (3) When the solenoids are on, check the left front wheel by rotating it by hand.

If the left front wheel stops, replace the hydraulic brake booster.

NOTICE:

When operating it continuously, set the interval of more than 20 seconds.

HINT:

- To protect the solenoids, the hand−held tester turns off automatically 2 seconds after every solenoid has been turned on.
- When rotating the wheel fast, the fail−safe function is activated and judgement cannot be made properly.
  So rotate the wheel as slowly as possible.
  (4) When the solenoids are off, depress the brake pedal again and check that the left front wheel does not rotate by hand.

If the left front wheel rotates, replace the hydraulic brake booster.

(h) Inspect rear VSC solenoid (SREC) operation.

HINT:

- ON: Depress the brake pedal and activate SREC. Release the brake pedal and check that the rear wheels do not rotate.
- OFF: Deactivate SREC and check that the rear wheels rotate.
  (1) Select ”SRMF (SMCF, SA3)” on the hand−held tester.
  (2) Depress the brake pedal with stable force, then turn the ”SRMF (SMCF, SA3)” on by the hand−held tester.
  (3) Release the brake pedal when the solenoid is on, and check that the rear wheels do not rotate by hand.

If the rear wheels rotate, replace the hydraulic brake booster.

NOTICE:

When operating it continuously, set the interval of more than 20 seconds.

HINT:

- To protect the solenoids, the hand−held tester turns off automatically 2 seconds after every solenoid has been turned on.
- When rotating the wheels fast, the fail−safe function is activated and judgement cannot be made properly.
  So rotate the wheels as slowly as possible.
  (4) When the solenoid is off, check the rear wheels by rotating them by hand.

If the rear wheels stop, replace the hydraulic brake booster.

(i) Inspect rear VSC solenoid (STR) operation.

HINT:

- ON: Activate STR and SREC, then check that the rear wheels do not rotate.
- OFF: Deactivate STR and SREC. Reactivate SREC and check that the rear wheels rotate.
  (1) Select ”SRMR (SMCR, STR)” on the hand−held tester.
  (2) Turn the ”SRMR (SMCR, STR)” on simultaneously by the hand−held tester.
  (3) When the solenoids are on, check that the rear wheels do not rotate by hand.

If the rear wheels rotate, replace the hydraulic brake booster.

NOTICE:

When operating it continuously, set the interval of more than 20 seconds.

HINT:

- To protect the solenoids, the hand−held tester turns off automatically 2 seconds after every solenoid has been turned on.
- When rotating the wheels fast, the fail−safe function is activated and judgement cannot be made properly.
  So rotate the wheels as slowly as possible.
  (4) When the solenoids are off, check the rear wheels by rotating them by hand.

If the rear wheels stop, replace the hydraulic brake booster.

(5) When the ”SRMF (SREC)” is off, depress the brake pedal again and check that the rear wheels do not rotate by hand.

If the rear wheels rotate, replace the hydraulic brake booster.

(j) Inspect rear ABS solenoid (SRRH) operation.

HINT:

- ON: Activate SRRH, depress the brake pedal, and then check that the right rear wheel rotates.
- OFF: Deactivate SRRH, depress the brake pedal, and then check that the right rear wheel does not rotate.
  (1) Select ”SRRH” on the hand−held tester.
  (2) Turn the ”SRRH” on by the hand−held tester, then depress the brake pedal with stable force.
  (3) When the solenoid is on, check the right rear wheel by rotating it by hand.

If the right rear wheel stops, replace the hydraulic brake booster.

NOTICE:

When operating it continuously, set the interval of more than 20 seconds.

HINT:

- To protect the solenoids, the hand−held tester turns off automatically 2 seconds after every solenoid has been turned on.
- When rotating the wheel fast, the fail−safe function is activated and judgement cannot be made properly.
  So rotate the wheel as slowly as possible.
  (4) When the solenoid is off, depress the brake pedal again and check that the right rear wheel does not rotate by hand.

If the right rear wheel rotates, replace the hydraulic brake booster.

(k) Inspect rear ABS solenoid (SRLH) operation.

HINT:

- ON: Activate SRLH, depress the brake pedal, and then check that the left rear wheel rotates.
- OFF: Deactivate SRLH, depress the brake pedal, and then check that the left rear wheel does not rotate.
  (1) Select ”SRLH” on the hand−held tester.
  (2) Turn the ”SRLH” on by the hand−held tester, then depress the brake pedal with stable force.
  (3) When the solenoids is on, check the left rear wheel by rotating it by hand.

If the left rear wheel stops, replace the hydraulic brake booster.

NOTICE:

When operating it continuously, set the interval of more than 20 seconds.

HINT:

- To protect the solenoids, the hand−held tester turns off automatically 2 seconds after every solenoid has been turned on.
- When rotating the wheel fast, the fail−safe function is activated and judgement cannot be made properly.
  So rotate the wheel as slowly as possible.
  (4) When the solenoid is off, depress the brake pedal again and check that the left rear wheel does not rotate by hand.

If the left rear wheel rotates, replace the hydraulic brake booster.

(l) Inspect rear ABS solenoid (SRRR) operation.

HINT:

- ON: Depress the brake pedal, activate SRRR and SRRH, and then check that the right rear wheel rotates.
- OFF: Deactivate SRRR and SRRH, depress the brake pedal, and then check that the right rear wheel does not rotate.
  (1) Select ”SRH & SRR” on the hand−held tester.
  (2) Depress the brake pedal with stable force, then turn the ”SRH & SRR” on simultaneously by the hand−held tester.
  (3) When the solenoids are on, check the right rear wheel by rotating it by hand.

If the right rear wheel stops, replace the hydraulic brake booster.

NOTICE:

When operating it continuously, set the interval of more than 20 seconds.

HINT:

- To protect the solenoids, the hand−held tester turns off automatically 2 seconds after every solenoid has been turned on.
- When rotating the wheel fast, the fail−safe function is activated and judgement cannot be made properly.
  So rotate the wheel as slowly as possible.
  (4) When the solenoids are off, depress the brake pedal again and check that the right rear wheel does not rotate by hand.

If the right rear wheel rotates, replace the hydraulic brake booster.

(m) Inspect rear ABS solenoid (SRLR) operation.

HINT:

- ON: Depress the brake pedal, activate SRLR and SRLH, and then check that the left rear wheel rotates.
- OFF: Deactivate SRLR and SRLH, depress the brake pedal, and then check that the left rear wheel does not rotate.
  (1) Select ”SRLR & SRLH” on the hand−held tester.
  (2) Depress the brake pedal with stable force, then turn the ”SRLR & SRLH” on simultaneously by the hand−held tester.
  (3) When the solenoids are on, check the left rear wheel by rotating it by hand.

If the left rear wheel stops, replace the hydraulic brake booster.

NOTICE:

When operating it continuously, set the interval of more than 20 seconds.

HINT:

- To protect the solenoids, the hand−held tester turns off automatically 2 seconds after every solenoid has been turned on.
- When rotating the wheel fast, the fail−safe function is activated and judgement cannot be made properly.
  So rotate the wheel as slowly as possible.
  (4) When the solenoids are off, depress the brake pedal again and check that the left rear wheel does not rotate by hand.

If the left rear wheel rotates, replace the hydraulic brake booster.

BR1YE−01

REASSEMBLY

Reassembly is in the reverse order of disassembly (See page BR−86).

NOTICE:

Apply lithium soap base glycol grease to the rubber parts indicated by the arrows (See page BR−82).

BR1YA−01

REMOVAL

NOTICE:

Before starting work, make sure that the ignition switch is OFF and depress the brake pedal more than 20 times.

HINT:

When pressure in the accumulator power supply system is released, reaction force becomes light and stroke becomes longer.

NOTICE:

- **As high pressure is applied to the brake actuator tube No. 1, do not deform it.**
- **Do not turn the ignition switch ON until work is over.**

1. DRAW OUT FLUID WITH SYRINGE

NOTICE:

Do not let brake fluid remain on a painted surface. Wash it off immediately.

2. REMOVE FRONT DOOR SCUFF PLATE, COWL SIDE TRIM BOARD, SIDE PANEL, LOWER FINISH PANEL AND NO. 2 HEATER TO REGISTER DUCT

(See page BO−111)

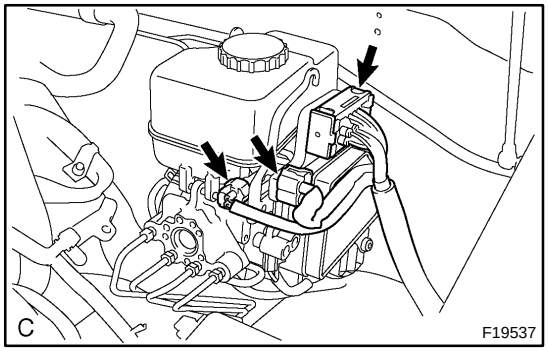

3. DISCONNECT 3 CONNECTORS

Disconnect the 2 actuator connectors and fluid level warning switch connector.

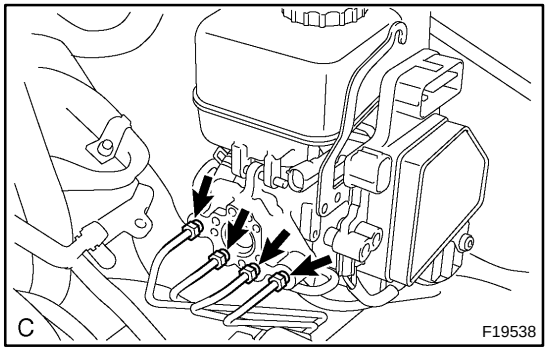

4. DISCONNECT BRAKE LINES

Using SST, disconnect the 4 brake lines.

SST 09023−00101

Torque: 15.2 N·m (155 kgf·cm, 11.2 ft·lbf)

HINT:

- When disconnecting the brake lines, use tags or make a memo to identify the place to reconnect (see page BR−82).
- At the time of installation, connect each brake line to the correct position (see page BR−82).

5. REMOVE CLIP AND CLEVIS PIN

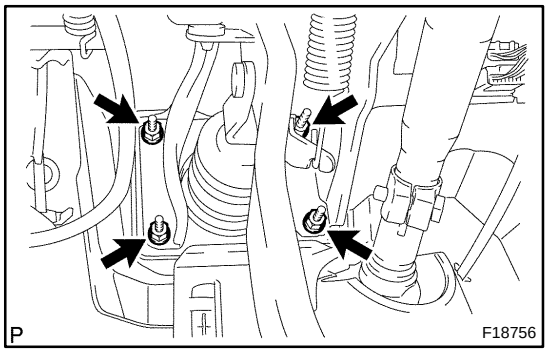

6. REMOVE HYDRAULIC BRAKE BOOSTER ASSEMBLY

(a) Remove the 4 booster installation nuts.
Torque: 14.2 N·m (145 kgf·cm, 10 ft·lbf)

(b) Remove the hydraulic brake booster assembly and gasket.

BR1WG−02

COMPONENTS

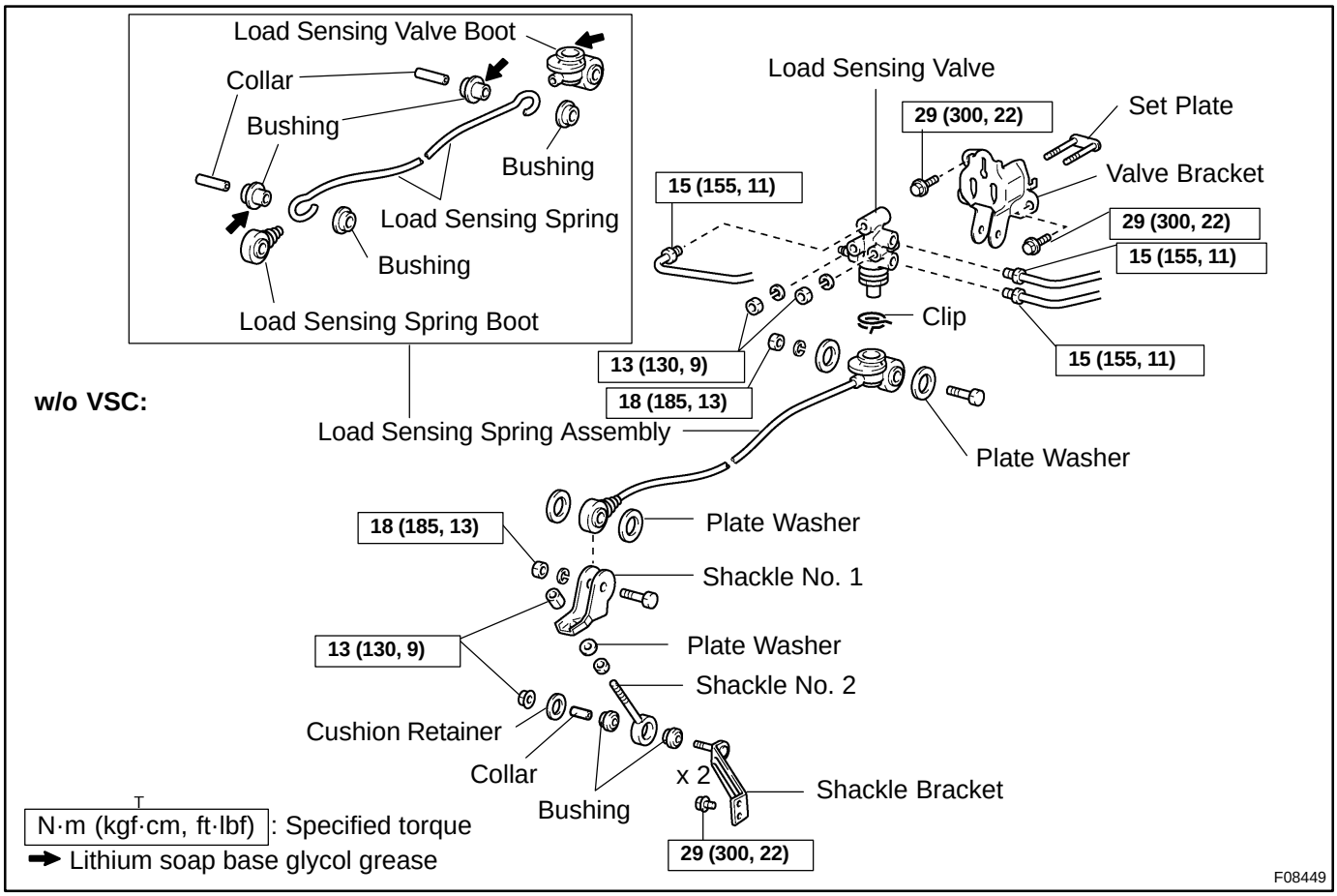

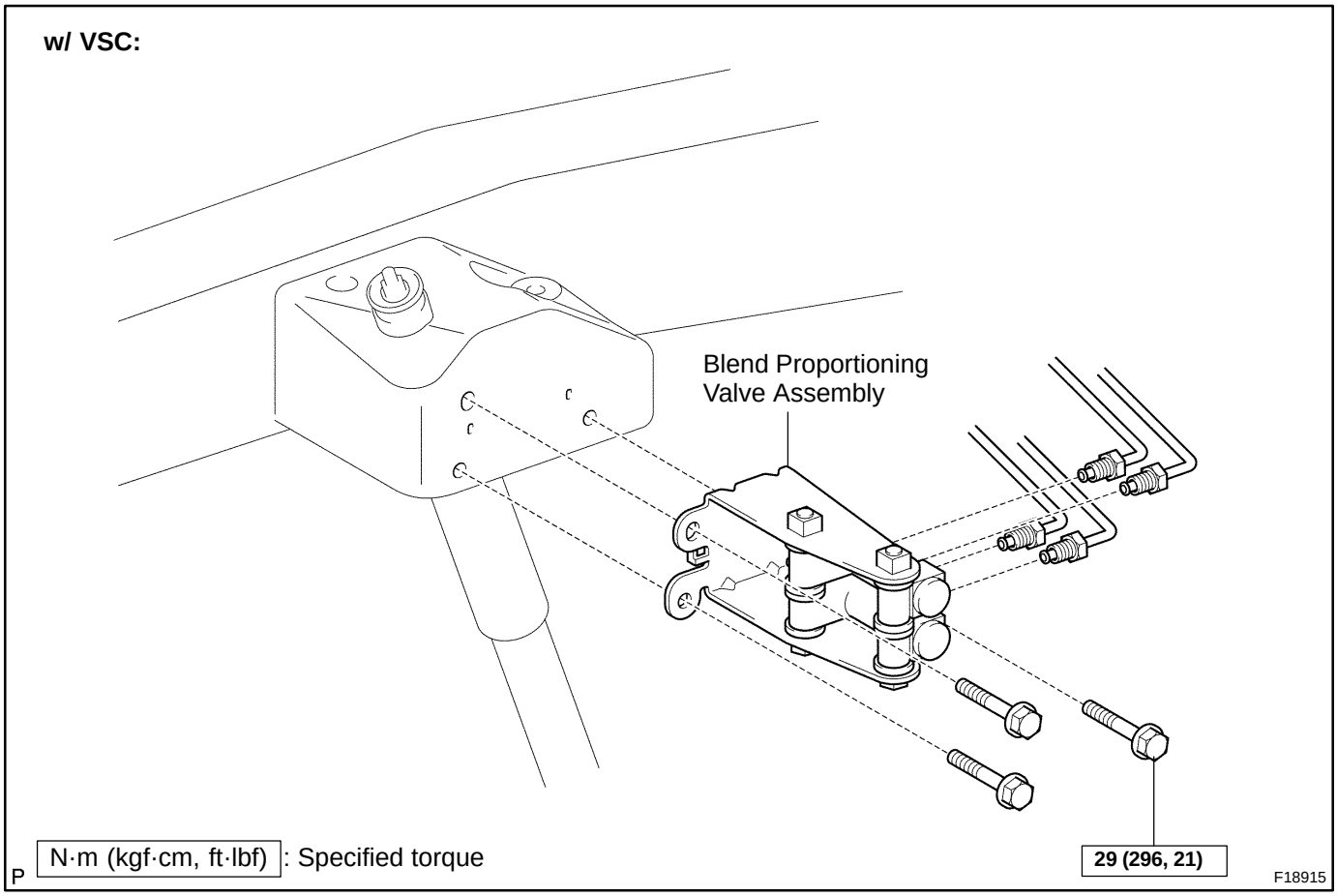

BR10S−03

DISASSEMBLY

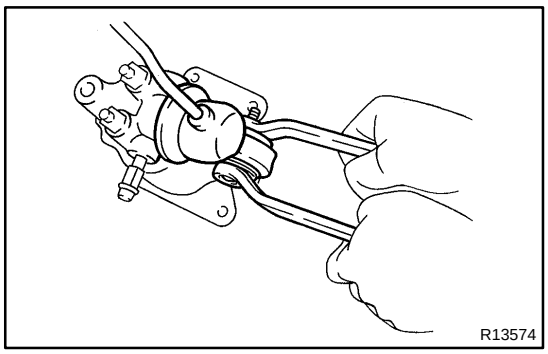

1. REMOVE VALVE BRACKET

(a) Remove the nut, washer, bolt and 2 plate washers.

(b) Remove the 2 nuts, 2 washers, set plate and valve bracket from the valve body.

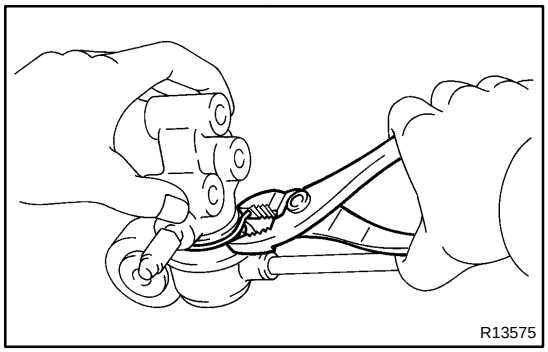

2. DISCONNECT SPRING FROM VALVE

Using pliers, remove the clip, and remove the spring from the valve.

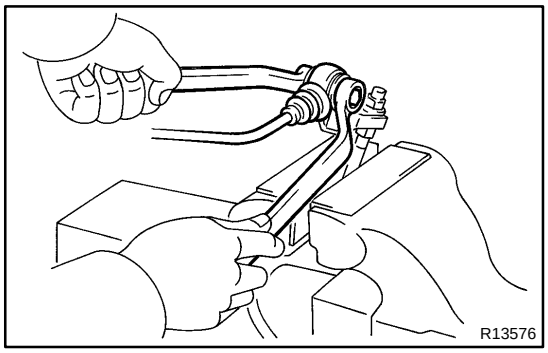

3. REMOVE SHACKLES NO. 1 AND NO. 2

(a) Remove the nut washer and bolt, and remove the load sensing spring and 2 plate washers.

(b) Loosen the 2 nuts and plate washer plate, and remove shackle No. 1 from shackle No. 2.

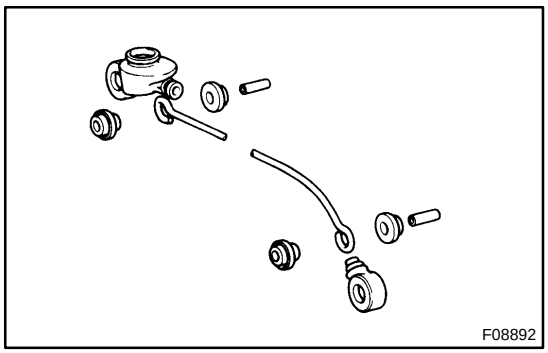

4. DISASSEMBLE LOAD SENSING SPRING

(a) Remove the 4 bushings and 2 collars.

(b) Remove the load sensing valve boot and load sensing spring boot.

BR09V–10

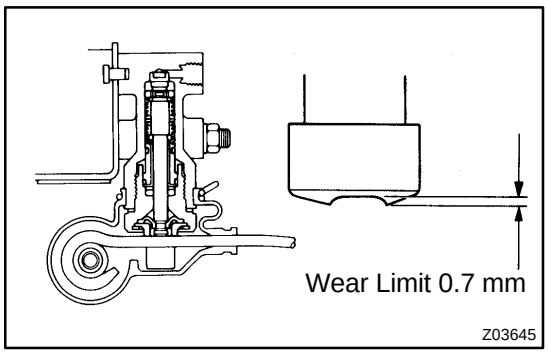

INSPECTION

INSPECT VALVE PISTON PIN AND LOAD SENSING CONTACT SURFACE FOR WEAR

Wear limit: 0.7 mm (0.028 in.)

BR09X–04

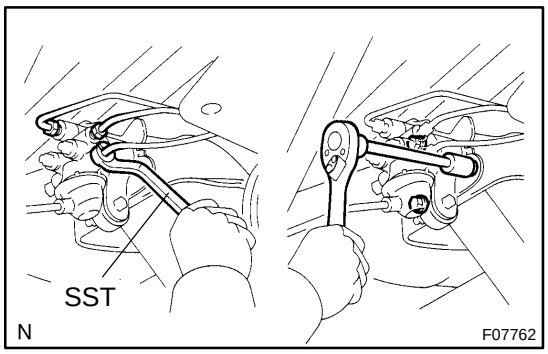

INSTALLATION

1. INSTALL LSP & BV ASSEMBLY TO FRAME

Install the LSP & BV assembly and 2 valve bracket mounting bolts.

Torque: 29 N·m (300 kgf·cm, 22 ft·lbf)

2. CONNECT BRAKE LINE

Using SST, connect the 3 brake lines.

Torque: 15 N·m (155 kgf·cm, 11 ft·lbf)

SST 09751–36011

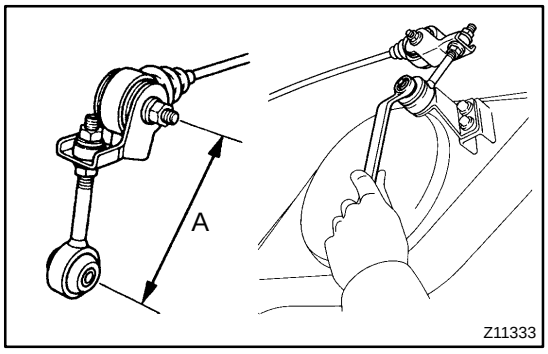

3. CONNECT SHACKLE NO. 2 BRACKET

(a) Set dimension A and torque the lock nut.

Initial set: 120 mm (4.72 in.)

Torque: 13 N·m (130 kgf·cm, 9 ft·lbf)

(b) Install the shackle bracket and 2 bolts.

Torque: 29 N·m (300 kgf·cm, 22 ft·lbf)

(c) Connect the 2 bushings, collar and shackle No. 2 to the shackle bracket.

Torque: 13 N·m (130 kgf·cm, 9 ft·lbf)

(d) Install the cushion retainer and nut.

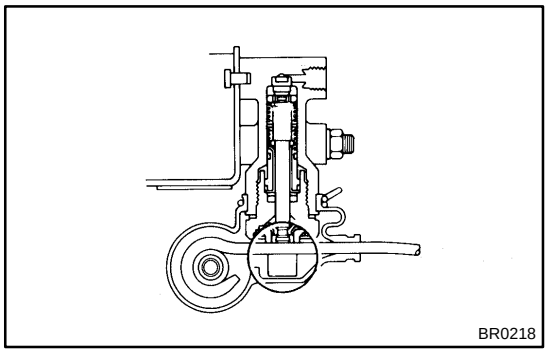

4. SET REAR AXLE LOAD (See page BR–54)

5. SET VALVE BODY

(a) When pulling down the load sensing spring, check that the valve piston moves down smoothly.

(b) Position the valve body so that the valve piston lightly contacts the load sensing spring.

(c) Tighten the 2 valve body mounting nuts.

Torque: 13 N·m (130 kgf·cm, 9 ft·lbf)

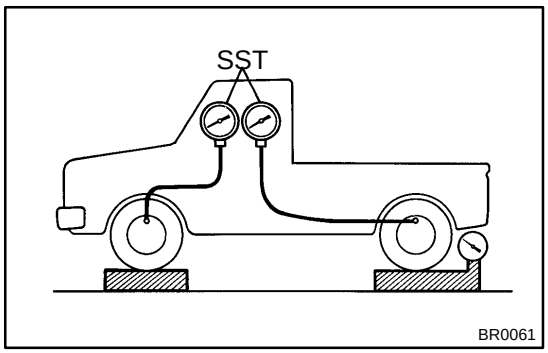

6. BLEED BRAKE LINE (See page BR–4)

7. CHECK AND ADJUST LSP & BV FLUID PRESSURE (See page BR–54)

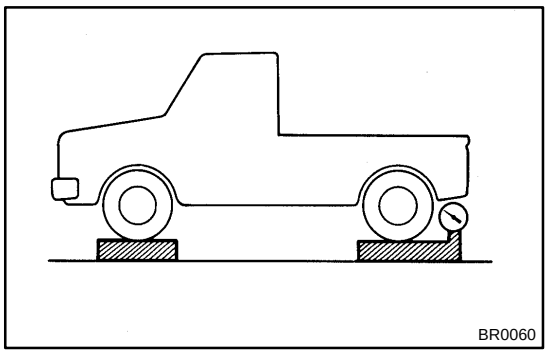

LOAD SENSING PROPORTIONING AND BY−PASS VALVE (LSP & BV)

BR09R−13

ON−VEHICLE INSPECTION

1. SET REAR AXLE LOAD

Rear axle load (includes vehicle weight):
Standard cab: 950 kg (2,094 lb)
Access cab:
1GR−FT engine: 1,000 kg (2,205 lb)
2UZ−FE engine: 1,050 kg (2,315 lb)

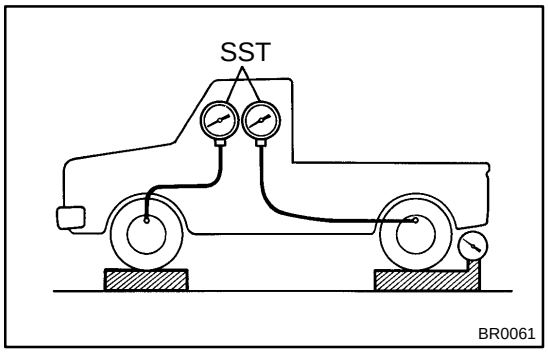

2. INSTALL LSPV GAUGE (SST) AND BLEED AIR

SST 09709−29018

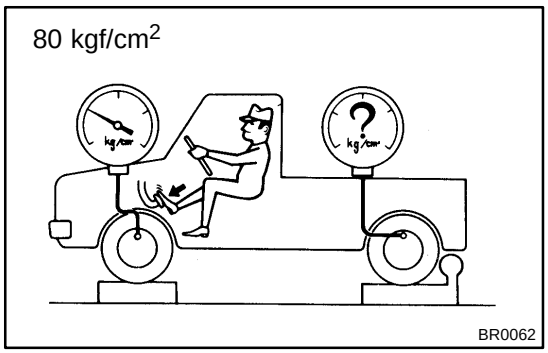

3. RAISE FRONT BRAKE PRESSURE TO 7,845 kPa (80 kgf/cm^2, 1,138 psi) AND CHECK REAR BRAKE PRESSURE

Rear brake pressure:
5,110 ± 490 kPa (52.1 ± 5 kgf/cm^2, 741 ± 71 psi)

HINT:

The brake pedal should not be depressed twice and/or returned while setting to the specified pressure. Read the value of rear brake pressure after holding the specified fluid pressure for 2 seconds. If the brake pressure is incorrect, adjust the fluid pressure.

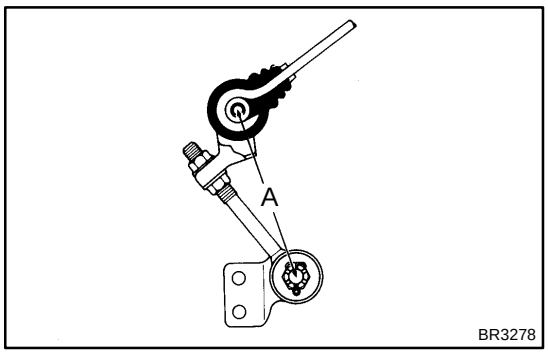

4. IF NECESSARY, ADJUST FLUID PRESSURE

(a) Loosen the lock nut.

(b) Adjust the length of shackle No. 2.

Low pressure: Lengthen A

High pressure: Shorten A

Initial set: 120 mm (4.72 in.)

Adjustment range: 112 to 128 mm (4.41 to 5.04 in.)

HINT:

One turn of the nut changes the fluid pressure as shown in the following specification.

7.4 kPa (0.76 kgf/cm^2 11 psi)

(c) Torque the lock nut.

Torque: 13 N·m (130 kgf·cm, 9 ft·lbf)

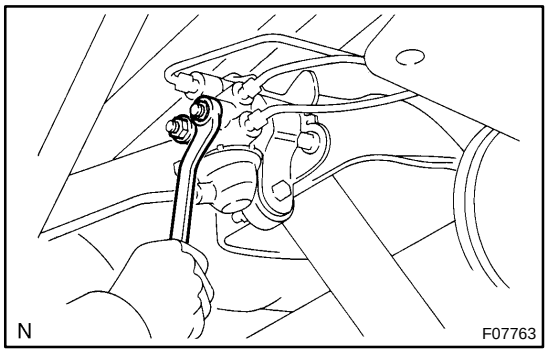

(d) If the pressure cannot be adjusted by shackle No. 2, raise or lower the valve body.

Low pressure: Lower the body

High pressure: Raise the body

(e) Torque the nuts.

Torque: 13 N·m (130 kgf·cm, 9 ft·lbf)

(f) Adjust the length of shackle No. 2 again.

If it cannot be adjusted, inspect the valve body.

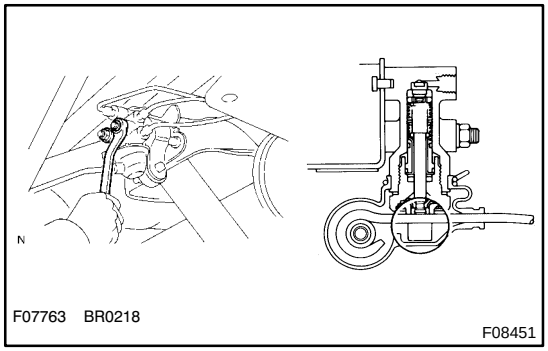

5. IF NECESSARY, CHECK VALVE BODY

(a) Assemble the valve body in the uppermost position.

HINT:

When the brakes are applied, the piston will move down about 0.8 mm (0.03 in.). In this situation, do not move the piston or make it come into contact with the load sensing spring.

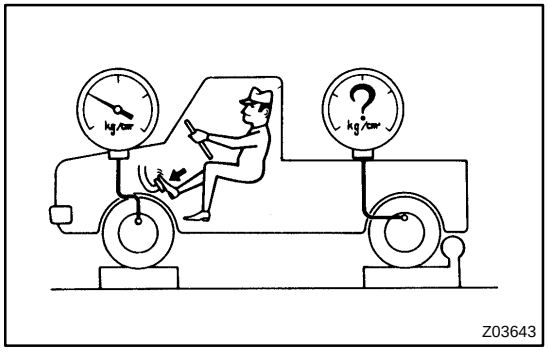

(b) In this position, check the rear brake pressure.

Front brake pressure kPa (kgf/cm^2, psi)	Rear brake pressure kPa (kgf/cm^2, psi)
1,470 (15, 213)	1,470 (15, 213)
3,922 (40, 569)	2,210 ± 390 (22.5 ± 4, 320 ± 57)
13,720 (140, 1,990)	5,150 ± 590 (52.5 ± 6, 767 ± 85)

If the measured value is not within the standard, replace the valve body.

BR10T−03

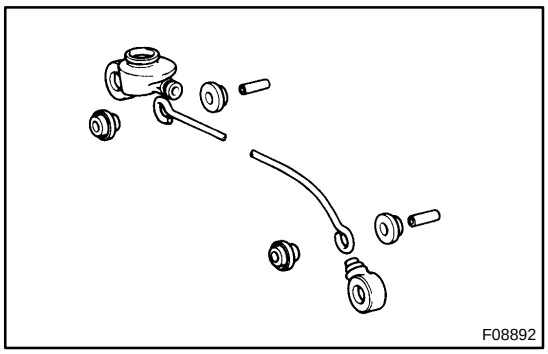

F08892

REASSEMBLY

1. ASSEMBLE LOAD SENSING SPRING

(a) Install the load sensing valve boot and load sensing spring boot.

(b) Install the 2 collars and 4 bushings.

HINT:

- Apply lithium soap−base glycol grease to all rubbing areas.

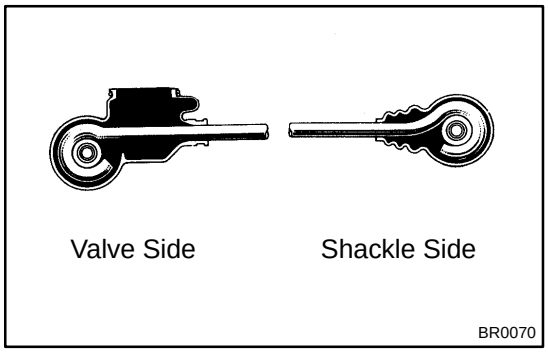

BR0070

- Do not mistake the valve side for the shackle side of the load sensing spring.

2. INSTALL SHACKLE NO. 1 AND NO. 2

Install the lock nut, plate washer and shackle No. 1 to shackle No. 2, then install the upper nut.

Torque: 13 N·m (130 kgf·cm, 9 ft·lbf)

3. INSTALL LOAD SENSING SPRING TO SHACKLE NO. 1

(a) Install the load sensing spring and 2 plate washers to shackle No. 1.

(b) Install the bolt, washer and nut.

Torque: 18 N·m (185 kgf·cm, 13 ft·lbf)

4. INSTALL LOAD SENSING SPRING TO VALVE BODY

Install the load sensing spring to the load sensing valve with the clip.

5. INSTALL VALVE BRACKET

(a) Install the set plate to the load sensing valve through the valve bracket and temporarily tighten the 2 washers and 2 nuts.

(b) Install the load sensing spring assembly, 2 plate washers, bolt, washer and nut.

Torque: 18 N·m (185 kgf·cm, 13 ft·lbf)

BR09T–04

REMOVAL

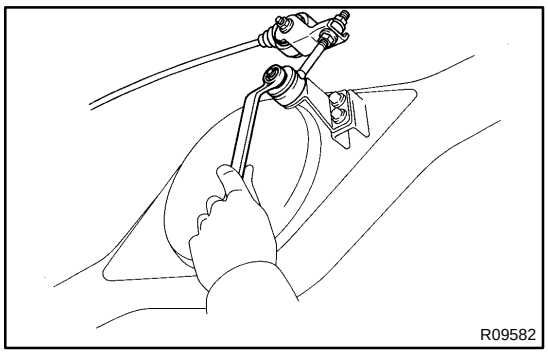

1. w/ LOAD SENSING VALVE

DISCONNECT SHACKLE NO. 2 FROM BRACKET

(a) Remove the nut and cushion retainer, and disconnect shackle No. 2.

(b) Remove the 2 bushings and collar.

(c) Remove the 2 bolts and shackle bracket.

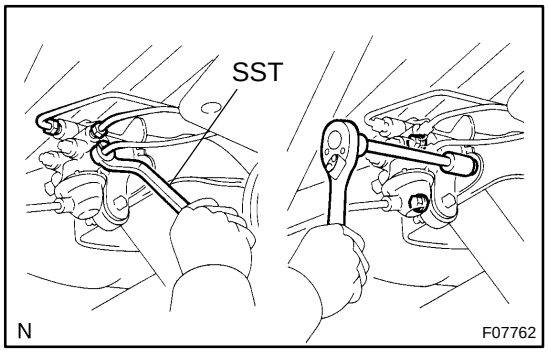

2. REMOVE LSP & BV ASSEMBLY

(a) Using SST, disconnect the 3 brake lines from the valve body.

SST 09751–36011

(b) Remove the 2 valve bracket mounting bolts and the LSP & BV assembly.

3. w/ BLEND PROPORTIONING VALVE

REMOVE BLEND PROPORTIONING VALVE ASSEMBLY

(a) Disconnect the 4 brake lines.

(b) Remove the 3 bolts and blend valve.

Torque: 29 N·m (296 kgf·cm, 21 ft·lbf)

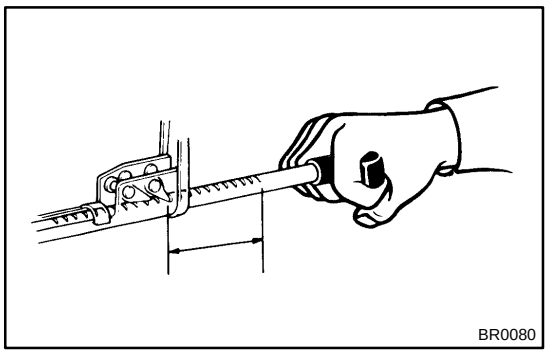

PARKING BRAKE LEVER

BR10D−02

ON−VEHICLE INSPECTION

1. CHECK PARKING BRAKE LEVER TRAVEL

Pull the parking brake lever all the way up, and count the number of clicks.

Parking brake lever travel at 196 N (20 kgf, 44 lbf): 19 to 25 clicks

If incorrect, adjust the parking brake.

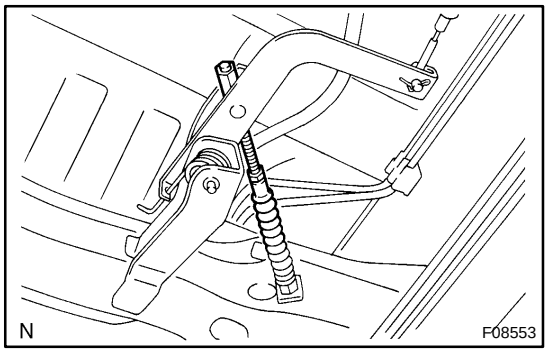

2. IF NECESSARY, ADJUST PARKING BRAKE

HINT:

Before adjusting the parking brake, make sure that the rear brake shoe clearance has been adjusted. For shoe clearance adjustment, see step 3 on page BR−52.

(a) Tighten one of the adjusting nuts of the intermediate lever while loosening the other one until the travel is correct. Tighten the 2 adjusting nuts.

(b) After adjusting the parking brake, confirm that the bell-crank stopper screw comes into contact with the backing plate (See page BR−52).

For shoe clearance adjustment, see step 3 on page BR−52.

BR10A−05

COMPONENTS

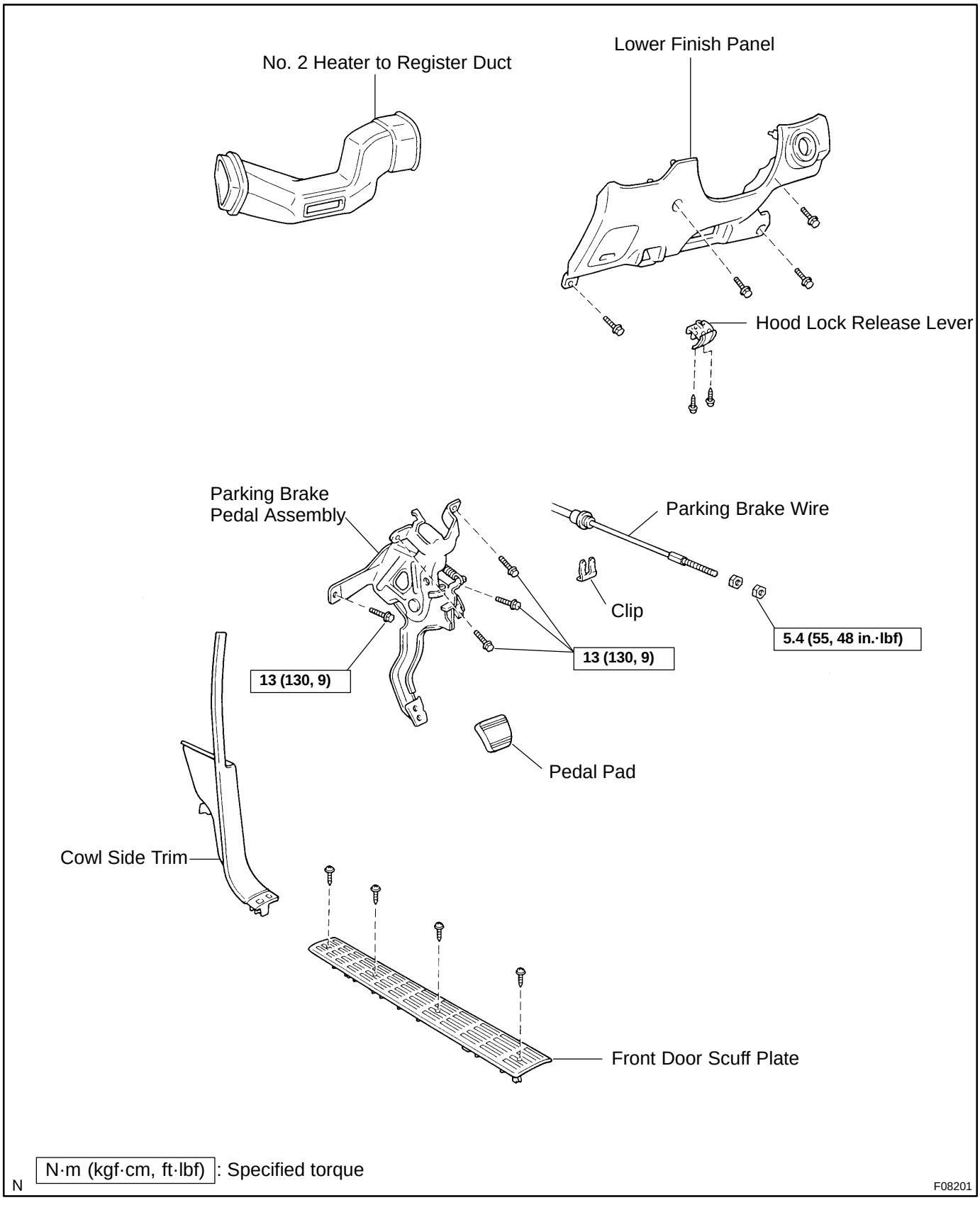

BR10C−04

INSTALLATION

Installation is in the reverse order of removal (See page BR−16).

HINT:

After installation, check and adjust the parking brake pedal travel (see page BR−14).

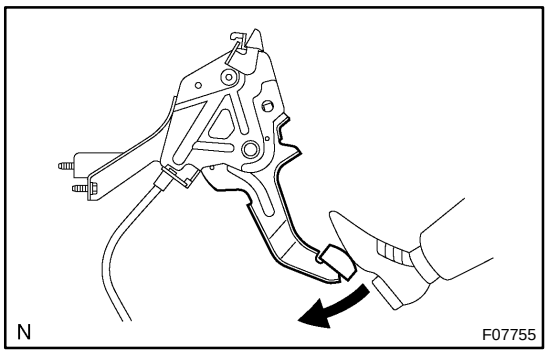

PARKING BRAKE PEDAL

BR109−05

ON−VEHICLE INSPECTION

1. CHECK PARKING BRAKE PEDAL TRAVEL

Depress the parking brake pedal all the way and count the number of clicks.

Parking brake pedal travel at 294 N (30 kgf, 66 lbf): 8 to 10 clicks

If incorrect, adjust the parking brake.

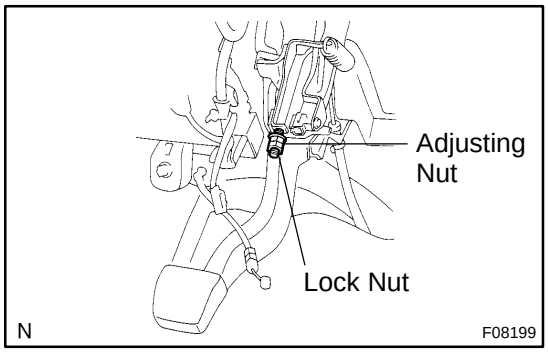

2. IF NECESSARY, ADJUST PARKING BRAKE PEDAL TRAVEL

HINT:

Before adjusting the parking brake, make sure that the rear brake shoe clearance has been adjusted. For shoe clearance adjustment, see step 3 on page BR−52.

(a) Remove the scuff plate LH.
(b) Remove the cowl side trim LH.
(c) Remove the lower finish panel.
(d) Remove the No. 2 heater to register duct.
(e) Loosen the lock nut and turn the adjusting nut until the pedal travel is correct.
(f) Tighten the lock nut.

Torque: 5.4 N·m (55 kgf·cm, 48 in.·lbf)

(g) Install the removed parts.

BR10B−05

REMOVAL

1. REMOVE SCUFF PLATE LH, COWL SIDE TRIM LH, LOWER FINISH PANEL AND NO. 2 HEATER TO REGISTER DUCT

2. REMOVE PARKING BRAKE PEDAL ASSEMBLY

(a) Disconnect the parking brake switch connector.

(b) Remove the lock nut and adjusting nut from the parking brake wire.

(c) Remove the clip and parking brake wire.

(d) Remove the 4 bolts and parking brake pedal assembly.

Torque: 13 N·m (130 kgf·cm, 9 ft·lbf)

REAR DRUM BRAKE

COMPONENTS

BR085−05

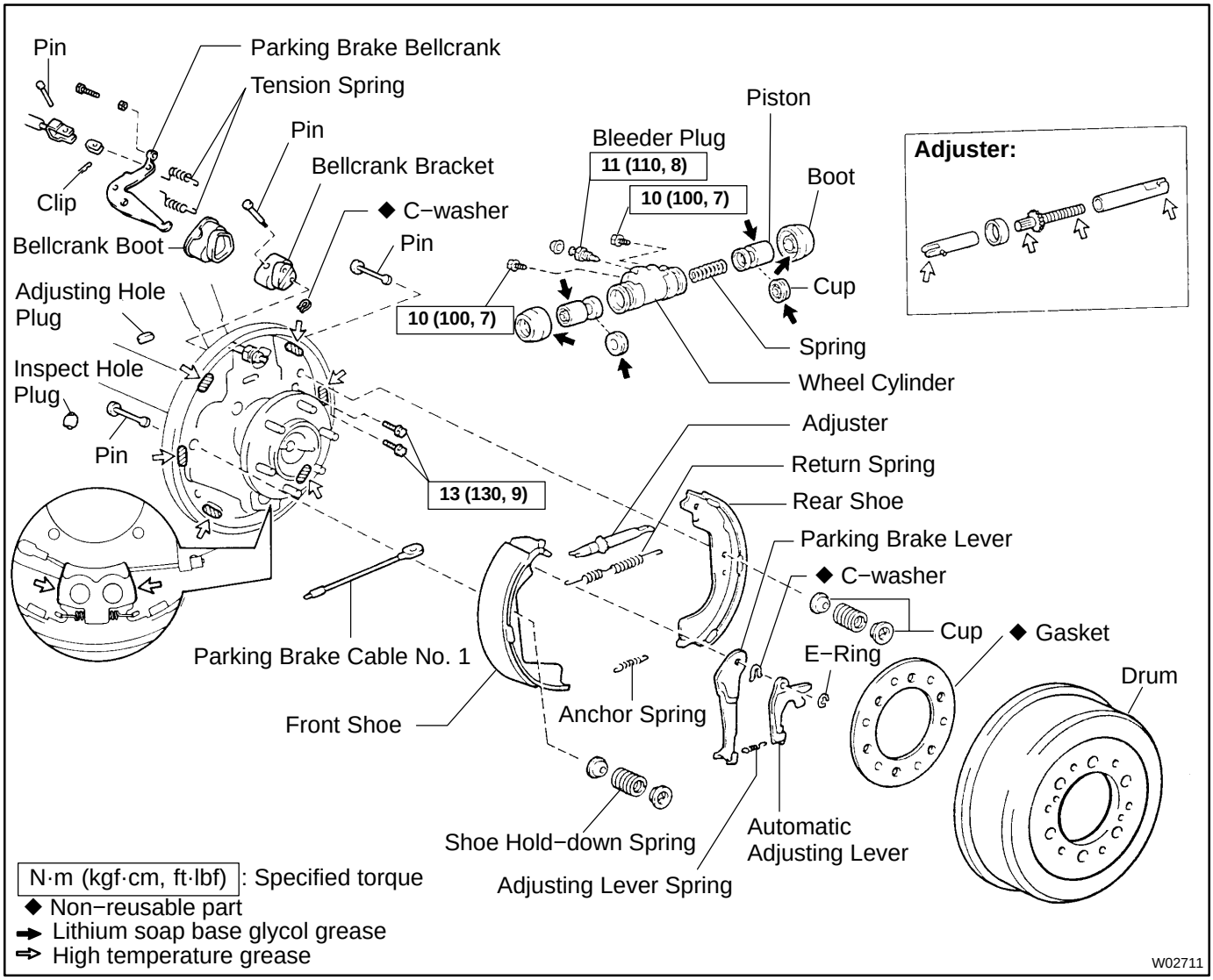

BR087–05

INSPECTION

1. INSPECT DISASSEMBLED PARTS

Inspect the disassembled parts for wear, rust or damage.

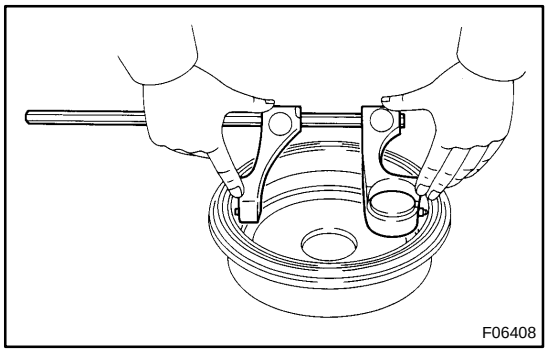

2. MEASURE BRAKE DRUM INSIDE DIAMETER

Using a brake drum gauge or equivalent, measure the inside diameter of the drum.

Standard inside diameter: 295.0 mm (11.614 in.)

Maximum inside diameter: 297.0 mm (11.693 in.)

If the drum is scored or worn, the brake drum may be lathed to the maximum inside diameter.

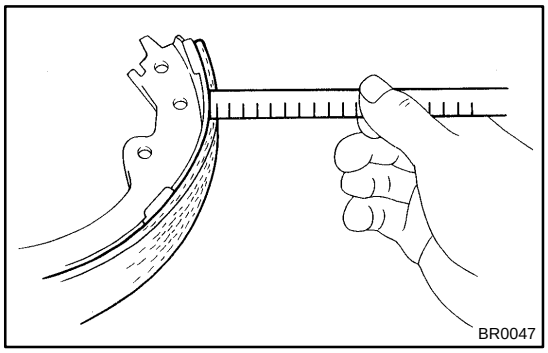

3. MEASURE BRAKE SHOE LINING THICKNESS

Using a ruler, measure the shoe lining thickness.

Standard thickness: 6.0 mm (0.236 in.)

Minimum thickness: 1.0 mm (0.039 in.)

If the shoe lining is less than the minimum, or shows signs of uneven wear, replace the brake shoes.

HINT:

If any of the brake shoes have to be replaced, replace all of the brake shoes in order to maintain even braking.

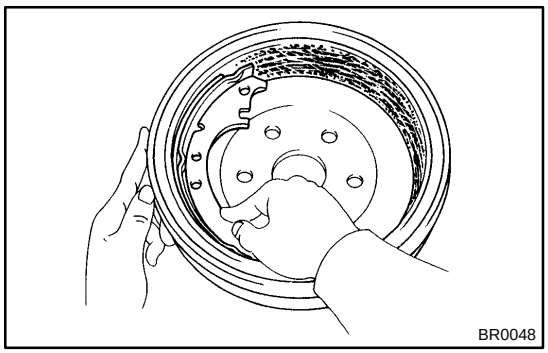

4. INSPECT BRAKE LINING AND DRUM FOR PROPER CONTACT

Apply chalk to the inside surface of the drum, then grind down the brake shoe lining to fit.

If the contact between the brake lining and drum is improper, repair the lining with a brake shoe grinder, or replace the brake shoe assembly.

BR10R−02

INSTALLATION

Installation is in the reverse order of removal (See page BR−48).

NOTICE:

Apply lithium soap base glycol grease and high temperature grease to the parts indicated by the arrows (See page BR−47).

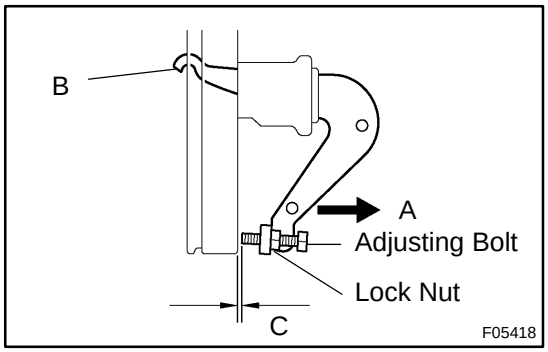

1. ADJUST BELLCRANK

(a) Lightly pull the bellcrank in direction A until there is no slack at part B.

(b) In this condition, turn the adjusting bolt so that dimension C will be 0.4 to 0.8 mm (0.016 to 0.031 in.).

(c) Lock the adjusting bolt with the lock nut.

(d) Connect the parking brake cable to the parking brake bellcrank and install the pin and clip.

(e) Install the 2 tension springs.

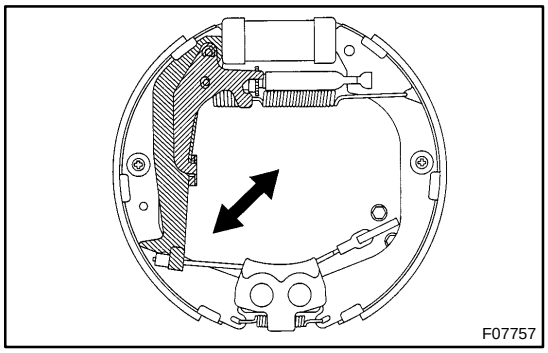

2. CHECK OPERATION OF AUTOMATIC ADJUSTING MECHANISM

(a) Move the parking brake lever of the front shoe back and forth. Check that the adjuster turns.

If the adjuster does not turn, check for incorrect installation of the rear brakes.

(b) Adjust the adjuster length as short as possible.

(c) Install the brake drum.

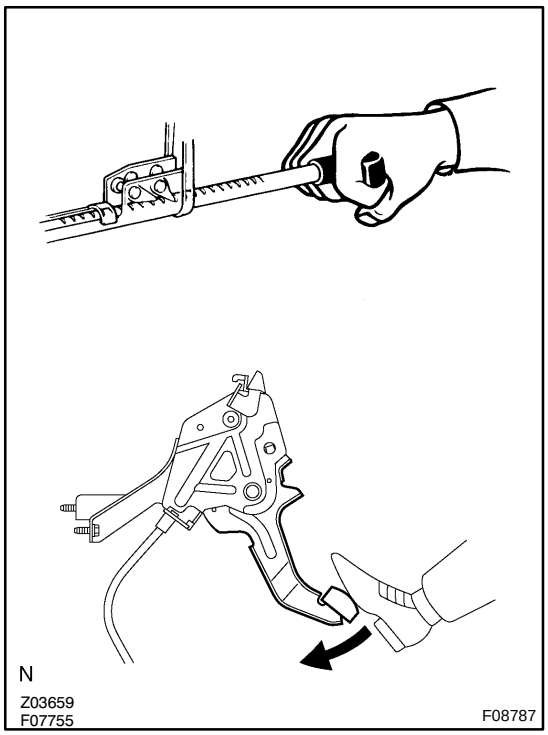

(d) Pull the parking brake lever all the way up or depress the parking brake pedal all the way until a clicking sound can no longer be heard.

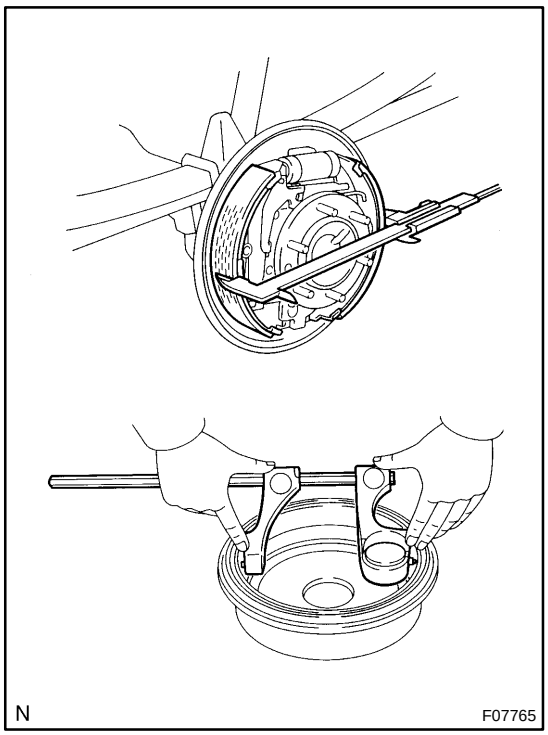

3. CHECK CLEARANCE BETWEEN BRAKE SHOES AND DRUM

(a) Remove the drum.

(b) Measure the brake drum inside diameter and diameter of the brake shoes. Check that the difference between the diameters is the correct shoe clearance.

Shoe clearance: 0.5 mm (0.020 in.)

If it is incorrect, check the parking brake system.

4. FILL BRAKE RESERVOIR WITH BRAKE FLUID

5. BLEED BRAKE SYSTEM (See page BR−4)

6. CHECK FOR LEAKS

BR086−05

REMOVAL

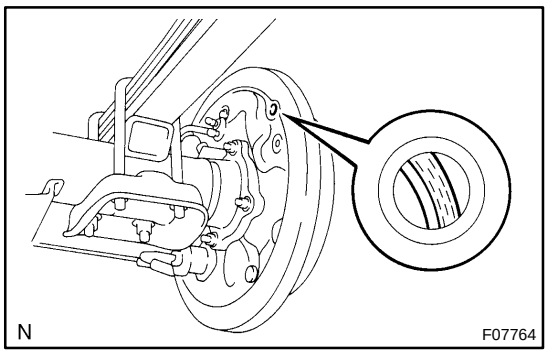

1. INSPECT SHOE LINING THICKNESS

Remove the inspection hole plug, and check the shoe lining thickness through the hole.

If less than the minimum, replace the shoes.

Minimum thickness: 1.0 mm (0.039 in.)

2. REMOVE REAR WHEEL

Torque: 113 N·m (1,150 kgf·cm, 83 ft·lbf)

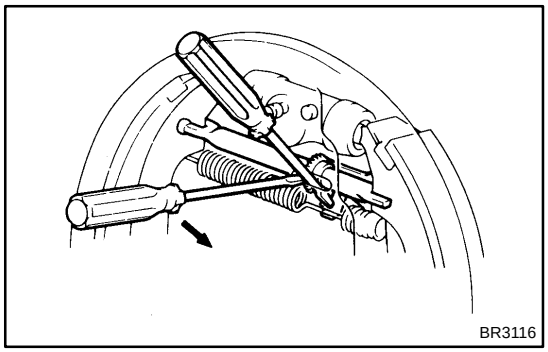

3. REMOVE BRAKE DRUM

(a) Release the parking brake lever or pedal and remove the brake drum.

HINT:

If the brake drum cannot be removed easily, do the following steps.

(b) Remove the adjusting hole plug from the backing plate.

(c) Insert a screwdriver through the hole in the backing plate, and hold the automatic adjusting lever away from the adjusting bolt.

(d) Using another screwdriver, reduce the brake shoe adjustment by turning the adjusting bolt.

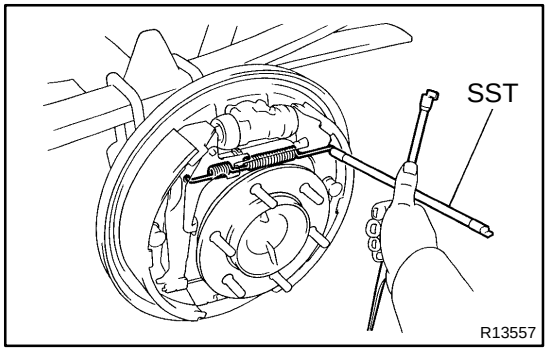

4. REMOVE REAR SHOE

(a) Using SST, disconnect the return spring from the rear shoe.

SST 09703−30010

(b) Remove the return spring from the front shoe.

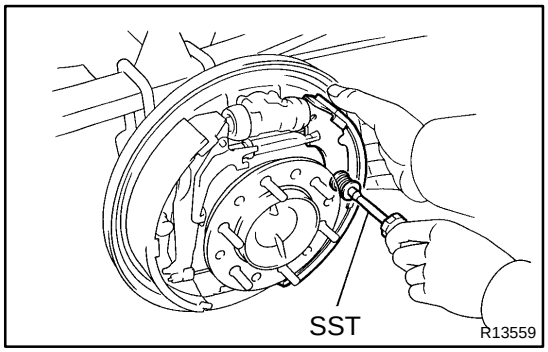

(c) Using SST, remove the shoe hold−down spring, 2 cups and pin.

SST 09718−00010

(d) Disconnect the anchor spring from the rear shoe and remove the rear shoe.

(e) Remove the anchor spring from the front shoe.

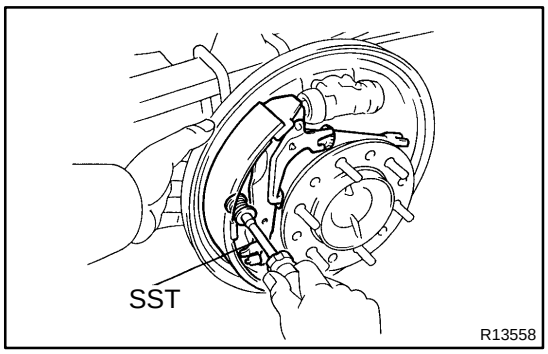

5. REMOVE FRONT SHOE

(a) Using SST, remove the shoe hold−down spring, 2 cups and pin.
SST 09718−00010

(b) Disconnect the parking brake cable No. 1 from the parking brake bellcrank.

(c) Remove the front shoe with adjuster.

(d) Disconnect the parking brake cable No. 1 from the front shoe.

6. REMOVE ADJUSTER FROM FRONT SHOE

(a) Remove the adjusting lever spring.

(b) Remove the adjuster.

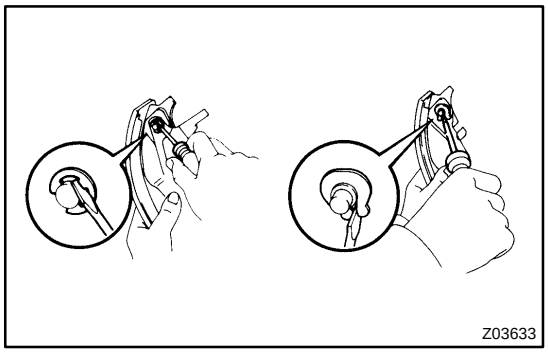

7. REMOVE AUTOMATIC ADJUSTING LEVER AND PARKING BRAKE LEVER

(a) Remove the E−ring.

(b) Remove the automatic adjusting lever.

(c) Remove the C−washer.

(d) Remove the parking brake lever.

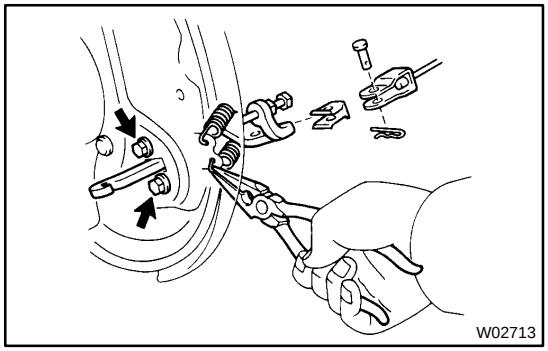

8. REMOVE AND DISASSEMBLE PARKING BRAKE BELLCRANK

(a) Remove the clip and pin and disconnect the parking brake cable.

(b) Remove the 2 tension springs.

(c) Remove the 2 bolts and bellcrank.
Torque: 13 N·m (130 kgf·cm, 9 ft·lbf)

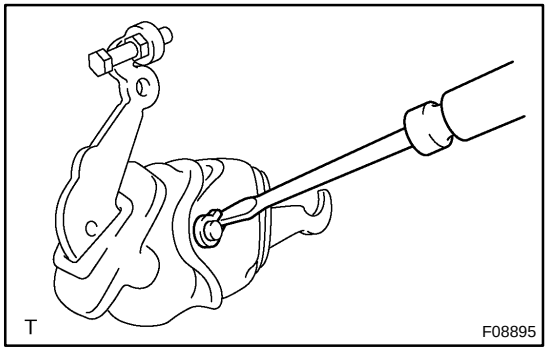

(d) Turn over the bellcrank boot and remove the C−washer and pin.

(e) Remove the bellcrank bracket and bellcrank boot from the parking brake bellcrank.

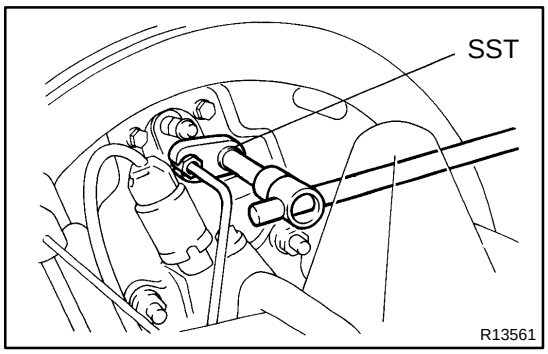

9. REMOVE WHEEL CYLINDER

(a) Using SST, disconnect the brake line. Use a container to catch brake fluid.
SST 09023−00101
Torque: 15 N·m (155 kgf·cm, 11 ft·lbf)

(b) Remove the 2 bolts and the wheel cylinder.
Torque: 10 N·m (100 kgf·cm, 7 ft·lbf)

10. DISASSEMBLE WHEEL CYLINDER

(a) Remove the 2 boots, 2 pistons and spring.

(b) Remove the 2 piston cups from each piston.

REAR SPEED SENSOR

COMPONENTS

BR0A5−06

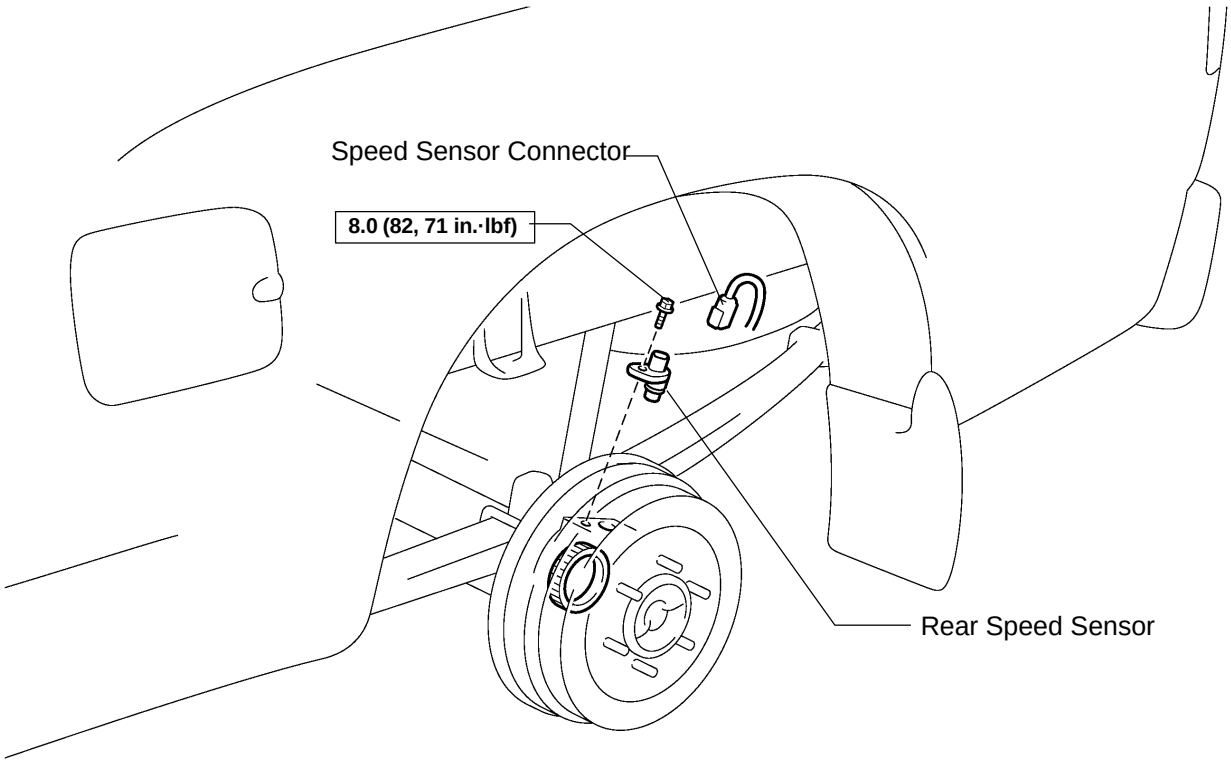

N·m (kgf·cm, ft·lbf) : Specified torque

F19542

BR0A7−08

INSTALLATION

Installation is in the reverse order of removal (See page BR−101).

HINT:

After installation, check the speed sensor signal
(See page DI−1387 or DI−1478).

BR0A6−05

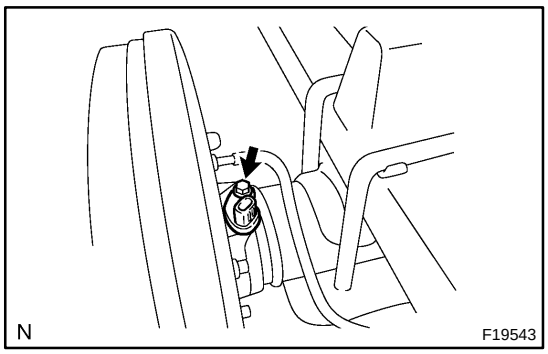

REMOVAL

1. REMOVE REAR WHEEL
Torque: 113 N·m (1.150 kgf·cm, 83 ft·lbf)

2. DISCONNECT SPEED SENSOR CONNECTOR

3. REMOVE SPEED SENSOR

(a) Remove the bolt and speed sensor from the axle carrier.
Torque: 8.0 N·m (82 kgf·cm, 71 ft·lbf)

BR1X6−02

INSTALLATION

Installation is in the reverse order of removal (See page BR−97).

STEERING ANGLE SENSOR

BR1YG−01

REMOVAL

1. REMOVE STEERING WHEEL PAD

NOTICE:

If the airbag connector is disconnected with the ignition switch in ACC or ON, DTCs will be recorded.

(a) Disconnect battery negative terminal.

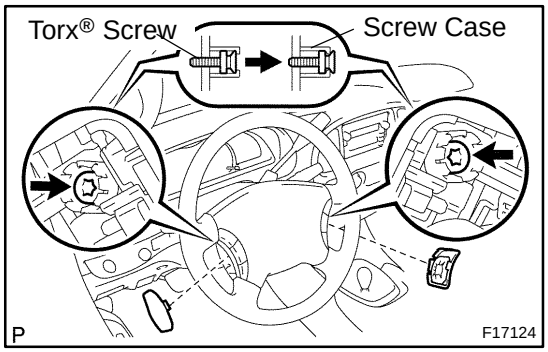

(b) Place the front wheels facing straight ahead.
(c) Remove the steering wheel lower No. 3 cover.
(d) Remove the steering wheel lower No. 2 cover.
(e) Using a torx® socket wrench (T30), loosen the 2 torx® screws.

HINT:

Loosen the screw until the groove along the screw circumference catches on the screw case.

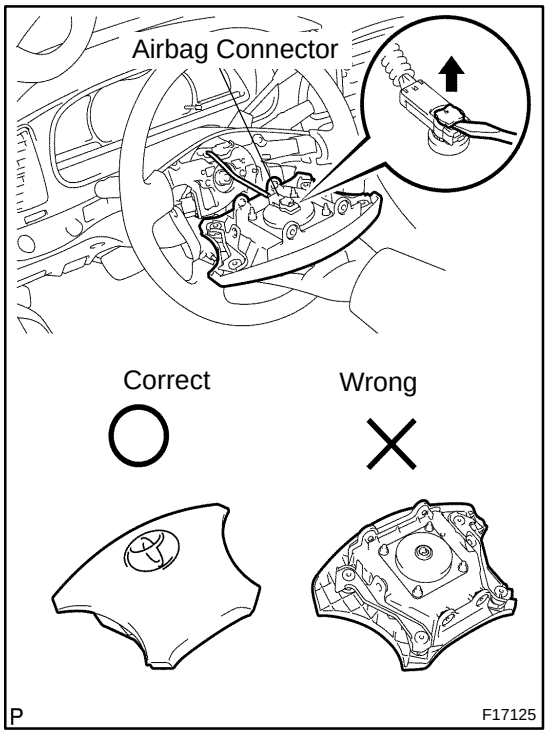

(f) Pull out the wheel pad from the steering wheel.
(g) Using a screwdriver, disconnect the airbag connector.

CAUTION:

- **When storing the steering wheel pad, keep the upper surface of the pad facing upward.**
- **Never disassemble the steering wheel pad.**

NOTICE:

When removing the steering wheel pad, take care not to pull the airbag wire harness.

(h) Disconnect the horn connector and remove the steering wheel pad.

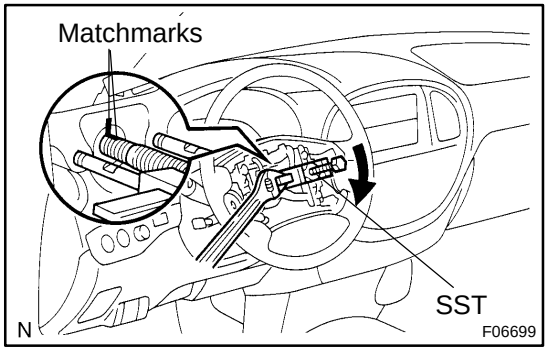

2. REMOVE STEERING WHEEL

(a) Remove the steering wheel set nut.
(b) Place matchmarks on the steering wheel and main shaft assembly.
(c) Using SST, remove the wheel.

SST 09950−50013 (09951−05010, 09952−05010, 09953−05020, 09954−05021)

3. REMOVE SPIRAL CABLE

(a) Disconnect the 2 connectors.
(b) Remove the 4 screws and remove the spiral cable.

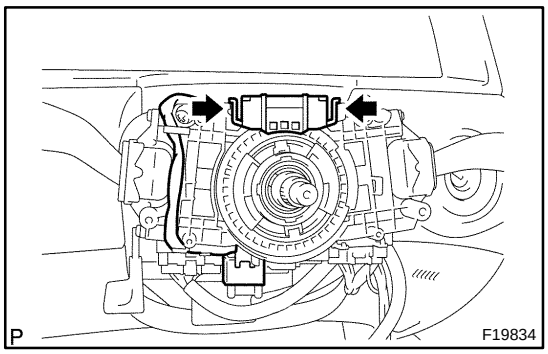

4. REMOVE STEERING ANGLE SENSOR

(a) Disconnect the connector.

(b) While pressing the 2 claws, remove the steering sensor.

TROUBLESHOOTING

PROBLEM SYMPTOMS TABLE

BR08P−08

Use the table below to help you find the cause of the problem. The numbers indicate the priority of the likely cause of the problem. Check each part in order. If necessary, replace these parts.

Symptom	Suspected Area	See page
Low pedal or spongy pedal	1. Fluid leak in brake system	DI−1455
	2. Air in brake system	BR−4
	3. Piston seals (Worn or damaged)	BR−41
	4. Rear brake shoe clearance (Out of adjustment)	BR−51
	5. Master cylinder (Faulty)	BR−22 BR−28
	6. Booster push rod (Out of adjustment)	BR−34 BR−38
Brake drag	1. Brake pedal freeplay (Minimum)	BR−10
	2. Parking brake lever travel (Out of adjustment)	BR−18
	3. Parking brake pedal travel (Out of adjustment)	BR−14
	4. Parking brake wire (Sticking)	
	5. Rear brake shoe clearance (Out of adjustment)	BR−52
	6. Pad or lining (Cracked or distorted)	BR−39 BR−47
	7. Piston (Stuck)	BR−41
	8. Piston (Frozen)	BR−41
	9. Anchor or return spring (Faulty)	BR−47
	10. Booster push rod (Out of adjustment)	BR−34 BR−38
	11. Vacuum leak in booster system	BR−31 BR−35
	12. Master cylinder (Faulty)	BR−22 BR−28
Brake pull	1. Piston (Stuck)	BR−41
	2. Pad or lining (Oily)	BR−39 BR−47
	3. Piston (Frozen)	BR−41
	4. Disc (Scored)	BR−44
	5. Pad or lining (Cracked or distorted)	BR−39 BR−47

Hard pedal but brake inefficient	1. Fluid leak in brake system	DI−1455
	2. Air in brake system	BR−4
	3. Pad or lining (Worn)	BR−39 BR−47
	4. Pad or lining (Cracked or distorted)	BR−39 BR−47
	5. Rear brake shoe clearance (Out of adjustment)	BR−52
	6. Pad or lining (Oily)	BR−39 BR−47
	7. Pad or lining (Glazed)	BR−39 BR−47
	8. Disc (Scored)	BR−44
	9. Booster push rod (Out of adjustment)	BR−34 BR−38
	10.Vacuum leak in booster system	BR−31 BR−35
Noise from brakes	1. Pad or lining (Cracked or distorted)	BR−39 BR−47
	2. Installation bolt (Loose)	BR−41
	3. Disc (Scored)	BR−44
	4. Pad or lining (Dirty)	BR−39 BR−47
	5. Pad or lining (Glazed)	BR−39 BR−47
	6. Anchor or return spring (Faulty)	BR−47
	7. Anti−squeal shim (Damaged)	BR−39
	8. Shoe hold−down spring (Damaged)	BR−47

BR1WS−02

INSTALLATION

- **Installation is in the reverse order of removal (See page BR−105).**
- **Perform the yaw rate sensor zero point calibration (See page DI−1474).**

YAW RATE SENSOR

BR1WR−02

REMOVAL

1. Passenger side:
REMOVE FRONT SEAT (See page BO−141, BO−155, BO−166, BO−177 or BO−188)

2. REMOVE YAW RATE SENSOR

(a) Disconnect the connector.

(b) Remove the 2 nuts and sensor.
Torque: 12.5 N·m (128 kgf·cm, 9 ft·lbf)

CHARGING SYSTEM

CH0N5−01

ON−VEHICLE INSPECTION

CAUTION:

- **Check that the battery cables are connected to the correct terminals.**
- **Disconnect the battery cables when the battery is given a quick charge.**
- **Do not perform tests with a high voltage insulation resistance tester.**
- **Never disconnect the battery while the engine is running.**

1. CHECK BATTERY ELECTROLYTE LEVEL

(a) Check the electrolyte quantity of each cell (Maintenance−Free Battery).

If under the lower level, replace the battery (or add distilled water if possible) and check the charging system.

(b) Check the electrolyte quantity of each cell (Except Maintenance−Free Battery).

If under the lower level, add distilled water.

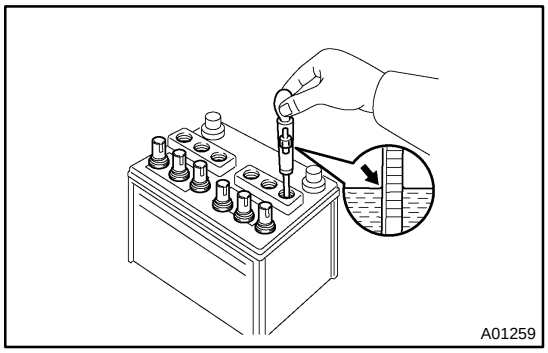

2. CHECK BATTERY SPECIFIC GRAVITY (Except Maintenance−Free Battery)

(a) Check the specific gravity of each cell.

Standard specific gravity: 1.25 to 1.29 at 20°C (68°F)

HINT:

If the specific gravity is less than specification, charge the battery.

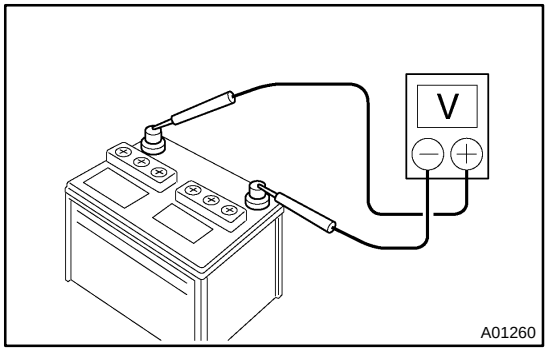

3. CHECK BATTERY VOLTAGE

(a) After having driven the vehicle and in the case that 20 minutes have not passed after having stopped the engine, turn the ignition switch ON and turn on the electrical system (headlight, blower motor, rear defogger etc.) for 60 seconds to remove the surface charge.

(b) Turn the ignition switch OFF and turn off the electrical systems.

(c) Measure the battery voltage between the negative (−) and positive (+) terminals of the battery.

Standard voltage: 12.5 to 12.9 V at 20°C (68°F)

HINT:

If the voltage is less than specification, charge the battery.

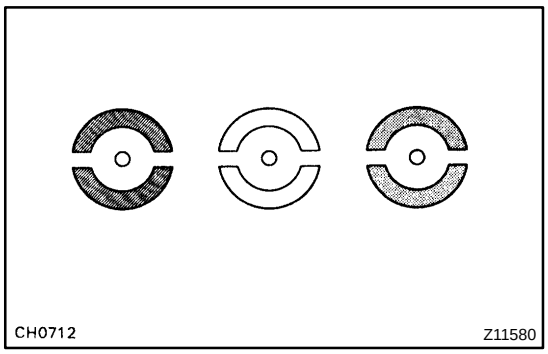

(d) Check the indicator as shown in the illustration.

HINT:

- Blue: OK
- White: Charging Necessary
- Red: Insufficient Water

4. CHECK BATTERY TERMINALS, FUSIBLE LINK AND FUSES

(a) Check that the battery terminals are not loose or corroded.

(b) Check the fusible link, H−fuses and fuses for continuity.

5. INSPECT DRIVE BELT

(a) Visually check the belt for excessive wear, frayed cords etc.

HINT:

- If any defect has been found, replace the drive belt.
- Cracks on the rib side of a belt are considered acceptable. If the belt has chunks missing from the ribs, it should be replaced.

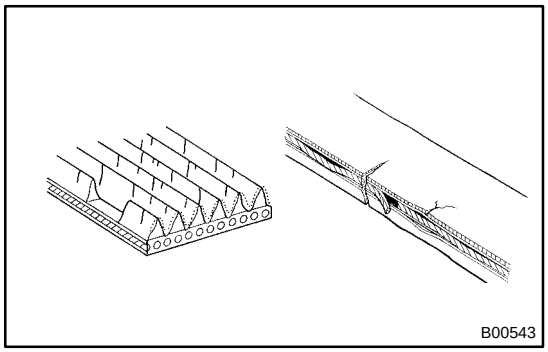

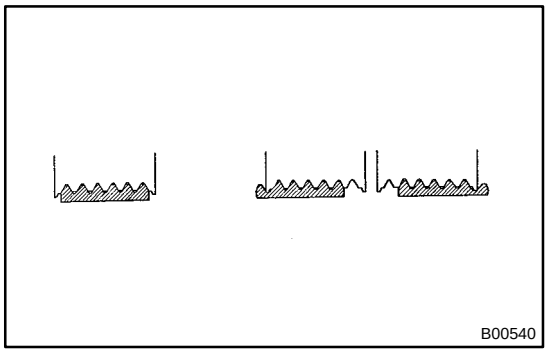

(b) Check that it fits properly in the ribbed grooves.

HINT:

Check with your hand to confirm that the belt has not slipped out of the groove on the bottom of the pulley.

6. VISUALLY CHECK GENERATOR WIRING

(a) Check that the wiring is in good condition.

7. LISTEN FOR ABNORMAL NOISES FROM GENERATOR

(a) Check that there is no abnormal noise from the generator while the engine is running.

8. INSPECT CHARGE WARNING LIGHT CIRCUIT

(a) Turn the ignition switch ON. Check that the charge warning light comes on.

(b) Start the engine. Check that the light goes off.

HINT:

If the light does not operate as specified, troubleshoot the charge warning light circuit.

9. INSPECT CHARGING CIRCUIT WITHOUT LOAD

(a) If a battery/generator tester is available, connect the tester to the charging circuit as per manufacturer's instructions.

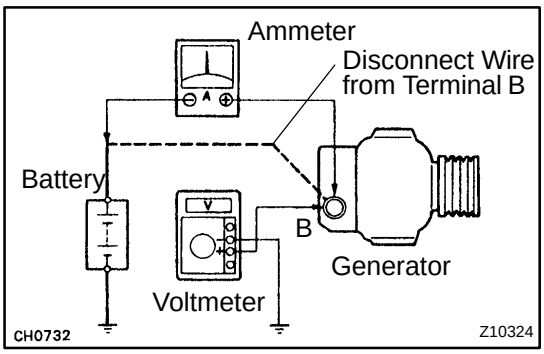

(b) If a tester is not available, connect a voltmeter to the charging circuit as follows.
  (1) Disconnect to the wire from terminal B of the generator and connect it to the negative (−) lead of the ammeter.
  (2) Connect the positive (+) lead of the ammeter to terminal B of the generator.
  (3) Connect the positive (+) lead of the voltmeter to terminal B of the generator.
  (4) Ground the negative (−) lead of the voltmeter.

(c) Check the charging circuit.
  (1) With the engine running from idle to 2,000 rpm, check the reading on the ammeter and voltmeter.

  Standard amperage: 10 A or less

  Standard voltage: 13.2 to 14.8 V

HINT:

- If the voltmeter reading is more than standard voltage, replace the voltage regulator.
- If the voltmeter reading is less than the standard voltage, check the voltage regulator and generator as follows:

10. INSPECT CHARGING CIRCUIT WITH LOAD

(a) With the engine running at 2,000 rpm, turn on the high beam headlights and place the heater blower switch at ”HI”.

(b) Check the reading on the ammeter.

  Standard amperage: 30 A or more

HINT:

- If the ammeter reading is less than standard amperage, repair the generator.
- If the battery is fully charged, the indication will sometimes be less than standard amperage.

GENERATOR

COMPONENTS

CH0N6−01

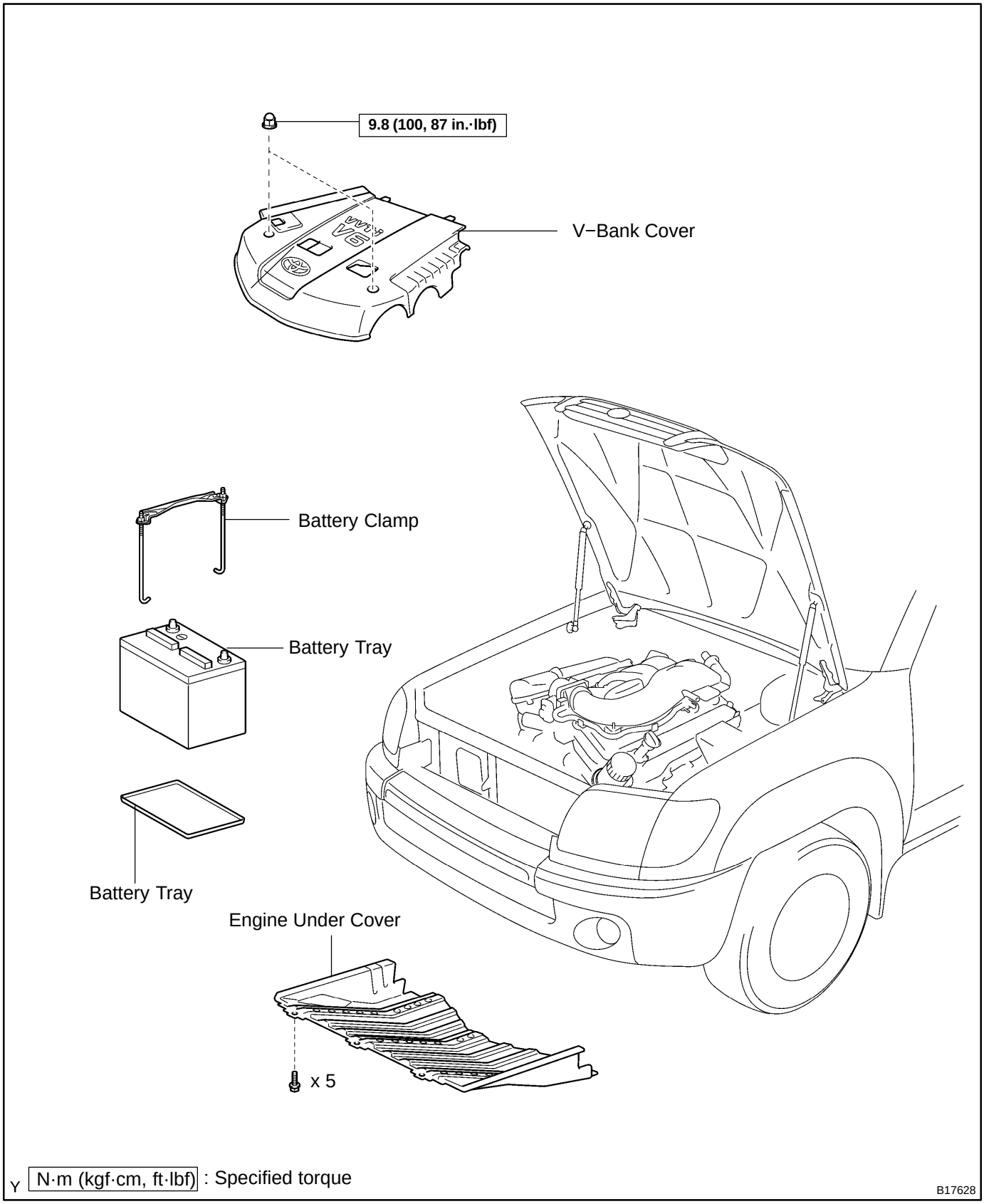

Y N·m (kgf·cm, ft·lbf) : Specified torque

B17628

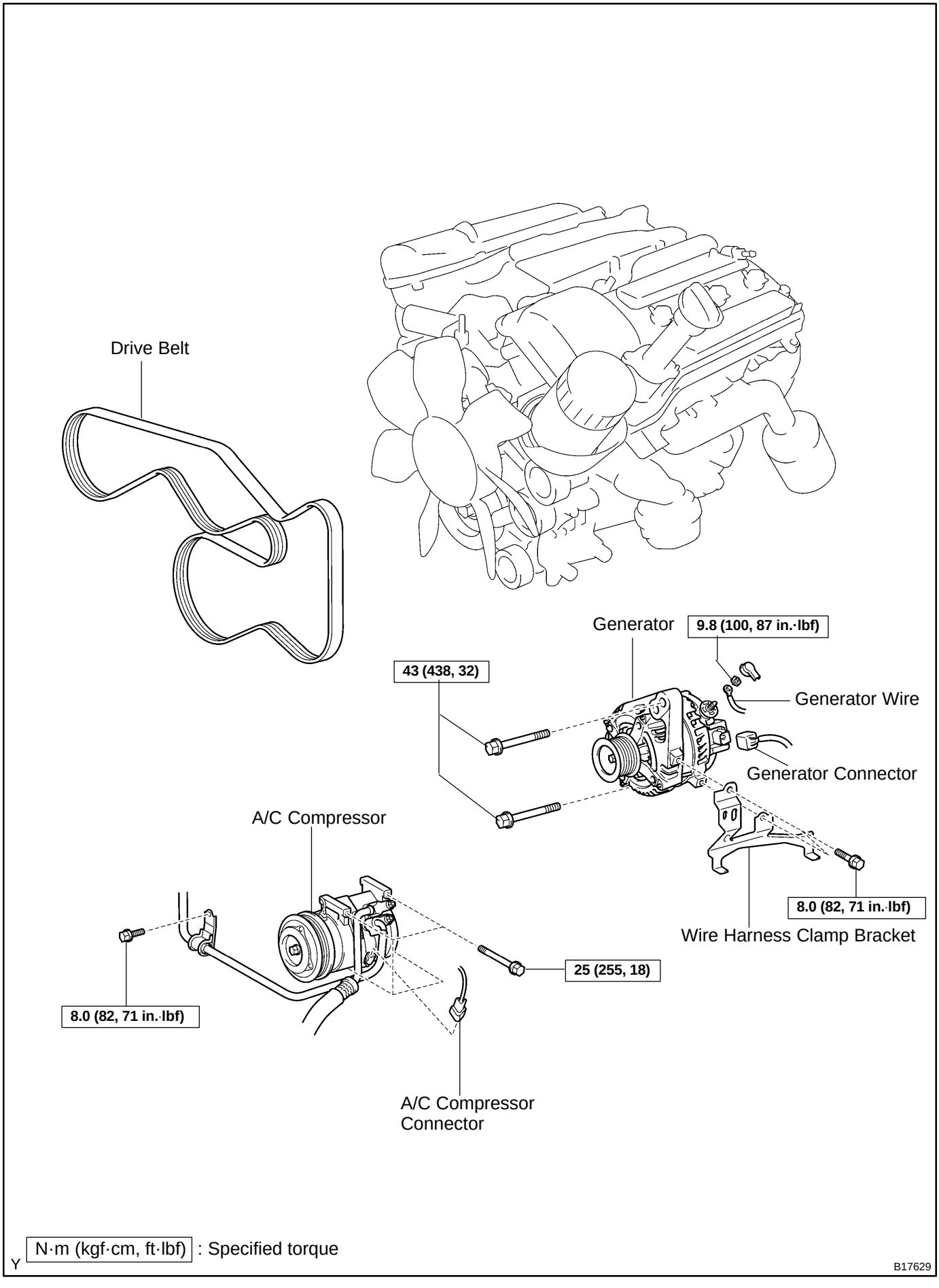
Drive Belt
Generator
9.8 (100, 87 in.·lbf)
43 (438, 32)
Generator Wire
Generator Connector
A/C Compressor
8.0 (82, 71 in.·lbf)
Wire Harness Clamp Bracket
25 (255, 18)
8.0 (82, 71 in.·lbf)
A/C Compressor Connector
Y
N·m (kgf·cm, ft·lbf) : Specified torque
B17629

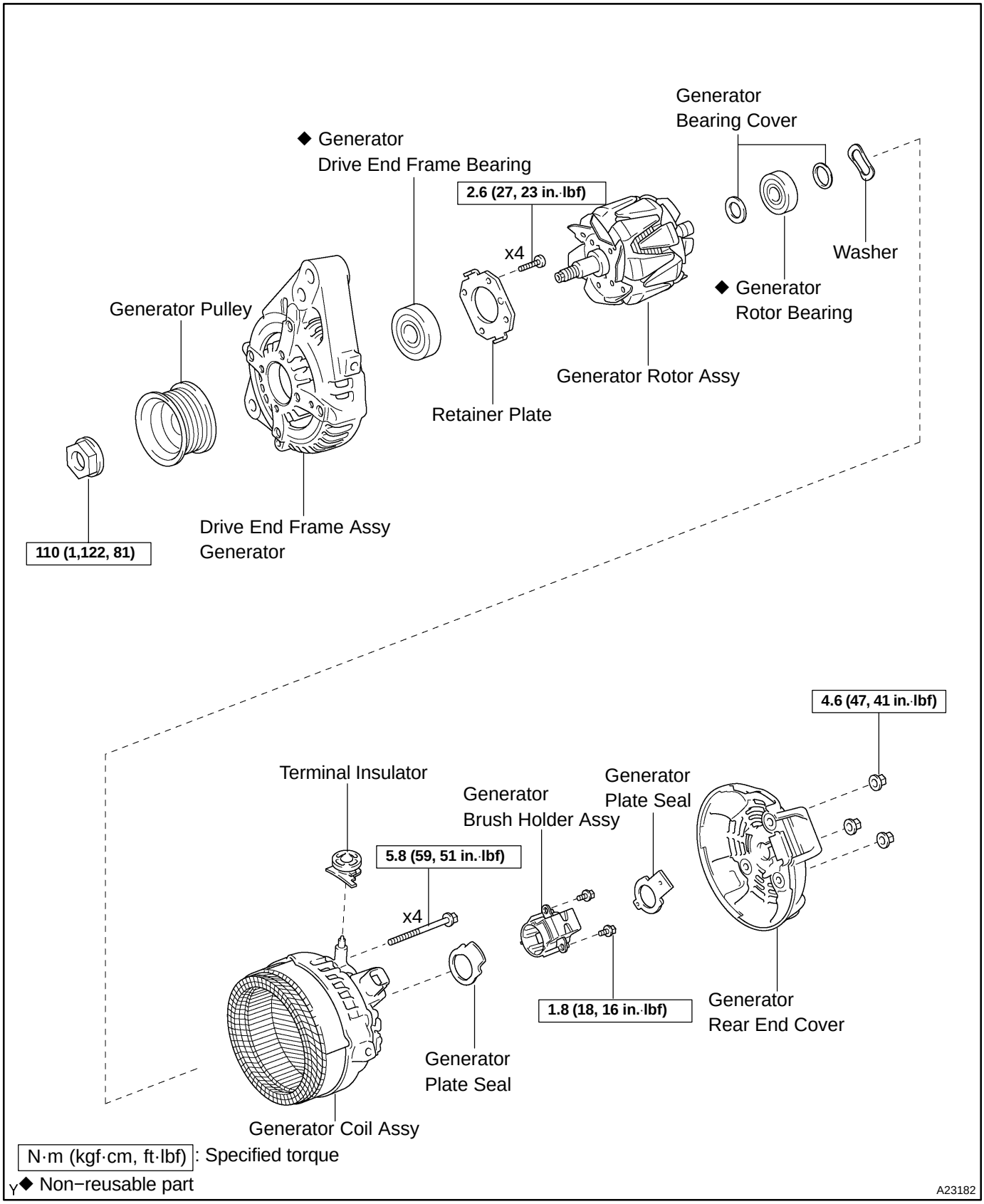
Generator
Bearing Cover
◆ Generator
Drive End Frame Bearing
2.6 (27, 23 in.·lbf)
x4
Washer
◆ Generator
Rotor Bearing
Generator Pulley
Generator Rotor Assy
Retainer Plate
110 (1,122, 81)
Drive End Frame Assy
Generator
4.6 (47, 41 in.·lbf)
Terminal Insulator
Generator
Brush Holder Assy
Generator
Plate Seal
5.8 (59, 51 in.·lbf)
x4
1.8 (18, 16 in.·lbf)
Generator
Rear End Cover
Generator
Plate Seal
Generator Coil Assy
N·m (kgf·cm, ft·lbf): Specified torque
◆ Non−reusable part
A23182

CH0N8−01

DISASSEMBLY

1. REMOVE GENERATOR PULLEY

SST 09820−63011

(a) Hold SST (A) with a torque wrench, and tighten SST (B) clockwise with the specified torque.

Torque: 39 N·m (400 kgf·cm, 29 ft·lbf)

NOTICE:

Check that SST is secured to the rotor shaft.

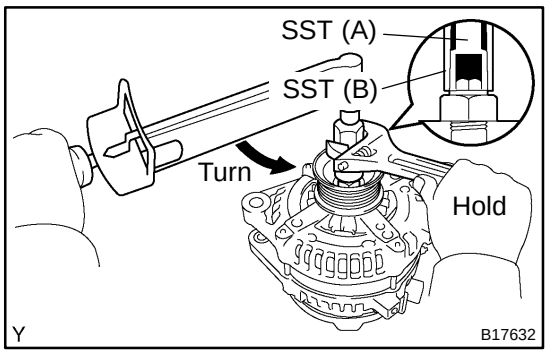

(b) Mount SST 2 in a vise.

(c) Insert SST (A) and (B) into SST (C), and attach the pulley nut to SST (C).

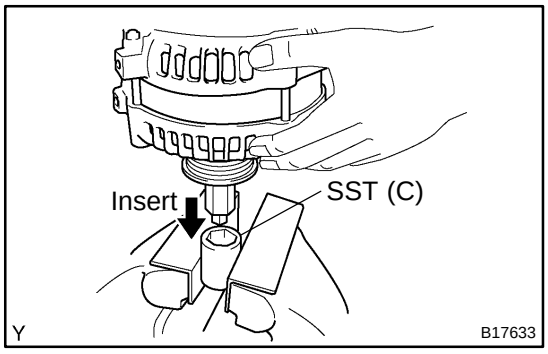

(d) To loosen the pulley nut, turn SST (A) in the direction shown in the illustration.

NOTICE:

To prevent damage to the rotor shaft, do not loosen the pulley nut more than one−half turn.

(e) Remove the generator from SST (C).

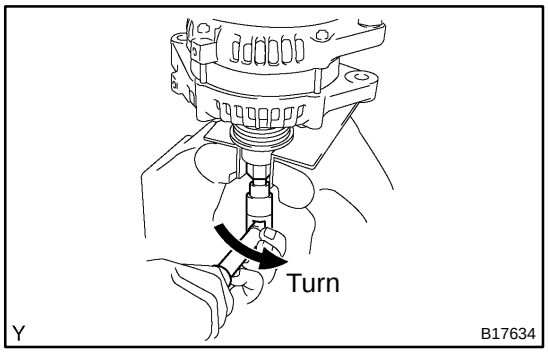

(f) Turn SST (B), and remove SST (A) and (B).

(g) Remove the pulley nut and pulley.

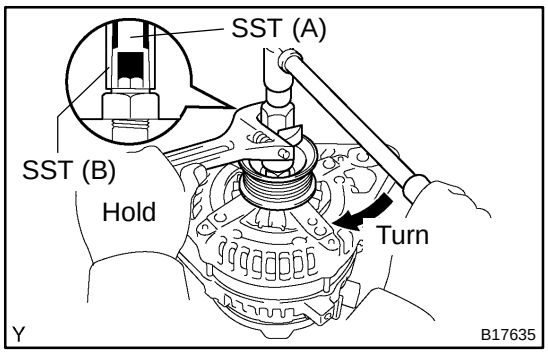

2. REMOVE GENERATOR REAR END COVER

(a) Place the generator on the pulley.

(b) Remove the 3 nuts and rear end cover.

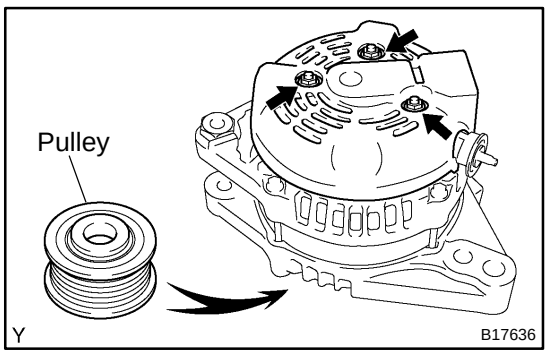

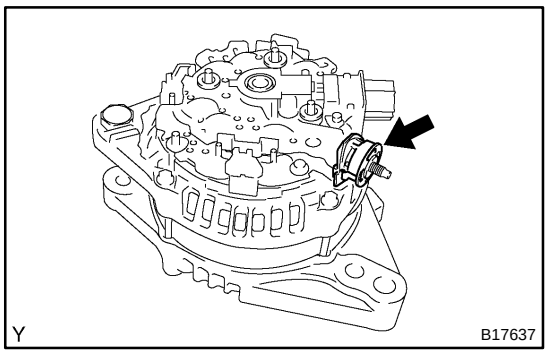

3. REMOVE TERMINAL INSULATOR

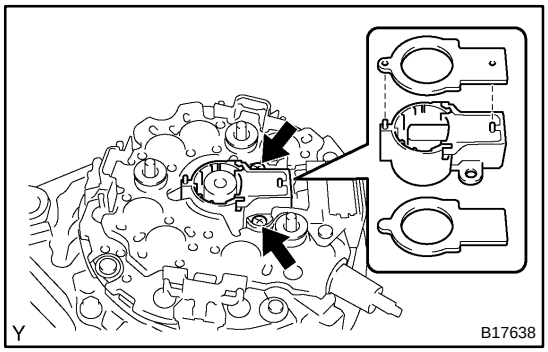

4. REMOVE GENERATOR BRUSH HOLDER ASSY

(a) Remove the plate seal.
(b) Remove the 2 nuts and brush holder.
(c) Remove the plate seal.

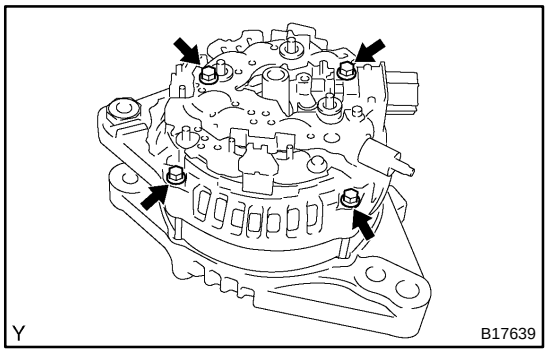

5. REMOVE GENERATOR COIL ASSY

(a) Remove the 4 bolts.

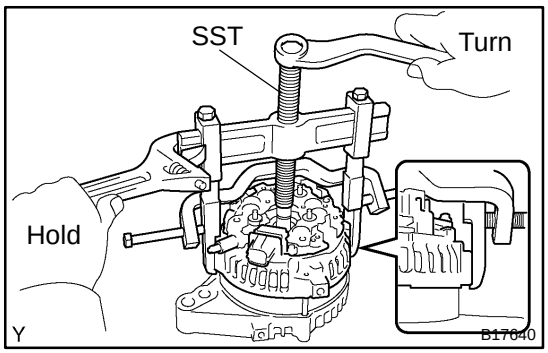

(b) Using SST, remove the coil.
SST 09950−40011 (09951−04020, 09952−04010, 09953−04020, 09954−04010, 09955−04071, 09957−04010, 09958−04011)

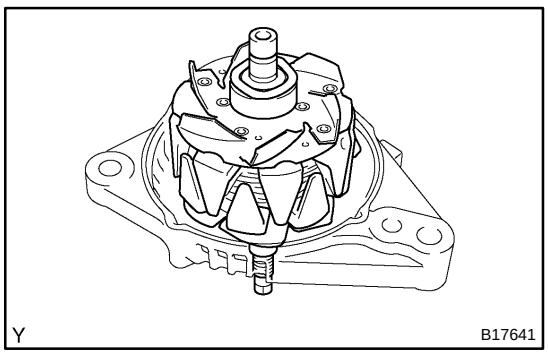

6. REMOVE GENERATOR ROTOR ASSY

(a) Remove the washer and rotor.

CH0N9−01

INSPECTION

1. INSPECT ROTOR

(a) Check the rotor for open circuit.
Using an ohmmeter, check that there is continuity between the slip rings.
Standard resistance: 2.3 to 2.7 Ω at 20˚C (68˚F)

If there is no continuity, replace the rotor.

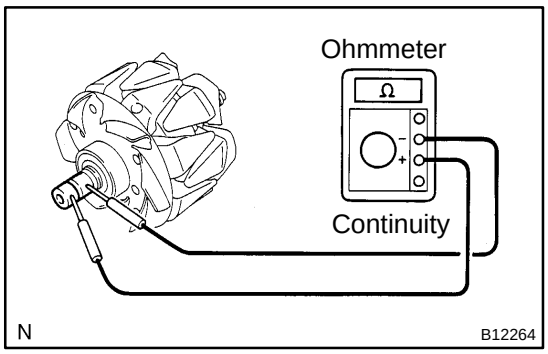

(b) Check the rotor for ground.
Using an ohmmeter, check that there is no continuity between the slip ring and rotor.

If there is continuity, replace the rotor.

(c) Check that the slip rings are not rough or scored.

If rough or scored, replace the rotor.

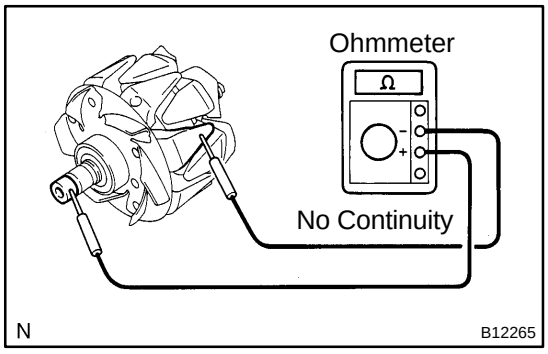

(d) Using vernier calipers, measure the slip ring diameter.
Standard diameter: 14.2 to 14.4 mm (0.559 to 0.567 in.)
Minimum diameter: 14.0 mm (0.551 in.)

If the diameter is less than the minimum, replace the rotor.

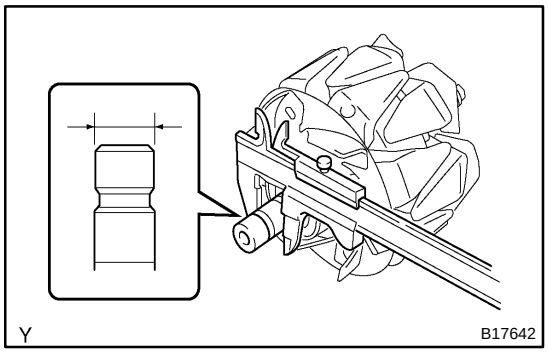

2. INSPECT BRUSHES

Using vernier caliper, measure the exposed brush length.
Standard exposed length: 10.5 mm (0.413 in.)
Minimum exposed length: 4.5 mm (0.177 in.)

If the exposed length is less than the minimum, replace the brushes and the brush holder assembly.

3. INSPECT BEARING

Check the bearing is not rough or worn.

If necessary, replace the bearing (See page CH−11).

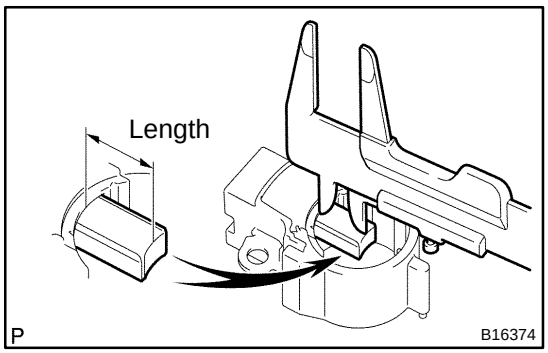

CH0NC−01

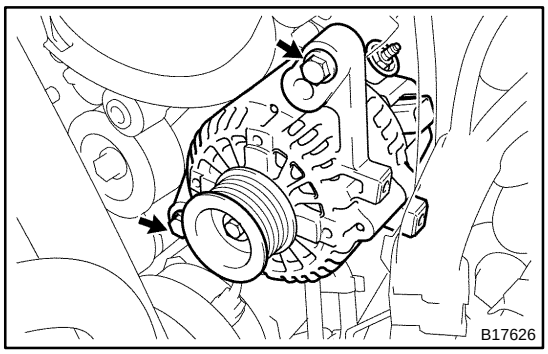

INSTALLATION

1. INSTALL GENERATOR

(a) Install the generator with the 2 bolts.

Torque: 43 N·m (438 kgf·cm, 32 ft·lbf)

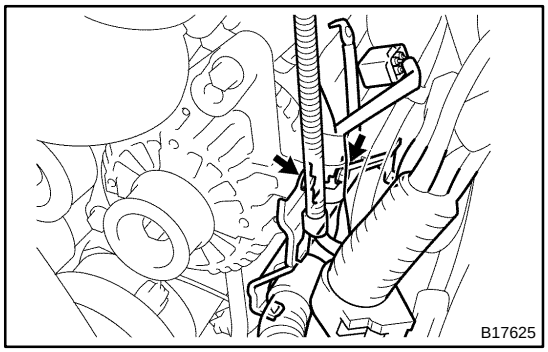

(b) Install the wire harness clamp bracket with the 2 bolts.

Torque: 8.0 N·m (82 kgf·cm, 71 in.·lbf)

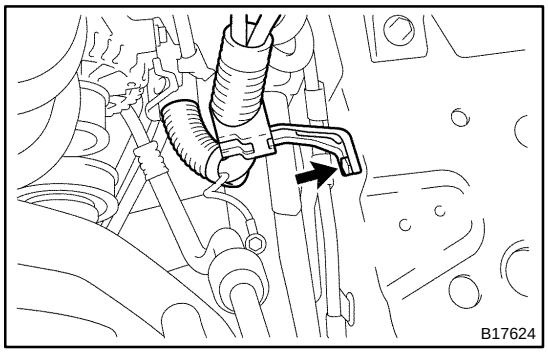

(c) Connect the wire harness.

(1) Connect the wire harness to the terminal B and install the nut.

Torque: 9.8 N·m (100 kgf·cm, 7 ft·lbf)

(2) Connect the connector to the generator assy.

(3) Install the wire harness stay with the bolt.

Torque: 8.0 N·m (82 kgf·cm, 71 in.·lbf)

2. INSTALL BATTERY

3. INSTALL FAN AND GENERATOR V BELT

(See page EM−89)

4. INSTALL ENGINE UNDER COVER SUB−ASSY NO.1

Install the engine under cover sub−assy No. 1 with the 4 bolts.

Torque: 29 N·m (296 kgf·cm, 21 ft·lbf)

5. INSTALL V−BANK COVER

Install the V−bank cover with the 2 nuts.

Torque: 9.8 N·m (100 kgf·cm, 87 in.·lbf)

CH0NB−01

REASSEMBLY

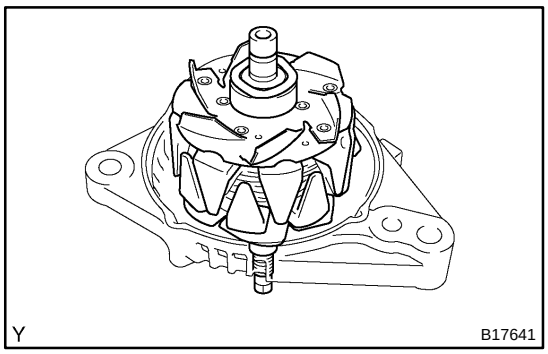

1. INSTALL GENERATOR ROTOR ASSY

(a) Place the drive end frame on the rotor.

(b) Install the rotor and washer.

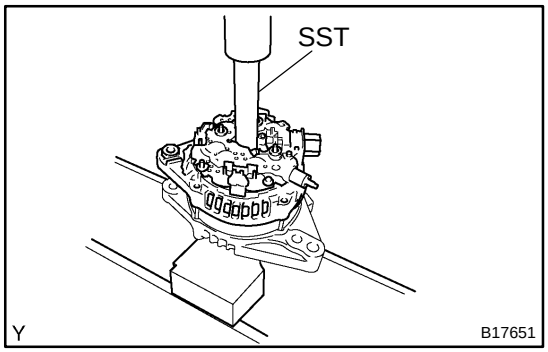

2. INSTALL GENERATOR COIL ASSY

(a) Using SST and a press, press in the coil carefully.
SST 09285−76010

(b) Install the 4 bolts.
Torque: 5.8 N·m (59 kgf·cm, 51 in.·lbf)

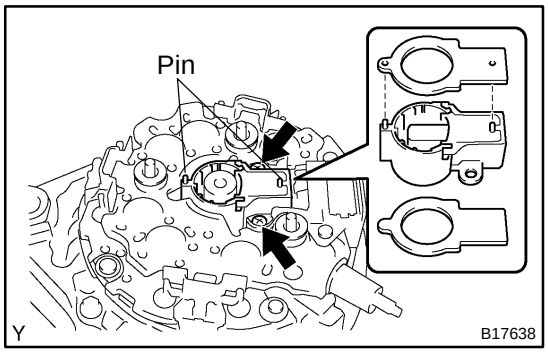

3. INSTALL GENERATOR BRUSH HOLDER ASSY

(a) Install the plate seal (Inside).

(b) Place the brush holder with the pin facing upward.

NOTICE:

Be careful of the brush holder installing direction.

(c) Install the 2 screws.
Torque: 1.8 N·m (18 kgf·cm, 16 in.·lbf)

(d) Align the pins of the brush holder with the holes of the plate seal (outside), and install the plate seal (outside).

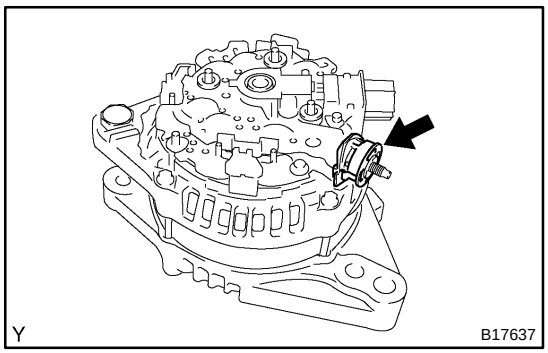

4. INSTALL TERMINAL INSULATOR

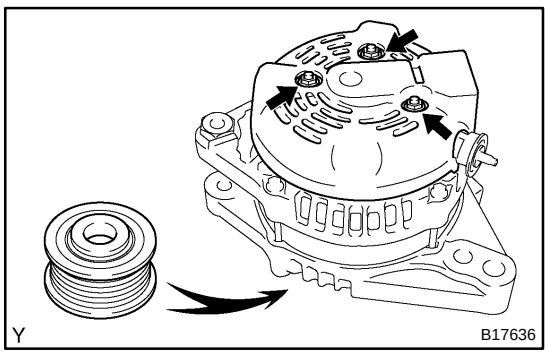

5. INSTALL GENERATOR REAR END COVER

(a) Install the rear end cover with the 3 nuts.
Torque: 4.6 N·m (47 kgf·cm, 41 in.·lbf)

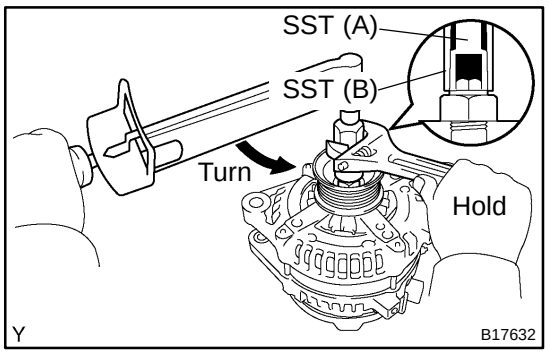

6. INSTALL GENERATOR PULLEY

SST 09820−63011

(a) Install the pulley to the rotor shaft by tightening the pulley nut by hand.

(b) Hold SST (A) with a torque wrench, and tighten SST (B) clockwise with the specified torque.

Torque: 39 N·m (400 kgf·cm, 29 ft·lbf)

NOTICE:

Check that SST is secured to the rotor shaft.

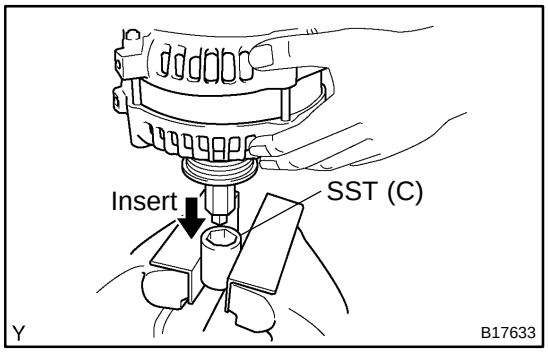

(c) Mount SST (C) in a vise.

(d) Insert SST (A) and (B) into SST (C), and attach the pulley nut to SST (C)

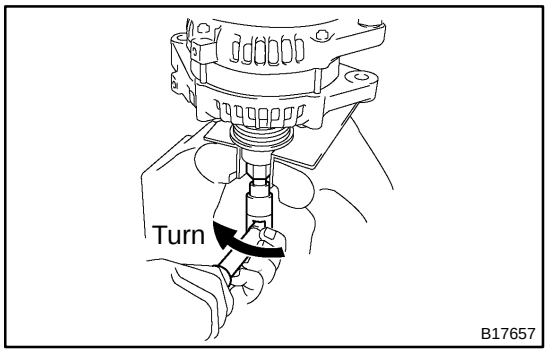

(e) Tighten the pulley nut by turning SST (A) in the direction shown in the illustration.

Torque: 111 N·m (1,125 kgf·cm, 81 ft·lbf)

(f) Remove the generator from SST (C).

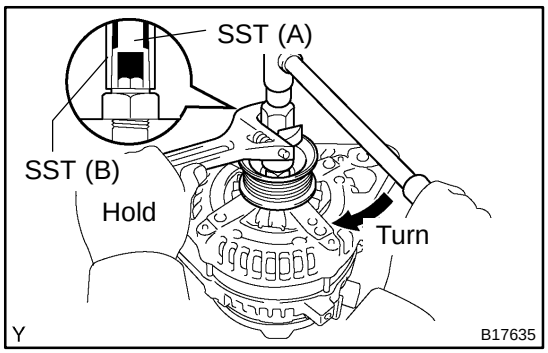

(g) Turn SST (B), and remove SST (A), (B).

(h) Turn the pulley, and check that the pulley moves smoothly.

CH0N7−01

REMOVAL

1. REMOVE V−BANK COVER

2. REMOVE ENGINE UNDER COVER

Remove the 4 bolts and engine under cover.

3. REMOVE FAN AND GENERATOR V BELT
(See page EM−62)

4. REMOVE BATTERY

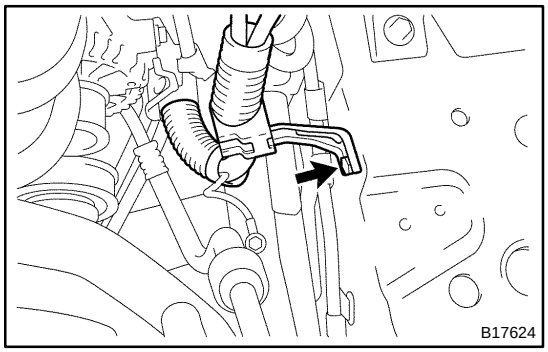

5. REMOVE GENERATOR

(a) Disconnect the wire harness.
  (1) Remove the bolt and wire harness stay.
  (2) Disconnect the connector from the generator.
  (3) Remove the terminal cap and nut.
  (4) Disconnect the wire harness from the terminal B.

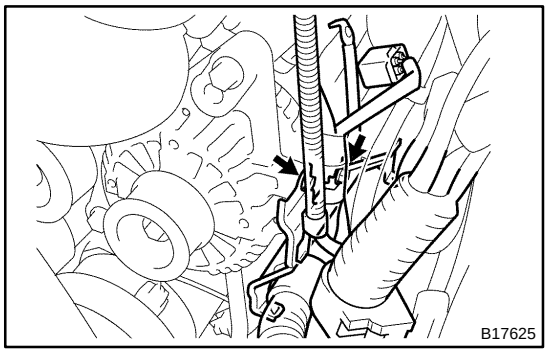

(b) Remove the 2 bolts and wire harness clamp bracket from the generator assy.

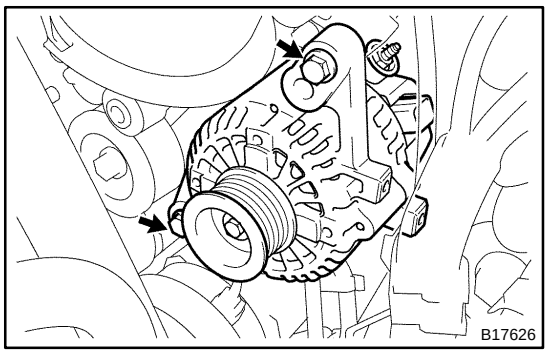

(c) Remove the 2 bolts and generator.

CH0NA−01

REPLACEMENT

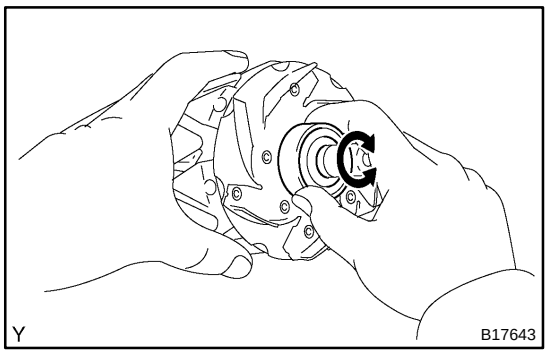

1. INSPECT GENERATOR ROTOR BEARING

(a) Check the bearing is not rough or worn.

If necessary, replace the bearing.

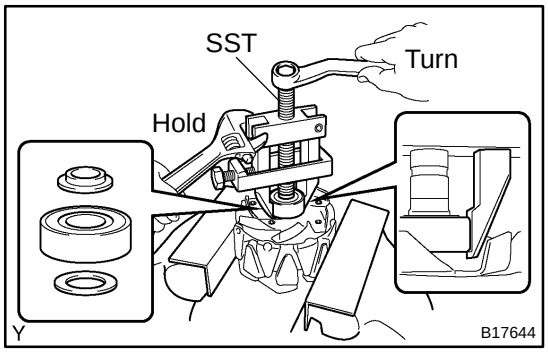

2. REMOVE GENERATOR ROTOR BEARING

SST 09820−00021

NOTICE:

Be careful not to damage the fan.

(a) Remove the bearing cover (Inside).

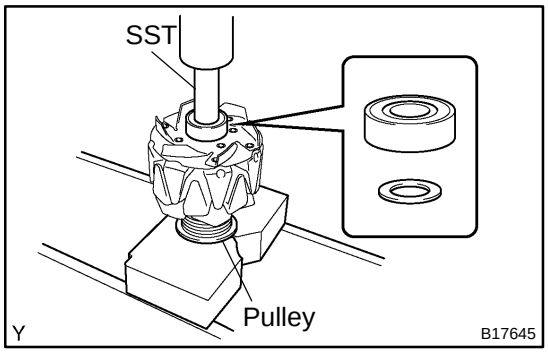

3. INSTALL GENERATOR ROTOR BEARING

(a) Place the rotor on the pulley.

(b) Install the bearing cover (Inside).

(c) Using SST and a press, press in a new bearing.

SST 09820−00031

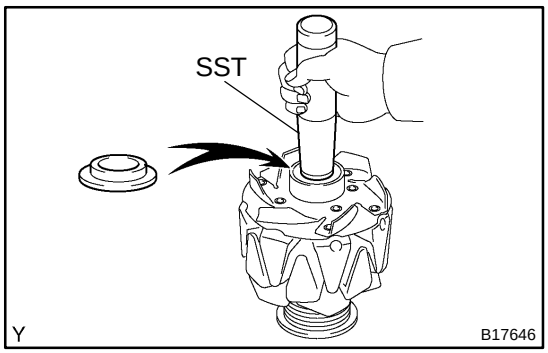

(d) Using SST, push in the bearing cover (outside).

SST 09285−76010

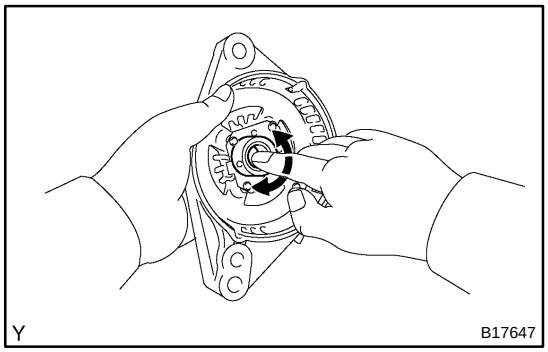

4. INSPECT GENERATOR DRIVE END FRAME BEARING

(a) Check the bearing is not rough or worn.

If necessary, replace the bearing.

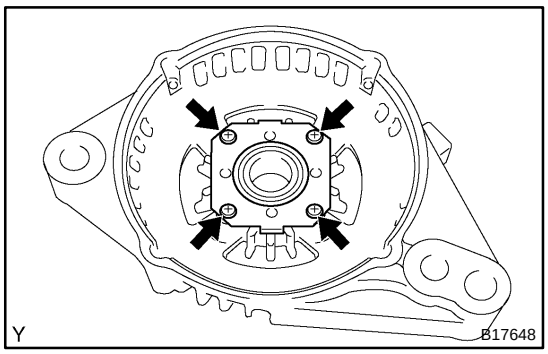

5. REMOVE GENERATOR DRIVE END FRAME BEARING

(a) Remove the 4 screws and retainer plate.

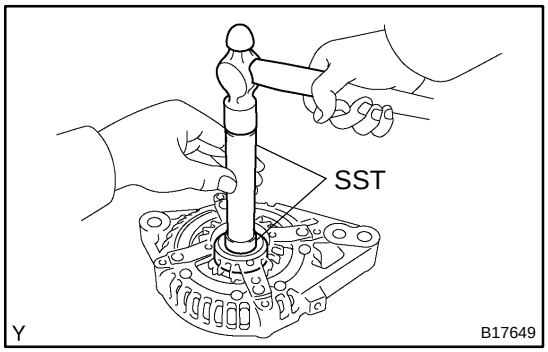

(b) Using SST, tap out the bearing.
SST 09950−60010 (09951−00250), 09950−70010 (09951−07100)

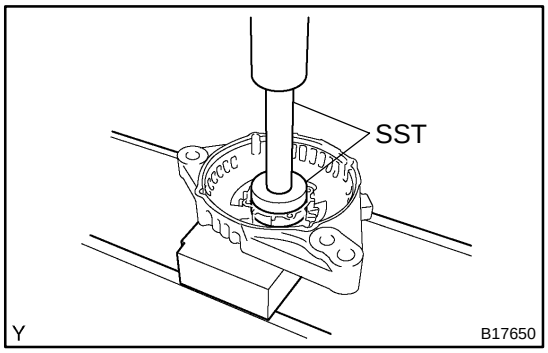

6. INSTALL GENERATOR DRIVE END FRAME BEARING

(a) Using SST and a press, press in a new bearing.
SST 09950−60010 (09951−00470), 09950−70010 (09951−07100)

(b) Install the retainer plate with the 4 screws.
Torque: 2.6 N·m (27 kgf·cm, 23 in.·lbf)

CHARGING SYSTEM

CH0J6−03

ON−VEHICLE INSPECTION

CAUTION:

- **Check that the battery cables are connected to the correct terminals.**
- **Disconnect the battery cables when the battery is given a quick charge.**
- **Do not perform tests with a high voltage insulation resistance tester.**
- **Never disconnect the battery while the engine is running.**

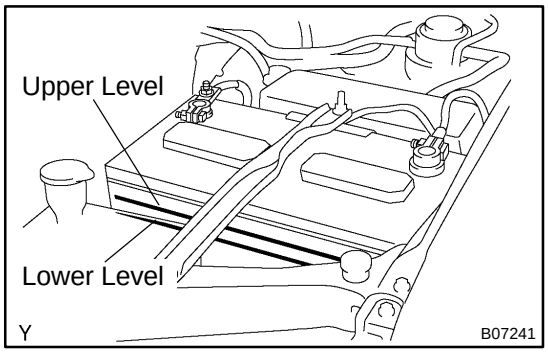

1. CHECK BATTERY ELECTROLYTE LEVEL

Check the electrolyte quantity of each cell.

Maintenance−Free Battery:

If under the lower level, replace the battery (or add distilled water if possible) and check the charging system.

Except Maintenance−Free Battery:

If under the lower level, add distilled water.

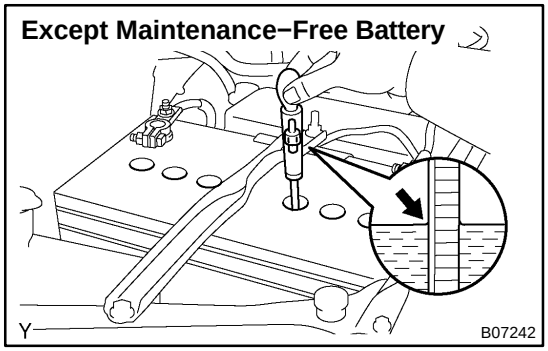

2. Except Maintenance−Free Battery: CHECK BATTERY SPECIFIC GRAVITY

Check the specific gravity of each cell.

Standard specific gravity: 1.25 to 1.29 at 20˚C (68˚F)

If the specific gravity is less than specification, charge the battery.

3. Maintenance−Free Battery: CHECK BATTERY VOLTAGE

(a) After having driven the vehicle and in the case that 20 minutes have not passed after having stopped the engine, turn the ignition switch ON and turn on the electrical system (headlight, blower motor, rear defogger etc.) for 60 seconds to remove the surface charge.

(b) Turn the ignition switch OFF and turn off the electrical systems.

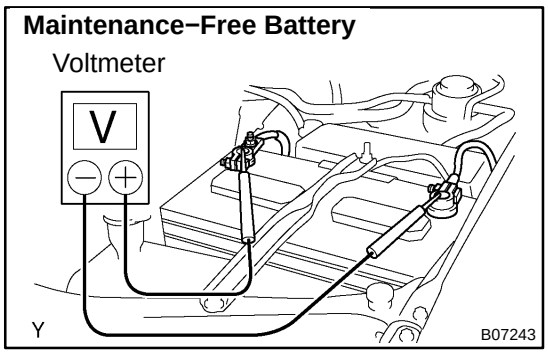

(c) Measure the battery voltage between the negative (−) and positive (+) terminals of the battery.
Standard voltage: 12.5 to 12.9 V at 20˚C (68˚F)

If the voltage is less than specification, charge the battery.

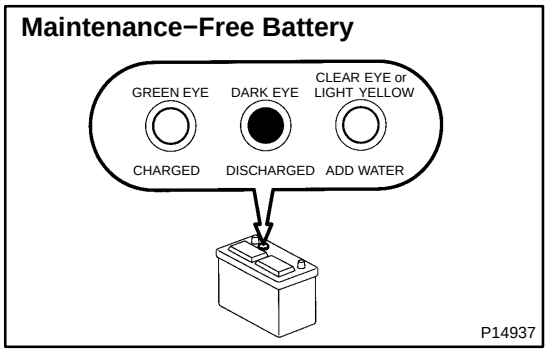

HINT:
Check the indicator as shown in the illustration.

4. CHECK BATTERY TERMINALS, FUSIBLE LINK AND FUSES

(a) Check that the battery terminals are not loose or corroded.

(b) Check the fusible link and fuses for continuity.

5. INSPECT DRIVE BELT

HINT:
A belt tensioner is used, so checking the belt tension is not necessary.

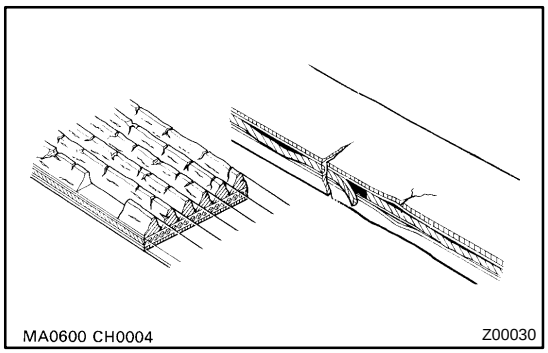

(a) Visually check the drive belt for excessive wear, frayed cords etc.

If necessary, replace the drive belt.

HINT:

- Cracks on the rib side of a drive belt are considered acceptable. If the drive belt has chunks missing from the ribs, it should be replaced.
- The drive belt tension can be released by turning the belt tensioner counterclockwise. The pulley bolt for the belt tensioner has a left−hand thread.

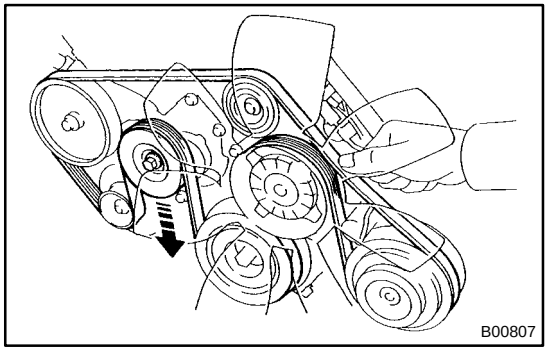

(b) Check the belt tensioner operation.

- Check that the belt tensioner moves downward when the drive belt is pressed down at the points indicated in the illustration with approx. 98 N (10 kgf, 22.0 lbf) of force.
- Check the alignment of the belt tensioner pulley to make sure the drive belt has not slipped off the pulley.

If necessary, replace the belt tensioner.

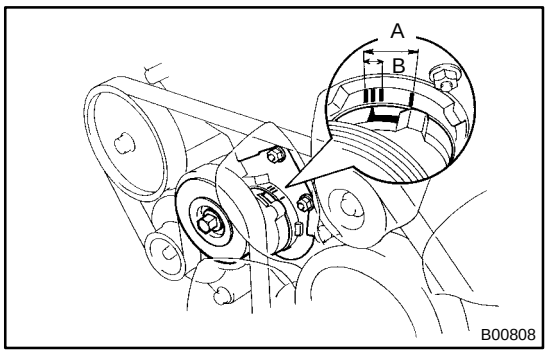

- Check that the arrow mark on the belt tensioner falls within area A of the scale.

If it is outside area A, replace the drive belt.

HINT:

- When a new belt is installed, it should lie within area B. If not, the drive belt is not correct.

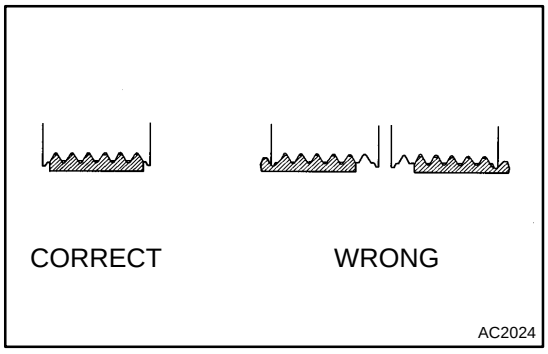

- After installing a belt, check that it fits properly in the ribbed grooves.
- Check by hand to confirm that the belt has not slipped out of the groove on the bottom of the pulley.

6. REMOVE ENGINE UNDER COVER

7. VISUALLY CHECK GENERATOR WIRING AND LISTEN FOR ABNORMAL NOISES

(a) Check that the wiring is in good condition.

(b) Check that there is no abnormal noise from the generator while the engine is running.

8. CHECK CHARGE WARNING LIGHT CIRCUIT

(a) Warm up the engine and then turn it off.

(b) Switch off all accessories.

(c) Turn the ignition switch ON, and check that the charge warning light is lit.

(d) Start the engine, and check that the light goes off.

If the light does not go off as specified, troubleshoot the charge light circuit.

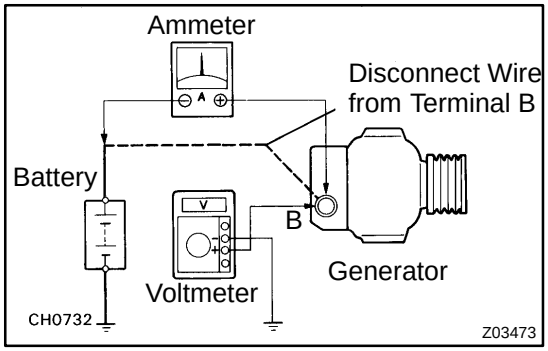

9. INSPECT CHARGING CIRCUIT WITHOUT LOAD

HINT:

If a battery/generator tester is available, connect the tester to the charging circuit as per manufacturer's instructions.

(a) If a tester is not available, connect a voltmeter and ammeter to the charging circuit as follows:

- Disconnect the wire from terminal B of the generator, and connect it to the negative (−) tester probe of the ammeter.
- Connect the positive (+) tester probe of the ammeter to terminal B of the generator.
- Connect the positive (+) tester probe of the voltmeter to terminal B of the generator.
- Ground the negative (−) tester probe of the voltmeter.

(b) Check the charging circuit as follows:

With the engine running from idling to 2,000 rpm, check the reading on the ammeter and voltmeter.

Standard amperage: 10 A or less

Standard voltage: 13.2 − 14.8 V

If the voltmeter reading is more than standard voltage, replace the voltage regulator.

If the voltmeter reading is less than standard voltage, check the voltage regulator and generator.

10. INSPECT CHARGING CIRCUIT WITH LOAD

(a) With the engine running at 2,000 rpm, turn on the high beam headlights and place the heater blower switch at HI.

(b) Check the reading on the ammeter.

Standard amperage: 30 A or more

If the ammeter reading is less than the standard amperage, repair the generator.

HINT:

If the battery is fully charged, the indication will sometimes be less than standard amperage.

11. REINSTALL ENGINE UNDER COVER

GENERATOR (Standard Spec.)

COMPONENTS

CH0LL−02

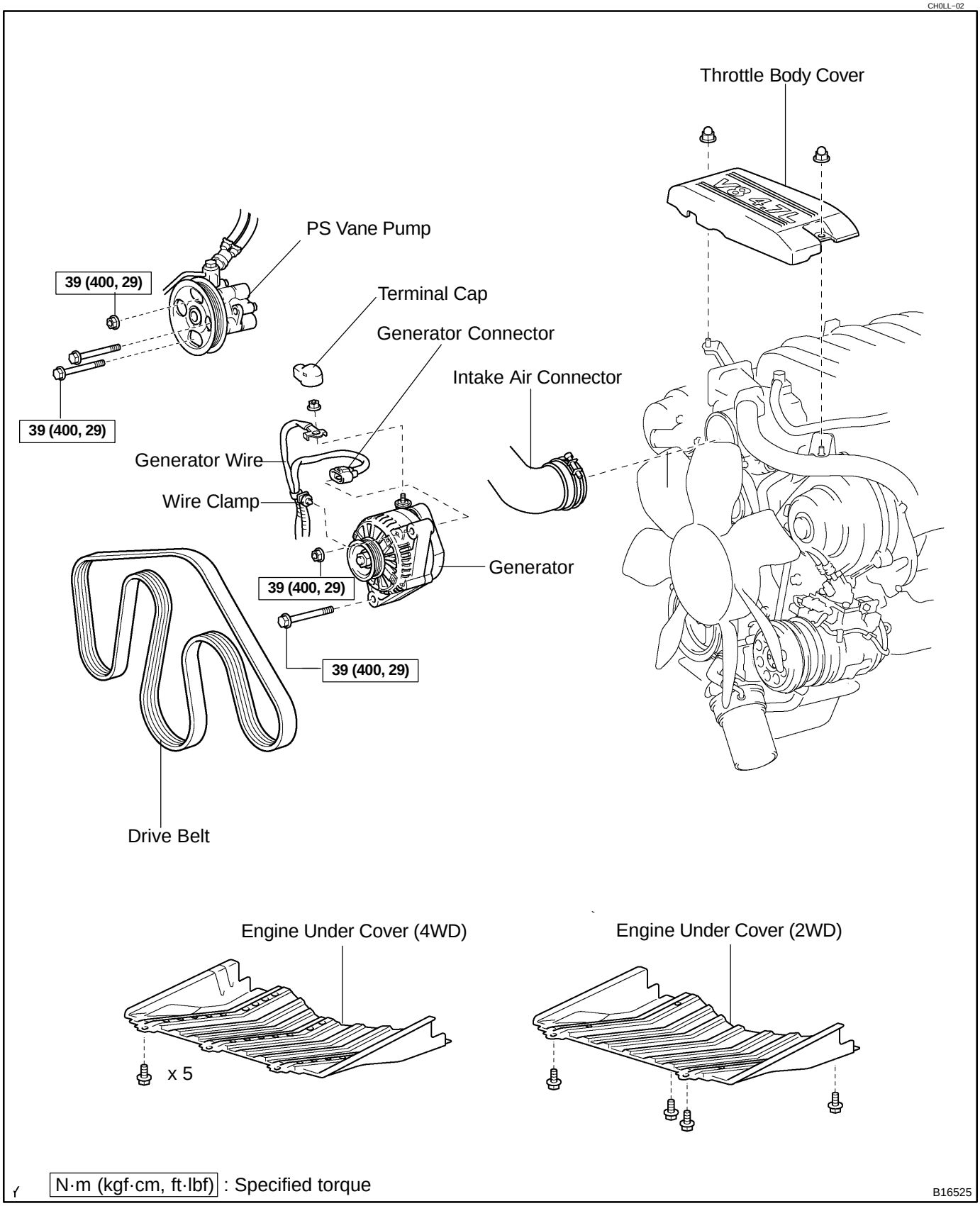

N·m (kgf·cm, ft·lbf) : Specified torque

B16525

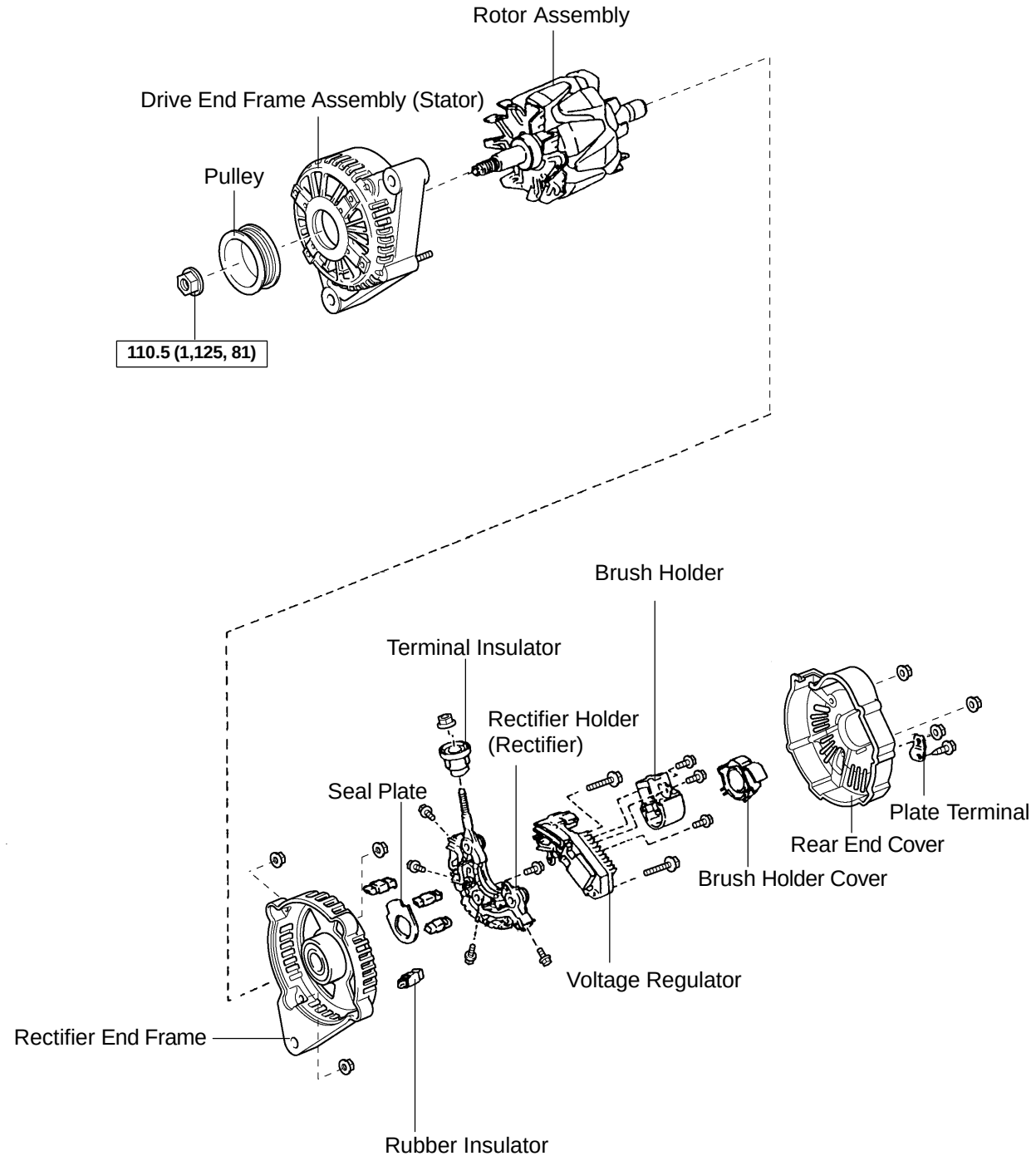

N·m (kgf·cm, ft·lbf): Specified torque
◆ Non−reusable part

Y

B16590

CH0LN−01

DISASSEMBLY

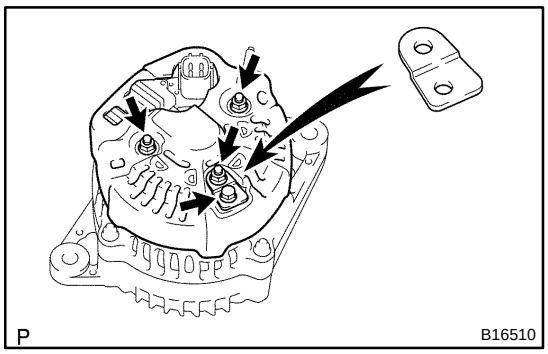

1. REMOVE REAR END COVER

(a) Remove the nut and terminal insulator.
(b) Remove the bolt 3 nuts, plate terminal and end cover.
(c) Remove the brush holder cover from the brush holder.

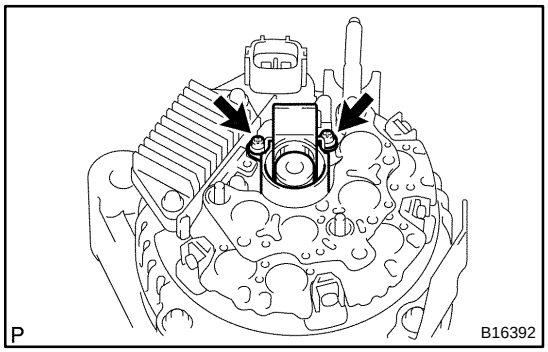

2. REMOVE BRUSH HOLDER

(a) Remove the 2 screws and brush holder.
(b) Remove the seal plate from the rectifier end frame.

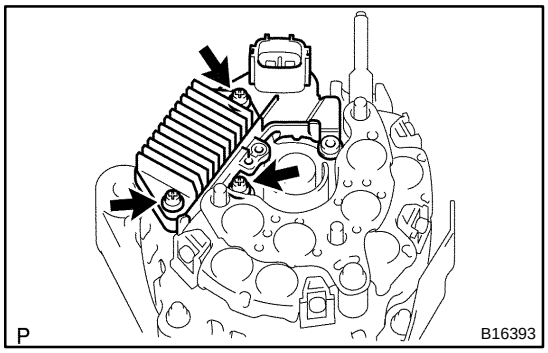

3. REMOVE VOLTAGE REGULATOR AND RECTIFIER HOLDER

(a) Remove the 3 screws and voltage regulator.

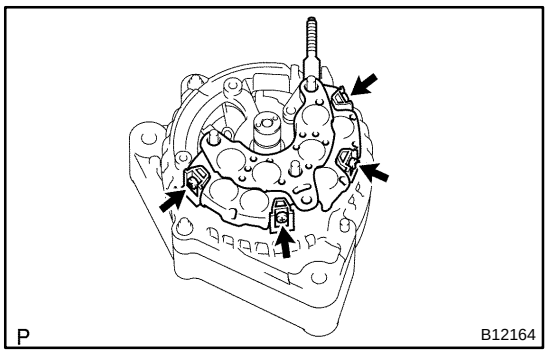

(b) Remove the 4 screws and rectifier holder.
(c) Remove the 4 rubber insulators.

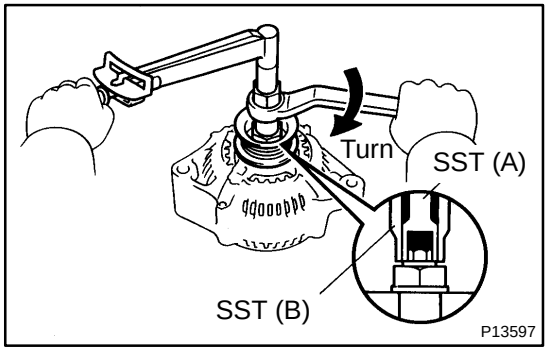

4. REMOVE PULLEY

(a) Hold SST (A) with a torque wrench, and tighten SST (B) clockwise to the specified torque.
SST 09820−63011
Torque: 39 N·m (400 kgf·cm, 29 ft·lbf)
(b) Check that SST (A) is secured to the rotor shaft.

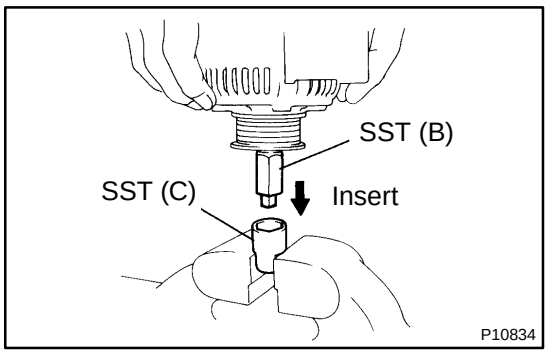

(c) Mount SST (C) in a vise.
(d) Insert SST (B) into SST (C), and attach the pulley nut to SST (C).

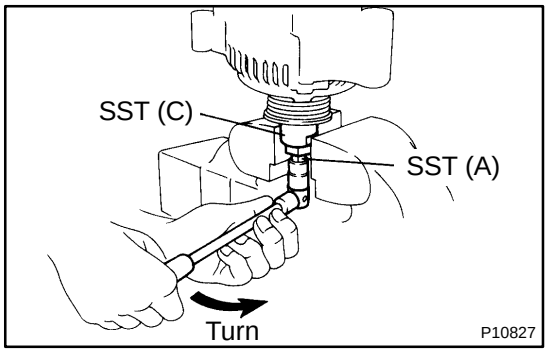

(e) To loosen the pulley nut, turn SST (A) in the direction shown in the illustration.

NOTICE:
To prevent damage to the rotor shaft, do not loosen the pulley nut more than one−half of a turn.

(f) Remove the generator from SST (C).

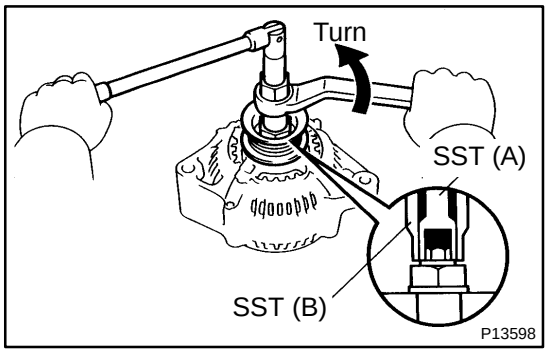

(g) Turn SST (B), and remove SST (A and B).
(h) Remove the pulley nut and pulley.

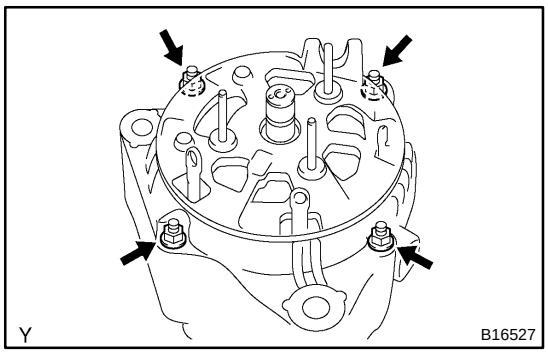

5. REMOVE RECTIFIER END FRAME

(a) Remove the 4 nuts.

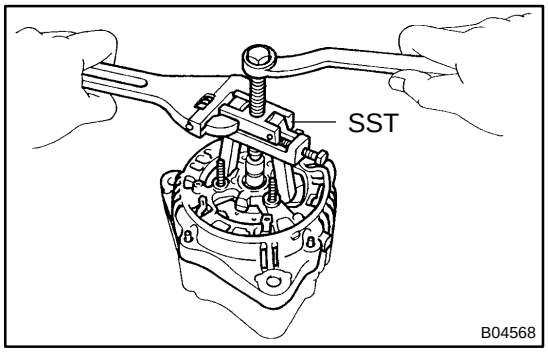

(b) Using SST, remove the rectifier end frame.
SST 09286−46011

(c) Remove the generator washer from the rectifier end frame.

6. REMOVE ROTOR FROM DRIVE END FRAME

CH0LO−02

INSPECTION

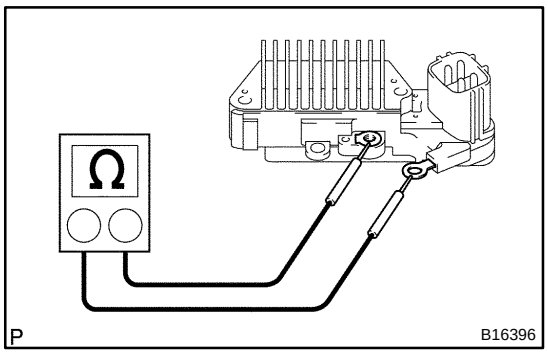

1. INSPECT VOLTAGE REGULATOR

(a) Using an ohmmeter, check the continuity between terminals F and B.

Standard:

When the positive and negative poles between terminals F and B are exchanged, there is continuity in one way but no continuity in another way.

If the continuity is not as specified, replace the regulator.

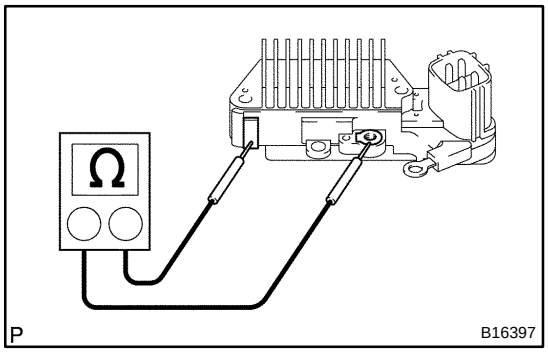

(b) Using an ohmmeter, check the continuity between terminals F and E.

Standard:

When the positive and negative poles between terminals F and E are exchanged, there is continuity in one way but no continuity in another way.

If the continuity is not as specified, replace the regulator.

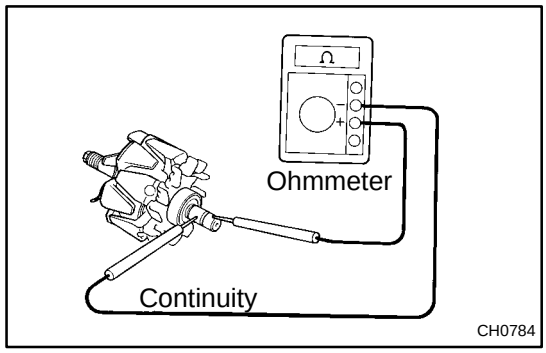

2. INSPECT ROTOR FOR OPEN CIRCUIT

(a) Check the rotor for open circuit.

Using an ohmmeter, check that there is continuity between the slip rings.

Standard resistance: 2.1 to 2.5 Ω at 20˚C (68˚F)

If there is no continuity, replace the rotor.

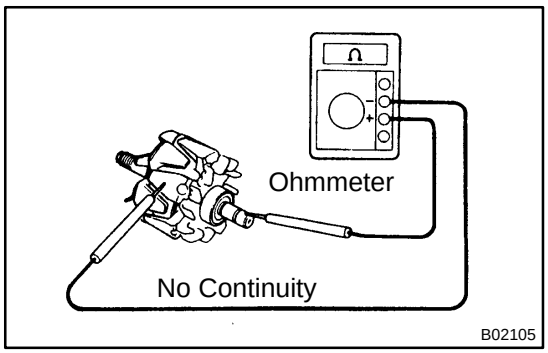

(b) Check the rotor for ground.

Using an ohmmeter, check that there is no continuity between the slip ring and rotor.

If there is continuity, replace the rotor.

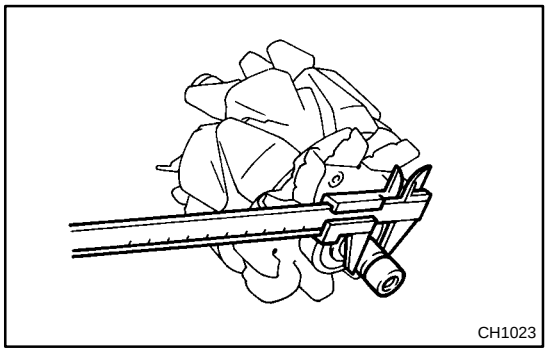

(c) Check that the slip rings are not rough or scored.

If rough or scored, replace the rotor.

(d) Using vernier calipers, measure the slip ring diameters.

Standard diameter: 14.2 to 14.4 mm (0.559 to 0.567 in.)

Minimum diameter: 12.8 mm (0.504 in.)

If the diameter is less than minimum, replace the rotor.

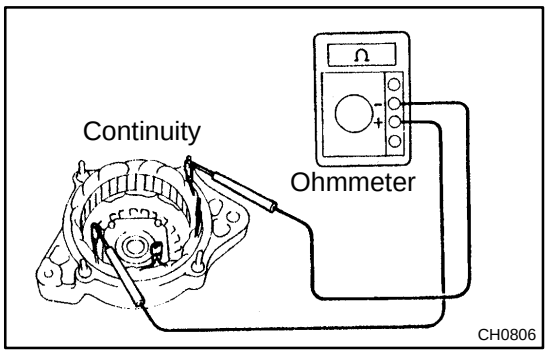

3. INSPECT STATOR FOR OPEN CIRCUIT

(a) Check the stator for open circuit.
Using an ohmmeter, check that there is continuity between the coil leads.

If there is no continuity, replace the drive end frame assembly.

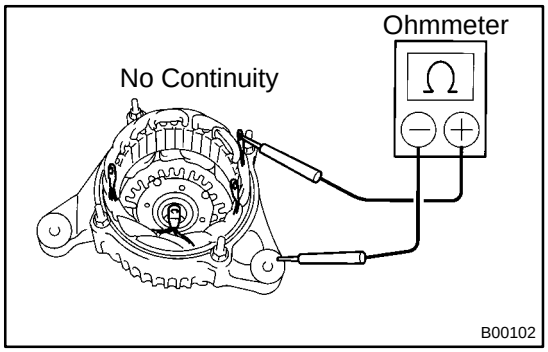

(b) Check the stator for ground.
Using an ohmmeter, check that there is no continuity between the coil lead and drive end frame.

If there is continuity, replace the drive end frame assembly.

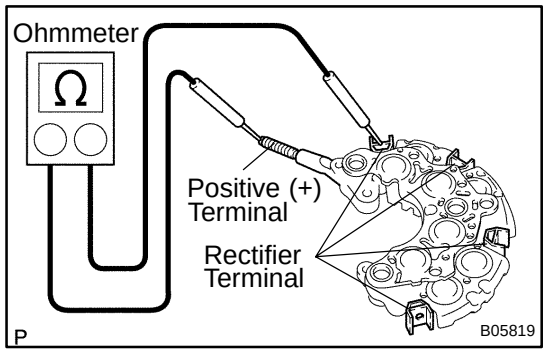

4. INSPECT POSITIVE RECTIFIER

(a) Check the positive (+) rectifire.
(1) Using an ohmmeter, connect one tester probe to the positive (+) terminal and the other to each rectifier terminal.
(2) Reverse the polarity of the tester probes and repeat step (a).
(3) Check that one shows continuity and the other shows no continuity.

If continuity is not as specified, replace the rectifier holder.

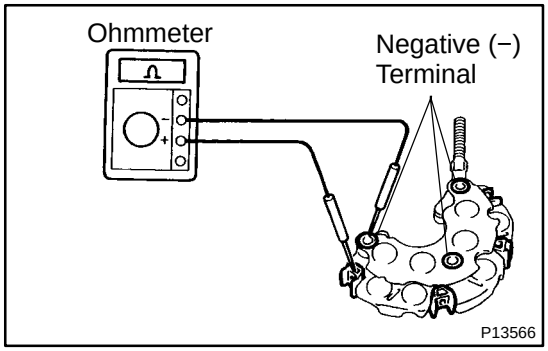

(b) Check the negative (−) rectifire.
(1) Using an ohmmeter, connect one tester probe to each negative (−) terminal and the other to each rectifier terminal.
(2) Reverse the polarity of the tester probes and repeat step (a).
(3) Check that one shows continuity and the other shows no continuity.

If continuity is not as specified, replace the rectifier holder.

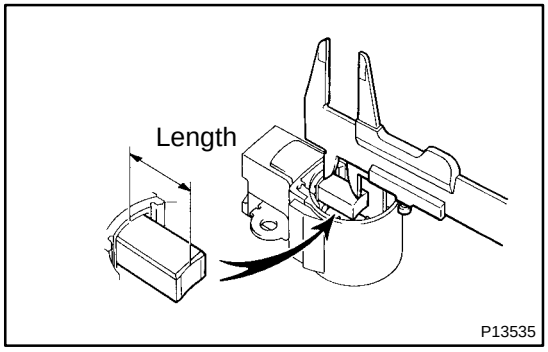

5. INSPECT EXPOSED BRUSH LENGTH

Using vernier calipers, measure the exposed brush length.

Standard exposed length:
9.5 to 11.5 mm (0.374 to 0.453 in.)
Minimum exposed length: 1.5 mm (0.059 in.)

If the exposed length is less than minimum, replace the brush holder assembly.

6. INSPECT BEARING

Check that the bearing is not rough or worn.

If necessary, replace the drive end frame assembly (front bearing) or rotor assembly (rear bearing).

CH0LQ−02

INSTALLATION

1. INSTALL GENERATOR

(a) Install the generator with the bolt and nut.
Torque: 39 N·m (400 kgf·cm, 29 ft·lbf)

(b) Connect the generator connector.

(c) Connect the generator wire with the nut and rubber.

(d) Install the terminal cap.

(e) Install the wire clamp to the cord clip on the generator.

2. INSTALL PS VANE PUMP (See page SR−69)

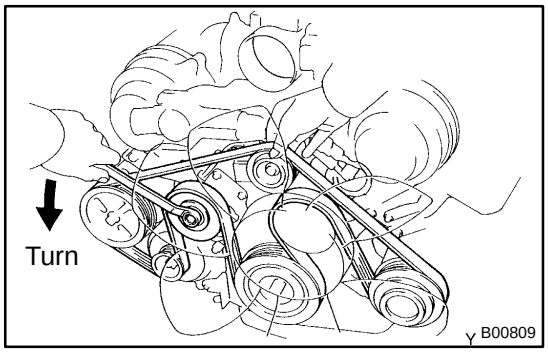

3. INSTALL DRIVE BELT

Install the belt by turning the belt tensioner counterclockwise.

HINT:

The pulley bolt for the belt tensioner has a left−hand thread.

4. CONNECT INTAKE AIR CONNECTOR TO THROTTLE BODY

5. PERFORM ON−VEHICLE INSPECTION (See page CH−1)

6. INSTALL THROTTLE BODY COVER

7. INSTALL ENGINE UNDER COVER

8. CONNECT CABLE TO NEGATIVE (−) BATTERY TERMINAL

CH0LP−01

REASSEMBLY

1. PLACE RECTIFIER END FRAME ON PULLEY

2. INSTALL ROTOR TO DRIVE END FRAME

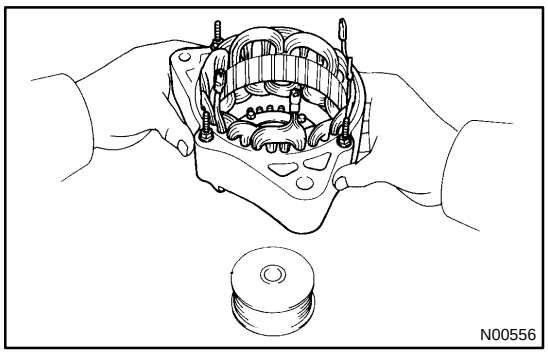

3. INSTALL RECTIFIER END FRAME

(a) Place the generator washer on the rotor.

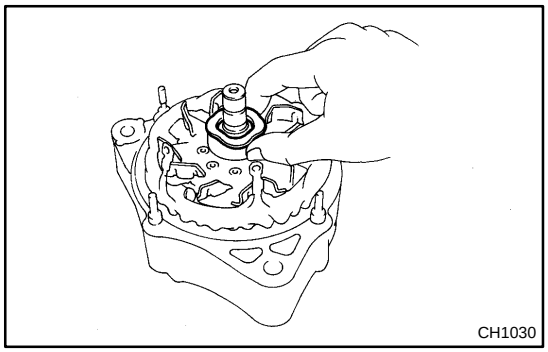

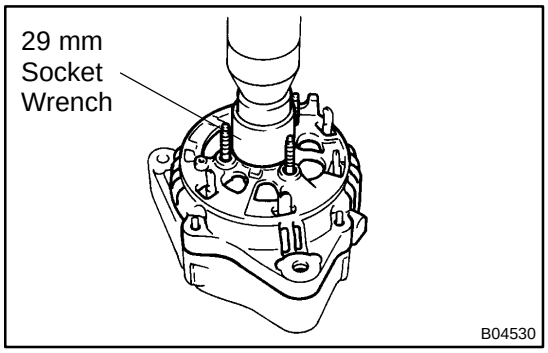

(b) Using a 29 mm socket wrench and press, slowly press in the rectifier end frame.

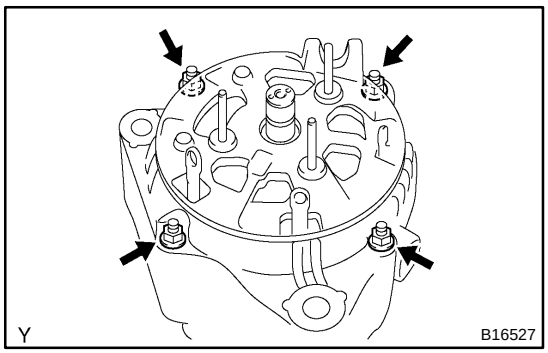

(c) Install the 4 nuts.
Torque: 4.5 N·m (46 kgf·cm, 39 in.·lbf)

4. INSTALL PULLEY

(a) Install the pulley to the rotor shaft by tightening the pulley nut by hand.

(b) Hold SST (A) with a torque wrench, and tighten SST (B) clockwise to the specified torque.
SST 09820−63011
Torque: 39 N·m (400 kgf·cm, 29 ft·lbf)

(c) Check that SST (A) is secured to the pulley shaft.

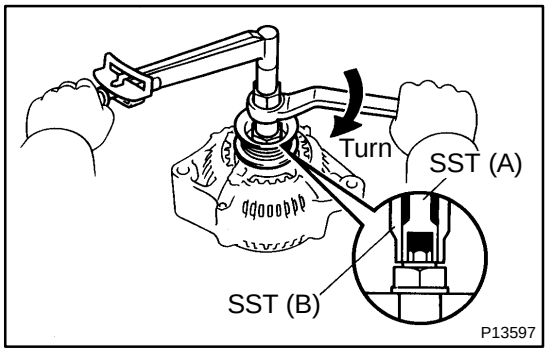

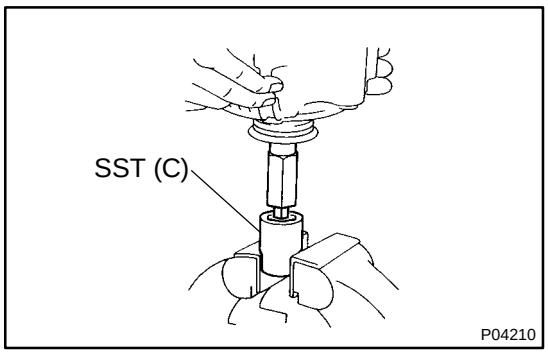

(d) Mount SST (C) in a vise.
(e) Insert SST (B) into SST (C), and attach the pulley nut to SST (C).

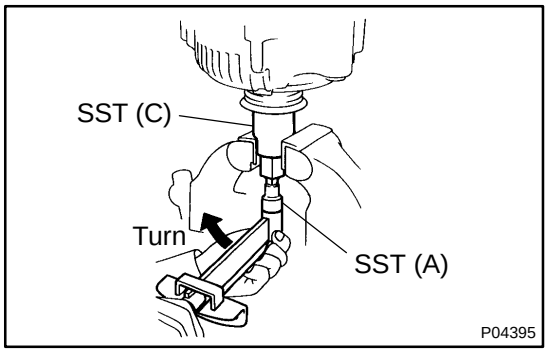

(f) To torque the pulley nut, turn SST (A) in the direction shown in the illustration.
Torque: 110.5 N·m (1,125 kgf·cm, 81 ft·lbf)
(g) Remove the generator from SST (C).

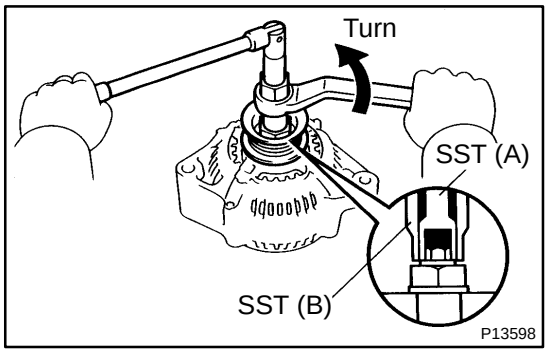

(h) Turn SST (B), and remove SST (A and B).

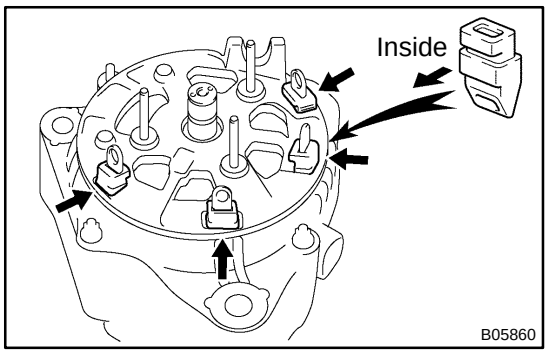

5. INSTALL RECTIFIER HOLDER
(a) Install the 4 rubber insulators on the lead wires.
NOTICE:
Be careful of the rubber insulators installation direction.

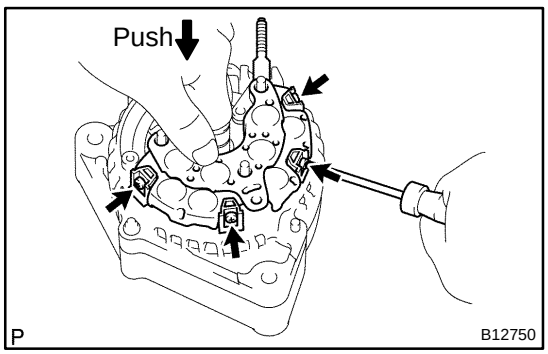

(b) Install the rectifier while pushing it with the 4 screws.
Torque: 1.96 N·m (20 kgf·cm, 17 in.·lbf)

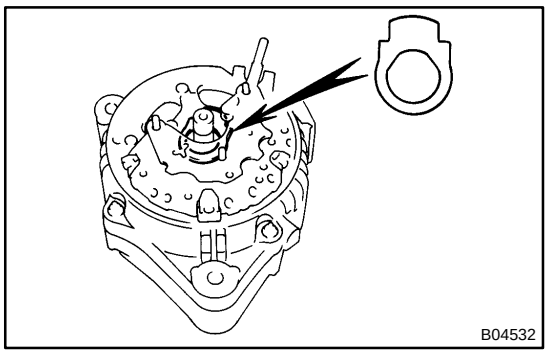

6. INSTALL BRUSH HOLDER AND VOLTAGE REGULATOR

(a) Place the seal plate on the rectifier end frame.

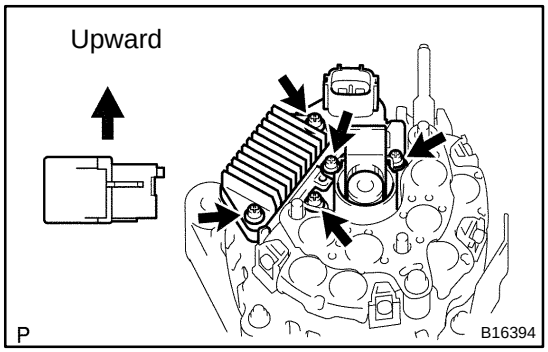

(b) Place the voltage regulator and brush holder on the rectifier end frame.

NOTICE:

Be careful of the brush holder installation direction.

(c) Install the 5 screws.

Torque: 1.96 N·m (20 kgf·cm, 17 in.·lbf)

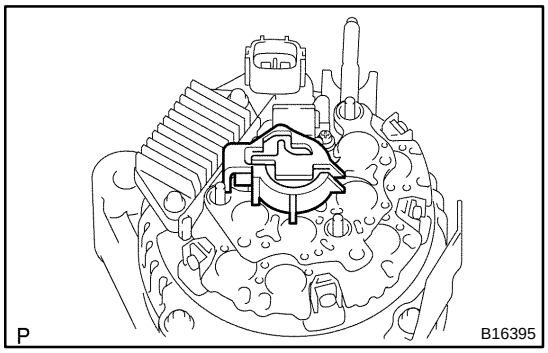

7. INSTALL REAR END COVER

(a) Place the brush holder cover on the brush holder.

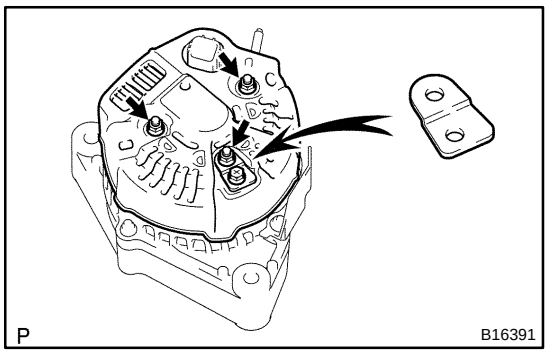

(b) Install the end cover and plate terminal with the bolt and 3 nuts.

Torque:

Bolt: 3.85 N·m (39 kgf·cm, 34 in.·lbf)

Nut: 4.4 N·m (46 kgf·cm, 39 in.·lbf)

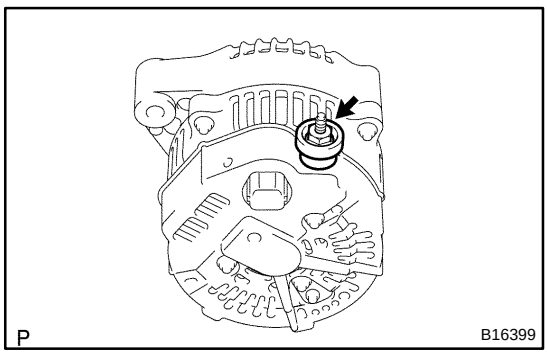

(c) Install the terminal insulator with the nut.

Torque: 4.1 N·m (41.5 kgf·cm, 36 in.·lbf)

8. CHECK THAT ROTOR ROTATES SMOOTHLY

CH0LM−02

REMOVAL

1. REMOVE ENGINE UNDER COVER
2. REMOVE THROTTLE BODY COVER
3. DISCONNECT CABLE FROM NEGATIVE (−) BATTERY TERMINAL
4. DISCONNECT INTAKE AIR CONNECTOR FROM THROTTLE BODY

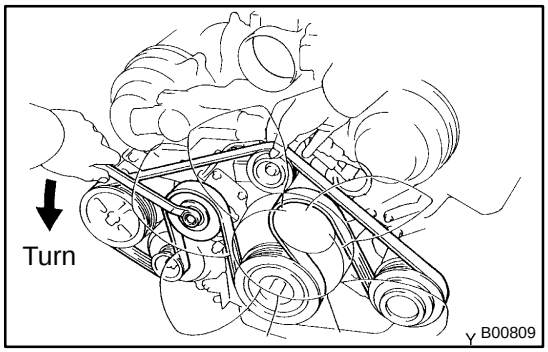

5. REMOVE GENERATOR DRIVE BELT

Loosen the belt tension by turning the belt tensioner counter-clockwise, and remove the drive belt.

HINT:

The pulley bolt for the belt tensioner has a left hand thread.

6. REMOVE PS VANE PUMP FROM ENGINE (See page SR−61)
7. REMOVE GENERATOR

(a) Disconnect the generator connector.
(b) Remove the terminal cap and nut, and disconnect the generator wire.
(c) Disconnect the wire clamp from the cord clip on the generator.
(d) Remove the bolt, nut and generator.

GENERATOR (Towing Package Spec.)

CH0LR−02

COMPONENTS

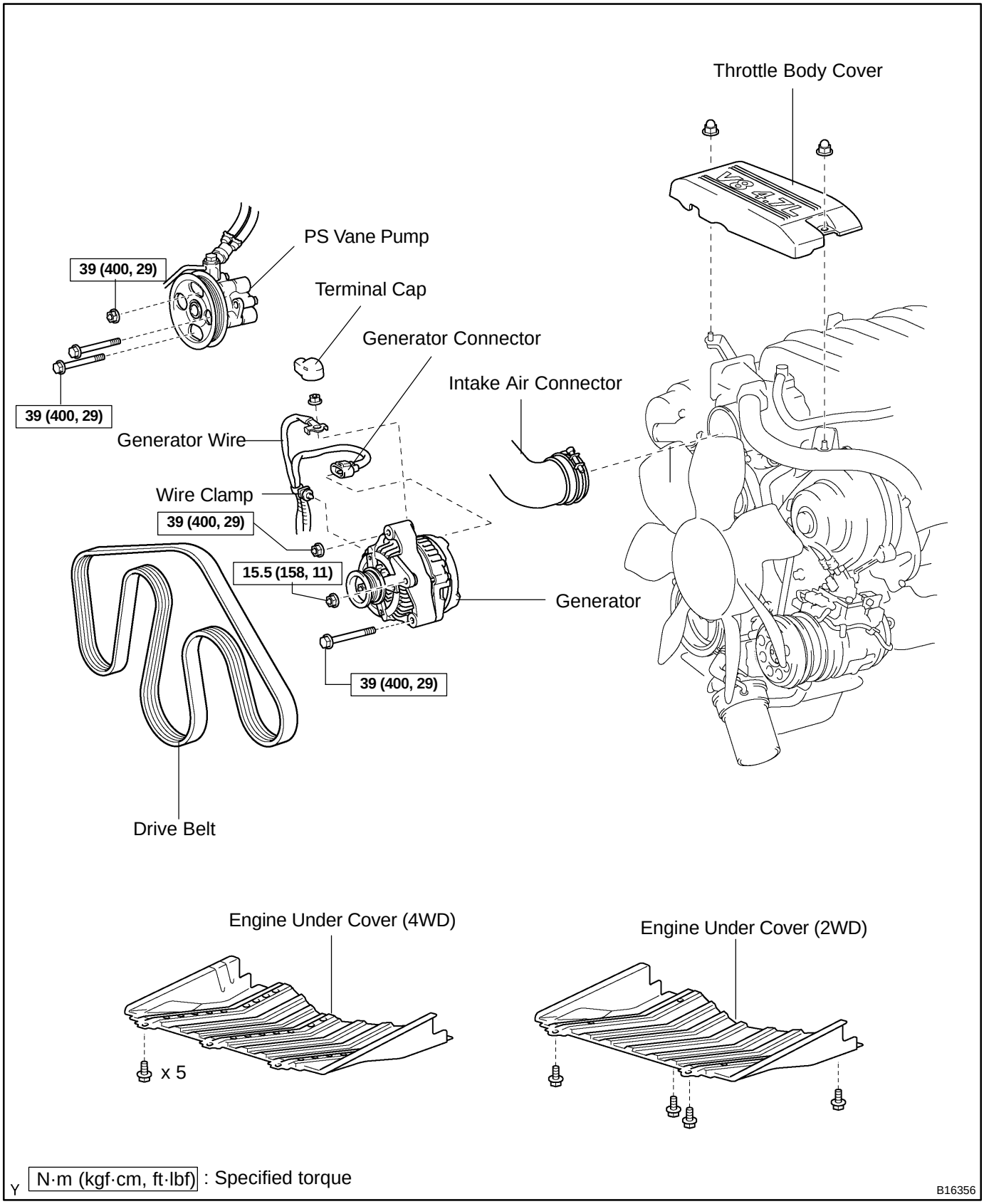

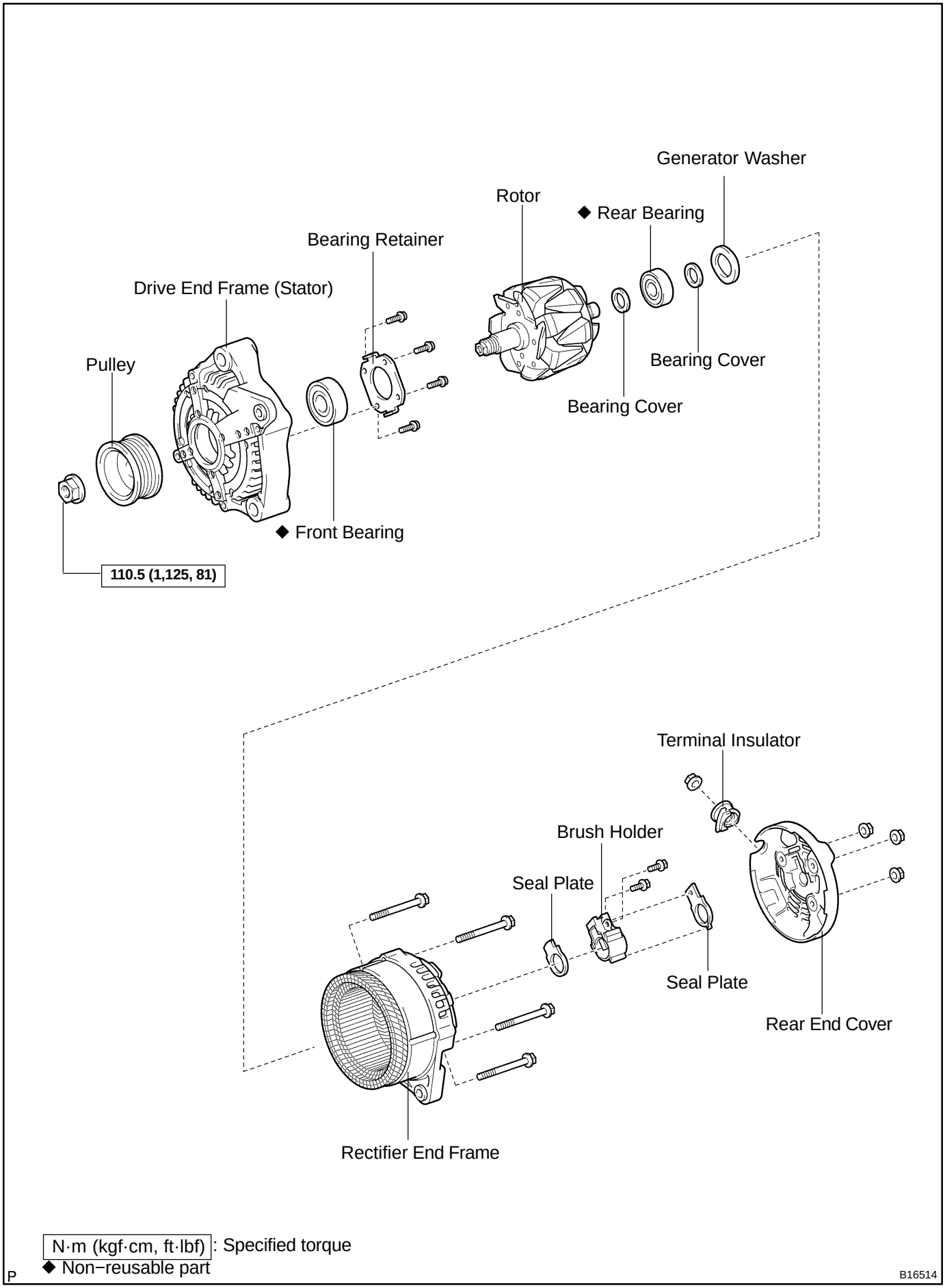
Generator Washer
Rotor
◆ Rear Bearing
Bearing Retainer
Drive End Frame (Stator)
Pulley
Bearing Cover
Bearing Cover
◆ Front Bearing
110.5 (1,125, 81)
Terminal Insulator
Brush Holder
Seal Plate
Seal Plate
Rear End Cover
Rectifier End Frame
N·m (kgf·cm, ft·lbf): Specified torque
◆ Non−reusable part
P
B16514

CH0LT−01

DISASSEMBLY

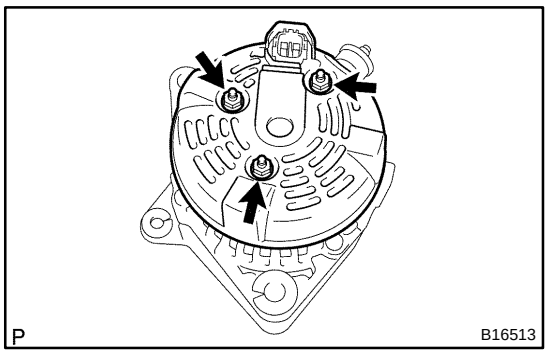

1. REMOVE REAR END COVER

(a) Remove the 3 nuts and end cover.

(b) Remove the terminal insulator.

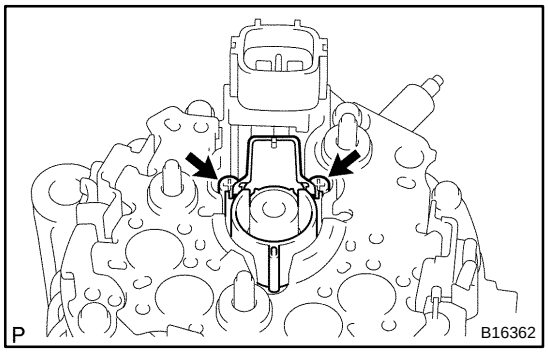

2. REMOVE BRUSH HOLDER

(a) Remove the rear seal plate from the brush holder.

(b) Remove the 2 screws and brush holder.

(c) Remove the front seal plate from the coil assembly.

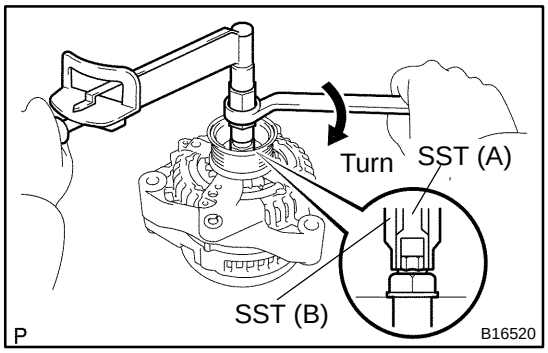

3. REMOVE PULLEY

(a) Hold SST (A) with a torque wrench, and tighten SST (B) clockwise to the specified torque.

SST 09820−63011

Torque: 39 N·m (400 kgf·cm, 29 ft·lbf)

(b) Check that SST (A) is secured to the rotor shaft.

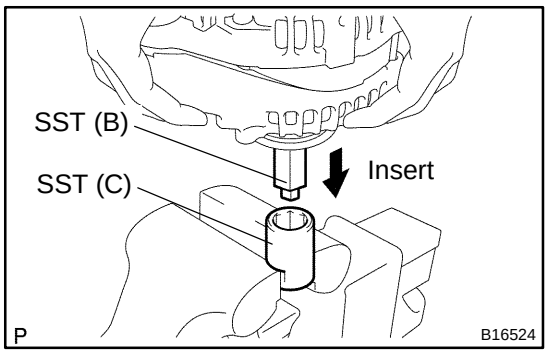

(c) Mount SST (C) in a vise.

(d) Insert SST (B) into SST (C), and attach the pulley nut to SST (C).

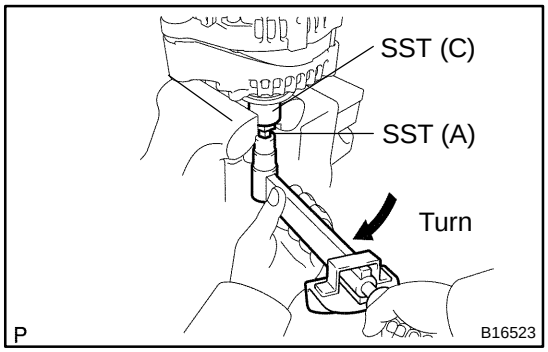

(e) To loosen the pulley nut, turn SST (A) in the direction shown in the illustration.

NOTICE:

To prevent damage to the rotor shaft, do not loosen the pulley nut more than one−half of a turn.

(f) Remove the generator from SST (C).

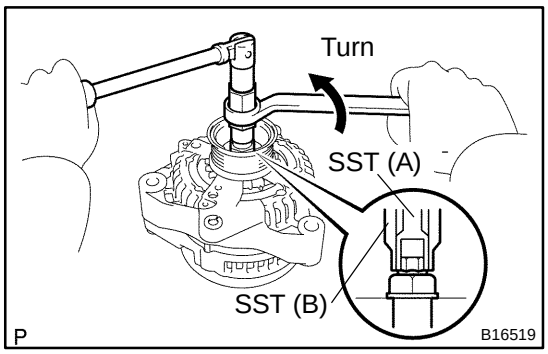

(g) Turn SST (B), and remove SST (A and B).
(h) Remove the pulley nut and pulley.

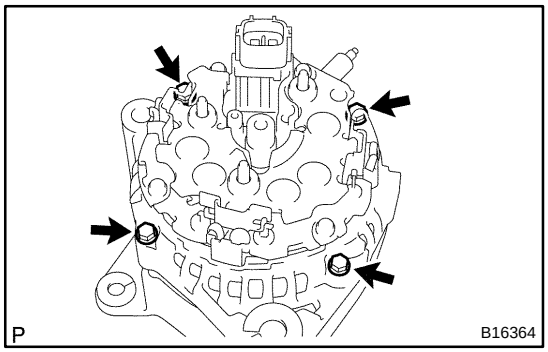

4. REMOVE COIL ASSEMBLY

(a) Remove the 4 bolts.

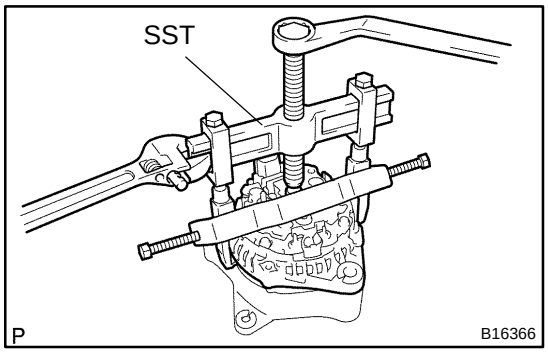

(b) Using SST, remove the coil assembly.
SST 09950−40011 (09951−04020, 09952−04010 09953−04020, 09954−04010, 09955−04071, 09957−04010, 09958−04011)
(c) Remove the generator washer.

5. REMOVE ROTOR FROM DRIVE END FRAME

CH0LU−02

INSPECTION

1. INSPECT ROTOR

(a) Check the rotor for open circuit.
Using an ohmmeter, check that there is continuity between the slip rings.
Standard resistance: 2.3 to 2.7 Ω at 20˚C (68˚F)

If there is no continuity, replace the rotor.

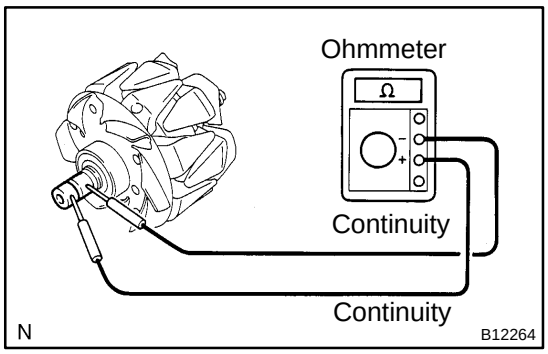

(b) Check the rotor for ground.
Using an ohmmeter, check that there is no continuity between the slip ring and rotor.

If there is continuity, replace the rotor.

(c) Check that the slip rings are not rough or scored.

If rough or scored, replace the rotor.

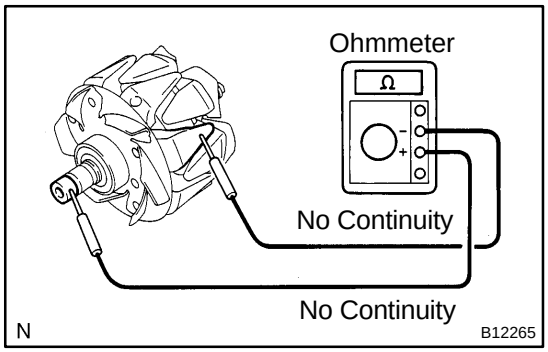

(d) Using vernier calipers, measure the slip ring diameter.
Standard diameter: 14.2 to 14.4 mm (0.559 to 0.567 in.)
Minimum diameter: 14.0 mm (0.551 in.)

If the diameter is less than minimum, replace the rotor.

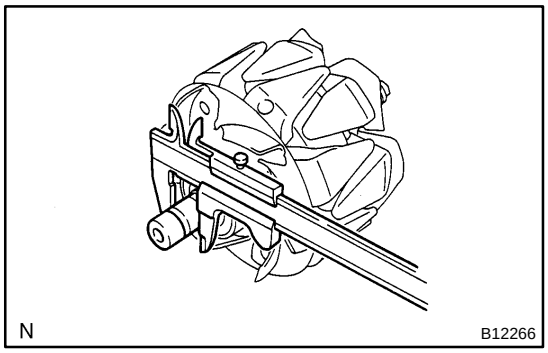

2. INSPECT BRUSHES

Using vernier caliper, measure the exposed brush length.
Standard exposed length: 10.5 mm (0.413 in.)
Minimum exposed length: 4.5 mm (0.177 in.)

If the exposed length is less than minimum, replace the brushes and brush holder assembly.

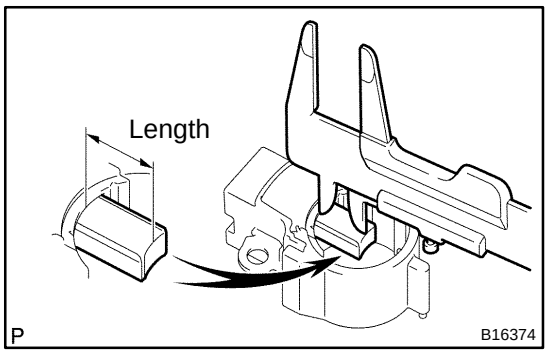

3. INSPECT BEARING

Check the bearing is not rough or worn.

If necessary, replace the bearing (See page CH−23).

CH0LX−02

INSTALLATION

1. INSTALL GENERATOR

(a) Install the generator with the bolt and 2 nuts.
Torque: 39 N·m (400 kgf·cm, 29 ft·lbf)

(b) Connect the generator connector.

(c) Connect the generator wire with the nut.

(d) Install the terminal cap.

(e) Install the wire clamp to the cord clip on the generator.

2. INSTALL PS VANE PUMP (See page SR−69)

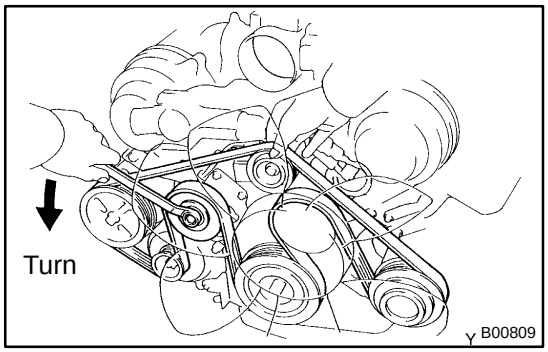

3. INSTALL DRIVE BELT

Install the belt by turning the belt tensioner counterclockwise.

HINT:

The pulley bolt for the belt tensioner has a left−hand thread.

4. CONNECT INTAKE AIR CONNECTOR TO THROTTLE BODY

5. PERFORM ON−VEHICLE INSPECTION (See page CH−1)

6. INSTALL THROTTLE BODY COVER

7. INSTALL ENGINE UNDER COVER

8. CONNECT CABLE TO NEGATIVE (−) BATTERY TERMINAL

CH0LW−01

REASSEMBLY

1. INSTALL ROTOR TO DRIVE END FRAME

(a) Place the drive end frame on the pulley.

(b) Install the rotor to the drive end frame.

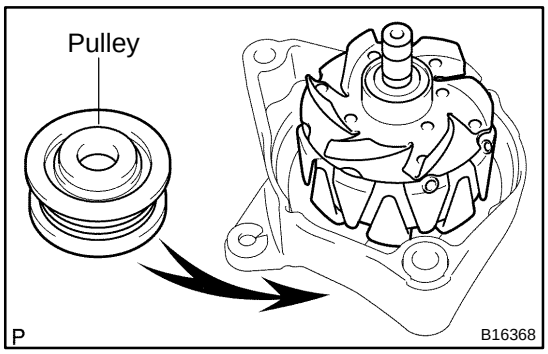

2. INSTALL COIL ASSEMBLY

(a) Place the generator washer on the rotor.

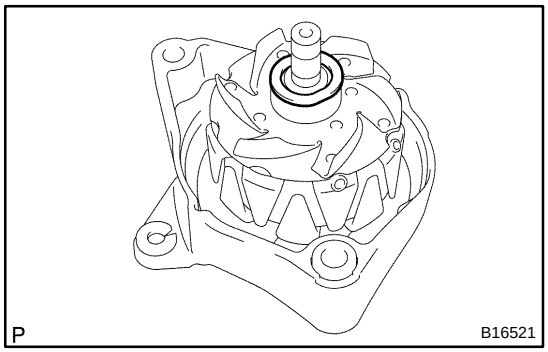

(b) Using SST and a press, slowly press in the coil assembly.
SST 09285−76010

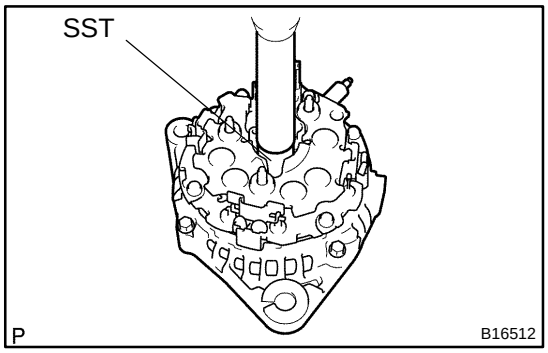

(c) Install the coil assembly with the 4 bolts.
Torque: 5.8 N·m (59 kgf·cm, 51 in.·lbf)

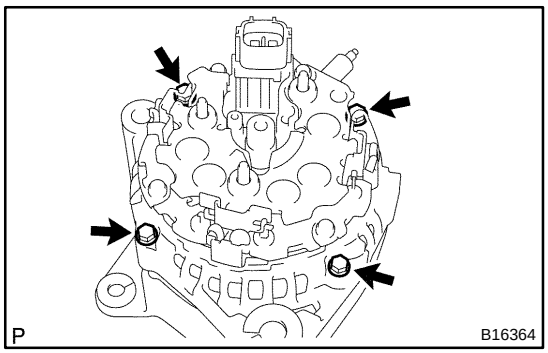

3. INSTALL PULLEY

(a) Install the pulley to the rotor shaft by tightening the pulley nut by hand.

(b) Hold SST (A) with a torque wrench, and tighten SST (B) clockwise to the specified torque.
SST 09820−63011
Torque: 39 N·m (400 kgf·cm, 29 ft·lbf)

(c) Check that SST (A) is secured to the pulley shaft.

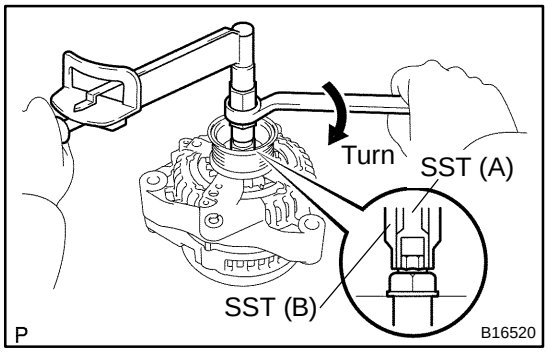

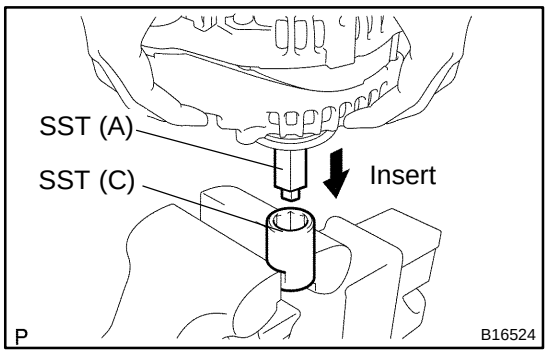

(d) Mount SST (C) in a vise.
(e) Insert SST (B) into SST (C), and attach the pulley nut to SST (C).

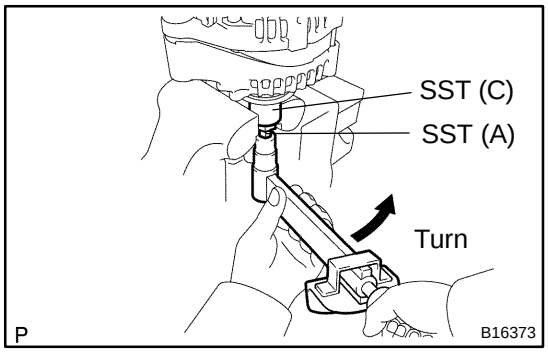

(f) To torque the pulley nut, turn SST (A) in the direction shown in the illustration.
Torque: 110.5 N·m (1,125 kgf·cm, 81 ft·lbf)
(g) Remove the generator from SST (C).

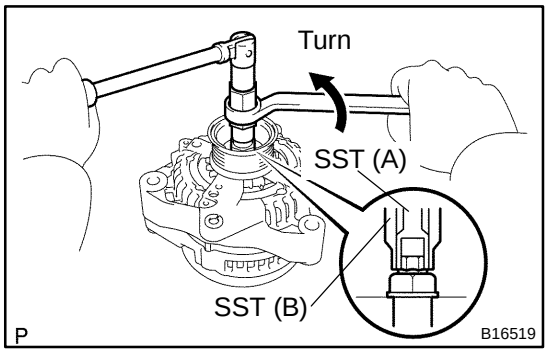

(h) Turn SST (B), and remove SST (A and B).

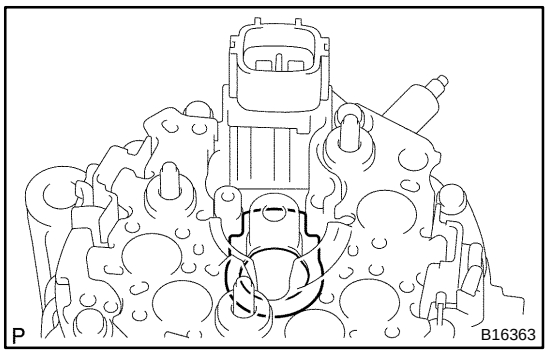

4. INSTALL BRUSH HOLDER
(a) Place the front seal plate on the coil assembly.

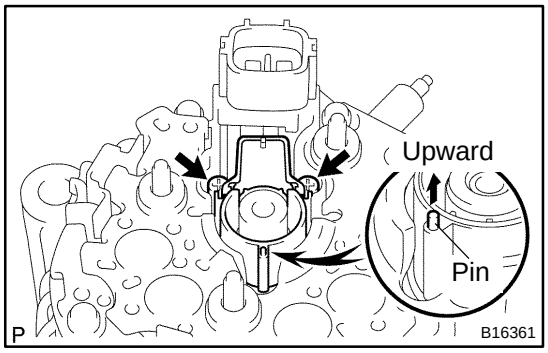

(b) Place the brush holder on the coil assembly with the pin facing upward.

NOTICE:
Be careful of the holder installation direction.

(c) Install the 2 screws.
Torque: 1.8 N·m (18 kgf·cm, 16 in.·lbf)

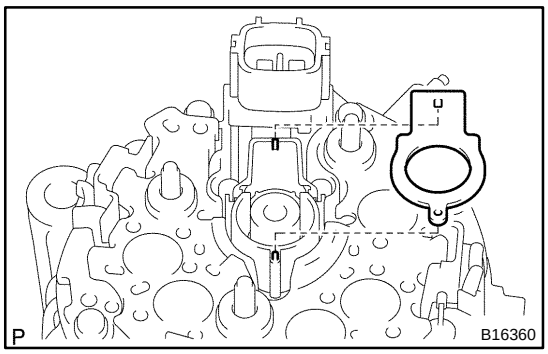

(d) Align the pins of the brush holder with the holes of the rear seal plate, and install the rear seal plate.

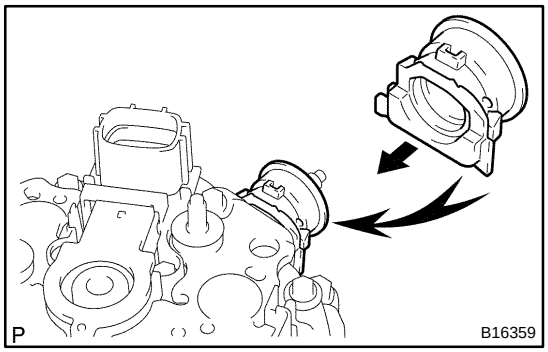

5. INSTALL REAR END COVER

(a) Install the terminal insulator.

NOTICE:

Be careful of the terminal insulator installation direction.

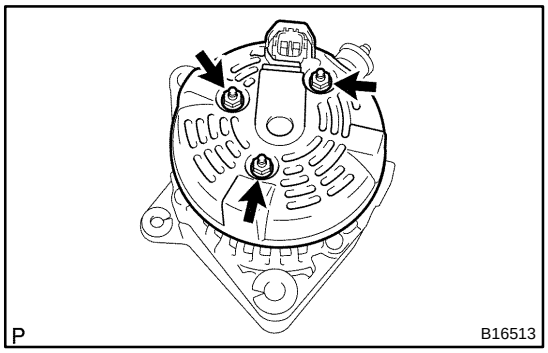

(b) Install the end cover with the 3 nuts.

Torque: 4.6 N·m (47 kgf·cm, 41 in.·lbf)

6. CHECK THAT ROTOR ROTATES SMOOTHLY

CH0LS−02

REMOVAL

1. REMOVE ENGINE UNDER COVER
2. REMOVE THROTTLE BODY COVER
3. DISCONNECT CABLE FROM NEGATIVE (−) BATTERY TERMINAL
4. DISCONNECT INTAKE AIR CONNECTOR FROM THROTTLE BODY

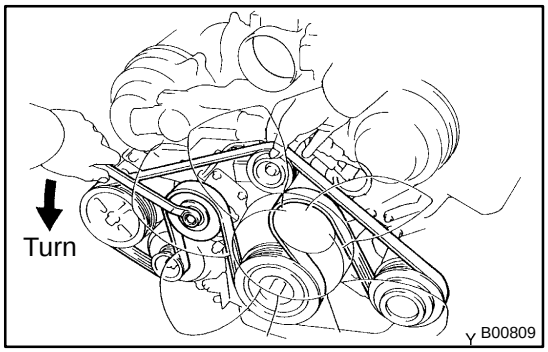

5. REMOVE GENERATOR DRIVE BELT

Loosen the belt tension by turning the belt tensioner counter-clockwise, and remove the drive belt.

HINT:

The pulley bolt for the belt tensioner has a left−hand thread.

6. REMOVE PS VANE PUMP FROM ENGINE
(See page SR−61)
7. REMOVE GENERATOR

(a) Disconnect the generator connector.
(b) Remove the terminal cap and nut, and disconnect the generator wire.
(c) Disconnect the wire clamp from the cord clip on the generator.
(d) Remove the bolt, 2 nuts and generator.

CH0LV−01

REPLACEMENT

1. REPLACE FRONT BEARING

(a) Remove the 4 screws, bearing retainer and bearing.

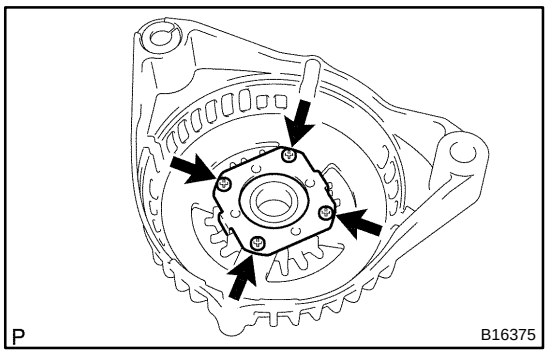

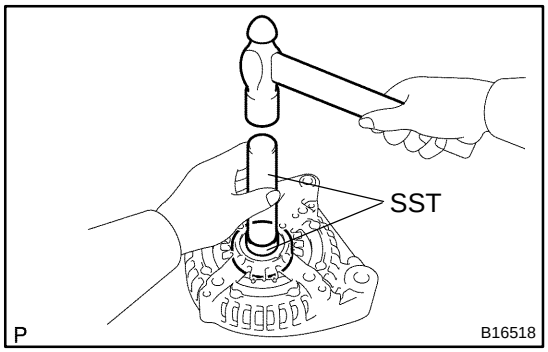

(b) Using SST and a hammer, tap out the bearing.
SST 09950−60010 (09951−00250), 09950−70010 (09951−07100)

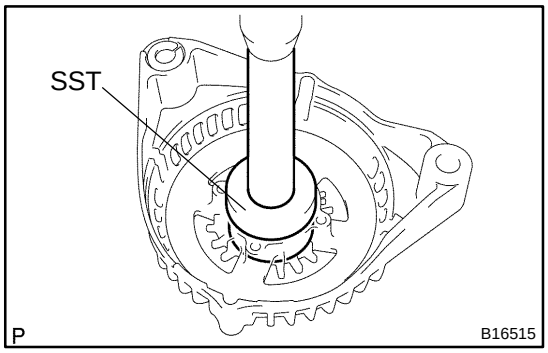

(c) Using SST and a press, press in a new bearing.
SST 09950−60010 (09951−00470), 09950−70010 (09951−07100)

(d) Install the bearing retainer with the 4 screws.
Torque: 2.6 N·m (27 kgf·cm, 23 in.·lbf)

2. REPLACE REAR BEARING

(a) Using SST, remove the bearing cover (outside) and bearing.
SST 09820−00021

NOTICE:
Be careful not to damage the fan.

(b) Remove the bearing cover (inside).

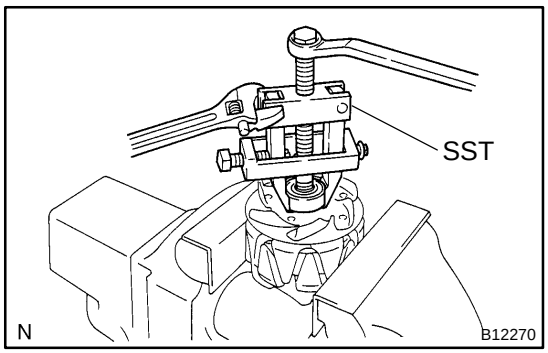

(c) Place the bearing cover (inside) on the rotor.

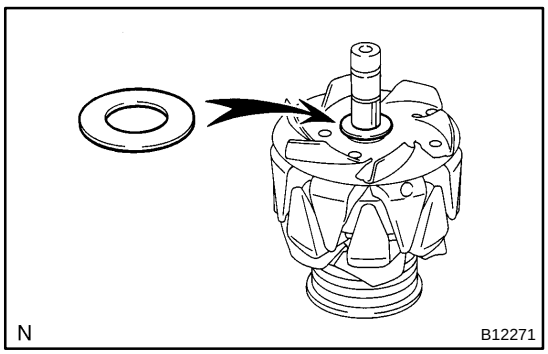

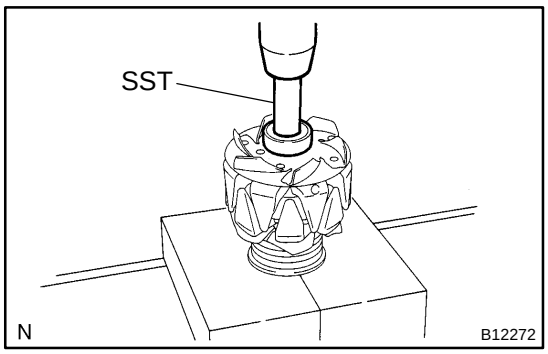

(d) Using SST and a press, press in a new bearing.
SST 09820−00031

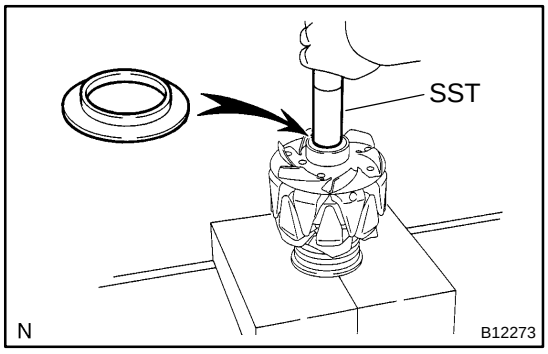

(e) Using SST, push in the bearing cover (outside).
SST 09285−76010

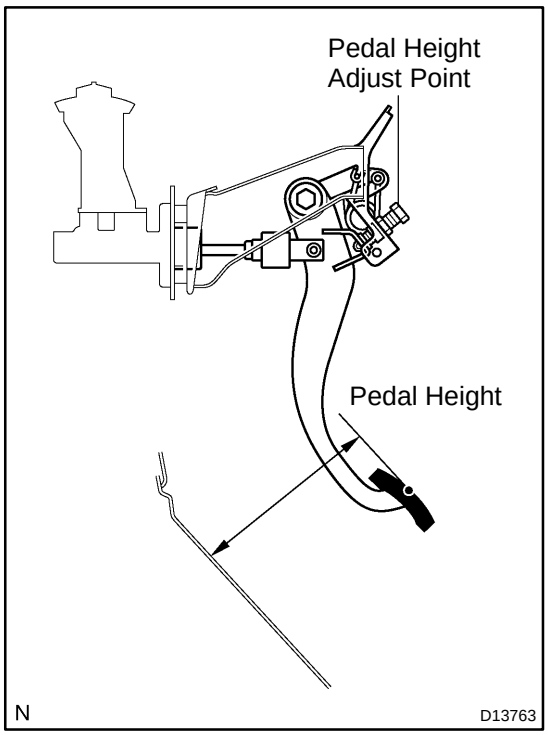

CLUTCH PEDAL

CL0ER−01

INSPECTION

1. CHECK THAT PEDAL HEIGHT IS CORRECT

Pedal height from dash panel:
170.2 to 180.2 mm (6.701 to 7.095 in.)
Pedal height from dash insulator:
157.7 to 167.7 mm (6.209 to 6.602 in.)

2. IF NECESSARY, ADJUST PEDAL HEIGHT

(a) Loosen the lock nut and turn the stopper bolt or clutch start switch until the correct height is obtained.

(b) Tighten the lock nut.

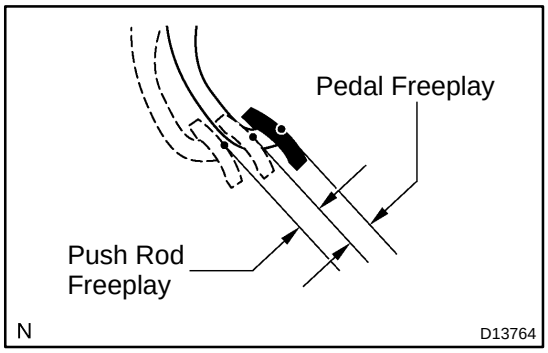

3. CHECK THAT PEDAL FREEPLAY AND PUSH ROD PLAY ARE CORRECT

(a) Depress the pedal until clutch resistance begins to be felt.
Pedal freeplay: 5.0 to 15.0 mm (0.197 to 0.591 in.)

(b) Gently push on the pedal until the resistance begins to increase a little.
Push rod play at pedal top:
1.0 to 5.0 mm (0.039 to 0.197 in.)

4. IF NECESSARY, ADJUST PEDAL FREEPLAY AND PUSH ROD PLAY

(a) Remove the lower finish panel and disconnect the air duct.

(b) Loosen the lock nut and turn the push rod until correct freeplay and push rod play are obtained.

(c) Tighten the lock nut.

(d) After adjusting the pedal freeplay, check the pedal height.

(e) Connect the air duct and install the lower finish panel.

5. CHECK CLUTCH RELEASE POINT

(a) Pull the parking brake lever and install wheel stoppers.

(b) Start the engine and run at idle.

(c) Without depressing the clutch pedal, slowly move the shift lever into the reverse position until the gears contact.

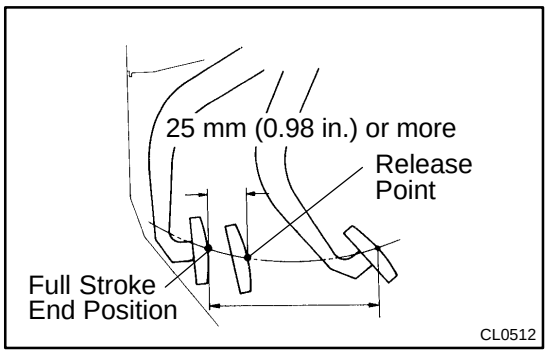

(d) Gradually depress the clutch pedal and measure the stroke from where the gear noise stops (release point) up to the full stroke end position.

Standard distance:

25 mm (0.98 in.) or more

(From pedal stroke end position to release point)

If the distance is not as specified, perform the following operations.

- Check pedal height.
- Check push rod play and pedal freeplay.
- Bleed clutch line.
- Check clutch cover and disc.

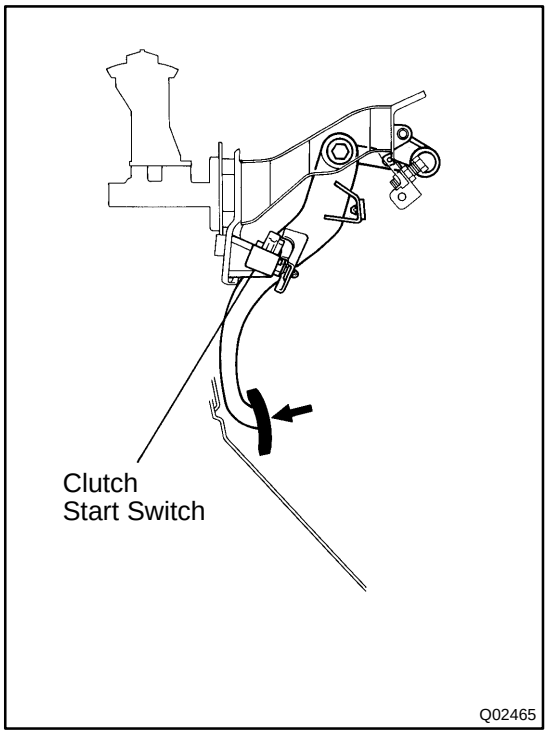

6. CHECK CLUTCH START SYSTEM

(a) Check that the engine does not start when the clutch pedal is released.

(b) Check that the engine starts when the clutch pedal is fully depressed.

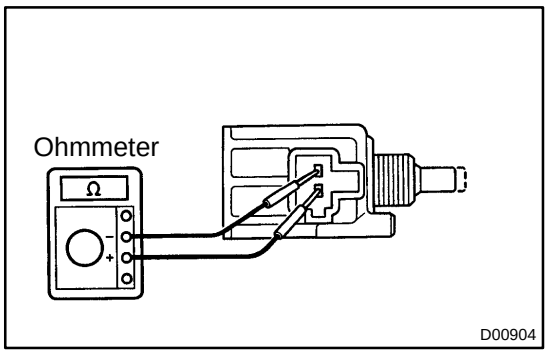

7. CHECK CONTINUITY OF CLUTCH START SWITCH

(a) Disconnect the connector.

(b) Remove the nut and clutch start switch from the clutch pedal bracket.

(c) Measure the resistance between the terminals when the switch is ON and when it is OFF.

Standard:

Switch position	Condition
ON (pushed)	Below 1 Ω
OFF (free)	10 kΩ or higher

If the result is not as specified, replace the switch.

(d) Install the clutch start switch to the clutch pedal bracket with the nut.

(e) Connect the connector.

CLUTCH UNIT

COMPONENTS

CL02I−05

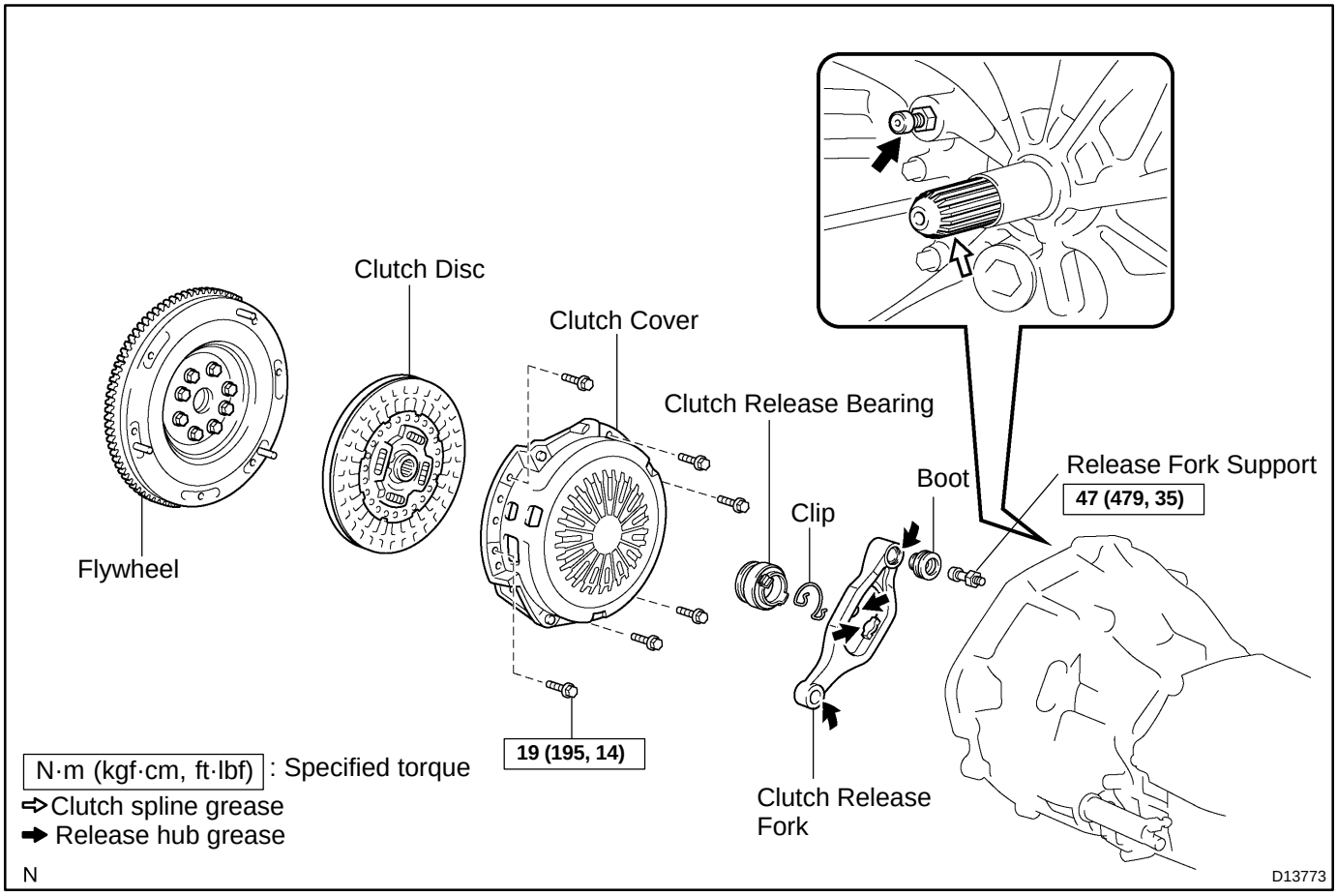

CL0EU−01

INSPECTION

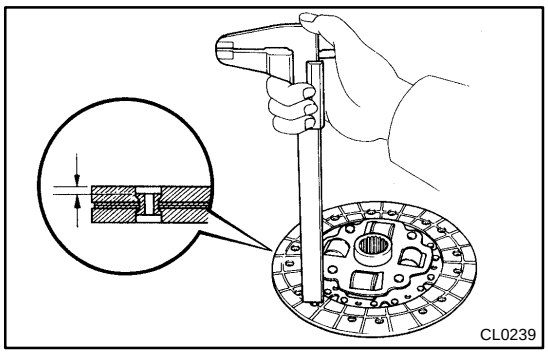

1. INSPECT CLUTCH DISC FOR WEAR OR DAMAGE

Using calipers, measure the rivet head depth.

Minimum rivet depth: 0.3 mm (0.012 in.)

If necessary, replace the clutch disc.

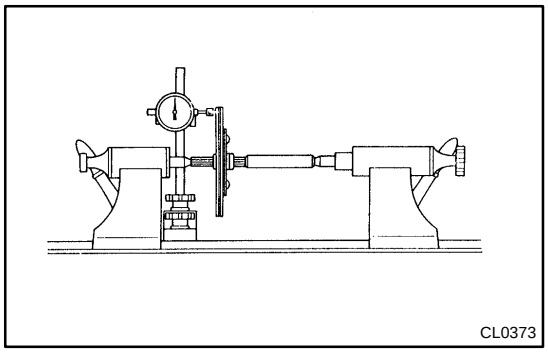

2. INSPECT CLUTCH DISC RUNOUT

Using a dial indicator, check the disc runout.

Maximum runout: 0.7 mm (0.027 in.)

If necessary, replace the clutch disc.

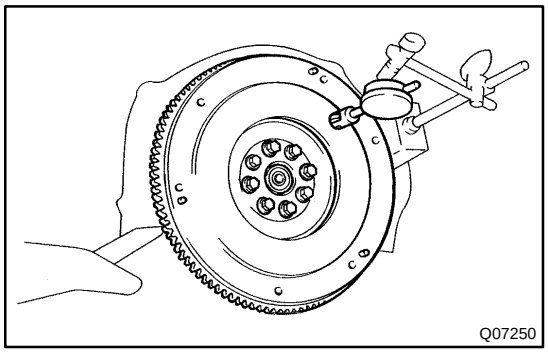

3. INSPECT FLYWHEEL RUNOUT

Using a dial indicator with a roller instrument, check the flywheel runout.

Maximum runout: 0.1 mm (0.004 in.)

If necessary, replace the flywheel.

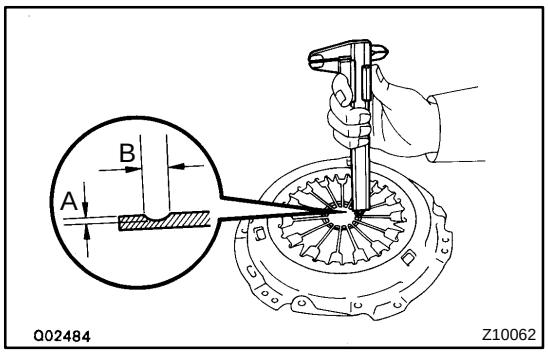

4. INSPECT DIAPHRAGM SPRING FOR WEAR

Using calipers, measure the diaphragm spring for depth and width of wear.

Maximum

Depth A: 0.5 mm (0.020 in.)

Width B: 6.0 mm (0.236 in.)

If necessary, replace the clutch cover.

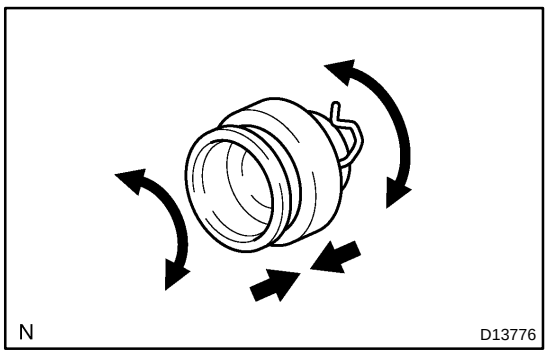

5. INSPECT CLUTCH RELEASE BEARING

Turn the bearing by hand while applying force in the axial direction.

HINT:

The bearing is permanently lubricated and requires no cleaning or lubrication.

If necessary, replace the release bearing.

CL02L−03

INSTALLATION

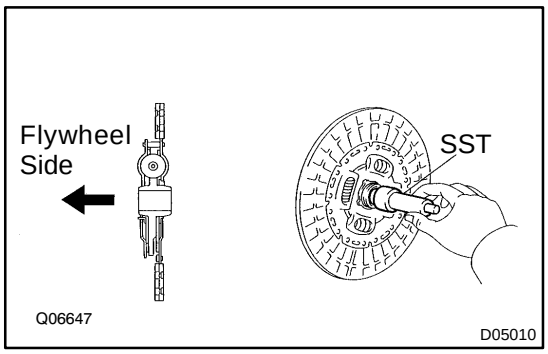

1. INSTALL CLUTCH DISC AND CLUTCH COVER ON FLYWHEEL

(a) Insert SST in the clutch disc, then insert them in the flywheel.

SST 09301−00110

HINT:

Take care not to insert the clutch disc in the wrong direction.

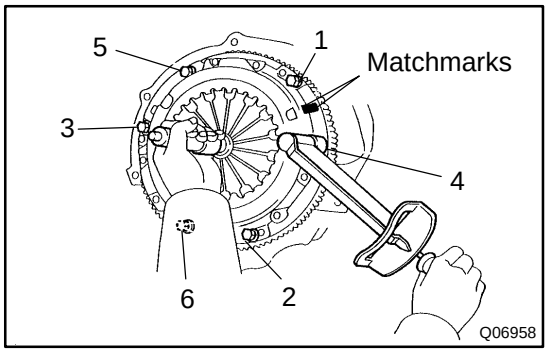

(b) Align the matchmarks on the clutch cover and flywheel.

(c) Following the order shown in the illustration, tighten the 6 bolts starting from the bolt located near the knock pin on the top.

Torque: 19 N·m (195 kgf·cm, 14 ft·lbf)

HINT:

- Following the order shown in the illustration, tighten the bolts at a time evenly.
- Check that the disc is in the center by lightly moving SST up and down, right and left, and tighten the bolts.

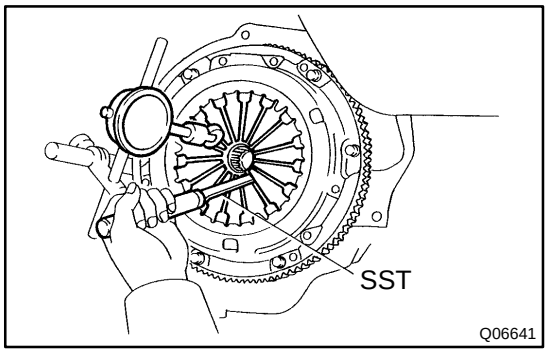

2. CHECK DIAPHRAGM SPRING TIP ALIGNMENT

Using a dial indicator with a roller instrument, check the diaphragm spring tip alignment.

Maximum non−alignment: 0.5 mm (0.020 in.)

If alignment is not as specified, adjust the diaphragm spring tip alignment using SST.

SST 09333−00013

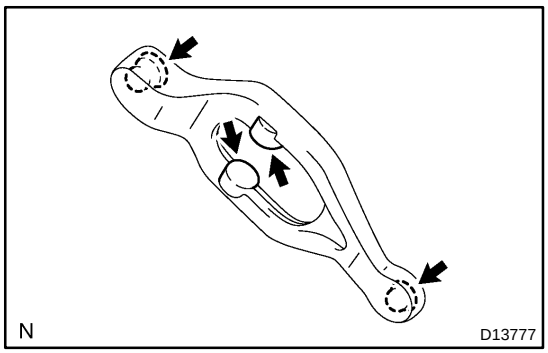

3. APPLY RELEASE HUB GREASE

Apply release hub grease to the release fork and clutch release bearing contact, push rod contact and release fork pivot contact.

Sealant:

Part No. 08887−01806, RELEASE HUB GREASE or equivalent

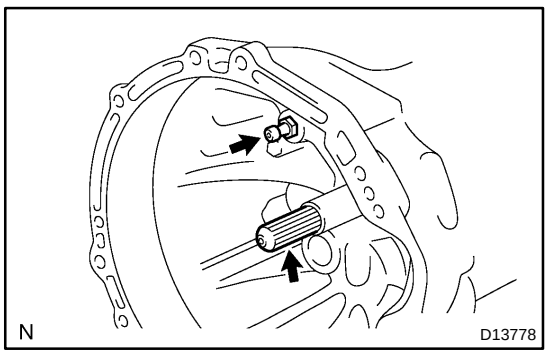

4. APPLY CLUTCH SPRING GREASE

Apply clutch spline grease to the input shaft spline.

Sealant:

Part No. 08887−01706, CLUTCH SPLINE GREASE or equivalent

5. INSTALL BOOT, CLUTCH RELEASE BEARING AND CLUTCH RELEASE FORK TO TRANSMISSION

(a) Install the clip to the release bearing.

(b) Install the boot and release bearing to the release fork, and then install them to the transmission.

6. INSTALL TRANSMISSION TO ENGINE
(See page MT−3)

CL02J−03

REMOVAL

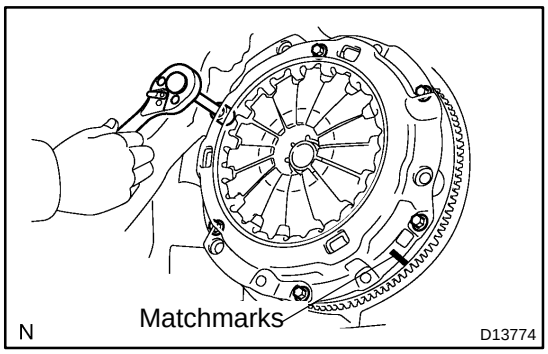

1. REMOVE TRANSMISSION FROM ENGINE
(See page MT−3)

2. REMOVE CLUTCH COVER AND CLUTCH DISC

(a) Put matchmarks on the flywheel and clutch cover.

(b) Loosen each set bolt one turn at a time until spring tension is released.

(c) Remove the set bolts, and pull off the clutch cover with the clutch disc.

NOTICE:
Do not drop the clutch disc.

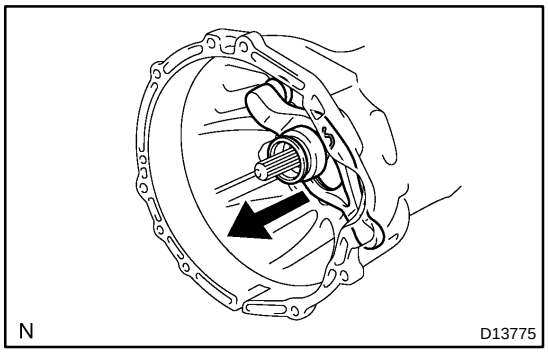

3. REMOVE BOOT, CLUTCH RELEASE BEARING AND CLUTCH RELEASE FORK FROM TRANSMISSION

(a) Remove the boot and release bearing together with the fork.

(b) Remove the clip from the release bearing.

CLUTCH MASTER CYLINDER

CL028−04

COMPONENTS

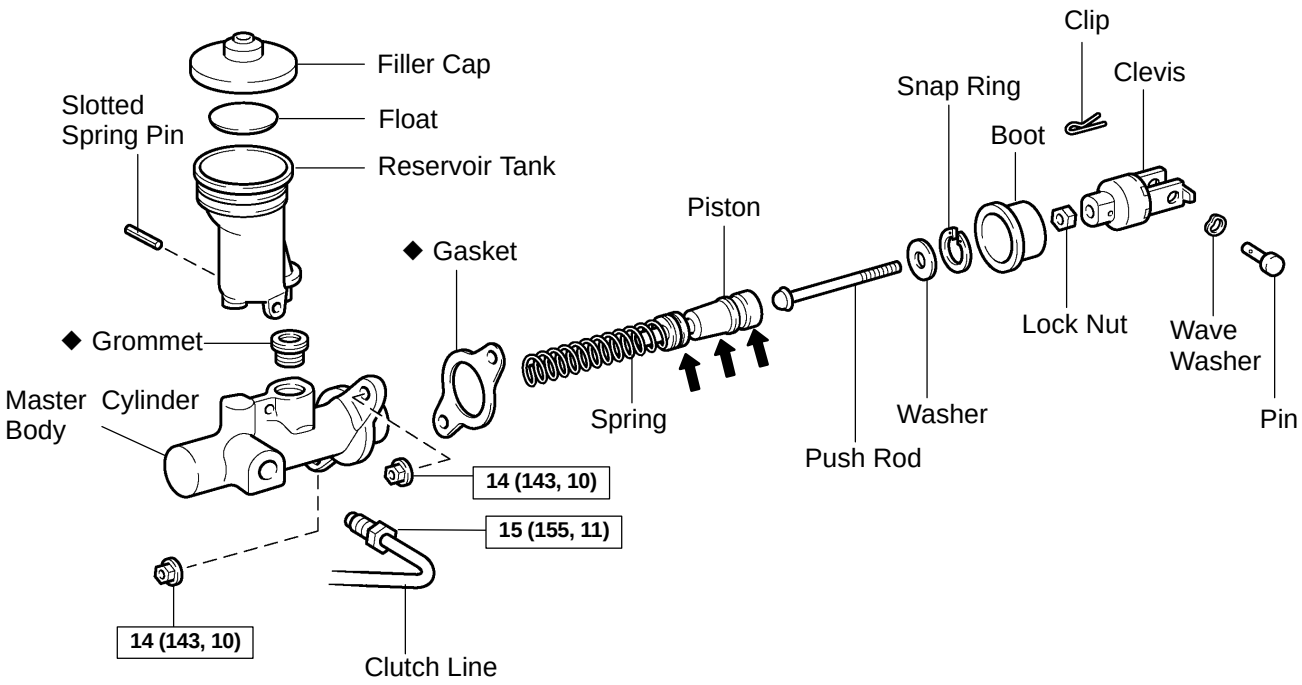

N·m (kgf·cm, ft·lbf) : Specified torque

◆ Non−reusable part

N ⬅ Lithum soap base glycol grease

D04401

CL02A−03

DISASSEMBLY

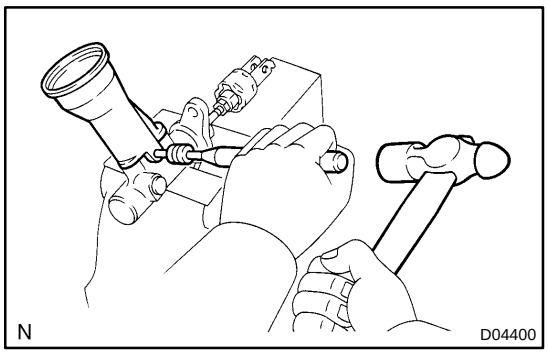

1. REMOVE RESERVOIR TANK

(a) Using a pin punch and hammer, drive out the slotted spring pin.

(b) Remove the reservoir and grommet.

2. REMOVE CLEVIS AND BOOT

(a) Loosen the lock nut to remove the clevis and remove the lock nut.

(b) Remove the boot.

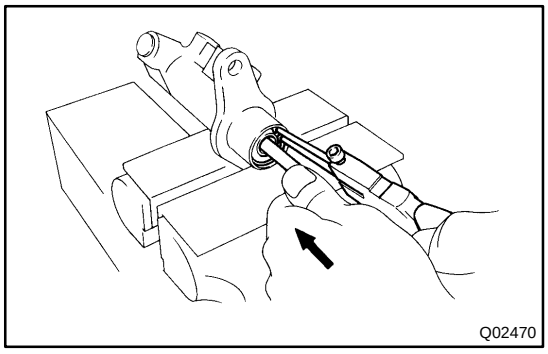

3. REMOVE PUSH ROD

(a) While pushing the push rod, remove the snap ring using snap ring pliers.

(b) Remove the push rod and washer.

4. REMOVE PISTON WITH SPRING

CL084−02

INSTALLATION

1. INSTALL NEW GASKET

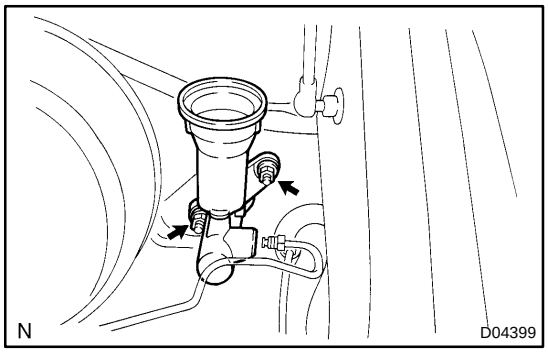

2. INSTALL MASTER CYLINDER WITH 2 MOUNTING NUTS

Torque: 14 N·m (143 kgf·cm, 10 ft·lbf)

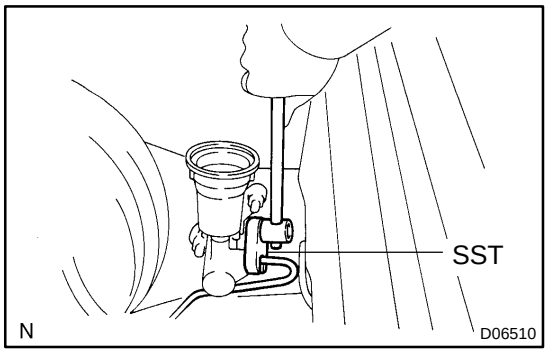

3. CONNECT CLUTCH LINE TO MASTER CYLINDER

Using SST, connect the clutch line.

SST 09023−00101

Torque: 15 N·m (155 kgf·cm, 11 ft·lbf)

4. INSTALL CLEVIS PIN, WAVE WASHER AND CLIP

5. FILL CLUTCH RESERVOIR WITH BRAKE FLUID AND BLEED CLUTCH SYSTEM

6. ADJUST CLUTCH PEDAL (See page CL−2)

7. CHECK FOR LEAKS

CL083−03

REASSEMBLY

1. COAT PARTS WITH LITHIUM SOAP BASE GLYCOL GREASE, AS SHOWN

2. INSERT PISTON WITH SPRING INTO CYLINDER

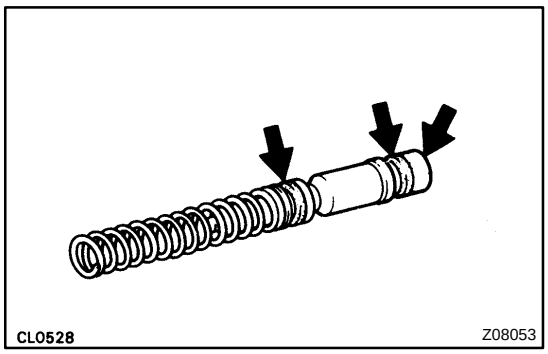

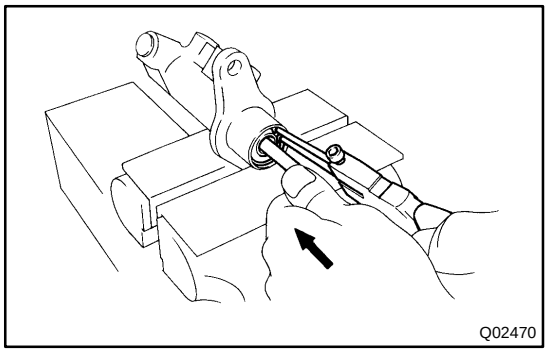

3. INSTALL PUSH ROD AND BOOT

(a) Install the washer to the push rod.

(b) Push the push rod into the piston, and install the snap ring using snap ring pliers.

(c) Install the boot.

4. TEMPORARILY INSTALL LOCK NUT AND CLEVIS

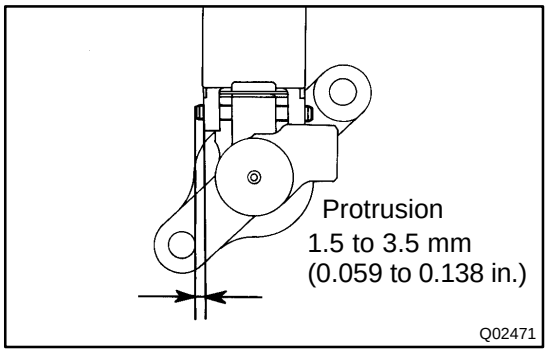

5. INSTALL RESERVOIR

(a) Install the reservoir and a new grommet.

(b) Using a pin punch and hammer, drive in the slotted spring pin.

CL082−02

REMOVAL

1. REMOVE FILLER CAP AND FLOAT FROM RESERVOIR

2. DRAW OUT BRAKE FLUID WITH SYRINGE

NOTICE:

Do not let brake fluid remain on a painted surface. If brake fluid spill onto a painted surface, wash it off immediately.

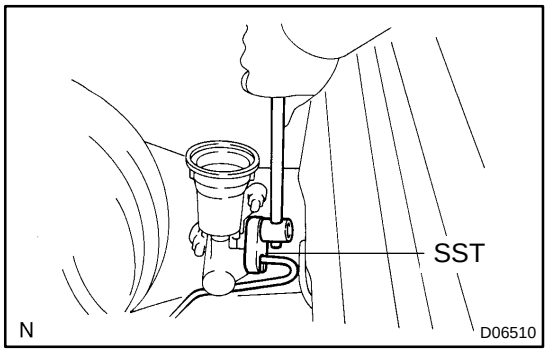

3. DISCONNECT CLUTCH LINE FROM MASTER CYLINDER

Using SST, disconnect the clutch line. Use a container to catch the fluid.

SST 09023−00101

4. REMOVE CLIP AND CLEVIS PIN

(a) Using needle−nose pliers, remove the clip.

(b) Remove the clevis pin and wave washer.

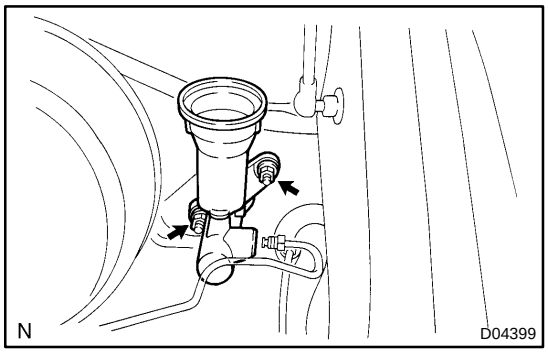

5. REMOVE 2 MOUNTING NUTS AND PULL OUT MASTER CYLINDER

6. REMOVE GASKET

CLUTCH RELEASE CYLINDER

CL02D−04

COMPONENTS

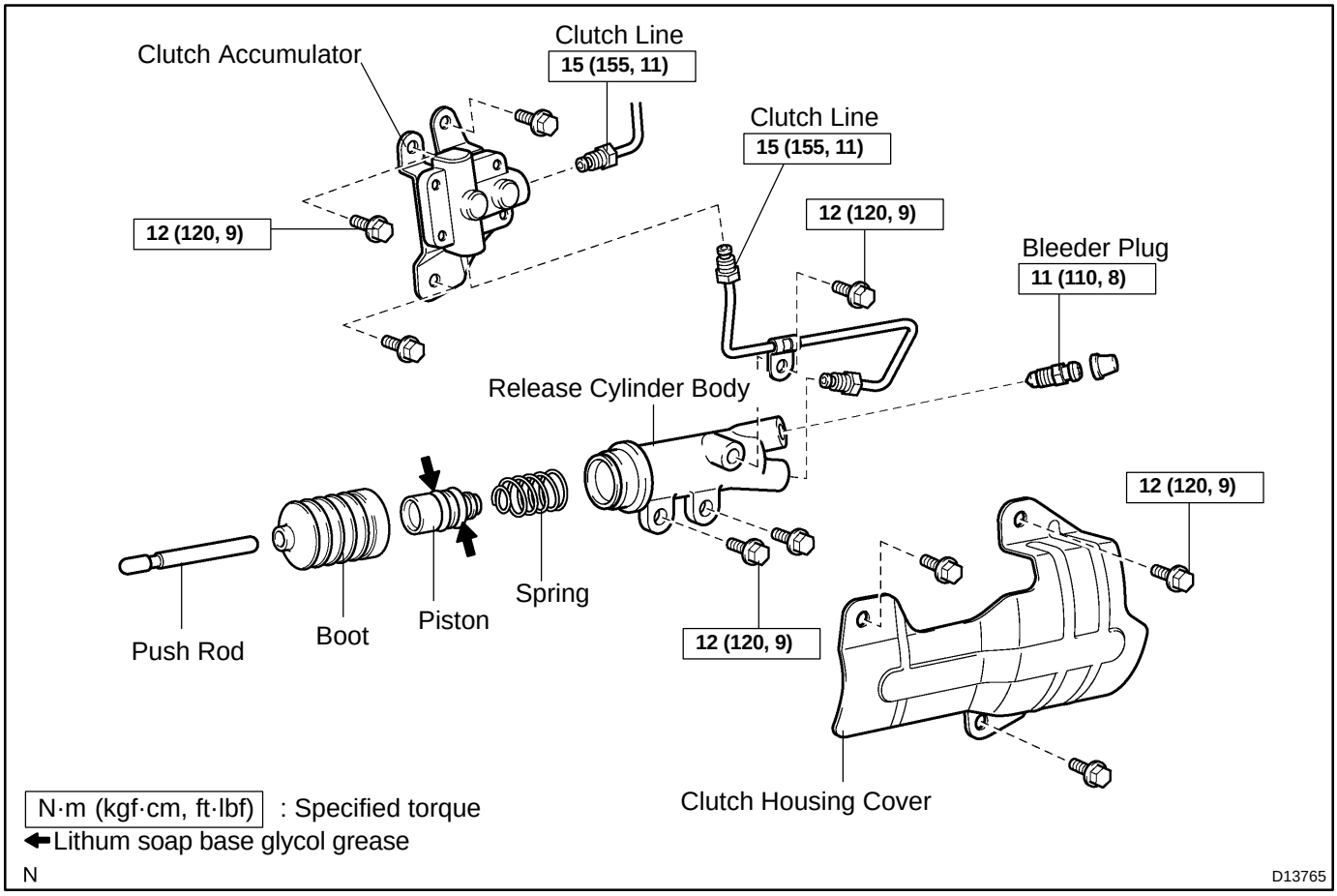

CL02F−11

DISASSEMBLY

1. REMOVE BOOT AND PUSH ROD

(a) Pull out the boot with the push rod.

(b) Remove the boot from the push rod.

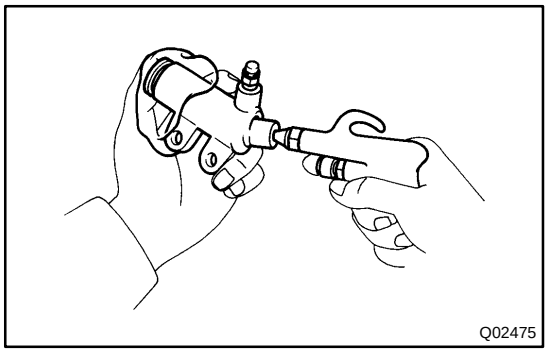

2. REMOVE PISTON AND SPRING

Using compressed air, remove the piston with the spring from the cylinder.

NOTICE:

- **Blowing off the air may cause the piston to jump out. When removing the piston, hold it by hand using a waste.**
- **Take care not to splash brake fluid when air−blowing.**

3. REMOVE BLEEDER PLUG

CL0ET−01

INSTALLATION

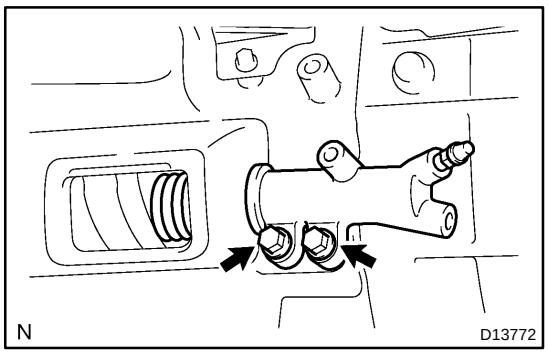

1. INSTALL CLUTCH RELEASE CYLINDER

Install the clutch release cylinder with the 2 bolts.

Torque: 12 N·m (120 kgf·cm, 9 ft·lbf)

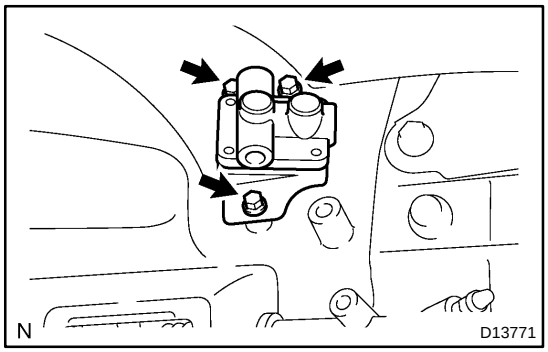

2. INSTALL CLUTCH ACCUMULATOR

(a) Install the clutch accumulator with the 3 bolts.

Torque: 12 N·m (120 kgf·cm, 9 ft·lbf)

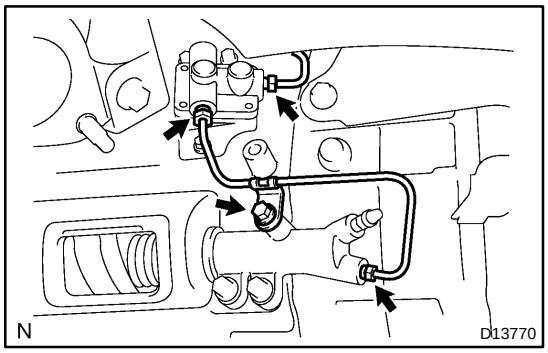

(b) Using SST, connect the clutch lines to the clutch release cylinder and clutch accumulator.

SST 09023−00101

Torque: 15 N·m (155 kgf·cm, 11 ft·lbf)

(c) Install the clamp with the bolt.

Torque: 12 N·m (120 kgf·cm, 9 ft·lbf)

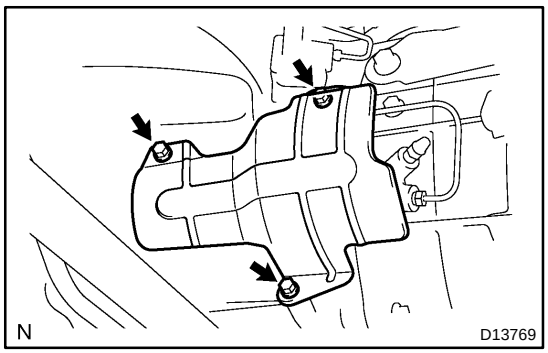

3. INSTALL CLUTCH HOUSING COVER

Install the clutch housing cover with the 3 bolts.

Torque: 12 N·m (120 kgf·cm, 9 ft·lbf)

4. FILL CLUTCH RESERVOIR WITH BRAKE FLUID AND BLEED CLUTCH SYSTEM

5. CHECK FOR LEAKS

CL02G−11

REASSEMBLY

1. INSTALL BLEEDER PLUG
Torque: 11 N·m (110 kgf·cm, 8 ft·lbf)

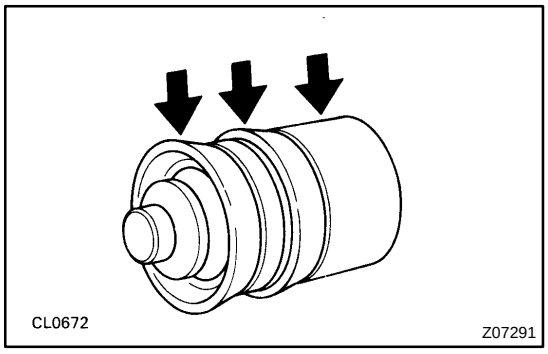

2. COAT PISTON WITH LITHIUM SOAP BASE GLYCOL GREASE, AS SHOWN

3. INSTALL PISTON AND SPRING INTO CYLINDER

4. INSTALL BOOT AND PUSH ROD

(a) Install the push rod to the boot.

(b) Install the boot with the push rod to the cylinder.

CL0ES−01

REMOVAL

1. REMOVE FILLER CAP AND FLOAT FROM RESERVOIR

2. DRAW OUT BRAKE FLUID WITH SYRINGE

NOTICE:

Do not let brake fluid remain on a painted surface. If brake fluid spill onto a painted surface, wash it off immediately.

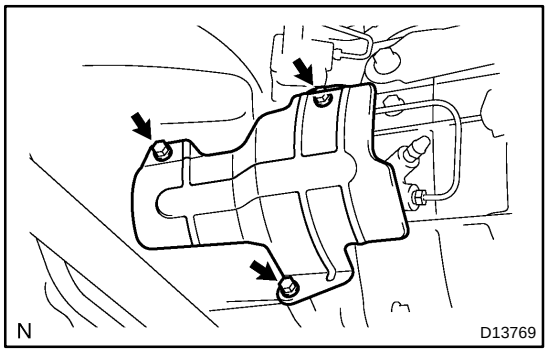

3. REMOVE CLUTCH HOUSING COVER

Remove the 3 bolts and clutch housing cover.

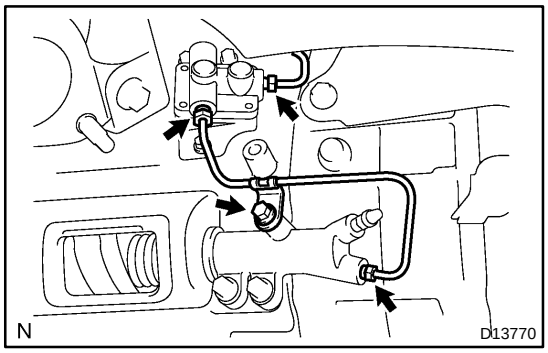

4. REMOVE CLUTCH ACCUMULATOR

(a) Remove the bolt and clamp.

(b) Using SST, disconnect the clutch lines from the clutch accumulator and clutch release cylinder. Use a container to catch the fluid.

SST 09023−00101

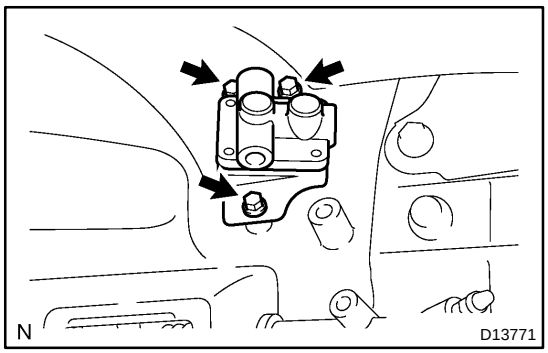

(c) Remove the 3 bolts and clutch accumulator.

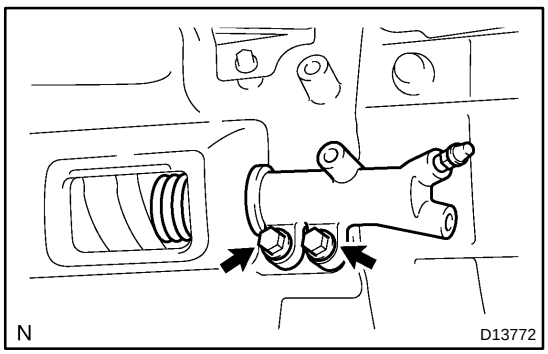

5. REMOVE CLUTCH RELEASE CYLINDER

Remove the 2 bolts and clutch release cylinder.

TROUBLESHOOTING

CL026−03

PROBLEM SYMPTOMS TABLE

Use the table below to help you find the cause of the problem. The numbers indicate the priority of the likely cause of the problem. Check each part in order. If necessary, replace these parts.

Symptom	Suspected Area	See page
Clutch grabs/chatters	1. Engine mounting (Loose) 2. Clutch disc (Runout is excessive) 3. Clutch disc (Oily) 4. Clutch disc (Worn out) 5. Clutch disc (Damaged torsion rubber) 6. Clutch disc (Glazed) 7. Diaphragm spring (Out of tip alignment)	− CL−17 CL−15 CL−15 CL−17 CL−15 CL−18
Clutch pedal is spongy	1. Clutch line (Air in line) 2. Master cylinder piston cup (Damaged) 3. Release cylinder piston cup (Damaged)	− CL−5 CL−10
Clutch is noisy	1. Release bearing (Worn, dirty or damaged) 2. Input shaft bearing (Worn, dirty or damaged) 3. Clutch disc (Damaged torsion rubber)	CL−17 − CL−15
Clutch slips	1. Clutch pedal (Freeplay out of adjustment) 2. Clutch disc (Oily) 3. Clutch disc (Worn out) 4. Diaphragm spring (Damaged) 5. Pressure plate (Distortion) 6. Flywheel (Distortion)	CL−2 CL−18 CL−17 CL−17 CL−17 −
Clutch does not disengage	1. Clutch pedal (Freeplay out of adjustment) 2. Clutch line (Air in line) 3. Master cylinder piston cup (Damaged) 4. Release cylinder piston cup (Damaged) 5. Input shaft bearing (Worn, dirty or damaged) 6. Clutch disc (Out of true) 7. Clutch disc (Runout is excessive) 8. Clutch disc (Lining broken) 9. Clutch disc (Dirty or burred) 10.Clutch disc (Oily) 11.Clutch disc (Lack of spline grease) 12.Diaphragm spring (Damaged) 13.Diaphragm spring (Out of tip alignment) 14.Pressure plate (Distortion)	CL−2 − CL−5 CL−10 − CL−17 CL−15 CL−17 CL−17 CL−17 CL−18 CL−17 CL−18 CL−17
Clutch start system malfunction	1. Clutch start switch	CL−2

COOLANT

CO1D4−01

INSPECTION

HINT:

Check the coolant level when the engine is cold.

1. CHECK ENGINE COOLANT LEVEL AT RADIATOR RESERVOIR

The engine coolant level should be between the ”LOW” and ”FULL” lines at normal temperature (20˚C(68˚F)).

If low, check for leaks and add ”Toyota Super Long Life Coolant” or similar high quality ethylene glycol based non−silicate, non−amine, non−nitrite, and non−borate coolant with long−life hybrid organic acid technology up to the ”FULL” line.

2. CHECK ENGINE COOLANT QUALITY

(a) Remove the radiator cap.

CAUTION:

To avoid the danger of being burned, do not remove the radiator cap while the engine and radiator are still hot, as fluid and steam can be blown out under pressure.

(b) There should not be any excessive deposits of rust or scale around the radiator cap or radiator filler hole, and the coolant should be free from oil.

If excessively dirty, clean the coolant passages and replace the coolant.

(c) Reinstall the radiator cap.

CO1D5−01

REPLACEMENT

CAUTION:

To avoid the danger of being burned, do not remove the radiator cap while the engine and radiator are still hot as fluid and steam can be blown out under pressure.

1. REMOVE ENGINE UNDER COVER

2. DRAIN ENGINE COOLANT

(a) Remove the radiator cap.

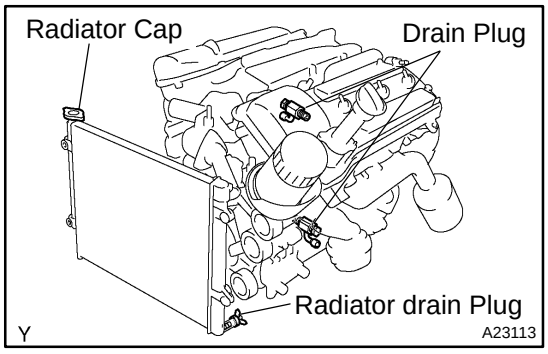

(b) Remove the 3 drain plugs on the engine and radiator, and drain the coolant.

(c) Close the 3 drain plugs.

Torque: 13 N·m (130 kgf·cm, 9 ft·lbf) for engine

3. REFILL WITH ENGINE COOLANT

(a) Slowly fill the system with coolant.

Capacity: 11.6 liters (12.3 US qts, 10.2 Imp. qts)

NOTICE:

Do not use plain water alone.

HINT:

- Use of improper coolants may damage the engine cooling system.
- Use ”Toyota Super Long Life Coolant” or similar high quality ethylene glycol based non−silicate, non−amine, non−nitrite, and non−borate coolant with long−life hybrid organic acid technology.
- New Toyota vehicles are filled with Toyota Super Long Life Coolant (color is pink, premixed ethylene glycol concentration is approximately 50 % and freezing temperature is −35˚C (−31˚F)). When replacing the coolant, Toyota Super long Life Coolant is recommended.
- Observe the coolant level inside the radiator by pressing the inlet and outlet radiator hoses several times by hand. if the coolant level goes down, add the coolant.

(b) Install the radiator cap.

(c) Bleed the cooling system.

(1) Start the engine, and open the heater water valve.

(2) Maintain the engine speed at 2,000 − 2,500 rpm, and warm up the engine.

(d) Stop the engine, and wait until the engine coolant cools down.

(e) Refill coolant into the reservoir until it is ”FULL”.

4. CHECK FOR ENGINE COOLANT LEAKS

5. CHECK ENGINE COOLANT SPECIFIC GRAVITY CORRECTLY

6. REINSTALL ENGINE UNDER COVER

CO1DF−01

COMPONENTS

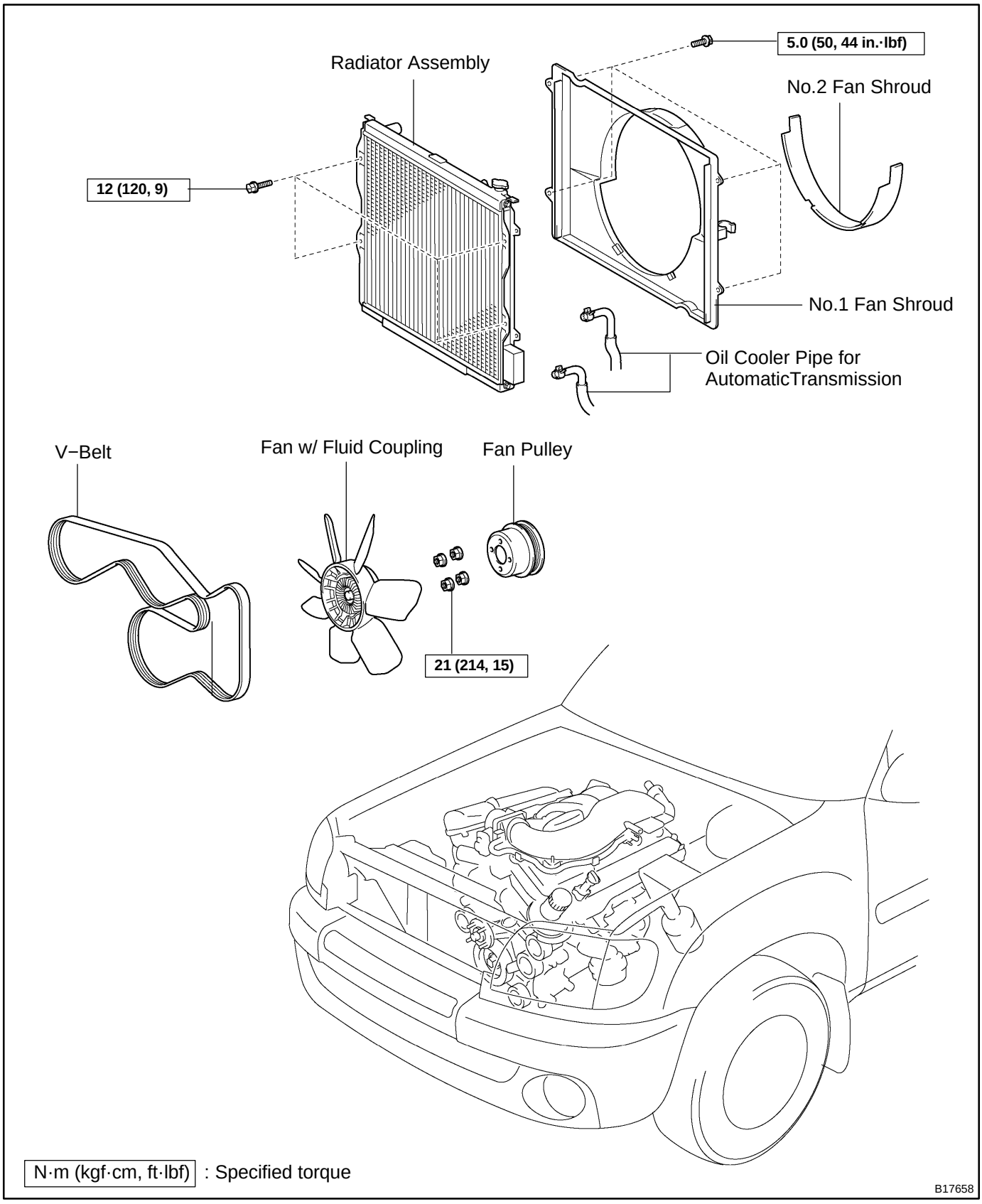

CO1DH−01

INSTALLATION

1. INSTALL NO.1 FAN SHROUD

Install the No.1 fan shroud with the 4 bolts.

Torque: 5.0 N·m (50 kgf·cm, 44 in.·lbf)

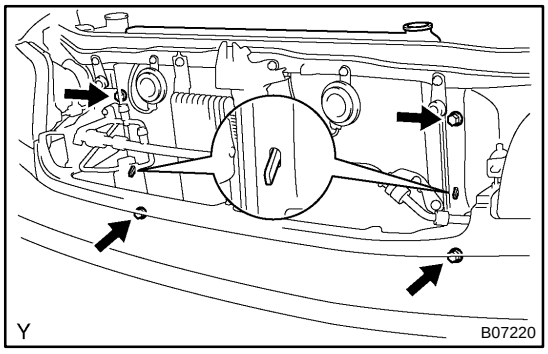

2. INSTALL RADIATOR ASSEMBLY

(a) Set the radiator bracket hooks to the radiator support holes.

(b) Install the 4 bolts.

Torque: 12 N·m (120 N·m, 9 ft·lbf)

3. INSTALL NO.2 FAN SHROUD

Install the No.2 fan shroud with the 2 clips.

4. CONNECT A/T OIL COOLER HOSES TO RADIATOR

5. CONNECT UPPER RADIATOR HOSE TO RADIATOR

6. CONNECT LOWER RADIATOR HOSE TO RADIATOR

7. CONNECT RADIATOR RESERVOIR HOSE TO RADIATOR

8. FILL WITH ENGINE COOLANT

9. START ENGINE AND CHECK FOR ENGINE COOLANT LEAKS

10. RECHECK ENGINE COOLANT LEVEL

11. INSTALL ENGINE UNDER COVER

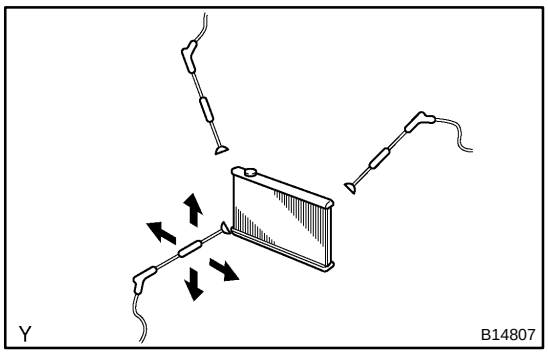

RADIATOR

CO1DD−01

ON−VEHICLE CLEANING

INSPECT FINS FOR BLOCKAGE

If fins are clogged, wash them with water or a steam cleaner and dry with compressed air.

NOTICE:

- **If the distance between the steam cleaner and the core is too close, there is a possibility of damaging the fin, so keep the following injection distance.**

Injection Pressure	Injection Distance
2,942 to 4,903 kpa (30 to 50 kg/cm^{2,} 427 to711 psi)	300 mm (11.811 in)
4,903 to 7,845 kpa (50 to 80 kg/cm^{2,} 711 to 1,138 psi)	500 mm (19.685 in)

- **If the fins are bent, straighten them with a screwdriver or pliers.**
- **Never apply water directly onto the electronic components.**

CO1DE−01

ON−VEHICLE INSPECTION

1. REMOVE RADIATOR CAP

CAUTION:

To avoid the danger of being burned, do not remove the radiator cap while the engine and radiator are still hot, as fluid and steam can be blown out under pressure.

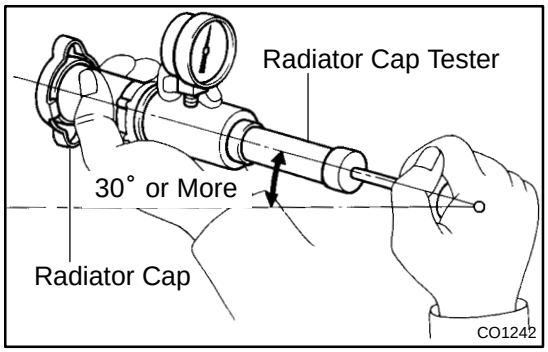

2. INSPECT RADIATOR CAP

NOTICE:

- **If the radiator cap has contaminations, always rinse it with water.**
- **Before using a radiator cap tester, wet the relief valve and pressure valve with engine coolant or water.**
- **When performing steps (a) and (b) below, keep the tester at an angle of over 30° above the horizontal.**

(a) Using a radiator cap tester, slowly pump the tester and check that air is coming from the vacuum valve.

Pump speed: 1 push/(3 seconds or more)

NOTICE:

Push the pump at a constant speed.

If air is not coming from the vacuum valve, replace the radiator cap.

(b) Pump the radiator cap tester, and measure the relief valve opening pressure.

Pump speed: 1 push within 1 second

NOTICE:

This pump speed is for the first pump only (in order to close the vacuum valve). After this, the pump speed can be reduced.

Opening pressure:

Standard	93 to 123 kPa (0.95 to 1.25 kgf/cm^2,13.5 to 17.8 psi)
Minimum	78 kPa (0.8 kgf/cm^2, 11.4 psi)

HINT:

Use the tester's maximum reading as the opening pressure.

If the opening pressure is less than minimum, replace the radiator cap.

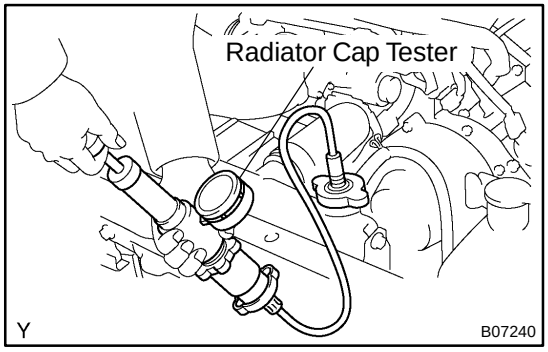

3. INSPECT COOLING SYSTEM FOR LEAKS

(a) Fill the radiator with coolant and attach a radiator cap tester.

(b) Warm up the engine.

(c) Pump it to 118 kPa (1.2 kgf/cm^2, 17.1 psi), and check that the pressure does not drop.

If the pressure drops, check the hoses, radiator or water pump for leaks. If no external leaks are found, check the heater core, cylinder block and head.

4. REINSTALL RADIATOR CAP

CO1DG−01

REMOVAL

1. **REMOVE ENGINE UNDER COVER**
2. **DRAIN ENGINE COOLANT**
3. **DISCONNECT RADIATOR RESERVOIR HOSE FROM RADIATOR**
4. **DISCONNECT UPPER RADIATOR HOSE FROM RADIATOR**
5. **DISCONNECT LOWER RADIATOR HOSE FROM RADIATOR**
6. **DISCONNECT A/T OIL COOLER HOSES FROM RADIATOR**
7. **REMOVE NO.2 FAN SHROUD**

Remove the 2 clips and No.2 fan shroud.

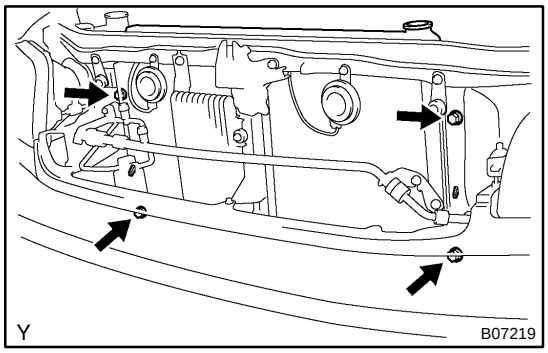

8. **REMOVE RADIATOR ASSEMBLY**

Remove the 4 bolts and radiator assembly.

9. **REMOVE NO.1 FAN SHROUD**

Remove the 4 bolts and No.1 fan shroud.

CO1DB−01

INSPECTION

INSPECT THERMOSTAT

HINT:

The valve opening temperature is inscribed on the thermostat.

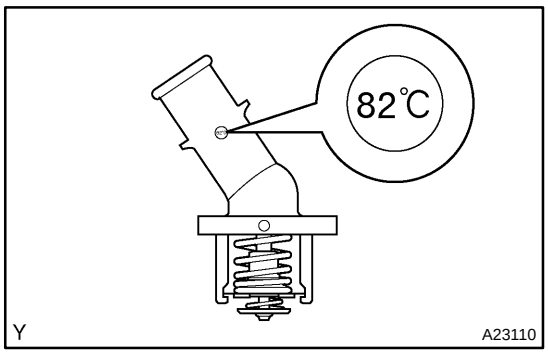

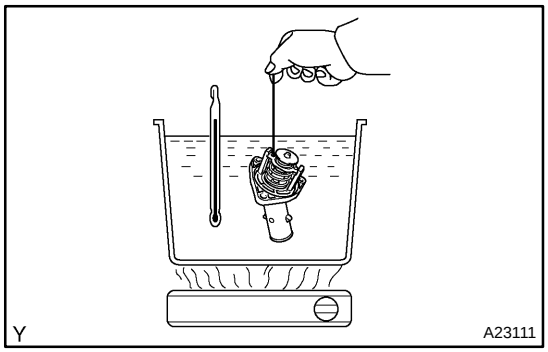

(a) Immerse the thermostat in the water, then heat the water gradually.

(b) Check the valve opening temperature of the thermostat.
Valve opening temperature:
80 to 84°C (176 to 183°F)

If the valve opening temperature is not as specified, replace the thermostat.

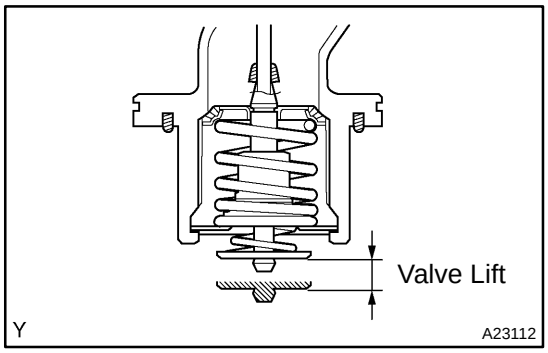

(c) Check the valve lift.
Valve lift: 8 mm (0.31 in.) or more at 95°C (203°F)

If the valve lift is not as specified, replace the thermostat.

(d) Check that the valve is fully closed when the thermostat is at low temperature (below 40 °C (104 °F)).

If not fully closed, replace the thermostat.

CO1DC−01

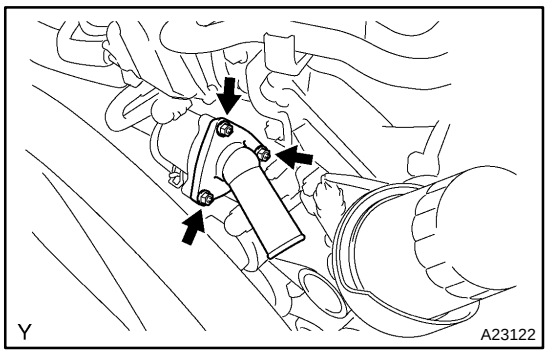

INSTALLATION

1. INSTALL WATER INLET W/THERMOSTAT

(a) Install a new gasket to the water inlet w/ thermostat.

(b) Install the water inlet w/ thermostat with the 3 nuts.

Torque: 9.0 N·m (92 kgf·cm, 80 in.·lbf)

2. CONNECT RADIATOR OUTLET, NO.2 HOSE CLAMP OR CLIP

3. ADD ENGINE COOLANT (See page CO−2)

4. CHECK FOR ENGINE COOLANT LEAKS

5. INSTALL V−BANK COVER

Install the V−bank cover with the 2 nuts.

Torque: 9.8 N·m (100 kgf·cm, 87 in.·lbf)

THERMOSTAT

CO1DA−01

REMOVAL

HINT:

If the thermostat was not installed, cooling efficiency would be harmed. If the engine should tend to overheat, do not remove the thermostat.

1. **DRAIN ENGINE COOLANT (See page CO−2)**
2. **REMOVE V−BANK COVER**
3. **DISCONNECT RADIATOR OUTLET, NO.2 HOSE CLAMP OR CLIP**

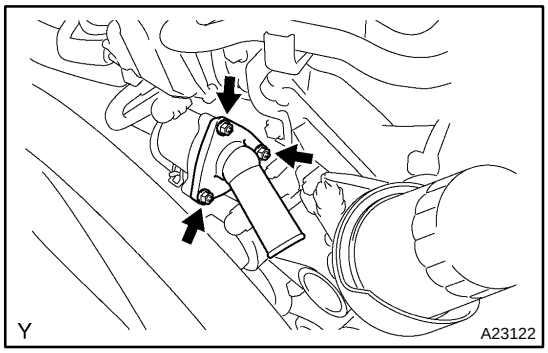

4. **REMOVE WATER INLET W/THERMOSTAT**

(a) Remove the 3 nuts, water inlet w/ thermostat and gasket.

WATER PUMP

COMPONENTS

CO1D6−01

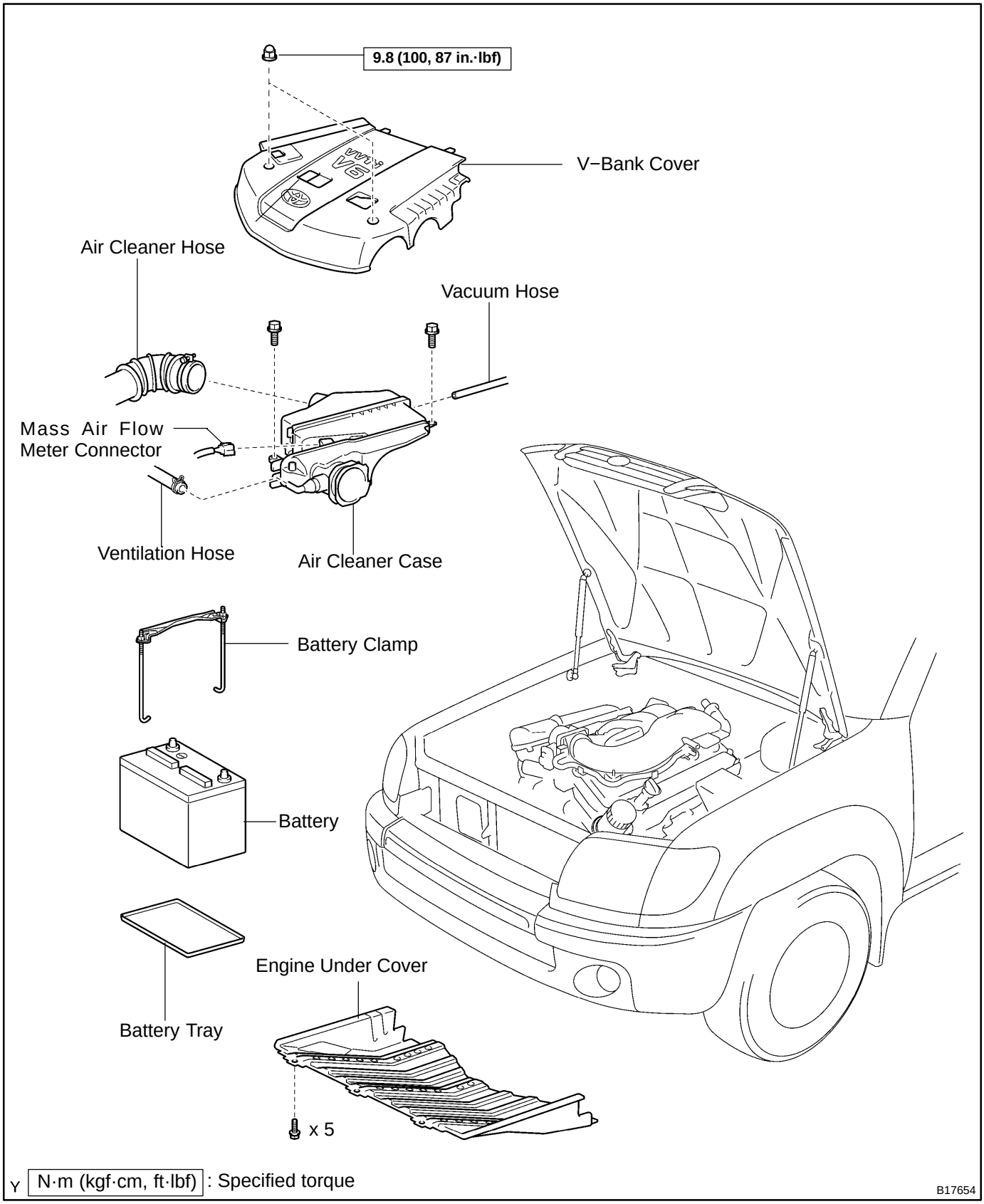

Y N·m (kgf·cm, ft·lbf) : Specified torque

B17654

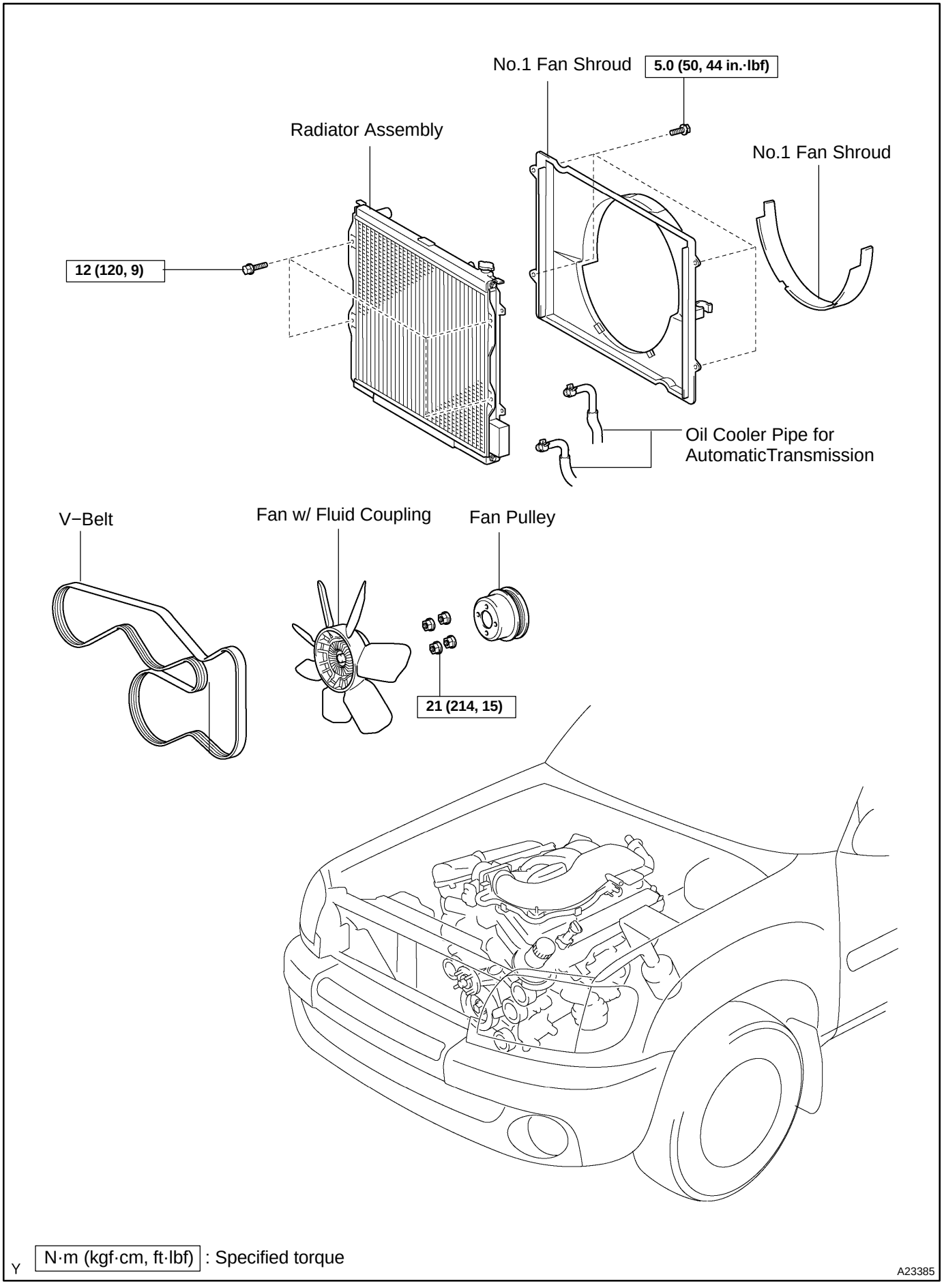
No.1 Fan Shroud
5.0 (50, 44 in.·lbf)
Radiator Assembly
No.1 Fan Shroud
12 (120, 9)
Oil Cooler Pipe for
AutomaticTransmission
V−Belt
Fan w/ Fluid Coupling
Fan Pulley
21 (214, 15)
Y
N·m (kgf·cm, ft·lbf) : Specified torque
A23385

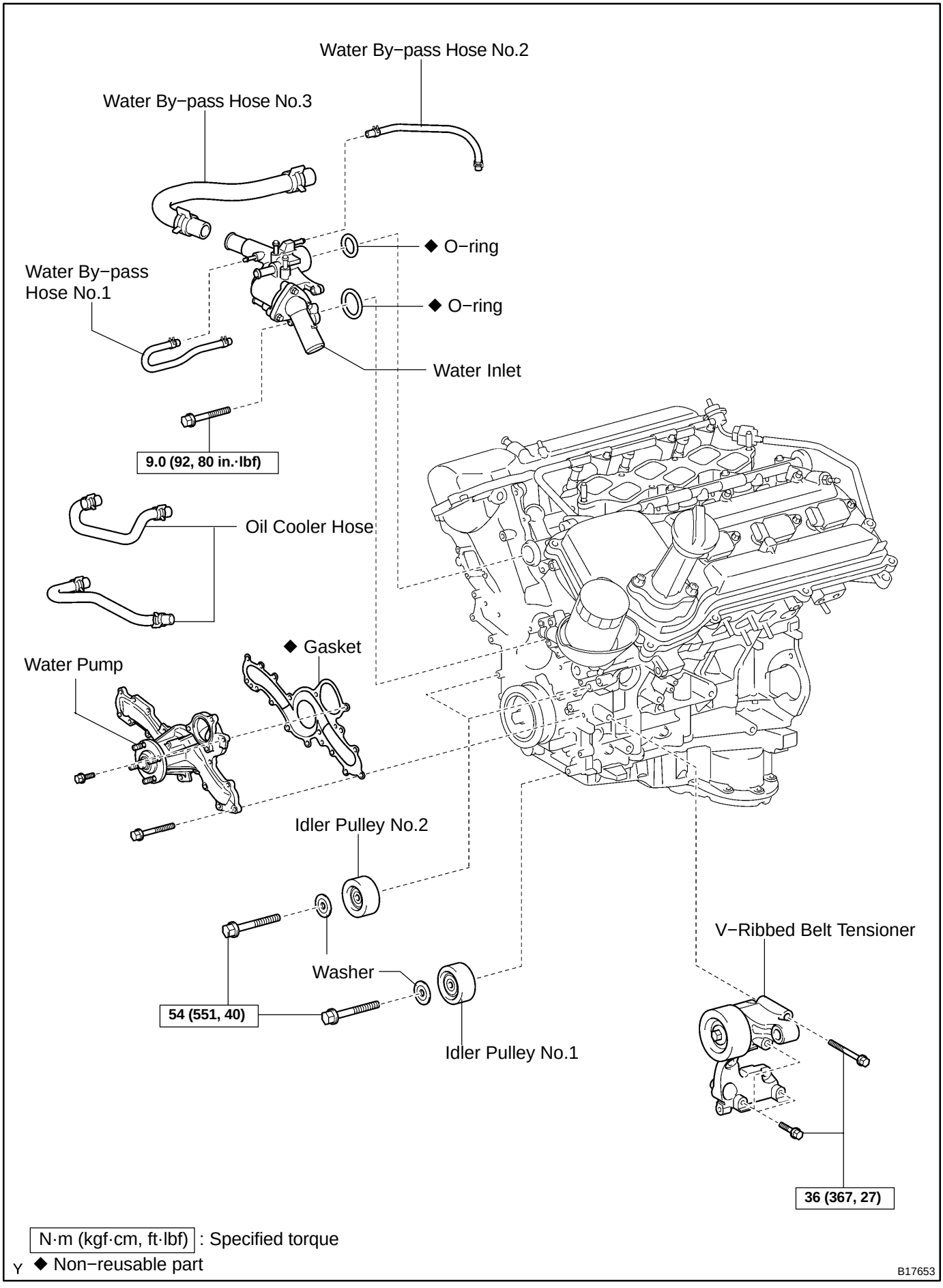
Water By−pass Hose No.2
Water By−pass Hose No.3
◆ O−ring
Water By−pass Hose No.1
◆ O−ring
Water Inlet
9.0 (92, 80 in.·lbf)
Oil Cooler Hose
◆ Gasket
Water Pump
Idler Pulley No.2
V−Ribbed Belt Tensioner
Washer
54 (551, 40)
Idler Pulley No.1
36 (367, 27)
N·m (kgf·cm, ft·lbf) : Specified torque
◆ Non−reusable part
B17653

CO1D8−01

INSPECTION

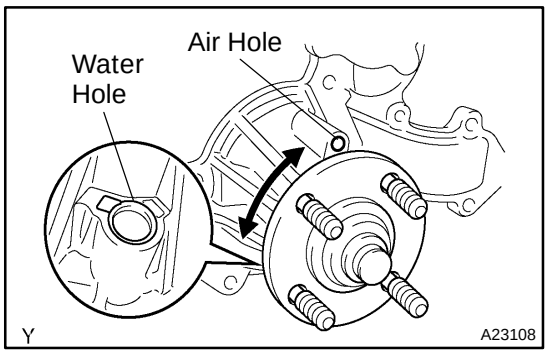

1. INSPECT WATER PUMP

(a) Visually check the air hole and water hole for coolant leakage.

If leakage is found, replace the water pump and timing belt.

(b) Turn the pulley, and check that the water pump bearing moves smoothly and quietly.

If necessary, replace the water pump.

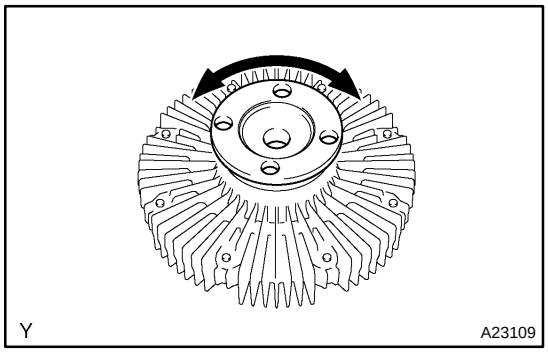

2. INSPECT FLUID COUPLING

(a) Check that the fluid coupling is not damaged and that no silicon oil leaks.

If necessary, replace the fluid coupling.

CO1D9−01

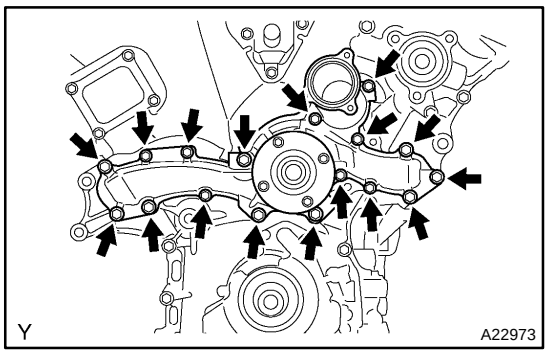

INSTALLATION

1. INSTALL WATER PUMP

(a) Install a new gasket and the water pump with the 17 bolts.
Torque:
9.0 N·m (92 kgf·cm, 80 in.·lbf) for 10 mm (0.39 in.) head
23 N·m (235 kgf·cm, 17 ft·lbf) for 12 mm (0.47 in.) head

2. INSTALL V−RIBBED BELT TENSIONER ASSY
(See page EM−44)

3. INSTALL COOLER COMPRESSOR
(See page EM−108)

4. INSTALL GENERATOR (See page CH−15)

5. INSTALL IDLER PULLEY

(a) Install the 2 idler pulleys with the 2 bolts.
Torque: 39 N·m (398 kgf·cm, 29 ft·lbf)

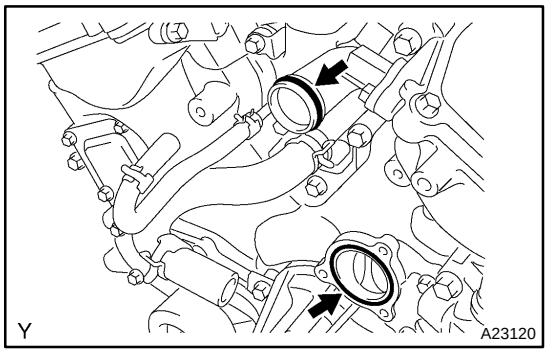

6. INSTALL WATER INLET

(a) Install a new O−ring to the water outlet pipe.
(b) Install a new gasket to the water pump.
(c) Apply soapy water to the O−ring.

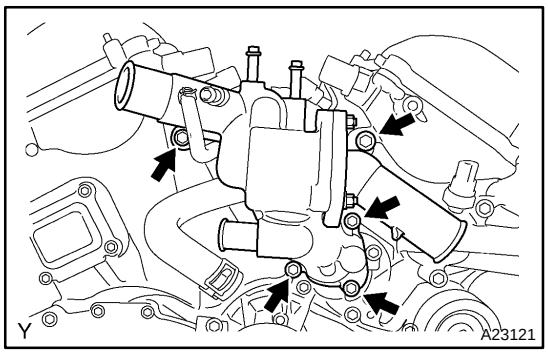

(d) Install the water inlet with the 5 bolts.
Torque: 9.0 N·m (92 kgf·cm, 80 in.·lbf)
(e) Connect the 5 water by−pass hoses.
(f) Connect the 2 radiator hoses.
(g) Connect the 2 oil cooler hoses (w/ oil cooler).

7. INSTALL AIR CLEANER

8. CONNECT VENTILATION HOSE NO.2

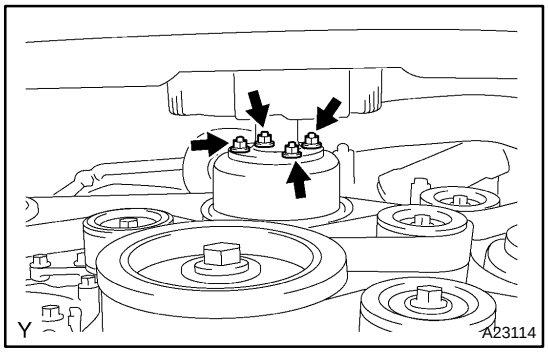

9. INSTALL FAN W/ FLUID COUPLING

(a) Put the fan pulley to the water pump.
(b) Put the fan w/ fluid coupling and fan shroud together.
(c) Temporarily install the 4 fluid coupling nuts.
(d) Tighten the 4 fan shroud bolts.
Torque: 5.0 N·m (51 kgf·cm, 44 in.·lbf)
(e) Connect the reserve tank hose.
(f) Fasten the 2 oil cooler hoses with the hose clamp.

10. INSTALL FAN AND GENERATOR V BELT
(See page EM−89)
11. FULLY TIGHTEN FAN W/ FLUID COUPLING
(a) Tighten the 4 fluid coupling bolts.
Torque: 21 N·m (214 kgf·cm, 15 ft·lbf)
12. ADD ENGINE COOLANT (See page CO−2)
13. CHECK FOR ENGINE COOLANT LEAKS
14. INSTALL ENGINE UNDER COVER
(a) Install the engine under cover with the 4 bolts.
Torque: 29 N·m (296 kgf·cm, 21 ft·lbf)
15. INSTALL V−BANK COVER
(a) Install the V−bank cover with the 2 nuts.
Torque: 9.8 N·m (100 kgf·cm, 87 in.·lbf)
16. RECHECK ENGINE COOLANT LEVEL
17. FILL WITH ENGINE COOLANT
18. START ENGINE AND CHECK FOR ENGINE COOLANT LEAKS
19. RECHECK ENGINE COOLANT LEVEL

CO1D7−01

REMOVAL

1. REMOVE ENGINE UNDER COVER
2. DRAIN ENGINE COOLANT
3. REMOVE V−BANK COVER

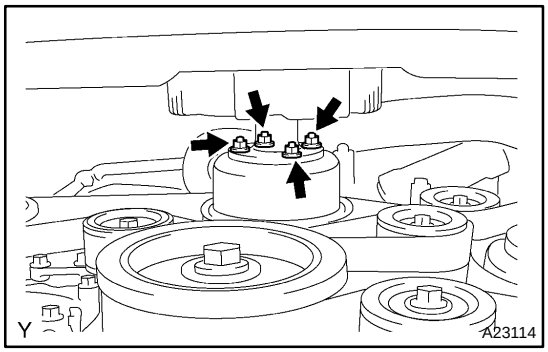

4. LOOSEN FAN W/ FLUID COUPLING

(a) Loosen the 4 fluid coupling bolts.

5. REMOVE FAN AND GENERATOR V BELT
(See page EM−62)

6. REMOVE FAN W/ FLUID COUPLING

(a) Disconnect the radiator reserve tank hose.

(b) Remove the 4 fan shroud bolts.

(c) Remove the 4 fluid coupling nuts, and then remove the fan w/ fluid coupling and fan shroud together.

(d) Remove the fan pulley.

7. DISCONNECT VENTILATION HOSE NO.2
8. REMOVE AIR CLEANER

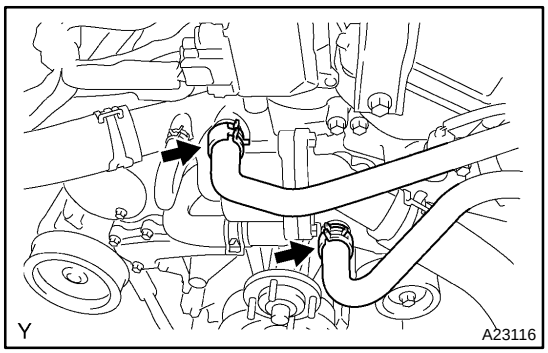

9. REMOVE WATER INLET

(a) Disconnect the 2 oil cooler hoses (w/ oil cooler).

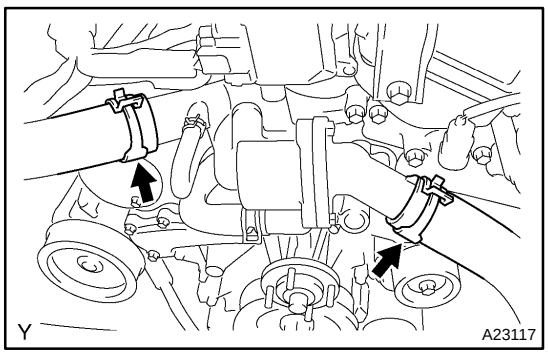

(b) Disconnect the 2 radiator hoses.

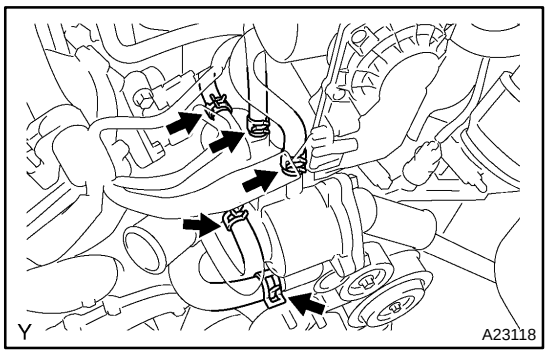

(c) Disconnect the 5 water by−pass hoses.

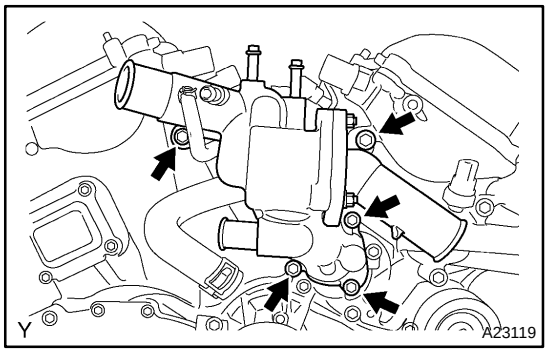

(d) Remove the 5 bolts and water inlet.
(e) Remove the O−ring from the water outlet pipe.
(f) Remove the gasket from the water pump.

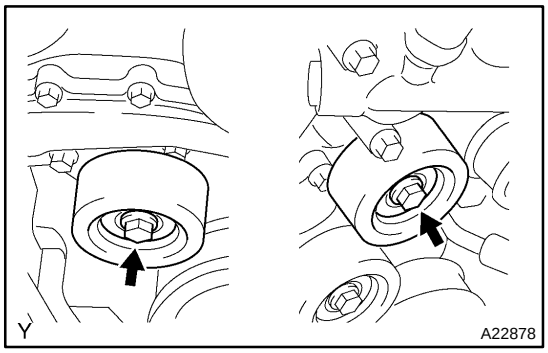

10. REMOVE IDLER PULLEY NO.2
(a) Remove the 2 bolts and 2 idler pulleys.
11. REMOVE GENERATOR (See page CH−7)
12. SEPARATE COOLER COMPRESSOR (See page EM−105)
13. REMOVE V−RIBBED BELT TENSIONER (Seepage EM−32)

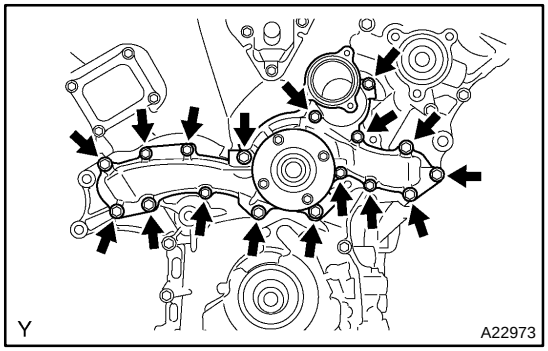

14. REMOVE WATER PUMP
(a) Remove the 17 bolts, water pump and gasket.

COOLANT

CO0IO−03

INSPECTION

HINT:

Check the coolant level when the engine is cold.

1. CHECK ENGINE COOLANT LEVEL AT RADIATOR RESERVOIR

The engine coolant level should be between the ”LOW” and ”FULL” lines at normal temperature (20˚C(68˚F)).

If low, check for leaks and add ”TOYOTA Long Llife Coolant” or equivalent up to the ”FULL” line.

2. CHECK ENGINE COOLANT QUALITY

(a) Remove the radiator cap.

CAUTION:

To avoid the danger of being burned, do not remove the radiator cap while the engine and radiator are still hot, as fluid and steam can be blown out under pressure.

(b) There should not be any excessive deposits of rust or scale around the radiator cap or radiator filler hole, and the coolant should be free from oil.

If excessively dirty, clean the coolant passages and replace the coolant.

(c) Reinstall the radiator cap.

CO0IP−13

REPLACEMENT

CAUTION:

To avoid the danger of being burned, do not remove the radiator cap while the engine and radiator are still hot, as fluid and steam can be blown out under pressure.

1. REMOVE ENGINE UNDER COVER

2. DRAIN ENGINE COOLANT

(a) Remove the radiator cap.

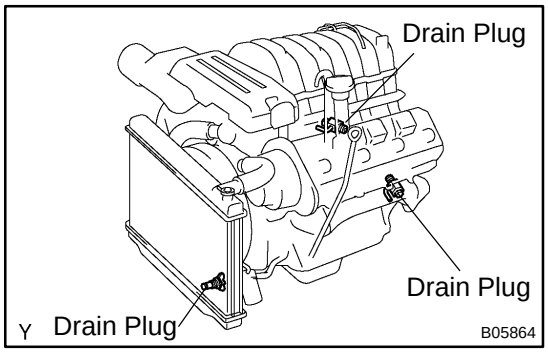

(b) Remove the 3 drain plugs on the engine and radiator, and drain the coolant.

(c) Close the 3 drain plugs.

Torque: 12.7 N·m (130 kgf·cm, 9 ft·lbf) for engine

3. REFILL WITH ENGINE COOLANT

(a) Slowly fill the system with coolant.

Capacity: 11.6 liters (12.3 US qts, 10.2 Imp. qts)

NOTICE:

Do not use plain water alone.

HINT:

- Use of improper coolants may damage the engine cooling system.
- Use ”Toyota Super Long Life Coolant” or similar high quality ethylene glycol based non−silicate, non−amine, non−nitrite, and non−borate coolant with long−life hybrid organic acid technology.
- New Toyota vehicles are filled with Toyota Super Long Life Coolant (color is pink, premixed ethylene glycol concentration is approximately 50 % and freezing temperature is −35˚C (−31˚F)). When replacing the coolant, Toyota Super long Life Coolant is recommended.
- Observe the coolant level inside the radiator by pressing the inlet and outlet radiator hoses several times by hand. if the coolant level goes down, add the coolant.

(b) Install the radiator cap.

(c) Bleed the cooling system.

(1) Start the engine, and open the heater water valve.

(2) Maintain the engine speed at 2,000 − 2,500 rpm, and warm up the engine.

(d) Stop the engine, and wait until the engine coolant cools down.

(e) Refill coolant into the reservoir until it is ”FULL”.

4. CHECK FOR ENGINE COOLANT LEAKS

5. CHECK ENGINE COOLANT SPECIFIC GRAVITY CORRECTLY

6. REINSTALL ENGINE UNDER COVER

CO1D3−01

COMPONENTS

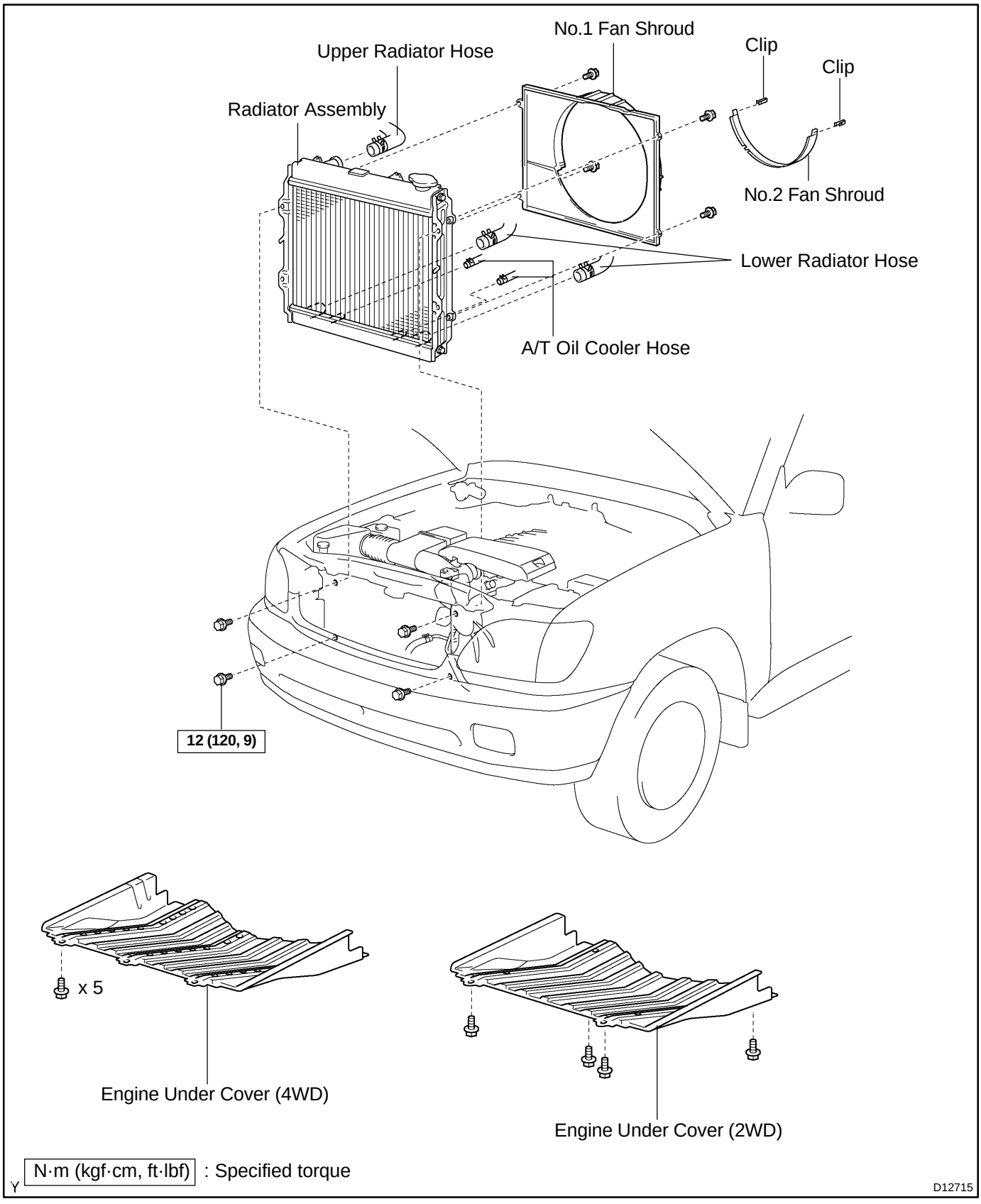

CO0UY−05

INSTALLATION

1. INSTALL NO.1 FAN SHROUD

Install the No.1 fan shroud with the 4 bolts.

Torque: 5.0 N·m (50 kgf·cm, 44 in.·lbf)

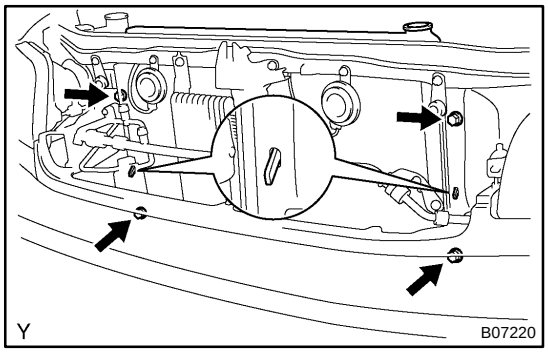

2. INSTALL RADIATOR ASSEMBLY

(a) Set the radiator bracket hooks to the radiator support holes.

(b) Install the 4 bolts.

Torque: 12 N·m (120 N·m, 9 ft·lbf)

3. INSTALL NO.2 FAN SHROUD

Install the No.2 fan shroud with the 2 clips.

4. CONNECT A/T OIL COOLER HOSES TO RADIATOR

5. CONNECT UPPER RADIATOR HOSE TO RADIATOR

6. CONNECT LOWER RADIATOR HOSE TO RADIATOR

7. CONNECT RADIATOR RESERVOIR HOSE TO RADIATOR

8. FILL WITH ENGINE COOLANT

9. START ENGINE AND CHECK FOR ENGINE COOLANT LEAKS

10. RECHECK ENGINE COOLANT LEVEL

11. INSTALL ENGINE UNDER COVER

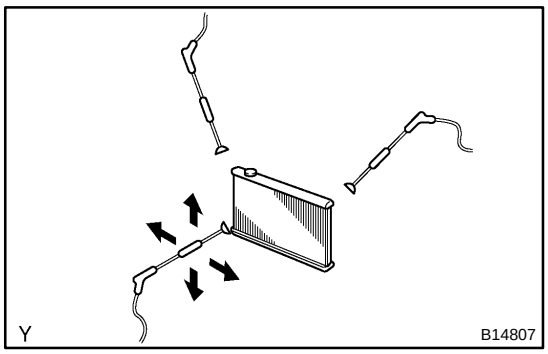

RADIATOR

CO1C6−02

ON−VEHICLE CLEANING

INSPECT FINS FOR BLOCKAGE

If fins are clogged, wash them with water or a steam cleaner and dry with compressed air.

NOTICE:

- **If the distance between the steam cleaner and the core is too close, there is a possibility of damaging the fin, so keep the following injection distance.**

Injection Pressure	Injection Distance
2,942 to 4,903 kPa (30 to 80 kgf·cm^2, 427 to 711 psi)	300 mm (11.81 in.)
4,903 to 7,845 kPa (50 to 80 kgf·cm^2, 711 to 1,138 psi)	500 mm (19.69 in.)

- **If the fins are bent, straighten them with a screwdriver or pliers.**
- **Never apply water directly onto the electronic components.**

CO0IZ−09

ON−VEHICLE INSPECTION

1. REMOVE RADIATOR CAP

CAUTION:

To avoid the danger of being burned, do not remove the radiator cap while the engine and radiator are still hot, as fluid and steam can be blown out under pressure.

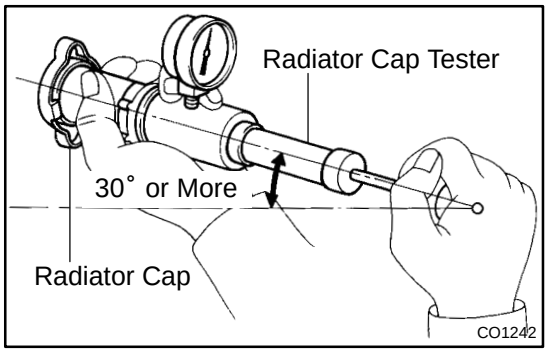

2. INSPECT RADIATOR CAP

NOTICE:

- **If the radiator cap has contaminations, always rinse it with water.**
- **Before using a radiator cap tester, wet the relief valve and pressure valve with engine coolant or water.**
- **When performing steps (a) and (b) below, keep the tester at an angle of over 30° above the horizontal.**

(a) Using a radiator cap tester, slowly pump the tester and check that air is coming from the vacuum valve.

Pump speed: 1 push/(3 seconds or more)

NOTICE:

Push the pump at a constant speed.

If air is not coming from the vacuum valve, replace the radiator cap.

(b) Pump the radiator cap tester, and measure the relief valve opening pressure.

Pump speed: 1 push within 1 second

NOTICE:

This pump speed is for the first pump only (in order to close the vacuum valve). After this, the pump speed can be reduced.

Opening pressure:

Standard	74 to 103 kPa (0.75 to 1.05 kgf/cm^2,10.7 to 14.9 psi)
Minimum	59 kPa (0.6 kgf/cm^2, 8.6 psi)

HINT:

Use the tester's maximum reading as the opening pressure.

If the opening pressure is less than minimum, replace the radiator cap.

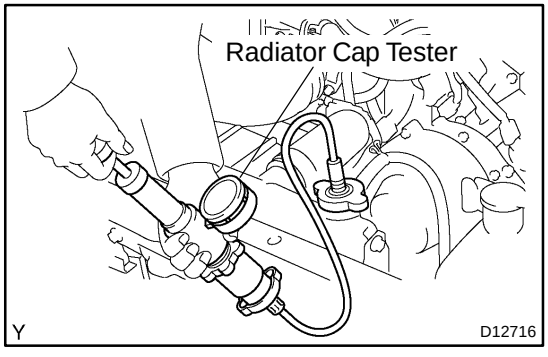

3. INSPECT COOLING SYSTEM FOR LEAKS

(a) Fill the radiator with coolant and attach a radiator cap tester.

(b) Warm up the engine.

(c) Pump it to 118 kPa (1.2 kgf/cm^2, 17.1 psi), and check that the pressure does not drop.

If the pressure drops, check the hoses, radiator or water pump for leaks. If no external leaks are found, check the heater core, cylinder block and head.

4. REINSTALL RADIATOR CAP

CO0UV−01

REMOVAL

1. **REMOVE ENGINE UNDER COVER**
2. **DRAIN ENGINE COOLANT**
3. **DISCONNECT RADIATOR RESERVOIR HOSE FROM RADIATOR**
4. **DISCONNECT UPPER RADIATOR HOSE FROM RADIATOR**
5. **DISCONNECT LOWER RADIATOR HOSE FROM RADIATOR**
6. **DISCONNECT A/T OIL COOLER HOSES FROM RADIATOR**
7. **REMOVE NO.2 FAN SHROUD**

Remove the 2 clips and No.2 fan shroud.

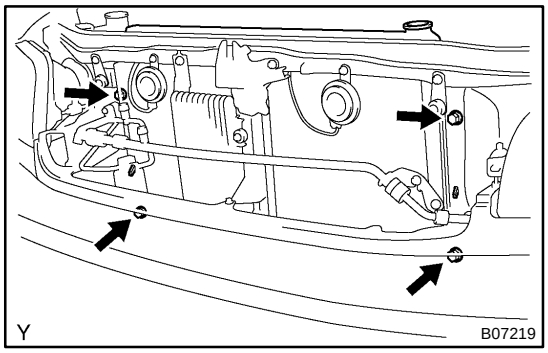

8. **REMOVE RADIATOR ASSEMBLY**

Remove the 4 bolts and radiator assembly.

9. **REMOVE NO.1 FAN SHROUD**

Remove the 4 bolts and No.1 fan shroud.

THERMOSTAT

COMPONENTS

CO0IU−08

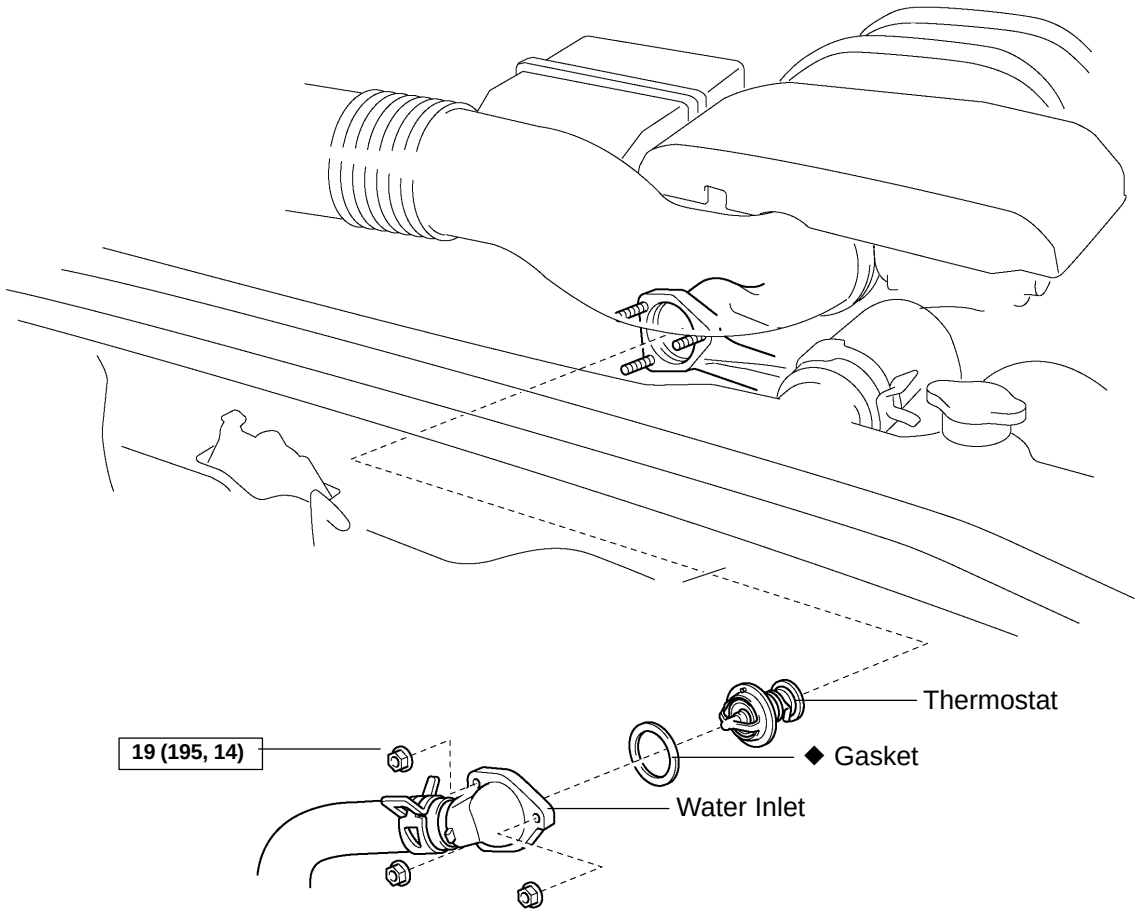

N·m (kgf·cm, ft·lbf) : Specified torque
◆ Non−reusable part

D12717

CO0IW−09

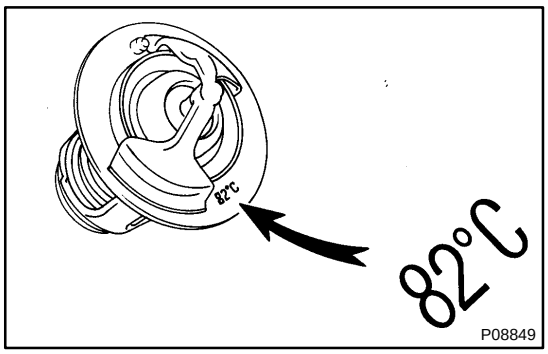

INSPECTION

INSPECT THERMOSTAT

HINT:

The thermostat is numbered with the valve opening temperature.

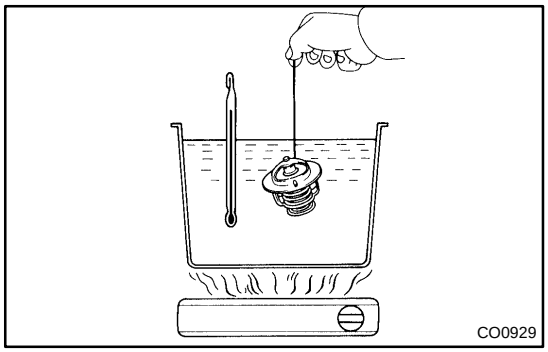

(a) Immerse the thermostat in water and gradually heat the water.

(b) Check the valve opening temperature.

Valve opening temperature: 80 to 84˚C (176 to 183˚F)

If the valve opening temperature is not as specified, replace the thermostat.

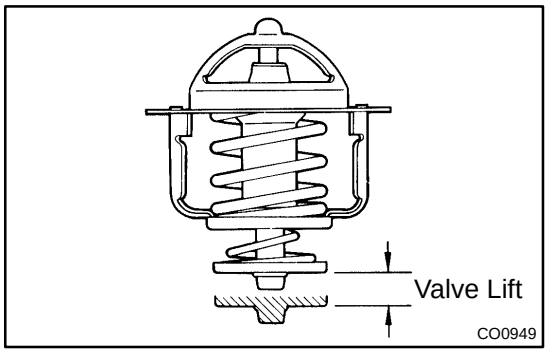

(c) Check the valve lift.

Valve lift: 10 mm (0.39 in.) or more at 95˚C (203˚F)

If the valve lift is not as specified, replace the thermostat.

(d) Check that the valve is fully closed when the thermostat is at low temperatures (below 40˚C (104˚F)).

If not closed, replace the thermostat.

CO0IX−03

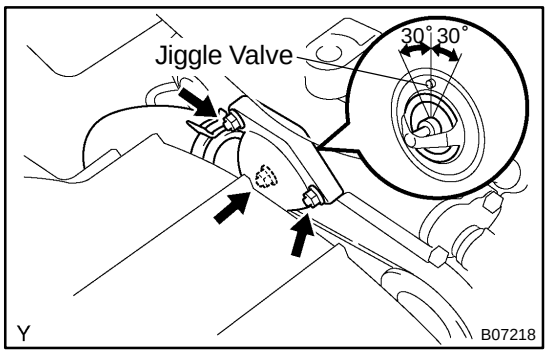

INSTALLATION

1. PLACE THERMOSTAT IN WATER INLET HOUSING

(a) Install a new gasket to the thermostat.

(b) Insert the thermostat into the water inlet housing with the jiggle valve facing straight upward.

HINT:

The jiggle valve may be set within 30° of either side of the prescribed position.

2. INSTALL WATER INLET

Install the water inlet with the 3 nuts.

Torque: 19 N·m (195 kgf·cm, 14 ft·lbf)

3. FILL WITH ENGINE COOLANT

4. START ENGINE AND CHECK FOR COOLANT LEAKS

5. RECHECK ENGINE COOLANT LEVEL

CO0IV−05

REMOVAL

HINT:

Removal of the thermostat would have an adverse effect, causing a lowering of cooling efficiency. Do not remove the thermostat, even if the engine tends to overheat.

1. DRAIN ENGINE COOLANT

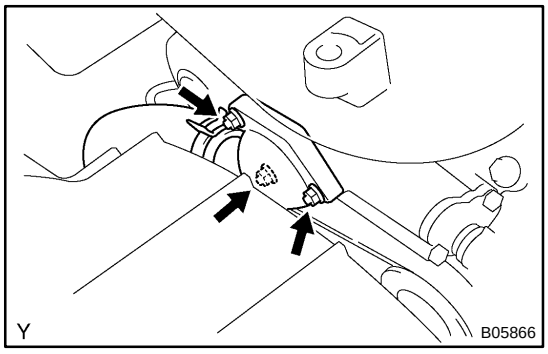

2. DISCONNECT WATER INLET FROM WATER INLET HOUSING

Remove the 3 nuts and disconnect the water inlet from the water inlet housing.

3. REMOVE THERMOSTAT

(a) Remove the thermostat.

(b) Remove the gasket from the thermostat.

WATER PUMP

COMPONENTS

CO0IQ−11

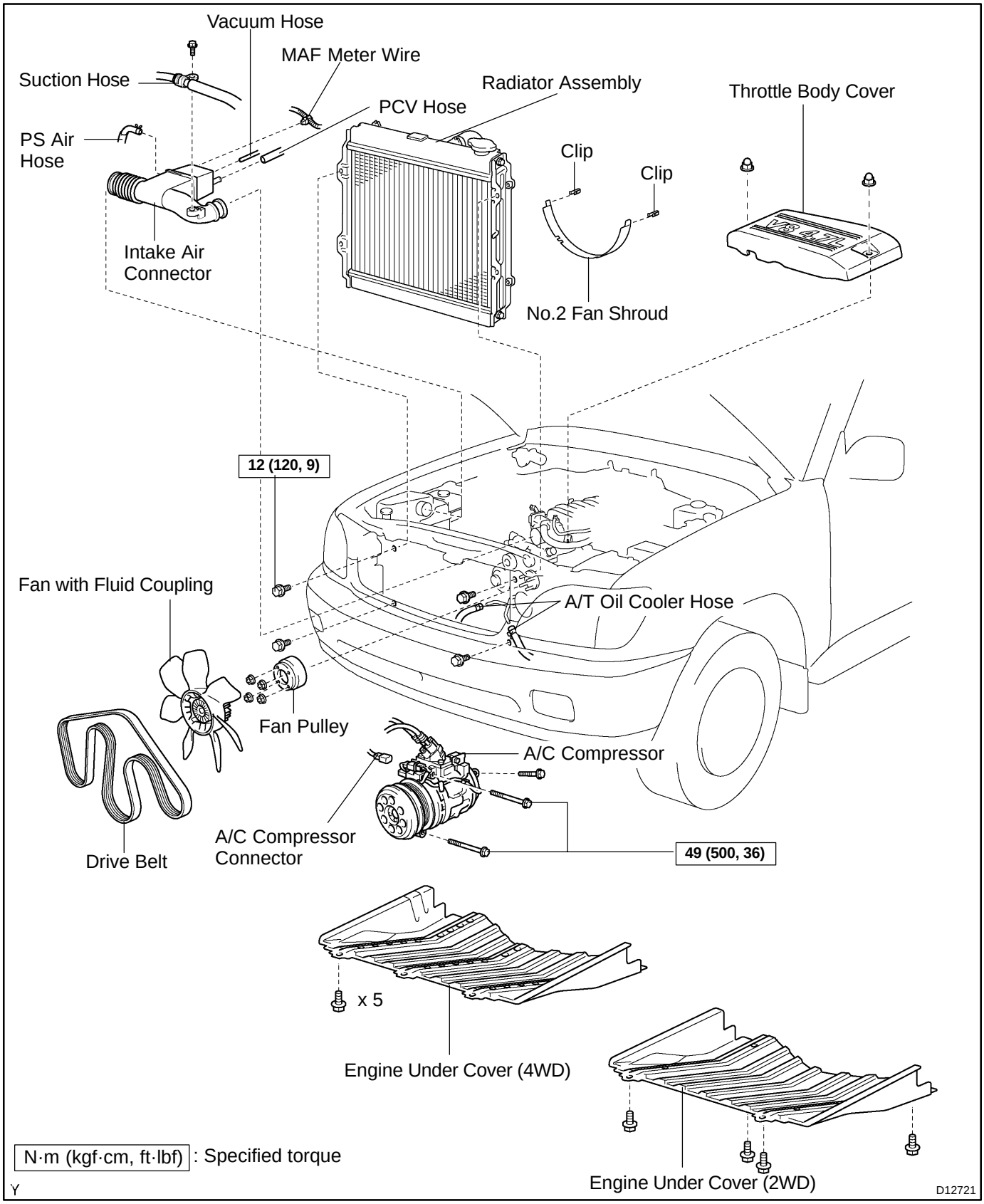

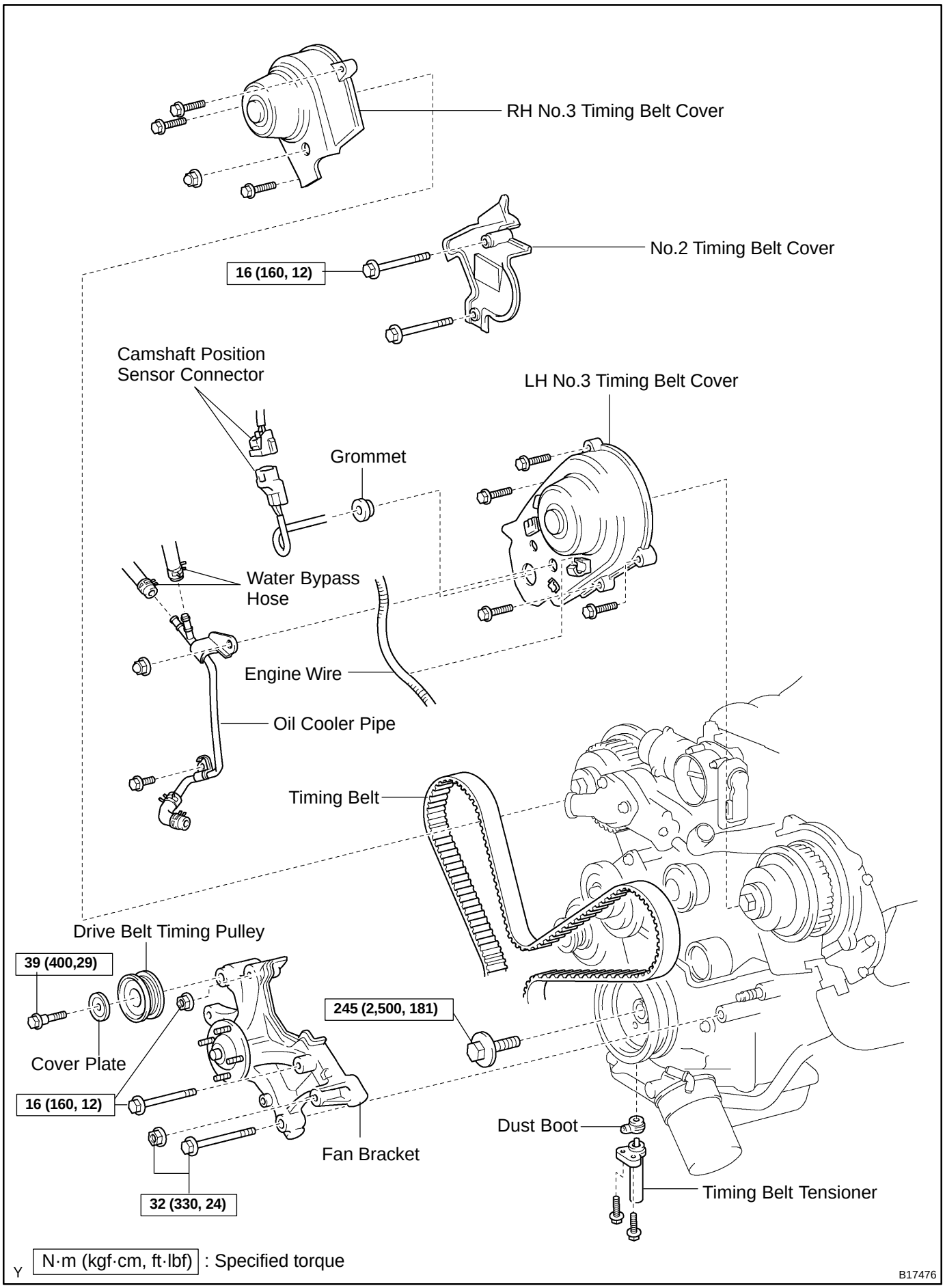
RH No.3 Timing Belt Cover
No.2 Timing Belt Cover
16 (160, 12)
Camshaft Position Sensor Connector
LH No.3 Timing Belt Cover
Grommet
Water Bypass Hose
Engine Wire
Oil Cooler Pipe
Timing Belt
Drive Belt Timing Pulley
39 (400,29)
245 (2,500, 181)
Cover Plate
16 (160, 12)
Dust Boot
Fan Bracket
32 (330, 24)
Timing Belt Tensioner
Y N·m (kgf·cm, ft·lbf) : Specified torque
B17476

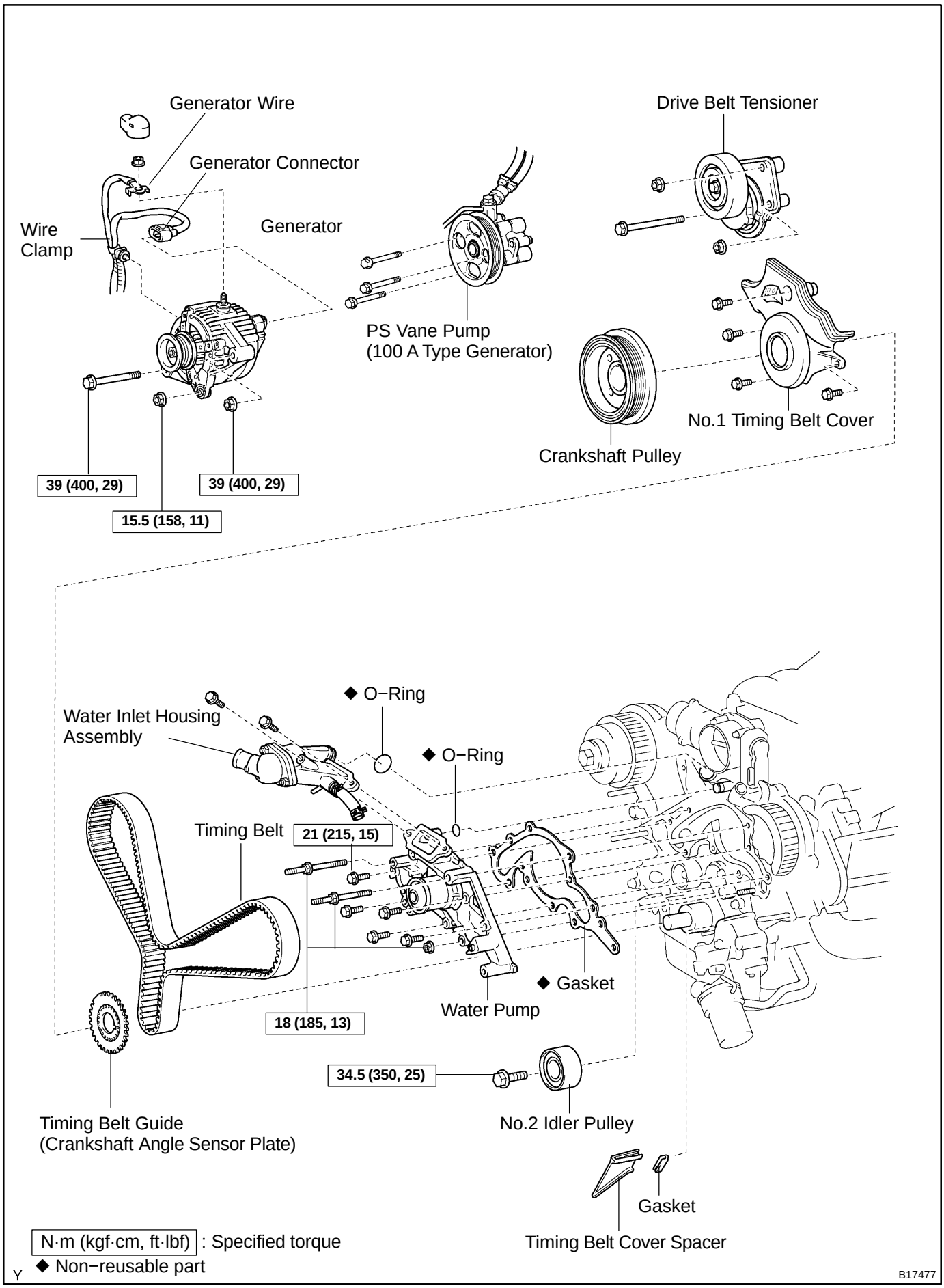
Generator Wire
Generator Connector
Wire Clamp
Generator
PS Vane Pump
(100 A Type Generator)
Drive Belt Tensioner
No.1 Timing Belt Cover
Crankshaft Pulley
39 (400, 29)
39 (400, 29)
15.5 (158, 11)
◆ O−Ring
Water Inlet Housing Assembly
◆ O−Ring
Timing Belt
21 (215, 15)
◆ Gasket
Water Pump
18 (185, 13)
34.5 (350, 25)
No.2 Idler Pulley
Timing Belt Guide
(Crankshaft Angle Sensor Plate)
Gasket
Timing Belt Cover Spacer
N·m (kgf·cm, ft·lbf) : Specified torque
◆ Non−reusable part
Y
B17477

CO0UZ−06

INSPECTION

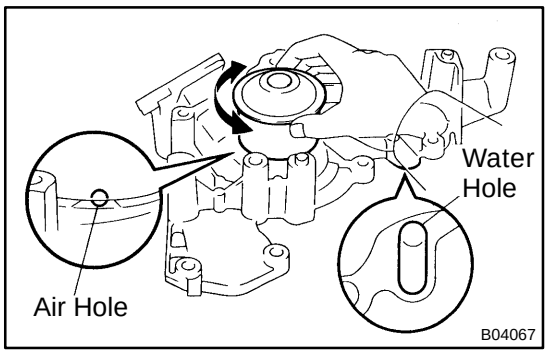

1. INSPECT WATER PUMP

(a) Visually check the air hole and water hole for coolant leakage.

If leakage is found, replace the water pump and timing belt.

(b) Turn the pulley, and check that the water pump bearing moves smoothly and quietly.

If necessary, replace the water pump.

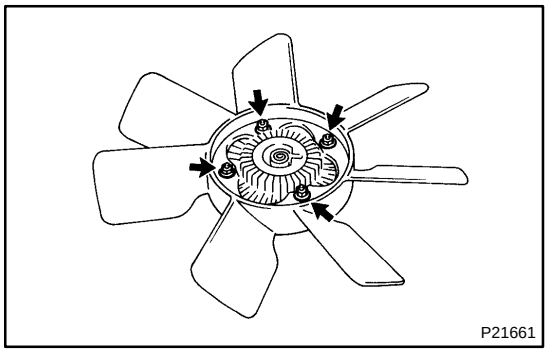

2. INSPECT FLUID COUPLING

(a) Remove the 4 nuts and fan from the fluid coupling.

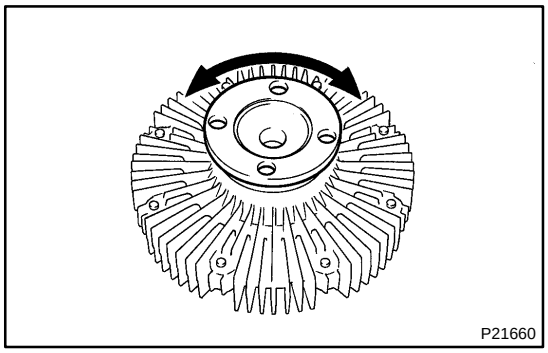

(b) Check that the fluid coupling is not damaged and that no silicon oil leaks.

If necessary, replace the fluid coupling.

(c) Reinstall the fan to the fluid coupling with the 4 nuts.

Torque: 5.4 N·m (55 kgf·cm, 47 in.·lbf)

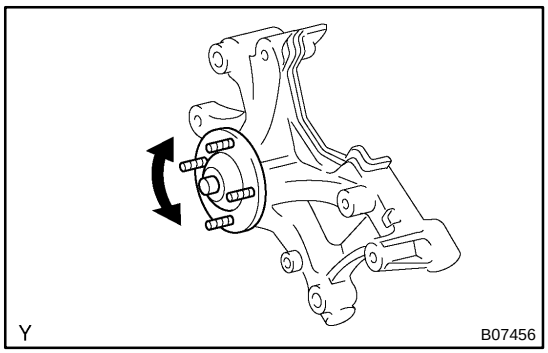

3. INSPECT FAN PULLEY BRACKET

Check the turning smoothness of the fan pulley.

If necessary, replace the pulley bracket.

4. INSPECT TIMING BELT COMPONENTS

(See page EM−21)

CO0IT−07

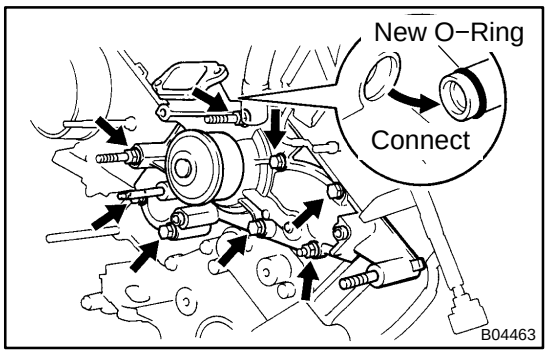

INSTALLATION

1. INSTALL WATER PUMP

(a) Install a new O−ring to the water bypass pipe end.

(b) Apply soapy water to the O−ring.

(c) Connect the water pump to the water bypass pipe end.

(d) Install the water pump and a new gasket with the 5 bolts, 2 stud bolts and nut. Uniformly tighten the bolts, stud bolts and nut in several passes.

Torque:

Bolt: 21 N·m (215 kgf·cm, 15 ft·lbf)

Stud bolt and nut: 18 N·m (185 kgf·cm, 13 ft·lbf)

2. INSTALL WATER INLET AND INLET HOUSING ASSEMBLY

(a) Remove any old packing (FIPG) material and be careful not to drop any oil on the contact surfaces of the water inlet housing and water pump.

- Using a razor blade and gasket scraper, remove all the old packing (FIPG) material from the gasket surfaces and sealing groove.
- Thoroughly clean all components to remove all the loose material.
- Using a non−residue solvent, clean both sealing surfaces.

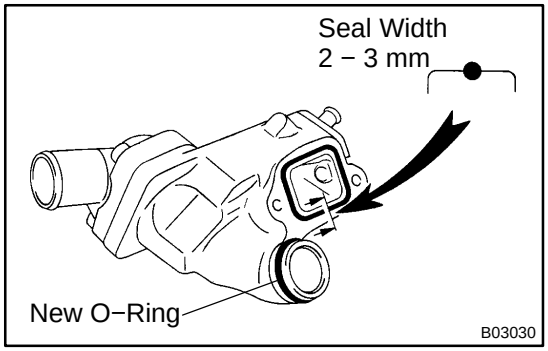

(b) Apply seal packing to the sealing groove of water inlet housing as shown in the illustration.

Seal packing: Part No. 08826−00100 or equivalent

- Install a nozzle that has been cut to a 2 − 3 mm (0.08 − 0.12 in.) opening.
- Parts must be assembled within 5 minutes of application. Otherwise the material must be removed and reapplied.
- Immediately remove nozzle from the tube and reinstall cap.

(c) Install a new O−ring to the water inlet housing.

(d) Apply soapy water on the O−ring.

(e) Attach the water inlet housing end to the front water bypass joint hole.

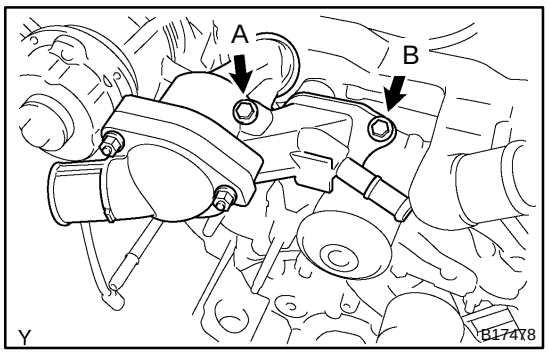

(f) Install the water inlet and housing assembly with the 2 bolts. Alternately tighten the bolts.
Torque: 18 N·m (185 kgf·cm, 13 ft·lbf)

HINT:
Each bolt length is indicated in the illustration.
Bolt length:
76 mm (3.00 in.) for A
22 mm (0.87 in.) for B

(g) Connect the water bypass hose to the water inlet housing.

3. INSTALL NO.2 IDLER PULLEY (See page EM−23)
4. INSTALL TIMING BELT (See page EM−23)
5. FILL WITH ENGINE COOLANT
6. START ENGINE AND CHECK FOR ENGINE COOLANT LEAKS
7. RECHECK ENGINE COOLANT LEVEL

CO0IR−07

REMOVAL

1. **DRAIN ENGINE COOLANT**
2. **REMOVE TIMING BELT (See page EM−16)**
3. **REMOVE NO.2 IDLER PULLEY (See page EM−16)**

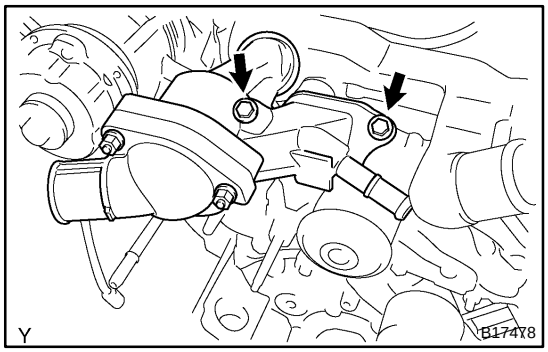

4. **REMOVE WATER INLET AND INLET HOUSING ASSEMBLY**

(a) Disconnect the water bypass hose from the water inlet housing.

(b) Remove the 2 bolts holding the water inlet housing to the water pump.

(c) Disconnect the water inlet housing from the front water bypass joint, and remove the water inlet and inlet housing assembly.

(d) Remove the O−ring from the water inlet housing.

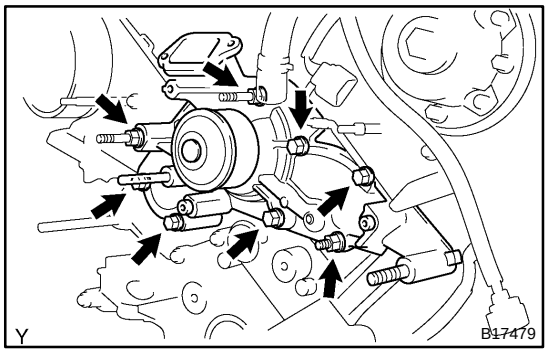

5. **REMOVE WATER PUMP**

(a) Remove the 5 bolts, 2 stud bolts, nut, water pump and gasket.

(b) Remove the O−ring from the water bypass pipe.

DIDW3–01

BASIC INSPECTION

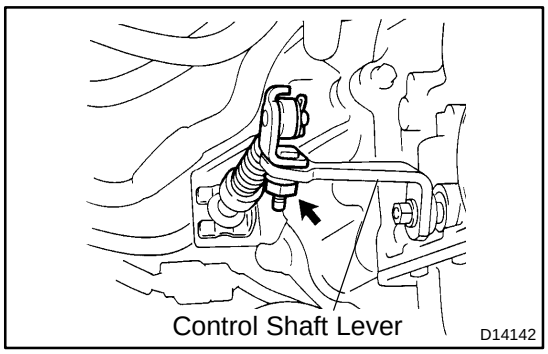

1. INSPECT AND ADJUST SHIFT LEVER POSITION

(a) When shifting the shift lever from the N position to other positions, check that the lever can be shifted smoothly and accurately to each position and that the position indicator comes on in accordance with the shift lever position.

If the indicator and shift lever position do not match, carry out the following adjustment procedures.

(1) Remove the nut and disconnect the shift control cable from the control shaft lever.
(2) Move the control shaft fully rearward.
(3) Return the control shaft lever 2 notches to the N position.
(4) Set the shift lever to the N position.
(5) Connect the shift control cable and temporarily install the control shaft lever nut.
(6) While holding the shift lever lightly toward the R position side, tighten the control shaft lever nut.

Torque: 14.5 N·m (148 kgf·cm, 11 ft·lbf)

(7) Start the engine and make sure that the vehicle moves forward when shifting the lever from the N to the D position and reverses when shifting it to the R position.

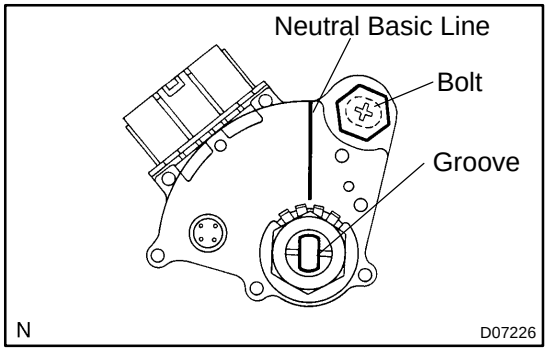

2. INSPECT AND ADJUST PARK/NEUTRAL POSITION

(a) Check that the engine can be started when the shift lever is in the N or P position, but cannot be started in other positions.

If operation cannot be done as stated above, carry out the following adjustment procedures.

- Loosen the park/neutral position switch bolt and set the shift lever to the N position.
- Align the groove with the neutral basic line.
- Hold in position and tighten the bolt.

Torque:13 N·m (130 kgf·cm, 9 ft·lbf)

(b) For continuity inspection of the park/neutral position switch, see page DI–1159.

3. CHECK IDLE SPEED

Idle speed (In N position and air conditioner OFF): 700 ± 50 rpm

DIDX5−01

O/D Main Switch Circuit

CIRCUIT DESCRIPTION

The O/D main switch (transmission control switch) is a momentary type switch. When pressing the O/D main switch once, the O/D OFF indicator light comes on and the ECM prohibits shifting into O/D. When pressing it once again, the O/D OFF indicator light goes off and the ECM allows shifting into O/D. Turning the IG switch OFF will reset the O/D OFF indicator light.

WIRING DIAGRAM

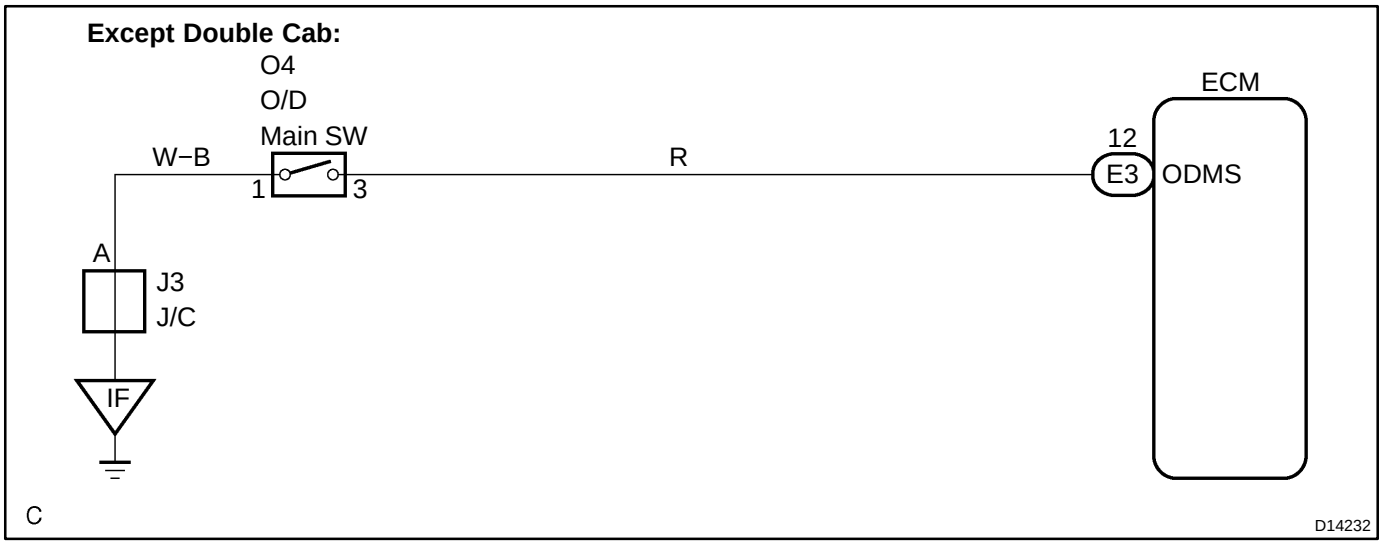

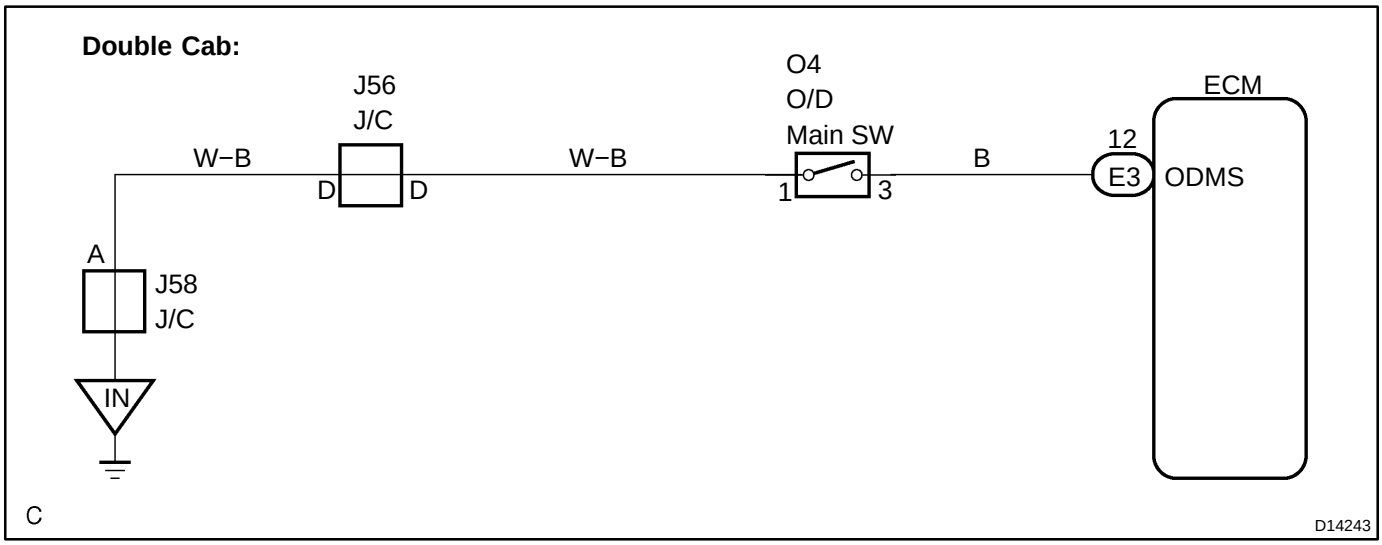

INSPECTION PROCEDURE

1	Check harness and connector (O/D main switch − body ground)

Wire Harness Side:
(Connector Front View):

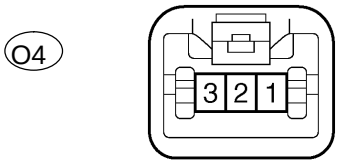

PREPARATION:
Disconnect the O/D main switch connector.

CHECK:
Measure the resistance according to the value(s) in the table below.

OK:

Tester Connection	Specified Condition
1 − Body ground	Below 1 Ω

NG → **Repair or replace the harness or connector (See page IN−30).**

OK

2	Inspect O/D main switch.

Switch Side:
(Connector Front View):

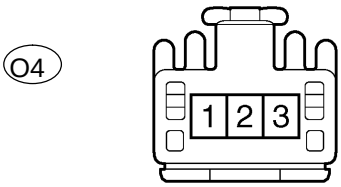

CHECK:
Measure the resistance according to the value(s) in the table below.

OK:

Switch Condition	Tester Connection	Specified Condition
O/D main switch pressed and held	1 − 3	Below 1 Ω
O/D main switch released	↑	10 kΩ or higher

NG → **Replace O/D main switch (See page AT−19).**

OK

3	Check harness and connector (O/D main switch − ECM).

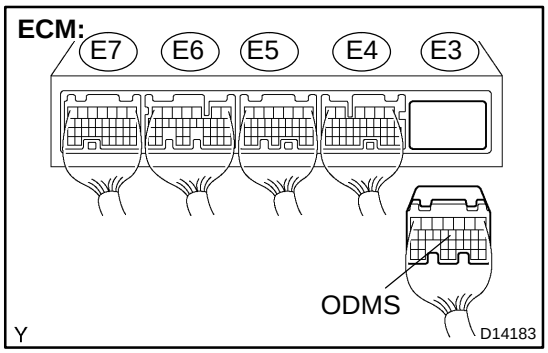

PREPARATION:

(a) Connect the O/D main switch connector.

(b) Disconnect the connector from the ECM.

CHECK:

Measure the resistance according to the value(s) in the table below.

OK:

Switch Condition	Tester Connection	Specified Condition
O/D main switch pressed and held	E3 − 12 (ODMS) − Body ground	Below 1 Ω
O/D main switch released	↑	10 kΩ or higher

NG → **Repair or replace the harness or connector (See page IN−30).**

OK →

Proceed to next circuit inspection shown on matrix chart (See page DI−1136).

DIDWZ−01

DTC	P2714	Pressure Control Solenoid ”D” Performance (Shift Solenoid Valve SLT)

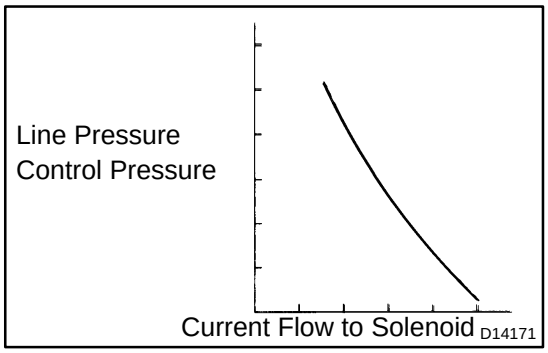

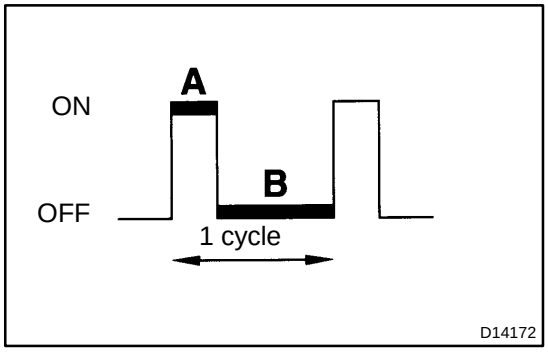

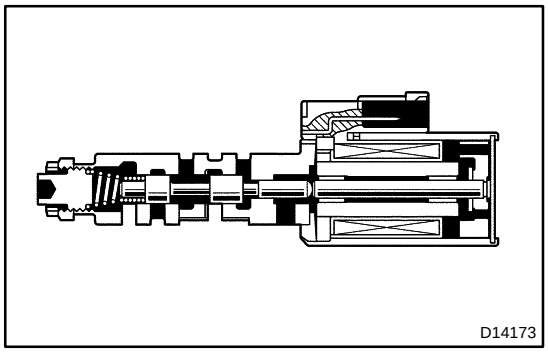

SYSTEM DESCRIPTION

The linear solenoid valve (SLT) controls the transmission line pressure for smooth transmission operation based on signals from the throttle position sensor and the vehicle speed sensor. The ECM adjusts the duty cycle of the SLT solenoid valve to control hydraulic line pressure coming from the primary regulator valve. Appropriate line pressure assures smooth shifting with varying engine outputs.

(*): Duty Ratio

The duty ratio is the ratio of the period of continuity in one cycle. For example, if A is the period of continuity in one cycle, and B is the period of non−continuity, then

Duty Ratio = A/(A + B) x 100 (%)

DTC No.	DTC Detection Condition	Trouble Area
P2714	ECM detects a malfunction on SLT (ON side) according to the revolution difference of the turbine and the output shaft, and also by the oil pressure. (2−trip detection logic)	• Shift solenoid valve SLT remains open or closed • Valve body is blocked • Automatic transmission (clutch, brake or gear, etc.)

MONITOR DESCRIPTION

The ECM calculates the amount of heat absorbed by the friction material based on the difference in revolution (clutch slippage) between the turbine and output shaft. The ECM turns on the MIL and outputs this DTC when the amount of heat absorption exceeds the specified value.

When the shift solenoid valve SLT remains on, oil pressure goes down and clutch engagement force decreases.

NOTE: If you continue driving under these conditions, the clutch will burn out and the vehicle will no longer be drivable.

MONITOR STRATEGY

Related DTCs	P2714	Shift solenoid valve SLT/ON malfunction
Required sensors/Components	Main	Shift solenoid valve SLT
	Sub	Valve body, ATF temperature sensor, Speed sensor (NT), Speed sensor (NO)
Frequency of operation	Continuous	
Duration	Immediate	
MIL operation	2 driving cycles	
Sequence of operation	None	

TYPICAL ENABLING CONDITIONS

Item	Specification	
	Minimum	Maximum
All:		
Turbine speed sensor circuit	Not circuit malfunction	
Output speed sensor circuit	Not circuit malfunction	
Transmission Fluid Temperature Sensor circuit	Not circuit malfunction	
Shift solenoid valve S1 circuit	Not circuit malfunction	
Shift solenoid valve S2 circuit	Not circuit malfunction	
Shift solenoid valve SR circuit	Not circuit malfunction	
Shift solenoid valve SL1 circuit	Not circuit malfunction	
Shift solenoid valve SL2 circuit	Not circuit malfunction	
Shift solenoid valve SLT circuit	Not circuit malfunction	
ECT (Engine coolant temperature) sensor circuit	Not circuit malfunction	
KCS sensor circuit	Not circuit malfunction	
ETCS (Electric throttle control system)	Not system down	
Transmission range	”D”	
ECT	40˚C (104˚F) or more	−
Spark advance from Max. retard timing by KCS control	0˚ CA or more	−
Engine	Starting	
Transfer range	”HIGH”*1	
TFT (transmission fluid temperature)	10˚C or more	−
Transfer range ”HIGH” *1 (This condition is applied only 4WD)		
*1 Following conditions met		
Vehicle speed sensor circuit	Not circuit malfunction	
Output shaft speed sensor circuit	Not circuit malfunction	
Transfer output speed	143 rpm or more	−
NO/NOtf (Transfer input speed/Transfer output speed)	0.9 to 1.1	

TYPICAL MALFUNCTION THRESHOLDS

Detection criteria	Threshold
Summation of C1 clutch heat generations = ∑ (Turbine speed − Output speed x Temporary ratio)	Specified value

WIRING DIAGRAM

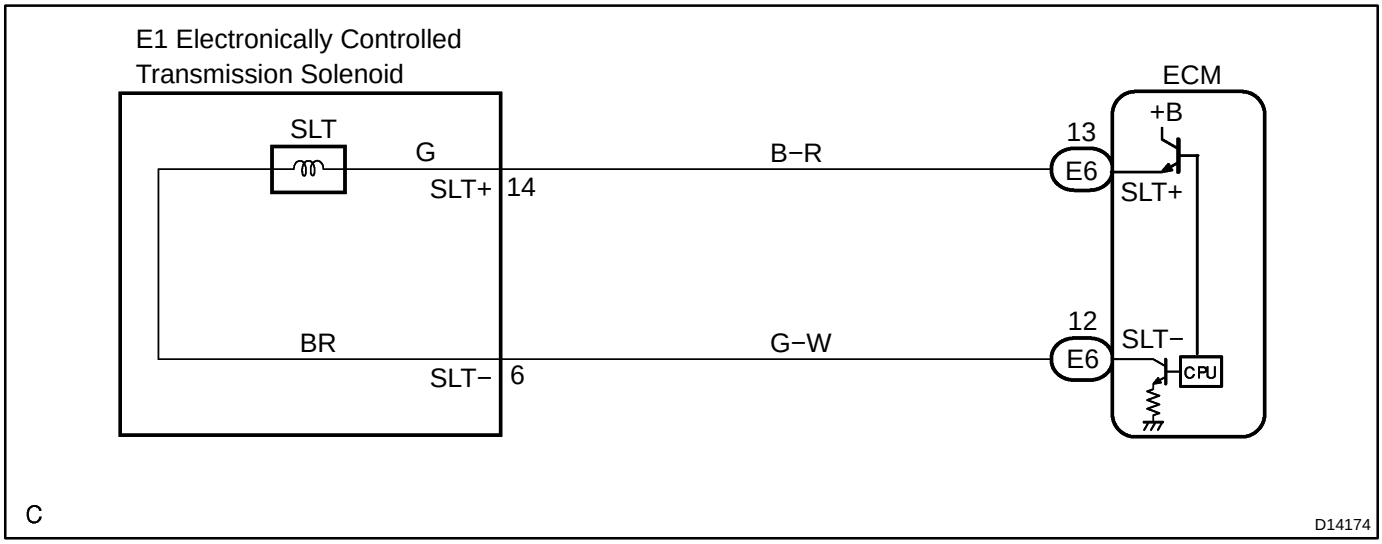

INSPECTION PROCEDURE

HINT:

Performing the ACTIVE TEST using the hand−held tester allows the relay, VSV, actuator and so on to operate without parts removal. Performing the ACTIVE TEST as the first step of troubleshooting is one method to shorten labor time.

It is possible to display the DATA LIST during the ACTIVE TEST.

(a) Warm up the engine.
(b) Turn the ignition switch off.
(c) Connect the hand−held tester to the DLC3.
(d) Turn the ignition switch to the ON position.
(e) Turn on the tester.
(f) Select the item ”DIAGNOSIS / ENHANCED OBD II / ACTIVE TEST”.
(g) According to the display on tester, perform the ”ACTIVE TEST”.

Item	Test Details	Diagnostic Note
LINE PRESS UP *	[Test Details] Operate the shift solenoid SLT and raise the line pressure. [Vehicle Condition] • Vehicle Stopped. • IDL: ON [HINT] OFF: Line pressure up (When the active test of ”Control the Line Pressure Up” is performed, the ECM commands the SLT solenoid to turn off). ON: No action (normal operation)	−

*: ”LINE PRESS UP” in the ACTIVE TEST is performed to check the line pressure changes by connecting the SST to the automatic transaxle, which is used in the HYDRAULIC TEST (See page DI−1123) as well.

HINT:

- The pressure values in ACTIVE TEST and HYDRAULIC TEST are different from each other.
- Normally, the line pressure detected in the ACTIVE TEST is approximately half of the value detected in the HYDRAULIC TEST’s stall test.

1	**Check other DTCs output (in addition to DTC P2714).**

PREPARATION:

(a) Turn the ignition switch off.
(b) Connect the OBD II scan tool or hand−held tester to the DLC3.
(c) Turn the ignition switch to the ON position.
(d) Turn on the tester.
(e) Select the item ”DIAGNOSIS / ENHANCED OBD II / DTC INFO / CURRENT CODES”.

CHECK:

Read the DTCs using the OBD II scan tool or the hand−held tester.

RESULT:

Display (DTC output)	Proceed to
Only ”P2714” is output	A
”P2714” and other DTCs	B

HINT:

If any other codes besides ”P2714” are output, perform troubleshooting for those DTCs first.

B → **Go to DTC chart (See page DI−1156).**

A

2	Inspect shift solenoid valve SLT operation.

Shift Solenoid Valve SLT:

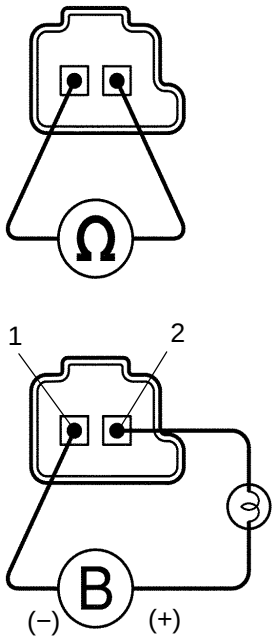

PREPARATION:

Remove the shift solenoid valve SLT (See page AT−12).

CHECK:

Measure the resistance according to the value(s) in the table below.

OK:

Tester Connection	Specified Condition 20°C (68°F)
1 − 2	5.0 to 5.6 Ω

CHECK:

Connect the positive (+) lead with a 21 W bulb to terminal 2 and the negative (−) lead to terminal 1 of the solenoid valve connector, then check the movement of the valve.

OK:

The solenoid makes an operating sound.

NG → **Replace the shift solenoid valve SLT (See page AT−12).**

OK

3	Inspect valve body (See page AT−12).

OK:

There are no foreign objects on each valve.

NG → **Repair or replace valve body.**

OK

Repair or replace transmission (See page AT−34).

DIDX0–01

DTC	P2716	Pressure Control Solenoid ”D” Electrical (Shift Solenoid Valve SLT)

CIRCUIT DESCRIPTION

See page DI–1241

DTC No.	DTC Detection Condition	Trouble Area
P2716	Open or short is detected in shift solenoid valve SLT circuit for 1 second or more while driving (1–trip detection logic).	• Open or short in shift solenoid valve SLT circuit • Shift solenoid valve SLT • ECM

MONITOR DESCRIPTION

When an open or short in the linear solenoid valve (SLT) circuit is detected, the ECM interprets this as a fault. The ECM will turn on the MIL and store the DTC.

MONITOR STRATEGY

Related DTCs	P2716	Shift solenoid valve SLT/Range check
Required sensors/Components	Shift solenoid valve SLT	
Frequency of operation	Continuous	
Duration	1 sec.	
MIL operation	Immediate	
Sequence of operation	None	

TYPICAL ENABLING CONDITIONS

Item	Specification	
	Minimum	Maximum
The monitor will run whenever this DTC is not present.	See page DI–1128	
Solenoid current cut status	Not cut	
Battery voltage	11 V or more	–
CPU command duty ratio to SLT	19% or more	–
Ignition switch	ON	
Starter	OFF	

TYPICAL MALFUNCTION THRESHOLDS

Detection criteria	Threshold
Solenoid status from IC	Fail (Open or short)

COMPONENT OPERATING RANGE

Parameter	Standard value
Output signal duty	Less than 100%

WIRING DIAGRAM

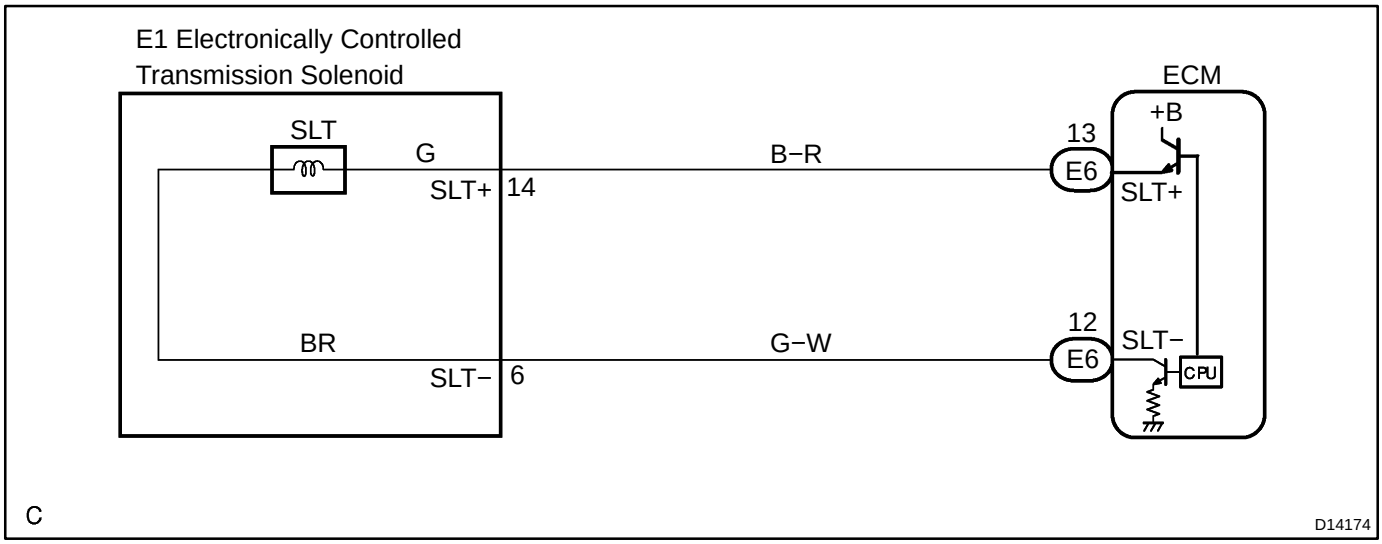

INSPECTION PROCEDURE

1	**Check transmission wire.**

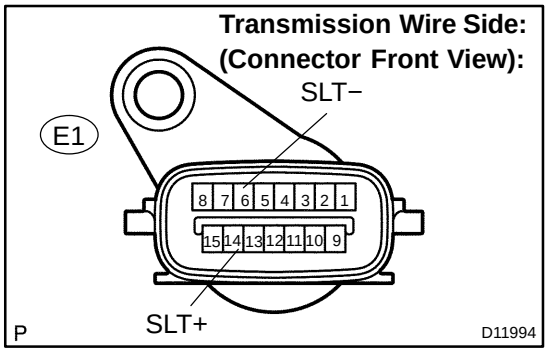

PREPARATION:

Disconnect the transmission wire connector.

CHECK:

Measure the resistance according to the value(s) in the table below.

OK:

Tester Connection	Specified Condition 20°C (68°F)
14 (SLT+) − 6 (SLT−)	5.0 to 5.6 Ω

CHECK:

Measure the resistance according to the value(s) in the table below.

OK:

Tester Connection	Specified Condition
14 (SLT+) − Body ground	10 kΩ or higher
6 (SLT−) − Body ground	↑

NG → **Go to step 3.**

OK

2	Check harness and connector (Transmission wire − ECM)

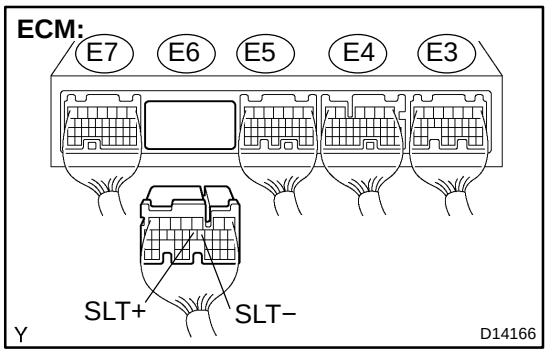

PREPARATION:

(a) Connect the transmission wire connector.

(b) Disconnect the ECM connector.

CHECK:

Measure the resistance according to the value(s) in the table below.

OK:

Tester Connection	Specified Condition 20°C (68°F)
E6 − 13 (SLT+) − E6 − 12 (SLT−)	5.0 to 5.6 Ω

CHECK:

Measure the resistance according to the value(s) in the table below.

OK:

Tester Connection	Specified Condition
E6 − 13 (SLT+) − Body ground	10 kΩ or higher
E6 − 12 (SLT−) − Body ground	↑

NG → **Repair or replace the harness or connector (See page IN−30).**

OK →

Replace the ECM (See page SF−82).

3	Inspect shift solenoid valve SLT.

Shift Solenoid Valve SLT:

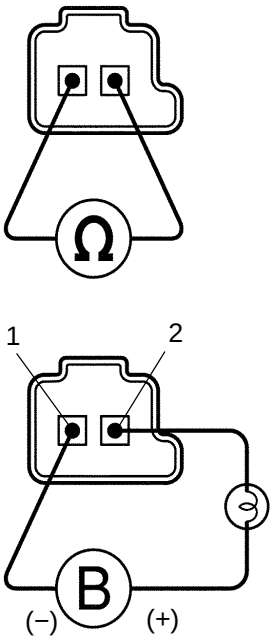

PREPARATION:

Remove the shift solenoid valve SLT (See page AT−12).

CHECK:

Measure the resistance according to the value(s) in the table below.

OK:

Tester Connection	Specified Condition 20°C (68°F)
1 − 2	5.0 to 5.6 Ω

CHECK:

Connect the positive (+) lead with a 21 W bulb to terminal 2 and the negative (−) lead to terminal 1 of the solenoid valve connector, then check the movement of the valve.

OK:

The solenoid makes an operating sound.

NG → **Replace the shift solenoid valve SLT (See page AT−12).**

OK

Repair or replace the transmission wire (See page AT−9).

DIDX1−01

DTC	P2740	Transmission Fluid Temperature Sensor ”B” Circuit

DTC	P2742	Transmission Fluid Temperature Sensor ”B” Circuit Low Input

DTC	P2743	Transmission Fluid Temperature Sensor ”B” Circuit High Input

CIRCUIT DESCRIPTION

ATF (Automatic Transmission Fluid) temperature sensor No.2 is on the transmission and just in front of the oil cooler inlet pipeline.

If ECM detects the abnormally high temperature of ATF by this sensor, it draws driver’s attention by illuminating the warning lamp.

HINT:

- The temperature of ATF easily rises when towing, climbing hills and in traffic, etc.
- If the ATF temperature sensor No.2 becomes short−circuited, the signal that indicates the ATF temperature is 150°C (302°F) or higher is input in ECM.

Vehicle conditions when the sensor is normal and when the sensor is short−circuited are indicated in the table below.

ATF temperature Sensor No.2 State	Detection Condition	Symptom	Recovery Condition
Sensor is normal	• AT fluid temp. more than 150°C (302°F).	• AT Oil Temp. warning light remains on	• AT fluid temp. less than 135°C (275°F). *2
	• AT fluid temp. more than 130°C (266°F).	• Shift point too high.	• AT fluid temp. less than 110°C (230°F).
	When the conditions (a) and (b) are satisfied. (a) AT fluid temp. more than 130°C (266°F). (b) Engine coolant temp. more than 95°C (203°F).	• Lock−up at 3rd gear. *1	• AT fluid temp. less than 110°C (230°F) *2 and engine coolant temp. less than 95°C (203°F).
Sensor is short−circuited	• Any conditions.	• AT Oil Temp. warning light remains on • Shift point too high.	• Symptoms still occur
	• Engine coolant temp. more than 95°C (203°F).	• Lock−up at 3rd gear. *1	• Symptoms still occur

HINT:

*1: When AT fluid temperature is normal, transmission locks up at 5th gear with the shift lever in D position and at 4th gear with the shift lever in 4 position.

*2: When AT fluid temperature is in normal range, it decreases to less than 135°C (275°F) within 5 minutes with the shift lever in P or N position in an idling state.

DTC No.	DTC Detecting Condition	Trouble Area
P2740	(a) and (b) are detected momentarily within 0.5 sec. when neither P2742 nor P2743 is detected (1−trip detection logic) (a) ATF temperature sensor No.2 resistance is less than 25 Ω (0.046 V) (b) ATF temperature sensor No.2 resistance is more than 156 kΩ (4.915 V) HINT: Within 0.5 sec. the malfunction switches from (a) to (b) or from (b) to (a)	• Open or short in ATF temperature sensor No.2 circuit • Transmission wire (ATF temperature sensor No.2) • ECM
P2742	ATF temperature sensor No.2 resistance is less than 25 Ω (0.046 V) for 0.5 sec. or more (1−trip detection logic)	• Short in ATF temperature sensor No.2 circuit • Transmission wire (ATF temperature sensor No.2) • ECM
P2743	ATF temperature No.2 sensor resistance is more than 156 kΩ (4.915 V) when 15 minutes or more after the engine start DTC is detected for 0.5 sec. or more (1−trip detection logic)	• Open in ATF temperature sensor No.2 circuit • Transmission wire (ATF temperature sensor No.2) • ECM

MONITOR DESCRIPTION

The Automatic Transmission Fluid (ATF) temperature sensor converts ATF temperature to an electrical resistance value. Based on the resistance, the ECM determines the ATF temperature, and the ECM detects an open or short in the AFT temperature circuit. If the resistance value of the ATF temperature is less than 25 Ω (0.046 V) or more than 156 kΩ (4.915 V), the ECM interprets this as a fault in the ATF sensor or wiring. The ECM will turn on the MIL and store the DTC.

MONITOR STRATEGY

Related DTCs	P2740	ATF temperature sensor/Range check (Fluttering)
	P2742	ATF temperature sensor/Range check (Low voltage)
	P2743	ATF temperature sensor/Range check (High voltage)
Required sensors/Components	ATF temperature sensor (TFT sensor)	
Frequency of operation	Continuous	
Duration	0.5 sec.	
MIL operation	Immediate	
Sequence of operation	None	

TYPICAL ENABLING CONDITIONS

Item	Specification	
	Minimum	Maximum
The monitor will run whenever these DTCs are not present.	See page DI−1128	
Range check (Fluttering, Low voltage)		
The typical enabling condition is not available.	−	
Range check (High voltage)		
Time after engine start	15 min. or more	−

TYPICAL MALFUNCTION THRESHOLDS

Detection criteria	Threshold
Range check (Fluttering)	
TFT (transmission fluid temperature) sensor voltage	Less than 0.046 V or More than 4.915 V
Range check (Low voltage)	
TFT (transmission fluid temperature) sensor voltage	Less than 0.046 V
Range check (High voltage)	
TFT (transmission fluid temperature) sensor voltage	More than 4.915 V

COMPONENT OPERATING RANGE

Parameter	Standard value
TFT (transmission fluid temperature) sensor	Atmospheric temperature to approx. 130˚C (266˚F)

WIRING DIAGRAM

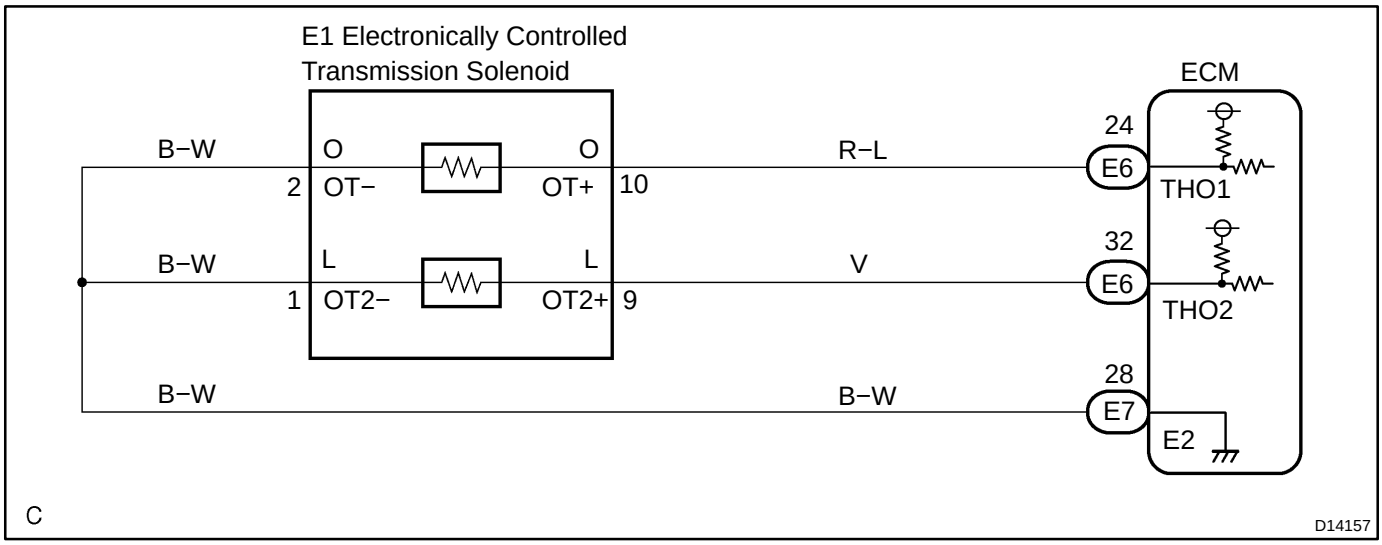

INSPECTION PROCEDURE

HINT:

According to the DATA LIST displayed by the OBD II scan tool or hand−held tester, you can read the value of the switch, sensor, actuator and so on without parts removal. Reading the DATA LIST as the first step of troubleshooting is one method to shorten labor time.

(a) Warm up the engine.
(b) Turn the ignition switch off.
(c) Connect the OBD II scan tool or hand−held tester to the DLC3.
(d) Turn the ignition switch to the ON position.
(e) Push the ”ON” button of the OBD II scan tool or the hand−held tester.
(f) When you use the hand−held tester:
Select the item ”DIAGNOSIS / ENHANCED OBD II / DATA LIST”.
(g) According to the display on the tester, read the ”DATA LIST”.

Item	Measurement Item/ Range (display)	Normal Condition
AT FLUID TEMP 2	ATF Temp. Sensor Value/ min.: −40°C (−40°F) max.: 215°C (419°F)	• After Stall Test; Approx. 80°C (176°F) • Equal to ambient temperature when cold soak

HINT:

When DTC P2742 is output and hand−held tester output is 150°C (302°F) or more, there is a short circuit.
When DTC P2743 is output and hand−held tester output is −40°C (−40°F), there is an open circuit.
Measure the resistance between terminal THO2 (OT2) and body ground.

Temperature Displayed	Malfunction
−40˚C (−40˚F)	Open circuit
150˚C (302˚F) or more	Short circuit

1	Inspect transmission wire (ATF temperature sensor No.2)

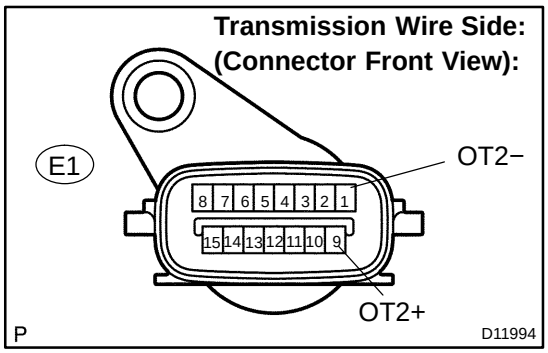

PREPARATION:

Disconnect the transmission wire connector from the transmission.

CHECK:

Measure the resistance according to the value(s) in the table below.

OK:

Tester Connection	Specified Condition
1 (OT2−) − 9 (OT2+)	25 Ω to 156 kΩ
1 (OT2−) − Body ground	10 kΩ or higher
9 (OT2+) − Body ground	10 kΩ or higher

HINT:

If the resistance is out of the specified range with either the ATF temperature shown in the table below, the driveability of the vehicle may decrease.

ATF Temperature	Specified Condition
20°C (68°F)	3 to 4 kΩ
110°C (230°F)	0.22 to 0.28 kΩ

NG → **Repair or replace the transmission wire (ATF temperature sensor No.2) (See page AT−9).**

OK →

2	Check harness and connector (Transmission wire − ECM)

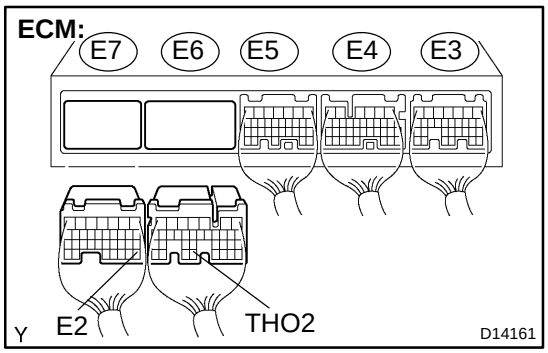

PREPARATION:

(a) Connect the transmission wire connector.

(b) Disconnect the connector of the ECM.

CHECK:

Measure the resistance according to the value(s) in the table below.

OK:

Tester Connection	Specified Condition
E6 − 32 (THO2) − E7 − 28 (E2)	25 Ω to 156 kΩ

CHECK:

Measure the resistance according to the value(s) in the table below.

OK:

Tester Connection	Specified Condition
E6 − 32 (THO2) − Body ground	10 kΩ or higher
E7 − 28 (E2) − Body ground	↑

NG → **Repair or replace the harness or connector (See page IN−30).**

OK

Replace the ECM (See page SF−82).

DIDX2−01

DTC	P2757	Torque Converter Clutch Pressure Control Solenoid Performance(Shift Solenoid Valve SLU)

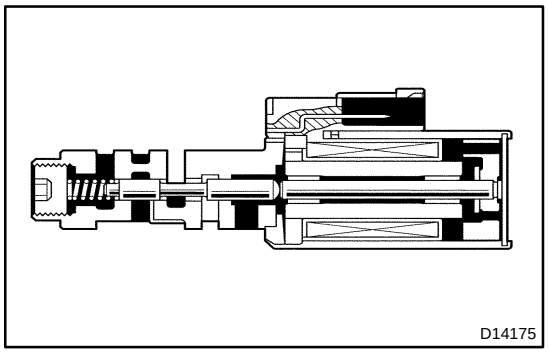
D14175

SYSTEM DESCRIPTION

The ECM uses the signals from the throttle position sensor, Air−flow meter, turbine (input) speed sensor, output speed sensor and crankshaft position sensor to monitor the engagement condition of the lock−up clutch.

Then the ECM compares the engagement condition of the lock−up clutch with the lock−up schedule in the ECM memory to detect a mechanical problems of the shift solenoid valve SLU, valve body and torque converter clutch.

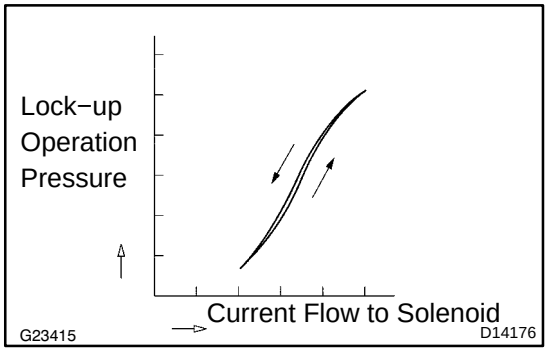

DTC No.	DTC Detection Condition	Trouble Area
P2757	Lock−up does not occur when driving in the lock−up range (normal driving at 80 km/h [50 mph]), or lock−up remains ON in the lock−up OFF range. (2−trip detection logic)	• Shift solenoid valve SLU remains open or closed • Valve body is blocked • Torque converter clutch • Automatic transmission (clutch, brake or gear, etc.) • Line pressure is too low

MONITOR DESCRIPTION

Torque converter lock−up is controlled by the ECM based on the turbine (input) speed sensor NT, output speed sensor SP2, engine rpm, engine load, engine temperature, vehicle speed, transmission temperature, and gear selection. The ECM determines the lock−up status of the torque converter by comparing the engine rpm (NE) to the input turbine rpm (NT). The ECM calculates the actual transmission gear by comparing input turbine rpm (NT) to output shaft rpm (SP2). When conditions are appropriate, the ECM requests ”lock−up” by applying control voltage to the shift solenoid SLU. When the SLU is turned on, it applies pressure to the lock−up relay valve and locks the torque converter clutch.

If the ECM detects no lock−up after lock−up has been requested or if it detects lock−up when it is not requested, the ECM interprets this as a fault in the shift solenoid valve SLU or lock−up system performance. The ECM will turn on the MIL and store the DTC.

Example:

When any of the following is met, the system judges it as a malfunction.

(a) There is a difference in rotation between the input side (engine speed) and output side (input turbine speed) of the torque converter when the ECM commands lock−up.
(Engine speed is at least 70 rpm greater than input turbine speed.)

(b) There is no difference in rotation between the input side (engine speed) and output side (input turbine speed) of the torque converter when the ECM commands lock−up off.
(The difference between engine speed and input turbine speed is less than 35 rpm.)

MONITOR STRATEGY

Related DTCs	P2757	Shift solenoid valve SLU/OFF malfunction
		Shift solenoid valve SLU/ON malfunction
Required sensors/Components	Main	Shift solenoid valve SLU
	Sub	Valve body, Vehicle speed sensor, Throttle position sensor, Speed sensor (NT), Speed sensor (NO)
Frequency of operation	Continuous	
Duration	OFF malfunction (A)	2 sec.
	OFF malfunction (B)	0.4 sec.
	ON malfunction	1.8 sec.
MIL operation	2 driving cycles	
Sequence of operation	None	

TYPICAL ENABLING CONDITIONS

Item	Specification	
	Minimum	Maximum
All:		
Turbine speed sensor circuit	Not circuit malfunction	
Output speed sensor circuit	Not circuit malfunction	
Shift solenoid valve S1 circuit	Not circuit malfunction	
Shift solenoid valve S2 circuit	Not circuit malfunction	
Shift solenoid valve SR circuit	Not circuit malfunction	
Torque converter clutch pressure control solenoid circuit	Not circuit malfunction	
KCS sensor circuit	Not circuit malfunction	
ETCS (Electric throttle control system)	Not system down	
Transmission range	”D”	

ECT (Engine coolant temperature)	40˚C (104˚F) or more	−
Spark advance from Max. retard timing by KCS control	0˚ CA or more	−
Engine	Starting	
ECM selected gear	4th or 5th	
Vehicle speed	25 km/h (15.5 mph) or more	−
Shift solenoid valve S1 circuit	Not on malfunction	
Shift solenoid valve S2 circuit	Not on malfunction	
Shift solenoid valve SL2 circuit	Not on malfunction	
1−2 Shift valve	Not on malfunction	
Transfer neutral position switch	OFF	
Transfer range	”HIGH”*1	
Transfer range ”HIGH” *1 (This condition is applied only 4WD)		
*1 Following conditions met		
Vehicle speed sensor circuit	Not circuit malfunction	
Output shaft speed sensor circuit	Not circuit malfunction	
Transfer output speed	143 rpm or more	−
NO/NOtf (Transfer input speed/Transfer output speed)	0.9 to 1.1	
OFF malfunction (A)		
ECM lock−up command	ON (SLU pressure: 513kpa or more)	
Vehicle speed	−	Less than 100 km/h (62.2 mph)
OFF malfunction (B)		
ECM selected gear	2nd	
Vehicle speed	2 km/h (1.2 mph) or more	−
Output speed	2nd → 1st down shift point or more	−
Throttle valve opening angle	7.0% or more at 2,000 rpm (Conditions vary with engine speed)	−
ON malfunction		
ECM lock−up command	OFF (SLU pressure: less than 4kpa)	
Throttle valve opening angle	9% or more	−
Vehicle speed	−	Less than 60 km/h (37.3 mph)

TYPICAL MALFUNCTION THRESHOLDS

Detection criteria	Threshold
Both of the following conditions are met: OFF malfunctions (A) and (B)	
OFF malfunction (A)	
Engine speed − Turbine speed	70 rpm or more
OFF malfunction (B)	
Turbine speed/Output speed	Not 3.30 to 7.50
ON malfunction	
2 detections are necessary per driving cycle 1st detection; temporary flag ON 2nd detection; pending fault code ON	
Vehicle speed must be under 8 km/h (5 mph) once before 2nd detection	
Difference between engine speed and turbine speed	Less then 35 rpm

INSPECTION PROCEDURE

HINT:

Performing the ACTIVE TEST using the hand−held tester allows the relay, VSV, actuator and so on to operate without parts removal. Performing the ACTIVE TEST as the first step of troubleshooting is one method to shorten labor time.

It is possible to display the DATA LIST during the ACTIVE TEST.

(a) Warm up the engine.
(b) Turn the ignition switch off.
(c) Connect the hand−held tester to the DLC3.
(d) Turn the ignition switch to the ON position.
(e) Turn on the tester.
(f) Select the item ”DIAGNOSIS / ENHANCED OBD II / ACTIVE TEST”.
(g) According to the display on the tester, perform the ”ACTIVE TEST”.

Item	Test Details	Diagnostic Note
LOCK UP	[Test Details] Control the shift solenoid SLU to set the automatic transmission to the lock−up condition. [Vehicle Condition] • Throttle valve opening angle: Less than 35 % • Vehicle Speed: 60 km/h (37 mph) or more	Possible to check the SLU operation.

HINT:

- This test can be conducted when the vehicle speed is 60 km/h (37 mph) or more.
- This test can be conducted in the 5th gear.
- Lightly depress the accelerator pedal and check that the engine speed does not change abruptly.

HINT:

- When changing the accelerator pedal opening angle while driving, if the engine speed does not change, lock−up is on.
- Slowly release, but not fully, the accelerator pedal in order to decelerate. (Fully releasing the pedal will close the throttle valve and lock−up may be turned off automatically.)

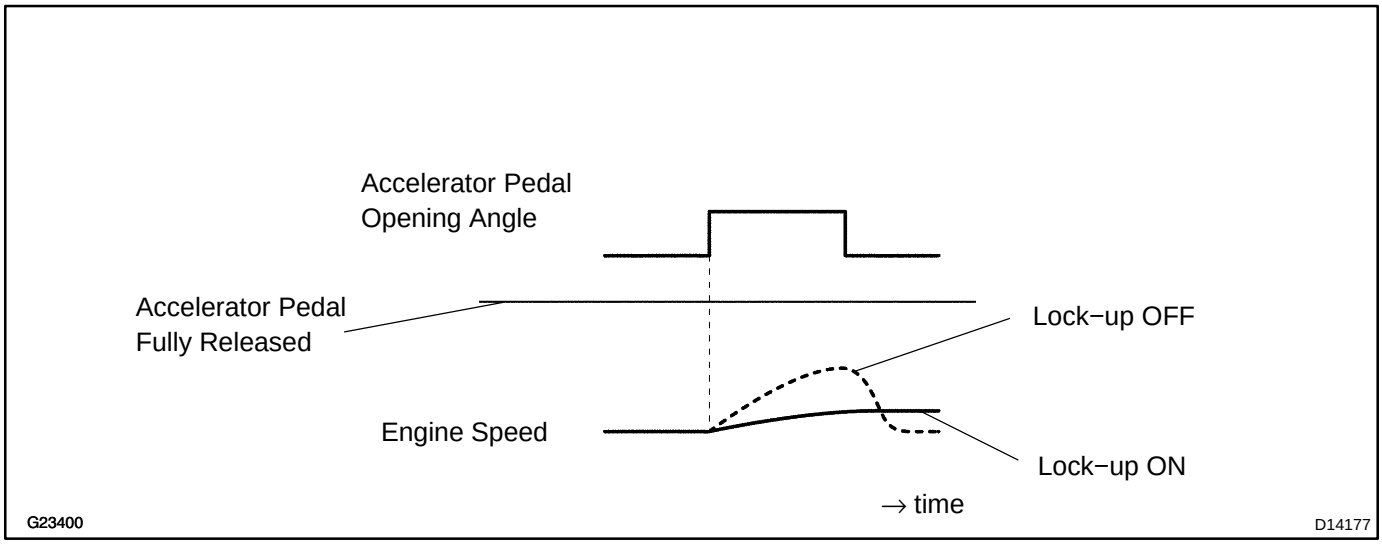

1	**Check other DTCs output (in addition to DTC P2757).**

PREPARATION:

(a) Turn the ignition switch off.
(b) Connect the OBD II scan tool or hand−held tester to the DLC3.
(c) Turn the ignition switch to the ON position.
(d) Turn on the tester.
(e) Select the item ”DIAGNOSIS / ENHANCED OBD II / DTC INFO / CURRENT CODES”.

CHECK:

Read the DTCs using the OBD II scan tool or the hand−held tester.

RESULT:

Display (DTC output)	Proceed to
Only ”P2757” is output	A
”P2757” and other DTCs	B

HINT:

If any other codes besides ”P2757” are output, perform troubleshooting for those DTCs first.

B → **Go to DTC chart (See page DI−1156).**

A

2	Check shift solenoid valve SLU operation.

Shift Solenoid Valve SLU:

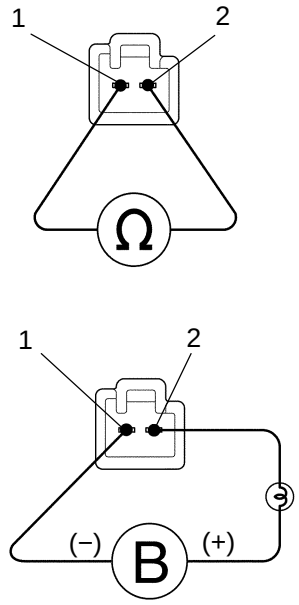

D12795

PREPARATION:

Remove the shift solenoid valve SLU (See page AT−12).

CHECK:

Measure the resistance according to the value(s) in the table below.

OK:

Tester Connection	Specified Condition 20°C (68°F)
1 − 2	5.0 to 5.6 Ω

CHECK:

Connect the positive (+) lead with a 21 W bulb to terminal 2 and the negative (−) lead to terminal 1 of the solenoid valve connector, then check the movement of the valve.

OK:

The solenoid makes an operating sound.

NG → **Replace the shift solenoid valve SLU (See page AT−12).**

OK

3	Inspect valve body (See page AT−12).

OK:

There are no foreign objects on each valve.

NG → **Repair or replace valve body.**

OK

4	Check torque converter clutch (See page AT−39).

OK:

The torque converter clutch operates normally.

NG → Replace the torque converter clutch.

OK →

Repair or replace transmission (See page AT−34).

DIDX3−01

DTC	P2759	Torque Converter Clutch Pressure Control Solenoid Control Circuit Electrical(Shift Solenoid Valve SLU)

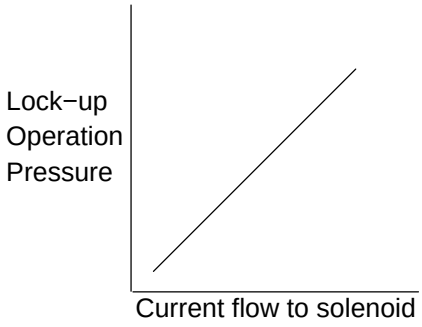

CIRCUIT DESCRIPTION

The amount of current flow to the solenoid is controlled by the (*) duty ratio of the ECM output signal. The higher the duty ratio becomes, the higher the lock−up hydraulic pressure becomes during the lock−up operation.

(*) Duty Ratio

The duty ratio is the ratio of the period of continuity in one cycle. For example, if A is the period of continuity in one cycle, and B is the period of non−continuity, then

Duty Ratio = A/(A + B) x 100 (%)

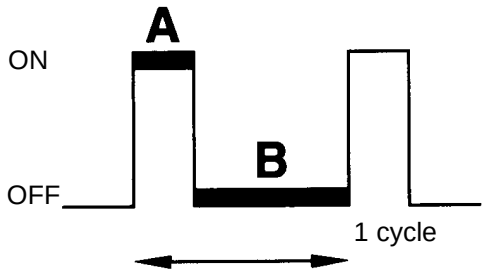

BE4056

D00160

DTC No.	DTC detection condition	Trouble Area
P2759	Open or short is detected in shift solenoid valve SLU circuit for 1 second or more while driving (1−trip detection logic).	• Open or short in shift solenoid valve SLU circuit • Shift solenoid valve SLU • ECM

MONITOR DESCRIPTION

When an open or short in a shift solenoid valve (SLU) circuit is detected, the ECM determines there is a malfunction. The ECM will turn on the MIL and store this DTC.

MONITOR STRATEGY

Related DTCs	P2759	Shift solenoid valve SLU/Range check
Required sensors/Components	Shift solenoid valve SLU	
Frequency of operation	Continuous	
Duration	1 sec.	
MIL operation	Immediate	
Sequence of operation	None	

TYPICAL ENABLING CONDITIONS

Item	Specification	
	Minimum	Maximum
The monitor will run whenever this DTC is not present.	See page DI−1128	
Solenoid current cut status	Not cut	
CPU commanded duty	19% or more	−
Battery voltage	11 V or more	−
Ignition switch	ON	
Starter	OFF	

TYPICAL MALFUNCTION THRESHOLDS

Detection criteria	Threshold
Solenoid status from IC	Fail (Open or short)

COMPONENT OPERATING RANGE

Parameter	Standard value
Output signal duty	Less than 100%

WIRING DIAGRAM

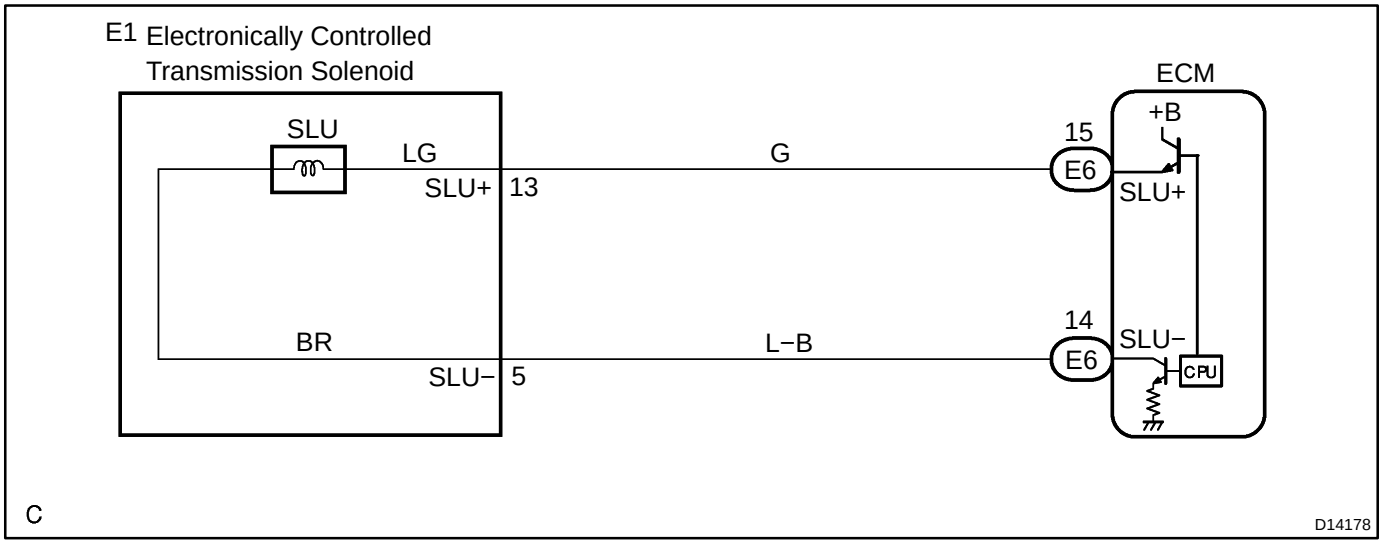

INSPECTION PROCEDURE

1	**Inspect transmission wire.**

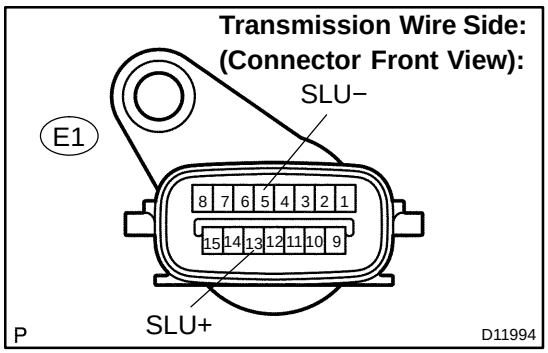

PREPARATION:

Disconnect the transmission wire connector.

CHECK:

Measure the resistance according to the value(s) in the table below.

OK:

Tester Connection	Specified Condition 20°C (68°F)
13 (SLU+) − 5 (SLU−)	5.0 to 5.6 Ω

CHECK:

Measure the resistance according to the value(s) in the table below.

OK:

Tester Connection	Specified Condition
13 (SLU+) − Body ground	10 kΩ or higher
5 (SLU−) − Body ground	↑

NG → **Go to step 3.**

OK

2	Check harness and connector (Transmission wire − ECM)

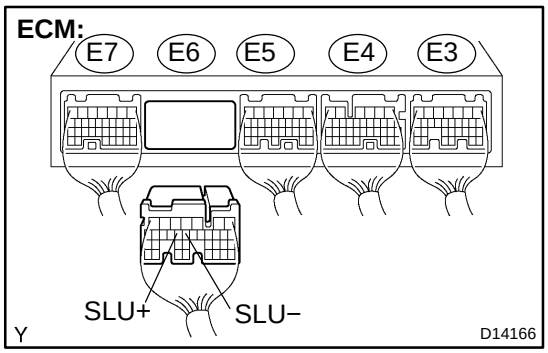

PREPARATION:

(a) Connect the transmission wire connector.

(b) Disconnect the ECM connector.

CHECK:

Measure the resistance according to the value(s) in the table below.

OK:

Tester Connection	Specified Condition 20°C (68°F)
E6 − 15 (SLU+) − E6 − 14 (SLU−)	5.0 to 5.6 Ω

CHECK:

Measure the resistance according to the value(s) in the table below.

OK:

Tester Connection	Specified Condition
E6 − 15 (SLU+) − Body ground	10 kΩ or higher
E6 − 14 (SLU−) − Body ground	↑

NG → **Repair or replace the harness or connector (See page IN−30).**

OK →

Replace the ECM (See page SF−82).

3	Inspect shift solenoid valve SLU.

Shift Solenoid Valve SLU:

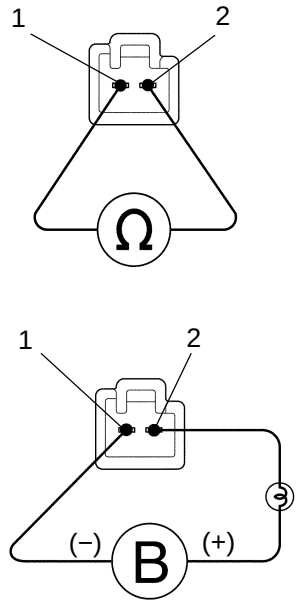

D12795

PREPARATION:

Remove the shift solenoid valve SLU (See page AT−12).

CHECK:

Measure the resistance according to the value(s) in the table below.

OK:

Tester Connection	Specified Condition 20°C (68°F)
1 − 2	5.0 to 5.6 Ω

CHECK:

Connect the positive (+) lead with a 21 W bulb to terminal 2 and the negative (−) lead to terminal 1 of the solenoid valve connector, then check the movement of the valve.

OK:

The solenoid makes an operating sound.

NG → **Replace the shift solenoid valve SLU (See page AT−12).**

OK

Repair or replace the transmission wire (See page AT−9).

DIDX4−01

DTC	P2772	Transfer L4 SW Circuit

CIRCUIT DESCRIPTION

The ECM detects the signal from the transfer L4 position switch.
This DTC indicates that the transfer L4 position switch remains ON.

DTC No.	DTC Detecting Condition	Trouble Area
P2772	Transfer L4 position switch remains ON while vehicle running under conditions for 1.8 seconds or more (1−trip detection logic) (a) Output shaft speed 3000 rpm or less (b) Transfer shift position is H	• Short in transfer L4 position switch circuit • Transfer L4 position switch • ECM

MONITOR DESCRIPTION

The ECM monitors the transfer−case L4 position switch to determine when the transfer−case L4 gear is engaged. If the transfer−case L4 gears remain engaged under the following conditions, the ECM will conclude that there is a malfunction of the L4 position switch:

- L4 switch indicated that the L4 transfer−case gears are engaged.
- Transfer−case shifter is in the ”H” position.
- Transfer−case output shaft rpm is between 750 and 3,000 rpm.
- The specified time period has elapsed.

If all of the above conditions are detected, the ECM will conclude that there is a malfunction of the L4 switch, and illuminate the MIL and store the DTC.

MONITOR STRATEGY

Related DTCs	P2772	Transfer L4 position switch/ON malfunction
Required sensors/Components	Transfer L4 position switch	
Frequency of operation	Continuous	
Duration	ON malfunction (A)	1.8 sec.
	ON malfunction (B)	0.5 sec.
MIL operation	1 driving cycle	
Sequence of operation	None	

TYPICAL ENABLING CONDITIONS

Item	Specification	
	Minimum	Maximum
All:		
Output speed sensor circuit	Not circuit malfunction	
Vehicle speed sensor circuit	Not circuit malfunction	
Transfer neutral position switch	OFF	
ON malfunction (A)		
Output speed (Transfer output speed)	1,000 to 3,000 rpm	
ON malfunction (B)		
Output speed (Transfer output speed)	143 rpm or more	−

TYPICAL MALFUNCTION THRESHOLDS

Detection criteria	Threshold
Both of the following conditions is met: ON malfunctions (A) and (B)	
ON malfunction (A)	
L4 switch	ON
ON malfunction (B)	
Actual Transfer gear ratio Transfer input speed/Transfer output speed	0.9 to 1.1

WIRING DIAGRAM

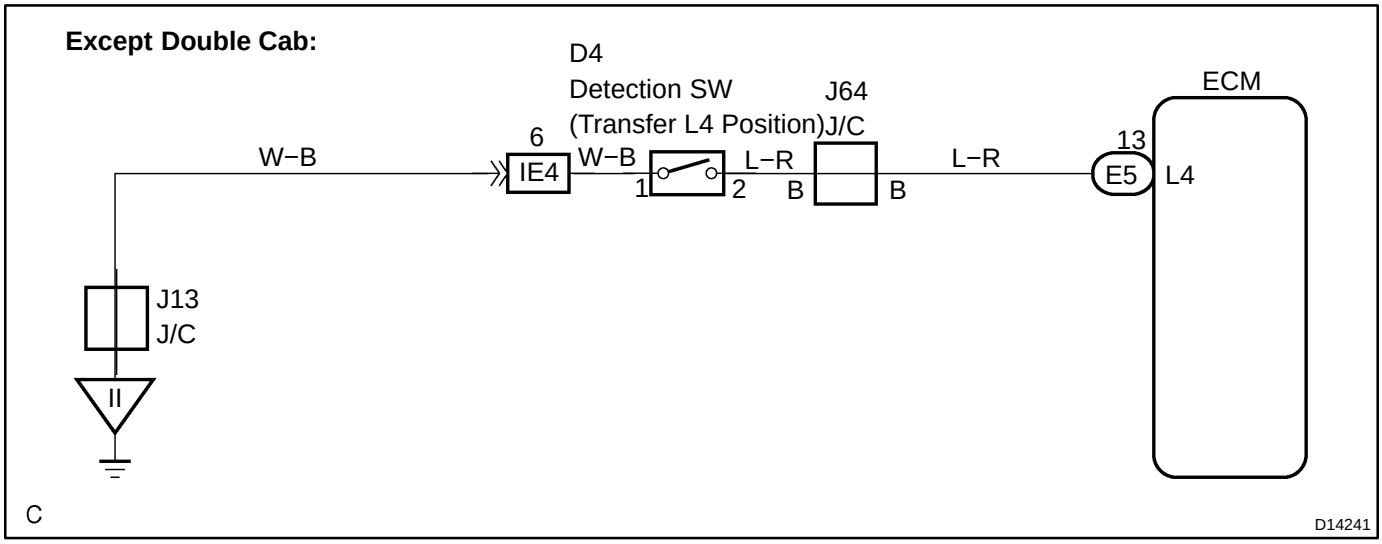

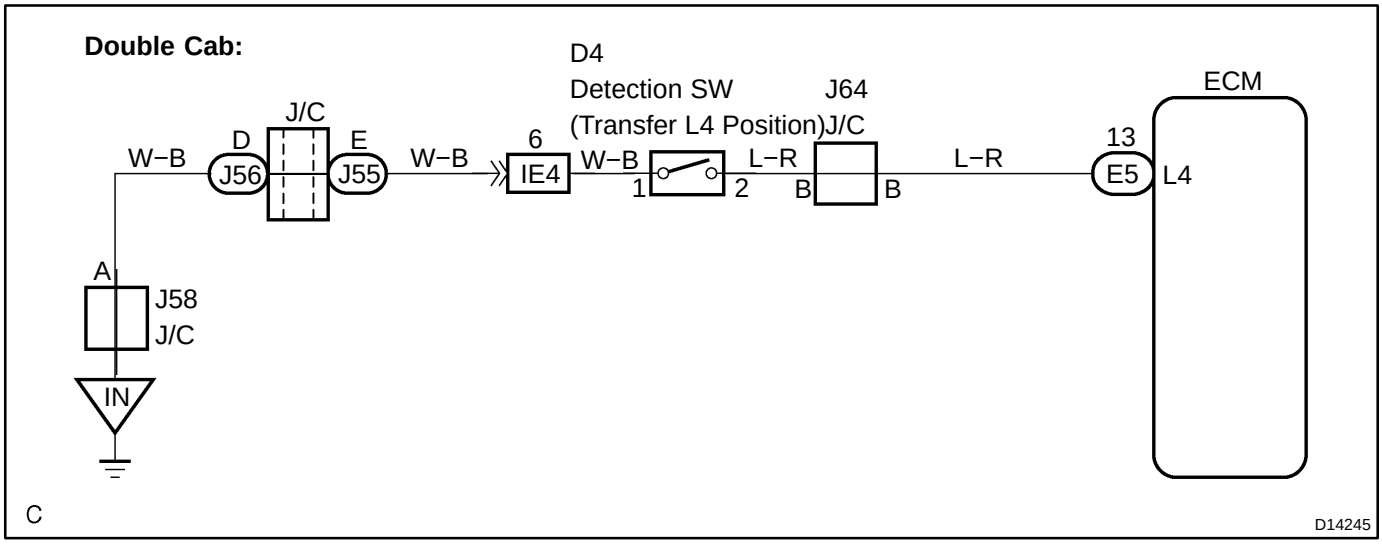

INSPECTION PROCEDURE

1	Check harness and connector (transfer L4 position switch − body ground).

Wire Harness Side:
(Connector Front View):

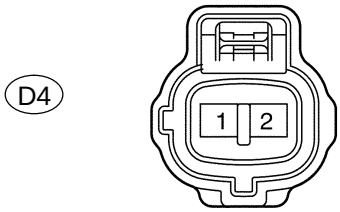

PREPARATION:
Disconnect the transfer position L4 switch connector.
CHECK:
Measure the resistance according to the value(s) in the table below.
OK:

Tester Connection	Specified Condition
1 − Body ground	Below 1 Ω

NG → **Repair or replace the harness or connector (See page IN−30).**

OK

2	Inspect transfer L4 position switch.

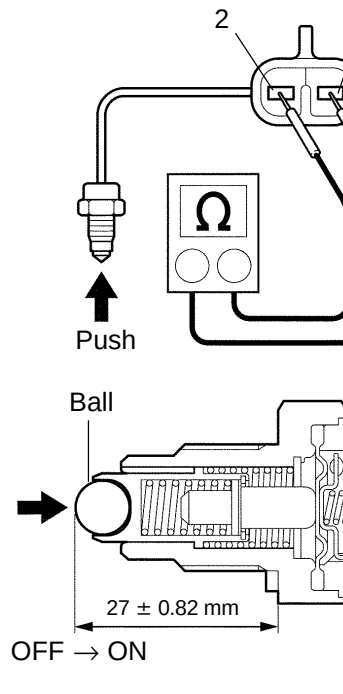

PREPARATION:
Remove the transfer position L4 switch.
CHECK:
Measure the resistance according to the value(s) in the table below.
OK:

Switch position	Tester Connection	Specified Condition
Free	1 − 2	10 kΩ or higher
Pushed in	↑	Below 1 Ω

NG → **Replace the transfer L4 position switch.**

OK

3	Check harness and connector (transfer L4 position switch − ECM).

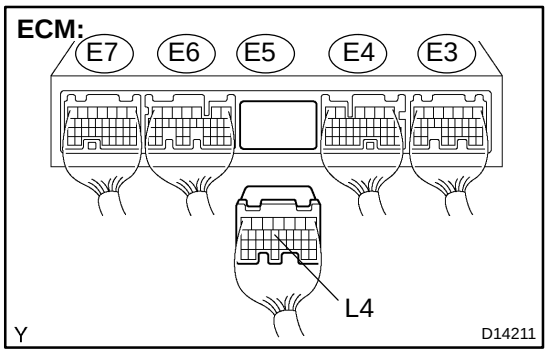

PREPARATION:

Disconnect the connector from the ECM.

CHECK:

Measure the resistance according to the value(s) in the table below.

OK:

Tester Connection	Specified Condition
E5 − 13 (L4) − D4 − 2 (L4)	Below 1 Ω

CHECK:

Measure the resistance according to the value(s) in the table below.

OK:

Tester Connection	Specified Condition
E5 − 13 (L4) − Body ground	10 kΩ or higher

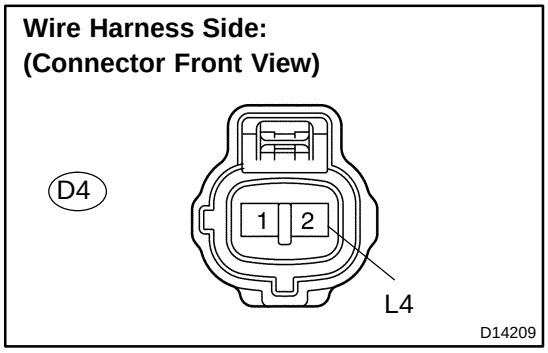

NG → **Repair or replace the harness or connector (See page IN−30).**

OK →

Replace the ECM (See page SF−82).

DIDWJ−01

CIRCUIT INSPECTION

DTC	P0705	Transmission Range Sensor Circuit Malfunction (PRNDL Input)

CIRCUIT DESCRIPTION

The park/neutral position switch detects the shift lever position and sends signals to the ECM.

DTC No.	DTC Detection Condition	Trouble Area
P0705	(2−trip detection logic) • All switches are OFF simultaneously for NSW, R, N, D, 3 and 2 positions. • 2 or more switches are ON simultaneously for NSW, R, D, 3 and 2 positions.	• Open or short in park/neutral position switch circuit • Park/neutral position switch • ECM

MONITOR DESCRIPTION

These DTCs indicate a problem with the park/neutral position switch and the wire harness in the park/neutral position switch circuit.
The park/neutral position switch detects the shift lever position and sends a signal to the ECM.
For security, the park/neutral position switch detects the shift lever position so that engine can be started only when the shift lever is in the P or N position.
The park/neutral position switch sends a signal to the ECM according to the shift position (NSW, R, D, 3 or 2).
The ECM determines that there is a problem with the switch or related parts if it receives more than 1 position signal simultaneously. The ECM will turn on the MIL and store the DTC.

MONITOR STRATEGY

Related DTCs	P0705	Park/neutral position switch/Verify switch input
Required sensors/Components	Park/neutral position switch	
Frequency of operation	Continuous	
Duration	Condition (A)	2 sec.
	Condition (B)	60 sec.
MIL operation	2 driving cycle	
Sequence of operation	None	

TYPICAL ENABLING CONDITIONS

Item	Specification	
	Minimum	Maximum
The monitor will run whenever this DTC is not present.	See page DI−1128	
Ignition switch	ON	
Battery voltage	10.5 V or more	

TYPICAL MALFUNCTION THRESHOLDS

Detection criteria	Threshold
One of the following conditions is met: Condition (A) or (B)	
Condition (A)	
Number of the following signal input at the same time	2 or more
NSW switch	ON
R switch	
D switch	
3 switch	
2 switch	
Condition (B)	
All of following conditions are met	
N switch	OFF
NSW switch	
R switch	
D switch	
3 switch	
2 switch	

COMPONENT OPERATING RANGE

Parameter	Standard value
Park/neutral position switch	The park/neutral position switch sends only one signal to the ECM.

WIRING DIAGRAM

Double Cab:

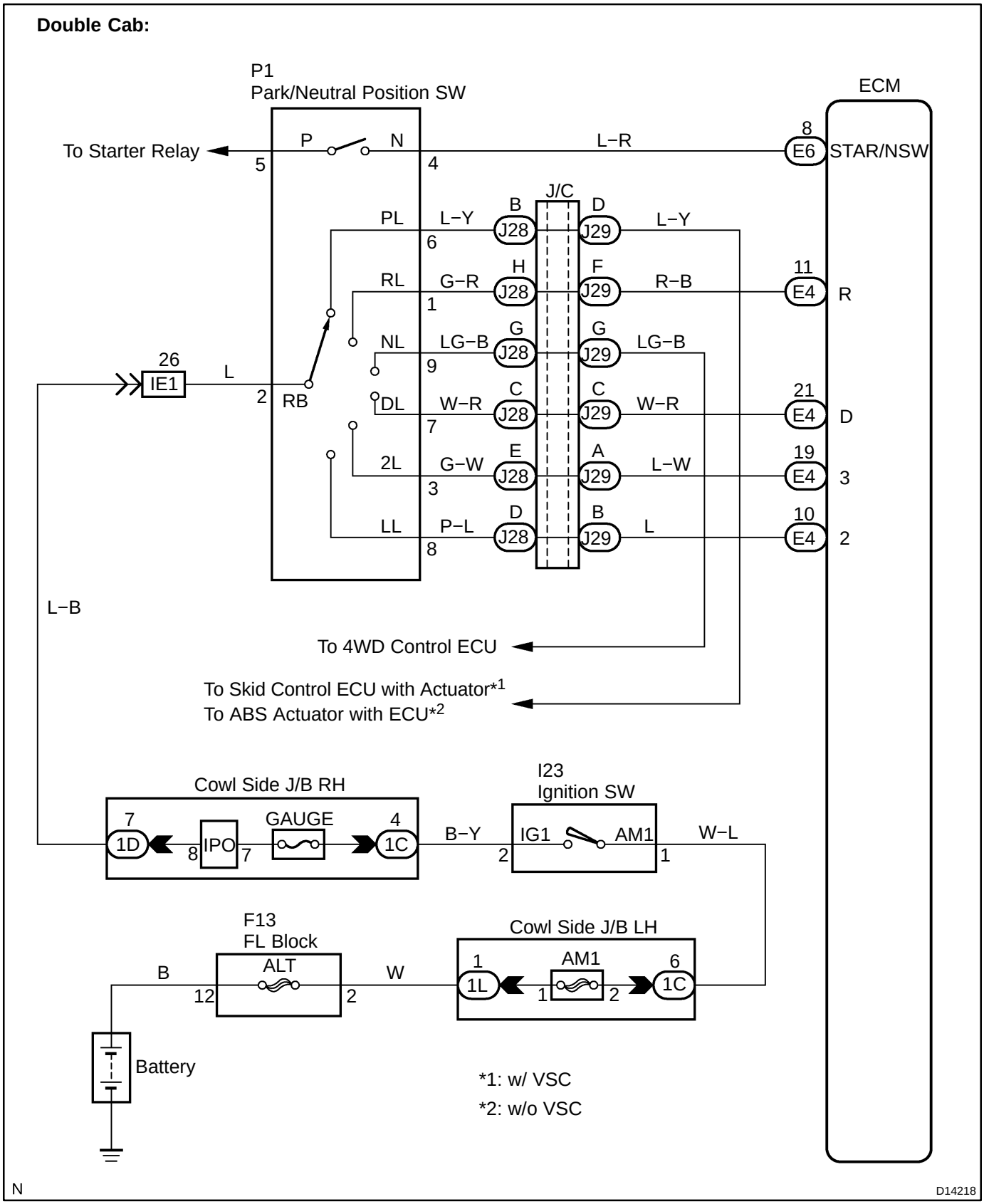

Except Double Cab:

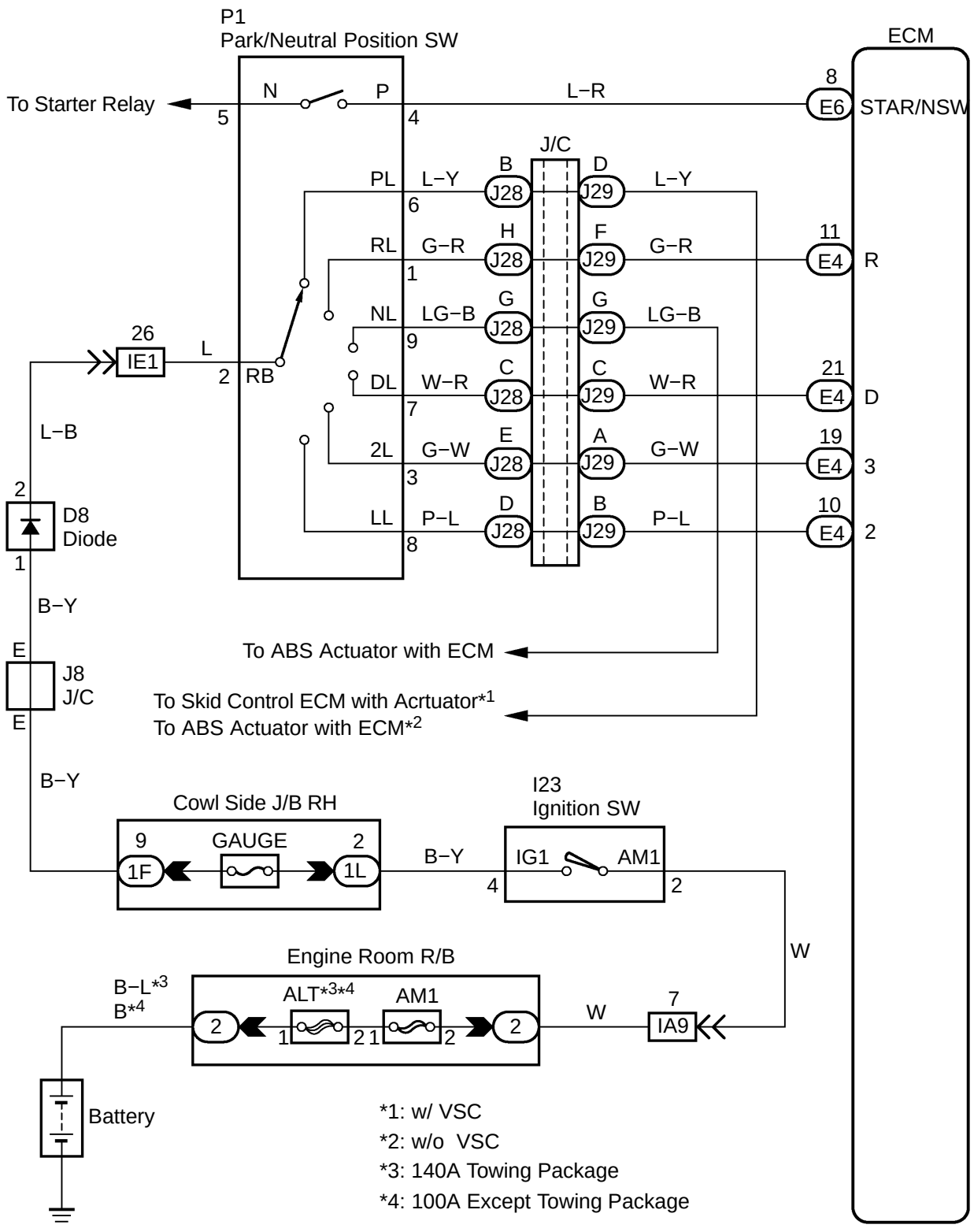

INSPECTION PROCEDURE

HINT:

According to the DATA LIST displayed by the OBD II scan tool or hand−held tester, you can read the value of the switch, sensor, actuator and so on without parts removal. Reading the DATA LIST as the first step of troubleshooting is one method to shorten labor time.

(a) Warm up the engine.
(b) Turn the ignition switch off.
(c) Connect the OBD II scan tool or hand−held tester to the DLC3.
(d) Turn the ignition switch to the ON position.
(e) Push the ”ON” button of the OBD II scan tool or the hand−held tester.
(f) When you use the hand−held tester:
Select the item ”DIAGNOSIS / ENHANCED OBD II / DATA LIST”.
(g) According to the display on the tester, read the ”DATA LIST”.

Item	Measurement Item/ Range (display)	Normal Condition	Diagnostic Note
PNP SW [NSW]	PNP SW Status/ ON or OFF	Shift lever position is; P and N: ON Except P and N: OFF	When the shift lever position displayed on the hand−held tester differs from the actual position, adjustment of the PNP switch or the shift cable may be incorrect.
LOW	PNP SW Status/ ON or OFF	• Shift lever position is 2: OFF ↓ • Shift position L switch Push: ON ↓ • Shift position L switch Push: OFF	↑
2ND	PNP SW Status/ ON or OFF	Shift lever position is; 2 and L: ON Except 2 and L: OFF	↑
3RD	PNP SW Status/ ON or OFF	Shift lever position is; 3: ON Except 3: OFF	↑
DRIVE	PNP SW Status/ ON or OFF	Shift lever position is; D: ON Except D: OFF	↑
REVERSE	PNP SW Status/ ON or OFF	Shift lever position is; R: ON Except R: OFF	↑

1	**Inspect park/neutral position switch.**

Switch Side:
(Connector Front View):

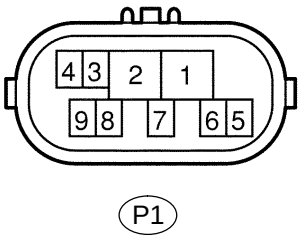

PREPARATION:

(a) Jack up the vehicle.

(b) Disconnect the park/neutral position switch connector.

CHECK:

Measure the resistance according to the value(s) in the table below when the shift lever is moved to each position.

OK:

Shift Position	Tester Connection	Specified Condition
P	2 − 6 and 4 − 5	Below 1 Ω
Except P	↑	10 kΩ or higher
R	2 − 1	Below 1 Ω
Except R	↑	10 kΩ or higher
N	2 − 9 and 4 − 5	Below 1 Ω
Except N	↑	10 kΩ or higher
D	2 − 7	Below 1 Ω
Except D	↑	10 kΩ or higher
3	2 − 3	Below 1 Ω
Except 3	↑	10 kΩ or higher
2	2 − 8	Below 1 Ω
Except 2	↑	10 kΩ or higher

NG → **Replace park/neutral position switch (See page AT−11).**

OK

2	Check harness and connector (Park/neutral position switch − ECM).

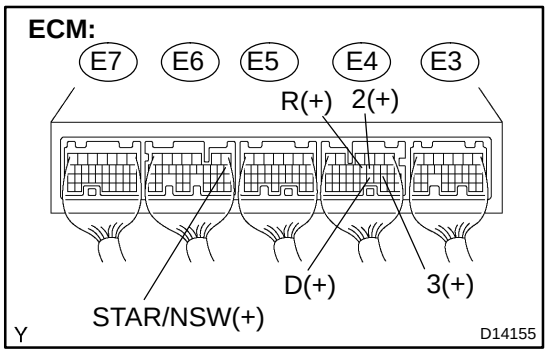

PREPARATION:

(a) Connect the park/neutral position switch connector.

(b) Turn the ignition switch ON.

CHECK:

Measure the voltage according to the value(s) in the table below when the shift lever is moved to each position.

OK:

Shift Position	Tester connection	Specified condition
P and N	E6 − 8 (STAR/NSW) − Body ground	Below 2 V
Except P and N	↑	10 to 14 V
R	E4 − 11 (R) − Body ground	10 to 14 V*
Except R	↑	Below 1 V
D	E4 − 21 (D) − Body ground	10 to 14 V
Except D	↑	Below 1 V
3	E4 − 19 (3) − Body ground	10 to 14 V
Except 3	↑	Below 1 V
2 and L	E4 − 10 (2) − Body ground	10 to 14 V
Except 2 and L	↑	Below 1 V

HINT:

*: The voltage will drop slightly due to lighting up of the back up light.

NG → **Repair or replace the harness or connector (See page IN−30).**

OK →

Replace the ECM (See page SF−82).

DIDWK−01

DTC	P0710	Transmission Fluid Temperature Sensor ”A” Circuit

DTC	P0712	Transmission Fluid Temperature Sensor ”A” Circuit Low Input

DTC	P0713	Transmission Fluid Temperature Sensor ”A” Circuit High Input

CIRCUIT DESCRIPTION

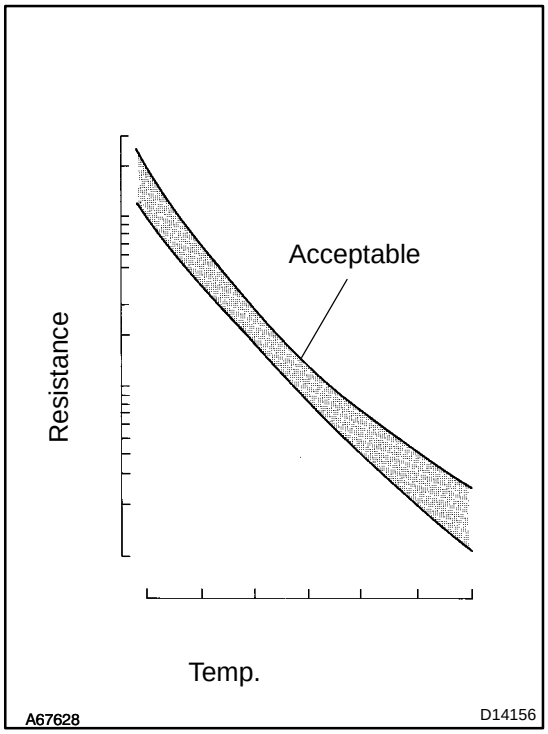

The ATF (Automatic Transmission Fluid) temperature sensor converts the fluid temperature into a resistance value which is input into the ECM.
The ECM applies a voltage to the temperature sensor through ECM terminal THO1.
The sensor resistance changes with the transmission fluid temperature. As the temperature becomes higher, the sensor resistance decreases.
One terminal of the sensor is grounded so that the sensor resistance decreases and the voltage goes down as the temperature becomes higher.
The ECM calculates the fluid temperature based on the voltage signal.

DTC No.	DTC Detection Condition	Trouble Area
P0710	(a) and (b) are detected momentarily within 0.5 sec. when neither P0712 nor P0713 is detected (1−trip detection logic) (a) ATF temperature sensor No.1 resistance is less than 79 Ω. (b) ATF temperature sensor No.1 resistance is more than 156 kΩ. HINT: Within 0.5 sec., the malfunction switches from (a) to (b) or from (b) to (a)	• Open or short in ATF temperature sensor No.1 circuit • Transmission wire (ATF temperature sensor No.1) • ECM
P0712	ATF temperature sensor No.1 resistance is less than 79 Ω for 0.5 sec. or more (1−trip detection logic)	• Short in ATF temperature sensor No.1 circuit • Transmission wire (ATF temperature sensor No.1) • ECM
P0713	ATF temperature No.1 sensor resistance is more than 156 kΩ when 15 minutes or more have elapsed after the engine start DTC is detected for 0.5 sec. or more (1−trip detection logic)	• Open in ATF temperature sensor No.1 circuit • Transmission wire (ATF temperature sensor No.1) • ECM

MONITOR DESCRIPTION

These DTCs indicate an open or short in the automatic transmission fluid (ATF) temperature sensor circuit. The automatic transmission fluid (ATF) temperature sensor converts ATF temperature to an electrical resistance value. Based on the resistance, the ECM determines the ATF temperature, and the ECM detects an open or short in the ATF temperature circuit. If the resistance value of the ATF temperature is less than 79Ω*1 or more than 156kΩ*2, the ECM interprets this as a fault in the ATF sensor or wiring. The ECM will turn on the MIL and store the DTC.
*1: 150°C (302°F) or more is indicated regardless of the actual ATF temperature.
*2: −40°C (−40°F) is indicated regardless of the actual ATF temperature.
HINT:
The ATF temperature can be checked on the OBD II scan tool or hand−held tester display.

MONITOR STRATEGY

Related DTCs	P0710	ATF temperature sensor/Range check (Fluttering)
	P0712	ATF temperature sensor/Range check (Low resistance)
	P0713	ATF temperature sensor/Range check (High resistance)
Required sensors/Components	ATF temperature sensor (TFT sensor)	
Frequency of operation	Continuous	
Duration	0.5 sec.	
MIL operation	Immediate	
Sequence of operation	None	

TYPICAL ENABLING CONDITIONS

Item	Specification	
	Minimum	Maximum
The monitor will run whenever these DTCs are not present.	See page DI−1128	
Range check (Fluttering, Low resistance)		
The typical enabling condition is not available.	−	
Range check (High resistance)		
Time after engine start	15 min. or more	−

TYPICAL MALFUNCTION THRESHOLDS

Detection criteria	Threshold
Range check (Fluttering)	
TFT (transmission fluid temperature) sensor resistance	Less than 79 Ω or More than 156 kΩ
Range check (Low resistance)	
TFT (transmission fluid temperature) sensor resistance	Less than 79 Ω
Range check (High resistance)	
TFT (transmission fluid temperature) sensor resistance	More than 156 kΩ

COMPONENT OPERATING RANGE

Parameter	Standard value
TFT (transmission fluid temperature) sensor	Atmospheric temperature to approx. 130°C (266°F)

WIRING DIAGRAM

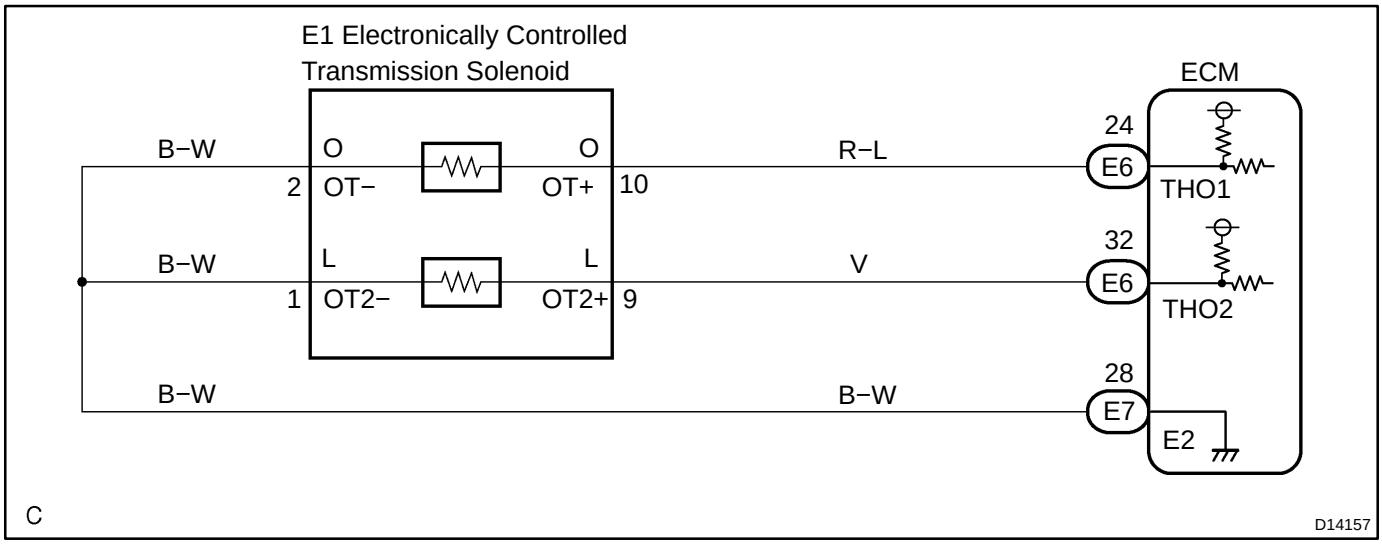

INSPECTION PROCEDURE

HINT:

According to the DATA LIST displayed by the OBD II scan tool or hand−held tester, you can read the value of the switch, sensor, actuator and so on without parts removal. Reading the DATA LIST as the first step of troubleshooting is one method to shorten labor time.

(a) Warm up the engine.
(b) Turn the ignition switch off.
(c) Connect the OBD II scan tool or hand−held tester to the DLC3.
(d) Turn the ignition switch to the ON position.
(e) Push the ”ON” button of the OBD II scan tool or the hand−held tester.
(f) When you use the hand−held tester:
Select the item ”DIAGNOSIS / ENHANCED OBD II / DATA LIST”.
(g) According to the display on the tester, read the ”DATA LIST”.

Item	Measurement Item/ Range (display)	Normal Condition
AT FLUID TEMP 1	ATF Temp. Sensor Value/ min.: −40°C (−40°F) max.: 215°C (419°F)	• After Stall Test; Approx. 80°C (176°F) • Equal to ambient temperature when cold soak

HINT:

When DTC P0712 is output and hand−held tester output is 150°C (302°F) or more, there is a short circuit.
When DTC P0713 is output and hand−held tester output is −40°C (−40°F), there is an open circuit.
Measure the resistance between terminal THO1 (OT) and body ground.

Temperature Displayed	Malfunction
−40˚C (−40˚F)	Open circuit
150˚C (302˚F) or more	Short circuit

HINT:

If a circuit related to the ATF temperature sensor becomes open, P0713 is immediately set (in 0.5 second). When P0713 is set, P0711 cannot be detected.
It is not necessary to inspect the circuit when P0711 is set.

1	**Inspect transmission wire (ATF temperature sensor No.1).**

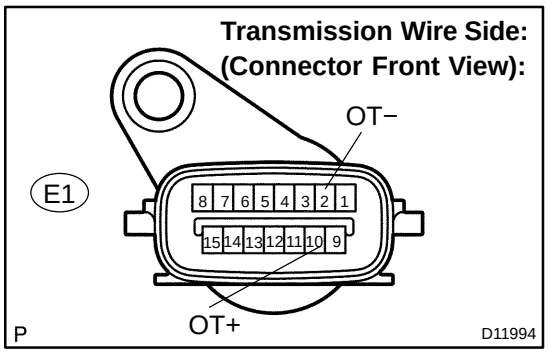

PREPARATION:

Disconnect the transmission wire connector from the transmission.

CHECK:

Measure the resistance according to the value(s) in the table below.

OK:

Tester Connection	Specified Condition
2 (OT−) − 10 (OT+)	79 Ω to 156 kΩ
2 (OT−) − Body ground	10 kΩ or higher
10 (OT+) − Body ground	10 kΩ or higher

HINT:

If the resistance is out of the specified range with either the ATF temperature shown in the table below, the driveability of the vehicle may decrease.

ATF Temperature	Specified Condition
20°C (68°F)	3 to 4 kΩ
110°C (230°F)	0.22 to 0.28 kΩ

NG → **Repair or replace the transmission wire (ATF temperature sensor No.1) (See page AT−9).**

OK

2	Check harness and connector (Transmission wire − ECM).

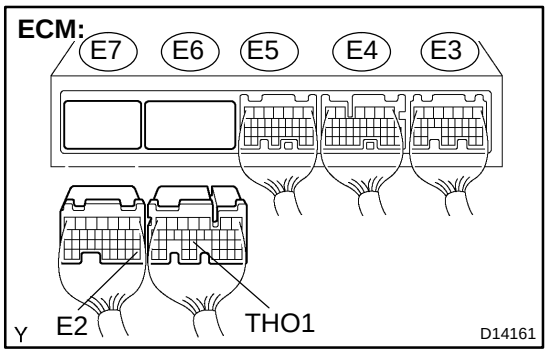

PREPARATION:

(a) Connect the transmission wire connector.

(b) Disconnect the connector of the ECM.

CHECK:

Measure the resistance according to the value(s) in the table below.

OK:

Tester Connection	Specified Condition
E6 − 24 (THO1) − E7 − 28 (E2)	79 Ω to 156 kΩ

CHECK:

Measure the resistance according to the value(s) in the table below.

OK:

Tester Connection	Specified Condition
E6 − 24 (THO1) − Body ground	10 kΩ or higher
E7 − 28 (E2) − Body ground	↑

NG → **Repair or replace the harness or connector (See page IN−30).**

OK →

Replace the ECM (See page SF−82).

DIDWL−01

DTC P0711 Transmission Fluid Temperature Sensor ”A” Performance

CIRCUIT DESCRIPTION

See page DI−1166.

DTC No.	DTC Detection Condition	Trouble Area
P0711	Both (a) and (b) are detected: (2−trip detection logic) (a) Intake air and engine coolant temps. are more than −15˚C (−4°F) at engine start (b) After normal driving for over 22 min. and 9 km (6 mile) or more, ATF temp. is less than 20˚C (50°F)	• Transmission wire (ATF temperature sensor No.1)

MONITOR DESCRIPTION

This DTC indicates that there is a problem with output from the automatic transmission fluid (ATF) temperature sensor and that the sensor itself is defective. The ATF temperature sensor converts the ATF temperature to an electrical resistance value. Based on the resistance, the ECM determines the ATF temperature and detects an open or short in the ATF temperature circuit or a fault in the ATF temperature sensor.
After running the vehicle for a certain period, the ATF temperature should increase. If the ATF temperature is below 20°C (68°F) after running the vehicle for a certain period, the ECM interprets this as a fault, and turns on the MIL.

MONITOR STRATEGY

Related DTCs	P0711	ATF temperature sensor/Rationality check
Required sensors/Components	ATF temperature sensor (TFT sensor)	
Frequency of operation	Continuous	
Duration	3 sec.	
MIL operation	2 driving cycles	
Sequence of operation	None	

TYPICAL ENABLING CONDITIONS

Item	Specification	
	Minimum	Maximum
The monitor will run whenever this DTC is not present.	See page DI−1128	
TFT (transmission fluid temperature) sensor circuit	Not circuit malfunction	
ECT (Engine coolant temperature) sensor circuit	Not circuit malfunction	
IAT (Intake air temperature) sensor circuit	Not circuit malfunction	
Time after engine start	21 min. and 40 sec.	
Driving distance after engine start	9 km (5.6 mile) or more	−
IAT (12 sec. after engine start)	−10˚C (14˚F) or more	−
ECT (12 sec. after engine start)	−10˚C (14˚F) or more	−

TYPICAL MALFUNCTION THRESHOLDS

Detection criteria	Threshold
TFT (transmission fluid temperature)	Less than 20˚C (68˚F) (varies with TFT (transmission fluid temperature) at engine start)

WIRING DIAGRAM

See page DI−1166.

INSPECTION PROCEDURE

HINT:

According to the DATA LIST displayed by the OBD II scan tool or hand−held tester, you can read the value of the switch, sensor, actuator and so on without parts removal. Reading the DATA LIST as the first step of troubleshooting is one method to shorten labor time.

(a) Warm up the engine.
(b) Turn the ignition switch off.
(c) Connect the OBD II scan tool or hand−held tester to the DLC3.
(d) Turn the ignition switch to the ON position.
(e) Push the ”ON” button of the OBD II scan tool or the hand−held tester.
(f) When you use the hand−held tester:
Select the item ”DIAGNOSIS / ENHANCED OBD II / DATA LIST”.
(g) According to the display on the tester, read the ”DATA LIST”.

Item	Measurement Item/ Range (display)	Normal Condition
AT FLUID TEMP 1	ATF Temp. Sensor Value/ min.: −40°C (−40°F) max.: 215°C (419°F)	• After Stall Test; Approx. 80°C (176°F) • Equal to ambient temperature when cold soak

HINT:

When DTC P0712 is output and hand−held tester output is 150°C (302°F) or more, there is a short circuit.
When DTC P0713 is output and hand−held tester output is −40°C (−40°F), there is an open circuit.
Measure the resistance between terminal THO1 (OT) and body ground.

Temperature Displayed	Malfunction
−40˚C (−40˚F)	Open circuit
150˚C (302˚F) or more	Short circuit

HINT:

If a circuit related to the ATF temperature sensor becomes open, P0713 is immediately set (in 0.5 second).
When P0713 is set, P0711 cannot be detected.
It is not necessary to inspect the circuit when P0711 is set.

1	**Check other DTCs output (in addition to DTC P0711).**

PREPARATION:

(a) Turn the ignition switch off.
(b) Connect the OBD II scan tool or hand−held tester to the DLC3.
(c) Turn the ignition switch to the ON position.
(d) Turn on the tester.
(e) Select the item ”DIAGNOSIS / ENHANCED OBD II / DTC INFO / CURRENT CODES”.

CHECK:

Read the DTCs using the OBD II scan tool or the hand−held tester.

RESULT:

Display (DTC output)	Proceed to
Only ”P0711” is output	A
”P0711” and other DTCs	B

HINT:

If any other codes besides ”P0711” are output, perform troubleshooting for those DTCs first.

B → **Go to DTC chart (See page DI−1156).**

A

2	**Check transmission fluid level (See page DI−1117).**

OK:

Automatic transmission fluid level is correct.

NG → **Add fluid (See page DI−1117).**

OK

Replace the transmission wire (ATF temperature sensor) (See page AT−9).

DIDWM−01

DTC	P0717	Input Speed Sensor Circuit No Signal

CIRCUIT DESCRIPTION

This sensor detects the rotation speed of the turbine which shows the input revolution of transmission. By comparing the input turbine speed signal (NT) with the counter gear speed sensor signal (SP2), the ECM detects the shift timing of the gears and appropriately controls the engine torque and hydraulic pressure according to various conditions, thus, providing smooth gear shift.

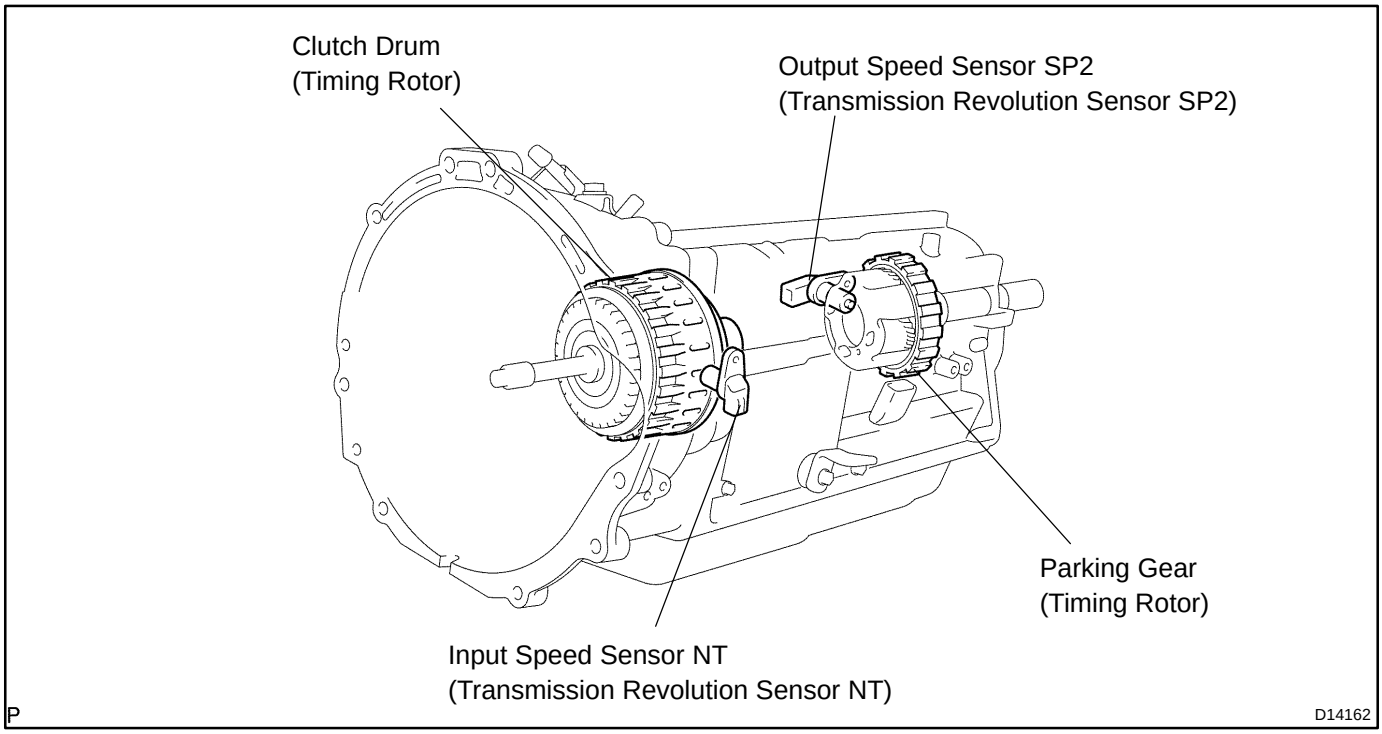

DTC No.	DTC Detection Condition	Trouble Area
P0717	All conditions below are detected for 5 secs. or more (1−trip detection logic) (a) Gear change is not performed (b) Gear position: 4th or 5th (c) T/M input shaft rpm: 300 rpm or less (d) T/M output shaft rpm: 1,000 rpm or more (e) Park/neutral position switch: • NSW input signal is OFF • R input signal is OFF • L input signal is OFF (f) Shift solenoid valves, park/neutral position switch and vehicle speed sensor are in normal operation	• Open or short in speed sensor (NT) circuit • Speed sensor (NT) • ECM • Automatic transmission (clutch, brake or gear, etc.)

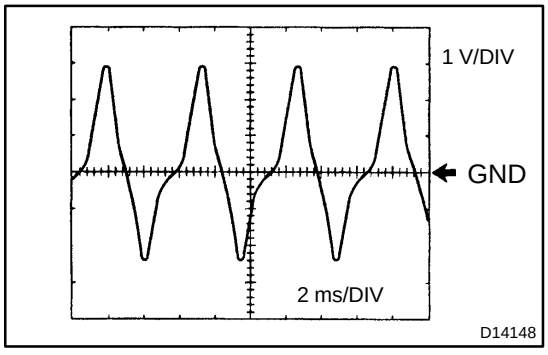

Reference (Using an oscilloscope):

Check the waveform between terminals NT+ and NT− of the ECM connector.

Standard: Refer to the illustration.

Terminal	NT+ − NT−
Tool setting	1V/DIV, 2ms/DIV
Vehicle condition	Engine idle speed (P or N position)

MONITOR DESCRIPTION

This DTC indicates that pulse is not output from the speed sensor NT (Turbine (input) speed sensor) or is output only little. The NT terminal of the ECM detects the revolving signal from the speed sensor (NT) (input RPM). The ECM outputs a gearshift signal comparing the input speed sensor (NT) with the output speed sensor (SP2).

While the vehicle is operating in the 4th or 5th gear position in the shift position of D, if the input shaft revolution is less than 300 rpm*1 although the output shaft revolution is more than 1000 rpm or more*2, the ECM detects the trouble, illuminates the MIL and stores the DTC.

*1: Pulse is not output or is irregularly output.

*2: The vehicle speed is approx. 50 km/h (31 mph) or more.

MONITOR STRATEGY

Related DTCs	P0717	Speed sensor (NT)/Verify pulse input
Required sensors/Components	Main	Speed sensor (NT)
	Sub	Speed sensor (NO)
Frequency of operation	Continuous	
Duration	5 sec.	
MIL operation	Immediate	
Sequence of operation	None	

TYPICAL ENABLING CONDITIONS

Item	Specification	
	Minimum	Maximum
The monitor will run whenever this DTC is not present.	See page DI−1128	
Shift change	Shift change is completed and before starting next shift change operation	
ECM selected gear	4th or 5th	
Output shaft rpm	1,000 rpm or more	−
NSW switch	OFF	
R switch	OFF	
L switch	OFF	
Engine	Running	
Ignition switch	ON	
Starter	OFF	

TYPICAL MALFUNCTION THRESHOLDS

Detection criteria	Threshold
Sensor signal rpm	Less than 300 rpm

COMPONENT OPERATING RANGE

Parameter	Standard value
Speed sensor (NT)	Input speed is equal to engine speed when lock−up ON.

WIRING DIAGRAM

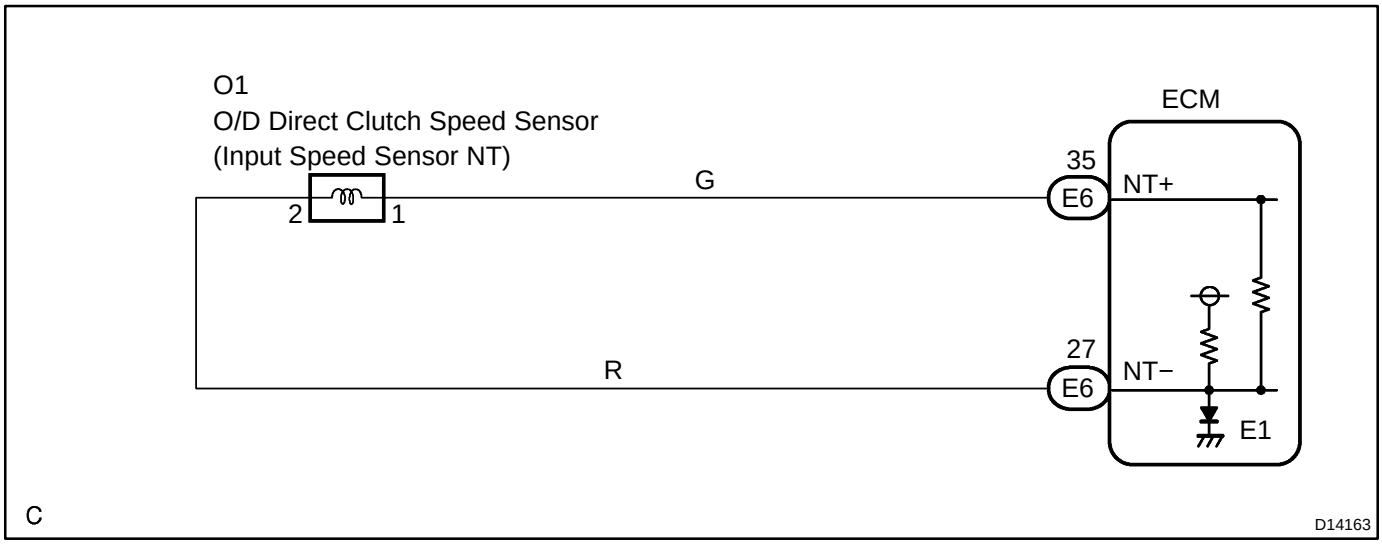

INSPECTION PROCEDURE

HINT:

According to the DATA LIST displayed by the OBD II scan tool or hand−held tester, you can read the value of the switch, sensor, actuator and so on without parts removal. Reading the DATA LIST as the first step of troubleshooting is one method to shorten labor time.

(a) Warm up the engine.
(b) Turn the ignition switch off.
(c) Connect the OBD II scan tool or hand−held tester to the DLC3.
(d) Turn the ignition switch to the ON position.
(e) Push the ”ON” button of the OBD II scan tool or the hand−held tester.
(f) When you use the hand−held tester:
Select the item ”DIAGNOSIS / ENHANCED OBD II / DATA LIST”.
(g) According to the display on the tester, read the ”DATA LIST”.

Item	Measurement Item/ Range (display)	Normal Condition
SPD (NT)	Input Turbine Speed/ display: 50 r/min	[HINT] • Lock−up ON (After warming up the engine); Input Turbine speed (NT) equal to the engine speed. • Lock−up OFF (Idling at N position); Input Turbine speed (NT) nearly equal to the engine speed.

HINT:

- SPD (NT) is always 0 while driving:
Open or short in the sensor or circuit.
- SPD (NT) is always more than 0 and less than 300 rpm while driving the vehicle at 50 km/h (31 mph) or more:
Sensor trouble, improper installation, or intermittent connection trouble of the circuit.

1	Inspect speed sensor installation.

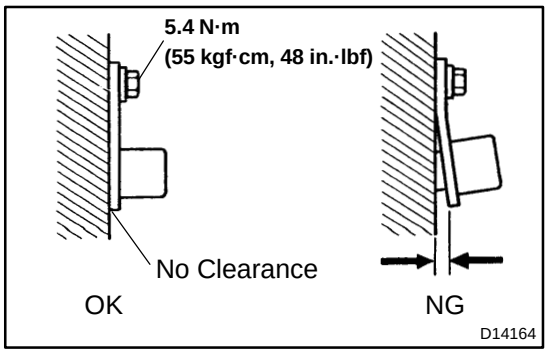

PREPARATION:

Jack up the vehicle.

CHECK:

Check the speed sensor (NT) installation.

OK:

The installation bolt is tightened properly and there is no clearance between the sensor and transmission case.

Torque: 5.4 N·m (55 kgf·cm, 48 in.·lbf)

NG	Replace speed sensor NT (See page AT−8).

OK

2	Inspect speed sensor NT.

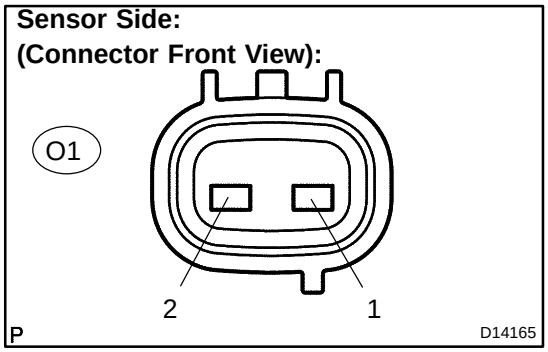

PREPARATION:

Disconnect the speed sensor connector from the transmission.

CHECK:

Measure the resistance according to the value(s) in the table below.

OK:

Tester Connection	Specified Condition 20 °C (68 °F)
1 − 2	560 to 680 Ω

NG	Replace speed sensor NT (See page AT−8).

OK

3	Check harness and connector (ECM − speed sensor NT).

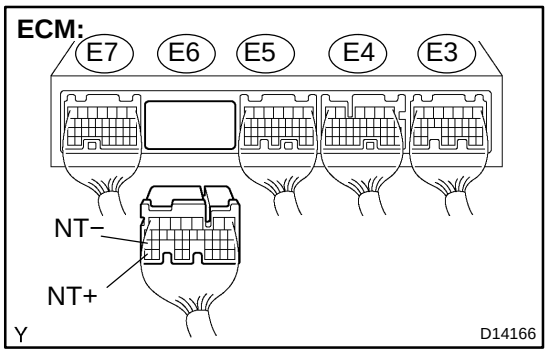

PREPARATION:

(a) Connect the speed sensor connector.

(b) Disconnect the ECM connector.

CHECK:

Measure the resistance according to the value(s) in the table below.

OK:

Tester Connection	Specified Condition 20°C (68°F)
E6 − 35 (NT+) − E6 − 27 (NT−)	560 to 680 Ω

CHECK:

Measure the resistance according to the value(s) in the table below.

OK:

Tester Connection	Specified Condition
E6 − 35 (NT+) − Body ground	10 kΩ or higher
E6 − 27 (NT−) − Body ground	↑

NG → **Repair or replace harness or connector (See page IN−30).**

OK →

Replace the ECM (See page SF−82).

DIDWN−01

DTC	P0722	Output Speed Sensor Circuit No Signal

CIRCUIT DESCRIPTION

The speed sensor SP2 detects the rotation speed of the transmission output shaft and sends signals to the ECM. The ECM determines the vehicle speed based on these signals. An AC voltage is generated in the speed sensor SP2 coil as the parking gear mounted on the rear planetary gear assy rotates, and this voltage is sent to the ECM. The parking gear on the rear planetary gear is used as the timing rotor for this sensor. The gear shift point and lock−up timing are controlled by the ECM based on the signals from this vehicle speed sensor and the throttle position sensor signal.

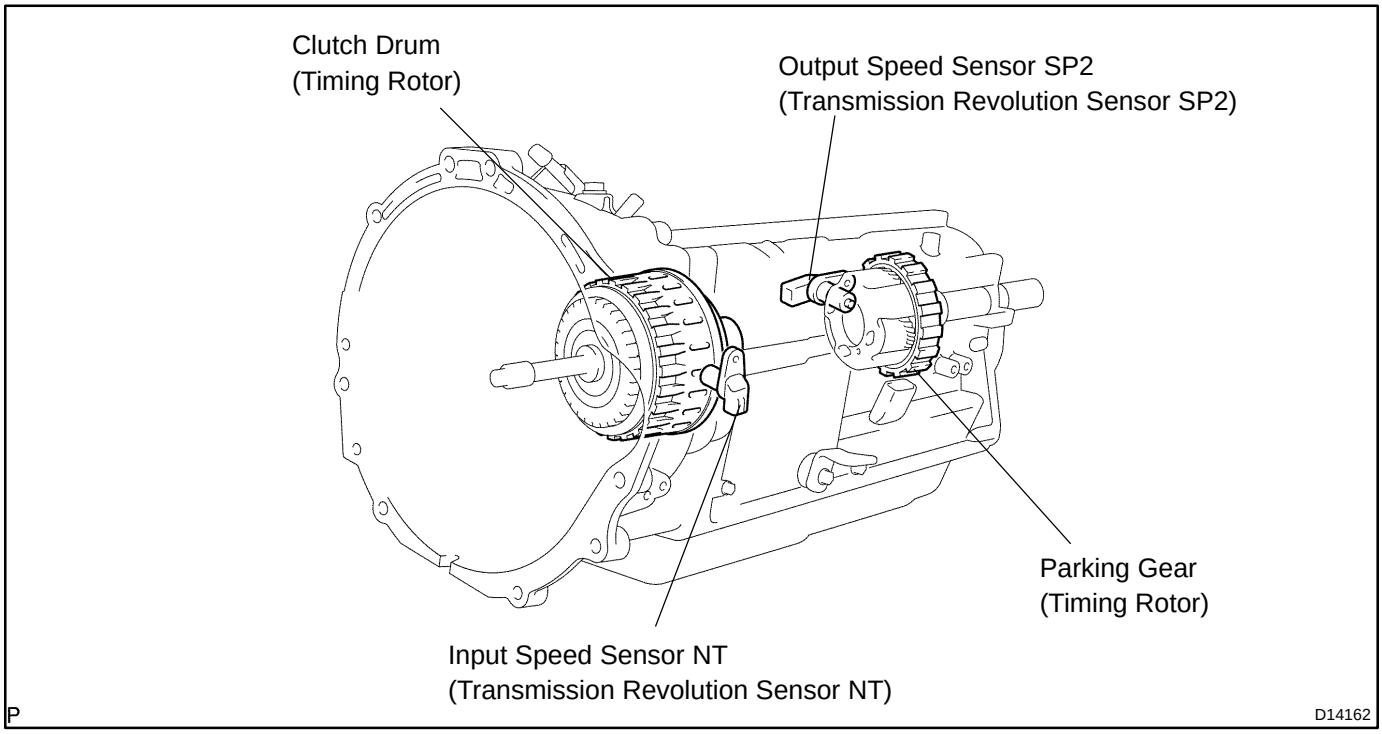

DTC No.	DTC Detection Condition	Trouble Area
P0722	All conditions below are detected 500 times or more continuously (1−trip detection logic) (a) No signal from speed sensor (SP2) is input to ECM while 4 pulses of No. 1 vehicle speed sensor signal are sent (b) Vehicle speed is 9 km/h (6 mph) or more for at least 4 sec. (c) Park/neutral position switch is OFF. (d) Transfer position is except neutral (4WD).	• Open or short in speed sensor (SP2) circuit • Speed sensor (SP2) • ECM • Automatic transmission (clutch, brake or gear, etc.)

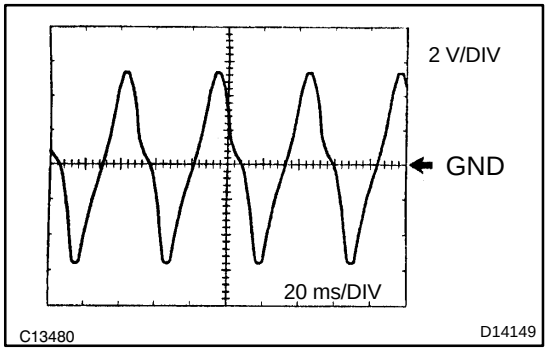

Reference (Using an oscilloscope):

Check the waveform between terminals SP2+ and SP2− of the ECM connector.

Standard: Refer to the illustration.

Terminal	SP2+ − SP2−
Tool setting	2V/DIV, 20ms/DIV
Vehicle condition	Vehicle speed 20 km/h (12 mph)

MONITOR DESCRIPTION

The output speed sensor SP2 monitors the output shaft speed. The ECM controls the gearshift point and the lock up timing based on the signals from the output speed sensor SP2 and throttle position sensor.
If the ECM detects no signal from the output shaft speed sensor SP2 even while the vehicle is moving, it will conclude that is a malfunction of the output speed sensor SP2. The ECM will illuminate the MIL and set a DTC.

MONITOR STRATEGY

Related DTCs	P0722	Speed sensor SP2/Verify pulse input
Required sensors/Components	Speed sensor SP2	
Frequency of operation	Continuous	
Duration	500 output shaft revolution	
MIL operation	Immediate	
Sequence of operation	None	

TYPICAL ENABLING CONDITIONS

Item	Specification	
	Minimum	Maximum
The monitor will run whenever this DTC is not present.	See page DI−1128	
Vehicle speed sensor pulse input	4	
Vehicle speed range (4 sec. or more)	9 km/h (5.59 mph) or more	−
NSW switch	OFF	
Battery voltage	8 V or more	−
Ignition switch	ON	
Starter	OFF	

TYPICAL MALFUNCTION THRESHOLDS

Detection criteria	Threshold
Output speed sensor pulse input	No input

WIRING DIAGRAM

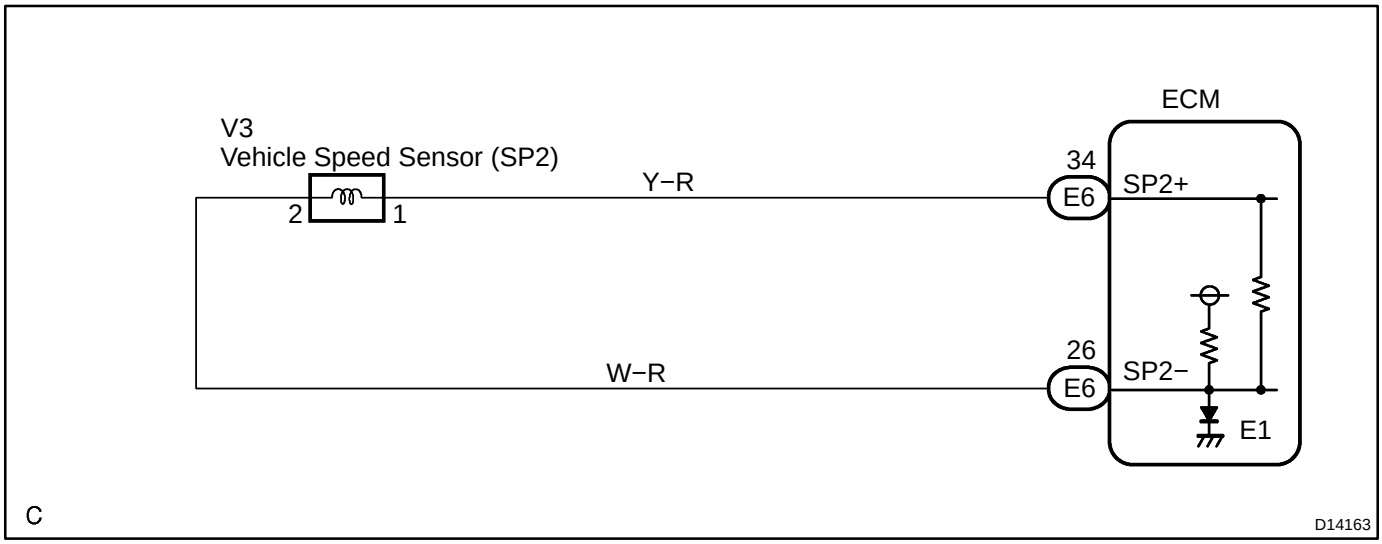

INSPECTION PROCEDURE

HINT:

According to the DATA LIST displayed by the OBD II scan tool or hand−held tester, you can read the value of the switch, sensor, actuator and so on without parts removal. Reading the DATA LIST as the first step of troubleshooting is one method to shorten labor time.

(a) Warm up the engine.
(b) Turn the ignition switch off.
(c) Connect the OBD II scan tool or hand−held tester to the DLC3.
(d) Turn the ignition switch to the ON position.
(e) Push the ”ON” button of the OBD II scan tool or the hand−held tester.
(f) When you use the hand−held tester:
Select the item ”DIAGNOSIS / ENHANCED OBD II / DATA LIST”.
(g) According to the display on the tester, read the ”DATA LIST”.

Item	Measurement Item/ Range (display)	Normal Condition
SPD (SP2)	Output shaft Speed/ min.: 0 km/h (0 mph) max.: 255 km/h (158 mph)	Vehicle stopped: 0 km/h (0 mph) [HINT] Equal to vehicle speed

HINT:

- SPD (SP2) is always 0 while driving:
Open or short in the sensor or circuit.
- SPD (SP2) is always more than 0 and less than 300 rpm while driving the vehicle at 50 km/h (31 mph) or more:
Sensor trouble, improper installation, or intermittent connection trouble of the circuit.

1	**Inspect speed sensor installation.**

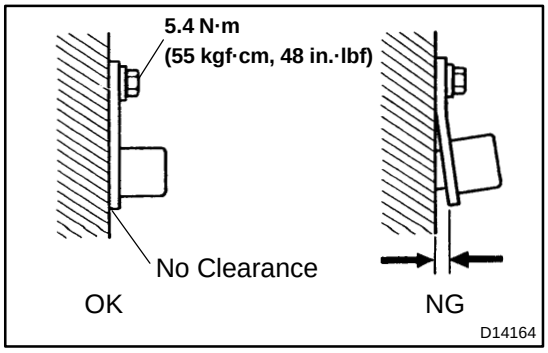

PREPARATION:

Jack up the vehicle.

CHECK:

Check the speed sensor (SP2) installation.

OK:

The installation bolt is tightened properly and there is no clearance between the sensor and transmission case.
Torque: 5.4 N·m (55 kgf·cm, 48 in.·lbf)

NG	**Replace speed sensor SP2 (See page AT−8).**

OK

2	Inspect speed sensor SP2.

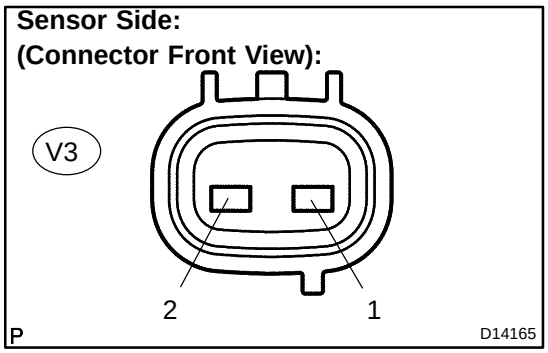

PREPARATION:

Disconnect the speed sensor connector from the transmission.

CHECK:

Measure the resistance according to the value(s) in the table below.

OK:

Tester Connection	Specified Condition 20 °C (68 °F)
1 − 2	560 to 680 Ω

NG → **Replace speed sensor SP2 (See page AT−8).**

OK

3	Check harness and connector (ECM − speed sensor SP2).

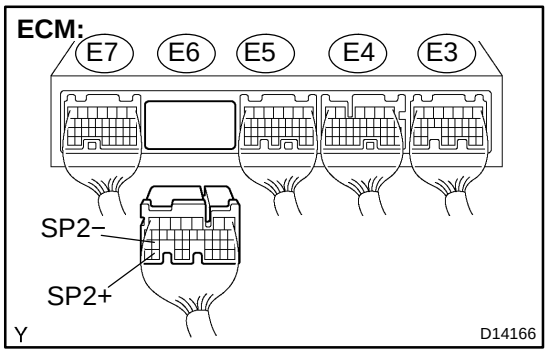

PREPARATION:

(a) Connect the speed sensor connector.

(b) Disconnect the ECM connector.

CHECK:

Measure the resistance according to the value(s) in the table below.

OK:

Tester Connection	Specified Condition 20°C (68°F)
E6 − 34 (SP2+) − E6 − 26 (SP2−)	560 to 680 Ω

CHECK:

Measure the resistance according to the value(s) in the table below.

OK:

Tester Connection	Specified Condition
E6 − 34 (SP2+) − Body ground	10 kΩ or higher
E6 − 26 (SP2−) − Body ground	↑

NG → **Repair or replace harness or connector (See page IN−30).**

OK

Replace the ECM (See page SF−82).

DIDWO−01

DTC	P0724	Brake Switch ”B” Circuit High

CIRCUIT DESCRIPTION

The purpose of this circuit is to prevent the engine from stalling while driving in lock−up condition when brakes are suddenly applied.
When the brake pedal is depressed, this switch sends a signal to the ECM. Then the ECM cancels the operation of the lock−up clutch while braking is in progress.

DTC No.	DTC Detection Condition	Trouble Area
P0724	The stop light switch remains ON even when the vehicle is driven in a STOP (less than 3 km/h (2 mph)) and GO (30 km/h (19 mph) or more) fashion 5 times. (2−trip detection logic).	• Short in stop light switch signal circuit • Stop light switch • ECM

MONITOR DESCRIPTION

This DTC indicates that the stop light switch remains on. When the stop light switch remains ON during ”stop and go” driving, the ECM interprets this as a fault in the stop light switch and the MIL comes on and the ECM stores the DTC. The vehicle must stop (less than 3 km/h (2 mph)) and go (30 km/h (19 mph) or more) ten times for two driving cycles in order to detect a malfunction.

MONITOR STRATEGY

Related DTCs	P0724	Stop light switch/Range check/Rationality
Required sensors/Components	Main	Stop light switch
	Sub	Vehicle speed sensor
Frequency of operation	Continuous	
Duration	GO and STOP 5 times	
MIL operation	2 driving cycles	
Sequence of operation	None	

TYPICAL ENABLING CONDITIONS

Item	Specification	
	Minimum	Maximum
The monitor will run whenever this DTC is not present.	See page DI−1128	
Battery voltage	8 V or more	−
Ignition switch	ON	
Starter	OFF	
GO (Vehicle speed is 30 km/h (18.63 mph) or more)	Once	
STOP (Vehicle speed is less than 3 km/h (1.86 mph))	Once	

TYPICAL MALFUNCTION THRESHOLDS

Detection criteria	Threshold
Brake switch	Remain ON during GO and STOP 5 times

WIRING DIAGRAM

See page DI−706.

INSPECTION PROCEDURE

1	**Read value of DATA LIST (STP signal).**

HINT:

According to the DATA LIST displayed by the OBD II scan tool or hand−held tester, you can read the value of the switch, sensor, actuator and so on without parts removal. Reading the DATA LIST as the first step of troubleshooting is one method to shorten labor time.

(a) Warm up the engine.
(b) Turn the ignition switch off.
(c) Connect the OBD II scan tool or hand−held tester to the DLC3.
(d) Turn the ignition switch to the ON position.
(e) Push the ”ON” button of the OBD II scan tool or the hand−held tester.
(f) When you use the hand−held tester:
Select the item ”DIAGNOSIS / ENHANCED OBD II / DATA LIST”.
(g) According to the display on the tester, read the ”DATA LIST”.
Standard:

Item	Measurement Item/ Range (display)	Normal Condition
Stop Light Switch	Stop light SW Status/ ON or OFF	• Brake Pedal is depressed: ON • Brake Pedal is released: OFF

NOTICE:

In the table above, the conditions listed under ”Normal Condition” are reference conditions. Do not depend solely on these reference conditions when deciding whether a part is faulty or not.

OK:

Brake Pedal Condition	Specified Condition
Depressed	ON
Released	OFF

NG → **Go to step 2.**

OK

Go to step 3.

2	Inspect stop light switch.

Double Cab

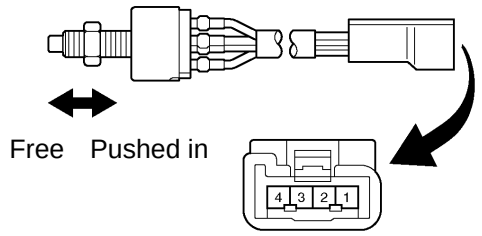

N I21525

Except Double Cab

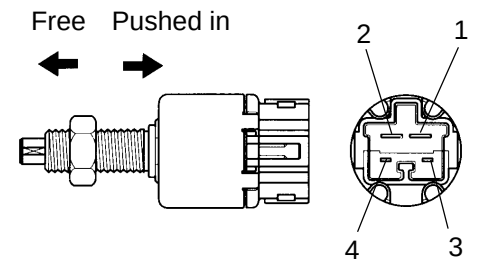

I27048

PREPARATION:

Remove the stop lamp switch assy.

CHECK:

Measure the resistance according to the value(s) in the table below.

OK:

Double Cab:

Switch position	Tester Connection	Specified Condition
Switch pin free	1 − 4	Below 1 Ω
Switch pin pushed in	↑	10 kΩ or higher

Except Double Cpb:

Switch position	Tester Connection	Specified Condition
Switch pin free	1 − 2	Below 1 Ω
Switch pin pushed in	↑	10 kΩ or higher
Switch pin free	3 − 4	10 kΩ or higher
Switch pin pushed in	↑	Below 1 Ω

NG → **Replace stop light switch.**

OK

3	Check harness and connector (ECM − stop light switch).

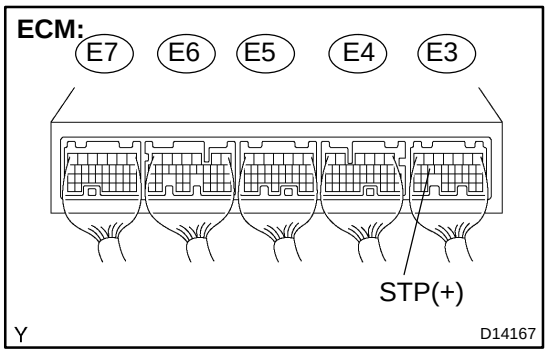

PREPARATION:

Install the stop lamp switch assy.

CHECK:

Measure the voltage according to the value(s) in the table below when the brake pedal is depressed and released.

OK:

Condition	Tester Connection	Specified Condition
Brake pedal is depressed	E3 − 15 (STP) − Body ground	10 to 14 V
Brake pedal is released	↑	Below 1 V

NG → **Repair or replace harness or connector (See page IN−30).**

OK →

Replace the ECM (See page SF−82).

DIDWP−01

DTC	P0748	Pressure Control Solenoid ”A” Electrical (Shift Solenoid Valve SL1)

CIRCUIT DESCRIPTION

Shifting from 1st to 5th is performed in combination with ”ON” and ”OFF” operation of the shift solenoid valves SL1, SL2, S1, S2 and SR which are controlled by the ECM. If an open or short circuit occurs in either of the shift solenoid valves, the ECM controls the remaining normal shift solenoid valves to allow the vehicle to be operated smoothly (See page DI−1150).

DTC No.	DTC Detection Condition	Trouble Area
P0748	ECM checks for an open or short circuit in shift solenoid valves SL1 (1−trip detection logic) (a) When solenoid, duty ratio equal to 100% (b) When solenoid is not energized, duty ratio is less than 3%	• Open or short in shift solenoid valve SL1 circuit • Shift solenoid valve SL1 • ECM

MONITOR DESCRIPTION

This DTC indicates an open or short in the shift solenoid valve SL1 circuit. The ECM commands gearshift by turning the shift solenoid valves ”ON/OFF”. When there is an open or short circuit in any shift solenoid valve circuit, the ECM detects the problem and illuminates the MIL and stores the DTC. And the ECM performs the fail−safe function and turns the other normal shift solenoid valves ”ON/OFF”. (In case of an open or short circuit, the ECM stops sending current to the circuit.)

While driving and shifting between 4th and 5th gears, if the ECM detects an open or short in the shift solenoid valve SL1 circuit, the ECM determines there is a malfunction (See page DI−1150).

MONITOR STRATEGY

Related DTCs	P0748	Shift solenoid valve SL1/Range check
Required sensors/Components	Shift solenoid valve SL1	
Frequency of operation	Continuous	
Duration	1 sec.	
MIL operation	Immediate	
Sequence of operation	None	

TYPICAL ENABLING CONDITIONS

Item	Specification	
	Minimum	Maximum
The monitor will run whenever this DTC is not present.	See page DI−1128	
Battery voltage	10 V or more	−
CPU commanded duty	−	Less than 75%
Ignition switch	ON	
Switch	OFF	

TYPICAL MALFUNCTION THRESHOLDS

Detection criteria	Threshold
Output signal duty	100%

COMPONENT OPERATING RANGE

Parameter	Standard value
Output signal duty	Less than 100%

WIRING DIAGRAM

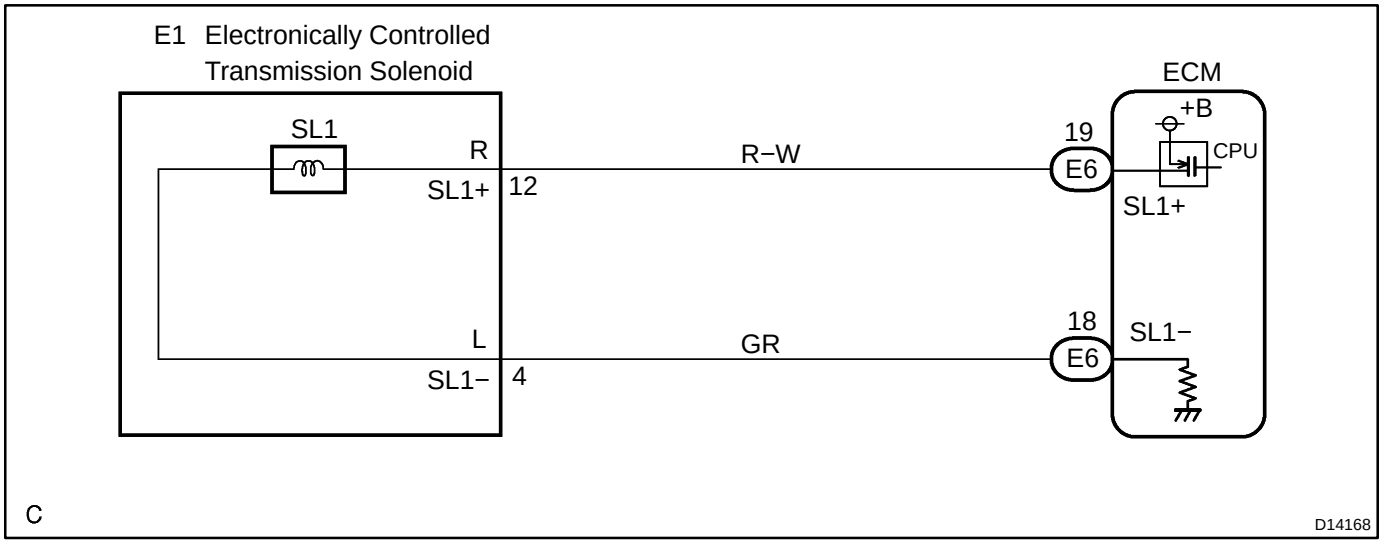

INSPECTION PROCEDURE

HINT:

- The shift solenoid valve SL1 is turned on/off normally when the shift lever is in the D position:

ECM command gearshift	1st	2nd	3rd	4th	5th
Shift solenoid valve SL1	OFF	OFF	OFF	OFF	ON

1	**Inspect transmission wire.**

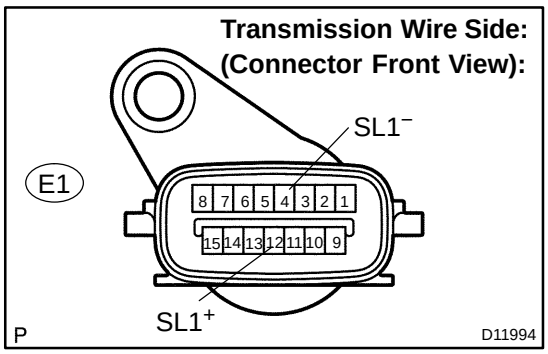

PREPARATION:

Disconnect the transmission wire connector.

CHECK:

Measure the resistance according to the value(s) in the table below.

OK:

Tester Connection	Specified Condition 20°C (68°F)
12 (SL1+) − 4 (SL1−)	5.0 to 5.6 Ω

CHECK:

Measure the resistance according to the value(s) in the table below.

OK:

Tester Connection	Specified Condition
12 (SL1+) − Body ground	10 kΩ or higher
4 (SL1−) − Body ground	↑

NG → **Go to step 3.**

OK

2	Check harness and connector (Transmission wire − ECM)

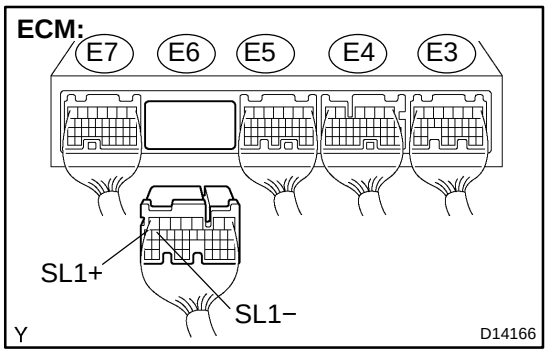

PREPARATION:

(a) Connect the transmission wire connector.

(b) Disconnect the ECM connector.

CHECK:

Measure the resistance according to the value(s) in the table below.

OK:

Tester Connection	Specified Condition 20°C (68°F)
E6 − 19 (SL1+) − E6 − 18 (SL1−)	5.0 to 5.6 Ω

CHECK:

Measure the resistance according to the value(s) in the table below.

OK:

Tester Connection	Specified Condition
E6 − 19 (SL1+) − Body ground	10 kΩ or higher
E6 − 18 (SL1−) − Body ground	↑

NG → **Repair or replace the harness or connector (See page IN−30).**

OK

Replace the ECM (See page SF−82).

3	Inspect shift solenoid valve SL1.

Shift Solenoid Valve SL1:

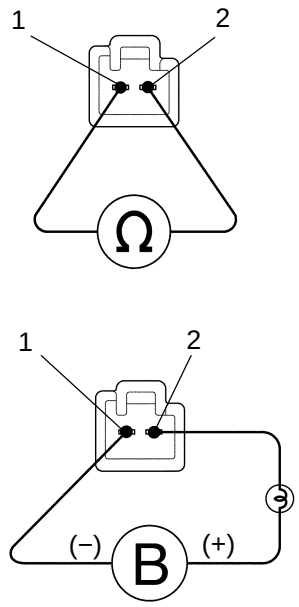

D12795

PREPARATION:

Remove the shift solenoid valve SL1 (See page AT−12).

CHECK:

Measure the resistance according to the value(s) in the table below.

OK:

Tester Connection	Specified Condition 20°C (68°F)
1 − 2	5.0 to 5.6 Ω

CHECK:

Connect the positive (+) lead with a 21 W bulb to terminal 2 and the negative (−) lead to terminal 1 of the solenoid valve connector, then check the movement of the valve.

OK:

The solenoid makes an operating sound.

NG → **Replace the shift solenoid valve SL1 (See page AT−12).**

OK

Repair or replace the transmission wire (See page AT−9).

DIDWQ−01

DTC	P0751	Shift Solenoid ”A” Performance (Shift Solenoid Valve S1)

SYSTEM DESCRIPTION

The ECM uses signals from the output shaft speed sensor and input speed sensor to detect the actual gear position (1st, 2nd, 3rd, 4th or 5th gear).
Then the ECM compares the actual gear with the shift schedule in the ECM memory to detect mechanical problems of the shift solenoid valves, valve body or automatic transmission (clutch, brake or gear, etc.).

DTC No.	DTC Detection Condition	Trouble Area
P0751	The gear required by the ECM does not match the actual gear when driving (2−trip detection logic)	• Shift solenoid valve S1 remains open or closed • Valve body is blocked • Automatic transmission (clutch, brake or gear, etc.)

MONITOR DESCRIPTION

This DTC indicates ”stuck ON malfunction” or ”stuck OFF malfunction” of the shift solenoid valve S1.
The ECM commands gear shifts by turning the shift solenoid valves ”ON/OFF”. When the gear position commanded by the ECM and the actual gear position are not the same, the ECM illuminates the MIL and stores the DTC.

MONITOR STRATEGY

Related DTCs	P0751	Shift solenoid valve S1/OFF malfunction
		Shift solenoid valve S1/ON malfunction
Required sensors/Components	Main	Shift solenoid valve S1
	Sub	Vehicle speed sensor, Throttle position sensor, Speed sensor (NT), Speed sensor (NO)
Frequency of operation	Continuous	
Duration	OFF malfunction (A) and (B)	0.4 sec.
	OFF malfunction (C)	Immediate
	ON malfunction (A), (B) and (C)	0.4 sec.
	ON malfunction (D)	3 sec.
	ON malfunction (E)	0.5 sec.
MIL operation	2 driving cycles	
Sequence of operation	None	

TYPICAL ENABLING CONDITIONS

Item	Specification	
	Minimum	Maximum
All:		
Turbine speed sensor circuit	Not circuit malfunction	
Output speed sensor circuit	Not circuit malfunction	
Shift solenoid valve S1 circuit	Not circuit malfunction	
Shift solenoid valve S2 circuit	Not circuit malfunction	
Shift solenoid valve SR circuit	Not circuit malfunction	
Shift solenoid valve SL1 circuit	Not circuit malfunction	

Shift solenoid valve SL2 circuit	Not circuit malfunction	
ECT (Engine coolant temperature) sensor circuit	Not circuit malfunction	
KCS sensor circuit	Not circuit malfunction	
ETCS (Electric throttle control system)	Not system down	
Transmission range	”D”	
ECT	40˚C (104˚F) or more	−
Spark advance from Max. retard timing by KCS control	0˚ CA or more	−
Engine	Starting	
Transfer range	”HIGH”*1	
Transfer range ”HIGH” *1 (This condition is applied only 4WD)		
*1 Following conditions met		
Vehicle speed sensor circuit	Not circuit malfunction	
Output shaft speed sensor circuit	Not circuit malfunction	
Transfer output speed	143 rpm or more	−
NO/NOtf (Transfer input speed/Transfer output speed)	0.9 to 1.1	
OFF malfunction (A)		
ECM selected gear	1st	
Vehicle speed	2 to 40 km/h (1.2 to 24.9 mph)	
Throttle valve opening angle	8% or more and 7.0% or more at 2,000 rpm (Conditions vary with engine speed)	−
OFF malfunction (B)		
Current ECM selected gear	5th	
Last ECM selected gear	4th	
Continuous time for ECM selecting 4th gear	2 sec. or more	−
Actual gear when ECM selected 4th gear	4th	
OFF malfunction (C)		
Current ECM selected gear	5th	
Last ECM selected gear	4th	
ON malfunction (A)		
ECM selected gear	1st	
Vehicle speed	2 to 40 km/h (1.2 to 24.9 mph)	
Throttle valve opening angle	7.0% or more at 2,000 rpm (Conditions vary with engine speed)	−
ON malfunction (B)		
ECM selected gear	4th	
Vehicle speed	2 km/h (1.2 mph) or more	−
Throttle valve opening angle	7.0% or more at 2,000 rpm (Conditions vary with engine speed)	−
ON malfunction (C)		
ECM selected gear	3rd	
Vehicle speed	2 km/h (1.2 mph) or more	−

Throttle valve opening angle	7.0% or more at 2,000 rpm (Conditions vary with engine speed)	−
ON malfunction (D)		
Current ECM selected gear	5th	
Last ECM selected gear	4th	
Vehicle speed (During transition from 4th to 5th gear)	−	Less than 100 km/h (62.2 mph)
ON malfunction (E)		
ECM selected gear	5th	
Engine speed − Turbine speed (NE − NT) (After transition from 4th to 5th gear)	−	Less than 150 rpm
Vehicle speed (After transition from 4th to 5th gear)	−	Less than 100 km/h (62.2 mph)

TYPICAL MALFUNCTION THRESHOLDS

Detection criteria	Threshold
[OFF malfunction]	
All of the following conditions are met: Conditions (A), (B) and (C)	
2 detections are necessary per driving cycle 1st detection; temporary flag ON 2nd detection; pending fault code ON	
OFF malfunction (A)	
Turbine speed/Output speed	0.93 to 1.07
OFF malfunction (B)	
Turbine speed/Output speed	0.65 to 0.79
OFF malfunction (C)	
Output record from ECM for 4th → 5th upshifting	Recorded
[ON malfunction]	
Either of the following conditions is met: **• ON malfunction (A) and (B)** **• ON malfunction (B) or (C), and ON malfunction (D) or (E)**	
ON malfunction (A) and (B)	
Turbine speed/Output speed	3.30 to 7.50
ON malfunction (C)	
Turbine speed/Output speed	1.91 to 2.35
ON malfunction (D)	
Turbine speed − Output speed x 4th gear ratio (NT − NO x 4th gear ratio)	1,000 rpm or more
ON malfunction (E)	
Turbine speed − Output speed x 5th gear ratio (NT − NO x 5th gear ratio)	1,000 rpm or more

INSPECTION PROCEDURE

HINT:

Performing the ACTIVE TEST using the hand−held tester allows the relay, VSV, actuator and so on to operate without parts removal. Performing the ACTIVE TEST as the first step of troubleshooting is one method to shorten labor time.

It is possible to display the DATA LIST during the ACTIVE TEST.

(a) Warm up the engine.
(b) Turn the ignition switch off.
(c) Connect the hand−held tester to the DLC3.
(d) Turn the ignition switch to the ON position.
(e) Turn on the tester.
(f) Select the item ”DIAGNOSIS / ENHANCED OBD II / ACTIVE TEST”.
(g) According to the display on the tester, perform the ”ACTIVE TEST”.

HINT:

While driving, the shift position can be forcibly changed with the hand−held tester.

Comparing the shift position commanded by the ACTIVE TEST with the actual shift position enables you to confirm the problem (See page DI−1150).

Item	Test Details	Diagnostic Note
SHIFT	[Test Details] Operate the shift solenoid valve and set each shift position by yourself. [Vehicle Condition] Less than 50 km/h (31 mph) [Others] • Press ”→” button: Shift up • Press ”←” button: Shift down	Possible to check the operation of the shift solenoid valves.

HINT:

- This test can be conducted when the vehicle speed is 50 km/h (31 mph) or less.
- The 4th to 5th up−shiftings must be performed with the accelerator pedal released.
- The 5th to 4th down−shiftings must be performed with the accelerator pedal released.
- Do not operate the accelerator pedal for at least 2 seconds after shifting and do not shift successively.
- The shift position commanded by the ECM is shown in the DATA LIST (SHIFT) display on the hand−held tester.
- The shift solenoid valve S1 is turned on/off normally when the shift lever is in the D position:

ECM command gearshift	1st	2nd	3rd	4th	5th
Shift solenoid valve S1	ON	ON	OFF	OFF	OFF

1	**Check other DTCs output (in addition to DTC P0751).**

PREPARATION:

(a) Turn the ignition switch off.
(b) Connect the OBD II scan tool or hand−held tester to the DLC3.
(c) Turn the ignition switch to the ON position.
(d) Turn on the tester.
(e) Select the item ”DIAGNOSIS / ENHANCED OBD II / DTC INFO / CURRENT CODES”.

CHECK:

Read the DTCs using the OBD II scan tool or the hand−held tester.

RESULT:

Display (DTC output)	Proceed to
Only ”P0751” is output	A
”P0751” and other DTCs	B

HINT:

If any other codes besides ”P0751” are output, perform troubleshooting for those DTCs first.

B → **Go to DTC chart (See page DI−1156).**

A

2	Check shift solenoid valve S1 operation.

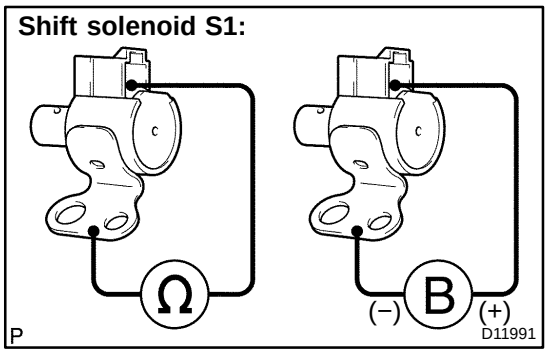

PREPARATION:

Remove the shift solenoid valve S1 (See page AT−12).

CHECK:

Measure the resistance according to the value(s) in the table below.

OK:

Tester Connection	Specified Condition 20°C (68°F)
Solenoid Connector (S1) − Solenoid Body (S1)	11 to 15 Ω

CHECK:

Connect the positive (+) lead to the terminal of the solenoid connector, and the negative (−) lead to the solenoid body.

OK:

The solenoid makes an operating sound.

NG → **Replace shift solenoid valve S1 (See page AT−12).**

OK

3	Inspect valve body (See page AT−12).

OK:

There are no foreign objects on each valve.

NG → **Repair or replace valve body.**

OK

Repair or replace transmission (See page AT−34).

DIDWR−01

DTC	P0756	Shift Solenoid ”B” Performance (Shift Solenoid Valve S2)

SYSTEM DESCRIPTION

The ECM uses signals from the output shaft speed sensor and input speed sensor to detect the actual gear position (1st, 2nd, 3rd, 4th or 5th gear).
Then the ECM compares the actual gear with the shift schedule in the ECM memory to detect mechanical problems of the shift solenoid valves, valve body or automatic transmission (clutch, brake or gear, etc.).

DTC No.	DTC Detection Condition	Trouble Area
P0756	The gear required by the ECM does not match the actual gear when driving (2−trip detection logic)	• Shift solenoid valve S2 remains open or closed • Valve body is blocked • Automatic transmission (clutch, brake or gear, etc.)

MONITOR DESCRIPTION

This DTC indicates ”stuck ON malfunction” or ”stuck OFF malfunction” of the shift solenoid valve S2.
The ECM commands gear shifts by turning the shift solenoid valves ”ON/OFF”. When the gear position commanded by the ECM and the actual gear position are not the same, the ECM illuminates the MIL and stores the DTC.

MONITOR STRATEGY

Related DTCs	P0756	Shift solenoid valve S2/OFF malfunction
		Shift solenoid valve S2/ON malfunction
Required sensors/Components	Main	Shift solenoid valve S2
	Sub	Vehicle speed sensor, Throttle position sensor, Speed sensor (NT), Speed sensor (NO)
Frequency of operation	Continuous	
Duration	OFF malfunction (A), (B), (C)	0.4 sec.
	OFF malfunction (D)	Immediate
	ON malfunction (A) and (B)	0.4 sec.
	ON malfunction (C)	3 sec.
	ON malfunction (D)	0.5 sec.
MIL operation	2 driving cycles	
Sequence of operation	None	

TYPICAL ENABLING CONDITIONS

Item	Specification	
	Minimum	Maximum
All:		
Turbine speed sensor circuit	Not circuit malfunction	
Output speed sensor circuit	Not circuit malfunction	
Shift solenoid valve S1 circuit	Not circuit malfunction	
Shift solenoid valve S2 circuit	Not circuit malfunction	
Shift solenoid valve SR circuit	Not circuit malfunction	
Shift solenoid valve SL1 circuit	Not circuit malfunction	
Shift solenoid valve SL2 circuit	Not circuit malfunction	
ECT (Engine coolant temperature) sensor circuit	Not circuit malfunction	
KCS sensor circuit	Not circuit malfunction	
ETCS (Electric throttle control system)	Not system down	
Transmission range	”D”	
ECT	40˚C (104˚F) or more	−
Spark advance from Max. retard timing by KCS control	0˚ CA or more	−
Engine	Starting	
Transfer range	”HIGH”*1	
Transfer range ”HIGH” *1 (This condition is applied only 4WD)		
*1 Following conditions met		
Vehicle speed sensor circuit	Not circuit malfunction	
Output shaft speed sensor circuit	Not circuit malfunction	
Transfer output speed	143 rpm or more	−
NO/NOtf (Transfer input speed/Transfer output speed)	0.9 to 1.1	
OFF malfunction (A)		
ECM selected gear	1st	
Vehicle speed	2 to 40 km/h (1.2 to 24.9 mph)	
Throttle valve opening angle	7.0% or more at 2,000 rpm (Conditions vary with engine speed)	−
OFF malfunction (B)		
ECM selected gear	2nd	
Vehicle speed	2 km/h (1.2 mph) or more	−
Output speed	2nd → 1st down shift point or more	−
Throttle valve opening angle	7.0% or more at 2,000 rpm (Conditions vary with engine speed)	−
OFF malfunction (C)		
Current ECM selected gear	5th	
Last ECM selected gear	4th	
Continuous time for ECM selecting 4th gear	2 sec. or more	−
Actual gear when ECM selected 4th gear	4th	
OFF malfunction (D)		
Current ECM selected gear	5th	

Last ECM selected gear	4th	
ON malfunction (A)		
ECM selected gear	1st	
Vehicle speed	2 to 40 km/h (1.2 to 24.9 mph)	
Throttle valve opening angle	7.0% or more at 2,000 rpm (Conditions vary with engine speed)	−
ON malfunction (B)		
ECM selected gear	4th	
Vehicle speed	2 km/h (1.2 mph) or more	−
Throttle valve opening angle	7.0% or more at 2,000 rpm (Conditions vary with engine speed)	−
ON malfunction (C)		
Current ECM selected gear	5th	
Last ECM selected gear	4th	
Vehicle speed (During transition from 4th to 5th gear)	−	Less than 100 km/h (62 mph)
ON malfunction (D)		
ECM selected gear	5th	
Engine speed − Turbine speed (NE − NT) (After transition from 4th to 5th gear)	−	Less than 150 rpm
Vehicle speed (After transition from 4th to 5th gear)	−	Less than 100 km/h (62 mph)

TYPICAL MALFUNCTION THRESHOLDS

Detection criteria	Threshold
[OFF malfunction]	
All of the following conditions are met: Conditions (A), (B), (C) and (D)	
2 detections are necessary per driving cycle 1st detection; temporary flag ON 2nd detection; pending fault code ON	
OFF malfunction (A) and (B)	
Turbine speed/Output speed	3.30 to 7.50
OFF malfunction (C)	
Turbine speed/Output speed	0.65 to 0.79
OFF malfunction (D)	
Output record from ECM for 4th → 5th upshifting	Recorded
[ON malfunction]	
Both of the following conditions are met: ON malfunction (A) or (B), and ON malfunction (C) or (D)	
ON malfunction (A)	
Turbine speed/Output speed	1.91 to 2.35
ON malfunction (B)	
Turbine speed/Output speed	1.28 to 1.53
ON malfunction (C)	
Turbine speed − Output speed x 4th gear ratio (NT − NO x 4th gear ratio)	1,000 rpm or more

ON malfunction (D)	
Turbine speed − Output speed x 5th gear ratio (NT − NO x 5th gear ratio)	1,000 rpm or more

INSPECTION PROCEDURE

HINT:

Performing the ACTIVE TEST using the hand−held tester allows the relay, VSV, actuator and so on to operate without parts removal. Performing the ACTIVE TEST as the first step of troubleshooting is one method to shorten labor time.

It is possible to display the DATA LIST during the ACTIVE TEST.

(a) Warm up the engine.
(b) Turn the ignition switch off.
(c) Connect the hand−held tester to the DLC3.
(d) Turn the ignition switch to the ON position.
(e) Turn on the tester.
(f) Select the item ”DIAGNOSIS / ENHANCED OBD II / ACTIVE TEST”.
(g) According to the display on the tester, perform the ”ACTIVE TEST”.

HINT:

While driving, the shift position can be forcibly changed with the hand−held tester.

Comparing the shift position commanded by the ACTIVE TEST with the actual shift position enables you to confirm the problem (See page DI−1150).

Item	Test Details	Diagnostic Note
SHIFT	[Test Details] Operate the shift solenoid valve and set each shift position by yourself. [Vehicle Condition] Less than 50 km/h (31 mph) [Others] • Press ”→” button: Shift up • Press ”←” button: Shift down	Possible to check the operation of the shift solenoid valves.

HINT:

- This test can be conducted when the vehicle speed is 50 km/h (31 mph) or less.
- The 4th to 5th up−shiftings must be performed with the accelerator pedal released.
- The 5th to 4th down−shiftings must be performed with the accelerator pedal released.
- Do not operate the accelerator pedal for at least 2 seconds after shifting and do not shift successively.
- The shift position commanded by the ECM is shown in the DATA LIST (SHIFT) display on the hand−held tester.
- The shift solenoid valve S2 is turned on/off normally when the shift lever is in the D position:

ECM command gearshift	1st	2nd	3rd	4th	5th
Shift solenoid valve S2	OFF	ON	ON	OFF	OFF

1	**Check other DTCs output (in addition to DTC P0756).**

PREPARATION:

(a) Turn the ignition switch off.
(b) Connect the OBD II scan tool or hand−held tester to the DLC3.
(c) Turn the ignition switch to the ON position.
(d) Turn on the tester.
(e) Select the item ”DIAGNOSIS / ENHANCED OBD II / DTC INFO / CURRENT CODES”.

CHECK:

Read the DTCs using the OBD II scan tool or the hand−held tester.

RESULT:

Display (DTC output)	Proceed to
Only ”P0756” is output	A
”P0756” and other DTCs	B

HINT:

If any other codes besides ”P0756” are output, perform troubleshooting for those DTCs first.

B → **Go to DTC chart (See page DI−1156).**

A

2	**Inspect shift solenoid valve S2 operation.**

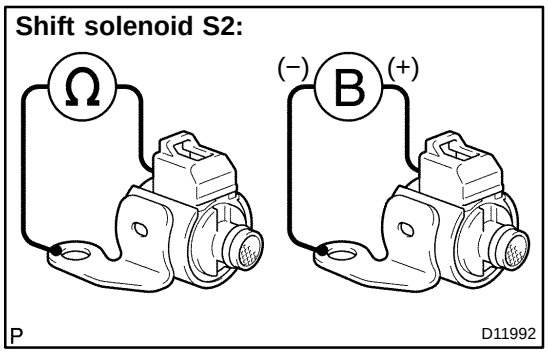

PREPARATION:

Remove the shift solenoid valve S2 (See page AT−12).

CHECK:

Measure the resistance according to the value(s) in the table below.

OK:

Tester Connection	Specified Condition 20°C (68°F)
Solenoid Connector (S2) − Solenoid Body (S2)	11 to 15 Ω

CHECK:

Connect the positive (+) lead to the terminal of the solenoid connector, and the negative (−) lead to the solenoid body.

OK:

The solenoid makes an operating sound.

NG → **Replace shift solenoid valve S2 (See page AT−12).**

OK

3	**Inspect valve body (See page AT−12).**

OK:

There are no foreign objects on each valve.

NG → **Repair or replace valve body.**

OK

Repair or replace transmission (See page AT−34).

DIDWS−01

DTC	P0771	Shift Solenoid ”E” Performance (Shift Solenoid Valve SR)

SYSTEM DESCRIPTION

The ECM uses signals from the output shaft speed sensor and input speed sensor to detect the actual gear position (1st, 2nd, 3rd, 4th or 5th gear).
Then the ECM compares the actual gear with the shift schedule in the ECM memory to detect mechanical problems of the shift solenoid valves, valve body or automatic transmission (clutch, brake or gear, etc.).

DTC No.	DTC Detection Condition	Trouble Area
P0771	The gear required by the ECM does not match the actual gear when driving (2−trip detection logic)	• Shift solenoid valve SR remains open or closed • Shift solenoid valve SL1 remains open or closed • Valve body is blocked • Automatic transmission (clutch, brake or gear, etc.)

MONITOR DESCRIPTION

This DTC indicates ”stuck ON malfunction” or ”stuck OFF malfunction” of the shift solenoid valve SR or SL1. The ECM commands gear shifts by turning the shift solenoid valves ”ON/OFF”. When the gear position commanded by the ECM and the actual gear position are not the same, the ECM illuminates the MIL and stores the DTC.

MONITOR STRATEGY

Related DTCs	P0771	Shift solenoid valve SR/Rationality check
Required sensors/Components	Main	Shift solenoid valve SR
	Sub	Speed sensor (NT), Speed sensor (NO), Crankshaft position sensor (NE)
Frequency of operation	Continuous	
Duration	OFF malfunction (A)	0.4 sec.
	OFF malfunction (B) and (C)	Immediate
	ON malfunction	0.15 sec.
MIL operation	2 driving cycles	
Sequence of operation	None	

TYPICAL ENABLING CONDITIONS

Item	Specification	
	Minimum	Maximum
All:		
Turbine speed sensor circuit	Not circuit malfunction	
Output speed sensor circuit	Not circuit malfunction	
Shift solenoid valve S1 circuit	Not circuit malfunction	
Shift solenoid valve S2 circuit	Not circuit malfunction	
Shift solenoid valve SR circuit	Not circuit malfunction	
Shift solenoid valve SL1 circuit	Not circuit malfunction	
Shift solenoid valve SL2 circuit	Not circuit malfunction	
ECT (Engine coolant temperature) sensor circuit	Not circuit malfunction	
KCS sensor circuit	Not circuit malfunction	

ETCS (Electric throttle control system)	Not system down	
Transmission range	”D”	
ECT	40˚C (104˚F) or more	−
Spark advance from Max. retard timing by KCS control	0˚ CA or more	−
Engine	Starting	
Transfer range	”HIGH”*1	
Transfer range ”HIGH” *1 (This condition is applied only 4WD)		
*1 Following conditions met		
Vehicle speed sensor circuit	Not circuit malfunction	
Output shaft speed sensor circuit	Not circuit malfunction	
Transfer output speed	143 rpm or more	−
NO/NOtf (Transfer input speed/Transfer output speed)	0.9 to 1.1	
OFF malfunction (A)		
ECM selected gear	5th	
Vehicle speed	2 km/h (1.2 mph) or more	−
Throttle valve opening angle	7.0% or more at 2,000 rpm (Conditions vary with engine speed)	−
OFF malfunction (B)		
Current ECM selected gear	5th	
Last ECM selected gear	4th	
Continuous time for ECM selecting 4th gear	2 sec. or more	−
OFF malfunction (C)		
Current ECM selected gear	5th	
Last ECM selected gear	4th	
ON malfunction		
Current ECM selected gear	2th	
Last ECM selected gear	1st	
Throttle valve opening angle (During transition from 1st to 2nd gear)	7.0% or more at 2,000 rpm (Conditions vary with engine speed)	−

TYPICAL MALFUNCTION THRESHOLDS

Detection criteria	Threshold
[OFF malfunction]	
All of the following conditions are met: OFF malfunctions (A), (B) and (C)	
2 detections are necessary per driving cycle 1st detection; temporary flag ON 2nd detection; temporary pending fault code ON	
OFF malfunction (A)	
Turbine speed/Output speed	0.93 to 1.07
OFF malfunction (B)	
Turbine speed/Output speed	Not change as follow 0.93 to 1.07 ↓ 0.65 to 0.79

OFF malfunction (C)	
Output record from ECM for 4th → 5th upshifting	Recorded
[ON malfunction]	
2 detections are necessary per driving cycle 1st detection; temporary flag ON 2nd detection; temporary pending fault code ON	
Turbine speed − Output speed x 1st gear ratio (NT − NO x 1st gear ratio)	150 rpm or more

INSPECTION PROCEDURE

HINT:

Performing the ACTIVE TEST using the hand−held tester allows the relay, VSV, actuator and so on to operate without parts removal. Performing the ACTIVE TEST as the first step of troubleshooting is one method to shorten labor time.

It is possible to display the DATA LIST during the ACTIVE TEST.

(a) Warm up the engine.
(b) Turn the ignition switch off.
(c) Connect the hand−held tester to the DLC3.
(d) Turn the ignition switch to the ON position.
(e) Turn on the tester.
(f) Select the item ”DIAGNOSIS / ENHANCED OBD II / ACTIVE TEST”.
(g) According to the display on the tester, perform the ”ACTIVE TEST”.

HINT:

While driving, the shift position can be forcibly changed with the hand−held tester.

Comparing the shift position commanded by the ACTIVE TEST with the actual shift position enables you to confirm the problem (See page DI−1150).

Item	Test Details	Diagnostic Note
SHIFT	[Test Details] Operate the shift solenoid valve and set each shift position by yourself. [Vehicle Condition] Less than 50 km/h (31 mph) [Others] • Press ”→” button: Shift up • Press ”←” button: Shift down	Possible to check the operation of the shift solenoid valves.

HINT:

- This test can be conducted when the vehicle speed is 50 km/h (31 mph) or less.
- The 4th to 5th up−shiftings must be performed with the accelerator pedal released.
- The 5th to 4th down−shiftings must be performed with the accelerator pedal released.
- Do not operate the accelerator pedal for at least 2 seconds after shifting and do not shift successively.
- The shift position commanded by the ECM is shown in the DATA LIST (SHIFT) display on the hand−held tester.
- The shift solenoid valve SR and SL1 is turned on/off normally when the shift lever is in the D position:

ECM command gearshift	1st	2nd	3rd	4th	5th
Shift solenoid valve SR	OFF	OFF	OFF	OFF	ON
Shift solenoid valve SL1	OFF	OFF	OFF	OFF	ON

1	**Check other DTCs output (in addition to DTC P0771).**

PREPARATION:

(a) Turn the ignition switch off.
(b) Connect the OBD II scan tool or hand−held tester to the DLC3.
(c) Turn the ignition switch to the ON position.
(d) Turn on the tester.
(e) Select the item ”DIAGNOSIS / ENHANCED OBD II / DTC INFO / CURRENT CODES”.

CHECK:

Read the DTCs using the OBD II scan tool or the hand−held tester.

RESULT:

Display (DTC output)	Proceed to
Only ”P0771” is output	A
”P0771” and other DTCs	B

HINT:

If any other codes besides ”P0771” are output, perform troubleshooting for those DTCs first.

B → **Go to DTC chart (See page DI−1156).**

A

2	**Inspect shift solenoid valve SR operation.**

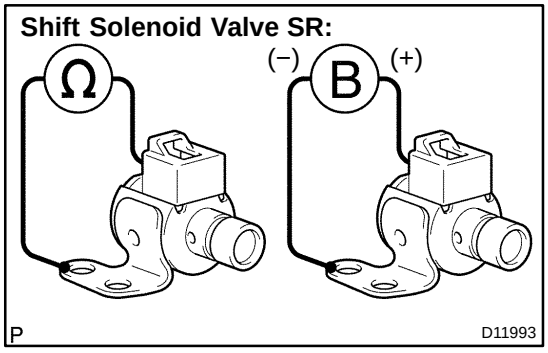

PREPARATION:

Remove the shift solenoid valve SR (See page AT−12).

CHECK:

Measure the resistance according to the value(s) in the table below.

OK:

Tester Connection	Specified Condition 20°C (68°F)
Solenoid Connector (SR) − Solenoid Body (SR)	11 to 15 Ω

CHECK:

Connect the positive (+) lead to the terminal of the solenoid connector, and the negative (−) lead to the solenoid body.

OK:

The solenoid makes an operating sound.

NG → **Replace shift solenoid valve SR (See page AT−12).**

OK

3	Inspect shift solenoid valve SL1.

Shift Solenoid Valve SL1:

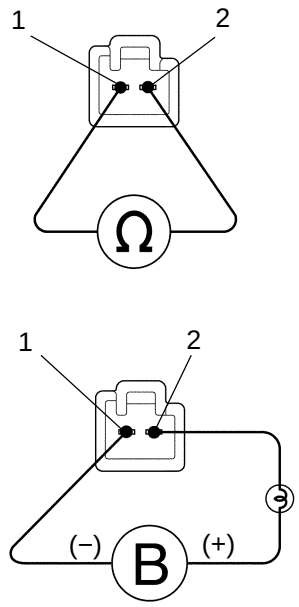

D12795

PREPARATION:

Remove the shift solenoid valve SL1 (See page AT−12).

CHECK:

Measure the resistance according to the value(s) in the table below.

OK:

Tester Connection	Specified Condition 20°C (68°F)
1 − 2	5.0 to 5.6 Ω

CHECK:

Connect the positive (+) lead with a 21 W bulb to terminal 2 and the negative (−) lead to terminal 1 of the solenoid valve connector, then check the movement of the valve.

OK:

The solenoid makes an operating sound.

NG → **Replace the shift solenoid valve SL1 (See page AT−12).**

OK

4	Inspect valve body (See page AT−12).

OK:

There are no foreign objects on each valve.

NG → **Repair or replace valve body.**

OK

Repair or replace transmission (See page AT−34).

DIDWT−01

DTC	P0776	Pressure Control Solenoid ”B” Performance (Shift Solenoid Valve SL2)

SYSTEM DESCRIPTION

The ECM uses signals from the output shaft speed sensor and input speed sensor to detect the actual gear position (1st, 2nd, 3rd, 4th or 5th gear).
Then the ECM compares the actual gear with the shift schedule in the ECM memory to detect mechanical problems of the shift solenoid valves, valve body or automatic transmission (clutch, brake or gear, etc.).

DTC No.	DTC Detection Condition	Trouble Area
P0776	The gear required by the ECM does not match the actual gear when driving (2−trip detection logic)	• Shift solenoid valve SL2 remains open or closed • Valve body is blocked • Automatic transmission (clutch, brake or gear, etc.)

MONITOR DESCRIPTION

This DTC indicates ”stuck ON malfunction” or ”stuck OFF malfunction” of the shift solenoid valve SL2.
The ECM commands gear shifts by turning the shift solenoid valves ”ON/OFF”. When the gear position commanded by the ECM and the actual gear position are not the same, the ECM illuminates the MIL and stores the DTC.

MONITOR STRATEGY

Related DTCs	P0776	Shift solenoid valve SL2/ON malfunction
Required sensors/Components	Main	Shift solenoid valve SL2
	Sub	Speed sensor (NT), Speed sensor (NO), Crankshaft position sensor (NE)
Frequency of operation	Continuous	
Duration	ON malfunctions (A), (B) and (C)	0.4 sec.
	ON malfunction (D)	3 sec.
	ON malfunction (E)	0.5 sec.
MIL operation	2 driving cycles	
Sequence of operation	None	

TYPICAL ENABLING CONDITIONS

Item	Specification	
	Minimum	Maximum
All:		
Turbine speed sensor circuit	Not circuit malfunction	
Output speed sensor circuit	Not circuit malfunction	
Shift solenoid valve S1 circuit	Not circuit malfunction	
Shift solenoid valve S2 circuit	Not circuit malfunction	
Shift solenoid valve SR circuit	Not circuit malfunction	
Shift solenoid valve SL1 circuit	Not circuit malfunction	
Shift solenoid valve SL2 circuit	Not circuit malfunction	
ECT (Engine coolant temperature) sensor circuit	Not circuit malfunction	
KCS sensor circuit	Not circuit malfunction	
ETCS (Electric throttle control system)	Not system down	
Transmission range	”D”	
ECT	40˚C (104˚F) or more	−
Spark advance from Max. retard timing by KCS control	0˚ CA or more	−
Engine	Starting	
Transfer range	”HIGH”*1	
Transfer range ”HIGH” *1 (This condition is applied only 4WD)		
*1 Following conditions met		
Vehicle speed sensor circuit	Not circuit malfunction	
Output shaft speed sensor circuit	Not circuit malfunction	
Transfer output speed	143 rpm or more	−
NO/NOtf (Transfer input speed/Transfer output speed)	0.9 to 1.1	
ON malfunction (A)		
ECM selected gear	1st	
Vehicle speed	2 to 40 km/h (1.2 to 24.9 mph)	
Throttle valve opening angle	7.0% or more at 2,000 rpm (Conditions vary with engine speed)	−
ON malfunction (B)		
ECM selected gear	3rd	
Vehicle speed	2 km/h (1.2 mph) or more	−
Throttle valve opening angle	7.0% or more at 2,000 rpm (Conditions vary with engine speed)	−
ON malfunction (C)		
ECM selected gear	4th	
Vehicle speed	2 km/h (1.2 mph) or more	−
Throttle valve opening angle	7.0% or more at 2,000 rpm (Conditions vary with engine speed)	−
ON malfunction (D)		
Current ECM selected gear	5th	
Last ECM selected gear	4th	

Vehicle speed (During transition from 4th to 5th gear)	−	Less than 100 km/h (62.2 mph)
ON malfunction (E)		
ECM selected gear	5th	
Engine speed − Turbine speed (NE − NT) (After transition from 4th to 5th gear)	−	Less than 150 rpm
Vehicle speed (After transition from 4th to 5th gear)	−	Less than 100 km/h (62 mph)

TYPICAL MALFUNCTION THRESHOLDS

Detection criteria	Threshold
Both of the following conditions are met: • **ON malfunctions (A) and (B), or ON malfunction (C)** • **ON malfunction (D) or (E)**	
ON malfunction (A)	
Turbine speed/Output speed	3.30 to 7.50
ON malfunction (B)	
Turbine speed/Output speed	1.28 to 1.53
ON malfunction (C)	
Turbine speed/Output speed	0.93 to 1.07
ON malfunction (D)	
Turbine speed − Output speed x 4th gear ratio (NT − NO x 4th gear ratio)	1,000 rpm or more
ON malfunction (E)	
Turbine speed − Output speed x 5th gear ratio (NT − NO x 5th gear ratio)	1,000 rpm or more

INSPECTION PROCEDURE

HINT:

Performing the ACTIVE TEST using the hand−held tester allows the relay, VSV, actuator and so on to operate without parts removal. Performing the ACTIVE TEST as the first step of troubleshooting is one method to shorten labor time.

It is possible to display the DATA LIST during the ACTIVE TEST.

(a) Warm up the engine.
(b) Turn the ignition switch off.
(c) Connect the hand−held tester to the DLC3.
(d) Turn the ignition switch to the ON position.
(e) Turn on the tester.
(f) Select the item ”DIAGNOSIS / ENHANCED OBD II / ACTIVE TEST”.
(g) According to the display on the tester, perform the ”ACTIVE TEST”.

HINT:

While driving, the shift position can be forcibly changed with the hand−held tester.

Comparing the shift position commanded by the ACTIVE TEST with the actual shift position enables you to confirm the problem (See page DI−1150).

Item	Test Details	Diagnostic Note
SHIFT	[Test Details] Operate the shift solenoid valve and set each shift position by yourself. [Vehicle Condition] Less than 50 km/h (31 mph) [Others] • Press ”→” button: Shift up • Press ”←” button: Shift down	Possible to check the operation of the shift solenoid valves.

HINT:

- This test can be conducted when the vehicle speed is 50 km/h (31 mph) or less.
- The 4th to 5th up−shiftings must be performed with the accelerator pedal released.
- The 5th to 4th down−shiftings must be performed with the accelerator pedal released.
- Do not operate the accelerator pedal for at least 2 seconds after shifting and do not shift successively.
- The shift position commanded by the ECM is shown in the DATA LIST (SHIFT) display on the hand−held tester.
- The shift solenoid valve SL2 is turned on/off normally when the shift lever is in the D position:

ECM command gearshift	1st	2nd	3rd	4th	5th
Shift solenoid valve SL2	ON	ON	ON	ON	OFF

1	**Check other DTCs output (in addition to DTC P0776).**

PREPARATION:

(a) Turn the ignition switch off.
(b) Connect the OBD II scan tool or hand−held tester to the DLC3.
(c) Turn the ignition switch to the ON position.
(d) Turn on the tester.
(e) Select the item ”DIAGNOSIS / ENHANCED OBD II / DTC INFO / CURRENT CODES”.

CHECK:

Read the DTCs using the OBD II scan tool or the hand−held tester.

RESULT:

Display (DTC output)	Proceed to
Only ”P0776” is output	A
”P0776” and other DTCs	B

HINT:

If any other codes besides ”P0776” are output, perform troubleshooting for those DTCs first.

B → **Go to DTC chart (See page DI−1156).**

A

2	Inspect shift solenoid valve SL2.

Shift Solenoid Valve SL2:

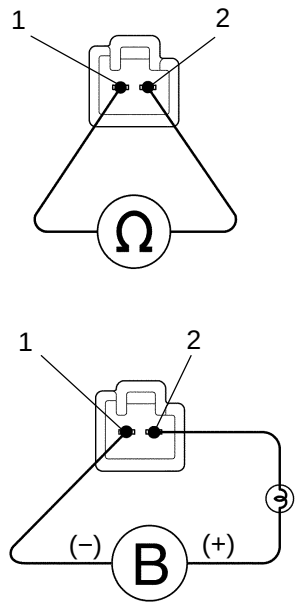

D12795

PREPARATION:

Remove the shift solenoid valve SL2 (See page AT−12).

CHECK:

Measure the resistance according to the value(s) in the table below.

OK:

Tester Connection	Specified Condition 20°C (68°F)
1 − 2	5.0 to 5.6 Ω

CHECK:

Connect the positive (+) lead with a 21 W bulb to terminal 2 and the negative (−) lead to terminal 1 of the solenoid valve connector, then check the movement of the valve.

OK:

The solenoid makes an operating sound.

NG → **Replace the shift solenoid valve SL2 (See page AT−12).**

OK

3	Inspect valve body (See page AT−12).

OK:

There are no foreign objects on each valve.

NG → **Repair or replace valve body.**

OK

Repair or replace transmission (See page AT−34).

DIDWU−01

DTC	P0778	Pressure Control Solenoid ”B” Electrical (Shift Solenoid Valve SL2)

CIRCUIT DESCRIPTION

Shifting from 1st to 5th is performed in combination with ”ON” and ”OFF” operation of the shift solenoid valves SL1, SL2, S1, S2 and SR which are controlled by the ECM. If an open or short circuit occurs in either of the shift solenoid valves, the ECM controls the remaining normal shift solenoid valves to allow the vehicle to be operated smoothly (See page DI−1150).

DTC No.	DTC Detection Condition	Trouble Area
P0778	The ECM checks for an open or short in the shift solenoid valve SL2 circuit while driving and shifting gears. (1−trip detection logic) • Output signal duty equals to 100%. (NOTE: SL2 output signal duty is less than 100% under normal condition.)	• Open or short in shift solenoid valve SL2 circuit • Shift solenoid valve SL2 • ECM

MONITOR DESCRIPTION

This DTC indicates an open or short in the shift solenoid valve SL2 circuit. The ECM commands gear shift by turning the shift solenoid valves ”ON/OFF”. When there is an open or short circuit in any shift solenoid valve circuit, the ECM detects the problem and illuminates the MIL and stores the DTC. And the ECM performs the fail−safe function and turns the other normal shift solenoid valves ”ON/OFF”. (In case of an open or short circuit, the ECM stops sending current to the circuit.)
While driving and shifting gears, if the ECM detects an open or short in the shift solenoid valve SL2 circuit, the ECM determines there is a malfunction (See page DI−1150).

MONITOR STRATEGY

Related DTCs	P0778	Shift solenoid valve SL2/Range check
Required sensors/Components	Shift solenoid valve SL2	
Frequency of operation	Continuous	
Duration	1 sec.	
MIL operation	Immediate	
Sequence of operation	None	

TYPICAL ENABLING CONDITIONS

Item	Specification	
	Minimum	Maximum
The monitor will run whenever this DTC is not present.	See page DI−1128	
Battery voltage	10 V or more	−
CPU commanded duty	−	Less than 75%
Ignition switch	ON	
Starter	OFF	

TYPICAL MALFUNCTION THRESHOLDS

Detection criteria	Threshold
Output signal duty	100%

COMPONENT OPERATING RANGE

Parameter	Standard value
Output signal duty	Less than 100%

WIRING DIAGRAM

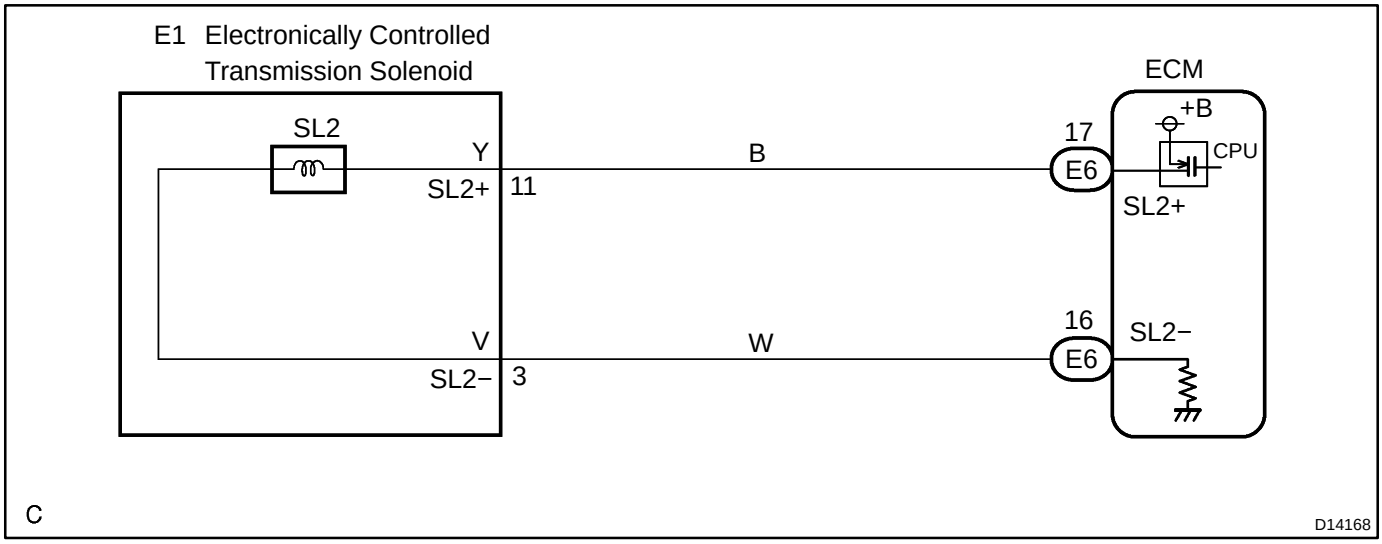

INSPECTION PROCEDURE

HINT:

- The shift solenoid valve SL2 is turned on/off normally when the shift lever is in the D position:

ECM command gearshift	1st	2nd	3rd	4th	5th
Shift solenoid valve SL2	ON	ON	ON	ON	OFF

1	**Inspect transmission wire.**

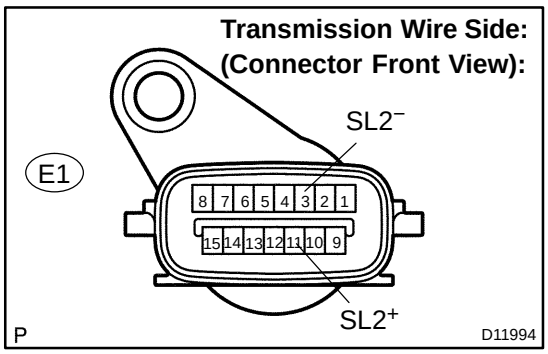

PREPARATION:

Disconnect the transmission wire connector.

CHECK:

Measure the resistance according to the value(s) in the table below.

OK:

Tester Connection	Specified Condition 20°C (68°F)
11 (SL2+) − 3 (SL2−)	5.0 to 5.6 Ω

CHECK:

Measure the resistance according to the value(s) in the table below.

OK:

Tester Connection	Specified Condition
11 (SL2+) − Body ground	10 kΩ or higher
3 (SL2−) − Body ground	↑

NG → **Go to step 3.**

OK

2	Check harness and connector (Transmission wire − ECM)

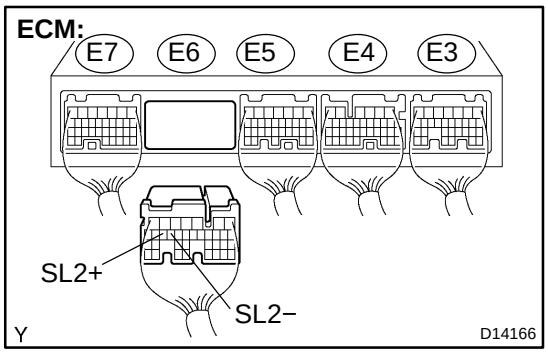

PREPARATION:

(a) Connect the transmission wire connector.

(b) Disconnect the ECM connector.

CHECK:

Measure the resistance according to the value(s) in the table below.

OK:

Tester Connection	Specified Condition 20°C (68°F)
E6 − 17 (SL2+) − E6 − 16 (SL2−)	5.0 to 5.6 Ω

CHECK:

Measure the resistance according to the value(s) in the table below.

OK:

Tester Connection	Specified Condition
E6 − 17 (SL2+) − Body ground	10 kΩ or higher
E6 − 16 (SL2−) − Body ground	↑

NG → **Repair or replace harness or connector (See page IN−30).**

OK →

Replace the ECM (See page SF−82).

3	Check shift solenoid valve SL2.

Shift Solenoid Valve SL2:

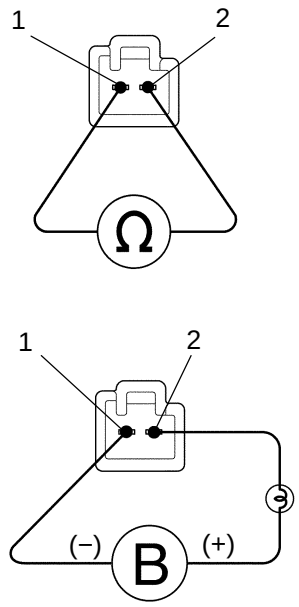

D12795

PREPARATION:

Remove the shift solenoid valve SL2 (See page AT−12).

CHECK:

Measure the resistance according to the value(s) in the table below.

OK:

Tester Connection	Specified Condition 20°C (68°F)
1 − 2	5.0 to 5.6 Ω

CHECK:

Connect the positive (+) lead with a 21 W bulb to terminal 2 and the negative (−) lead to terminal 1 of the solenoid valve connector, then check the movement of the valve.

OK:

The solenoid makes an operating sound.

NG → **Replace the shift solenoid valve SL2 (See page AT−12).**

OK

Repair or replace the transmission wire (See page AT−9).

DIDWV−01

DTC	P0781	1−2 Shift (1−2 Shift Valve)

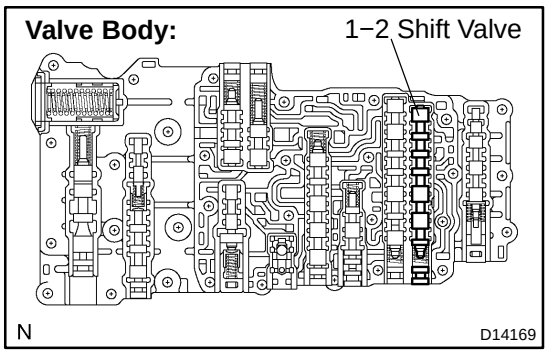

SYSTEM DESCRIPTION

The 1−2 shift valve performs shifting to 1st gear and other gears.

DTC No.	DTC Detection Condition	Trouble Area
P0781	The gear required by the ECM does not match the actual gear when driving (2−trip detection logic)	• Valve body is blocked up or stuck (1−2 shift valve) • Automatic transmission (clutch, brake or gear, etc.)

MONITOR DESCRIPTION

This DTC indicates that the 1−2 shift valve in the valve body is locked in the direction the spring compresses. The ECM commands gear shifts by turning the shift solenoid valves ”ON/OFF” and switching oil pressure to the valves in the valve body.

The ECM calculates the ”actual” transmission gear by comparing the signals from the input speed sensor (NCO) and the output speed sensor (SP2). The ECM can detect many mechanical problems in the shift solenoids, valve body, and the transmission clutches, brakes, and gears. If the ECM detects that the actual gear position and the commanded gear position are different, it will illuminate the MIL and store the DTC .

MONITOR STRATEGY

Related DTCs	P0781	Valve body/Rationality check
Required sensors/Components	Main	Valve body
	Sub	Automatic transmission assembly, Speed sensor (NT), Speed sensor (NO), Vehicle speed sensor, Throttle speed sensor
Frequency of operation	Continuous	
Duration	Conditions (A) and (B)	0.4 sec.
	Condition (C)	3 sec.
	Condition (D)	0.5 sec.
MIL operation	2 driving cycles	
Sequence of operation	None	

TYPICAL ENABLING CONDITIONS

Item	Specification	
	Minimum	Maximum
All:		
Turbine speed sensor circuit	Not circuit malfunction	
Output speed sensor circuit	Not circuit malfunction	
Shift solenoid valve S1 circuit	Not circuit malfunction	
Shift solenoid valve S2 circuit	Not circuit malfunction	
Shift solenoid valve SR circuit	Not circuit malfunction	
Shift solenoid valve SL1 circuit	Not circuit malfunction	
Shift solenoid valve SL2 circuit	Not circuit malfunction	
ECT (Engine coolant temperature) sensor circuit	Not circuit malfunction	
KCS sensor circuit	Not circuit malfunction	
ETCS (Electric throttle control system)	Not system down	
Transmission range	”D”	
ECT	40˚C (104˚F) or more	−
Spark advance from Max. retard timing by KCS control	0˚ CA or more	−
Engine	Starting	
Transfer range	”HIGH”*1	
Transfer range ”HIGH” *1 (This condition is applied only 4WD)		
*1 Following conditions met		
Vehicle speed sensor circuit	Not circuit malfunction	
Output shaft speed sensor circuit	Not circuit malfunction	
Transfer output speed	143 rpm or more	−
NO/NOtf (Transfer input speed/Transfer output speed)	0.9 to 1.1	
Condition (A)		
ECM selected gear	2nd	
Vehicle speed	2 km/h (1.2 mph) or more	−
Output speed	2nd → 1st down shift point or more	−
Throttle valve opening angle	7.0% or more at 2,000 rpm (Conditions vary with engine speed)	−
Condition (B)		
ECM selected gear	4th	
Vehicle speed	2 km/h (1.2 mph) or more	−
Throttle valve opening angle	7.0% or more at 2,000 rpm (Conditions vary with engine speed)	−
Condition (C)		
Current ECM selected gear	5th	
Last ECM selected gear	4th	
Vehicle speed (During transition from 4th to 5th gear)	−	Less than 100 km/h (62.2 mph)
Condition (D)		
ECM selected gear	5th	

Engine speed − Turbine speed (NE − NT) (After transition from 4th to 5th gear)	−	Less than 150 rpm
Vehicle speed (After transition from 4th to 5th gear)	−	Less than 100 km/h (62.2 mph)

TYPICAL MALFUNCTION THRESHOLDS

Detection criteria	Threshold
Both of the following conditions are met: Condition (A), and Condition (B), (C) or (D)	
Condition (A)	
Turbine speed/Output speed	3.30 to 7.50
Condition (B)	
Turbine speed/Output speed	1.28 to 1.53
Condition (C)	
Turbine speed − Output speed x 4th gear ratio (NT − NO x 4th gear ratio)	1,000 rpm or more
Condition (D)	
Turbine speed − Output speed x 5th gear ratio (NT − NO x 5th gear ratio)	1,000 rpm or more

INSPECTION PROCEDURE

1	**Check other DTCs output (in addition to DTC P0781).**

PREPARATION:

(a) Turn the ignition switch off.
(b) Connect the OBD II scan tool or hand−held tester to the DLC3.
(c) Turn the ignition switch to the ON position.
(d) Turn on the tester.
(e) Select the item ”DIAGNOSIS / ENHANCED OBD II / DTC INFO / CURRENT CODES”.

CHECK:

Read the DTCs using the OBD II scan tool or the hand−held tester.

RESULT:

Display (DTC output)	Proceed to
Only ”P0781” is output	A
”P0781” and other DTCs	B

HINT:

If any other codes besides ”P0781” are output, perform troubleshooting for those DTCs first.

B → **Go to DTC chart (See page DI−1156).**

A

2	**Perform active test**

HINT:
Performing the ACTIVE TEST using the hand−held tester allows the relay, VSV, actuator and so on to operate without parts removal. Performing the ACTIVE TEST as the first step of troubleshooting is one method to shorten labor time.
It is possible to display the DATA LIST during the ACTIVE TEST.
(a) Warm up the engine.
(b) Turn the ignition switch off.
(c) Connect the hand−held tester to the DLC3.
(d) Turn the ignition switch to the ON position.
(e) Turn on the tester.
(f) Select the item ”DIAGNOSIS / ENHANCED OBD II / ACTIVE TEST”.
(g) According to the display on the tester, perform the ”ACTIVE TEST”.
HINT:
While driving, the shift position can be forcibly changed with the hand−held tester.
Comparing the shift position commanded by the ACTIVE TEST with the actual shift position enables you to confirm the problem (See page DI−1150).

Standard:

Item	Test Details	Diagnostic Note
SHIFT	[Test Details] Operate the shift solenoid valve and set each shift position by yourself. [Vehicle Condition] Less than 50 km/h (31 mph) [Others] • Press ”→” button: Shift up • Press ”←” button: Shift down	Possible to check the operation of the shift solenoid valves.

HINT:
- This test can be conducted when the vehicle speed is 50 km/h (31 mph) or less.
- The 4th to 5th up−shiftings must be performed with the accelerator pedal released.
- The 5th to 4th down−shiftings must be performed with the accelerator pedal released.
- Do not operate the accelerator pedal for at least 2 seconds after shifting and do not shift successively.
- The shift position commanded by the ECM is shown in the DATA LIST (SHIFT) display on the hand−held tester.

OK:

Gear position changes in accordance with the tester command.

NG → **Repair or replace valve body (See page AT−12).**

OK

3	**Clear the DTC and running test.**

CHECK:

Clear the DTC, and check DTC again after conducting the ”MONITOR DRIVE PATTERN FOR ECT TEST” (See page DI−1134).

OK:

No DTC code

NG → **Repair or replace valve body (See page AT−12).**

OK →

END

DIDWW−01

DTC	P0973	Shift Solenoid ”A” Control Circuit Low (Shift Solenoid Valve S1)

DTC	P0974	Shift Solenoid ”A” Control Circuit High (Shift Solenoid Valve S1)

CIRCUIT DESCRIPTION

Shifting from 1st to 5th is performed in combination with ”ON” and ”OFF” operation of the shift solenoid valves SL1, SL2, S1, S2 and SR which are controlled by the ECM. If an open or short circuit occurs in either of the shift solenoid valves, the ECM controls the remaining normal shift solenoid valves to allow the vehicle to be operated smoothly (See page DI−1150).

DTC No.	DTC Detection Condition	Trouble Area
P0973	ECM detects short in solenoid valve S1 circuit 2 times when solenoid valve S1 is operated (1−trip detection logic)	• Short in shift solenoid valve S1 circuit • Shift solenoid valve S1 • ECM
P0974	ECM detects open in solenoid valve S1 circuit 2 times when solenoid valve S1 is not operated (1−trip detection logic)	• Open in shift solenoid valve S1 circuit • Shift solenoid valve S1 • ECM

MONITOR DESCRIPTION

These DTCs indicate an open or short in the shift solenoid valve S1 circuit. When there is an open or short circuit in any shift solenoid valve circuit, the ECM detects the problem and illuminates the MIL and stores the DTC. When the shift solenoid valve S1 is on, if resistance is 8 Ω or less, the ECM determines there is a short in the shift solenoid valve S1 circuit.

When the shift solenoid valve S1 is off, if resistance is 100 kΩ or more, the ECM determines there is an open in the shift solenoid valve S1 circuit (See page DI−1150).

MONITOR STRATEGY

Related DTCs	P0973	Shift solenoid valve S1/Range check (Low resistance)
	P0974	Shift solenoid valve S1/Range check (High resistance)
Required sensors/Components	Shift solenoid valve S1	
Frequency of operation	Continuous	
Duration	0.064 sec.	
MIL operation	Immediate	
Sequence of operation	None	

TYPICAL ENABLING CONDITIONS

Item	Specification	
	Minimum	Maximum
The monitor will run whenever these DTCs are not present.	See page DI−1128	
Range check (Low resistance)		
Shift solenoid valve S1	ON	
Range check (High resistance)		
Shift solenoid valve S1	OFF	

TYPICAL MALFUNCTION THRESHOLDS

Detection criteria	Threshold
Range check (Low resistance)	
Shift solenoid valve S1 resistance	8 Ω or less
Range check (High resistance)	
Shift solenoid valve S1 resistance	100 kΩ or more

COMPONENT OPERATING RANGE

Parameter	Standard value
Shift solenoid valve S1	Resistance: 11 to 15 Ω at 20°C (68°F)

WIRING DIAGRAM

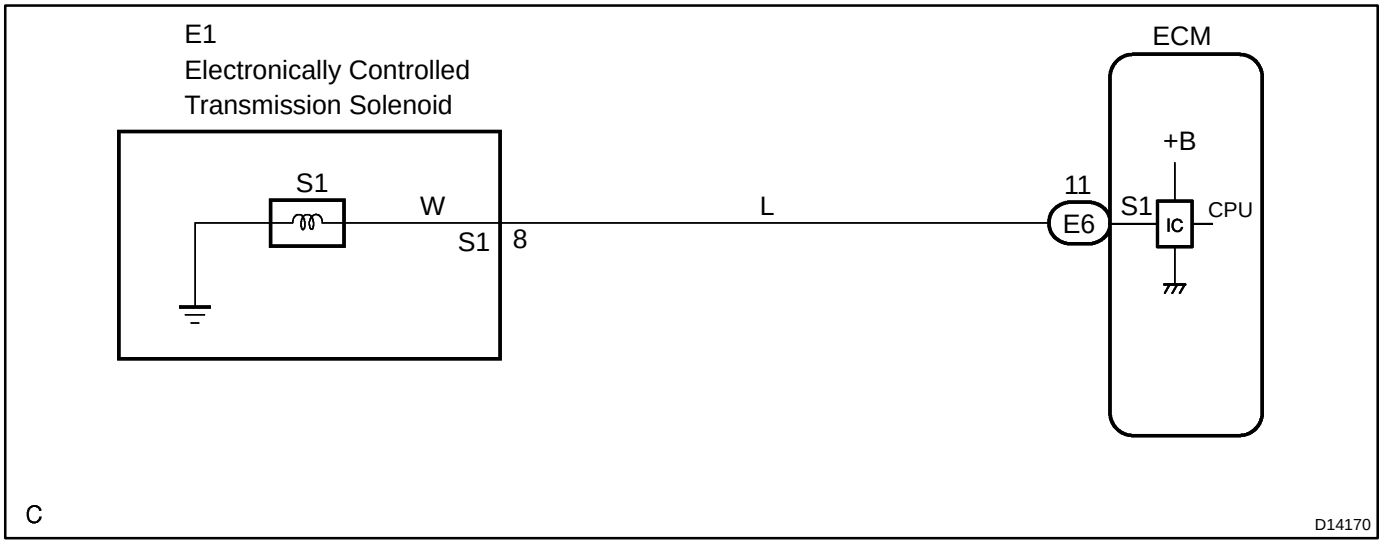

INSPECTION PROCEDURE

HINT:

- The shift solenoid valve S1 is turned on/off normally when the shift lever is in the D position:

ECM command gearshift	1st	2nd	3rd	4th	5th
Shift solenoid valve S1	ON	ON	OFF	OFF	OFF

1	**Check transmission wire.**

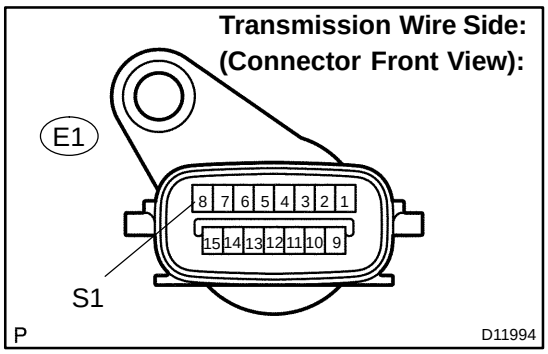

PREPARATION:

Disconnect the transmission wire connector.

CHECK:

Measure the resistance according to the value(s) in the table below.

OK:

Tester Connection	Specified Condition 20°C (68°F)
8 − Body ground	11 to 15 Ω

NG → **Go to step 3.**

OK

2	Check harness and connector (Transmission wire − ECM)

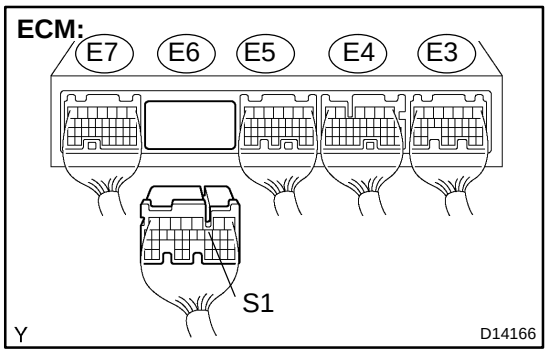

PREPARATION:

(a) Connect the transmission wire connector.

(b) Disconnect the ECM connector.

CHECK:

Measure the resistance according to the value(s) in the table below.

OK:

Tester Connection	Specified Condition 20°C (68°F)
E6 − 11 (S1) − Body ground	11 to 15 Ω

NG → **Repair or replace the harness or connector (See page IN−30).**

OK →

Replace the ECM (See page SF−82).

3	Check shift solenoid valve S1.

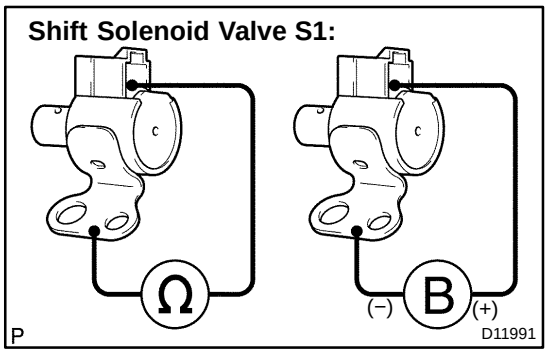

PREPARATION:

Remove the shift solenoid valve S1 (See page AT−12).

CHECK:

Measure the resistance according to the value(s) in the table below.

OK:

Tester Connection	Specified Condition 20°C (68°F)
Solenoid Connector (S1) − Solenoid Body (S1)	11 to 15 Ω

CHECK:

Connect the positive (+) lead to the terminal of the solenoid connector, and the negative (−) lead to the solenoid body.

OK:

The solenoid makes an operating sound.

NG → **Replace the shift solenoid valve S1 (See page AT−12).**

OK

Repair or replace the transmission wire (See page AT−9).

DIDWX−01

DTC	P0976	Shift Solenoid ”B” Control Circuit Low (Shift Solenoid Valve S2)

DTC	P0977	Shift Solenoid ”B” Control Circuit High (Shift Solenoid Valve S2)

CIRCUIT DESCRIPTION

Shifting from 1st to 5th is performed in combination with ”ON” and ”OFF” operation of the shift solenoid valves SL1, SL2, S1, S2 and SR which are controlled by the ECM. If an open or short circuit occurs in either of the shift solenoid valves, the ECM controls the remaining normal shift solenoid valves to allow the vehicle to be operated smoothly (See page DI−1150).

DTC No.	DTC Detection Condition	Trouble Area
P0976	ECM detects short in solenoid valve S2 circuit 2 times when solenoid valve S2 is operated (1−trip detection logic)	• Short in shift solenoid valve S2 circuit • Shift solenoid valve S2 • ECM
P0977	ECM detects open in solenoid valve S2 circuit 2 times when solenoid valve S2 is not operated (1−trip detection logic)	• Open in shift solenoid valve S2 circuit • Shift solenoid valve S2 • ECM

MONITOR DESCRIPTION

These DTCs indicate an open or short in the shift solenoid valve S2 circuit. When there is an open or short circuit in any shift solenoid valve circuit, the ECM detects the problem and illuminates the MIL and stores the DTC. When the shift solenoid valve S2 is on, if resistance is 8 Ω or less, the ECM determines there is a short in the shift solenoid valve S2 circuit.

When the shift solenoid valve S2 is off, if resistance is 100 kΩ or more, the ECM determines there is an open in the shift solenoid valve S2 circuit (See page DI−1150).

MONITOR STRATEGY

Related DTCs	P0976	Shift solenoid valve S2/Range check (Low resistance)
	P0977	Shift solenoid valve S2/Range check (High resistance)
Required sensors/Components	Shift solenoid valve S2	
Frequency of operation	Continuous	
Duration	0.064 sec.	
MIL operation	Immediate	
Sequence of operation	None	

TYPICAL ENABLING CONDITIONS

Item	Specification	
	Minimum	Maximum
The monitor will run whenever these DTCs are not present.	See page DI−1128	
Range check (Low resistance)		
Shift solenoid valve S2	ON	
Range check (High resistance)		
Shift solenoid valve S2	OFF	

TYPICAL MALFUNCTION THRESHOLDS

Detection criteria	Threshold
Range check (Low resistance)	
Shift solenoid valve S2 resistance	8 Ω or less
Range check (High resistance)	
Shift solenoid valve S2 resistance	100 kΩ or more

COMPONENT OPERATING RANGE

Parameter	Standard value
Shift solenoid valve S2	Resistance: 11 to 15 Ω at 20°C (68°F)

WIRING DIAGRAM

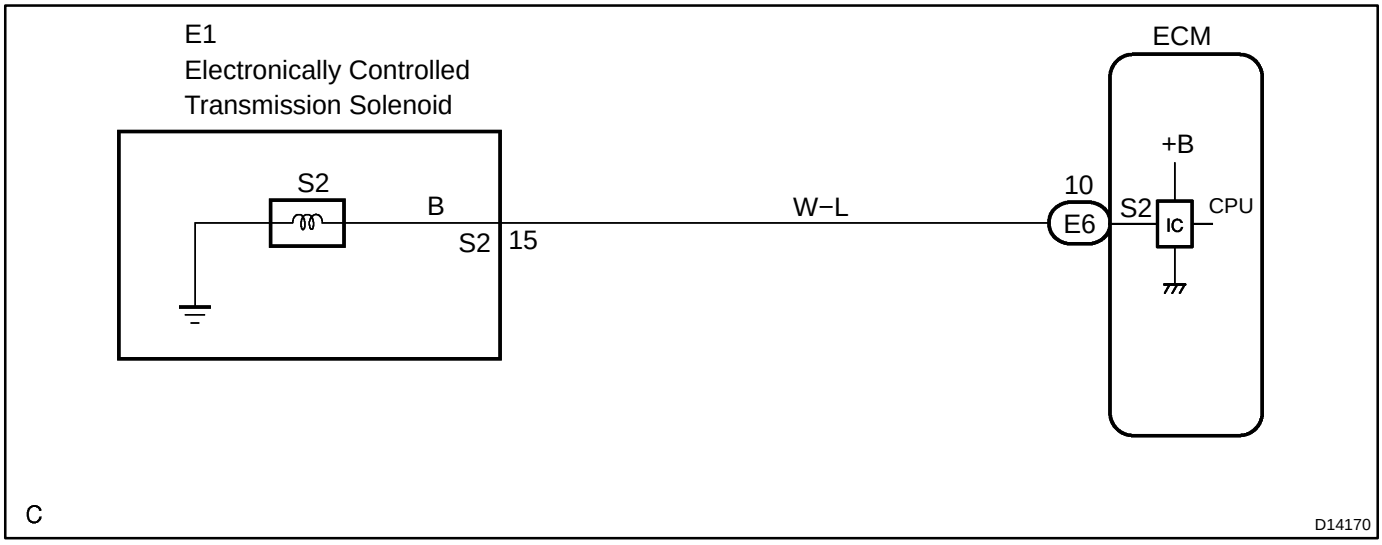

INSPECTION PROCEDURE

HINT:

- The shift solenoid valve S2 is turned on/off normally when the shift lever is in the D position:

ECM command gearshift	1st	2nd	3rd	4th	5th
Shift solenoid valve S2	OFF	ON	ON	OFF	OFF

1	**Check transmission wire.**

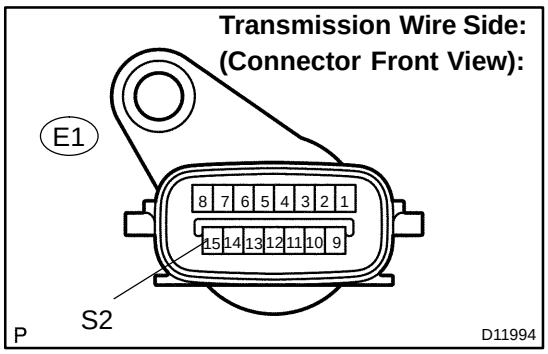

PREPARATION:

Disconnect the transmission wire connector.

CHECK:

Measure the resistance according to the value(s) in the table below.

OK:

Tester Connection	Specified Condition 20°C (68°F)
15 − Body ground	11 to 15 Ω

NG → **Go to step 3.**

OK

2	Check harness and connector (Transmission wire − ECM)

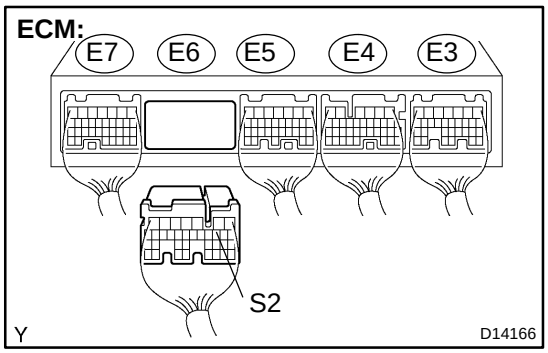

PREPARATION:

(a) Connect the transmission wire connector.

(b) Disconnect the ECM connector.

CHECK:

Measure the resistance according to the value(s) in the table below.

OK:

Tester Connection	Specified Condition 20°C (68°F)
E6 − 10 (S2) − Body ground	11 to 15 Ω

NG → **Repair or replace the harness or connector (See page IN−30).**

OK →

Replace the ECM (See page SF−82).

3	Check shift solenoid valve S2.

Shift Solenoid Valve S2:

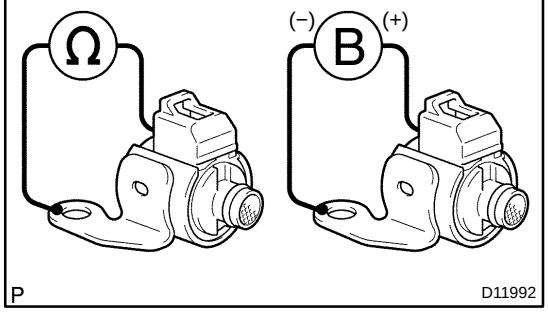

PREPARATION:

Remove the shift solenoid valve S2 (See page AT−12).

CHECK:

Measure the resistance according to the value(s) in the table below.

OK:

Tester Connection	Specified Condition 20°C (68°F)
Solenoid Connector (S2) − Solenoid Body (S2)	11 to 15 Ω

CHECK:

Connect the positive (+) lead to the terminal of the solenoid connector, and the negative (−) lead to the solenoid body.

OK:

The solenoid makes an operating sound.

NG → **Replace the shift solenoid valve S2 (See page AT−12).**

OK

Repair or replace the transmission wire (See page AT−9).

DIDWY−01

DTC	P0985	Shift Solenoid ”E” Control Circuit Low (Shift Solenoid Valve SR)

DTC	P0986	Shift Solenoid ”E” Control Circuit High (Shift Solenoid Valve SR)

CIRCUIT DESCRIPTION

Shifting from 1st to 5th is performed in combination with ”ON” and ”OFF” operation of the shift solenoid valves SL1, SL2, S1, S2 and SR which are controlled by the ECM. If an open or short circuit occurs in either of the shift solenoid valves, the ECM controls the remaining normal shift solenoid valves to allow the vehicle to be operated smoothly (See page DI−1150).

DTC No.	DTC Detection Condition	Trouble Area
P0985	ECM detects short in solenoid valve SR circuit 2 times when solenoid valve SR is operated (1−trip detection logic)	• Short in shift solenoid valve SR circuit • Shift solenoid valve SR • ECM
P0986	ECM detects open in solenoid valve SR circuit 2 times when solenoid valve SR is not operated (1−trip detection logic)	• Open in shift solenoid valve SR circuit • Shift solenoid valve SR • ECM

MONITOR DESCRIPTION

These DTCs indicate an open or short in the shift solenoid valve SR circuit. When there is an open or short circuit in any shift solenoid valve circuit, the ECM detects the problem and illuminates the MIL and stores the DTC. When the shift solenoid valve SR is on, if resistance is 8 Ω or less, the ECM determines there is a short in the shift solenoid valve SR circuit.

When the shift solenoid valve SR is off, if resistance is 100 kΩ or more, the ECM determines there is an open in the shift solenoid valve SR circuit (See page DI−1150).

MONITOR STRATEGY

Related DTCs	P0985	Shift solenoid valve SR/Range check (Low resistance)
	P0986	Shift solenoid valve SR/Range check (High resistance)
Required sensors/Components	Shift solenoid valve SR	
Frequency of operation	Continuous	
Duration	0.064 sec.	
MIL operation	Immediate	
Sequence of operation	None	

TYPICAL ENABLING CONDITIONS

Item	Specification	
	Minimum	Maximum
The monitor will run whenever these DTCs are not present.	See page DI−1128	
Range check (Low resistance)		
Shift solenoid valve SR	ON	
Battery voltage	8 V or more	−
Ignition switch	ON	
Starter	OFF	
Range check (High resistance)		
Shift solenoid valve SR	OFF	
Battery voltage	8 V or more	−
Ignition switch	ON	
Starter	OFF	

TYPICAL MALFUNCTION THRESHOLDS

Detection criteria	Threshold
Range check (Low resistance)	
Shift solenoid valve SR resistance	8 Ω or less
Range check (High resistance)	
Shift solenoid valve SR resistance	100 kΩ or more

COMPONENT OPERATING RANGE

Parameter	Standard value
Shift solenoid valve SR	Resistance: 11 to 15 at 20°C (68°F)

WIRING DIAGRAM

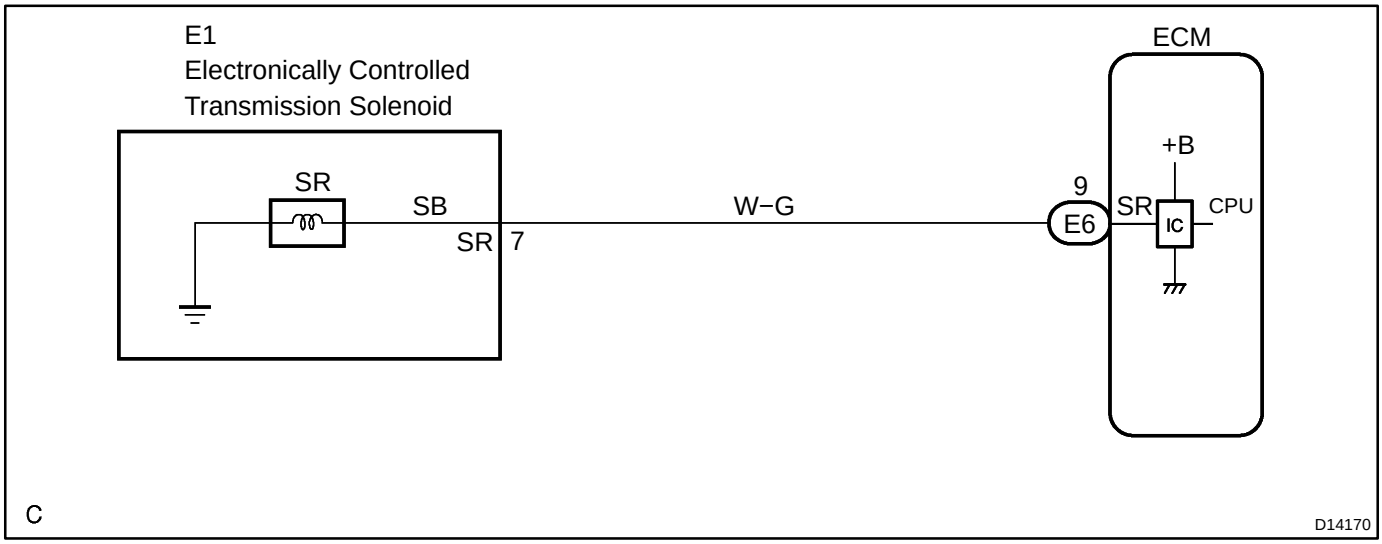

INSPECTION PROCEDURE

HINT:

- The shift solenoid valve SR is turned on/off normally when the shift lever is in the D position:

ECM command gearshift	1st	2nd	3rd	4th	5th
Shift solenoid valve SR	OFF	OFF	OFF	OFF	ON

1	**Check transmission wire.**

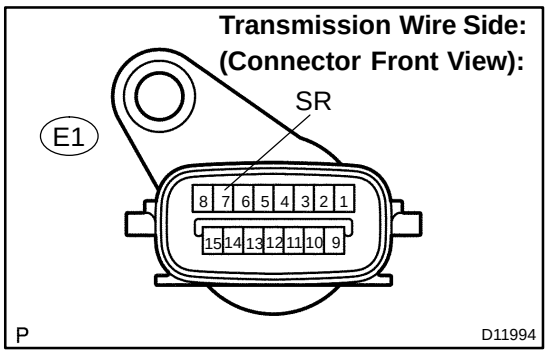

PREPARATION:

Disconnect the transmission wire connector.

CHECK:

Measure the resistance according to the value(s) in the table below.

OK:

Tester Connection	Specified Condition 20°C (68°F)
7 − Body ground	11 to 15 Ω

NG → **Go to step 3.**

OK

2	Check harness and connector (Transmission wire − ECM)

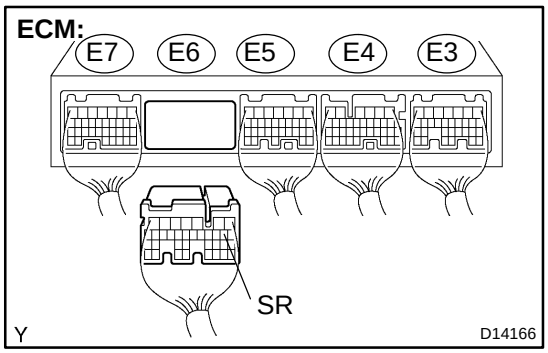

PREPARATION:

(a) Connect the transmission wire connector.

(b) Disconnect the connector of the ECM.

CHECK:

Measure the resistance according to the value(s) in the table below.

OK:

Tester Connection	Specified Condition 20°C (68°F)
E6 − 9 (SR) − Body ground	11 to 15 Ω

NG → **Repair or replace the harness or connector (See page IN−30).**

OK →

Replace the ECM (See page SF−82).

3	Check shift solenoid valve SR.

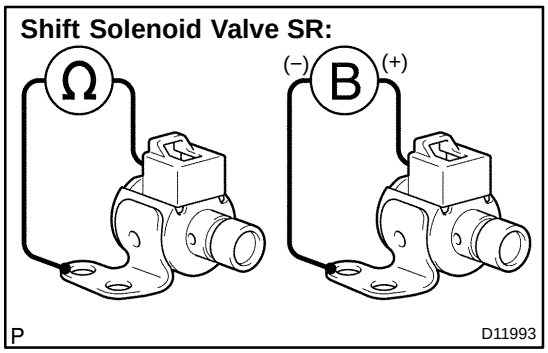

PREPARATION:

Remove the shift solenoid valve SR (See page AT−12).

CHECK:

Measure the resistance according to the value(s) in the table below.

OK:

Tester Connection	Specified Condition 20°C (68°F)
Solenoid Connector (SR) − Solenoid Body (SR)	11 to 15 Ω

CHECK:

Connect the battery positive lead to the solenoid connector terminal and the battery negative lead to the solenoid body ground.

OK:

Solenoid sounds an operation noise.

NG → **Replace the shift solenoid valve SR (See page AT−12).**

OK

Repair or replace the transmission wire (See page AT−9).

DIDX6–01

Shift Position L Switch Circuit

CIRCUIT DESCRIPTION

The shift position L switch is a momentary type switch. When the shift position L switch is pressed while driving with the shift lever in the 2 position, the L position indicator on the combination meter comes on and the transmission is locked in 1st gear. When the switch is pressed again, the indicator goes off and the transmission is released.

WIRING DIAGRAM

Except Double Cab:

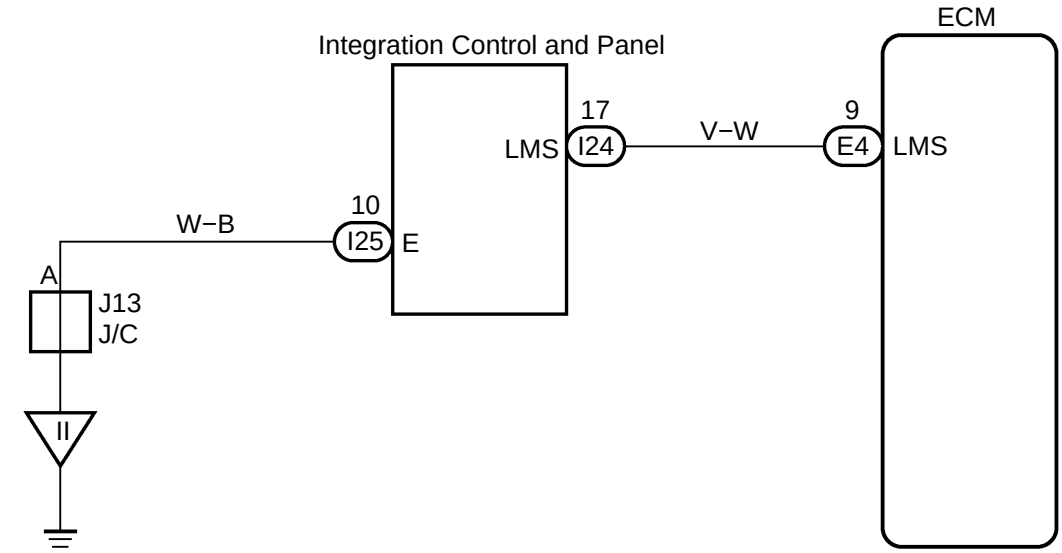

N D14233

Double Cab:

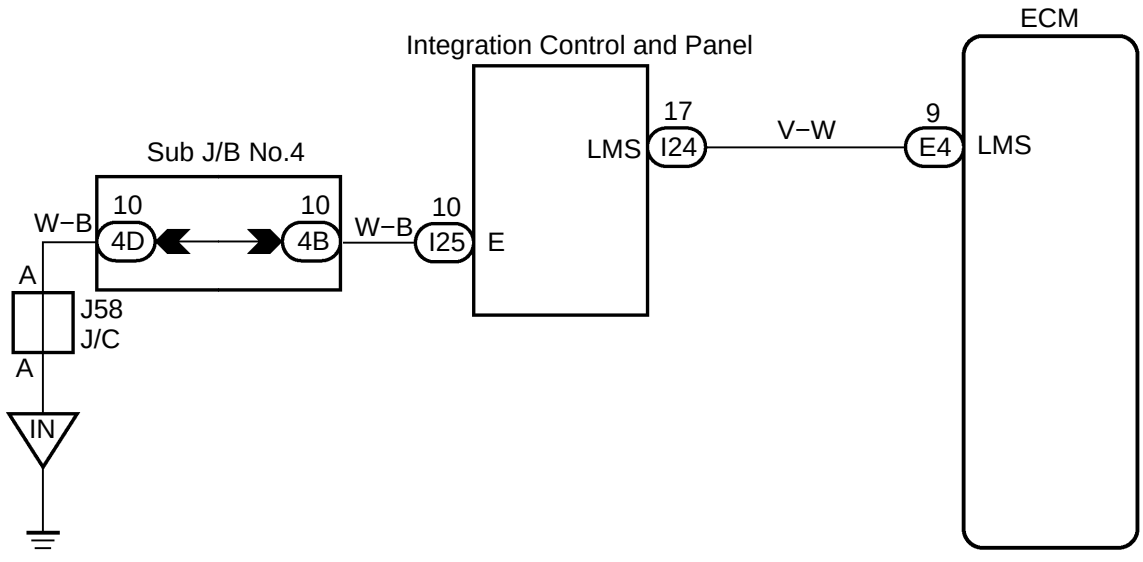

N D14244

INSPECTION PROCEDURE

1	Check harness and connector (shift position L switch − body ground).

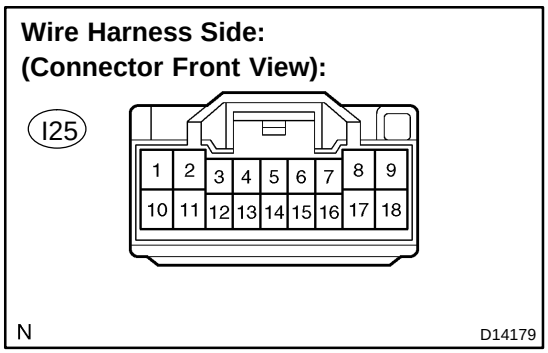

PREPARATION:

Remove the center cluster integration panel assembly (shift position L switch).

CHECK:

Measure the resistance according to the value(s) in the table below.

OK:

Tester Connection	Specified Condition
10 − Body ground	Below 1 Ω

NG → **Repair or replace the harness or connector (See page IN−30).**

OK

2	Inspect center cluster integration panel (shift position L switch).

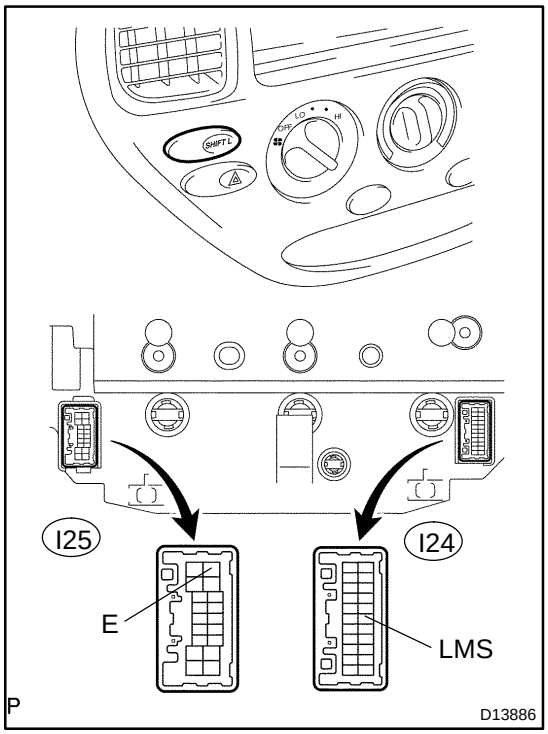

CHECK:

Measure the resistance according to the value(s) in the table below.

OK:

Switch Condition	Tester Connection	Specified Condition
Shift position L switch pressed and held	I24 − 17 (LMS) − I25 − 10 (E)	Below 1 Ω
Shift position L switch released	↑	10 kΩ or higher

NG → **Replace center cluster integration panel (shift position L switch).**

OK

3	Check harness and connector (shift position L switch − ECM).

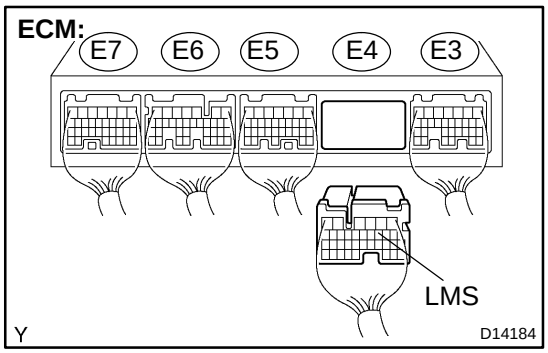

PREPARATION:

(a) Install the center cluster integration panel assembly (shift position L switch).

(b) Disconnect the connector from the ECM.

CHECK:

Measure the resistance according to the value(s) in the table below.

OK:

Switch Condition	Tester Connection	Specified Condition
Shift position L switch pressed and held	E4 − 9 (LMS) − Body ground	Below 1 Ω
Shift position L switch released	↑	10 kΩ or higher

NG → **Repair or replace the harness or connector (See page IN−30).**

OK

Proceed to next circuit inspection shown on matrix chart (See page DI−1136).

DIDWF−01

CHECK MODE PROCEDURE

DESCRIPTION

Check mode has a higher sensitivity to malfunctions and can detect malfunctions that normal mode cannot detect. Check mode can also detect all the malfunctions that normal mode can detect. In check mode, DTCs are detected with 1−trip detection logic.

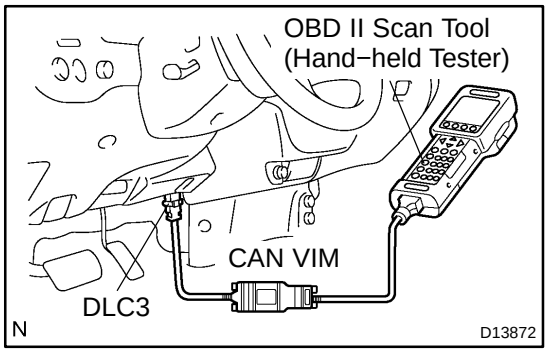

CHECK MODE PROCEDURE

(a) Make sure that the items below are true:
  (1) Battery positive voltage 11 V or more
  (2) Throttle valve fully closed
  (3) Transmission in the P or N position
  (4) A/C switched OFF

(b) Turn the ignition switch OFF.

(c) Connect the hand−held tester together with the Controller Area Network Vehicle Interface Module (CAN VIM) to the DLC3.

(d) Turn the ignition switch ON.

(e) Enter the following menus: DIAGNOSIS / ENHANCED OBD II / CHECK MODE.

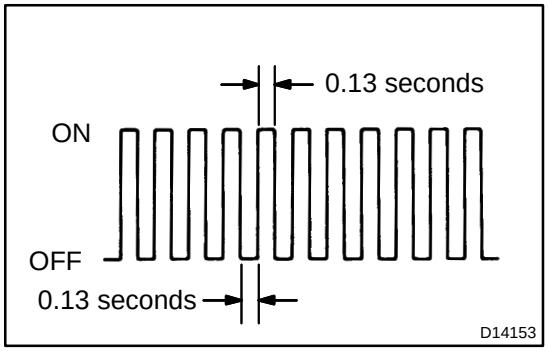

(f) Change the ECM to check mode. Make sure the MIL flashes as shown in the illustration.

NOTICE:

All DTCs and freeze frame data recorded will be erased if: 1) the hand−held tester is used to change the ECM from normal mode to check mode or vice−versa; or 2) during check mode, the ignition switch is turned from ON to ACC or LOCK.

Before check mode, make notes of the DTCs and freeze frame data.

(g) Start the engine. The MIL should turn off after the engine starts.

(h) Perform ”MONITOR DRIVE PATTERN” for the ECT test (See page DI−1134).
(Or, simulate the conditions of the malfunction described by the customer).

(i) After simulating the malfunction conditions, use the hand−held tester diagnosis selector to check the DTC and freeze frame data.

DIDW2−01

CUSTOMER PROBLEM ANALYSIS CHECK

Automatic Transmission System Check Sheet

Inspector's Name :

Customer's Name		VIN	
		Production Date	/ /
		Licence Plate No.	
Date Vehicle Brought In	/ /	Odometer Reading	km mile

Date Problem Occurred	/ /
How Often Does Problem Occur?	☐ Continuous ☐ Intermittent (times a day)

Symptoms	☐ Vehicle does not move (☐ Any position ☐ Particular position)
	☐ No up−shift (☐ 1st → 2nd ☐ 2nd → 3rd ☐ 3rd → 4th ☐ 4th → 5th)
	☐ No down−shift (☐ 5th → 4th ☐ 4th → 3rd ☐ 3rd → 2nd ☐ 2nd → 1st)
	☐ Lock−up malfunction
	☐ Shift point too high or too low
	☐ Harsh engagement (☐ N → D ☐ Lock−up ☐ Any drive position)
	☐ Slip or shudder
	☐ No kick−down
	☐ Others ( )

Check Item	Malfunction Indicator Lamp	☐ Normal ☐ Remains ON

DTC Check	1st Time	☐ Normal system code ☐ Trouble code (DTC)
	2nd Time	☐ Normal system code ☐ Trouble code (DTC)

DIDWE−01

DTC CHECK / CLEAR

1. CHECK DTC

DTCs which are stored in the ECM can be displayed with the hand−held tester or generic OBD II scan tool.

These scan tools can display pending DTCs and current DTCs. Some DTC aren't stored if the ECM doesn't detect a malfunction during consecutive driving. However, the detected malfunction during once driving is stored as pending DTC.

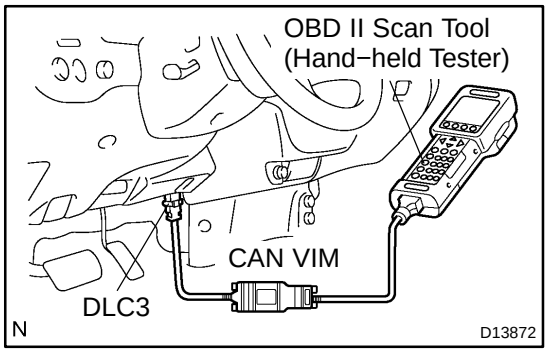

(a) Connect the hand−held tester to the Controller Area Network Vehicle Interface Module (CAN VIM). Then connect the CAN VIM to the Data Link Connector 3 (DLC3).

(b) Turn the ignition switch ON.

(c) Enter the following menus: DIAGNOSIS / ENHANCED OBD II / DTC INFO / CURRENT CODES (or PENDING CODE).

(d) Confirm the DTCs and freeze frame data and then write them down.

(e) See page DI−1156 to confirm the details of the DTCs.

NOTICE:

When simulating a symptom with the scan tool to check for DTCs, use normal mode. For codes on DIAGNOSTIC TROUBLE CODE CHART subject to "2−trip detection logic", perform the following actions.

Turn the ignition switch OFF after the symptom is simulated once. Then repeat the simulation process again. When the problem has been simulated twice, the MIL illuminates and the DTCs are recorded in the ECM.

2. CLEAR DTC

(a) Connect the hand−held tester to the CAN VIM. Then connect the CAN VIM to the DLC3.

(b) Turn the ignition switch ON.

(c) Enter the following menus: DIAGNOSIS / ENHANCED OBD II / DTC INFO / CLEAR CODES and press YES.

DIDWD−01

DIAGNOSIS SYSTEM

DESCRIPTION

When troubleshooting On−Board Diagnostic (OBD II) vehicles, the vehicle must be connected to the OBD II scan tool (complying with SAE J1987). Various data output from the vehicle's ECM can then be read.

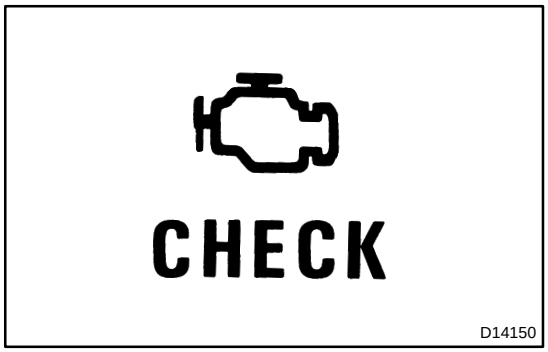

OBD II regulations require that the vehicle's on−board computer illuminates the Malfunction Indicator Lamp (MIL) on the instrument panel when the computer detects a malfunction in:
1) The emission control system/components
2) The powertrain control components (which affect vehicle emissions)
3) The computer
In addition, the applicable Diagnostic Trouble Codes (DTCs) prescribed by SAE J2012 are recorded in the ECM memory.
If the malfunction does not reoccur in 3 consecutive trips, the MIL turns off automatically but the DTCs remain recorded in the ECM memory.

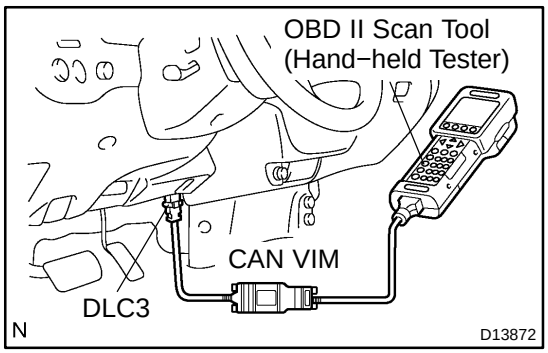

To check DTCs, connect the scan tool to the Data Link Connector 3 (DLC3) of the vehicle. The scan tool displays DTCs, the freeze frame data and a variety of the engine data.
The DTCs and freeze frame data can be erased with the scan tool (See page DI−1148).

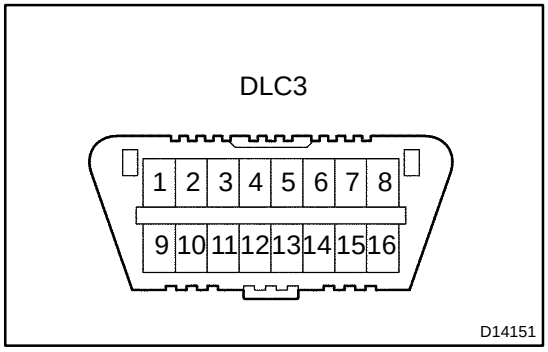

NORMAL MODE AND CHECK MODE

The diagnosis system operates in "normal mode" during normal vehicle use. In normal mode, "2−trip detection logic" is used to ensure accurate detection of malfunctions. "Check mode" is also available to technicians as an option. In check mode, "1−trip detection logic" is used for simulating malfunction symptoms and increasing the system's ability to detect malfunctions, including intermittent malfunctions.

2−TRIP DETECTION LOGIC

When a malfunction is first detected, the malfunction is temporarily stored in the ECM memory (1st trip). If the ignition switch is turned OFF and then ON again, and the same malfunction is detected again, the MIL will illuminate.

FREEZE FRAME DATA

Freeze frame data records the engine conditions (fuel system, calculated load, engine coolant temperature, fuel trim, engine speed, vehicle speed, etc.) when a malfunction is detected. When troubleshooting, freeze frame data can help determine if the vehicle was running or stopped, if the engine was warmed up or not, if the air/fuel ratio was Lean or Rich, and other data from the time the malfunction occurred.

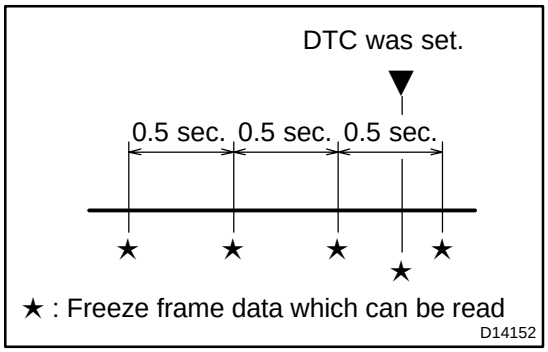

The hand−held tester records freeze frame data in five different instances: 1) 3 times before the DTC is set, 2) once when the DTC is set, and 3) once after the DTC is set. These data can be used to simulate the vehicle's condition around the time when the malfunction occurred. The data may help find the cause of the malfunction, or judge if the DTC is being caused by a temporary malfunction or not.

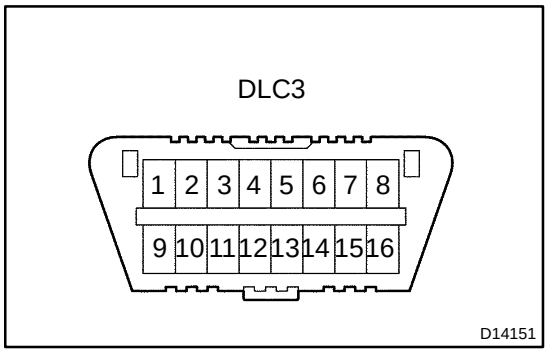

DLC3 (Data Link Connector 3)

The vehicle's ECM uses the ISO 15765−4 for communication protocol. The terminal arrangement of the DLC3 complies with SAE J1962 and matches the ISO 15765−4 format.

HINT:

Connect the cable of the hand−held tester to the DLC3, turn the ignition switch ON and attempt to use the hand−held tester. If the screen displays UNABLE TO CONNECT TO VEHICLE, a problem exists in the vehicle side or the tester side.

If the communication is normal when the tool is connected to another vehicle, inspect the DLC3 on the original vehicle.

If the communication is still impossible when the tool is connected to another vehicle, the problem is probably in the tool itself. Consult the Service Department listed in the tool's instruction manual.

Symbol	Terminal No.	Name	Reference terminal	Result	Condition
SIL	7	Bus "+" line	5 − Signal ground	Pulse generation	During transmission
CG	4	Chassis ground	Body ground	Below 1 Ω	Always
SG	5	Signal ground	Body ground	Below 1 Ω	Always
BAT	16	Battery positive	Body ground	11 to 14 V	Always
CANH	6	HIGH−level CAN bus line	CANL	54 to 69 Ω	IG switch OFF
CANH	6	HIGH−level CAN bus line	Battery positive	1 MΩ or higher	IG switch OFF
CANH	6	HIGH−level CAN bus line	CG	1 kΩ or higher	IG switch OFF
CANL	14	LOW−level CAN bus line	Battery positive	1 MΩ or higher	IG switch OFF
CANL	14	LOW−level CAN bus line	CG	1 kΩ or higher	IG switch OFF

CHECK BATTERY VOLTAGE

Battery voltage: 11 to 14 V

If voltage is below 11 V, replace the battery before proceeding.

CHECK MIL

(a) Check that the MIL illuminates when turning the ignition switch ON.

If the MIL does not illuminate, there is a problem in the MIL circuit (refer to MIL CIRCUIT on page DI−940)

(b) When the engine is started, the MIL should turn off.

ALL READINESS

For this vehicle, using the hand−held tester allows readiness codes corresponding to all DTCs to be read. When diagnosis (normal or malfunctioning) has been complete, readiness codes are set. Enter the following menus: ENHANCED OBD II / MONITOR STATUS on the hand−held tester.

DIDWH−01

DATA LIST / ACTIVE TEST

1. DATA LIST

HINT:

According to the DATA LIST displayed by the OBD II scan tool or hand−held tester, you can read the value of the switch, sensor, actuator and so on without parts removal. Reading the DATA LIST as the first step of troubleshooting is one method to shorten labor time.

(a) Warm up the engine.
(b) Turn the ignition switch off.
(c) Connect the OBD II scan tool or hand−held tester to the DLC3.
(d) Turn the ignition switch to the ON position.
(e) Push the ”ON” button of the OBD II scan tool or the hand−held tester.
(f) When you use the hand−held tester:
Select the item ”DIAGNOSIS / ENHANCED OBD II / DATA LIST”.
(g) According to the display on the tester, read the ”DATA LIST”.

Item	Measurement Item/ Range (display)	Normal Condition	Diagnostic Note
STOP LIGHT SW	Stop light SW Status/ ON or OFF	• Brake Pedal is depressed: ON • Brake Pedal is released: OFF	−
PNP SW [NSW]	PNP SW Status/ ON or OFF	Shift lever position is; P and N: ON Except P and N: OFF	When the shift lever position displayed on the hand−held tester differs from the actual position, adjustment of the PNP switch or the shift cable may be incorrect. HINT: When the failure still occurs even after adjusting these parts, See page DI−1159.
LOW	PNP SW Status/ ON or OFF	• Shift lever position is 2: OFF ↓ • Shift position L switch Push: ON ↓ • Shift position L switch Push: OFF	↑
2ND	PNP SW Status/ ON or OFF	Shift lever position is; 2 and L: ON Except 2 and L: OFF	↑
3RD	PNP SW Status/ ON or OFF	Shift lever position is; 3: ON Except 3: OFF	↑
DRIVE	PNP SW Status/ ON or OFF	Shift lever position is; D: ON Except D: OFF	↑
REVERSE	PNP SW Status/ ON or OFF	Shift lever position is; R: ON Except R: OFF	↑
OVERDRV CUT SW2	O/D SW Status/ ON or OFF	• IG SW ON: ON ↓ • O/D SW Push: OFF ↓ • O/D SW Push: ON	−
SHIFT	Actual Gear Position/ 1st, 2nd, 3rd, 4th or 5th	Shift lever position is; • L: 1st • 2: 1st or 2nd • 3: 1st, 2nd or 3rd • 4(O/D OFF): 1st, 2nd, 3rd or 4th • D: 1st, 2nd, 3rd, 4th or 5th	−

LOCK UP SOL	Lock Up Solenoid Status/ ON or OFF	• Lock Up: ON • Except Lock Up: OFF	−
SOLENOID (SLT)	Shift Solenoid SLT Status/ ON or OFF	• Accelerator pedal is depressed: OFF • Accelerator pedal is released: ON	−
SOLENOID (SLU)	Shift Solenoid SLU Status/ ON or OFF	• Lock Up: ON • Except Lock Up: OFF	−
AT FLUID TEMP 1	ATF Temp. Sensor No.1 Value/ min.: −40°C (−40°F) max.: 215°C (419°F)	• After Stall Test; Approx. 80°C (176°F) • Equal to ambient temperature when cold soak	If the value is ”−40°C (−40°F)” or ”215°C (419°F)”, ATF temp. sensor No.1 circuit is open or shorted.
AT FLUID TEMP 2	ATF Temp. Sensor No.2 Value/ min.: −40°C (−40°F) max.: 215°C (419°F)	• After Stall Test; Approx. 80°C (176°F) • Equal to ambient temperature when cold soak	If the value is ”−40°C (−40°F)” or ”215°C (419°F)”, ATF temp. sensor No.2 circuit is open or shorted.
SPD (SP2)	Output shaft Speed/ min.: 0 km/h (0 mph) max.: 255 km/h (158 mph)	Vehicle stopped: 0 km/h (0 mph) [HINT] Equal to vehicle speed	−
SPD (NT)	Input Turbine Speed/ display: 50 r/min	[HINT] • Lock−up ON (After warming up the engine); Input Turbine speed (NT) equal to the engine speed. • Lock−up OFF (Idling at N position); Input Turbine speed (NT) nearly equal to the engine speed.	−

2. ACTIVE TEST

HINT:

Performing the ACTIVE TEST using the hand−held tester allows the relay, VSV, actuator and so on to operate without parts removal. Performing the ACTIVE TEST as the first step of troubleshooting is one method to shorten labor time.

It is possible to display the DATA LIST during the ACTIVE TEST.

(a) Warm up the engine.
(b) Turn the ignition switch off.
(c) Connect the hand−held tester to the DLC3.
(d) Turn the ignition switch to the ON position.
(e) Turn on the tester.
(f) Select the item ”DIAGNOSIS / ENHANCED OBD II / ACTIVE TEST”.
(g) According to the display on the tester, perform the ”ACTIVE TEST”.

Item	Test Details	Diagnostic Note
SHIFT	[Test Details] Operate the shift solenoid valve and set each shift position by yourself. [Vehicle Condition] Less than 50 km/h (31 mph) [Others] • Press ”→” button: Shift up • Press ”←” button: Shift down	Possible to check the operation of the shift solenoid valves.
LOCK UP	[Test Details] Control the shift solenoid SLU to set the automatic transmission to the lock−up condition. [Vehicle Condition] • Throttle valve opening angle: Less than 35 % • Vehicle Speed: 60 km/h (37 mph) or more	Possible to check the SLU operation.
LINE PRESS UP *	[Test Details] Operate the shift solenoid SLT and raise the line pressure. [Vehicle Condition] • Vehicle Stopped. • IDL: ON [HINT] OFF: Line pressure up (When the active test of ”Control the Line Pressure Up” is performed, the ECM commands the SLT solenoid to turn off). ON: No action (normal operation)	−

*: ”LINE PRESS UP” in the ACTIVE TEST is performed to check the line pressure changes by connecting the SST to the automatic transaxle, which is used in the HYDRAULIC TEST (See page DI−1123) as well.

HINT:

The pressure values in ACTIVE TEST and HYDRAULIC TEST are different from each other.

DIDVW−01

DEFINITION OF TERMS

Term	Definition
Monitor description	Description of what the ECM monitors and how it detects malfunctions (monitoring purpose and its details).
Related DTCs	A group of diagnostic trouble codes that are output by the ECM based on the same malfunction detection logic.
Typical enabling condition	Preconditions that allow the ECM to detect malfunctions. With all preconditions satisfied, the ECM sets the DTC when the monitored value(s) exceeds the malfunction threshold(s).
Sequence of operation	The priority order that is applied to monitoring, if multiple sensors and components are used to detect the malfunction. While another sensor is being monitored, the next sensor or component will not be monitored until the previous monitoring has concluded.
Required sensor/components	The sensors and components that are used by the ECM to detect malfunctions.
Frequency of operation	The number of times that the ECM checks for malfunctions per driving cycle. ”Once per driving cycle” means that the ECM detects malfunction only one time during a single driving cycle. ”Continuous” means that the ECM detects malfunction every time when enabling condition is met.
Duration	The minimum time that the ECM must sense a continuous deviation in the monitored value(s) before setting a DTC. This timing begins after the ”typical enabling conditions” are met.
Malfunction thresholds	Beyond this value, the ECM will conclude that there is a malfunction and set a DTC.
MIL operation	MIL illumination timing after a defect is detected. ”Immediately” means that the ECM illuminates MIL the instant the ECM determines that there is a malfunction. ”2 driving cycle” means that the ECM illuminates MIL if the same malfunction is detected again in the 2nd driving cycle.
Component operating range	Normal operation range of sensors and solenoids under normal driving conditions. Use these ranges as a reference. They cannot be used to judge if a sensor or solenoid is defective or not.

DIDWI−01

DIAGNOSTIC TROUBLE CODE CHART

If a DTC is displayed during the DTC check, check the parts listed in the table below and proceed to the page given.

HINT:

- *1 : ● ... The MIL (Malfunction Indicator Lamp) lights up
- *2 : ○ ... The ECM memorizes the trouble code if the ECM detects the DTC detection condition.
- This DTC may be output when the clutch, brake and gear components etc. inside the automatic transmission are damaged.

DTC No. (See Page)	Detection Item	Trouble Area	MIL *1	Memory *2
P0500 (DI−701)	Vehicle Speed Sensor ”A”	• Open or short in speed sensor (SP2) circuit • Speed sensor (SP2) • ECM	●	○
P0705 (DI−1159)	Transmission Range Sensor Circuit Malfunction (PRNDL Input)	• Open or short in park/neutral position switch circuit • Park/neutral position switch • ECM	●	○
P0710 (DI−1166)	Transmission Fluid Temperature Sensor ”A” Circuit	• Open or short in ATF temperature sensor No.1 circuit • Transmission wire (ATF temperature sensor No.1) • ECM	●	○
P0711 (DI−1172)	Transmission Fluid Temperature Sensor ”A” Performance	• Transmission wire (ATF temperature sensor No.1)	●	○
P0712 (DI−1166)	Transmission Fluid Temperature Sensor ”A” Circuit Low Input	• Short in ATF temperature sensor No.1 circuit • Transmission wire (ATF temperature sensor No.1) • ECM	●	○
P0713 (DI−1166)	Transmission Fluid Temperature Sensor ”A” Circuit High Input	• Open in ATF temperature sensor No.1 circuit • Transmission wire (ATF temperature sensor No.1) • ECM	●	○
P0717 (DI−1175)	Input Speed Sensor Circuit No Signal	• Open or short in speed sensor (NT) circuit • Speed sensor (NT) • ECM • Automatic transmission (clutch, brake or gear, etc.)	●	○
P0722 (DI−1180)	Output Speed Sensor Circuit No Signal	• Open or short in speed sensor (SP2) circuit • Speed sensor (SP2) • ECM • Automatic transmission (clutch, brake or gear, etc.)	●	○
P0724 (DI−1184)	Brake Switch ”B” Circuit High	• Short in stop light switch signal circuit • Stop light switch • ECM	●	○
P0748 (DI−1188)	Pressure Control Solenoid ”A” Electrical (Shift Solenoid Valve SL1)	• Open or short in shift solenoid valve SL1 circuit • Shift solenoid valve SL1 • ECM	●	○
P0751 (DI−1193)	Shift Solenoid ”A” Performance (Shift Solenoid Valve S1)	• Shift solenoid valve S1 remains open or closed • Valve body is blocked • Automatic transmission (clutch, brake or gear, etc.)	●	○
P0756 (DI−1199)	Shift Solenoid ”B” Performance (Shift Solenoid Valve S2)	• Shift solenoid valve S2 remains open or closed • Valve body is blocked • Automatic transmission (clutch, brake or gear, etc.)	●	○
P0771 (DI−1205)	Shift Solenoid ”E” Performance (Shift Solenoid Valve SR)	• Shift solenoid valve SR remains open or closed • Shift solenoid valve SL1 remains open or closed • Valve body is blocked • Automatic transmission (clutch, brake or gear, etc.)	●	○

P0776 (DI−1210)	Pressure Control Solenoid ”B” Performance (Shift Solenoid Valve SL2)	• Shift solenoid valve SL2 remains open or closed • Valve body is blocked • Automatic transmission (clutch, brake or gear, etc.)	●	○
P0778 (DI−1216)	Pressure Control Solenoid ”B” Electrical (Shift Solenoid Valve SL2)	• Open or short in shift solenoid valve SL2 circuit • Shift solenoid valve SL2 • ECM	●	○
P0781 (DI−1221)	1−2 Shift (1 −2 Shift Valve)	• Valve body is blocked up or stuck (1−2 shift valve) • Automatic transmission (clutch, brake or gear, etc.)	●	○
P0973 (DI−1226)	Shift Solenoid ”A” Control Circuit Low (Shift Solenoid Valve S1)	• Short in shift solenoid valve S1 circuit • Shift solenoid valve S1 • ECM	●	○
P0974 (DI−1226)	Shift Solenoid ”A” Control Circuit High (Shift Solenoid Valve S1)	• Open in shift solenoid valve S1 circuit • Shift solenoid valve S1 • ECM	●	○
P0976 (DI−1231)	Shift Solenoid ”B” Control Circuit Low (Shift Solenoid Valve S2)	• Short in shift solenoid valve S2 circuit • Shift solenoid valve S2 • ECM	●	○
P0977 (DI−1231)	Shift Solenoid ”B” Control Circuit High (Shift Solenoid Valve S2)	• Open in shift solenoid valve S2 circuit • Shift solenoid valve S2 • ECM	●	○
P0985 (DI−1236)	Shift Solenoid ”E” Control Circuit Low (Shift Solenoid Valve SR)	• Short in shift solenoid valve SR circuit • Shift solenoid valve SR • ECM	●	○
P0986 (DI−1236)	Shift Solenoid ”E” Control Circuit High (Shift Solenoid Valve SR)	• Open in shift solenoid valve SR circuit • Shift solenoid valve SR • ECM	●	○
P2714 (DI−1241)	Pressure Control Solenoid ”D” Performance (Shift Solenoid Valve SLT)	• Shift solenoid valve SLT remains open or closed • Valve body is blocked • Automatic transmission (clutch, brake or gear, etc.)	●	○
P2716 (DI−1247)	Pressure Control Solenoid ”D” Electrical (Shift Solenoid Valve SLT)	• Open or short in shift solenoid valve SLT circuit • Shift solenoid valve SLT • ECM	●	○
P2740 (DI−1251)	Transmission Fluid Temperature Sensor ”B” Circuit	• Open or short in ATF temperature sensor No.2 circuit • Transmission wire (ATF temperature sensor No.2) • ECM	●	○
P2742 (DI−1251)	Transmission Fluid Temperature Sensor ”B” Circuit Low Input	• Short in ATF temperature sensor No.2 circuit • Transmission wire (ATF temperature sensor No.2) • ECM	●	○
P2743 (DI−1251)	Transmission Fluid Temperature Sensor ”B” Circuit High Input	• Open in ATF temperature sensor No.2 circuit • Transmission wire (ATF temperature sensor No.2) • ECM	●	○
P2757 (DI−1257)	Torque Converter Clutch Pressure Control Solenoid Performance (Shift Solenoid Valve SLU)	• Shift solenoid valve SLU remains open or closed • Valve body is blocked • Torque converter clutch • Automatic transmission (clutch, brake or gear, etc.) • Line pressure is too low	●	○
P2759 (DI−1265)	Torque Converter Clutch Pressure Control Solenoid Control Circuit Electrical (Shift Solenoid Valve SLU)	• Open or short in shift solenoid valve SLU circuit • Shift solenoid valve SLU • ECM	●	○

P2772* (DI−1270)	Transfer L4 SW Circuit	• Short in transfer L4 position switch circuit • Transfer L4 position switch • ECM	●	○

HINT:
*: 4WD

DIDWG−01

FAIL−SAFE CHART

1. FAIL−SAFE

This function minimizes the loss of the ECT functions when any malfunction occurs in a sensor or solenoid.

Malfunction Part	Function
Output Speed Sensor (SP2)	During an output speed sensor malfunction, shift control is effected through the input speed sensor signal (NT).
ATF Temp. Sensor No. 1	During an ATF temperature sensor No. 1 malfunction, up−shift to the 5th and flex lock−up clutch control are prohibited.
Shift Solenoid Valve S1, S2 and SR	The current to the failed solenoid valve is cut off and control is effected by operating the other solenoid valves with normal operation. Shift control is effected depending on the failed solenoid as described in the table on the next page.
Shift Solenoid Valve SL1 and SL2	During a solenoid valve SL1 or SL2 malfunction, up−shift to the 5th is prohibited.
Shift Solenoid Valve SLU	During a solenoid valve SLU malfunction, the current to the solenoid valve is stopped. This stops lock−up control and flex lock−up control, fuel economy decreases.
Shift Solenoid Valve SLT	During a solenoid valve SLT malfunction, the current to the solenoid valve is stopped. This stops line pressure optimal control, the shift shock increases. However, shifting is effected through normal clutch pressure control.

Fail Safe Function:

If either of the shift solenoid valve circuits has an open or short failure, the ECM turns the other shift solenoid ”ON” and ”OFF” in order to shift into the gear positions shown in the table below.

In case of a short circuit, the ECM stops sending current to the short circuited solenoid.

Even if starting the engine again in the fail−safe mode, the gear position remains in the same position.

○: ON
X: OFF
→: Condition in the electrical malfunction is shown on the left of "→".
Condition in the fail−safe mode is shown on the right of "→".
E/B: Engine brake.

Position	NORMAL						S1 OFF						S2 OFF						SR OFF					
	Gear	S1	S2	SR	SL1	SL2	Gear	S1	S2	SR	SL1	SL2	Gear	S1	S2	SR	SL1	SL2	Gear	S1	S2	SR	SL1	SL2
"R"	R	○	X	X	X	○	R	X	X	X	X	○	R	○	X	X	X	○	R	○	X	X	X	○
"D"	1 st	○	X	X	X	○	4 th → 3 rd	X	X → ○	X	X	○	1 st	○	X	X	X	○	1 st	○	X	X	X	○
	2 nd	○	○	X	X	○	3 rd	X	○	X	X	○	1 st → 4 th	○ → X	X	X	X	○	2 nd	○	○	X	X	○
	3 rd	X	○	X	X	○	3 rd	X	○	X	X	○	4 th	X	X	X	X	○	3 rd	X	○	X	X	○
	4 th	X	X	X	X	○	4 th	X	X	X	X	○	4 th	X	X	X	X	○	4 th	X	X	X	X	○
	5 th	X	X	○	○	X	5 th	X	X	○	○	X	5 th	X	X	○	○	X	4 th	X	X	X	○	X
"3"	1 st	○	X	X	X	○	3 rd → 3 rd E/B	X	X → ○	X	X	○ → X	1 st	○	X	X	X	○	1 st	○	X	X	X	○
	2 nd	○	○	X	X	○	3 rd → 3 rd E/B	X	○	X	X	○ → X	1 st → 3 rd E/B	○ → X	X	X	X	○ → X	2 nd	○	○	X	X	○
	3 rd E/B	X	○	X	X	X	3 rd E/B	X	○	X	X	X	3 rd E/B	X	X	X	X	X	3 rd E/B → 3 rd	X	○	X	X	X → ○
	4 th	X	X	○	X	○	4 th	X	X	○	X	○	4 th	X	X	○	X	○	3 rd	X	X → ○	X	X	○ → ○
	5 th	X	X	○	○	X	5 th	X	X	○	○	X	5 th	X	X	○	○	X	3 rd E/B → 3 rd	X	X → ○	X	○ → X	X → ○
"2"	1 st	○	X	X	X	○	1 st	X	X	X	X	○	1 st	○	X	X	X	○	1 st	○	X	X	X	○
	2 nd E/B	○	○	○	X	X	3 rd E/B	X	○	○	X	X	2 nd E/B → 4 th	○ → X	X	○	X	X → ○	2 nd	○	○	X	X	X
	3 rd E/B	X	○	○	X	X	3 rd E/B	X	○	○	X	X	Fail 4th	X	X	○	X	X → ○	2 nd	X → ○	○	X	X	X
	4 th	X	X	○	X	○	4 th	X	X	○	X	○	4 th	X	X	○	X	○	1 st → 2 nd	X → ○	X → ○	X	X	○ → X
	5 th	X	X	○	○	X	5 th	X	X	○	○	X	5 th	X	X	○	○	X	1 st E/B → 2 nd	X → ○	○	X	○ → X	X
"L"	1 st E/B	○	X	X	X	X	1 st E/B	X	X	X	X	X	1 st E/B	○	X	X	X	X	1 st E/B	○	X	X	X	X
	2 nd E/B	○	○	○	X	X	3 rd E/B	X	○	○	X	X	2 nd E/B → 4 th	○ → X	X	○	X	X → ○	2 nd	○	○	X	X	X
	3 rd E/B	X	○	○	X	X	3 rd E/B	X	○	○	X	X	Fail 4 th	X	X	○	X	X → ○	2 nd	X → ○	○	X	X	X
	4 th	X	X	○	X	○	4 th	X	X	○	X	○	4 th	X	X	○	X	○	1 st → 2 nd	X → ○	X → ○	X	X	○ → X
	5 th	X	X	○	○	X	5 th	X	X	○	○	X	5 th	X	X	○	○	X	1 st E/B → 2 nd	X → ○	X → ○	X	○ → X	X

○: ON
X: OFF
→: Condition in the electrical malfunction is shown on the left of "→".
Condition in the fail−safe mode is shown on the right of "→".
E/B: Engine brake.

Position	S1 S2 OFF						S2 SR OFF						S1 SR OFF						S1 S2 SR OFF					
	Gear	S1	S2	SR	SL1	SL2	Gear	S1	S2	SR	SL1	SL2	Gear	S1	S2	SR	SL1	SL2	Gear	S1	S2	SR	SL1	SL2
"R"	R	X	X	X	X	○	R	○	X	X	X	○	R	X	X	X	X	○	R	X	X	X	X	○
"D"	4 th	X	X	X	X	○	1 st	○	X	X	X	○	4 th → 3 rd	X	X→○	X	X	○	4 th	X	X	X	X	○
	4 th	X	X	X	X	○	1 st → 4 th	○→X	X	X	X	○	3 rd	X	○	X	X	○	4 th	X	X	X	X	○
	4 th	X	X	X	X	○	4 th	X	X	X	X	○	3 rd	X	○	X	X	○	4 th	X	X	X	X	○
	4 th	X	X	X	X	○	4 th	X	X	X	X	○	4 th	X	X	X	X	○	4 th	X	X	X	X	○
	5 th	X	X	○	○	X	4 th	X	X	X	○→X	X→○	4 th	X	X	X	○→X	X→○	4 th	X	X	X	○→X	X→○
"3"	3 rd → 3 rd E/B	X	X	X	X	○→X	1 st	○	X	X	X	○	3 rd	X	X→○	X	X	○→○	3 rd	X	X	X	X	○→○
	3 rd → 3 rd E/B	X	X	X	X	○→X	1 st → 3 rd	○→X	X	X	X	○→○	3 rd	X	○	X	X	○→○	3 rd	X	X	X	X	○→○
	3 rd E/B	X	X	X	X	X	3 rd E/B → 3 rd	X	X	X	X	X→○	3 rd E/B → 3 rd	X	○	X	X	X→○	3 rd E/B → 3 rd	X	X	X	X	X→○
	4 th	X	X	○	X	○	3 rd	X	X	X	X	○→○	3 rd	X	X→○	X	X	○→○	3 rd	X	X	X	X	○→○
	5 th	X	X	○	○	X	1 st E/B → 3 rd	X	X	X	○→X	X→○	3 rd E/B → 3 rd	X	X→○	X	○→X	X→○	3 rd E/B → 3 rd	X	X	X	○→X	X→○
"2"	1 st	X	X	X	X	○	1 st	○	X	X	X	○	1 st	X	X	X	X	○	1 st	X	X	X	X	○
	Fail 4 th	X	X	○	X	X→○	1 st E/B → 1 st	○	X	X	X	X→○	2 nd	X	○	X	X	X	1 st E/B → 1 st	X	X	X	X	X→○
	Fail 4 th	X	X	○	X	X→○	1 st E/B → 1 st	X→○	X	X	X	X→○	2 nd	X	○	X	X	X	1 st E/B → 1 st	X	X	X	X	X→○
	4 th	X	X	○	X	○	1 st	X→○	X	X	X	○	1 st → 2nd	X	X→○	X	X	○→X	1 st	X	X	X	X	○
	5 th	X	X	○	○	X	1 st E/B → 1 st	X→○	X	X	○→X	X→○	1 st E/B → 2nd	X	X→○	X	○→X	X	1 st E/B → 1 st	X	X	X	○→X	X→○
"L"	1 st E/B	X	X	X	X	X	1 st E/B	○	X	X	X	X	1 st E/B	X	X	X	X	X	1 st E/B	X	X	X	X	X
	Fail 4 th	X	X	○	X	X→○	1 st E/B → 1 st	○	X	X	X	X→○	2 nd	X	○	X	X	X	1 st E/B → 1 st	X	X	X	X	X→○
	Fail 4 th	X	X	○	X	X→○	1 st E/B → 1 st	X→○	X	X	X	X→○	2 nd	X	○	X	X	X	1 st E/B → 1 st	X	X	X	X	X→○
	4 th	X	X	○	X	○	1 st	X→○	X	X	X	○	1 st → 2nd	X	X→○	X	X	○→X	1 st	X	X	X	X	○
	5 th	X	X	○	○	X	1 st E/B → 1 st	X→○	X	X	○→X	X→○	1 st E/B → 2nd	X	X→○	X	○→X	X	1 st E/B → 1 st	X	X	X	○→X	X→○

DIDW1–01

HOW TO PROCEED WITH TROUBLESHOOTING

Items inside ▱ are titles of pages in this manual, with the page number indicated in the bottom portion. See the indicated pages for detailed explanations.

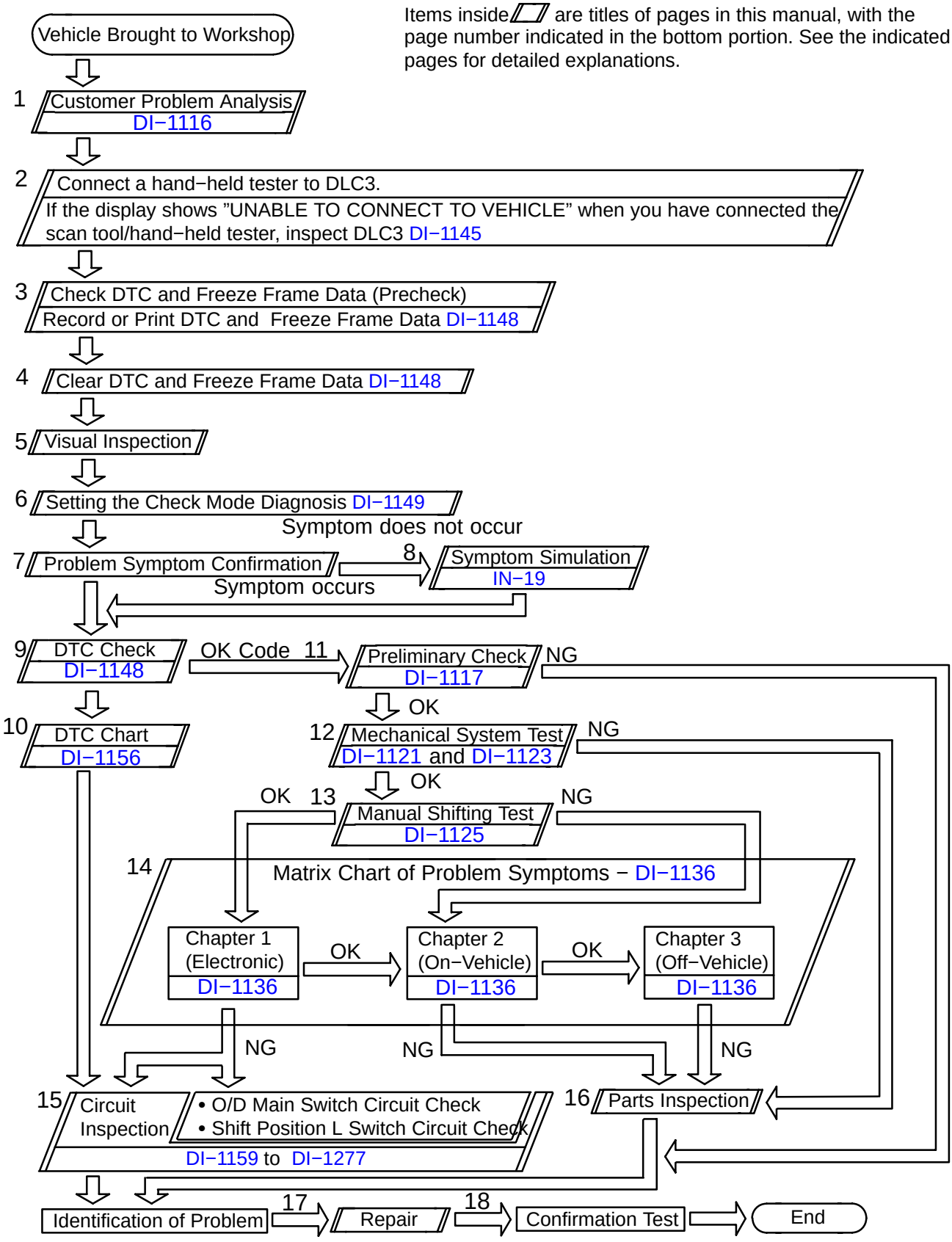

DIDW6−01

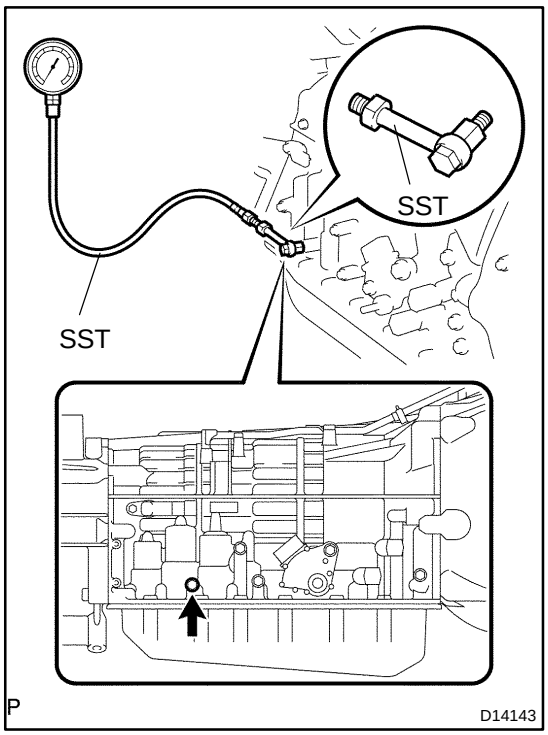

HYDRAULIC TEST

1. PERFORM HYDRAULIC TEST

Measure the line pressure.

NOTICE:

- **Perform the test at the normal operating ATF (Automatic Transmission Fluid) temperature: 50 to 80°C (122 to 176°F).**
- **The line pressure test should always be carried out in pairs. One technician should observe the conditions of wheels or wheel stoppers outside the vehicle while the other is performing the test.**
- **Be careful to prevent SST hose from interfering with the exhaust pipe.**
- **This check must be conducted after checking and adjusting engine.**
- **Perform under condition that A/C is OFF.**
- **When conducting stall test, do not continue more than 10 seconds.**

(1) Warm up the ATF (Automatic Transmission Fluid).
(2) Lift the vehicle up.
(3) Remove the test plug on the transmission case center right side and connect SST.

SST 09992−00095 (09992−00231, 09992−00271)

(4) Fully apply the parking brake and chock the 4 wheels.
(5) Start the engine and check idling speed.
(6) Keep your left foot pressing firmly on the brake pedal and shift into D position.
(7) Measure the line pressure when the engine is idling.
(8) Depress the accelerator pedal all the way down. Quickly read the highest line pressure when engine speed reaches stall speed.
(9) In the same manner, do the test in R position.

Specified line pressure:

Condition	D position kPa (kgf / cm^2, psi)	R position kPa (kgf / cm^2, psi)
Idling	361 to 421 kPa (3.7 to 4.3 kgf/cm^2, 52 to 61 psi)	495 to 576 kPa (5.0 to 5.9 kgf/cm^2, 72 to 84 psi)
Stall test	1,236 to 1,332 kPa (12.6 to 13.6 kgf/cm^2, 179 to 193 psi)	1,229 to 1,349 kPa (12.5 to 13.8 kgf/cm^2, 178 to 196 psi)

Evaluation

Problem	Possible cause
Measured values are higher than specified in all positions	• Shift solenoid valve (SLT) defective • Regulator valve defective
Measured values are lower than specified in all positions	• Shift solenoid valve (SLT) defective • Regulator valve defective • Oil pump defective
Pressure is low in the D position only	• D position circuit fluid leak • Clutch No.1 (C_1) defective
Pressure is low in the R position only	• R position circuit fluid leak • Clutch No.3 (C_3) defective • Brake No.4 (B_4) defective

DIDW8−01

INITIALIZATION

1. RESET MEMORY

NOTICE:

- **Perform the RESET MEMORY (AT initialization) when replacing the automatic transmission assy or ECM.**
- **The RESET MEMORY can be performed only with the Hand−held tester.**

HINT:

The ECM memorizes the condition that the ECT controls the automatic transmission assy and engine assy according to those characteristics. Therefore, when the automatic transmission assy, engine assy, or ECM has been replaced, it is necessary to reset the memory so that the ECM can memorize the new information. Reset procedure is as follows.

(a) Turn the ignition switch off.
(b) Connect the hand−held tester to the DLC3.
(c) Turn the ignition switch to the ON position.
(d) Turn the hand−held tester main switch on.
(e) Select the item ”DIAGNOSIS/ENHANCED OBD II”.
(f) Perform the reset memory procedure from the ENGINE menu.

NOTICE:

After performing the RESET MEMORY, be sure to perform the ROAD TEST (See page DI−1118) described earlier.

HINT:

The ECM learns through use of the ROAD TEST.

Tester menu flow:

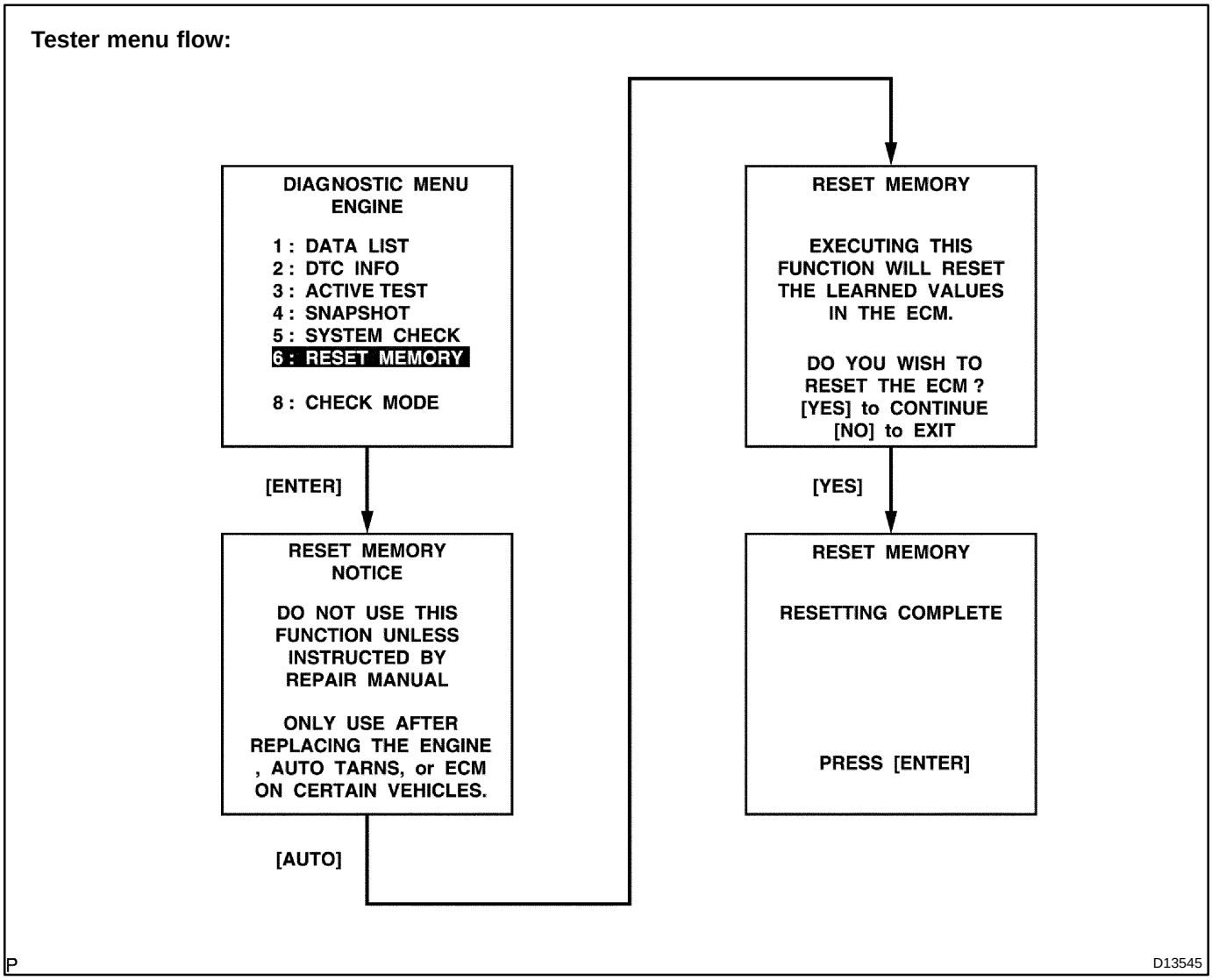

DIDVY−01

LOCATION

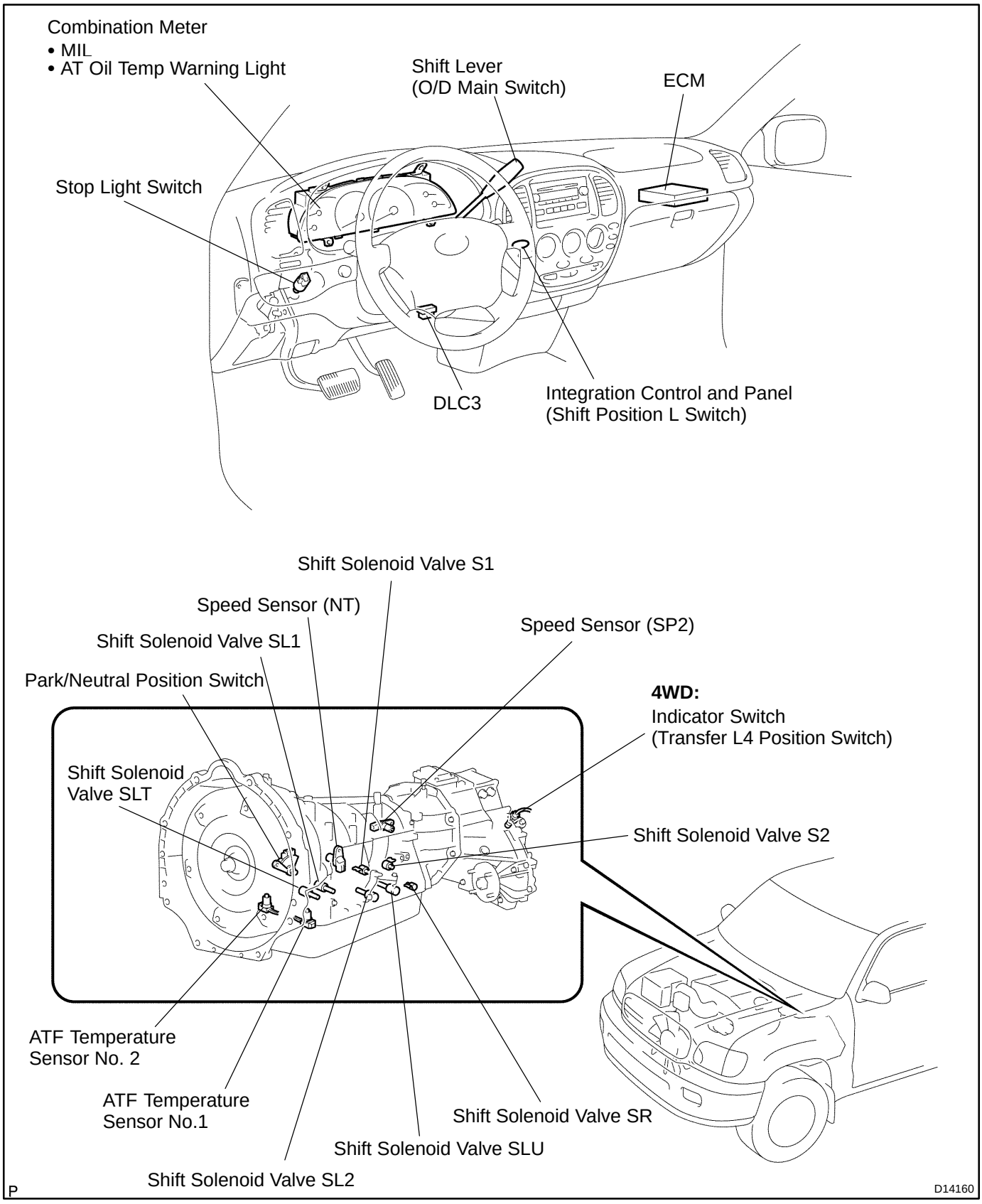

DIDW9−01

LIST OF DISABLE A MONITOR

HINT:

This table indicates ECM monitoring status for the items in the upper columns if the DTCs in each line on the left are being set.

As for the ”X” mark, when the DTC on the left is stored, detection of the DTC in the upper column is not performed.

Monitor detected malfunction

Fault code	Fault code	Component/ system	Monitor disablement (X - disabled)																										
			P0010,P0020	P0011	P0012	P0016,P0018	P0021	P0022	P0030,50	P0135,P0155	P0036,56	P0043,44,63,64	P0100	P0101	P0105	P0106	P0110	P0115	P0116	P0120,P0121	P0125	P0128	P0130-P0153	P0134,P0154	P0136,P0156	P0142,P0162	P0171,P0172	P0300-P0308
			P0010,P0020	P0011	P0012	P0016,P0018	P0021	P0022	P0031,32,51,52	P0031,32,51,52	P0037,38,57,58	P0043,44,63,64	P0100-P0103	P0101	P0105-P0108	P0106	P0110-P0113	P0115-P0118	P0116	P0120-P0223,P2135	P0125	P0128	P0130-P0153	P0134,P0154	P0136,P0156	P0142,P0162	P0171,P0172	P0300-P0308
			VVT VSV1,2	VVT System1 -Advance	VVT System1 - Retard	VVT System - Misalignment	VVT System2 - Advance	VVT System2 - Retard	O2 Sensor Heater - Sensor1	A/F Sensor Heater - Sensor1	O2 Sensor Heater - Sensor2	O2 Sensor Heater - Sensor3	MAF sensor	MAF sensor	MAP sensor	MAP sensor	IAT sensor	ECT sensor	ECT sensor	TP sensor	Insufficient ECT for Closed Loop	Thermostat	O2 Sensor -Sensor1	O2 Sensor, A/F Sensor(No Activity) - Sensor1	O2 Sensor - Sensor2	O2 Sensor - Sensor3	Fuel system	Misfire
P0010,P0020	P0010,P0020	VVT VSV1,2																				X							
P0011	P0011	VVT System1 - Advance				X		X														X					X		
P0012	P0012	VVT System1 - Retard				X		X														X					X		
P0016,P0018	P0016,P0018	VVT System - Misalignment																											
P0021	P0021	VVT System2 - Advance			X	X																X					X		
P0022	P0022	VVT System2 - Retard			X	X																X					X		
P0030,50	P0031,32,51,52	O2 Sensor Heater - Sensor1																				X	X	X	X	X	X		
P0135,P0155	P0031,32,51,52	A/F Sensor Heater - Sensor1																				X			X	X	X		
P0036,56	P0037,38,57,58	O2 Sensor Heater - Sensor2																							X	X			
P0043,44,63,64	P0043,44,63,64	O2 Sensor Heater - Sensor3																								X			
P0100,P0101	P0100-P0103	MAF sensor		X	X		X	X											X		X	X	X	X	X	X	X	X	X
P0105,P0106	P0105-P0108	MAP sensor		X	X		X	X											X		X	X	X	X	X	X	X	X	X
P0110	P0110-P0113	IAT sensor																			X	X	X	X	X	X			X
P0115,P0116	P0115-P0118	ECT sensor		X	X	X	X	X						X		X					X	X	X	X	X	X	X	X	X
P0120,P0121	P0120-P0223,P2135	TP sensor												X		X							X	X	X	X	X	X	X
P0125	P0125	Insufficient ECT for Closed Loop		X	X		X	X						X		X						X	X	X	X	X	X	X	X
P0128	P0128	Thermostat																											
P0130-P0153	P0130-P0153	O2 Sensor - Sensor1																				X		X	X	X			
P0134,P0154	P0134,P0154	O2 Sensor, A/F Sensor(No Activity) - Sensor1								X												X	X		X	X	X		
P0136,P0156	P0136,P0156	O2 Sensor - Sensor2																											
P0142,P0162	P0142,P0162	O2 Sensor - Sensor3																											
P0171,P0172	P0171,P0172	Fuel system																				X	X	X	X	X			
P0300-P0308	P0300-P0308	Misfire							X													X	X	X	X	X			
P0325,P0330	P0325-P0333	Knock sensor																											X
P0335	P0335	CKP sensor		X	X		X	X						X		X						X	X	X	X	X	X	X	X
P0340, P0341	P0340, P0341	CMP sensor		X	X		X	X						X		X						X	X	X	X	X	X	X	X
P0340-P0346	P0340-P0346	VVT sensor1,2																				X							
P0351-P0358	P0351-P0358	Ignitor		X	X		X	X														X					X		
P0385	P0385	CKP sensor 2												X		X						X	X	X	X	X	X	X	X
P0401	P0401	EGR system (closed)																				X					X		
P0402	P0402	EGR system (open)																				X	X	X	X	X	X		
P0405,P0409	P0405-P0409	Lift sensor																											
P0420,P0430	P0420,P0430	Catalyst																											
P0442-P0456	P0442-P0456	EVAP system																					X	X	X	X			
P0450,P0451	P0450-P0453	EVAP press sensor																											

C A21570

A22717

Monitor detected malfunction

Fault code	Fault code	Component/ system	Monitor disablement (X - disabled)																										
			P0010,P0020	P0011	P0012	P0016,P0018	P0021	P0022	P0030,50	P0135,P0155	P0036,56	P0043,44,63,64	P0100	P0101	P0105	P0106	P0110	P0115	P0116	P0120,P0121	P0125	P0128	P0130-P0153	P0134,P0154	P0136,P0156	P0142,P0162	P0171,P0172	P0300-P0308
	P0010,P0020	VVT VSV1,2																											
	P0011	VVT System1 -Advance																											
	P0012	VVT System1 - Retard																											
	P0016,P0018	VVT System - Misalignment																											
	P0021	VVT System2 - Advance																											
	P0022	VVT System2 - Retard																											
	P0031,32,51,52	O2 Sensor Heater - Sensor1																											
	P0031,32,51,52	A/F Sensor Heater - Sensor1																											
	P0037,38,57,58	O2 Sensor Heater - Sensor2																											
	P0043,44,63,64	O2 Sensor Heater - Sensor3																											
	P0100-P0103	MAF sensor																											
	P0101	MAF sensor												X								X	X		X	X	X	X	X
	P0105-P0108	MAP sensor																											
	P0106	MAP sensor												X		X													
	P0110-P0113	IAT sensor																											
	P0115-P0118	ECT sensor																											
	P0116	ECT sensor																											
	P0120-P0223,P2135	TP sensor																											
	P0125	Insufficient ECT for Closed Loop																											
	P0128	Thermostat																				X	X	X	X	X	X	X	X
	P0130-P0153	O2 Sensor -Sensor1																				X	X		X	X	X	X	
	P0134,P0154	O2 Sensor, A/F Sensor(No Activity) - Sensor1																											
	P0136,P0156	O2 Sensor - Sensor2																							X	X			
	P0142,P0162	O2 Sensor - Sensor3																							X	X			
	P0171,P0172	Fuel system																									X		
	P0300-P0308	Misfire																										X	
P0500	P0500	VSS																				X	X	X	X	X	X	X	X
P0511	P0511	IAC valve																					X						
P0510	P0510	Idle switch												X		X						X	X		X	X	X	X	X
P0560	P0560	System Voltage																											
P0617	P0617	Starter signal																											
P0705	P0705	Shift lever position switch																											
P0710	P0710-P0713	Trans fluid temp sensor																											
P0720-P0793	P0720-P0793	Output speed sensor																											
P0715-P0717	P0715-P0717	Input speed sensor																											
P0724	P0724	Stop lamp switch																											
P0741-P0796	P0741-P0796	Trans solenoid (function)																											
P0748-P0798	P0748-P0799	Trans solenoid (range)																											
P0850	P0850	PNP switch																											X
P1010,P1020	P1010,P1020	VVTL																				X					X		
P1011,12(,21,22)	P1011,12(,21,22)	VVTL system1(,2)																				X					X		
P1126	P1126	Electronic magnet clutch																											
P1129	P1129	Electronic throttle system																											
P1430	P1430	HC adsorber ACT press sensor																											
P2004,6	P2004,6	Intake Manifold Runner Control																											
P2009,10	P2009,10	Intake Manifold Runner Control Circuit																											
P2014,16,17	P2014,16,17	Intake Manifold Runner Position Sensor																											
P2102,P2103	P2102,P2103	Throttle motor																											
P2120-P2138	P2120-P2138	Accel position sensor																											
P2196,P2198	P2196,P2198	A/F sensor (rationality)																				X			X	X			
P2226	P2226	BARO sensor																					X		X	X			
P2237,P2240	P2237,P2240	A/F sensor (open)																				X			X	X			
P2423,24	P2423,24	HC Adsorption Catalyst																											
P2430,2,3	P2430,2,3	AIR Pressure Sensor(Low/High)																											
P2431	P2431	AIR Pressure Sensor(Rationality)																											
P2440	P2440	AIR control valve stuck open																					X	X	X	X	X		
P2441	P2441	AIR control valve stuck close																					X	X	X	X	X		
P2444	P2444	AIP stuck On																					X	X	X	X	X		
P2445	P2445	AIP stuck Off																					X	X	X	X	X		
P2714-P2759	P2714-P2759	Trans solenoid(SLU-SLD)																											
P2A00,P2A03	P2A00,P2A03	A/F sensor (slow response)																				X			X	X			

C

A21571

Monitor detected malfunction

Fault code	Fault code	Component/ system	Monitor disablement (X - disabled)																												
			P0325,P0330	P0335	P0340,P0341	P0340-P0346	P0351-P0358	P0385	P0401	P0402	P0405	P0409	P0420,P0430	P0440-P0446	P0450,P0451	P0500	P0500	P0500	P0511	P0510	P0560	P0617	P0705	P0710	P0720-P0793	P0715-P0717	P0724	P0741-P0796			
			P0325-P0333	P0335	P0340,P0341	P0340-P0346	P0351-P0358	P0385	P0401	P0402	P0405,P0406	P0409	P0420,P0430	P0440-P0446	P0450-P0453	P0500	P0500	P0500	P0511	P0510	P0560	P0617	P0705	P0710-P0713	P0720-P0793	P0715-P0717	P0724	P0741-P0796			
			Knock sensor	CKP sensor	CMP sensor	VVT sensor1,2	Ignitor	CKP sensor 2	EGR system (closed)	EGR system (open)	EGR Lift sensor	EGR Lift sensor	Catalyst	EVAP system	EVAP press sensor	VSS(ECT2sensor)	VSS(ECT1sensor, non-ECT)	VSS(M/T)	IAC valve	Idle switch	System Voltage	Starter signal	Shift lever position switch	Trans fluid temp sensor	Output speed sensor	Input speed sensor	Stop lamp switch	Trans solenoid (function)*1			
P0010,P0020	P0010,P0020	VVT VSV1,2																										X			
P0011	P0011	VVT System1 - Advance							X	X			X	X					X												
P0012	P0012	VVT System1 - Retard							X	X			X	X					X												
P0016,P0018	P0016,P0018	VVT System - Misalignment																													
P0021	P0021	VVT System2 - Advance							X	X			X	X					X												
P0022	P0022	VVT System2 - Retard							X	X			X	X					X												
P0030,50	P0031,32,51,52	O2 Sensor Heater - Sensor1							X	X			X						X										X		
P0135,P0155	P0031,32,51,52	A/F Sensor Heater - Sensor1							X	X			X						X												
P0036,56	P0037,38,57,58	O2 Sensor Heater - Sensor2											X																		
P0043,44,63,64	P0043,44,63,64	O2 Sensor Heater - Sensor3																													
P0100,P0101	P0100-P0103	MAF sensor							X	X			X	X				X	X										X		
P0105,P0106	P0105-P0108	MAP sensor							X	X			X	X				X	X										X		
P0110	P0110-P0113	IAT sensor							X	X				X															X		
P0115,P0116	P0115-P0118	ECT sensor							X	X		X	X	X				X	X										X		
P0120,P0121	P0120-P0223,P2135	TP sensor							X	X			X	X			X		X										X		
P0125	P0125	Insufficient ECT for Closed Loop							X	X		X	X	X				X	X										X		
P0128	P0128	Thermostat																													
P0130-P0153	P0130-P0153	O2 Sensor - Sensor1							X	X			X						X										X		
P0134,P0154	P0134,P0154	O2 Sensor, A/F Sensor(No Activity) - Sensor1							X	X			X						X										X		
P0136,P0156	P0136,P0156	O2 Sensor - Sensor2											X																		
P0142,P0162	P0142,P0162	O2 Sensor - Sensor3																													
P0171,P0172	P0171,P0172	Fuel system							X	X			X	X					X										X		
P0300-P0308	P0300-P0308	Misfire											X	X					X										X		
P0325,P0330	P0325-P0333	Knock sensor							X	X									X										X		
P0335	P0335	CKP sensor							X	X			X	X					X										X		
P0340, P0341	P0340, P0341	CMP sensor							X	X			X	X					X										X		
P0340-P0346	P0340-P0346	VVT sensor1,2																													
P0351-P0358	P0351-P0358	Ignitor							X	X			X	X					X										X		
P0385	P0385	CKP sensor 2							X	X			X	X					X												
P0401	P0401	EGR system (closed)											X																X		
P0402	P0402	EGR system (open)											X	X					X										X		
P0405,P0409	P0405-P0409	Lift sensor																													
P0420,P0430	P0420,P0430	Catalyst																													
P0442-P0456	P0442-P0456	EVAP system																	X												
P0450,P0451	P0450-P0453	EVAP press sensor												X																	

C A22718 A21572

A22768

Monitor detected malfunction

Fault code	Fault code	Component/ system	Monitor disablement (X - disabled)																														
			P0325,P0330	P0335	P0340,P0341	P0340-P0346	P0351-P0358	P0385	P0401	P0402	P0405,P0406	P0409	P0420,P0430	P0440-P0446	P0450,P0451	P0500	P0500	P0500	P0511	P0510	P0560	P0617	P0705	P0710-P0713	P0720-P0793	P0715-P0717	P0724	P0741-P0796						
			P0325-P0333	P0335	P0340,P0341	P0340-P0346	P0351-P0358	P0385	P0401	P0402	P0405,P0406	P0409	P0420,P0430	P0440-P0446	P0450-P0453	P0500	P0500	P0500	P0511	P0510	P0560	P0617	P0705	P0710-P0713	P0720-P0793	P0715-P0717	P0724	P0741-P0796						
			Knock sensor	CKP sensor	CMP sensor	VVT sensor1,2	Ignitor	CKP sensor 2	EGR system (closed)	EGR system (open)	EGR Lift sensor	EGR Lift sensor	Catalyst	EVAP system	EVAP press sensor	VSS(ECT2sensor)	VSS(ECT1sensor, non-ECT)	VSS(M/T)	IAC valve	Idle switch	System Voltage	Starter signal	Shift lever position switch	Trans fluid temp sensor	Output speed sensor	Input speed sensor	Stop lamp switch	Trans solenoid (function)*1						
P0500	P0500	VSS							X	X			X	X					X						X	X		X					
P0511	P0511	IAC valve																															
P0510	P0510	Idle switch								X			X	X					X									X					
P0560	P0560	System Voltage																															
P0617	P0617	Starter signal																															
P0705	P0705	Shift lever position switch																															
P0710	P0710-P0713	Trans fluid temp sensor																															
P0720-P0793	P0720-P0793	Output speed sensor																															X
P0715-P0717	P0715-P0717	Input speed sensor																															
P0724	P0724	Stop lamp switch																															
P0741-P0796	P0741-P0796	Trans solenoid (function)																															
P0748-P0798	P0748-P0799	Trans solenoid (range)																							X	X		X					
P0850	P0850	PNP switch																	X									X					
P1010,P1020	P1010,P1020	VVTL																															
P1011,12(,21,22)	P1011,12(,21,22)	VVTL system1(,2)							X	X			X	X					X														
P1126	P1126	Electronic magnet clutch																															
P1129	P1129	Electronic throttle system																															
P1430	P1430	HC adsorber ACT press sensor												X	X																		
P2004,6	P2004,6	Intake Manifold Runner Control																															
P2009,10	P2009,10	Intake Manifold Runner Control Circuit																															
P2014,16,17	P2014,16,17	Intake Manifold Runner Position Sensor																															
P2102,P2103	P2102,P2103	Throttle motor																															
P2120-P2138	P2120-P2138	Accel position sensor																															
P2196,P2198	P2196,P2198	A/F sensor (rationality)							X	X			X						X									X					
P2226	P2226	BARO sensor																										X					
P2237,P2240	P2237,P2240	A/F sensor (open)							X	X			X						X									X					
P2423,24	P2423,24	HC Adsorption Catalyst																															
P2430,2,3	P2430,2,3	AIR Pressure Sensor(Low/High)																															
P2431	P2431	AIR Pressure Sensor(Rationality)																															
P2440	P2440	AIR control valve stuck open							X	X			X																				
P2441	P2441	AIR control valve stuck close							X	X			X																				
P2444	P2444	AIP stuck On							X	X			X																				
P2445	P2445	AIP stuck Off							X	X			X																				
P2714-P2759	P2714-P2759	Trans solenoid(SLU-SLD)																										X					
P2A00,P2A03	P2A00,P2A03	A/F sensor (slow response)							X	X			X						X									X					

C

A21573

Monitor detected malfunction				Monitor disablement (X - disabled)																									
	Fault code			P0741-P0796	P0748-P0798	P0850	P1010,P1020	P1011,12(,21,22)	P1126	P1129	P1430	P2004,P2006	P2009,P2010	P2014,16,17	P2102,P2103	P2120-P2138	P2196,P2198	P2226	P2237,P2240	P2423,24	P2430,2,3	P2431	P2440	P2441	P2444	P2445	P2714-P2759	P2A00,P2A03
	Fault code			P0741-P0796	P0748-P0999	P0850	P1010,P1020	P1011,12(,21,22)	P1126	P1129	P1430	P2004,6	P2009,10	P2014,16,17	P2102,P2103	P2120-P2138	P2196,P2198	P2226	P2237,P2240	P2423,24	P2430,2,3	P2431	P2440	P2441	P2444	P2445	P2714-P2759	P2A00,P2A03
		Component/ system		Trans solenoid (function)*2	Trans solenoid (range)	PNP switch	VVTL	VVTL system1(,2)	Electronic magnet clutch	Electronic throttle system	HC adsorber ACT press sensor	Intake Manifold Runner Control	Intake Manifold Runner Control Circuit	Intake Manifold Runner Position Sensor	Throttle motor	Accel position sensor	A/F Sensor(Rationality) - Sensor1	BARO sensor	A/F Sensor(Open) - Sensor1	HC Adsorption Catalyst	AIR Pressure Sensor(Low/High)	AIR Pressure Sensor(Rationality)	AIR control valve stuck open	AIR control valve stuck close	AIP stuck On	AIP stuck Off	Trans solenoid(SLU-SLD)	A/F Sensor (Slow response) - Sensor1
	P0010,P0020	P0010,P0020	VVT VSV1,2																				X	X	X	X		
	P0011	P0011	VVT System1 - Advance																				X	X	X	X		
	P0012	P0012	VVT System1 - Retard																				X	X	X	X		
	P0016,P0018	P0016,P0018	VVT System - Misalignment																				X	X	X	X		
	P0021	P0021	VVT System2 - Advance																				X	X	X	X		
	P0022	P0022	VVT System2 - Retard																				X	X	X	X		
	P0030,50	P0031,32,51,52	O2 Sensor Heater - Sensor1																X				X	X	X	X		
	P0135,P0155	P0031,32,51,52	A/F Sensor Heater - Sensor1														X		X	X			X	X	X	X		X
	P0036,56	P0037,38,57,58	O2 Sensor Heater - Sensor2														X			X								
	P0043,44,63,64	P0043,44,63,64	O2 Sensor Heater - Sensor3																	X								
	P0100,P0101	P0100-P0103	MAF sensor				X	X									X		X	X			X	X	X	X		X
	P0105,P0106	P0105-P0108	MAP sensor				X	X									X		X	X			X	X	X	X		X
	P0110	P0110-P0113	IAT sensor									X					X		X				X	X	X	X		X
	P0115,P0116	P0115-P0118	ECT sensor	X			X	X				X					X		X	X			X	X	X	X		X
	P0120,P0121	P0120-P0223,P2135	TP sensor														X		X	X			X	X	X	X		X
	P0125	P0125	Insufficient ECT for Closed Loop	X			X										X		X	X			X	X	X	X		X
	P0128	P0128	Thermostat																									
	P0130-P0153	P0130-P0153	O2 Sensor - Sensor1																	X			X	X	X	X		
	P0134,P0154	P0134,P0154	O2 Sensor, A/F Sensor(No Activity) - Sensor1														X		X	X			X	X	X	X		X
	P0136,P0156	P0136,P0156	O2 Sensor - Sensor2														X			X								
	P0142,P0162	P0142,P0162	O2 Sensor - Sensor3																	X								
	P0171,P0172	P0171,P0172	Fuel system														X		X	X			X	X	X	X		X
	P0300-P0308	P0300-P0308	Misfire														X		X	X			X	X	X	X		X
	P0325,P0330	P0325-P0333	Knock sensor																				X	X	X	X		
	P0335	P0335	CKP sensor				X	X									X		X	X			X	X	X	X		X
	P0340, P0341	P0340, P0341	CMP sensor				X	X									X		X	X			X	X	X	X		X
	P0340-P0346	P0340-P0346	VVT sensor1,2																				X	X	X	X		
	P0351-P0358	P0351-P0358	Ignitor																	X			X	X	X	X		
	P0385	P0385	CKP sensor 2				X	X									X		X	X			X	X	X	X		X
	P0401	P0401	EGR system (closed)																	X								
	P0402	P0402	EGR system (open)														X		X	X			X	X	X	X		X
	P0405,P0409	P0405-P0409	Lift sensor																									
	P0420,P0430	P0420,P0430	Catalyst																									
	P0442-P0456	P0442-P0456	EVAP system														X		X				X	X	X	X		X
	P0450,P0451	P0450-P0453	EVAP press sensor																				X	X	X	X		

C

A21575

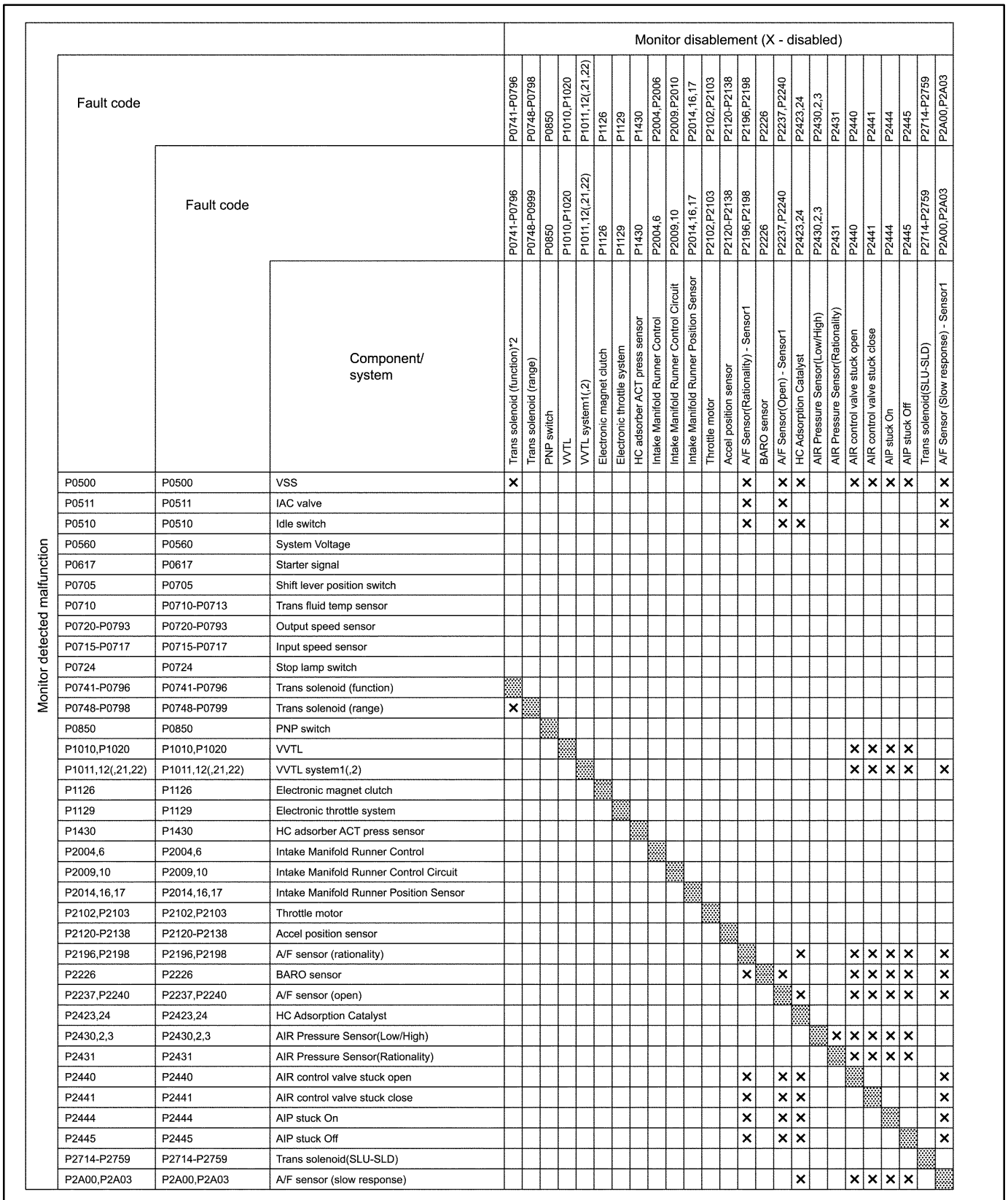
Monitor detected malfunction
Fault code
Fault code
Component/ system
Monitor disablement (X - disabled)
P0741-P0796
P0748-P0798
P0850
P1010,P1020
P1011,12(,21,22)
P1126
P1129
P1430
P2004,P2006
P2009,P2010
P2014,16,17
P2102,P2103
P2120-P2138
P2196,P2198
P2226
P2237,P2240
P2423,24
P2430,2,3
P2431
P2440
P2441
P2444
P2445
P2714-P2759
P2A00,P2A03
P0500 VSS
P0511 IAC valve
P0510 Idle switch
P0560 System Voltage
P0617 Starter signal
P0705 Shift lever position switch
P0710 Trans fluid temp sensor
P0720-P0793 Output speed sensor
P0715-P0717 Input speed sensor
P0724 Stop lamp switch
P0741-P0796 Trans solenoid (function)
P0748-P0799 Trans solenoid (range)
P0850 PNP switch
P1010,P1020 VVTL
P1011,12(,21,22) VVTL system1(,2)
P1126 Electronic magnet clutch
P1129 Electronic throttle system
P1430 HC adsorber ACT press sensor
P2004,6 Intake Manifold Runner Control
P2009,10 Intake Manifold Runner Control Circuit
P2014,16,17 Intake Manifold Runner Position Sensor
P2102,P2103 Throttle motor
P2120-P2138 Accel position sensor
P2196,P2198 A/F sensor (rationality)
P2226 BARO sensor
P2237,P2240 A/F sensor (open)
P2423,24 HC adsorption Catalyst
P2430,2,3 AIR Pressure Sensor(Low/High)
P2431 AIR Pressure Sensor(Rationality)
P2440 AIR control valve stuck open
P2441 AIR control valve stuck close
P2444 AIP stuck On
P2445 AIP stuck Off
P2714-P2759 Trans solenoid(SLU-SLD)
P2A00,P2A03 A/F sensor (slow response)
Trans solenoid (function)*2
Trans solenoid (range)
PNP switch
VVTL
VVTL system1(,2)
Electronic magnet clutch
Electronic throttle system
HC adsorber ACT press sensor
Intake Manifold Runner Control
Intake Manifold Runner Control Circuit
Intake Manifold Runner Position Sensor
Throttle motor
Accel position sensor
A/F Sensor(Rationality) - Sensor1
BARO sensor
A/F Sensor(Open) - Sensor1
HC Adsorption Catalyst
AIR Pressure Sensor(Low/High)
AIR Pressure Sensor(Rationality)
AIR control valve stuck open
AIR control valve stuck close
AIP stuck On
AIP stuck Off
Trans solenoid(SLU-SLD)
A/F Sensor (Slow response) - Sensor1

C

A21576

DIDWA−01

MONITOR DRIVE PATTERN

1. MONITOR DRIVE PATTERN FOR ECT TEST

(a) Perform this drive pattern as one method to simulate the detection conditions of the ECT malfunctions. (The DTCs may not be detected due to the actual driving conditions. And some codes may not be detected through this drive pattern.)

HINT:

Preparation for driving

- Warm up the engine sufficiently. (Engine coolant temperature is 60 °C (140 °F) or higher).
- Drive the vehicle when the atmospheric temperature is −10 °C (14 °F) or higher. (Malfunction is not detected when the atmospheric temperature is −10 °C (14 °F) or less).

Notice in driving

- Drive the vehicle through all gears.
  Stop → 1st → 2nd → 3rd → 4th → 5th → 5th (lock−up ON).
- Repeat the above driving pattern three times or more.

NOTICE:

- **The monitor status can be checked using the OBD II scan tool. When using the hand−held tester, monitor status can be found in the ”ENHANCED OBD II / DATA LIST” or under ”CARB OBD II”.**
- **In the event that the drive pattern must be interrupted (possibly due to traffic conditions or other factors), the drive pattern can be resumed and, in most cases, the monitor can be completed.**
- **Perform this drive pattern on a level road as much as possible and strictly observe the posted speed limits and traffic laws while driving.**

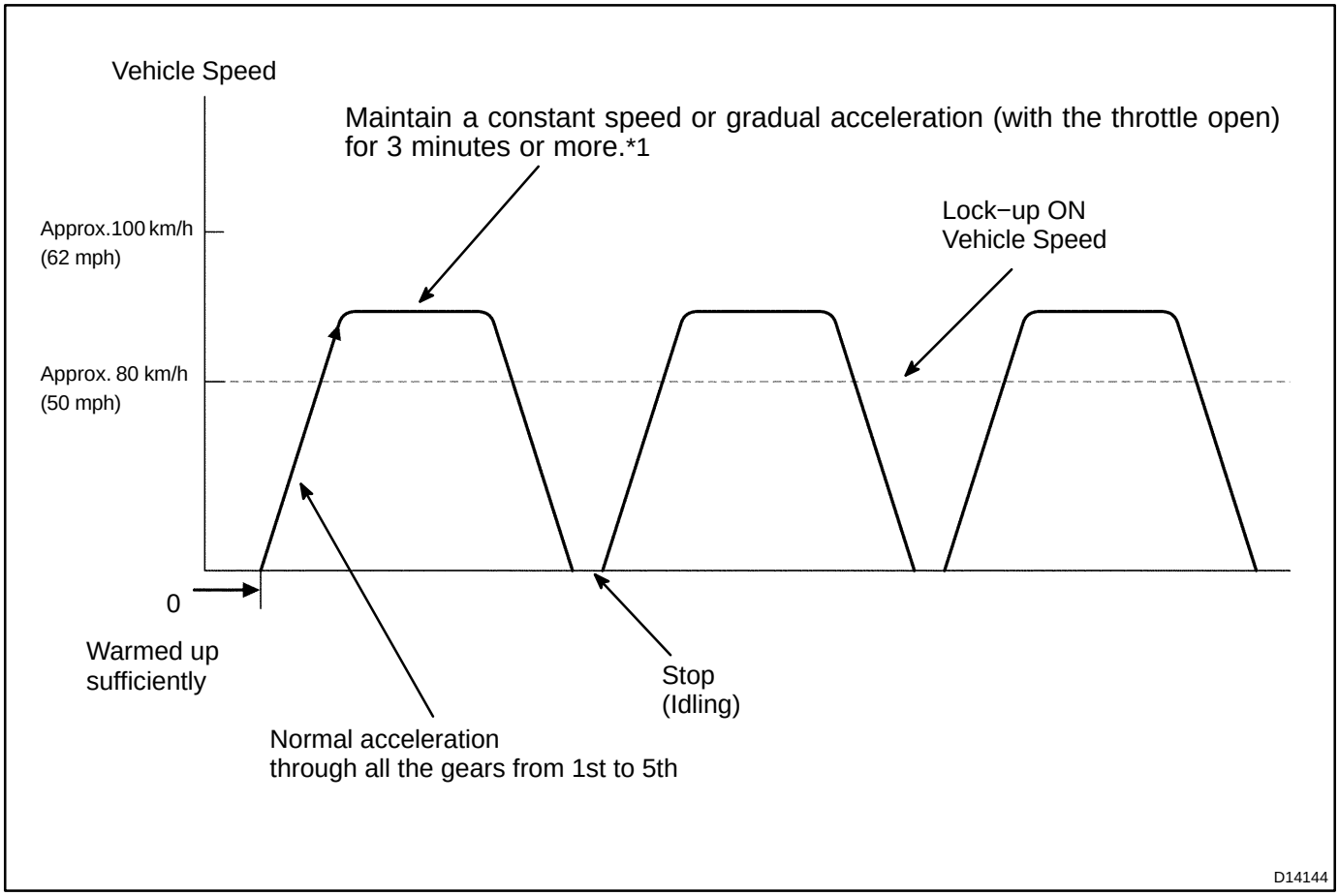

HINT:

*1: Drive at such a speed in the uppermost gear, to engage lock−up. The vehicle can be driven at a speed lower than that in the above diagram under the lock−up condition.

NOTICE:

It is necessary to drive the vehicle for approximately 30 minutes to detect DTC P0711 (ATF temperature sensor malfunction).

DIDW5−01

MECHANICAL SYSTEM TESTS

1. PERFORM MECHANICAL SYSTEM TESTS

(a) Measure the stall speed.

The object of this test is to check the overall performance of the transmission and engine by measuring the stall speeds in the D positions.

NOTICE:

- **Perform the test at the normal operating ATF (Automatic Transmission Fluid) temperature 50 to 80°C (122 to 176°F).**
- **Do not continuously run this test for longer than 5 seconds.**
- **To ensure safety, do this test in a wide, clear level area which provides good traction.**
- **The stall test should always be carried out in pairs. One technician should observe the conditions of wheels or wheel stoppers outside the vehicle while the other is doing the test.**

(1) Chock all 4 wheels.
(2) Connect a hand−held tester to DLC3.
(3) Fully apply the parking brake.
(4) Using your left foot, keep the brake pedal firmly depressed.
(5) Start the engine.
(6) Shift into the D position. Press all the way down on the accelerator pedal with your right foot.
(7) Quickly read the stall speed at this time.

Stall speed: 2,200 ± 150 rpm

Evaluation:

Problem	Possible cause
(a) Stall engine speed is low in D position	• Engine power output may be insufficient • Stator one−way clutch is not operating properly HINT: If the value is less than the specified value by 600 rpm or more, the torque converter could be faulty.
(b) Stall engine speed is high in D position	• Line pressure is too low • Clutch No.1 (C_1) slipping • One−way clutch No.3 (F_3) is not operating properly • Improper fluid level

(b) Measure the time lag.

When the shift lever is shifted while the engine is idling, there will be a certain time lapse or lag before the shock can be felt. This is used for checking the condition of the direct clutch, forward clutch, and 1st and reverse brake.

NOTICE:

- **Perform the test at the normal operating ATF (Automatic Transmission Fluid) temperature: 50 to 80°C (122 to 176°F).**
- **Be sure to allow for a 1 minute interval between tests.**
- **Perform the test three times, and measure the time lags. Calculate the average value of the three time lags.**

(1) Connect a hand−held tester to DLC3.

(2) Fully apply the parking brake.

(3) Start and warm up the engine and check idle speed.

Idle speed: approx. 700 rpm (In N position and A/C OFF)

(4) Shift the lever from the N to D position. Using a stop watch, measure the time from when the lever is shifted until the shock is felt.

Time lag:

N → D Less than 1.2 seconds

(5) In the same manner, measure the time lag for N → R.

Time lag:

N → R Less than 1.5 seconds

Evaluation (If N → D time or N → R time lag is longer than the specified):

Problem	Possible cause
N → D time lag is longer than specified	• Line pressure is too low • Clutch No.1 (C_1) worn • One−way clutch No.3 (F_3) is not operating properly
N → R time lag is longer than specified	• Line pressure is too low • Clutch No.3 (C_3) worn • Brake No.4 (B_4) worn • One−way clutch No.1 (F_1) is not operating properly

DIDW7−01

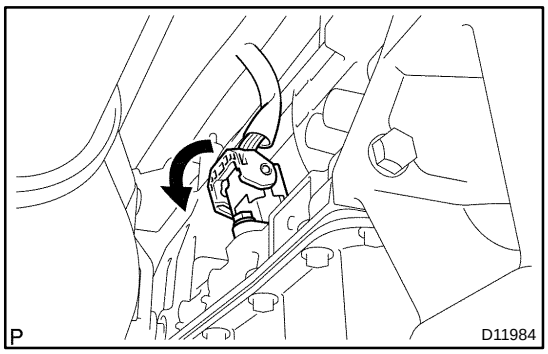

MANUAL SHIFTING TEST

1. MANUAL SHIFTING TEST

HINT:

- With this test, it can be determined whether the trouble occurs in the electrical circuit or is a mechanical problem in the transmission.
- If any abnormalities are found in the following test, the problem is in the transmission itself.

(a) Disconnect the connector of the transmission wire.

(b) Drive with the transmission wire disconnected.
Shifting the shift lever to the L, 2, 3, 4 and D position to check whether the shifting condition changes the table below.

Shift Position	Shifting Condition
L ⇔ 2	No Shift (Not Change)
2 ⇔ 3	Down Shift ⇔ Up Shift
3 ⇔ 4	Down Shift ⇔ Up Shift
4 ⇔ D	No Shift (Not Change)

HINT:

When driving with the transmission wire disconnected, the gear position will be as follows:

- When the shift lever is in the L or the 2 position, the gear is held in the 1st position.
- When the shift lever is in the 3rd position, the gear is held in the 3rd position.
- When the shift lever is in the 4 or the D position, the gear is held in the 4th position.
- When the shift lever is in the R or the P position, the gear is also in the R or the P position respectively.

(c) Connect the connector of the transmission wire.

(d) Clear the DTC (See page DI−1148).

AUTOMATIC TRANSMISSION (A750E/A750F for 2UZ−FE)

DIDVV−01

PRECAUTION

NOTICE:

Perform the RESET MEMORY (AT initialization) when replacing the automatic transmission assy, engine assy or ECM (See page DI−1126).

HINT:

RESET MEMORY cannot be completed by only disconnecting the battery terminal.

DIDWB−01

PROBLEM SYMPTOMS TABLE

HINT:

If a normal code is displayed during the diagnostic trouble code check although the trouble still occurs, check the electrical circuits for each symptom in the order given in the charts on the following pages and proceed to the page given for troubleshooting.

The Matrix Chart is divided into 3 chapters.

1. Chapter 1: Electronic Circuit Matrix Chart

- Refer to the table below when the trouble cause is considered to be electrical.
- If the instruction ”Proceed to next circuit inspection shown on matrix chart” is given in the flow chart of each circuit, proceed to the circuit with the next highest number in the table to continue the check.
- If the trouble still occurs even though there are no abnormalities in any of the other circuits, check and replace the ECM.

HINT:

*1: When the circuit on which mark *1 is attached is defective, DTC could be output (see page DI−1156).

Symptom	Suspect Area	See page
No up−shift (A particular gear, from 1st to 4th gear, is not up−shifted)	1. Shift solenoid valve (S1) circuit *1 2. Shift solenoid valve (S2) circuit *1 3. ECM	DI−1226 DI−1231 IN−30
No up−shift (4th → 5th)	1. O/D main switch circuit 2. Engine coolant temp. sensor circuit *1 3. Speed sensor NT circuit *1 4. Shift solenoid valve (SL1) circuit *1 5. Shift solenoid valve (SL2) circuit *1 6. Shift solenoid valve (SR) circuit *1 7. ECM	DI−1274 DI−477 DI−1175 DI−1188 DI−1216 DI−1236 IN−30
No up−shift (3rd → 4th)	1. Engine coolant temp. sensor circuit *1 2. Shift solenoid valve (S2) circuit *1 3. ECM	DI−477 DI−1231 IN−30
No up−shift (1st → 2nd)	1. Shift position L switch circuit *1 2. Shift solenoid valve (S2) circuit *1 3. ECM	DI−1277 DI−1231 IN−30
No down−shift (5th → 4th)	1. O/D main switch circuit 2. Shift solenoid valve (SL1) circuit *1 3. Shift solenoid valve (SL2) circuit *1 4. Shift solenoid valve (SR) circuit *1 5. ECM	DI−1274 DI−1188 DI−1216 DI−1236 IN−30
No down−shift (2nd → 1st)	1. Shift position L switch circuit 2. Shift solenoid valve (S2) circuit *1 3. ECM	DI−1277 DI−1231 IN−30
No down−shift (A particular gear, from 1st to 4th gear, is not down−shifted)	1. Shift solenoid valve (S1) circuit *1 2. Shift solenoid valve (S2) circuit *1 3. ECM	DI−1226 DI−1231 IN−30
No lock−up	1. ATF temperature sensor circuit *1 2. Stop light switch circuit *1 3. Speed sensor NT circuit *1 4. Shift solenoid valve (SLU) circuit *1 5. Engine coolant temp. sensor circuit *1 6. ECM	DI−1166 DI−1184 DI−1175 DI−1265 DI−477 IN−30
No lock−up off	1. Shift solenoid valve (SLU) circuit *1 2. ECM	DI−1265 IN−30

Shift point too high or too low	1. Shift solenoid valve (SLT) circuit *1 2. Speed sensor NT circuit *1 3. Speed sensor SP2 circuit *1 4. Throttle position sensor circuit *1 5. ATF temperature sensor circuit *1 7. ECM	DI–1247 DI–1175 DI–1180 DI–477 DI–1166 IN–30
Up–shift to 5th from 4th while shift lever is in 4 position	1. O/D main switch circuit 2. ECM	DI–1274 IN–30
Up–shift to 5th from 4th while engine is cold	1. Engine coolant temp. sensor circuit *1 2. ECM	DI–477 IN–30
Up–shift to 4th from 3rd while shift lever is in 3 position	1. Park/neutral position switch circuit *1 2. ECM	DI–1159 IN–30
Up–shift to 3rd from 2nd while shift lever is in 2 position	1. Park/neutral position switch circuit *1 2. ECM	DI–1159 IN–30
Up–shift to 2nd from 1st while shift lever is in L position	1. Shift position L switch circuit 2. ECM	DI–1277 IN–30
Harsh engagement (N → D)	1. Speed sensor NT circuit *1 2. Shift solenoid valve (SL1) circuit *1 3. Shift solenoid valve (SLT) circuit *1 4. ECM	DI–1175 DI–1188 DI–1247 IN–30
Harsh engagement (Lock–up)	1. Speed sensor NT circuit *1 2. Speed sensor SP2 circuit *1 3. Shift solenoid valve (SLU) circuit *1 4. ECM	DI–1175 DI–1180 DI–1265 IN–30
Harsh engagement (Any driving position)	ECM	IN–30
Poor acceleration	1. ATF temperature sensor No.2 circuit *1 2. Engine coolant temp. sensor circuit *1 3. Shift solenoid valve (SLT) circuit *1 4. ECM	DI–1251 DI–477 DI–1247 IN–30
No engine braking	ECM	IN–30
No kick–down	ECM	IN–30
Engine stalls when starting off or stopping	1. Shift solenoid valve (SLU) circuit *1 2. ECM	DI–1265 IN–30
AT Oil Temp. warning light remains on	1. ATF temperature sensor No.2 circuit *1 2. Engine coolant temp. sensor circuit *1 3. ECM	DI–1251 DI–477 IN–30
Lock–up at 3rd gear		
Shift point too high		
Malfunction in shifting	1. Park/neutral position switch circuit *1 2. ECM	DI–1159 IN–30

Chapter 2: On−Vehicle Repair
(★: A750E, A750F AUTOMATIC TRANSMISSION Repair Manual Pub. No. RM999U)

Symptom	Suspect Area	See page
Vehicle does not move with shift lever in any forward position and reverse position	1. Transmission control cable 2. Manual valve 3. Parking lock pawl 4. Off−vehicle repair matrix chart	DI−1117 ★ ★ −
Vehicle does not move with shift lever in R position	1. Valve body assy 2. Off−vehicle repair matrix chart	AT−12 −
No up−shift (1st → 2nd)	1. Valve body assy 2. Off−vehicle repair matrix chart	AT−12 −
No up−shift (2nd → 3rd)	1. Valve body assy 2. Off−vehicle repair matrix chart	AT−12 −
No up−shift (3rd → 4th)	1. Valve body assy 2. Off−vehicle repair matrix chart	AT−12 −
No up−shift (4th → 5th)	1. Valve body assy 2. Off−vehicle repair matrix chart	AT−12 −
No down−shift (5th → 4th)	1. Valve body assy 2. Off−vehicle repair matrix chart	AT−12 −
No down−shift (4th → 3rd)	1. Valve body assy 2. Off−vehicle repair matrix chart	AT−12 −
No down−shift (3rd → 2nd)	1. Valve body assy 2. Off−vehicle repair matrix chart	AT−12 −
No down−shift (2nd → 1st)	1. Valve body assy 2. Off−vehicle repair matrix chart	AT−12 −
No lock−up or No lock−up off	1. Shift solenoid valve (SLU) 2. Valve body assy 3. Off−vehicle repair matrix chart	DI−1257 AT−12 −
Harsh engagement (N → D)	1. Shift solenoid valve (SL1) 2. Valve body assy 3. C_1 accumulator 4. Off−vehicle repair matrix chart	DI−1205 AT−12 ★ −
Harsh engagement (Lock−up)	1. Shift solenoid valve (SLU) 2. Valve body assy 3. Off−vehicle repair matrix chart	DI−1257 AT−12 −
Harsh engagement (N → R)	1. Shift solenoid valve (SLT) 2. Shift solenoid valve (SLU) 3. Valve body assy 4. C_3 accumulator 5. Off−vehicle repair matrix chart	DI−1241 DI−1257 AT−12 ★ −
Harsh engagement (1st →2nd → 3rd → 4th → 5th)	1. Shift solenoid valve (SLT) 2. Shift solenoid valve (SL1) 3. Valve body assy	DI−1241 DI−1205 AT−12
Harsh engagement (1st → 2nd)	1. Valve body assy 2. B_3 accumulator 3. Off−vehicle repair matrix chart	AT−12 ★ −
Harsh engagement (2nd → 3rd)	1. Valve body assy 2. C_3 accumulator 3. Off−vehicle repair matrix chart	AT−12 ★ −
Harsh engagement (3rd → 4th)	1. Valve body assy 2. C_2 accumulator 3. Off−vehicle repair matrix chart	AT−12 ★ −

Harsh engagement (4th → 5th)	1. Shift solenoid valve (SL1) 2. Shift solenoid valve (SL2) 3. Valve body assy 4. Off–vehicle repair matrix chart	DI–1205 DI–1210 AT–12 –
Harsh engagement (5th → 4th)	1. Shift solenoid valve (SL1) 2. Shift solenoid valve (SL2) 3. Valve body assy 4. Off–vehicle repair matrix chart	DI–1205 DI–1210 AT–12 –
Slip or shudder (Forward and reverse)	1. Transmission control cable 2. Valve body assy 3. Oil strainer 4. Off–vehicle repair matrix chart	DI–1117 AT–12 AT–12 –
No engine braking (1st: L position)	1. Valve body assy 2. Off–vehicle repair matrix chart	AT–12 –
No engine braking (2nd: 2 position)	1. Valve body assy 2. Off–vehicle repair matrix chart	AT–12 –
No kick–down	Valve body assy	AT–12
Shift point too high or too low	1. Shift solenoid valve (SLT) 2. Shift solenoid valve (SL1) 3. Valve body assy	DI–1241 DI–1205 AT–12
Poor acceleration	1. Shift solenoid valve (SLT) 2. Valve body assy	DI–1241 AT–12
Engine stalls when starting off or stopping	1. Shift solenoid valve (SLU) 2. Valve body assy	DI–1257 AT–12

Chapter 3: Off−Vehicle Repair
(★: A750E, A750F AUTOMATIC TRANSMISSION Repair Manual Pub. No. RM999U)

Symptom	Suspect Area	See page
Vehicle does not move with shift lever in any forward position and reverse position	1. Rear planetary gear unit 2. Torque converter clutch	★ AT−39
Vehicle does not move with shift lever in R position	1. Brake No. 4 (B_4) 2. Clutch No. 3 (C_3) 3. One−way clutch No.4 (F_1)	★ ★ ★
No up−shift (1st → 2nd)	1. Brake No. 3 (B_3) 2. One−way clutch No.1 (F_1) 3. One−way clutch No. 2 (F_2)	★ ★ ★
No up−shift (2nd → 3rd)	Clutch No. 3 (C_3)	★
No up−shift (3rd → 4th)	Clutch No. 2 (C_2)	★
No up−shift (4th → 5th)	1. Brake No. 1 (B_1) 2. Clutch No. 1 (C_1)	★ ★
No lock−up or No lock−up off	Torque converter clutch	AT−39
Harsh engagement (N → D)	1. Clutch No. 1 (C_1) 2. One−way clutch No.3 (F_3)	★ ★
Harsh engagement (N → R)	1. Clutch No. 3 (C_3) 2. Brake No. 4 (B_4) 3. One−way clutch No.1 (F_1)	★ ★ ★
Harsh engagement (1 → 2)	1. Brake No. 3 (B_3) 2. One−way clutch No.1 (F_1) 3. One−way clutch No. 2 (F_2)	★ ★ ★
Harsh engagement (2 → 3)	Clutch No. 3 (C_3)	★
Harsh engagement (3 → 4)	Clutch No. 2 (C_2)	★
Harsh engagement (4 → 5th)	1. Brake No. 1 (B_1) 2. Clutch No. 1 (C_1)	★ ★
Harsh engagement (Lock−up)	Torque converter clutch	AT−39
Slip or shudder (Forward and reverse: After warm−up)	1. One−way clutch No.1 (F_1) 2. Clutch No. 3 (C_3) 3. Torque converter clutch clutch	★ ★ ★
Slip or shudder (Particular position: Just after engine starts)	Torque converter clutch	AT−39
Slip or shudder (R position)	1. Brake No. 4 (B_4) 2. One−way clutch No.1 (F_1) 3. Clutch No. 3 (C_3)	★ ★ ★
Slip or shudder (1st)	1. Clutch No. 1 (C_1) 2. One−way clutch No.3 (F_3)	★ ★
Slip or shudder (2nd)	1. Clutch No. 1 (C_1) 2. Brake No. 3 (B_3) 3. One−way clutch No.1 (F_1) 4. One−way clutch No.2 (F_2)	★ ★ ★ ★
Slip or shudder (3rd)	1. Clutch No. 1 (C_1) 2. Clutch No. 3 (C_3) 3. One−way clutch No.1 (F_1)	★ ★ ★
Slip or shudder (4th)	1. Clutch No. 1 (C_1) 2. Clutch No. 2 (C_2)	★ ★
Slip or shudder (5th)	1. Clutch No. 2 (C_2) 2. Clutch No. 3 (C_3) 3. Brake No. 1 (B_1)	★ ★ ★
No engine braking (1st – 4th: D position)	Clutch No. 1 (C_1)	★

No engine braking (1st: L position)	Brake No. 4 (B_4)	★
No engine braking (2nd: 2 position)	Brake No. 2 (B_2)	★
No engine braking (3rd: 3 position)	Brake No. 1 (B_1)	★
Poor acceleration (All positions)	Torque converter clutch	AT−39
Poor acceleration (5th)	1. Clutch No. 1 (C_1) 2. Clutch No. 3 (C_3) 3. Brake No. 1 (B_1) 4. Front planetary gear unit	★ ★ ★ ★
Engine stalls when starting off or stopping	Torque converter clutch	AT−39

DIDW4−01

ROAD TEST

1. PROBLEM SYMPTOM CONFIRMATION

Based on the result of the customer problem analysis, try to reproduce the symptoms. If the problem is that the transaxle does not shift up, shift down, or the shift point is too high or too low, conduct the following road test referring to the automatic shift schedule and simulate the problem symptoms.

2. ROAD TEST

NOTICE:

Perform the test at the normal operating ATF (Automatic Transmission Fluid) temperature: 50 to 80°C (122 to 176°F).

(a) D position test:

Shift into the D position and fully depress the accelerator pedal and check the following points.

(1) Check up−shift operation.

Check that 1 → 2, 2 → 3, 3 → 4 and 4 → 5th up−shifts take place, and that the shift points conform to the automatic shift schedule (See page SS−50).

HINT:

5th Gear Up−shift Prohibition Control

- Engine coolant temperature is 55 °C (131 °F) or less and vehicle speed is at 51 km/h (32 mph) or less.

4th Gear Up−shift Prohibition Control

- Engine coolant temperature is 40 °C (104 °F) or less and vehicle speed is at 45 km/h (28 mph) or less.

5th Gear Lock−up Prohibition Control

- Brake pedal is depressed.
- Accelerator pedal is released.
- Engine coolant temperature is 60 °C (140 °F) or less.

(2) Check for shift shock and slip.

Check for shock and slip at the 1 → 2, 2 → 3, 3 → 4 and 4 → 5th up−shifts.

(3) Check for abnormal noise and vibration.

Check for abnormal noise and vibration when up−shifting from 1 → 2, 2 → 3, 3 → 4 and 4 → 5 while driving with the shift lever in the D position, and check while driving in the lock−up condition.

HINT:

The check for the cause of abnormal noise and vibration must be done thoroughly as it could also be due to loss of balance in the differential, torque converter clutch, etc.

(4) Check kick−down operation.

Check vehicle speeds when the 2nd to 1st, 3rd to 2nd, 4th to 3rd, and 5th to 4th kick−downs take place while driving with the shift lever in the D position. Confirm that each speed is within the applicable vehicle speed range indicated in the automatic shift schedule (See page SS−50).

(5) Check abnormal shock and slip at kick−down.

(6) Check the lock−up mechanism.

- Drive in the D position (5th gear), at a steady speed (lock−up ON).
- Lightly depress the accelerator pedal and check that the engine speed does not change abruptly.

HINT:

If there is a big jump in engine speed, there is no lock−up.

(b) 4 (O/D OFF) position test:
Shift into the 4 (O/D OFF) position and fully depress the accelerator pedal and check the following points.
(1) Check up−shift operation.
Check that the 1 → 2, 2 → 3 and 3 → 4 up−shifts take place and that the shift point conforms to the automatic shift schedule (See page SS−50).

HINT:
- There is no 5th up−shift in the 4 position.
- 4th Gear Lock−up Prohibition Control
  - Brake pedal is depressed.
  - Accelerator pedal is released.
  - Engine coolant temperature is 60 °C (140 °F) or less.

(2) Check engine braking.
While driving in the 4 position and 4th gear, release the accelerator pedal and check the engine braking effect.
(3) Check for abnormal noises during acceleration and deceleration, and for shock at up−shift and down−shift.
(4) Check the lock−up mechanism.
- Drive in 4 position 4th gear, at a steady speed (lock−up ON).
- Lightly depress the accelerator pedal and check that the engine speed does not change abruptly.

HINT:
If there is a big jump in engine speed, there is no lock−up.

(c) 3 position test:
Shift into the 3 position and fully depress the accelerator pedal and check the following points.
(1) Check up−shift operation.
Check that the 1 → 2 and 2 → 3 up−shifts takes place and that the shift point conforms to the automatic shift schedule (See page SS−50).

HINT:
- There is no 4th up−shift and lock−up in the 3 position.
- When the 2nd start switch is ON, there is no 1 → 2 up−shift and 2 → 1 down−shift.

(2) Check engine braking.
While running in the 3 position and 3rd gear, release the accelerator pedal and check the engine braking effect.
(3) Check for abnormal noises during acceleration and deceleration, and for shock at up−shift and down−shift.

(d) 2 position test:
Shift into the 2 position and fully depress the accelerator pedal and check the following points.
(1) Check up−shift operation.
Check that the 1 → 2 up−shift takes place and that the shift point conforms to the automatic shift schedule (See page SS−50).

HINT:
- There is no 3rd up−shift and lock−up in the 2 position.
- When the 2nd start switch is ON, there is no 1 → 2 up−shift and 2 → 1 down−shift.

(2) Check engine braking.
While running in the 2 position and 2nd gear, release the accelerator pedal and check the engine braking effect.
(3) Check for abnormal noises during acceleration and deceleration, and for shock at up−shift and down−shift.

(e) L position test:
Shift into the L position and fully depress the accelerator pedal and check the following points.
(1) Check no up−shift.
While running in the L position, check that there is no up−shift to 2nd gear.
(2) Check engine braking.
While running in the L position, release the accelerator pedal and check the engine braking effect.
(3) Check for abnormal noises during acceleration and deceleration.

(f) R position test:
Shift into the R position, lightly depress the accelerator pedal, and check that the vehicle moves backward without any abnormal noise or vibration.

CAUTION:
Before conducting this test, ensure that the test area is free from people and obstruction.

(g) P position test:
Stop the vehicle on a grade (more than 5°) and after shifting into the P position, release the parking brake. Then, check that the parking lock pawl holds the vehicle in place.

DIDW0−01

SYSTEM DESCRIPTION

SYSTEM DESCRIPTION

The ECT (Electronic controlled automatic transmission) is an automatic transmission that electronically controls shift timing using the ECM. The ECM detects electrical signals that indicate engine and driving conditions, and controls the shift point, based on driver habits and road conditions. As a result, fuel efficiency and power transmission performance are improved.

Shift shock has been reduced by controlling the engine and transmission simultaneously.

In addition, the ECT has features such as follows:

- Diagnostic function.
- Fail−safe function when a malfunction occurs.

DIDVZ–01

SYSTEM DIAGRAM

The configuration of the electronic control system in the A750E/A750F automatic transmission is as shown in the following chart.

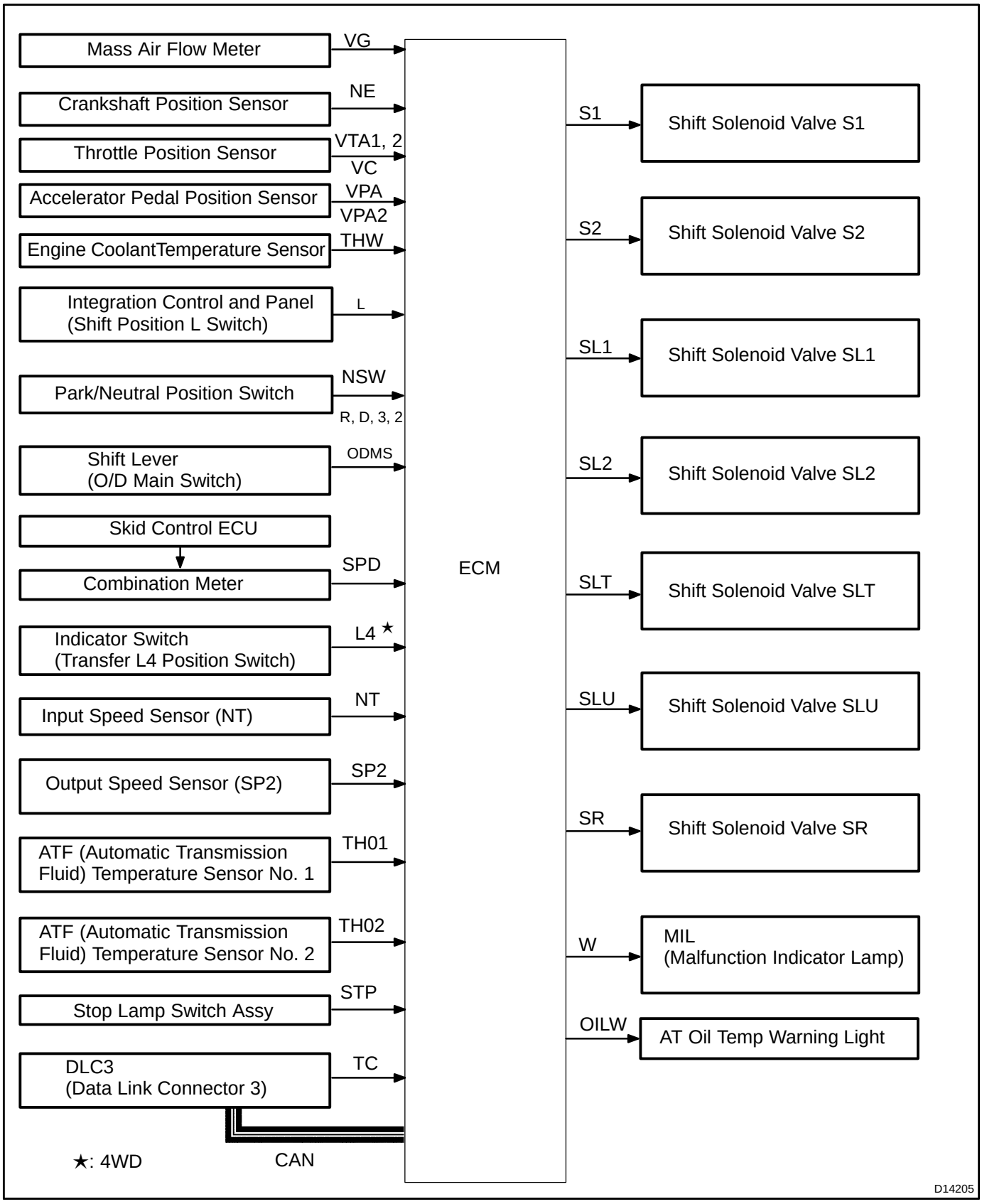

DIDWC−01

TERMINALS OF ECM

1. ECM

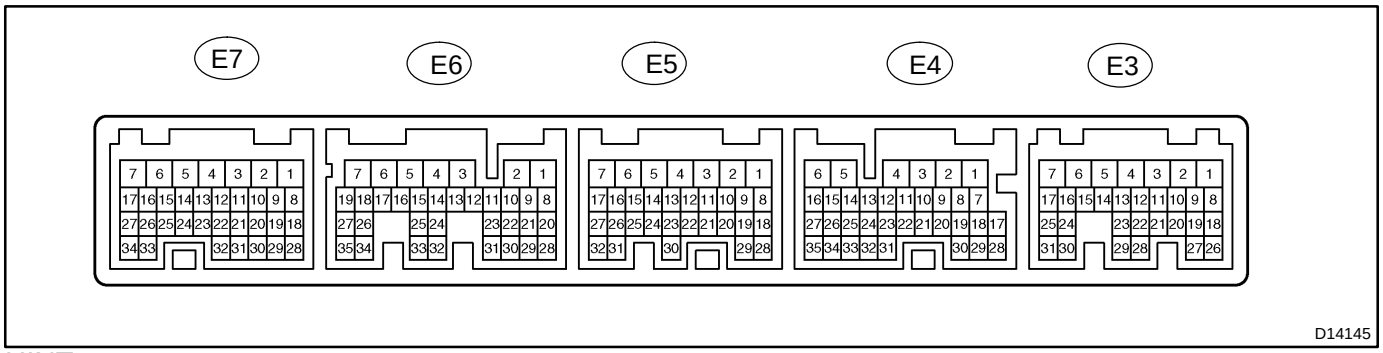

HINT:

Each ECM terminal's standard voltage is shown in the table below.

In the table, first follow the information under "Condition". Look under "Symbols (Terminal No.)" for the terminals to be inspected. The standard voltage between the terminals is shown under "Specific Condition".

Use the illustration above as a reference for the ECM terminals.

Symbols (Terminals No.)	Wiring Color	Terminal Description	Condition	Specified Condition
LMS (E4−9) − E1 (E5−1)	V−W − BR	L shift position switch signal	IG switch ON	10 to 14 V
↑	↑	↑	IG switch ON and Press continuously shift position L switch	Below 1 V
2 (E4−10) − E1 (E5−1)	P−L*1 − BR L*2 − BR	2 shift position switch signal	IG switch ON and shift lever 2 and L position	10 to 14 V
↑	↑	↑	IG switch ON and shift lever except 2 and L position	Below 1 V
R (E4−11) − E1 (E5−1)	G−R*1 − BR R−B*2 − BR	R shift position switch signal	IG switch ON and shift lever R position	10 to 14 V
↑	↑	↑	IG switch ON and shift lever except R position	Below 1 V
D (E4−21) − E1 (E5−1)	W−R − BR	D shift position switch signal	IG switch ON and shift lever D position	10 to 14 V
↑	↑	↑	IG switch ON and shift lever except D position	Below 1 V
3 (E4−19) − E1 (E5−1)	G−W*1 − BR L−W*2 − BR	3 shift position switch signal	IG switch ON and shift lever 3 position	10 to 14 V
↑	↑	↑	IG switch ON and shift lever except 3 position	Below 1 V
ODMS (E3−12) − E1 (E5−1)	R*1 − BR B*2 − BR	O/D main switch signal	IG switch ON	10 to 14 V
↑	↑	↑	IG switch ON and press continuously O/D main switch	Below 1 V
STP (E3−15) − E1 (E5−1)	G−W − BR	Stop lamp switch signal	Brake pedal is depressed	7.5 to 14 V
↑	↑	↑	Brake pedal is released	Below 1.5 V
SLU+ (E6−15) − SLU− (E6−14)	G − L−B	SLU solenoid signal	5th (lock−up) gear	Pulse generation (See waveform 2)
S2 (E6−10) − E1 (E5−1)	W−L − BR	S2 solenoid signal	2nd or 3rd gear	10 to 14 V
↑	↑	↑	1st, 4th or 5th gear	Below 1 V
S1 (E6−11) − E1 (E5−1)	L − BR	S1 solenoid signal	1st or 2nd gear	10 to 14 V
↑	↑	↑	3rd, 4th or 5th gear	Below 1 V

SLT+ (E6−13) − SLT− (E6−12)	B−R − G−W	SLT solenoid signal	Engine idle speed	Pulse generation (See waveform 1)
SR (E6−9) − E1 (E5−1)	W−G − BR	SR solenoid signal	5th gear	10 to 14 V
↑	↑	↑	1st gear	Below 1 V
SL2+ (E6−17) − SL2− (E6−16)	B − W	SL2 solenoid signal	Engine idle speed	Pulse generation (See waveform 3)
SL1+ (E6−19) − SL1− (E6−18)	R−W − GR	SL1 solenoid signal	Engine idle speed	Pulse generation (See waveform 4)
THO1 (E6−24) − E2 (E7−28)	R−L − B−W	No.1 ATF temperature sensor signal	No.1 ATF temperature: 115 °C (239 °F) or more	Below 1.5 V
THO2 (E6−32) − E2 (E7−28)	V − B−W	No.2 ATF temperature sensor signal	No.2 ATF temperature: 115 °C (239 °F) or more	Below 1.5 V
SP2+ (E6−34) − SP2− (E6−26)	Y−R − W−R	Speed sensor (SP2) signal	Vehicle speed 20 km/h (12 mph)	Pulse generation (See waveform 6)
NT+ (E6−35) − NT− (E6−27)	G − R	Speed sensor (NT) signal	Engine idle speed	Pulse generation (See waveform 5)
STAR/NSW (E6−8) − E1 (E5−1)	L−R − BR	Park neutral switch signal	IG switch ON and shift lever P and N position	Below 2 V
↑	↑	↑	IG switch ON and shift lever except P and N position	10 to 14 V
L4* (E5−13) − E1 (E6−1)	L−R − BR	Transfer L position switch signal	IG switch ON and transfer L position	Below 1 V
↑	↑	↑	IG switch ON and transfer except L position	10 to 14 V

HINT:
*: 4WD
*1: Except Double Cab
*2: Double Cab

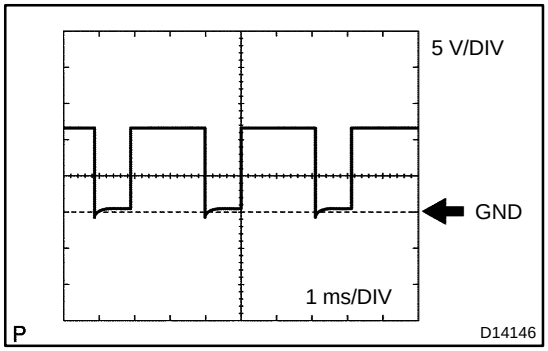

Waveform 1

Reference:

Terminal	SLT+ − SLT−
Tool setting	5V/DIV, 1ms/DIV
Vehicle condition	Engine idle speed

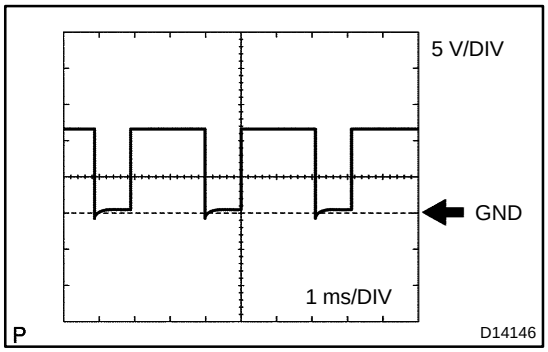

Waveform 2

Reference:

Terminal	SLU+ − SLU−
Tool setting	5V/DIV, 1ms/DIV
Vehicle condition	5th (lock−up) or 6th (lock−up) gear

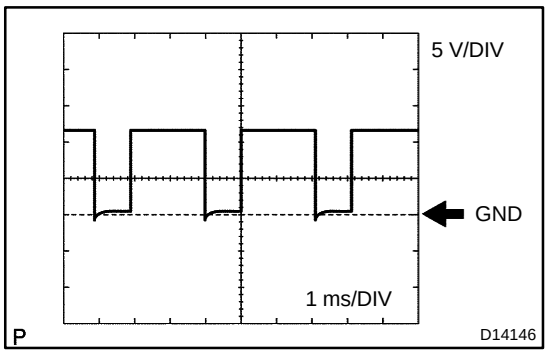

Waveform 3

Reference:

Terminal	SL2+ − SL2−
Tool setting	5V/DIV, 1ms/DIV
Vehicle condition	Engine idle speed

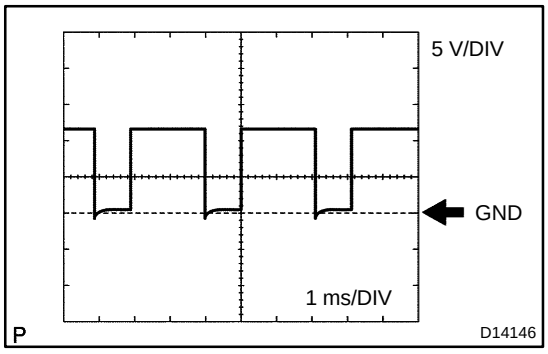

Waveform 4

Reference:

Terminal	SL1+ − SL1−
Tool setting	5V/DIV, 1ms/DIV
Vehicle condition	Engine idle speed

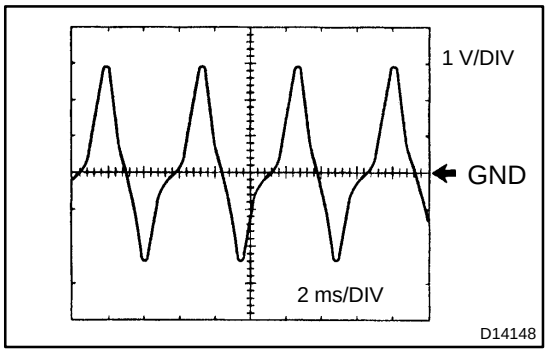

Waveform 5

Reference:

Terminal	NT+ − NT−
Tool setting	1V/DIV, 2ms/DIV
Vehicle condition	Engine idle speed (P or N position)

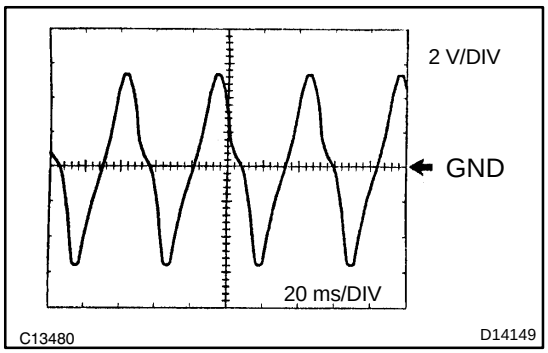

Waveform 6

Reference:

Terminal	SP2+ − SP2−
Tool setting	2V/DIV, 20ms/DIV
Vehicle condition	Vehicle speed 20 km/h (12 mph)

DIDVX−01

TOYOTA PART AND SYSTEM NAME LIST

This reference list indicates the part names used in this manual along with their definitions.

Part and system name	Definition
Toyota HCAC system, Hydrocarbon adsorptive Catalyst (HCAC) system, HC adsorptive three−way catalyst	HC adsorptive three−way catalytic converter
Variable Valve Timing sensor, VVT sensor	Camshaft position sensor
Variable valve timing system, VVT system	Camshaft timing control system
Camshaft timing oil control valve, Oil control valve OCV, VVT, VSV	Camshaft timing oil control valve
Variable timing and lift, VVTL	Camshaft timing and lift control
Crankshaft position sensor ”A”	Crankshaft position sensor
Engine speed sensor	Crankshaft position sensor
THA	Intake air temperature
Knock control module	Engine knock control module
Knock sensor	Engine knock sensor
Mass or volume air flow circuit	Mass air flow sensor circuit
Vacuum sensor	Manifold air pressure sensor
Internal control module, Control module, Engine control ECU, PCM	Power train control module
FC idle	Deceleration fuel cut
Idle air control valve	Idle speed control
VSV for CCV, Canister close valve VSV for canister control	Evaporative emissions canister vent valve
VSV for EVAP, Vacuum switching valve assembly No. 1, EVAP VAV, Purge VSV	Evaporative emissions canister purge valve
VSV for pressure switching valve, Bypass VSV	Evaporative emission pressure switching valve
Vapor pressure sensor, EVAP pressure sensor, Evaporative emission control system pressure sensor	Fuel tank pressure sensor
Charcoal canister	Evaporative emissions canister
ORVR system	On−board refueling vapor recovery system
Intake manifold runner control	Intake manifold tuning system
Intake manifold runner valve, IMRV, IACV (runner valve)	Intake manifold tuning valve
Intake control VSV	Intake manifold tuning solenoid valve
AFS	Air fuel ratio sensor
O2 sensor	Heater oxygen sensor
Oxygen sensor pumping current circuit	Oxygen sensor output signal
Oxygen sensor reference ground circuit	Oxygen sensor signal ground
Accel position sensor	Accelerator pedal position sensor
Throttle actuator control motor, Actuator control motor, Electronic throttle motor, Throttle control motor	Electronic throttle actuator
Electronic throttle control system, Throttle actuator control system	Electronic throttle control system
Throttle/pedal position sensor, Throttle/pedal position switch, Throttle position sensor/switch	Throttle position sensor
Turbo press sensor	Turbocharger pressure sensor
Turbo VSV	Turbocharger pressure control solenoid valve
P/S pressure switch	Power−steering pressure switch
VSV for ACM	Active control engine mount
Speed sensor, Vehicle speed sensor ”A”, Speed sensor for skid control ECU	Vehicle speed sensor
ATF temperature sensor, Trans. fluid temp. sensor, ATF temperature sensor ”A”	Transmission fluid temperature sensor
Electronic controlled automatic transmission, ECT	Electronically controlled automatic
Intermediate shaft speed sensor ”A”	Counter gear speed sensor

Output speed sensor	Output shaft speed sensor
Input speed sensor, Input turbine speed sensor ”A”, Speed sensor (NT), Turbine speed sensor	Input turbine speed sensor
PNP switch, NSW	Park/neutral position switch
Pressure control solenoid	Transmission pressure control solenoid
Shift solenoid	Transmission shift solenoid valve
Transmission control switch, Shift lock control unit	Shift lock control module
Engine immobilizer system, Immobilizer system	Vehicle anti−theft system

DIDUS−01

BASIC INSPECTION

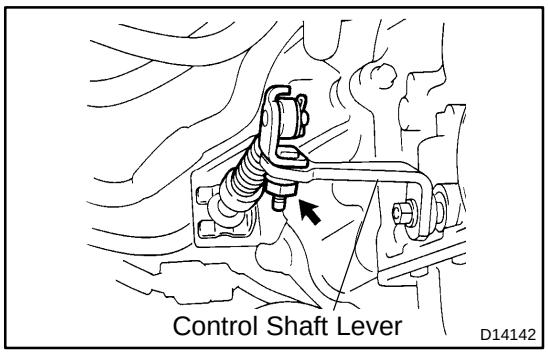

1. INSPECT AND ADJUST SHIFT LEVER POSITION

(a) When shifting the shift lever from the N position to other positions, check that the lever can be shifted smoothly and accurately to each position and that the position indicator comes on in accordance with the shift lever position.

If the indicator and shift lever position do not match, carry out the following adjustment procedures.

(1) Remove the nut and disconnect the shift control cable from the control shaft lever.
(2) Move the control shaft fully rearward.
(3) Return the control shaft lever 2 notches to the N position.
(4) Set the shift lever to the N position.
(5) Connect the shift control cable and temporarily install the control shaft lever nut.
(6) While holding the shift lever lightly toward the R position side, tighten the control shaft lever nut.

Torque: 14.5 N·m (148 kgf·cm, 11 ft·lbf)

(7) Start the engine and make sure that the vehicle moves forward when shifting the lever from the N to the D position and reverses when shifting it to the R position.

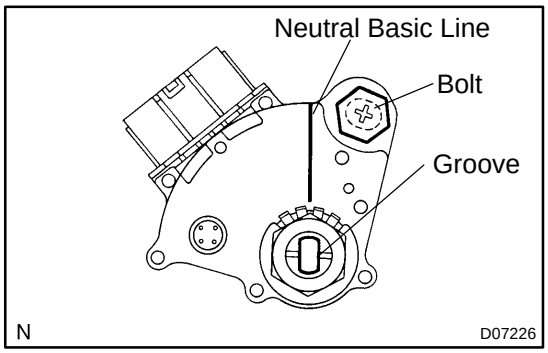

2. INSPECT AND ADJUST PARK/NEUTRAL POSITION

(a) Check that the engine can be started when the shift lever is in the N or P position, but cannot be started in other positions.

If operation cannot be done as stated above, carry out the following adjustment procedures.

- Loosen the park/neutral position switch bolt and set the shift lever to the N position.
- Align the groove with the neutral basic line.
- Hold in position and tighten the bolt.

Torque: 13 N·m (130 kgf·cm, 9 ft·lbf)

(b) For continuity inspection of the park/neutral position switch, see page DI−993.

3. CHECK IDLE SPEED

Idle speed (In N position and air conditioner OFF): 700 ± 50 rpm

DIDVT−01

O/D Main Switch Circuit

CIRCUIT DESCRIPTION

The O/D main switch (transmission control switch) is a momentary type switch. When pressing the O/D main switch once, the O/D OFF indicator light comes on and the ECM prohibits shifting into O/D. When pressing it once again, the O/D OFF indicator light goes off and the ECM allows shifting into O/D. Turning the IG switch OFF will reset the O/D OFF indicator light.

WIRING DIAGRAM

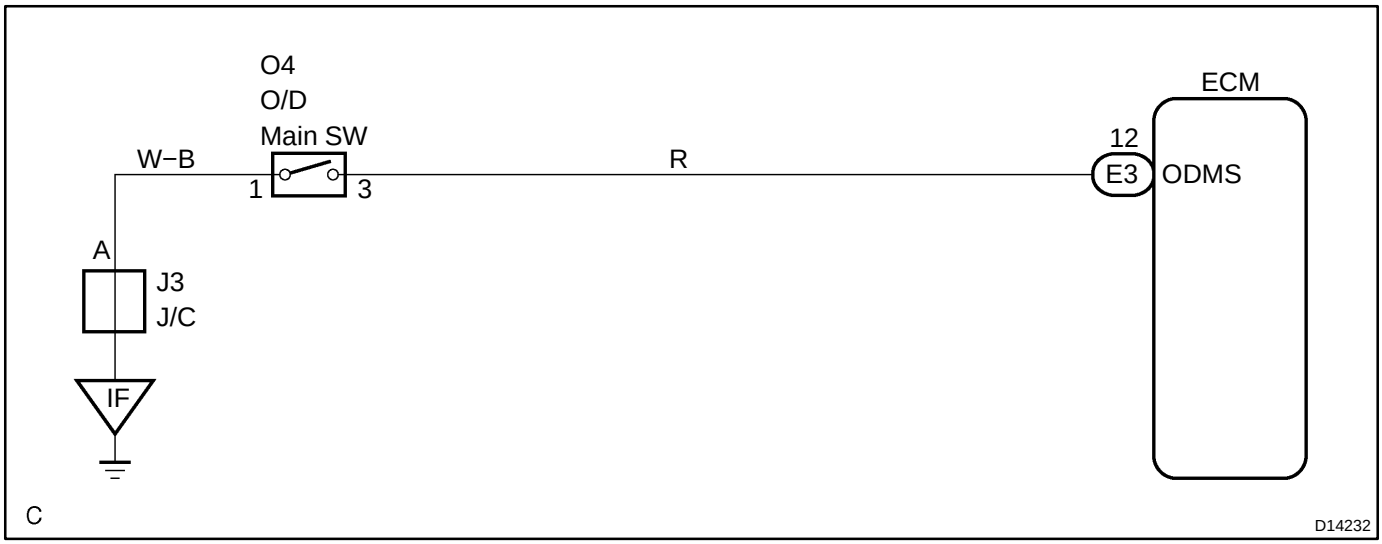

INSPECTION PROCEDURE

1	Check harness and connector (O/D main switch − body ground)

Wire Harness Side:
(Connector Front View):

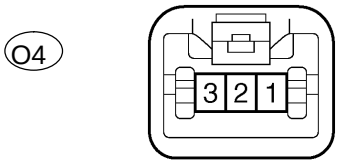

PREPARATION:

Disconnect the O/D main switch connector.

CHECK:

Measure the resistance according to the value(s) in the table below.

OK:

Tester Connection	Specified Condition
1 − Body ground	Below 1 Ω

NG → **Repair or replace the harness or connector (See page IN−30).**

OK

2	Inspect O/D main switch.

Switch Side:
(Connector Front View):

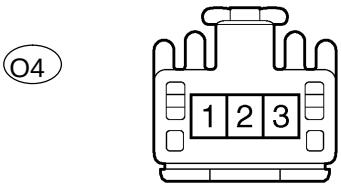

CHECK:

Measure the resistance according to the value(s) in the table below.

OK:

Switch Condition	Tester Connection	Specified Condition
O/D main switch pressed and held	1 − 3	Below 1 Ω
O/D main switch released	↑	10 kΩ or higher

NG → **Replace O/D main switch (See page AT−19).**

OK

3	Check harness and connector (O/D main switch − ECM).

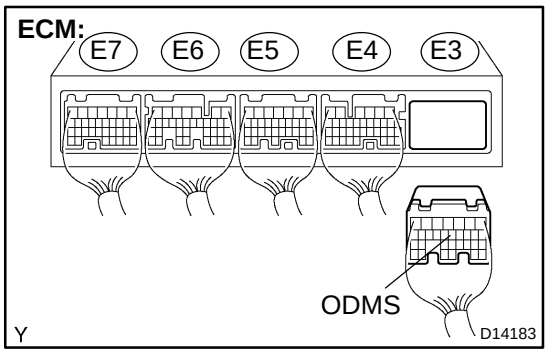

PREPARATION:

(a) Connect the O/D main switch connector.

(b) Disconnect the connector from the ECM.

CHECK:

Measure the resistance according to the value(s) in the table below.

OK:

Switch Condition	Tester Connection	Specified Condition
O/D main switch pressed and held	E3 − 12 (ODMS) − Body ground	Below 1 Ω
O/D main switch released	↑	10 kΩ or higher

NG → **Repair or replace the harness or connector (See page IN−30).**

OK →

Proceed to next circuit inspection shown on matrix chart (See page DI−971).

DTC	P2714	Pressure Control Solenoid ”D” Performance (Shift Solenoid Valve SLT)

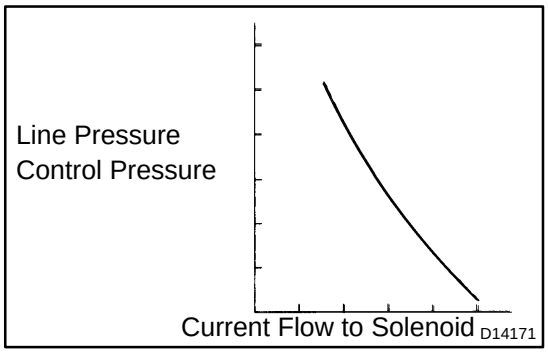

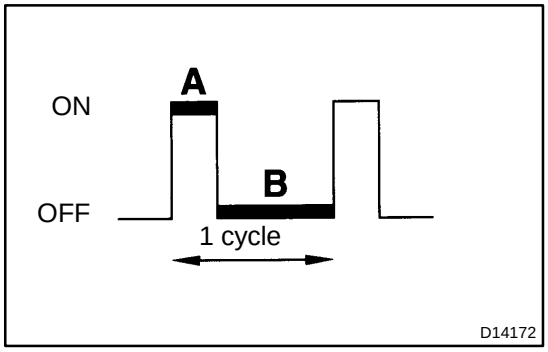

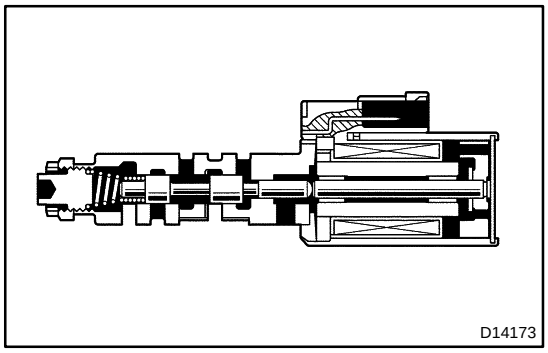

SYSTEM DESCRIPTION

The linear solenoid valve (SLT) controls the transmission line pressure for smooth transmission operation based on signals from the throttle position sensor and the vehicle speed sensor. The ECM adjusts the duty cycle of the SLT solenoid valve to control hydraulic line pressure coming from the primary regulator valve. Appropriate line pressure assures smooth shifting with varying engine outputs.

(*): Duty Ratio

The duty ratio is the ratio of the period of continuity in one cycle. For example, if A is the period of continuity in one cycle, and B is the period of non−continuity, then

Duty Ratio = A/(A + B) x 100 (%)

DTC No.	DTC Detection Condition	Trouble Area
P2714	ECM detects a malfunction on SLT (ON side) according to the revolution difference of the turbine and the output shaft, and also by the oil pressure. (2−trip detection logic)	• Shift solenoid valve SLT remains open or closed • Valve body is blocked • Automatic transmission (clutch, brake or gear, etc.)

MONITOR DESCRIPTION

The ECM calculates the amount of heat absorbed by the friction material based on the difference in revolution (clutch slippage) between the turbine and output shaft. The ECM turns on the MIL and outputs this DTC when the amount of heat absorption exceeds the specified value.

When the shift solenoid valve SLT remains on, oil pressure goes down and clutch engagement force decreases.

NOTE: If you continue driving under these conditions, the clutch will burn out and the vehicle will no longer be drivable.

MONITOR STRATEGY

Related DTCs	P2714	Shift solenoid valve SLT/ON malfunction
Required sensors/Components	Main	Shift solenoid valve SLT
	Sub	Valve body, ATF temperature sensor, Speed sensor (NT), Speed sensor (NO)
Frequency of operation	Continuous	
Duration	Immediate	
MIL operation	2 driving cycles	
Sequence of operation	None	

TYPICAL ENABLING CONDITIONS

Item	Specification	
	Minimum	Maximum
All:		
Turbine speed sensor circuit	Not circuit malfunction	
Output speed sensor circuit	Not circuit malfunction	
Transmission Fluid Temperature Sensor circuit	Not circuit malfunction	
Shift solenoid valve S1 circuit	Not circuit malfunction	
Shift solenoid valve S2 circuit	Not circuit malfunction	
Shift solenoid valve SR circuit	Not circuit malfunction	
Shift solenoid valve SL1 circuit	Not circuit malfunction	
Shift solenoid valve SL2 circuit	Not circuit malfunction	
Shift solenoid valve SLT circuit	Not circuit malfunction	
ECT (Engine coolant temperature) sensor circuit	Not circuit malfunction	
KCS sensor circuit	Not circuit malfunction	
ETCS (Electric throttle control system)	Not system down	
Transmission range	”D”	
ECT	40˚C (104˚F) or more	−
Spark advance from Max. retard timing by KCS control	0˚ CA or more	−
Engine	Starting	
Transfer range	”HIGH”*1	
TFT (transmission fluid temperature)	10˚C (50˚F) or more	−
Transfer range ”HIGH” *1 (This condition is applied only 4WD)		
*1 Following conditions met		
Vehicle speed sensor circuit	Not circuit malfunction	
Output shaft speed sensor circuit	Not circuit malfunction	
Transfer output speed	143 rpm or more	−
NO/NOtf (Transfer input speed/Transfer output speed)	0.9 to 1.1	

TYPICAL MALFUNCTION THRESHOLDS

Detection criteria	Threshold
Summation of C1 clutch heat generations = ∑ (Turbine speed − Output speed x Temporary ratio)	Specified value

WIRING DIAGRAM

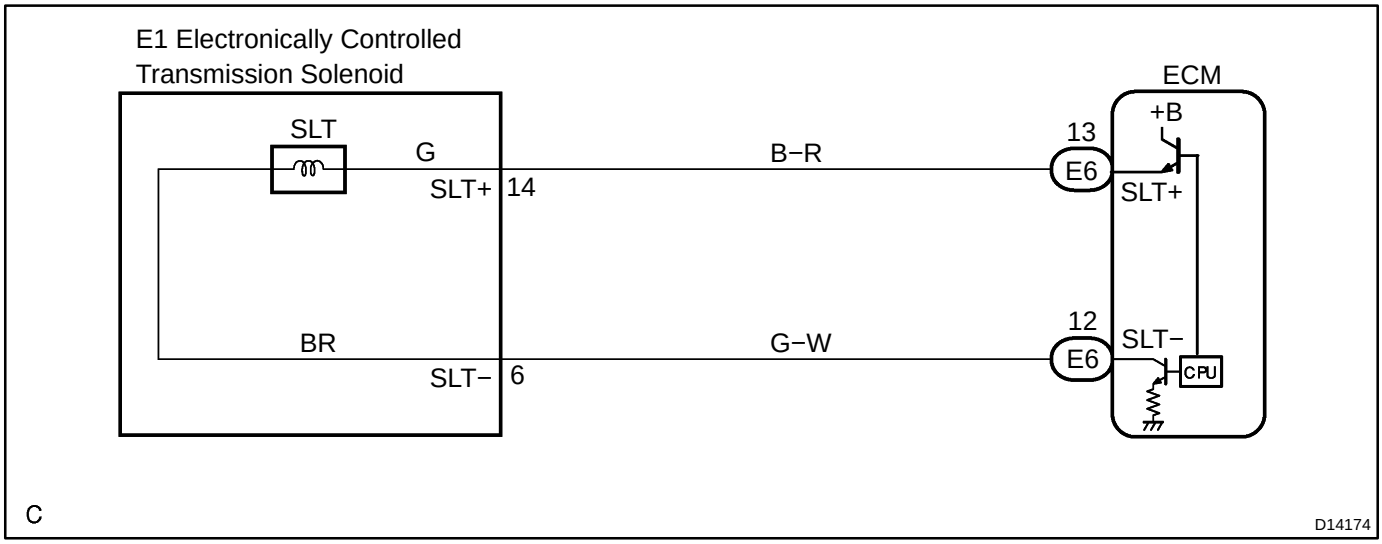

INSPECTION PROCEDURE

HINT:

Performing the ACTIVE TEST using the hand−held tester allows the relay, VSV, actuator and so on to operate without parts removal. Performing the ACTIVE TEST as the first step of troubleshooting is one method to shorten labor time.

It is possible to display the DATA LIST during the ACTIVE TEST.

(a) Warm up the engine.
(b) Turn the ignition switch off.
(c) Connect the hand−held tester to the DLC3.
(d) Turn the ignition switch to the ON position.
(e) Turn on the tester.
(f) Select the item ”DIAGNOSIS / ENHANCED OBD II / ACTIVE TEST”.
(g) According to the display on tester, perform the ”ACTIVE TEST”.

Item	Test Details	Diagnostic Note
LINE PRESS UP *	[Test Details] Operate the shift solenoid SLT and raise the line pressure. [Vehicle Condition] • Vehicle Stopped. • IDL: ON [HINT] OFF: Line pressure up (When the active test of ”Control the Line Pressure Up” is performed, the ECM commands the SLT solenoid to turn off). ON: No action (normal operation)	−

*: ”LINE PRESS UP” in the ACTIVE TEST is performed to check the line pressure changes by connecting the SST to the automatic transaxle, which is used in the HYDRAULIC TEST (See page DI−958) as well.

HINT:

- The pressure values in ACTIVE TEST and HYDRAULIC TEST are different from each other.
- Normally, the line pressure detected in the ACTIVE TEST is approximately half of the value detected in the HYDRAULIC TEST’s stall test.

1	**Check other DTCs output (in addition to DTC P2714).**

PREPARATION:

(a) Turn the ignition switch off.
(b) Connect the OBD II scan tool or hand−held tester to the DLC3.
(c) Turn the ignition switch to the ON position.
(d) Turn on the tester.
(e) Select the item ”DIAGNOSIS / ENHANCED OBD II / DTC INFO / CURRENT CODES”.

CHECK:

Read the DTCs using the OBD II scan tool or the hand−held tester.

RESULT:

Display (DTC output)	Proceed to
Only ”P2714” is output	A
”P2714” and other DTCs	B

HINT:

If any other codes besides ”P2714” are output, perform troubleshooting for those DTCs first.

B → **Go to DTC chart (See page DI−991).**

A

2	Inspect shift solenoid valve SLT operation.

Shift Solenoid Valve SLT:

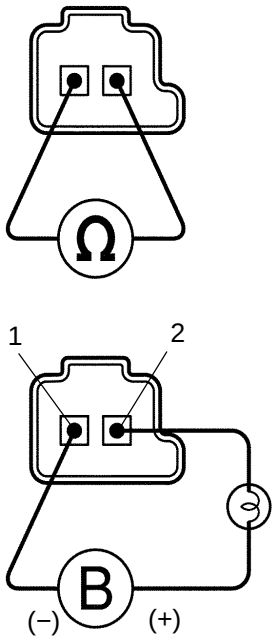

PREPARATION:

Remove the shift solenoid valve SLT (See page AT−12).

CHECK:

Measure the resistance according to the value(s) in the table below.

OK:

Tester Connection	Specified Condition 20°C (68°F)
1 − 2	5.0 to 5.6 Ω

CHECK:

Connect the positive (+) lead with a 21 W bulb to terminal 2 and the negative (−) lead to terminal 1 of the solenoid valve connector, then check the movement of the valve.

OK:

The solenoid makes an operating sound.

NG → **Replace the shift solenoid valve SLT (See page AT−12).**

OK

3	Inspect valve body (See page AT−12).

OK:

There are no foreign objects on each valve.

NG → **Repair or replace valve body.**

OK

Repair or replace transmission (See page AT−26).

DTC	P2716	Pressure Control Solenoid ”D” Electrical (Shift Solenoid Valve SLT)

CIRCUIT DESCRIPTION

See page DI−1073

DTC No.	DTC Detection Condition	Trouble Area
P2716	Open or short is detected in shift solenoid valve SLT circuit for 1 second or more while driving (1−trip detection logic).	• Open or short in shift solenoid valve SLT circuit • Shift solenoid valve SLT • ECM

MONITOR DESCRIPTION

When an open or short in the linear solenoid valve (SLT) circuit is detected, the ECM interprets this as a fault. The ECM will turn on the MIL and store the DTC.

MONITOR STRATEGY

Related DTCs	P2716	Shift solenoid valve SLT/Range check
Required sensors/Components	Shift solenoid valve SLT	
Frequency of operation	Continuous	
Duration	1 sec.	
MIL operation	Immediate	
Sequence of operation	None	

TYPICAL ENABLING CONDITIONS

Item	Specification	
	Minimum	Maximum
The monitor will run whenever this DTC is not present.	See page DI−963	
Case 1:		
Battery voltage	10 V or more	Less than 12 V
Ignition switch	ON	
CPU commanded duty	−	Less than 75%
Starter	OFF	
Case 2:		
Battery voltage	12 V or more	−
Ignition switch	ON	
Starter	OFF	

TYPICAL MALFUNCTION THRESHOLDS

Detection criteria	Threshold
Case 1:	
Output signal duty	100%
Case 2:	
Output signal duty	100%

COMPONENT OPERATING RANGE

Parameter	Standard value
Output signal duty	Less than 100%

WIRING DIAGRAM

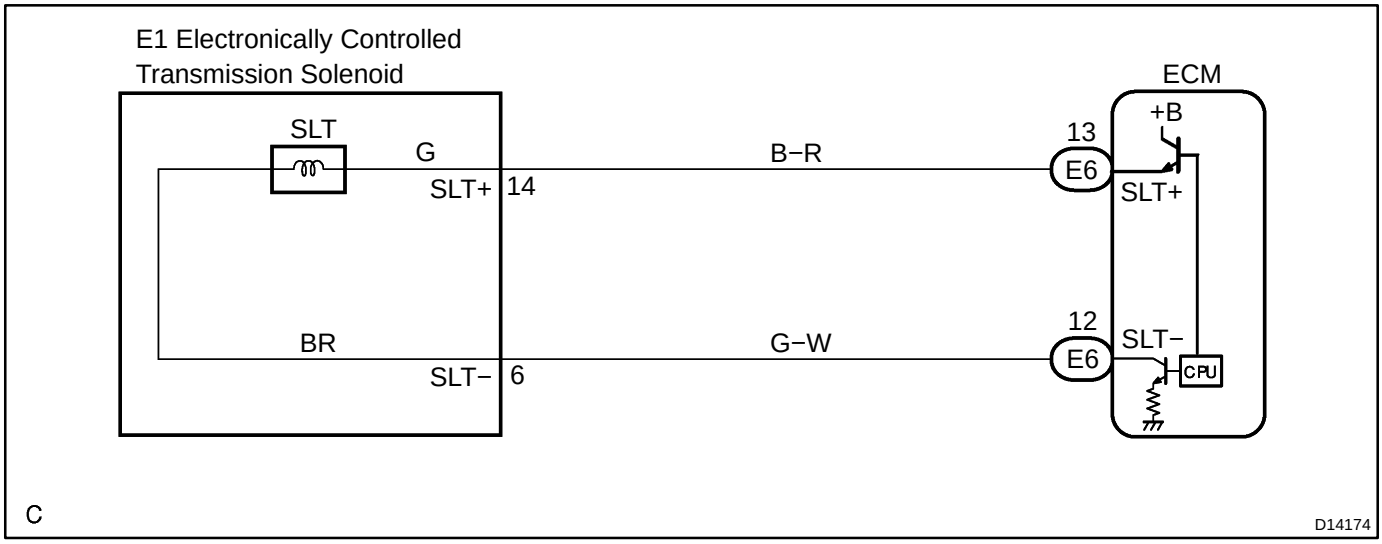

INSPECTION PROCEDURE

1	**Check transmission wire.**

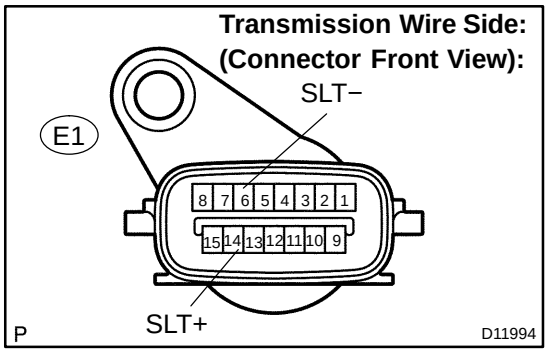

PREPARATION:

Disconnect the transmission wire connector.

CHECK:

Measure the resistance according to the value(s) in the table below.

OK:

Tester Connection	Specified Condition 20°C (68°F)
14 (SLT+) − 6 (SLT−)	5.0 to 5.6 Ω

CHECK:

Measure the resistance according to the value(s) in the table below.

OK:

Tester Connection	Specified Condition
14 (SLT+) − Body ground	10 kΩ or higher
6 (SLT−) − Body ground	↑

NG	**Go to step 3.**

OK

2	Check harness and connector (Transmission wire − ECM)

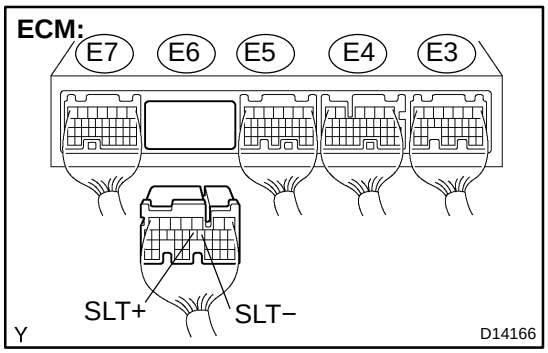

PREPARATION:

(a) Connect the transmission wire connector.

(b) Disconnect the ECM connector.

CHECK:

Measure the resistance according to the value(s) in the table below.

OK:

Tester Connection	Specified Condition 20°C (68°F)
E6 − 13 (SLT+) − E6 − 12 (SLT−)	5.0 to 5.6 Ω

CHECK:

Measure the resistance according to the value(s) in the table below.

OK:

Tester Connection	Specified Condition
E6 − 13 (SLT+) − Body ground	10 kΩ or higher
E6 − 12 (SLT−) − Body ground	↑

NG → **Repair or replace harness or connector (See page IN−30).**

OK →

Replace the ECM (See page SF−66).

3	Inspect shift solenoid valve SLT.

Shift Solenoid Valve SLT:

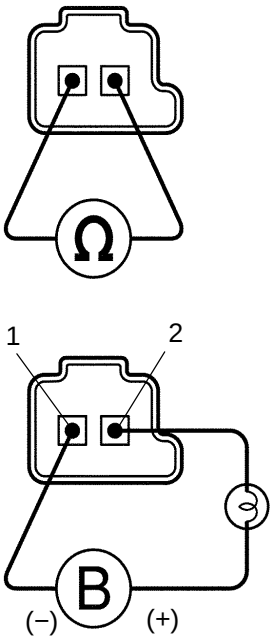

PREPARATION:

Remove the shift solenoid valve SLT (See page AT−12).

CHECK:

Measure the resistance according to the value(s) in the table below.

OK:

Tester Connection	Specified Condition 20°C (68°F)
1 − 2	5.0 to 5.6 Ω

CHECK:

Connect the positive (+) lead with a 21 W bulb to terminal 2 and the negative (−) lead to terminal 1 of the solenoid valve connector, then check the movement of the valve.

OK:

The solenoid makes an operating sound.

NG → **Replace the shift solenoid valve SLT (See page AT−12).**

OK

Repair or replace the transmission wire (See page AT−9).

DIDVQ−01

DTC	P2740	Transmission Fluid Temperature Sensor ”B” Circuit

DTC	P2742	Transmission Fluid Temperature Sensor ”B” Circuit Low Input

DTC	P2743	Transmission Fluid Temperature Sensor ”B” Circuit High Input

CIRCUIT DESCRIPTION

ATF (Automatic Transmission Fluid) temperature sensor No.2 is on the transmission and just in front of the oil cooler inlet pipeline.

If ECM detects the abnormally high temperature of ATF by this sensor, it draws driver’s attention by illuminating the warning lamp.

HINT:

- The temperature of ATF easily rises when towing, climbing hills and in traffic, etc.
- If the ATF temperature sensor No.2 becomes short−circuited, the signal that indicates the ATF temperature is 150°C (302°F) or higher is input in ECM.

Vehicle conditions when the sensor is normal and when the sensor is short−circuited are indicated in the table below.

ATF temperature Sensor No.2 State	Detection Condition	Symptom	Recovery Condition
Sensor is normal	• AT fluid temp. more than 150°C (302°F).	• AT Oil Temp. warning light remains on	• AT fluid temp. less than 135°C (275°F). *2
	• AT fluid temp. more than 130°C (266°F).	• Shift point too high.	• AT fluid temp. less than 110°C (230°F).
	When the conditions (a) and (b) are satisfied. (a) AT fluid temp. more than 130°C (266°F). (b) Engine coolant temp. more than 95°C (203°F).	• Lock−up at 3rd gear. *1	• AT fluid temp. less than 110°C (230°F) *2 and engine coolant temp. less than 95°C (203°F).
Sensor is short−circuited	• Any conditions.	• AT Oil Temp. warning light remains on • Shift point too high.	• Symptoms still occur
	• Engine coolant temp. more than 95°C (203°F).	• Lock−up at 3rd gear. *1	• Symptoms still occur

HINT:

*1: When AT fluid temperature is normal, transmission locks up at 5th gear with the shift lever in D position and at 4th gear with the shift lever in 4 position.

*2: When AT fluid temperature is in normal range, it decreases to less than 135°C (275°F) within 5 minutes with the shift lever in P or N position in an idling state.

DTC No.	DTC Detecting Condition	Trouble Area
P2740	(a) and (b) are detected momentarily within 0.5 sec. when neither P2742 nor P2743 is detected (1−trip detection logic) (a) ATF temperature sensor No.2 resistance is less than 25 Ω (0.046 V) (b) ATF temperature sensor No.2 resistance is more than 156 kΩ (4.915 V) HINT: Within 0.5 sec. the malfunction switches from (a) to (b) or from (b) to (a)	• Open or short in ATF temperature sensor No.2 circuit • Transmission wire (ATF temperature sensor No.2) • ECM
P2742	ATF temperature sensor No.2 resistance is less than 25 Ω (0.046 V) for 0.5 sec. or more (1−trip detection logic)	• Short in ATF temperature sensor No.2 circuit • Transmission wire (ATF temperature sensor No.2) • ECM
P2743	ATF temperature No.2 sensor resistance is more than 156 kΩ (4.915 V) when 15 minutes or more after the engine start DTC is detected for 0.5 sec. or more (1−trip detection logic)	• Open in ATF temperature sensor No.2 circuit • Transmission wire (ATF temperature sensor No.2) • ECM

MONITOR DESCRIPTION

The Automatic Transmission Fluid (ATF) temperature sensor converts ATF temperature to an electrical resistance value. Based on the resistance, the ECM determines the ATF temperature, and the ECM detects an open or short in the AFT temperature circuit. If the resistance value of the ATF temperature is less than 25 Ω (0.046 V) or more than 156 kΩ (4.915 V), the ECM interprets this as a fault in the ATF sensor or wiring. The ECM will turn on the MIL and store the DTC.

MONITOR STRATEGY

Related DTCs	P2740	ATF temperature sensor/Range check (Fluttering)
	P2742	ATF temperature sensor/Range check (Low voltage)
	P2743	ATF temperature sensor/Range check (High voltage)
Required sensors/Components	ATF temperature sensor (TFT sensor)	
Frequency of operation	Continuous	
Duration	0.5 sec.	
MIL operation	Immediate	
Sequence of operation	None	

TYPICAL ENABLING CONDITIONS

Item	Specification	
	Minimum	Maximum
The monitor will run whenever these DTCs are not present.	See page DI−963	
Range check (Fluttering, Low voltage)		
The typical enabling condition is not available.	−	
Range check (High voltage)		
Time after engine start	15 min. or more	−

TYPICAL MALFUNCTION THRESHOLDS

Detection criteria	Threshold
Range check (Fluttering)	
TFT (transmission fluid temperature) sensor voltage	Less than 0.046 V or More than 4.915 V
Range check (Low voltage)	
TFT (transmission fluid temperature) sensor voltage	Less than 0.046 V
Range check (High voltage)	
TFT (transmission fluid temperature) sensor voltage	More than 4.915 V

COMPONENT OPERATING RANGE

Parameter	Standard value
TFT (transmission fluid temperature) sensor	Atmospheric temperature to approx. 130°C (266°F)

WIRING DIAGRAM

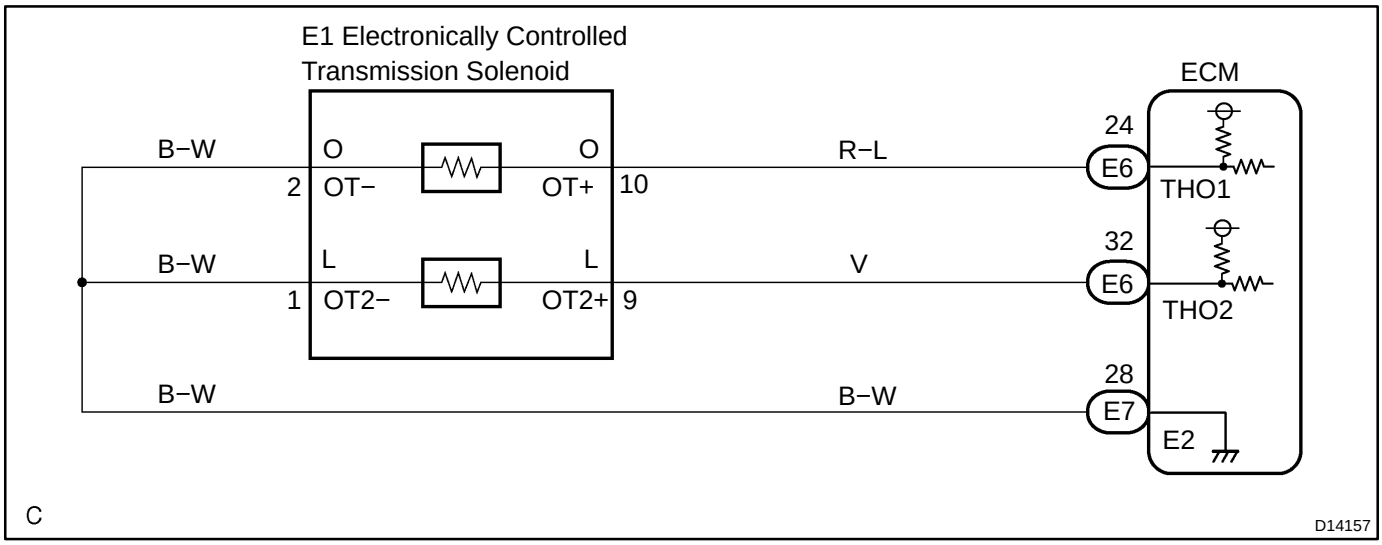

INSPECTION PROCEDURE

HINT:

According to the DATA LIST displayed by the OBD II scan tool or hand−held tester, you can read the value of the switch, sensor, actuator and so on without parts removal. Reading the DATA LIST as the first step of troubleshooting is one method to shorten labor time.

(a) Warm up the engine.
(b) Turn the ignition switch off.
(c) Connect the OBD II scan tool or hand−held tester to the DLC3.
(d) Turn the ignition switch to the ON position.
(e) Push the ”ON” button of the OBD II scan tool or the hand−held tester.
(f) When you use the hand−held tester:
Select the item ”DIAGNOSIS / ENHANCED OBD II / DATA LIST”.
(g) According to the display on the tester, read the ”DATA LIST”.

Item	Measurement Item/ Range (display)	Normal Condition
AT FLUID TEMP 2	ATF Temp. Sensor Value/ min.: −40°C (−40°F) max.: 215°C (419°F)	• After Stall Test; Approx. 80°C (176°F) • Equal to ambient temperature when cold soak

HINT:

When DTC P2742 is output and hand−held tester output is 150°C (302°F) or more, there is a short circuit.
When DTC P2743 is output and hand−held tester output is −40°C (−40°F), there is an open circuit.
Measure the resistance between terminal THO2 (OT2) and body ground.

Temperature Displayed	Malfunction
−40˚C (−40˚F)	Open circuit
150˚C (302˚F) or more	Short circuit

1	Inspect transmission wire (ATF temperature sensor No.2)

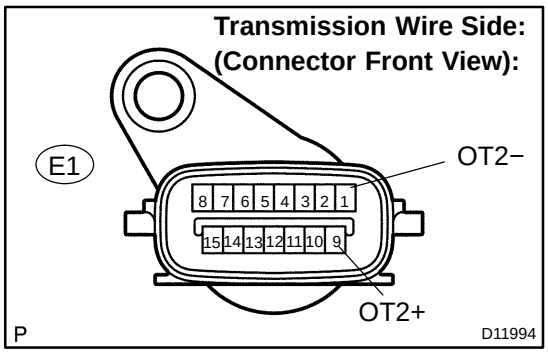

PREPARATION:

Disconnect the transmission wire connector from the transmission.

CHECK:

Measure the resistance according to the value(s) in the table below.

OK:

Tester Connection	Specified Condition
1 (OT2−) − 9 (OT2+)	25 Ω to 156 kΩ
1 (OT2−) − Body ground	10 kΩ or higher
9 (OT2+) − Body ground	10 kΩ or higher

HINT:

If the resistance is out of the specified range with either the ATF temperature shown in the table below, the driveability of the vehicle may decrease.

ATF Temperature	Specified Condition
20°C (68°F)	3 to 4 kΩ
110°C (230°F)	0.22 to 0.28 kΩ

NG → **Repair or replace the transmission wire (ATF temperature sensor No.2) (See page AT−9).**

OK

2	Check harness and connector (Transmission wire − ECM)

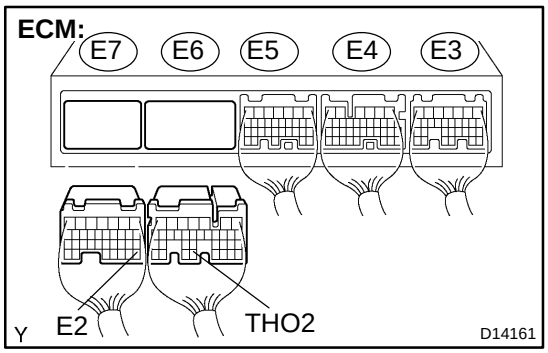

PREPARATION:

(a) Connect the transmission wire connector.

(b) Disconnect the connector of the ECM.

CHECK:

Measure the resistance according to the value(s) in the table below.

OK:

Tester Connection	Specified Condition
E6 − 32 (THO2) − E7 − 28 (E2)	25 Ω to 156 kΩ

CHECK:

Measure the resistance according to the value(s) in the table below.

OK:

Tester Connection	Specified Condition
E6 − 32 (THO2) − Body ground	10 kΩ or higher
E7 − 28 (E2) − Body ground	↑

NG → **Repair or replace the harness or connector (See page IN−30).**

OK

Replace the ECM (See page SF−66).

DIDVR−01

DTC	P2757	Torque Converter Clutch Pressure Control Solenoid Performance(Shift Solenoid Valve SLU)

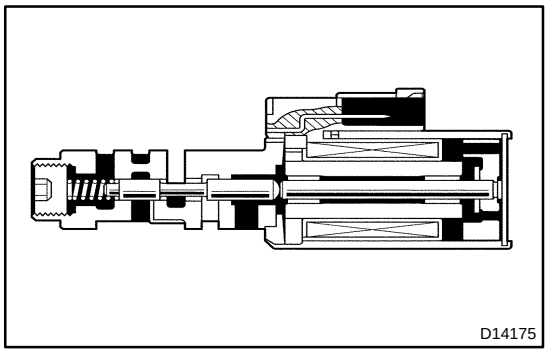

SYSTEM DESCRIPTION

The ECM uses the signals from the throttle position sensor, Air−flow meter, turbine (input) speed sensor, output speed sensor and crankshaft position sensor to monitor the engagement condition of the lock−up clutch.

Then the ECM compares the engagement condition of the lock−up clutch with the lock−up schedule in the ECM memory to detect a mechanical problems of the shift solenoid valve SLU, valve body and torque converter clutch.

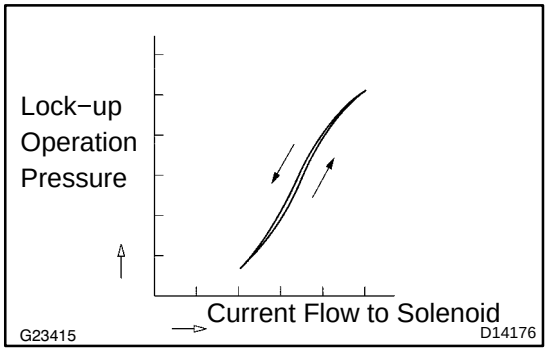

DTC No.	DTC Detection Condition	Trouble Area
P2757	Lock−up does not occur when driving in the lock−up range (normal driving at 80 km/h [50 mph]), or lock−up remains ON in the lock−up OFF range. (2−trip detection logic)	• Shift solenoid valve SLU remains open or closed • Valve body is blocked • Torque converter clutch • Automatic transmission (clutch, brake or gear, etc.) • Line pressure is too low

MONITOR DESCRIPTION

Torque converter lock−up is controlled by the ECM based on the turbine (input) speed sensor NT, output speed sensor SP2, engine rpm, engine load, engine temperature, vehicle speed, transmission temperature, and gear selection. The ECM determines the lock−up status of the torque converter by comparing the engine rpm (NE) to the input turbine rpm (NT). The ECM calculates the actual transmission gear by comparing input turbine rpm (NT) to output shaft rpm (SP2). When conditions are appropriate, the ECM requests ”lock−up” by applying control voltage to the shift solenoid SLU. When the SLU is turned on, it applies pressure to the lock−up relay valve and locks the torque converter clutch.

If the ECM detects no lock−up after lock−up has been requested or if it detects lock−up when it is not requested, the ECM interprets this as a fault in the shift solenoid valve SLU or lock−up system performance. The ECM will turn on the MIL and store the DTC.

Example:

When any of the following is met, the system judges it as a malfunction.

(a) There is a difference in rotation between the input side (engine speed) and output side (input turbine speed) of the torque converter when the ECM commands lock−up.
(Engine speed is at least 70 rpm greater than input turbine speed.)

(b) There is no difference in rotation between the input side (engine speed) and output side (input turbine speed) of the torque converter when the ECM commands lock−up off.
(The difference between engine speed and input turbine speed is less than 35 rpm.)

MONITOR STRATEGY

Related DTCs	P2757	Shift solenoid valve SLU/OFF malfunction
		Shift solenoid valve SLU/ON malfunction
Required sensors/Components	Main	Shift solenoid valve SLU
	Sub	Valve body, Vehicle speed sensor, Throttle position sensor, Speed sensor (NT), Speed sensor (NO)
Frequency of operation	Continuous	
Duration	OFF malfunction (A)	2 sec.
	OFF malfunction (B)	0.4 sec.
	ON malfunction	1.8 sec.
MIL operation	2 driving cycles	
Sequence of operation	None	

TYPICAL ENABLING CONDITIONS

Item	Specification	
	Minimum	Maximum
All:		
Turbine speed sensor circuit	Not circuit malfunction	
Output speed sensor circuit	Not circuit malfunction	
Shift solenoid valve S1 circuit	Not circuit malfunction	
Shift solenoid valve S2 circuit	Not circuit malfunction	
Shift solenoid valve SR circuit	Not circuit malfunction	
Torque converter clutch pressure control solenoid circuit	Not circuit malfunction	
KCS sensor circuit	Not circuit malfunction	
ETCS (Electric throttle control system)	Not system down	
Transmission range	”D”	
ECT (Engine coolant temperature)	40˚C (104˚F) or more	−
Spark advance from Max. retard timing by KCS control	0˚ CA or more	−
Engine	Starting	
ECM selected gear	4th or 5th	
Vehicle speed	25 km/h (15.5 mph) or more	−
Shift solenoid valve S1 circuit	Not on malfunction	
Shift solenoid valve S2 circuit	Not on malfunction	
Shift solenoid valve SL2 circuit	Not on malfunction	
1−2 Shift valve	Not on malfunction	
Transfer neutral position switch	OFF	
Transfer range	”HIGH”*1	
Transfer range ”HIGH” *1 (This condition is applied only 4WD)		
*1 Following conditions met		
Vehicle speed sensor circuit	Not circuit malfunction	
Output shaft speed sensor circuit	Not circuit malfunction	
Transfer output speed	143 rpm or more	−
NO/NOtf (Transfer input speed/Transfer output speed)	0.9 to 1.1	
OFF malfunction (A)		
ECM lock−up command	ON (SLU pressure: 513kpa or more)	
Vehicle speed	−	Less than 100 km/h (62.2 mph)
OFF malfunction (B)		
ECM selected gear	2nd	
Vehicle speed	2 km/h (1.2 mph) or more	−
Output speed	2nd → 1st down shift point or more	−
Throttle valve opening angle	6.5% or more at 2,000 rpm (Conditions vary with engine speed)	−
ON malfunction		
ECM lock−up command	OFF (SLU pressure: less than 4kPa)	

Throttle valve opening angle	7% or more	−
Vehicle speed	−	Less than 60 km/h (37.3 mph)

TYPICAL MALFUNCTION THRESHOLDS

Detection criteria	Threshold
Both of the following conditions are met: OFF malfunctions (A) and (B)	
OFF malfunction (A)	
Engine speed − Turbine speed	70 rpm or more
OFF malfunction (B)	
Turbine speed/Output speed	Not 3.30 to 7.50
ON malfunction	
2 detections are necessary per driving cycle 1st detection; temporary flag ON 2nd detection; pending fault code ON	
Vehicle speed must be under 10 km/h (6.2 mph) once before 2nd detection	
Difference between engine speed and turbine speed	Less then 35 rpm

INSPECTION PROCEDURE

HINT:

Performing the ACTIVE TEST using the hand−held tester allows the relay, VSV, actuator and so on to operate without parts removal. Performing the ACTIVE TEST as the first step of troubleshooting is one method to shorten labor time.

It is possible to display the DATA LIST during the ACTIVE TEST.

(a) Warm up the engine.
(b) Turn the ignition switch off.
(c) Connect the hand−held tester to the DLC3.
(d) Turn the ignition switch to the ON position.
(e) Turn on the tester.
(f) Select the item ”DIAGNOSIS / ENHANCED OBD II / ACTIVE TEST”.
(g) According to the display on the tester, perform the ”ACTIVE TEST”.

Item	Test Details	Diagnostic Note
LOCK UP	[Test Details] Control the shift solenoid SLU to set the automatic transmission to the lock−up condition. [Vehicle Condition] • Throttle valve opening angle: Less than 35 % • Vehicle Speed: 60 km/h (37 mph) or more	Possible to check the SLU operation.

HINT:

- This test can be conducted when the vehicle speed is 60 km/h (37 mph) or more.
- This test can be conducted in the 5th gear.
- Lightly depress the accelerator pedal and check that the engine speed does not change abruptly.

HINT:

- When changing the accelerator pedal opening angle while driving, if the engine speed does not change, lock−up is on.
- Slowly release, but not fully, the accelerator pedal in order to decelerate. (Fully releasing the pedal will close the throttle valve and lock−up may be turned off automatically.)

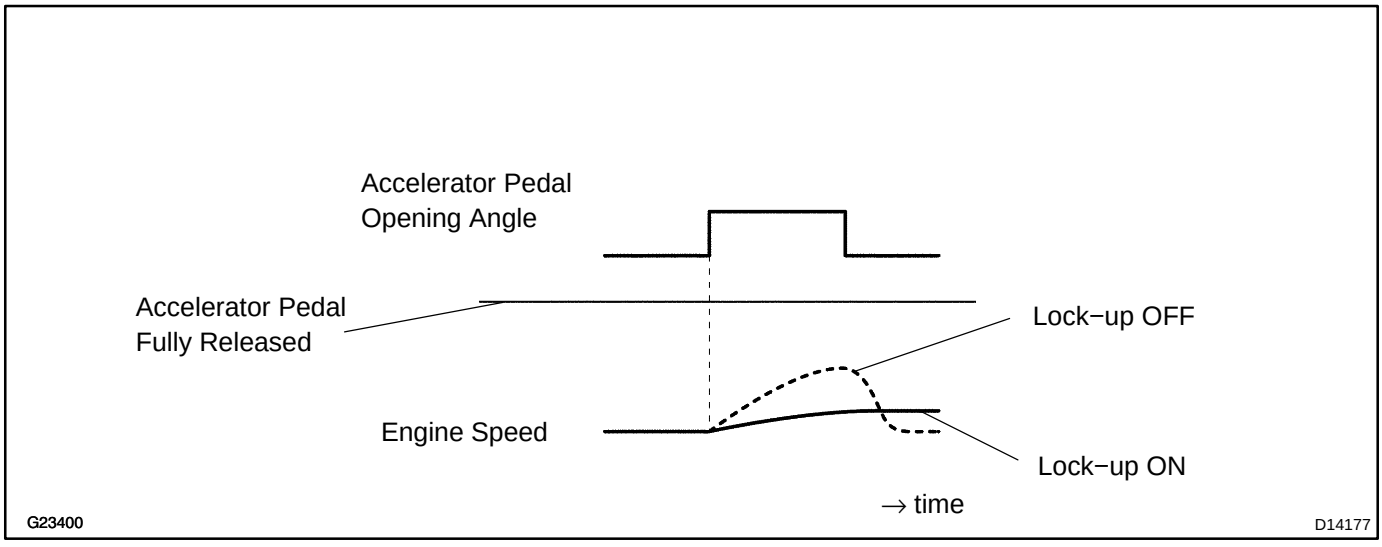

1	**Check other DTCs output (in addition to DTC P2757).**

PREPARATION:

(a) Turn the ignition switch off.
(b) Connect the OBD II scan tool or hand−held tester to the DLC3.
(c) Turn the ignition switch to the ON position.
(d) Turn on the tester.
(e) Select the item ”DIAGNOSIS / ENHANCED OBD II / DTC INFO / CURRENT CODES”.

CHECK:

Read the DTCs using the OBD II scan tool or the hand−held tester.

RESULT:

Display (DTC output)	Proceed to
Only ”P2757” is output	A
”P2757” and other DTCs	B

HINT:

If any other codes besides ”P2757” are output, perform troubleshooting for those DTCs first.

B → **Go to DTC chart (See page DI−991).**

A

2	Check shift solenoid valve SLU operation.

Shift Solenoid Valve SLU:

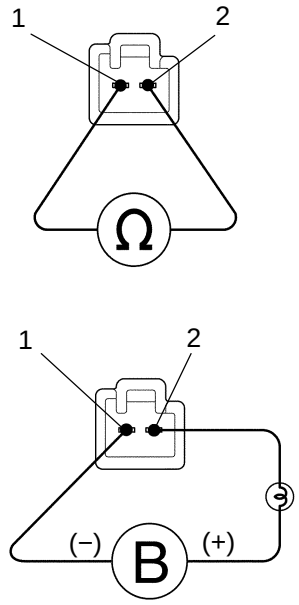

PREPARATION:

Remove the shift solenoid valve SLU (See page AT−12).

CHECK:

Measure the resistance according to the value(s) in the table below.

OK:

Tester Connection	Specified Condition 20°C (68°F)
1 − 2	5.0 to 5.6 Ω

CHECK:

Connect the positive (+) lead with a 21 W bulb to terminal 2 and the negative (−) lead to terminal 1 of the solenoid valve connector, then check the movement of the valve.

OK:

The solenoid makes an operating sound.

NG → **Replace the shift solenoid valve SLU (See page AT−12).**

OK

3	Inspect valve body (See page AT−12).

OK:

There are no foreign objects on each valve.

NG → **Repair or replace valve body.**

OK

4	Check torque converter clutch (See page AT−39).

OK:

The torque converter clutch operates normally.

NG → Replace the torque converter clutch..

OK →

Repair or replace transmission (See page AT−26).

DIDVS−01

DTC	P2759	Torque Converter Clutch Pressure Control Solenoid Control Circuit Electrical(Shift Solenoid Valve SLU)

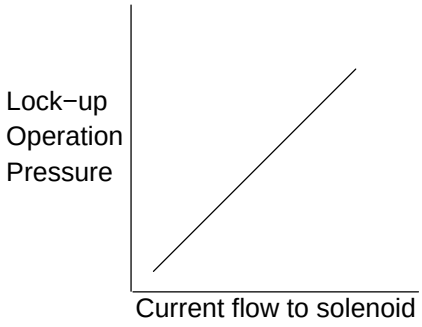

CIRCUIT DESCRIPTION

The amount of current flow to the solenoid is controlled by the (*) duty ratio of the ECM output signal. The higher the duty ratio becomes, the higher the lock−up hydraulic pressure becomes during the lock−up operation.

(*) Duty Ratio

The duty ratio is the ratio of the period of continuity in one cycle. For example, if A is the period of continuity in one cycle, and B is the period of non−continuity, then

Duty Ratio = A/(A + B) x 100 (%)

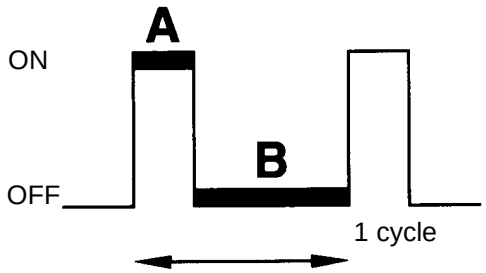

BE4056

D00160

DTC No.	DTC detection condition	Trouble Area
P2759	Open or short is detected in shift solenoid valve SLU circuit for 1 second or more while driving (1−trip detection logic).	• Open or short in shift solenoid valve SLU circuit • Shift solenoid valve SLU • ECM

MONITOR DESCRIPTION

When an open or short in a shift solenoid valve (SLU) circuit is detected, the ECM determines there is a malfunction. The ECM will turn on the MIL and store this DTC.

MONITOR STRATEGY

Related DTCs	P2759	Shift solenoid valve SLU/Range check
Required sensors/Components	Shift solenoid valve SLU	
Frequency of operation	Continuous	
Duration	1 sec.	
MIL operation	Immediate	
Sequence of operation	None	

TYPICAL ENABLING CONDITIONS

Item	Specification	
	Minimum	Maximum
The monitor will run whenever these DTCs are not present	See page DI−973	
Case 1:		
Battery voltage	12 V or more	−
Ignition switch	ON	
Starter	OFF	
Case 2:		
Battery voltage	10 V or more	Less than 12 V
CPU commanded duty	−	Less than 75%
Ignition switch	ON	
Starter	OFF	

TYPICAL MALFUNCTION THRESHOLDS

Detection criteria	Threshold
Case 1:	
Output signal duty	100%
Case 2:	
Output signal duty	100%

COMPONENT OPERATING RANGE

Parameter	Standard value
Output signal duty	Less than 100%

WIRING DIAGRAM

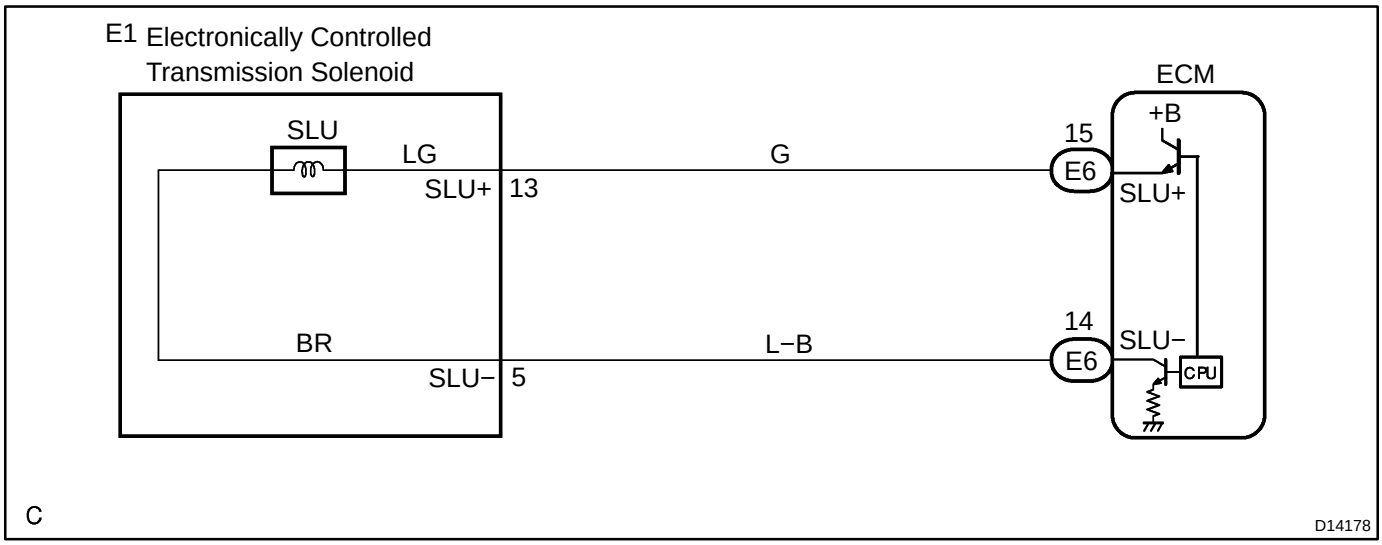

INSPECTION PROCEDURE

1	**Inspect transmission wire.**

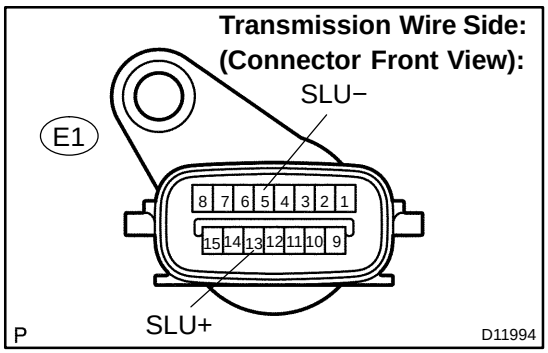

PREPARATION:

Disconnect the transmission wire connector.

CHECK:

Measure the resistance according to the value(s) in the table below.

OK:

Tester Connection	Specified Condition 20°C (68°F)
13 (SLU+) − 5 (SLU−)	5.0 to 5.6 Ω

CHECK:

Measure the resistance according to the value(s) in the table below.

OK:

Tester Connection	Specified Condition
13 (SLU+) − Body ground	10 kΩ or higher
5 (SLU−) − Body ground	↑

NG → **Go to step 3.**

OK

2	Check harness and connector (Transmission wire − ECM)

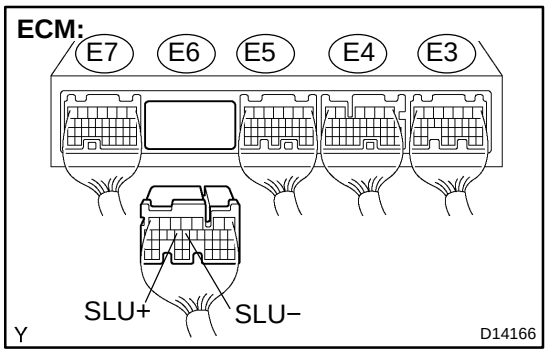

PREPARATION:

(a) Connect the transmission wire connector.

(b) Disconnect the ECM connector.

CHECK:

Measure the resistance according to the value(s) in the table below.

OK:

Tester Connection	Specified Condition 20°C (68°F)
E6 − 15 (SLU+) − E6 − 14 (SLU−)	5.0 to 5.6 Ω

CHECK:

Measure the resistance according to the value(s) in the table below.

OK:

Tester Connection	Specified Condition
E6 − 15 (SLU+) − Body ground	10 kΩ or higher
E6 − 14 (SLU−) − Body ground	↑

NG → **Repair or replace the harness or connector (See page IN−30).**

OK →

Replace the ECM (See page SF−66).

3	Inspect shift solenoid valve SLU.

Shift Solenoid Valve SLU:

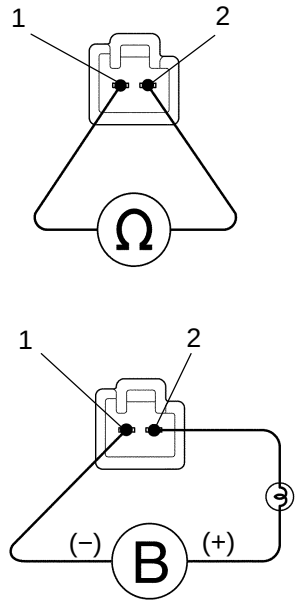

D12795

PREPARATION:

Remove the shift solenoid valve SLU (See page AT−12).

CHECK:

Measure the resistance according to the value(s) in the table below.

OK:

Tester Connection	Specified Condition 20°C (68°F)
1 − 2	5.0 to 5.6 Ω

CHECK:

Connect the positive (+) lead with a 21 W bulb to terminal 2 and the negative (−) lead to terminal 1 of the solenoid valve connector, then check the movement of the valve.

OK:

The solenoid makes an operating sound.

NG → **Replace the shift solenoid valve SLU (See page AT−12).**

OK

Repair or replace the transmission wire (See page AT−9).

DIDV8−01

CIRCUIT INSPECTION

DTC	P0705	Transmission Range Sensor Circuit Malfunction (PRNDL Input)

CIRCUIT DESCRIPTION

The park/neutral position switch detects the shift lever position and sends signals to the ECM.

DTC No.	DTC Detection Condition	Trouble Area
P0705	(2−trip detection logic) • All switches are OFF simultaneously for NSW, R, N, D, 3 and 2 positions. • 2 or more switches are ON simultaneously for NSW, R, D, 3 and 2 positions.	• Open or short in park/neutral position switch circuit • Park/neutral position switch • ECM

MONITOR DESCRIPTION

These DTCs indicate a problem with the park/neutral position switch and the wire harness in the park/neutral position switch circuit.
The park/neutral position switch detects the shift lever position and sends a signal to the ECM.
For security, the park/neutral position switch detects the shift lever position so that engine can be started only when the shift lever is in the P or N position.
The park/neutral position switch sends a signal to the ECM according to the shift position (NSW, R, D, 3 or 2).
The ECM determines that there is a problem with the switch or related parts if it receives more than 1 position signal simultaneously. The ECM will turn on the MIL and store the DTC.

MONITOR STRATEGY

Related DTCs	P0705	Park/neutral position switch/Verify switch input
Required sensors/Components	Park/neutral position switch	
Frequency of operation	Continuous	
Duration	Condition (A)	2 sec.
	Condition (B)	60 sec.
MIL operation	2 driving cycle	
Sequence of operation	None	

TYPICAL ENABLING CONDITIONS

Item	Specification	
	Minimum	Maximum
The monitor will run whenever this DTC is not present.	See page DI−963	
Ignition switch	ON	
Battery voltage	10.5 V or more	

TYPICAL MALFUNCTION THRESHOLDS

Detection criteria	Threshold
One of the following conditions is met: Condition (A) or (B)	
Condition (A)	
Number of the following signal input at the same time	2 or more
NSW switch	ON
R switch	
D switch	
3 switch	
2 switch	
Condition (B)	
All of following conditions are met	
NSW switch	OFF
R switch	
D switch	
3 switch	
2 switch	

COMPONENT OPERATING RANGE

Parameter	Standard value
Park/neutral position switch	The park/neutral position switch sends only one signal to the ECM.

WIRING DIAGRAM

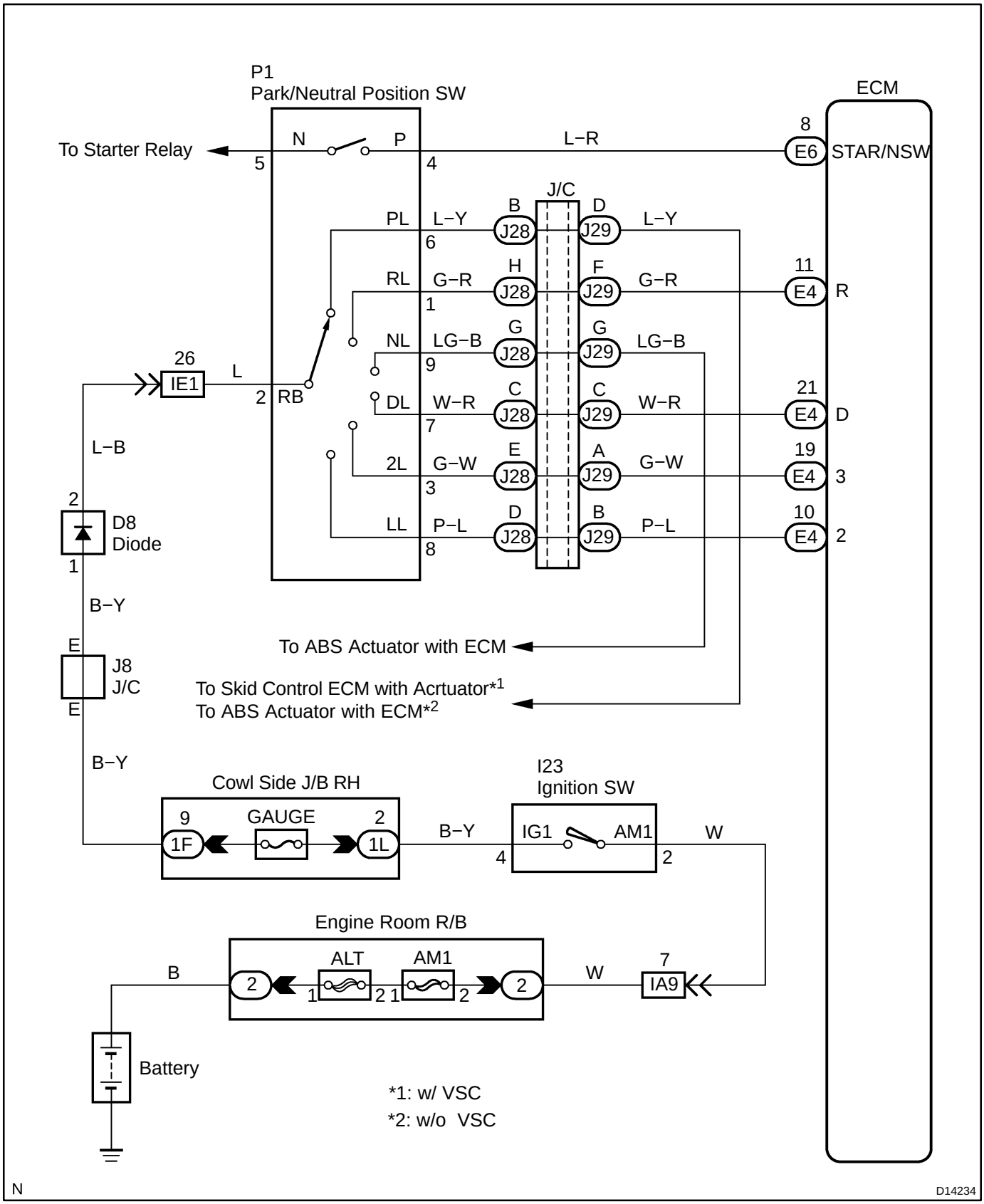

INSPECTION PROCEDURE

HINT:

According to the DATA LIST displayed by the OBD II scan tool or hand−held tester, you can read the value of the switch, sensor, actuator and so on without parts removal. Reading the DATA LIST as the first step of troubleshooting is one method to shorten labor time.

(a) Warm up the engine.
(b) Turn the ignition switch off.
(c) Connect the OBD II scan tool or hand−held tester to the DLC3.
(d) Turn the ignition switch to the ON position.
(e) Push the ”ON” button of the OBD II scan tool or the hand−held tester.
(f) When you use the hand−held tester:
Select the item ”DIAGNOSIS / ENHANCED OBD II / DATA LIST”.
(g) According to the display on the tester, read the ”DATA LIST”.

Item	Measurement Item/ Range (display)	Normal Condition	Diagnostic Note
PNP SW [NSW]	PNP SW Status/ ON or OFF	Shift lever position is; P and N: ON Except P and N: OFF	When the shift lever position displayed on the hand−held tester differs from the actual position, adjustment of the PNP switch or the shift cable may be incorrect.
LOW	PNP SW Status/ ON or OFF	• Shift lever position is 2: OFF ↓ • Shift position L switch Push: ON ↓ • Shift position L switch Push: OFF	↑
2ND	PNP SW Status/ ON or OFF	Shift lever position is; 2 and L: ON Except 2 and L: OFF	↑
3RD	PNP SW Status/ ON or OFF	Shift lever position is; 3: ON Except 3: OFF	↑
DRIVE	PNP SW Status/ ON or OFF	Shift lever position is; D: ON Except D: OFF	↑
REVERSE	PNP SW Status/ ON or OFF	Shift lever position is; R: ON Except R: OFF	↑

1	Inspect park/neutral position switch.

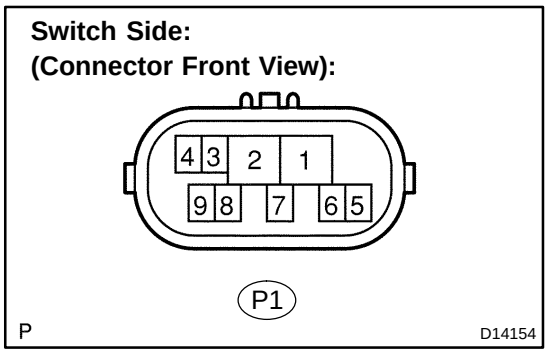

PREPARATION:

(a) Jack up the vehicle.

(b) Disconnect the park/neutral position switch connector.

CHECK:

Measure the resistance according to the value(s) in the table below when the shift lever is moved to each position.

OK:

Shift Position	Tester Connection	Specified Condition
P	2 − 6 and 4 − 5	Below 1 Ω
Except P	↑	10 kΩ or higher
R	2 − 1	Below 1 Ω
Except R	↑	10 kΩ or higher
N	2 − 9 and 4 − 5	Below 1 Ω
Except N	↑	10 kΩ or higher
D	2 − 7	Below 1 Ω
Except D	↑	10 kΩ or higher
3	2 − 3	Below 1 Ω
Except 3	↑	10 kΩ or higher
2	2 − 8	Below 1 Ω
Except 2	↑	10 kΩ or higher

NG → **Replace park/neutral position switch (See page AT−11).**

OK →

2	Check harness and connector (Park/neutral position switch − ECM).

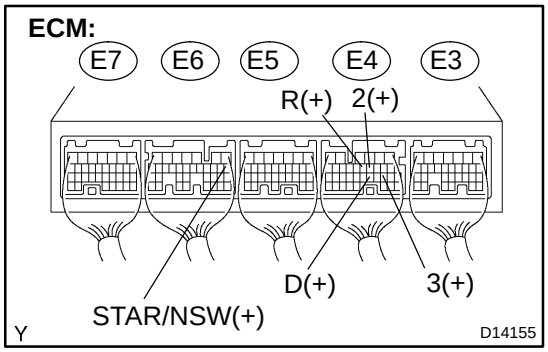

PREPARATION:

(a) Connect the park/neutral position switch connector.

(b) Turn the ignition switch ON.

CHECK:

Measure the voltage according to the value(s) in the table below when the shift lever is moved to each position.

OK:

Shift Position	Tester connection	Specified condition
P and N	E6 − 8 (STAR/NSW) − Body ground	Below 2 V
Except P and N	↑	10 to 14 V
R	E4 − 11 (R) − Body ground	10 to 14 V*
Except R	↑	Below 1 V
D	E4 − 21 (D) − Body ground	10 to 14 V
Except D	↑	Below 1 V
3	E4 − 19 (3) − Body ground	10 to 14 V
Except 3	↑	Below 1 V
2 and L	E4 − 10 (2) − Body ground	10 to 14 V
Except 2 and L	↑	Below 1 V

HINT:

*: The voltage will drop slightly due to lighting up of the back up light.

NG → **Repair or replace the harness or connector (See page IN−30).**

OK →

Replace the ECM (See page SF−66).

DIDV9−01

DTC	**P0710**	**Transmission Fluid Temperature Sensor ”A” Circuit**

DTC	**P0712**	**Transmission Fluid Temperature Sensor ”A” Circuit Low Input**

DTC	**P0713**	**Transmission Fluid Temperature Sensor ”A” Circuit High Input**

CIRCUIT DESCRIPTION

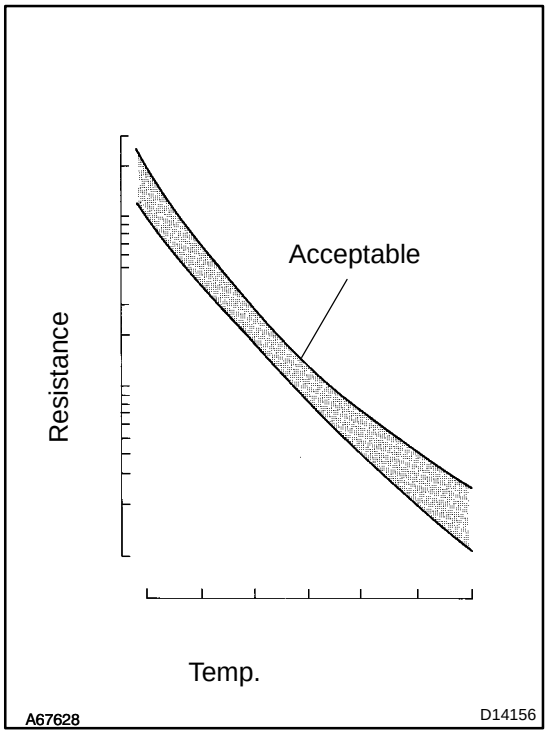

The ATF (Automatic Transmission Fluid) temperature sensor converts the fluid temperature into a resistance value which is input into the ECM.
The ECM applies a voltage to the temperature sensor through ECM terminal THO1.
The sensor resistance changes with the transmission fluid temperature. As the temperature becomes higher, the sensor resistance decreases.
One terminal of the sensor is grounded so that the sensor resistance decreases and the voltage goes down as the temperature becomes higher.
The ECM calculates the fluid temperature based on the voltage signal.

DTC No.	DTC Detection Condition	Trouble Area
P0710	(a) and (b) are detected momentarily within 0.5 sec. when neither P0712 nor P0713 is detected (1−trip detection logic) (a) ATF temperature sensor No.1 resistance is less than 79 Ω. (b) ATF temperature sensor No.1 resistance is more than 156 kΩ. HINT: Within 0.5 sec., the malfunction switches from (a) to (b) or from (b) to (a)	• Open or short in ATF temperature sensor No.1 circuit • Transmission wire (ATF temperature sensor No.1) • ECM
P0712	ATF temperature sensor No.1 resistance is less than 79 Ω for 0.5 sec. or more (1−trip detection logic)	• Short in ATF temperature sensor No.1 circuit • Transmission wire (ATF temperature sensor No.1) • ECM
P0713	ATF temperature No.1 sensor resistance is more than 156 kΩ when 15 minutes or more have elapsed after the engine start DTC is detected for 0.5 sec. or more (1−trip detection logic)	• Open in ATF temperature sensor No.1 circuit • Transmission wire (ATF temperature sensor No.1) • ECM

MONITOR DESCRIPTION

These DTCs indicate an open or short in the automatic transmission fluid (ATF) temperature sensor circuit. The automatic transmission fluid (ATF) temperature sensor converts ATF temperature to an electrical resistance value. Based on the resistance, the ECM determines the ATF temperature, and the ECM detects an open or short in the ATF temperature circuit. If the resistance value of the ATF temperature is less than 79Ω*1 or more than 156kΩ*2, the ECM interprets this as a fault in the ATF sensor or wiring. The ECM will turn on the MIL and store the DTC.
*1: 150°C (302°F) or more is indicated regardless of the actual ATF temperature.
*2: −40°C (−40°F) is indicated regardless of the actual ATF temperature.
HINT:
The ATF temperature can be checked on the OBD II scan tool or hand−held tester display.

MONITOR STRATEGY

Related DTCs	P0710	ATF temperature sensor/Range check (Fluttering)
	P0712	ATF temperature sensor/Range check (Low resistance)
	P0713	ATF temperature sensor/Range check (High resistance)
Required sensors/Components	ATF temperature sensor (TFT sensor)	
Frequency of operation	Continuous	
Duration	0.5 sec.	
MIL operation	Immediate	
Sequence of operation	None	

TYPICAL ENABLING CONDITIONS

Item	Specification	
	Minimum	Maximum
The monitor will run whenever these DTCs are not present.	See page DI−963	
Range check (Fluttering, Low resistance)		
The typical enabling condition is not available.	−	
Range check (High resistance)		
Time after engine start	15 min. or more	−

TYPICAL MALFUNCTION THRESHOLDS

Detection criteria	Threshold
Range check (Fluttering)	
TFT (transmission fluid temperature) sensor resistance	Less than 79 Ω or More than 156 kΩ
Range check (Low resistance)	
TFT (transmission fluid temperature) sensor resistance	Less than 79 Ω
Range check (High resistance)	
TFT (transmission fluid temperature) sensor resistance	More than 156 kΩ

COMPONENT OPERATING RANGE

Parameter	Standard value
TFT (transmission fluid temperature) sensor	Atmospheric temperature to approx. 130˚C (266˚F)

WIRING DIAGRAM

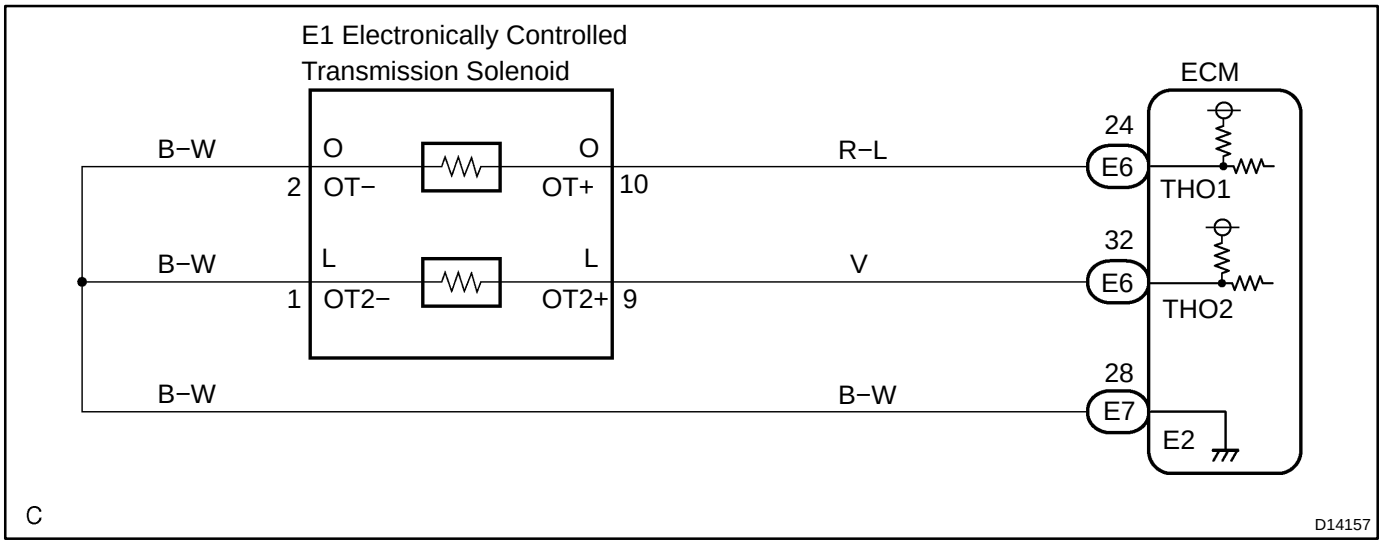

INSPECTION PROCEDURE

HINT:

According to the DATA LIST displayed by the OBD II scan tool or hand−held tester, you can read the value of the switch, sensor, actuator and so on without parts removal. Reading the DATA LIST as the first step of troubleshooting is one method to shorten labor time.

(a) Warm up the engine.
(b) Turn the ignition switch off.
(c) Connect the OBD II scan tool or hand−held tester to the DLC3.
(d) Turn the ignition switch to the ON position.
(e) Push the ”ON” button of the OBD II scan tool or the hand−held tester.
(f) When you use the hand−held tester:
Select the item ”DIAGNOSIS / ENHANCED OBD II / DATA LIST”.
(g) According to the display on the tester, read the ”DATA LIST”.

Item	Measurement Item/ Range (display)	Normal Condition
AT FLUID TEMP 1	ATF Temp. Sensor Value/ min.: −40°C (−40°F) max.: 215°C (419°F)	• After Stall Test; Approx. 80°C (176°F) • Equal to ambient temperature when cold soak

HINT:

When DTC P0712 is output and hand−held tester output is 150°C (302°F) or more, there is a short circuit.
When DTC P0713 is output and hand−held tester output is −40°C (−40°F), there is an open circuit.
Measure the resistance between terminal THO1 (OT) and body ground.

Temperature Displayed	Malfunction
−40˚C (−40˚F)	Open circuit
150˚C (302˚F) or more	Short circuit

HINT:

If a circuit related to the ATF temperature sensor becomes open, P0713 is immediately set (in 0.5 second). When P0713 is set, P0711 cannot be detected.
It is not necessary to inspect the circuit when P0711 is set.

1	Inspect transmission wire (ATF temperature sensor No.1).

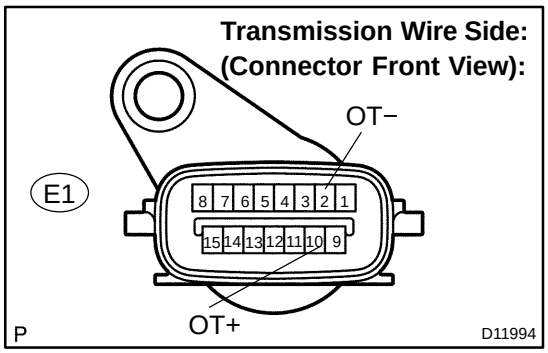

PREPARATION:

Disconnect the transmission wire connector from the transmission.

CHECK:

Measure the resistance according to the value(s) in the table below.

OK:

Tester Connection	Specified Condition
2 (OT−) − 10 (OT+)	79 Ω to 156 kΩ
2 (OT−) − Body ground	10 kΩ or higher
10 (OT+) − Body ground	10 kΩ or higher

HINT:

If the resistance is out of the specified range with either the ATF temperature shown in the table below, the driveability of the vehicle may decrease.

ATF Temperature	Specified Condition
20°C (68°F)	3 to 4 kΩ
110°C (230°F)	0.22 to 0.28 kΩ

NG → **Repair or replace the transmission wire (ATF temperature sensor No.1) (See page AT−9).**

OK

2	Check harness and connector (Transmission wire − ECM).

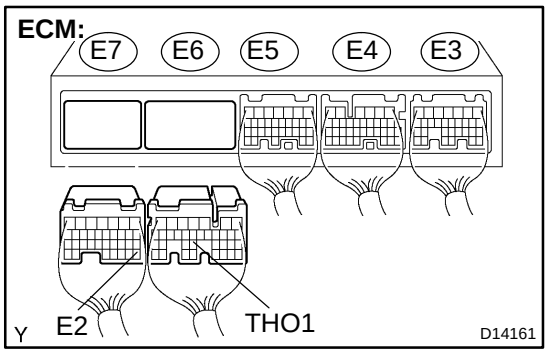

PREPARATION:

(a) Connect the transmission wire connector.

(b) Disconnect the connector of the ECM.

CHECK:

Measure the resistance according to the value(s) in the table below.

OK:

Tester Connection	Specified Condition
E6 − 24 (THO1) − E7 − 28 (E2)	79 Ω to 156 kΩ

CHECK:

Measure the resistance according to the value(s) in the table below.

OK:

Tester Connection	Specified Condition
E6 − 24 (THO1) − Body ground	10 kΩ or higher
E7 − 28 (E2) − Body ground	↑

NG → **Repair or replace the harness or connector (See page IN−30).**

OK

Replace the ECM (See page SF−66).

DIDVA−01

DTC	P0711	Transmission Fluid Temperature Sensor ”A” Performance

CIRCUIT DESCRIPTION

See page DI−999.

DTC No.	DTC Detection Condition	Trouble Area
P0711	Both (a) and (b) are detected: (2−trip detection logic) (a) Intake air and engine coolant temps. are more than −20˚C (5°F) at engine start (b) After normal driving for over 22 min. and 9 km (6 mile) or more, ATF temp. is less than 10˚C (68°F)	• Transmission wire (ATF temperature sensor No.1)

MONITOR DESCRIPTION

This DTC indicates that there is a problem with output from the automatic transmission fluid (ATF) temperature sensor and that the sensor itself is defective. The ATF temperature sensor converts the ATF temperature to an electrical resistance value. Based on the resistance, the ECM determines the ATF temperature and detects an open or short in the ATF temperature circuit or a fault in the ATF temperature sensor.
After running the vehicle for a certain period, the ATF temperature should increase. If the ATF temperature is below 20°C (68°F) after running the vehicle for a certain period, the ECM interprets this as a fault, and turns on the MIL.

MONITOR STRATEGY

Related DTCs	P0711	ATF temperature sensor/Rationality check
Required sensors/Components	ATF temperature sensor (TFT sensor)	
Frequency of operation	Continuous	
Duration	3 sec.	
MIL operation	2 driving cycles	
Sequence of operation	None	

TYPICAL ENABLING CONDITIONS

Item	Specification	
	Minimum	Maximum
The monitor will run whenever this DTC is not present.	See page DI−963	
TFT (transmission fluid temperature) sensor circuit	Not circuit malfunction	
ECT (Engine coolant temperature) sensor circuit	Not circuit malfunction	
IAT (Intake air temperature) sensor circuit	Not circuit malfunction	
Time after engine start	21 min. and 40 sec.	
Driving distance after engine start	9 km (5.6 mile) or more	−
IAT (12 sec. after engine start)	−10˚C (14˚F) or more	−
ECT (12 sec. after engine start)	−10˚C (14˚F) or more	−

TYPICAL MALFUNCTION THRESHOLDS

Detection criteria	Threshold
TFT (transmission fluid temperature)	Less than 20˚C (68˚F) (varies with TFT (transmission fluid temperature) at engine start)

WIRING DIAGRAM

See page DI−999.

INSPECTION PROCEDURE

HINT:

According to the DATA LIST displayed by the OBD II scan tool or hand−held tester, you can read the value of the switch, sensor, actuator and so on without parts removal. Reading the DATA LIST as the first step of troubleshooting is one method to shorten labor time.

(a) Warm up the engine.
(b) Turn the ignition switch off.
(c) Connect the OBD II scan tool or hand−held tester to the DLC3.
(d) Turn the ignition switch to the ON position.
(e) Push the ”ON” button of the OBD II scan tool or the hand−held tester.
(f) When you use the hand−held tester:
Select the item ”DIAGNOSIS / ENHANCED OBD II / DATA LIST”.
(g) According to the display on the tester, read the ”DATA LIST”.

Item	Measurement Item/ Range (display)	Normal Condition
AT FLUID TEMP 1	ATF Temp. Sensor Value/ min.: −40°C (−40°F) max.: 215°C (419°F)	• After Stall Test; Approx. 80°C (176°F) • Equal to ambient temperature when cold soak

HINT:

When DTC P0712 is output and hand−held tester output is 150°C (302°F) or more, there is a short circuit.
When DTC P0713 is output and hand−held tester output is −40°C (−40°F), there is an open circuit.
Measure the resistance between terminal THO1 (OT) and body ground.

Temperature Displayed	Malfunction
−40˚C (−40˚F)	Open circuit
150˚C (302˚F) or more	Short circuit

HINT:

If a circuit related to the ATF temperature sensor becomes open, P0713 is immediately set (in 0.5 second).
When P0713 is set, P0711 cannot be detected.
It is not necessary to inspect the circuit when P0711 is set.

1	**Check other DTCs output (in addition to DTC P0711).**

PREPARATION:

(a) Turn the ignition switch off.
(b) Connect the OBD II scan tool or hand−held tester to the DLC3.
(c) Turn the ignition switch to the ON position.
(d) Turn on the tester.
(e) Select the item ”DIAGNOSIS / ENHANCED OBD II / DTC INFO / CURRENT CODES”.

CHECK:

Read the DTCs using the OBD II scan tool or the hand−held tester.

RESULT:

Display (DTC output)	Proceed to
Only ”P0711” is output	A
”P0711” and other DTCs	B

HINT:

If any other codes besides ”P0711” are output, perform troubleshooting for those DTCs first.

B → **Go to DTC chart (See page DI−991).**

A

2	**Check transmission fluid level (See page DI−952).**

OK:

Automatic transmission fluid level is correct.

NG → **Add fluid (See page DI−952).**

OK

Replace the transmission wire (ATF temperature sensor) (See page AT−9).

DIDVB−01

DTC	P0717	Input Speed Sensor Circuit No Signal

CIRCUIT DESCRIPTION

This sensor detects the rotation speed of the turbine which shows the input revolution of transmission. By comparing the input turbine speed signal (NT) with the counter gear speed sensor signal (SP2), the ECM detects the shift timing of the gears and appropriately controls the engine torque and hydraulic pressure according to various conditions, thus, providing smooth gear shift.

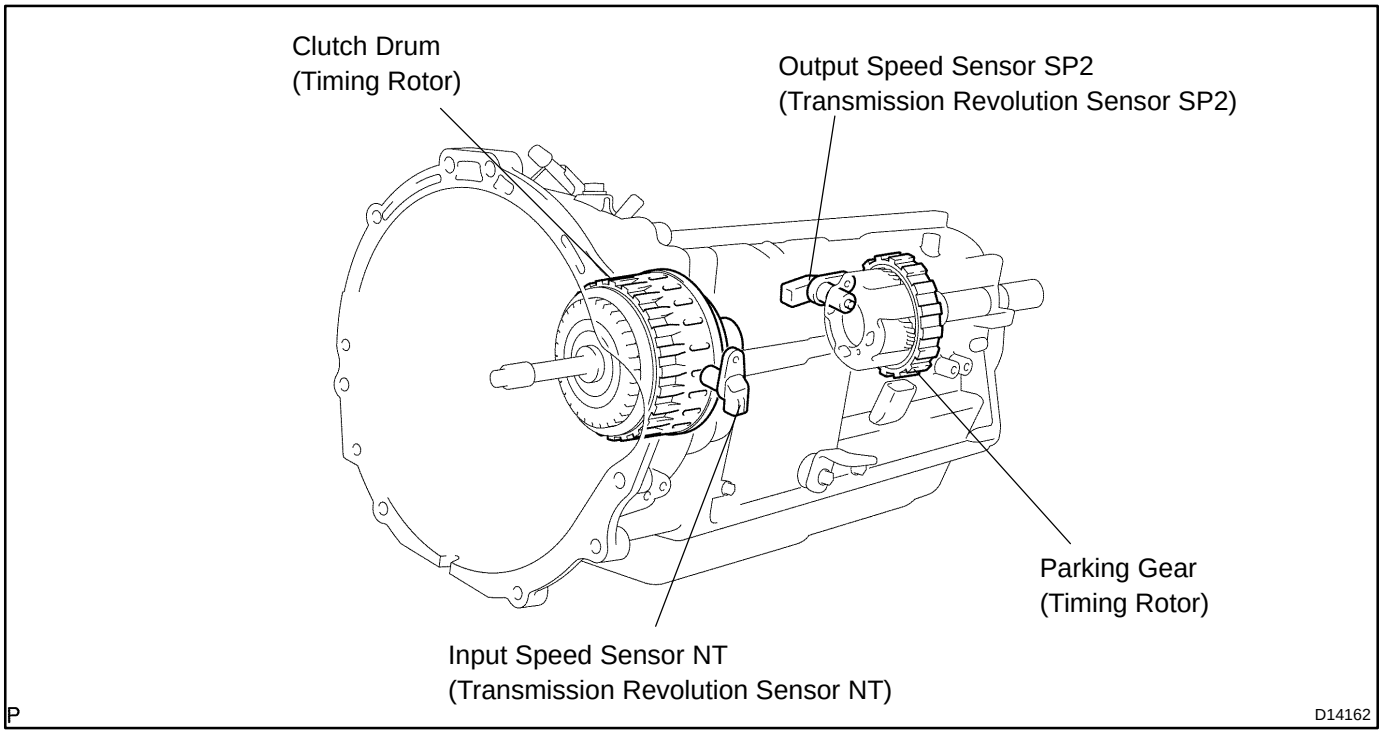

DTC No.	DTC Detection Condition	Trouble Area
P0717	All conditions below are detected for 5 secs. or more (1−trip detection logic) (a) Gear change is not performed (b) Gear position: 4th or 5th (c) T/M input shaft rpm: 300 rpm or less (d) T/M output shaft rpm: 1,000 rpm or more (e) Park/neutral position switch: • NSW input signal is OFF • R input signal is OFF • L input signal is OFF (f) Shift solenoid valves and park/neutral position switch are in normal operation	• Open or short in speed sensor (NT) circuit • Speed sensor (NT) • ECM • Automatic transmission (clutch, brake or gear, etc.)

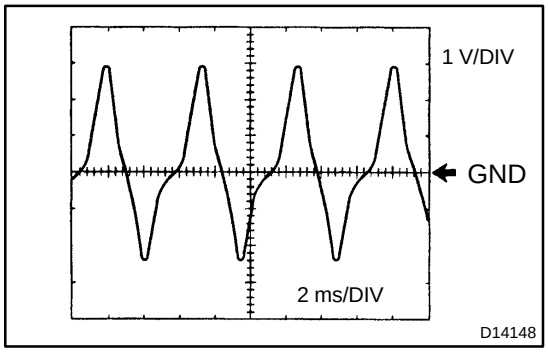

Reference (Using an oscilloscope):

Check the waveform between terminals NT+ and NT− of the ECM connector.

Standard: Refer to the illustration.

Terminal	NT+ − NT−
Tool setting	1V/DIV, 2ms/DIV
Vehicle condition	Engine idle speed (P or N position)

MONITOR DESCRIPTION

This DTC indicates that pulse is not output from the speed sensor NT (Turbine (input) speed sensor) or is output only little. The NT terminal of the ECM detects the revolving signal from the speed sensor (NT) (input RPM). The ECM outputs a gearshift signal comparing the input speed sensor (NT) with the output speed sensor (SP2).

While the vehicle is operating in the 4th or 5th gear position in the shift position of D, if the input shaft revolution is less than 300 rpm*1 although the output shaft revolution is more than 1000 rpm or more*2, the ECM detects the trouble, illuminates the MIL and stores the DTC.

*1: Pulse is not output or is irregularly output.

*2: The vehicle speed is approx. 50 km/h (31 mph) or more.

MONITOR STRATEGY

Related DTCs	P0717	Speed sensor (NT)/Verify pulse input
Required sensors/Components	Main	Speed sensor (NT)
	Sub	Speed sensor (NO)
Frequency of operation	Continuous	
Duration	5 sec.	
MIL operation	Immediate	
Sequence of operation	None	

TYPICAL ENABLING CONDITIONS

Item	Specification	
	Minimum	Maximum
The monitor will run whenever this DTC is not present.	See page DI−963	
Shift change	Shift change is completed and before starting next shift change operation	
ECM selected gear	4th or 5th	
Output shaft rpm	1,000 rpm or more	−
NSW switch	OFF	
R switch	OFF	
L switch	OFF	
Engine	Running	
Ignition switch	ON	
Starter	OFF	
NSW switch fail	Not detected	
Battery voltage	8 V or more	

TYPICAL MALFUNCTION THRESHOLDS

Detection criteria	Threshold
Sensor signal rpm	Less than 300 rpm

COMPONENT OPERATING RANGE

Parameter	Standard value
Speed sensor (NT)	Input speed is equal to engine speed when lock−up ON.

WIRING DIAGRAM

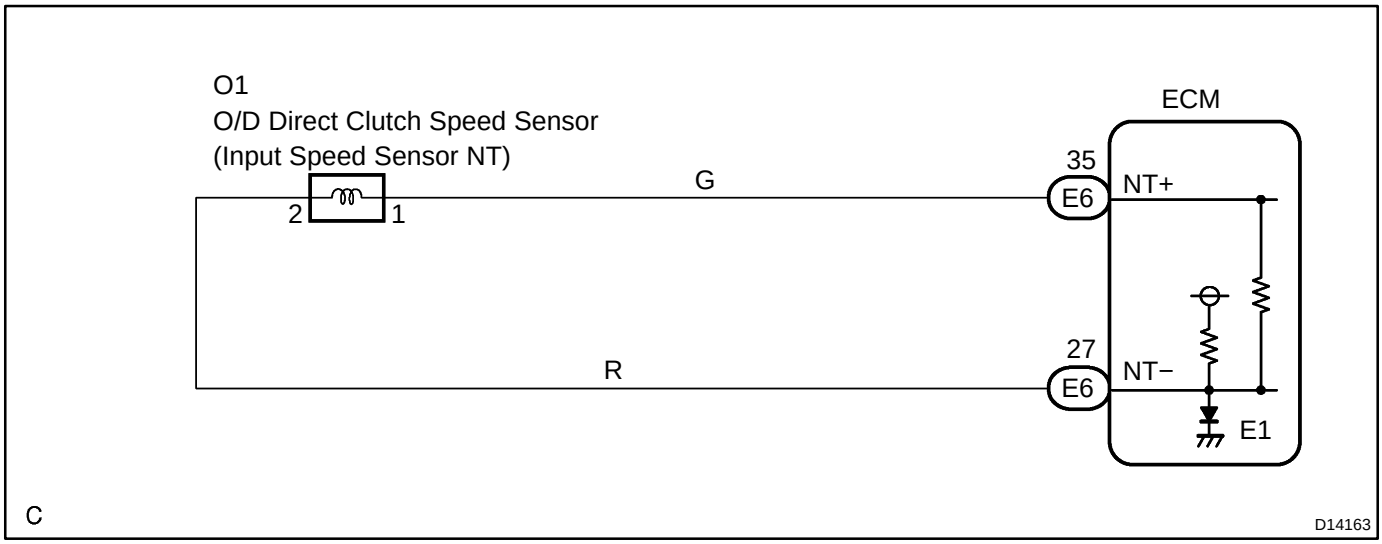

INSPECTION PROCEDURE

HINT:

According to the DATA LIST displayed by the OBD II scan tool or hand−held tester, you can read the value of the switch, sensor, actuator and so on without parts removal. Reading the DATA LIST as the first step of troubleshooting is one method to shorten labor time.

(a) Warm up the engine.
(b) Turn the ignition switch off.
(c) Connect the OBD II scan tool or hand−held tester to the DLC3.
(d) Turn the ignition switch to the ON position.
(e) Push the ”ON” button of the OBD II scan tool or the hand−held tester.
(f) When you use the hand−held tester:
Select the item ”DIAGNOSIS / ENHANCED OBD II / DATA LIST”.
(g) According to the display on the tester, read the ”DATA LIST”.

Item	Measurement Item/ Range (display)	Normal Condition
SPD (NT)	Input Turbine Speed/ display: 50 r/min	[HINT] • Lock−up ON (After warming up the engine); Input Turbine speed (NT) equal to the engine speed. • Lock−up OFF (Idling at N position); Input Turbine speed (NT) nearly equal to the engine speed.

HINT:

- SPD (NT) is always 0 while driving:
Open or short in the sensor or circuit.
- SPD (NT) is always more than 0 and less than 300 rpm while driving the vehicle at 50 km/h (31 mph) or more:
Sensor trouble, improper installation, or intermittent connection trouble of the circuit.

1	Inspect speed sensor installation.

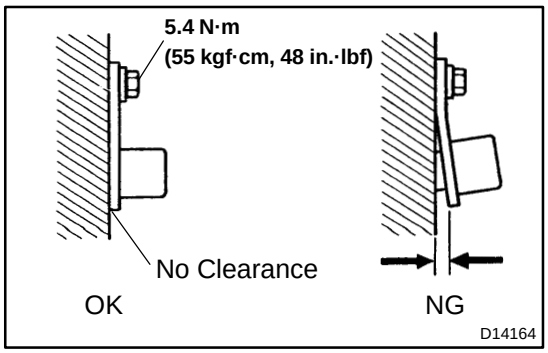

PREPARATION:
Jack up the vehicle.
CHECK:
Check the speed sensor (NT) installation.
OK:

The installation bolt is tightened properly and there is no clearance between the sensor and transmission case.
Torque: 5.4 N·m (55 kgf·cm, 48 in.·lbf)

NG	Replace speed sensor NT (See page AT−8).

OK

2	Inspect speed sensor NT.

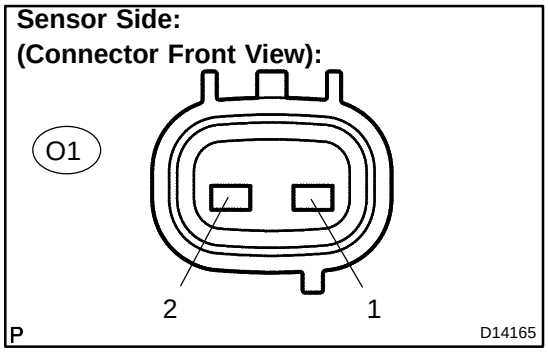

PREPARATION:
Disconnect the speed sensor connector from the transmission.
CHECK:
Measure the resistance according to the value(s) in the table below.
OK:

Tester Connection	Specified Condition 20 °C (68 °F)
1 − 2	560 to 680 Ω

NG	Replace speed sensor NT (See page AT−8).

OK

3	Check harness and connector (ECM − speed sensor NT).

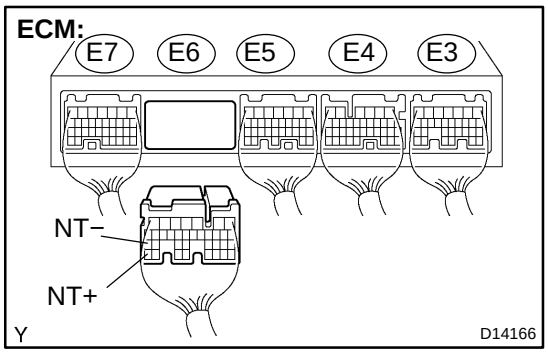

PREPARATION:

(a) Connect the speed sensor connector.

(b) Disconnect the ECM connector.

CHECK:

Measure the resistance according to the value(s) in the table below.

OK:

Tester Connection	Specified Condition 20°C (68°F)
E6 − 35 (NT+) − E6 − 27 (NT−)	560 to 680 Ω

CHECK:

Measure the resistance according to the value(s) in the table below.

OK:

Tester Connection	Specified Condition
E6 − 35 (NT+) − Body ground	10 kΩ or higher
E6 − 27 (NT−) − Body ground	↑

NG → **Repair or replace harness or connector (See page IN−30).**

OK →

Replace the ECM (See page SF−66).

DIDVC−01

DTC	P0722	Output Speed Sensor Circuit No Signal

CIRCUIT DESCRIPTION

The speed sensor SP2 detects the rotation speed of the transmission output shaft and sends signals to the ECM. The ECM determines the vehicle speed based on these signals. An AC voltage is generated in the speed sensor SP2 coil as the parking gear mounted on the rear planetary gear assy rotates, and this voltage is sent to the ECM. The parking gear on the rear planetary gear is used as the timing rotor for this sensor. The gear shift point and lock−up timing are controlled by the ECM based on the signals from this vehicle speed sensor and the throttle position sensor signal.

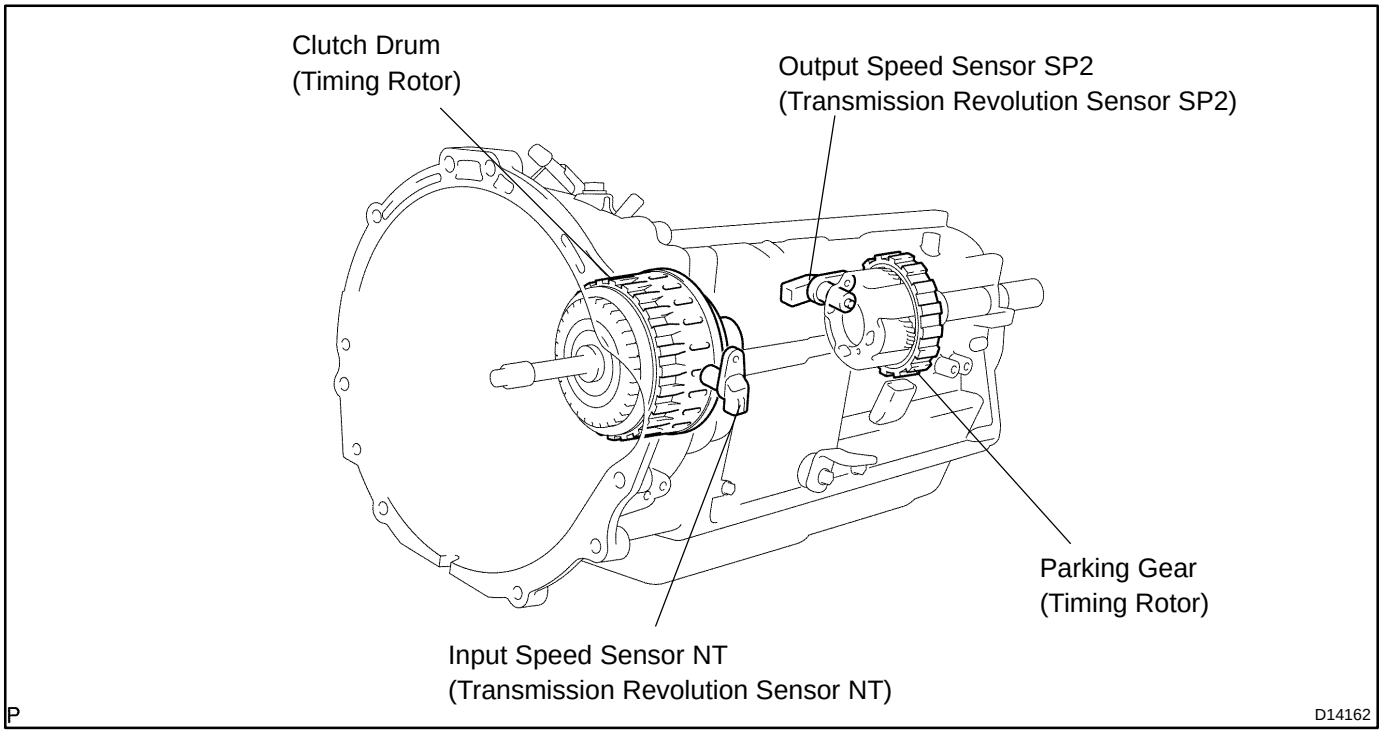

DTC No.	DTC Detection Condition	Trouble Area
P0722	All conditions below are detected 500 times or more continuously (1−trip detection logic) (a) No signal from speed sensor (SP2) is input to ECM while 4 pulses of No. 1 vehicle speed sensor signal are sent (b) Vehicle speed is 9 km/h (6 mph) or more for at least 4 sec. (c) Park/neutral position switch is OFF. (d) Transfer position is except neutral (4WD).	• Open or short in speed sensor (SP2) circuit • Speed sensor (SP2) • ECM • Automatic transmission (clutch, brake or gear, etc.)

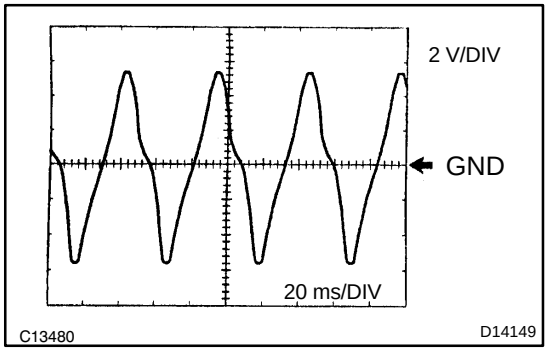

Reference (Using an oscilloscope):

Check the waveform between terminals SP2+ and SP2− of the ECM connector.

Standard: Refer to the illustration.

Terminal	SP2+ − SP2−
Tool setting	2V/DIV, 20ms/DIV
Vehicle condition	Vehicle speed 20 km/h (12 mph)

MONITOR DESCRIPTION

The output speed sensor SP2 monitors the output shaft speed. The ECM controls the gearshift point and the lock up timing based on the signals from the output speed sensor SP2 and throttle position sensor.
If the ECM detects no signal from the output shaft speed sensor SP2 even while the vehicle is moving, it will conclude that is a malfunction of the output speed sensor SP2. The ECM will illuminate the MIL and set a DTC.

MONITOR STRATEGY

Related DTCs	P0722	Speed sensor SP2/Verify pulse input
Required sensors/Components	Speed sensor SP2	
Frequency of operation	Continuous	
Duration	500 output shaft revolution	
MIL operation	Immediate	
Sequence of operation	None	

TYPICAL ENABLING CONDITIONS

Item	Specification	
	Minimum	Maximum
The monitor will run whenever this DTC is not present.	See page DI−963	
Vehicle speed sensor pulse input	4	
Vehicle speed range (4 sec. or more)	9 km/h (5.59 mph) or more	−
NSW switch	OFF	
Battery voltage	8 V or more	−
Ignition switch	ON	
Starter	OFF	

TYPICAL MALFUNCTION THRESHOLDS

Detection criteria	Threshold
Output speed sensor pulse input	No input

WIRING DIAGRAM

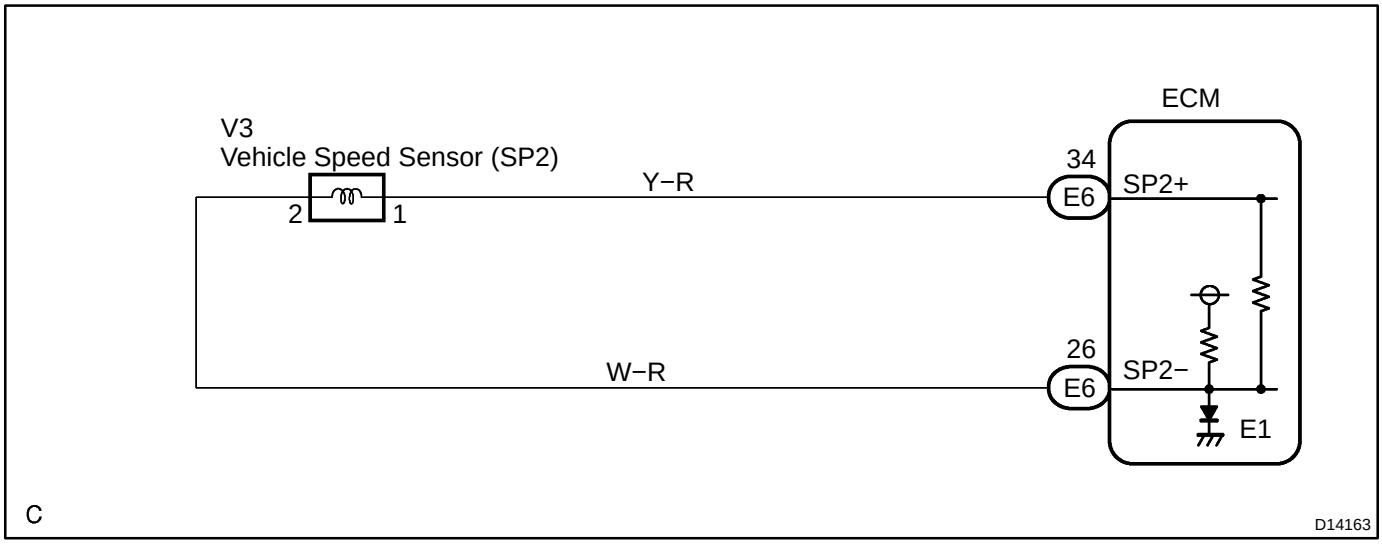

INSPECTION PROCEDURE

HINT:

According to the DATA LIST displayed by the OBD II scan tool or hand−held tester, you can read the value of the switch, sensor, actuator and so on without parts removal. Reading the DATA LIST as the first step of troubleshooting is one method to shorten labor time.

(a) Warm up the engine.
(b) Turn the ignition switch off.
(c) Connect the OBD II scan tool or hand−held tester to the DLC3.
(d) Turn the ignition switch to the ON position.
(e) Push the ”ON” button of the OBD II scan tool or the hand−held tester.
(f) When you use the hand−held tester:
Select the item ”DIAGNOSIS / ENHANCED OBD II / DATA LIST”.
(g) According to the display on the tester, read the ”DATA LIST”.

Item	Measurement Item/ Range (display)	Normal Condition
SPD (SP2)	Output shaft Speed/ min.: 0 km/h (0 mph) max.: 255 km/h (158 mph)	Vehicle stopped: 0 km/h (0 mph) [HINT] Equal to vehicle speed

HINT:

- SPD (SP2) is always 0 while driving:
Open or short in the sensor or circuit.
- SPD (SP2) is always more than 0 and less than 300 rpm while driving the vehicle at 50 km/h (31 mph) or more:
Sensor trouble, improper installation, or intermittent connection trouble of the circuit.

1	**Inspect speed sensor installation.**

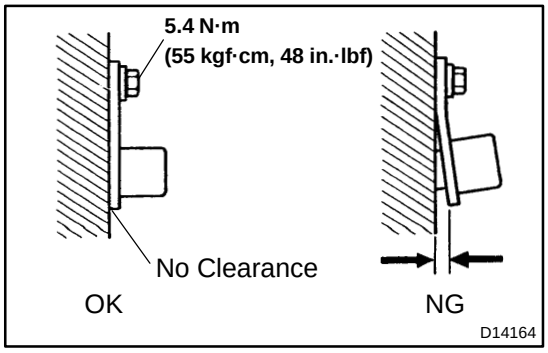

PREPARATION:

Jack up the vehicle.

CHECK:

Check the speed sensor (SP2) installation.

OK:

The installation bolt is tightened properly and there is no clearance between the sensor and transmission case.
Torque: 5.4 N·m (55 kgf·cm, 48 in.·lbf)

NG → **Replace speed sensor SP2 (See page AT−8).**

OK

2	Inspect speed sensor SP2.

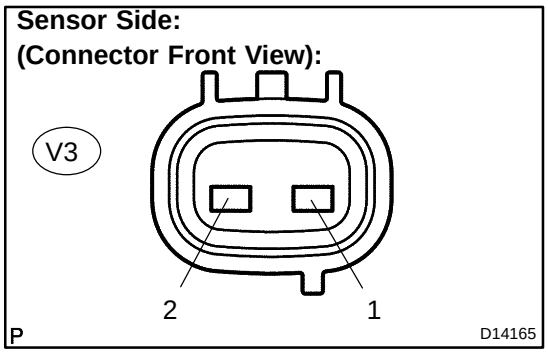

PREPARATION:

Disconnect the speed sensor connector from the transmission.

CHECK:

Measure the resistance according to the value(s) in the table below.

OK:

Tester Connection	Specified Condition 20 °C (68 °F)
1 − 2	560 to 680 Ω

NG → **Replace speed sensor SP2 (See page AT−8).**

OK

3	Check harness and connector (ECM − speed sensor SP2).

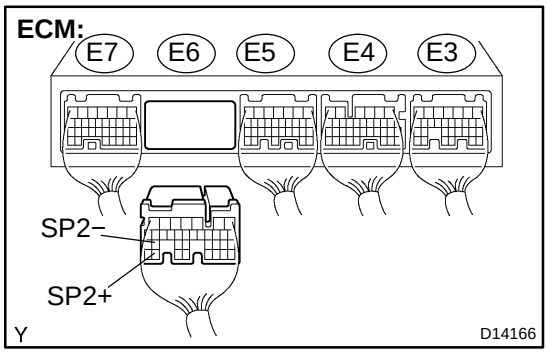

PREPARATION:

(a) Connect the speed sensor connector.

(b) Disconnect the ECM connector.

CHECK:

Measure the resistance according to the value(s) in the table below.

OK:

Tester Connection	Specified Condition 20°C (68°F)
E6 − 34 (SP2+) − E6 − 26 (SP2−)	560 to 680 Ω

CHECK:

Measure the resistance according to the value(s) in the table below.

OK:

Tester Connection	Specified Condition
E6 − 34 (SP2+) − Body ground	10 kΩ or higher
E6 − 26 (SP2−) − Body ground	↑

NG → **Repair or replace harness or connector (See page IN−30).**

OK

Replace the ECM (See page SF−66).

DIDVD−01

DTC	P0724	Brake Switch ”B” Circuit High

CIRCUIT DESCRIPTION

The purpose of this circuit is to prevent the engine from stalling while driving in lock−up condition when brakes are suddenly applied.
When the brake pedal is depressed, this switch sends a signal to the ECM. Then the ECM cancels the operation of the lock−up clutch while braking is in progress.

DTC No.	DTC Detection Condition	Trouble Area
P0724	The stop light switch remains ON even when the vehicle is driven in a STOP (less than 3 km/h (2 mph)) and GO (30 km/h (19 mph) or more) fashion 5 times. (2−trip detection logic).	• Short in stop light switch signal circuit • Stop light switch • ECM

MONITOR DESCRIPTION

This DTC indicates that the stop light switch remains on. When the stop light switch remains ON during ”stop and go” driving, the ECM interprets this as a fault in the stop light switch and the MIL comes on and the ECM stores the DTC. The vehicle must stop (less than 3 km/h (2 mph)) and go (30 km/h (19 mph) or more) ten times for two driving cycles in order to detect a malfunction.

MONITOR STRATEGY

Related DTCs	P0724	Stop light switch/Range check/Rationality
Required sensors/Components	Main	Stop light switch
	Sub	Vehicle speed sensor
Frequency of operation	Continuous	
Duration	GO and STOP 5 times	
MIL operation	2 driving cycles	
Sequence of operation	None	

TYPICAL ENABLING CONDITIONS

Item	Specification	
	Minimum	Maximum
The monitor will run whenever this DTC is not present.	See page DI−963	
Battery voltage	8 V or more	−
Ignition switch	ON	
Starter	OFF	
GO (Vehicle speed is 30 km/h (18.63 mph) or more)	Once	
STOP (Vehicle speed is less than 3 km/h (1.86 mph))	Once	

TYPICAL MALFUNCTION THRESHOLDS

Detection criteria	Threshold
Brake switch	Remain ON during GO and STOP 5 times

WIRING DIAGRAM

See page DI−261.

INSPECTION PROCEDURE

1	**Read value of DATA LIST (STP signal).**

HINT:

According to the DATA LIST displayed by the OBD II scan tool or hand−held tester, you can read the value of the switch, sensor, actuator and so on without parts removal. Reading the DATA LIST as the first step of troubleshooting is one method to shorten labor time.

(a) Warm up the engine.
(b) Turn the ignition switch off.
(c) Connect the OBD II scan tool or hand−held tester to the DLC3.
(d) Turn the ignition switch to the ON position.
(e) Push the ”ON” button of the OBD II scan tool or the hand−held tester.
(f) When you use the hand−held tester:
Select the item ”DIAGNOSIS / ENHANCED OBD II / DATA LIST”.
(g) According to the display on the tester, read the ”DATA LIST”.
Standard:

Item	Measurement Item/ Range (display)	Normal Condition
Stop Light Switch	Stop light SW Status/ ON or OFF	• Brake Pedal is depressed: ON • Brake Pedal is released: OFF

NOTICE:

In the table above, the conditions listed under ”Normal Condition” are reference conditions. Do not depend solely on these reference conditions when deciding whether a part is faulty or not.

OK:

Brake Pedal Condition	Specified Condition
Depressed	ON
Released	OFF

NG → **Go to step 2.**

OK

Go to step 3.

2	Inspect stop light switch.

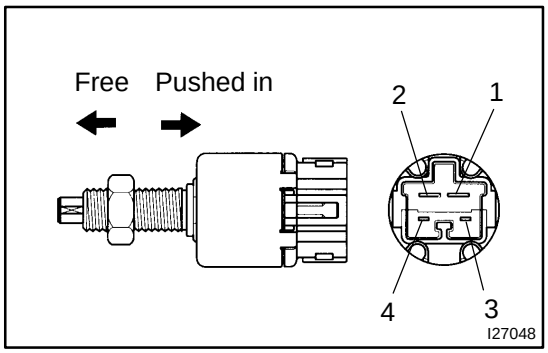

PREPARATION:
Remove the stop lamp switch assy.
CHECK:
Measure the resistance according to the value(s) in the table below.
OK:

Switch position	Tester Connection	Specified Condition
Switch pin free	1 − 2	Below 1 Ω
Switch pin pushed in	↑	10 kΩ or higher
Switch pin free	3 − 4	10 kΩ or higher
Switch pin pushed in	↑	Below 1 Ω

NG → **Replace stop light switch.**

OK

3	Check harness and connector (ECM − stop light switch).

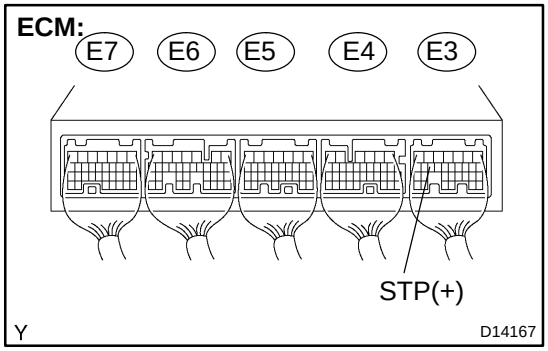

PREPARATION:
Install the stop lamp switch assy.
CHECK:
Measure the voltage according to the value(s) in the table below when the brake pedal is depressed and released.
OK:

Condition	Tester Connection	Specified Condition
Brake pedal is depressed	E3 − 15 (STP) − Body ground	10 to 14 V
Brake pedal is released	↑	Below 1 V

NG → **Repair or replace harness or connector (See page IN−30).**

OK

Replace the ECM (See page SF−66).

DTC	P0748	Pressure Control Solenoid ”A” Electrical (Shift Solenoid Valve SL1)

CIRCUIT DESCRIPTION

Shifting from 1st to 5th is performed in combination with ”ON” and ”OFF” operation of the shift solenoid valves SL1, SL2, S1, S2 and SR which are controlled by the ECM. If an open or short circuit occurs in either of the shift solenoid valves, the ECM controls the remaining normal shift solenoid valves to allow the vehicle to be operated smoothly (See page DI−985).

DTC No.	DTC Detection Condition	Trouble Area
P0748	ECM checks for an open or short circuit in shift solenoid valves SL1 (1−trip detection logic) (a) When solenoid, duty ratio equal to 100% (b) When solenoid is not energized, duty ratio is less than 3%	• Open or short in shift solenoid valve SL1 circuit • Shift solenoid valve SL1 • ECM

MONITOR DESCRIPTION

This DTC indicates an open or short in the shift solenoid valve SL1 circuit. The ECM commands gearshift by turning the shift solenoid valves ”ON/OFF”. When there is an open or short circuit in any shift solenoid valve circuit, the ECM detects the problem and illuminates the MIL and stores the DTC. And the ECM performs the fail−safe function and turns the other normal shift solenoid valves ”ON/OFF”. (In case of an open or short circuit, the ECM stops sending current to the circuit.)
While driving and shifting between 4th and 5th gears, if the ECM detects an open or short in the shift solenoid valve SL1 circuit, the ECM determines there is a malfunction (See page DI−985).

MONITOR STRATEGY

Related DTCs	P0748	Shift solenoid valve SL1/Range check
Required sensors/Components	Shift solenoid valve SL1	
Frequency of operation	Continuous	
Duration	1 sec.	
MIL operation	Immediate	
Sequence of operation	None	

TYPICAL ENABLING CONDITIONS

Item	Specification	
	Minimum	Maximum
The monitor will run whenever this DTC is not present.	See page DI−963	
Battery voltage	10 V or more	−
CPU commanded duty	−	Less than 75%
Ignition switch	ON	
Switch	OFF	

TYPICAL MALFUNCTION THRESHOLDS

Detection criteria	Threshold
Output signal duty	100%

COMPONENT OPERATING RANGE

Parameter	Standard value
Output signal duty	Less than 100%

WIRING DIAGRAM

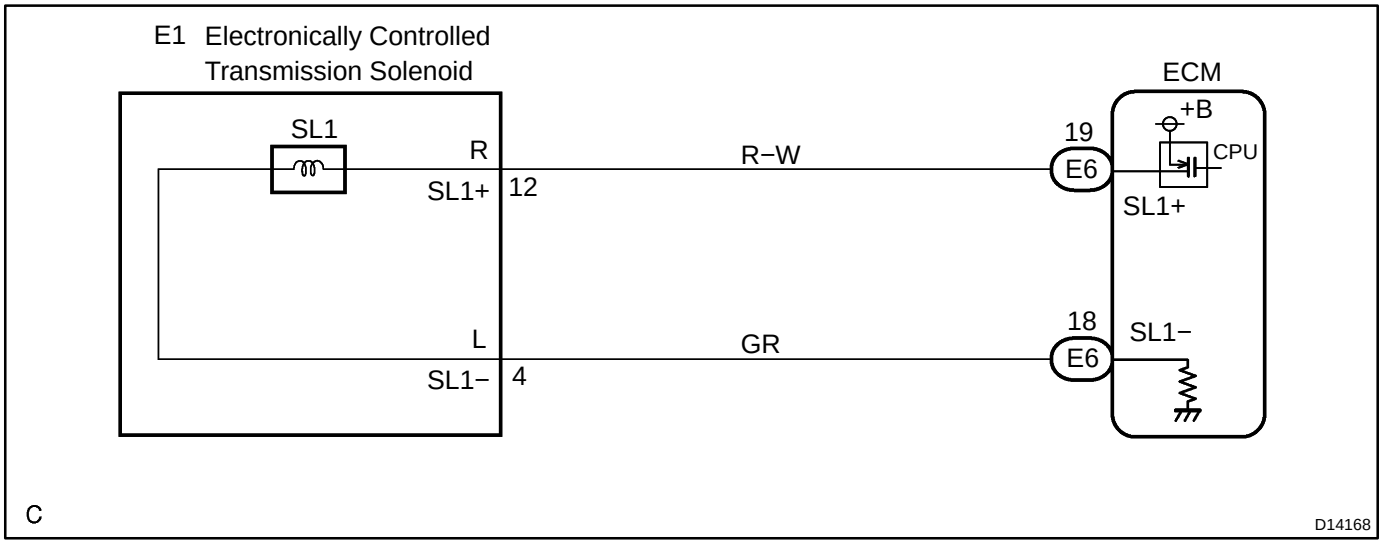

INSPECTION PROCEDURE

HINT:

- The shift solenoid valve SL1 is turned on/off normally when the shift lever is in the D position:

ECM command gearshift	1st	2nd	3rd	4th	5th
Shift solenoid valve SL1	OFF	OFF	OFF	OFF	ON

1	**Inspect transmission wire.**

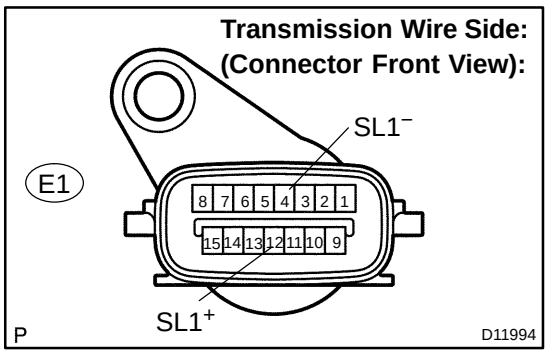

PREPARATION:

Disconnect the transmission wire connector.

CHECK:

Measure the resistance according to the value(s) in the table below.

OK:

Tester Connection	Specified Condition 20°C (68°F)
12 (SL1+) − 4 (SL1−)	5.0 to 5.6 Ω

CHECK:

Measure the resistance according to the value(s) in the table below.

OK:

Tester Connection	Specified Condition
12 (SL1+) − Body ground	10 kΩ or higher
4 (SL1−) − Body ground	↑

NG → **Go to step 3.**

OK

2	Check harness and connector (Transmission wire − ECM)

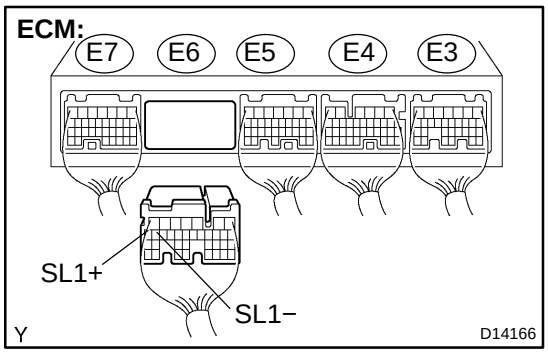

PREPARATION:

(a) Connect the transmission wire connector.

(b) Disconnect the ECM connector.

CHECK:

Measure the resistance according to the value(s) in the table below.

OK:

Tester Connection	Specified Condition 20°C (68°F)
E6 − 19 (SL1+) − E6 − 18 (SL1−)	5.0 to 5.6 Ω

CHECK:

Measure the resistance according to the value(s) in the table below.

OK:

Tester Connection	Specified Condition
E6 − 19 (SL1+) − Body ground	10 kΩ or higher
E6 − 18 (SL1−) − Body ground	↑

NG → **Repair or replace the harness or connector (See page IN−30).**

OK

Replace the ECM (See page SF−66).

3	Inspect shift solenoid valve SL1.

Shift Solenoid Valve SL1:

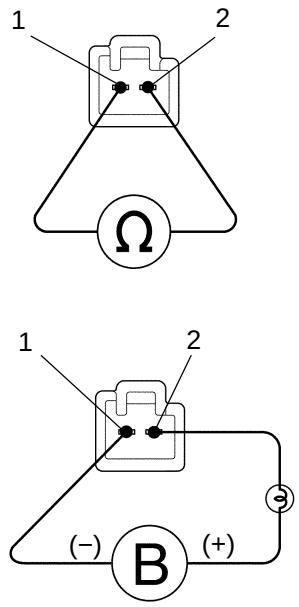

D12795

PREPARATION:

Remove the shift solenoid valve SL1 (See page AT−12).

CHECK:

Measure the resistance according to the value(s) in the table below.

OK:

Tester Connection	Specified Condition 20°C (68°F)
1 − 2	5.0 to 5.6 Ω

CHECK:

Connect the positive (+) lead with a 21 W bulb to terminal 2 and the negative (−) lead to terminal 1 of the solenoid valve connector, then check the movement of the valve.

OK:

The solenoid makes an operating sound.

NG → **Replace the shift solenoid valve SL1 (See page AT−12).**

OK

Repair or replace the transmission wire (See page AT−9).

DIDVF−01

DTC	P0751	Shift Solenoid ”A” Performance (Shift Solenoid Valve S1)

SYSTEM DESCRIPTION

The ECM uses signals from the output shaft speed sensor and input speed sensor to detect the actual gear position (1st, 2nd, 3rd, 4th or 5th gear).
Then the ECM compares the actual gear with the shift schedule in the ECM memory to detect mechanical problems of the shift solenoid valves, valve body or automatic transmission (clutch, brake or gear, etc.).

DTC No.	DTC Detection Condition	Trouble Area
P0751	The gear required by the ECM does not match the actual gear when driving (2−trip detection logic)	• Shift solenoid valve S1 remains open or closed • Valve body is blocked • Automatic transmission (clutch, brake or gear, etc.)

MONITOR DESCRIPTION

This DTC indicates ”stuck ON malfunction” or ”stuck OFF malfunction” of the shift solenoid valve S1.
The ECM commands gear shifts by turning the shift solenoid valves ”ON/OFF”. When the gear position commanded by the ECM and the actual gear position are not the same, the ECM illuminates the MIL and stores the DTC.

MONITOR STRATEGY

Related DTCs	P0751	Shift solenoid valve S1/OFF malfunction
		Shift solenoid valve S1/ON malfunction
Required sensors/Components	Main	Shift solenoid valve S1
	Sub	Vehicle speed sensor, Throttle position sensor, Speed sensor (NT), Speed sensor (NO)
Frequency of operation	Continuous	
Duration	OFF malfunction (A) and (B)	0.4 sec.
	OFF malfunction (C)	Immediate
	ON malfunction (A), (B) and (C)	0.4 sec.
	ON malfunction (D)	3 sec.
	ON malfunction (E)	0.5 sec.
MIL operation	2 driving cycles	
Sequence of operation	None	

TYPICAL ENABLING CONDITIONS

Item	Specification	
	Minimum	Maximum
All:		
Turbine speed sensor circuit	Not circuit malfunction	
Output speed sensor circuit	Not circuit malfunction	
Shift solenoid valve S1 circuit	Not circuit malfunction	
Shift solenoid valve S2 circuit	Not circuit malfunction	
Shift solenoid valve SR circuit	Not circuit malfunction	
Shift solenoid valve SL1 circuit	Not circuit malfunction	
Shift solenoid valve SL2 circuit	Not circuit malfunction	
ECT (Engine coolant temperature) sensor circuit	Not circuit malfunction	
KCS sensor circuit	Not circuit malfunction	
ETCS (Electric throttle control system)	Not system down	
Transmission range	”D”	
ECT	40˚C (104˚F) or more	−
Spark advance from Max. retard timing by KCS control	0˚ CA or more	−
Engine	Starting	
Transfer range	”HIGH”*1	
Transfer range ”HIGH” *1 (This condition is applied only 4WD)		
*1 Following conditions met		
Vehicle speed sensor circuit	Not circuit malfunction	
Output shaft speed sensor circuit	Not circuit malfunction	
Transfer output speed	143 rpm or more	−
NO/NOtf (Transfer input speed/Transfer output speed)	0.9 to 1.1	
OFF malfunction (A)		
ECM selected gear	1st	
Vehicle speed	2 to 40 km/h (1.2 to 24.9 mph)	
Throttle valve opening angle	8% or more 6.5% or more at 2,000 rpm (Conditions vary with engine speed)	−
OFF malfunction (B)		
Current ECM selected gear	5th	
Last ECM selected gear	4th	
Continuous time for ECM selecting 4th gear	2 sec. or more	−
Actual gear when ECM selected 4th gear	4th	
OFF malfunction (C)		
Current ECM selected gear	5th	
Last ECM selected gear	4th	
ON malfunction (A)		
ECM selected gear	1st	
Vehicle speed	2 to 40 km/h (1.2 to 24.9 mph)	

Throttle valve opening angle	6.5% or more at 2,000 rpm (Conditions vary with engine speed)	−
ON malfunction (B)		
ECM selected gear	4th	
Vehicle speed	2 km/h (1.2 mph) or more	−
Throttle valve opening angle	6.5% or more at 2,000 rpm (Conditions vary with engine speed)	−
ON malfunction (C)		
ECM selected gear	3rd	
Vehicle speed	2 km/h (1.2 mph) or more	−
Throttle valve opening angle	6.5% or more at 2,000 rpm (Conditions vary with engine speed)	−
ON malfunction (D)		
Current ECM selected gear	5th	
Last ECM selected gear	4th	
Vehicle speed (During transition from 4th to 5th gear)	−	Less than 100 km/h (62.2 mph)
ON malfunction (E)		
ECM selected gear	5th	
Engine speed − Turbine speed (NE − NT) (After transition from 4th to 5th gear)	−	Less than 150 rpm
Vehicle speed (After transition from 4th to 5th gear)	−	Less than 100 km/h (62.2 mph)

TYPICAL MALFUNCTION THRESHOLDS

Detection criteria	Threshold
[OFF malfunction]	
All of the following conditions are met: Conditions (A), (B) and (C)	
2 detections are necessary per driving cycle 1st detection; temporary flag ON 2nd detection; pending fault code ON	
OFF malfunction (A)	
Turbine speed/Output speed	0.93 to 1.07
OFF malfunction (B)	
Turbine speed/Output speed	0.65 to 0.79
OFF malfunction (C)	
Output record from ECM for 4th → 5th upshifting	Recorded
[ON malfunction]	
Either of the following conditions is met: **• ON malfunction (A) and (B)** **• ON malfunction (B) or (C), and ON malfunction (D) or (E)**	
ON malfunction (A) and (B)	
Turbine speed/Output speed	3.30 to 7.50
ON malfunction (C)	
Turbine speed/Output speed	1.91 to 2.35
ON malfunction (D)	
Turbine speed − Output speed x 4th gear ratio (NT − NO x 4th gear ratio)	1,000 rpm or more

ON malfunction (E)	
Turbine speed − Output speed x 5th gear ratio (NT − NO x 5th gear ratio)	1,000 rpm or more

INSPECTION PROCEDURE

HINT:

Performing the ACTIVE TEST using the hand−held tester allows the relay, VSV, actuator and so on to operate without parts removal. Performing the ACTIVE TEST as the first step of troubleshooting is one method to shorten labor time.

It is possible to display the DATA LIST during the ACTIVE TEST.

(a) Warm up the engine.
(b) Turn the ignition switch off.
(c) Connect the hand−held tester to the DLC3.
(d) Turn the ignition switch to the ON position.
(e) Turn on the tester.
(f) Select the item ”DIAGNOSIS / ENHANCED OBD II / ACTIVE TEST”.
(g) According to the display on the tester, perform the ”ACTIVE TEST”.

HINT:

While driving, the shift position can be forcibly changed with the hand−held tester.

Comparing the shift position commanded by the ACTIVE TEST with the actual shift position enables you to confirm the problem (See page DI−985).

Item	Test Details	Diagnostic Note
SHIFT	[Test Details] Operate the shift solenoid valve and set each shift position by yourself. [Vehicle Condition] Less than 50 km/h (31 mph) [Others] • Press ”→” button: Shift up • Press ”←” button: Shift down	Possible to check the operation of the shift solenoid valves.

HINT:

- This test can be conducted when the vehicle speed is 50 km/h (31 mph) or less.
- The 4th to 5th up−shiftings must be performed with the accelerator pedal released.
- The 5th to 4th down−shiftings must be performed with the accelerator pedal released.
- Do not operate the accelerator pedal for at least 2 seconds after shifting and do not shift successively.
- The shift position commanded by the ECM is shown in the DATA LIST (SHIFT) display on the hand−held tester.
- The shift solenoid valve S1 is turned on/off normally when the shift lever is in the D position:

ECM command gearshift	1st	2nd	3rd	4th	5th
Shift solenoid valve S1	ON	ON	OFF	OFF	OFF

1	**Check other DTCs output (in addition to DTC P0751).**

PREPARATION:

(a) Turn the ignition switch off.
(b) Connect the OBD II scan tool or hand−held tester to the DLC3.
(c) Turn the ignition switch to the ON position.
(d) Turn on the tester.
(e) Select the item ”DIAGNOSIS / ENHANCED OBD II / DTC INFO / CURRENT CODES”.

CHECK:

Read the DTCs using the OBD II scan tool or the hand−held tester.

RESULT:

Display (DTC output)	Proceed to
Only ”P0751” is output	A
”P0751” and other DTCs	B

HINT:

If any other codes besides ”P0751” are output, perform troubleshooting for those DTCs first.

B → **Go to DTC chart (See page DI−991).**

A

2	**Check shift solenoid valve S1 operation.**

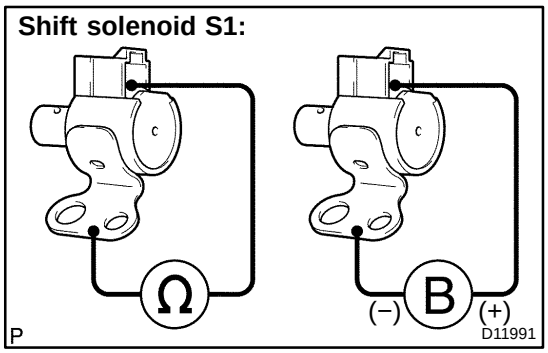

PREPARATION:

Remove the shift solenoid valve S1 (See page AT−12).

CHECK:

Measure the resistance according to the value(s) in the table below.

OK:

Tester Connection	Specified Condition 20°C (68°F)
Solenoid Connector (S1) − Solenoid Body (S1)	11 to 15 Ω

CHECK:

Connect the positive (+) lead to the terminal of the solenoid connector, and the negative (−) lead to the solenoid body.

OK:

The solenoid makes an operating sound.

NG → **Replace shift solenoid valve S1 (See page AT−12).**

OK

3	**Inspect valve body (See page AT−12).**

OK:

There are no foreign objects on each valve.

NG → **Repair or replace valve body.**

OK

Repair or replace transmission (See page AT−26).

DIDVG−01

DTC	P0756	Shift Solenoid ”B” Performance (Shift Solenoid Valve S2)

SYSTEM DESCRIPTION

The ECM uses signals from the output shaft speed sensor and input speed sensor to detect the actual gear position (1st, 2nd, 3rd, 4th or 5th gear).
Then the ECM compares the actual gear with the shift schedule in the ECM memory to detect mechanical problems of the shift solenoid valves, valve body or automatic transmission (clutch, brake or gear, etc.).

DTC No.	DTC Detection Condition	Trouble Area
P0756	The gear required by the ECM does not match the actual gear when driving (2−trip detection logic)	• Shift solenoid valve S2 remains open or closed • Valve body is blocked • Automatic transmission (clutch, brake or gear, etc.)

MONITOR DESCRIPTION

This DTC indicates ”stuck ON malfunction” or ”stuck OFF malfunction” of the shift solenoid valve S2.
The ECM commands gear shifts by turning the shift solenoid valves ”ON/OFF”. When the gear position commanded by the ECM and the actual gear position are not the same, the ECM illuminates the MIL and stores the DTC.

MONITOR STRATEGY

Related DTCs	P0756	Shift solenoid valve S2/OFF malfunction
		Shift solenoid valve S2/ON malfunction
Required sensors/Components	Main	Shift solenoid valve S2
	Sub	Vehicle speed sensor, Throttle position sensor, Speed sensor (NT), Speed sensor (NO)
Frequency of operation	Continuous	
Duration	OFF malfunction (A), (B), (C)	0.4 sec.
	OFF malfunction (D)	Immediate
	ON malfunction (A) and (B)	0.4 sec.
	ON malfunction (C)	3 sec.
	ON malfunction (D)	0.5 sec.
MIL operation	2 driving cycles	
Sequence of operation	None	

TYPICAL ENABLING CONDITIONS

Item	Specification	
	Minimum	Maximum
All:		
Turbine speed sensor circuit	Not circuit malfunction	
Output speed sensor circuit	Not circuit malfunction	
Shift solenoid valve S1 circuit	Not circuit malfunction	
Shift solenoid valve S2 circuit	Not circuit malfunction	
Shift solenoid valve SR circuit	Not circuit malfunction	
Shift solenoid valve SL1 circuit	Not circuit malfunction	
Shift solenoid valve SL2 circuit	Not circuit malfunction	
ECT (Engine coolant temperature) sensor circuit	Not circuit malfunction	
KCS sensor circuit	Not circuit malfunction	
ETCS (Electric throttle control system)	Not system down	
Transmission range	”D”	
ECT	40˚C (104˚F) or more	−
Spark advance from Max. retard timing by KCS control	0˚ CA or more	−
Engine	Starting	
Transfer range	”HIGH”*1	
Transfer range ”HIGH” *1 (This condition is applied only 4WD)		
*1 Following conditions met		
Vehicle speed sensor circuit	Not circuit malfunction	
Output shaft speed sensor circuit	Not circuit malfunction	
Transfer output speed	143 rpm or more	−
NO/NOtf (Transfer input speed/Transfer output speed)	0.9 to 1.1	
OFF malfunction (A)		
ECM selected gear	1st	
Vehicle speed	2 to 40 km/h (1.2 to 24.9 mph)	
Throttle valve opening angle	6.5% or more at 2,000 rpm (Conditions vary with engine speed)	−
OFF malfunction (B)		
ECM selected gear	2nd	
Vehicle speed	2 km/h (1.2 mph) or more	−
Output speed	2nd → 1st down shift point or more	−
Throttle valve opening angle	6.5% or more at 2,000 rpm (Conditions vary with engine speed)	−
OFF malfunction (C)		
Current ECM selected gear	5th	
Last ECM selected gear	4th	
Continuous time for ECM selecting 4th gear	2 sec. or more	−
Actual gear when ECM selected 4th gear	4th	

OFF malfunction (D)		
Current ECM selected gear	5th	
Last ECM selected gear	4th	
ON malfunction (A)		
ECM selected gear	1st	
Vehicle speed	2 to 40 km/h (1.2 to 24.9 mph)	
Throttle valve opening angle	6.5% or more at 2,000 rpm (Conditions vary with engine speed)	−
ON malfunction (B)		
ECM selected gear	4th	
Vehicle speed	2 km/h (1.2 mph) or more	−
Throttle valve opening angle	6.5% or more at 2,000 rpm (Conditions vary with engine speed)	−
ON malfunction (C)		
Current ECM selected gear	5th	
Last ECM selected gear	4th	
Vehicle speed (During transition from 4th to 5th gear)	−	Less than 100 km/h (62 mph)
ON malfunction (D)		
ECM selected gear	5th	
Engine speed − Turbine speed (NE − NT) (After transition from 4th to 5th gear)	−	Less than 150 rpm
Vehicle speed (After transition from 4th to 5th gear)	−	Less than 100 km/h (62 mph)

TYPICAL MALFUNCTION THRESHOLDS

Detection criteria	Threshold
[OFF malfunction]	
All of the following conditions are met: Conditions (A), (B), (C) and (D)	
2 detections are necessary per driving cycle 1st detection; temporary flag ON 2nd detection; pending fault code ON	
OFF malfunction (A) and (B)	
Turbine speed/Output speed	3.30 to 7.50
OFF malfunction (C)	
Turbine speed/Output speed	0.65 to 0.79
OFF malfunction (D)	
Output record from ECM for 4th → 5th upshifting	Recorded
[ON malfunction]	
Both of the following conditions are met: ON malfunction (A) or (B), and ON malfunction (C) or (D)	
ON malfunction (A)	
Turbine speed/Output speed	1.91 to 2.35
ON malfunction (B)	
Turbine speed/Output speed	1.28 to 1.53
ON malfunction (C)	
Turbine speed − Output speed x 4th gear ratio (NT − NO x 4th gear ratio)	1,000 rpm or more

ON malfunction (E)	
Turbine speed − Output speed x 5th gear ratio (NT − NO x 5th gear ratio)	1,000 rpm or more

INSPECTION PROCEDURE

HINT:

Performing the ACTIVE TEST using the hand−held tester allows the relay, VSV, actuator and so on to operate without parts removal. Performing the ACTIVE TEST as the first step of troubleshooting is one method to shorten labor time.

It is possible to display the DATA LIST during the ACTIVE TEST.

(a) Warm up the engine.
(b) Turn the ignition switch off.
(c) Connect the hand−held tester to the DLC3.
(d) Turn the ignition switch to the ON position.
(e) Turn on the tester.
(f) Select the item ”DIAGNOSIS / ENHANCED OBD II / ACTIVE TEST”.
(g) According to the display on the tester, perform the ”ACTIVE TEST”.

HINT:

While driving, the shift position can be forcibly changed with the hand−held tester.

Comparing the shift position commanded by the ACTIVE TEST with the actual shift position enables you to confirm the problem (See page DI−985).

Item	Test Details	Diagnostic Note
SHIFT	[Test Details] Operate the shift solenoid valve and set each shift position by yourself. [Vehicle Condition] Less than 50 km/h (31 mph) [Others] • Press ”→” button: Shift up • Press ”←” button: Shift down	Possible to check the operation of the shift solenoid valves.

HINT:

- This test can be conducted when the vehicle speed is 50 km/h (31 mph) or less.
- The 4th to 5th up−shiftings must be performed with the accelerator pedal released.
- The 5th to 4th down−shiftings must be performed with the accelerator pedal released.
- Do not operate the accelerator pedal for at least 2 seconds after shifting and do not shift successively.
- The shift position commanded by the ECM is shown in the DATA LIST (SHIFT) display on the hand−held tester.
- The shift solenoid valve S2 is turned on/off normally when the shift lever is in the D position:

ECM command gearshift	1st	2nd	3rd	4th	5th
Shift solenoid valve S2	OFF	ON	ON	OFF	OFF

1	**Check other DTCs output (in addition to DTC P0756).**

PREPARATION:

(a) Turn the ignition switch off.
(b) Connect the OBD II scan tool or hand−held tester to the DLC3.
(c) Turn the ignition switch to the ON position.
(d) Turn on the tester.
(e) Select the item ”DIAGNOSIS / ENHANCED OBD II / DTC INFO / CURRENT CODES”.

CHECK:

Read the DTCs using the OBD II scan tool or the hand−held tester.

RESULT:

Display (DTC output)	Proceed to
Only ”P0756” is output	A
”P0756” and other DTCs	B

HINT:

If any other codes besides ”P0756” are output, perform troubleshooting for those DTCs first.

B → **Go to DTC chart (See page DI−991).**

A

2	**Inspect shift solenoid valve S2 operation.**

Shift solenoid S2:

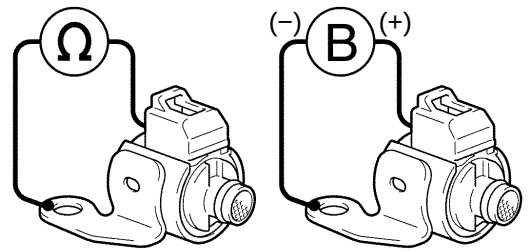

PREPARATION:

Remove the shift solenoid valve S2 (See page AT−12).

CHECK:

Measure the resistance according to the value(s) in the table below.

OK:

Tester Connection	Specified Condition 20°C (68°F)
Solenoid Connector (S2) − Solenoid Body (S2)	11 to 15 Ω

CHECK:

Connect the positive (+) lead to the terminal of the solenoid connector, and the negative (−) lead to the solenoid body.

OK:

The solenoid makes an operating sound.

NG → **Replace shift solenoid valve S2 (See page AT−12).**

OK

3	**Inspect valve body (See page AT−12).**

OK:

There are no foreign objects on each valve.

NG → **Repair or replace valve body.**

OK

Repair or replace transmission (See page AT−26).

DIDVH−01

DTC	P0771	Shift Solenoid ”E” Performance (Shift Solenoid Valve SR)

SYSTEM DESCRIPTION

The ECM uses signals from the output shaft speed sensor and input speed sensor to detect the actual gear position (1st, 2nd, 3rd, 4th or 5th gear).
Then the ECM compares the actual gear with the shift schedule in the ECM memory to detect mechanical problems of the shift solenoid valves, valve body or automatic transmission (clutch, brake or gear, etc.).

DTC No.	DTC Detection Condition	Trouble Area
P0771	The gear required by the ECM does not match the actual gear when driving (2−trip detection logic)	• Shift solenoid valve SR remains open or closed • Shift solenoid valve SL1 remains open or closed • Valve body is blocked • Automatic transmission (clutch, brake or gear, etc.)

MONITOR DESCRIPTION

This DTC indicates ”stuck ON malfunction” or ”stuck OFF malfunction” of the shift solenoid valve SR or SL1. The ECM commands gear shifts by turning the shift solenoid valves ”ON/OFF”. When the gear position commanded by the ECM and the actual gear position are not the same, the ECM illuminates the MIL and stores the DTC.

MONITOR STRATEGY

Related DTCs	P0771	Shift solenoid valve SR/Rationality check
Required sensors/Components	Main	Shift solenoid valve SR
	Sub	Speed sensor (NT), Speed sensor (NO), Crankshaft position sensor (NE)
Frequency of operation	Continuous	
Duration	OFF malfunction (A)	0.4 sec.
	OFF malfunction (B) and (C)	Immediate
	ON malfunction	0.15 sec.
MIL operation	2 driving cycles	
Sequence of operation	None	

TYPICAL ENABLING CONDITIONS

Item	Specification	
	Minimum	Maximum
All:		
Turbine speed sensor circuit	Not circuit malfunction	
Output speed sensor circuit	Not circuit malfunction	
Shift solenoid valve S1 circuit	Not circuit malfunction	
Shift solenoid valve S2 circuit	Not circuit malfunction	
Shift solenoid valve SR circuit	Not circuit malfunction	
Shift solenoid valve SL1 circuit	Not circuit malfunction	
Shift solenoid valve SL2 circuit	Not circuit malfunction	
ECT (Engine coolant temperature) sensor circuit	Not circuit malfunction	
KCS sensor circuit	Not circuit malfunction	

ETCS (Electric throttle control system)	Not system down	
Transmission range	”D”	
ECT	40˚C (104˚F) or more	−
Spark advance from Max. retard timing by KCS control	0˚ CA or more	−
Engine	Starting	
Transfer range	”HIGH”*1	
Transfer range ”HIGH” *1 (This condition is applied only 4WD)		
*1 Following conditions met		
Vehicle speed sensor circuit	Not circuit malfunction	
Output shaft speed sensor circuit	Not circuit malfunction	
Transfer output speed	143 rpm or more	−
NO/NOtf (Transfer input speed/Transfer output speed)	0.9 to 1.1	
OFF malfunction (A)		
ECM selected gear	5th	
Vehicle speed	2 km/h (1.2 mph) or more	−
Throttle valve opening angle	6.5% or more at 2,000 rpm (Conditions vary with engine speed)	−
OFF malfunction (B)		
Current ECM selected gear	5th	
Last ECM selected gear	4th	
Continuous time for ECM selecting 4th gear	2 sec. or more	−
OFF malfunction (C)		
Current ECM selected gear	5th	
Last ECM selected gear	4th	
ON malfunction		
Current ECM selected gear	2th	
Last ECM selected gear	1st	
Throttle valve opening angle (During transition from 1st to 2nd gear)	5.5% or more at 3,000 rpm (Conditions vary with engine speed)	−

TYPICAL MALFUNCTION THRESHOLDS

Detection criteria	Threshold
[OFF malfunction]	
All of the following conditions are met: OFF malfunctions (A), (B) and (C)	
2 detections are necessary per driving cycle 1st detection; temporary flag ON 2nd detection; temporary pending fault code ON	
OFF malfunction (A)	
Turbine speed/Output speed	0.93 to 1.07
OFF malfunction (B)	
Turbine speed/Output speed	Not change as follow 0.93 to 1.07 ↓ 0.65 to 0.79

OFF malfunction (C)	
Output record from ECM for 4th → 5th upshifting	Recorded
[ON malfunction]	
2 detections are necessary per driving cycle 1st detection; temporary flag ON 2nd detection; temporary pending fault code ON	
Turbine speed − Output speed x 1st gear ratio (NT − NO x 1st gear ratio)	150 rpm or more

INSPECTION PROCEDURE

HINT:

Performing the ACTIVE TEST using the hand−held tester allows the relay, VSV, actuator and so on to operate without parts removal. Performing the ACTIVE TEST as the first step of troubleshooting is one method to shorten labor time.

It is possible to display the DATA LIST during the ACTIVE TEST.

(a) Warm up the engine.
(b) Turn the ignition switch off.
(c) Connect the hand−held tester to the DLC3.
(d) Turn the ignition switch to the ON position.
(e) Turn on the tester.
(f) Select the item ”DIAGNOSIS / ENHANCED OBD II / ACTIVE TEST”.
(g) According to the display on the tester, perform the ”ACTIVE TEST”.

HINT:

While driving, the shift position can be forcibly changed with the hand−held tester.

Comparing the shift position commanded by the ACTIVE TEST with the actual shift position enables you to confirm the problem (See page DI−985).

Item	Test Details	Diagnostic Note
SHIFT	[Test Details] Operate the shift solenoid valve and set each shift position by yourself. [Vehicle Condition] Less than 50 km/h (31 mph) [Others] • Press ”→” button: Shift up • Press ”←” button: Shift down	Possible to check the operation of the shift solenoid valves.

HINT:

- This test can be conducted when the vehicle speed is 50 km/h (31 mph) or less.
- The 4th to 5th up−shiftings must be performed with the accelerator pedal released.
- The 5th to 4th down−shiftings must be performed with the accelerator pedal released.
- Do not operate the accelerator pedal for at least 2 seconds after shifting and do not shift successively.
- The shift position commanded by the ECM is shown in the DATA LIST (SHIFT) display on the hand−held tester.
- The shift solenoid valve SR and SL1 is turned on/off normally when the shift lever is in the D position:

ECM command gearshift	1st	2nd	3rd	4th	5th
Shift solenoid valve SR	OFF	OFF	OFF	OFF	ON
Shift solenoid valve SL1	OFF	OFF	OFF	OFF	ON

1	**Check other DTCs output (in addition to DTC P0771).**

PREPARATION:

(a) Turn the ignition switch off.
(b) Connect the OBD II scan tool or hand−held tester to the DLC3.
(c) Turn the ignition switch to the ON position.
(d) Turn on the tester.
(e) Select the item ”DIAGNOSIS / ENHANCED OBD II / DTC INFO / CURRENT CODES”.

CHECK:

Read the DTCs using the OBD II scan tool or the hand−held tester.

RESULT:

Display (DTC output)	Proceed to
Only ”P0771” is output	A
”P0771” and other DTCs	B

HINT:

If any other codes besides ”P0771” are output, perform troubleshooting for those DTCs first.

B → **Go to DTC chart (See page DI−991).**

A

2	**Inspect shift solenoid valve SR operation.**

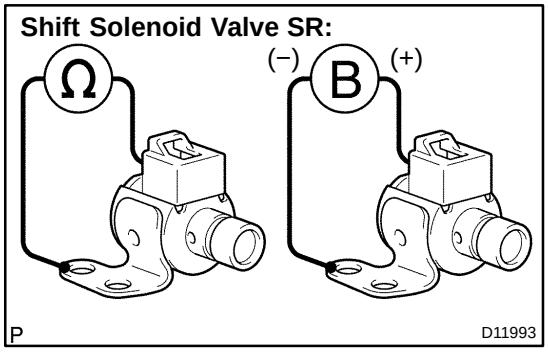

PREPARATION:

Remove the shift solenoid valve SR (See page AT−12).

CHECK:

Measure the resistance according to the value(s) in the table below.

OK:

Tester Connection	Specified Condition 20°C (68°F)
Solenoid Connector (SR) − Solenoid Body (SR)	11 to 15 Ω

CHECK:

Connect the positive (+) lead to the terminal of the solenoid connector, and the negative (−) lead to the solenoid body.

OK:

The solenoid makes an operating sound.

NG → **Replace shift solenoid valve SR (See page AT−12).**

OK

3	Inspect shift solenoid valve SL1.

Shift Solenoid Valve SL1:

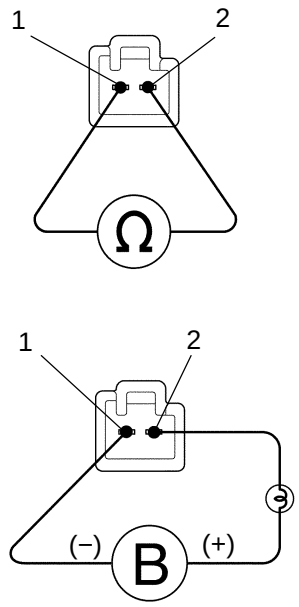

PREPARATION:

Remove the shift solenoid valve SL1 (See page AT−12).

CHECK:

Measure the resistance according to the value(s) in the table below.

OK:

Tester Connection	Specified Condition 20°C (68°F)
1 − 2	5.0 to 5.6 Ω

CHECK:

Connect the positive (+) lead with a 21 W bulb to terminal 2 and the negative (−) lead to terminal 1 of the solenoid valve connector, then check the movement of the valve.

OK:

The solenoid makes an operating sound.

NG → **Replace the shift solenoid valve SL1 (See page AT−12).**

OK

4	Inspect valve body (See page AT−12).

OK:

There are no foreign objects on each valve.

NG → **Repair or replace valve body.**

OK

Repair or replace transmission (See page AT−26).

DTC	P0776	Pressure Control Solenoid ”B” Performance (Shift Solenoid Valve SL2)

SYSTEM DESCRIPTION

The ECM uses signals from the output shaft speed sensor and input speed sensor to detect the actual gear position (1st, 2nd, 3rd, 4th or 5th gear).
Then the ECM compares the actual gear with the shift schedule in the ECM memory to detect mechanical problems of the shift solenoid valves, valve body or automatic transmission (clutch, brake or gear, etc.).

DTC No.	DTC Detection Condition	Trouble Area
P0776	The gear required by the ECM does not match the actual gear when driving (2−trip detection logic)	• Shift solenoid valve SL2 remains open or closed • Valve body is blocked • Automatic transmission (clutch, brake or gear, etc.)

MONITOR DESCRIPTION

This DTC indicates ”stuck ON malfunction” or ”stuck OFF malfunction” of the shift solenoid valve SL2.
The ECM commands gear shifts by turning the shift solenoid valves ”ON/OFF”. When the gear position commanded by the ECM and the actual gear position are not the same, the ECM illuminates the MIL and stores the DTC.

MONITOR STRATEGY

Related DTCs	P0776	Shift solenoid valve SL2/ON malfunction
Required sensors/Components	Main	Shift solenoid valve SL2
	Sub	Speed sensor (NT), Speed sensor (NO), Crankshaft position sensor (NE)
Frequency of operation	Continuous	
Duration	ON malfunctions (A), (B) and (C)	0.4 sec.
	ON malfunction (D)	3 sec.
	ON malfunction (E)	0.5 sec.
MIL operation	2 driving cycles	
Sequence of operation	None	

TYPICAL ENABLING CONDITIONS

Item	Specification	
	Minimum	Maximum
All:		
Turbine speed sensor circuit	Not circuit malfunction	
Output speed sensor circuit	Not circuit malfunction	
Shift solenoid valve S1 circuit	Not circuit malfunction	
Shift solenoid valve S2 circuit	Not circuit malfunction	
Shift solenoid valve SR circuit	Not circuit malfunction	
Shift solenoid valve SL1 circuit	Not circuit malfunction	
Shift solenoid valve SL2 circuit	Not circuit malfunction	
ECT (Engine coolant temperature) sensor circuit	Not circuit malfunction	
KCS sensor circuit	Not circuit malfunction	
ETCS (Electric throttle control system)	Not system down	
Transmission range	”D”	
ECT	40˚C (104˚F) or more	−
Spark advance from Max. retard timing by KCS control	0˚ CA or more	−
Engine	Starting	
Transfer range	”HIGH”*1	
Transfer range ”HIGH” *1 (This condition is applied only 4WD)		
*1 Following conditions met		
Vehicle speed sensor circuit	Not circuit malfunction	
Output shaft speed sensor circuit	Not circuit malfunction	
Transfer output speed	143 rpm or more	−
NO/NOtf (Transfer input speed/Transfer output speed)	0.9 to 1.1	
ON malfunction (A)		
ECM selected gear	1st	
Vehicle speed	2 to 40 km/h (1.2 to 24.9 mph)	
Throttle valve opening angle	6.5% or more at 2,000 rpm (Conditions vary with engine speed)	−
ON malfunction (B)		
ECM selected gear	3rd	
Vehicle speed	2 km/h (1.2 mph) or more	−
Throttle valve opening angle	6.5% or more at 2,000 rpm (Conditions vary with engine speed)	−
ON malfunction (C)		
ECM selected gear	4th	
Vehicle speed	2 km/h (1.2 mph) or more	−
Throttle valve opening angle	6.5% or more at 2,000 rpm (Conditions vary with engine speed)	−
ON malfunction (D)		
Current ECM selected gear	5th	
Last ECM selected gear	4th	

Vehicle speed (During transition from 4th to 5th gear)	−	Less than 100 km/h (62.2 mph)
ON malfunction (E)		
ECM selected gear	5th	
Engine speed − Turbine speed (NE − NT) (After transition from 4th to 5th gear)	−	Less than 150 rpm
Vehicle speed (After transition from 4th to 5th gear)	−	Less than 100 km/h (62.2 mph)

TYPICAL MALFUNCTION THRESHOLDS

Detection criteria	Threshold
Both of the following conditions are met: • **ON malfunctions (A) and (B), or ON malfunction (C)** • **ON malfunction (D) or (E)**	
ON malfunction (A)	
Turbine speed/Output speed	3.30 to 7.50
ON malfunction (B)	
Turbine speed/Output speed	1.28 to 1.53
ON malfunction (C)	
Turbine speed/Output speed	0.93 to 1.07
ON malfunction (D)	
Turbine speed − Output speed x 4th gear ratio (NT − NO x 4th gear ratio)	1,000 rpm or more
ON malfunction (E)	
Turbine speed − Output speed x 5th gear ratio (NT − NO x 5th gear ratio)	1,000 rpm or more

INSPECTION PROCEDURE

HINT:

Performing the ACTIVE TEST using the hand−held tester allows the relay, VSV, actuator and so on to operate without parts removal. Performing the ACTIVE TEST as the first step of troubleshooting is one method to shorten labor time.

It is possible to display the DATA LIST during the ACTIVE TEST.

(a) Warm up the engine.
(b) Turn the ignition switch off.
(c) Connect the hand−held tester to the DLC3.
(d) Turn the ignition switch to the ON position.
(e) Turn on the tester.
(f) Select the item ”DIAGNOSIS / ENHANCED OBD II / ACTIVE TEST”.
(g) According to the display on the tester, perform the ”ACTIVE TEST”.

HINT:

While driving, the shift position can be forcibly changed with the hand−held tester.

Comparing the shift position commanded by the ACTIVE TEST with the actual shift position enables you to confirm the problem (See page DI−985).

Item	Test Details	Diagnostic Note
SHIFT	[Test Details] Operate the shift solenoid valve and set each shift position by yourself. [Vehicle Condition] Less than 50 km/h (31 mph) [Others] • Press ”→” button: Shift up • Press ”←” button: Shift down	Possible to check the operation of the shift solenoid valves.

HINT:

- This test can be conducted when the vehicle speed is 50 km/h (31 mph) or less.
- The 4th to 5th up−shiftings must be performed with the accelerator pedal released.
- The 5th to 4th down−shiftings must be performed with the accelerator pedal released.
- Do not operate the accelerator pedal for at least 2 seconds after shifting and do not shift successively.
- The shift position commanded by the ECM is shown in the DATA LIST (SHIFT) display on the hand−held tester.
- The shift solenoid valve SL2 is turned on/off normally when the shift lever is in the D position:

ECM command gearshift	1st	2nd	3rd	4th	5th
Shift solenoid valve SL2	ON	ON	ON	ON	OFF

1	**Check other DTCs output (in addition to DTC P0776).**

PREPARATION:

(a) Turn the ignition switch off.
(b) Connect the OBD II scan tool or hand−held tester to the DLC3.
(c) Turn the ignition switch to the ON position.
(d) Turn on the tester.
(e) Select the item ”DIAGNOSIS / ENHANCED OBD II / DTC INFO / CURRENT CODES”.

CHECK:

Read the DTCs using the OBD II scan tool or the hand−held tester.

RESULT:

Display (DTC output)	Proceed to
Only ”P0776” is output	A
”P0776” and other DTCs	B

HINT:

If any other codes besides ”P0776” are output, perform troubleshooting for those DTCs first.

B → **Go to DTC chart (See page DI−991).**

A

2	**Inspect shift solenoid valve SL2.**

Shift Solenoid Valve SL2:

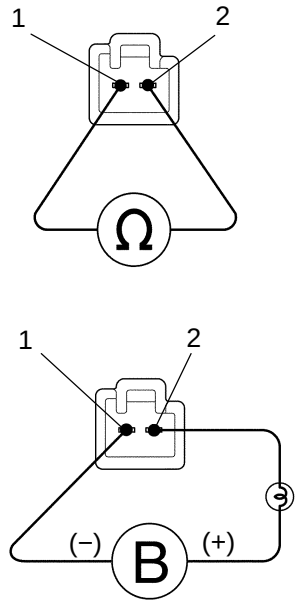

PREPARATION:

Remove the shift solenoid valve SL2 (See page AT−12).

CHECK:

Measure the resistance according to the value(s) in the table below.

OK:

Tester Connection	Specified Condition 20°C (68°F)
1 − 2	5.0 to 5.6 Ω

CHECK:

Connect the positive (+) lead with a 21 W bulb to terminal 2 and the negative (−) lead to terminal 1 of the solenoid valve connector, then check the movement of the valve.

OK:

The solenoid makes an operating sound.

NG → **Replace the shift solenoid valve SL2 (See page AT−12).**

OK

3	**Inspect valve body (See page AT−12).**

OK:

There are no foreign objects on each valve.

NG → **Repair or replace valve body.**

OK

Repair or replace transmission (See page AT−26).

DIDVJ−01

DTC	P0778	Pressure Control Solenoid ”B” Electrical (Shift Solenoid Valve SL2)

CIRCUIT DESCRIPTION

Shifting from 1st to 5th is performed in combination with ”ON” and ”OFF” operation of the shift solenoid valves SL1, SL2, S1, S2 and SR which are controlled by the ECM. If an open or short circuit occurs in either of the shift solenoid valves, the ECM controls the remaining normal shift solenoid valves to allow the vehicle to be operated smoothly (See page DI−985).

DTC No.	DTC Detection Condition	Trouble Area
P0778	The ECM checks for an open or short in the shift solenoid valve SL2 circuit while driving and shifting gears. (1−trip detection logic) • Output signal duty equals to 100%. (NOTE: SL2 output signal duty is less than 100% under normal condition.)	• Open or short in shift solenoid valve SL2 circuit • Shift solenoid valve SL2 • ECM

MONITOR DESCRIPTION

This DTC indicates an open or short in the shift solenoid valve SL2 circuit. The ECM commands gear shift by turning the shift solenoid valves ”ON/OFF”. When there is an open or short circuit in any shift solenoid valve circuit, the ECM detects the problem and illuminates the MIL and stores the DTC. And the ECM performs the fail−safe function and turns the other normal shift solenoid valves ”ON/OFF”. (In case of an open or short circuit, the ECM stops sending current to the circuit.)
While driving and shifting gears, if the ECM detects an open or short in the shift solenoid valve SL2 circuit, the ECM determines there is a malfunction (See page DI−985).

MONITOR STRATEGY

Related DTCs	P0778	Shift solenoid valve SL2/Range check
Required sensors/Components	Shift solenoid valve SL2	
Frequency of operation	Continuous	
Duration	1 sec.	
MIL operation	Immediate	
Sequence of operation	None	

TYPICAL ENABLING CONDITIONS

Item	Specification	
	Minimum	Maximum
The monitor will run whenever this DTC is not present.	See page DI−963	
Battery voltage	10 V or more	−
CPU commanded duty	−	Less than 75%
Ignition switch	ON	
Starter	OFF	

TYPICAL MALFUNCTION THRESHOLDS

Detection criteria	Threshold
Output signal duty	100%

COMPONENT OPERATING RANGE

Parameter	Standard value
Output signal duty	Less than 100%

WIRING DIAGRAM

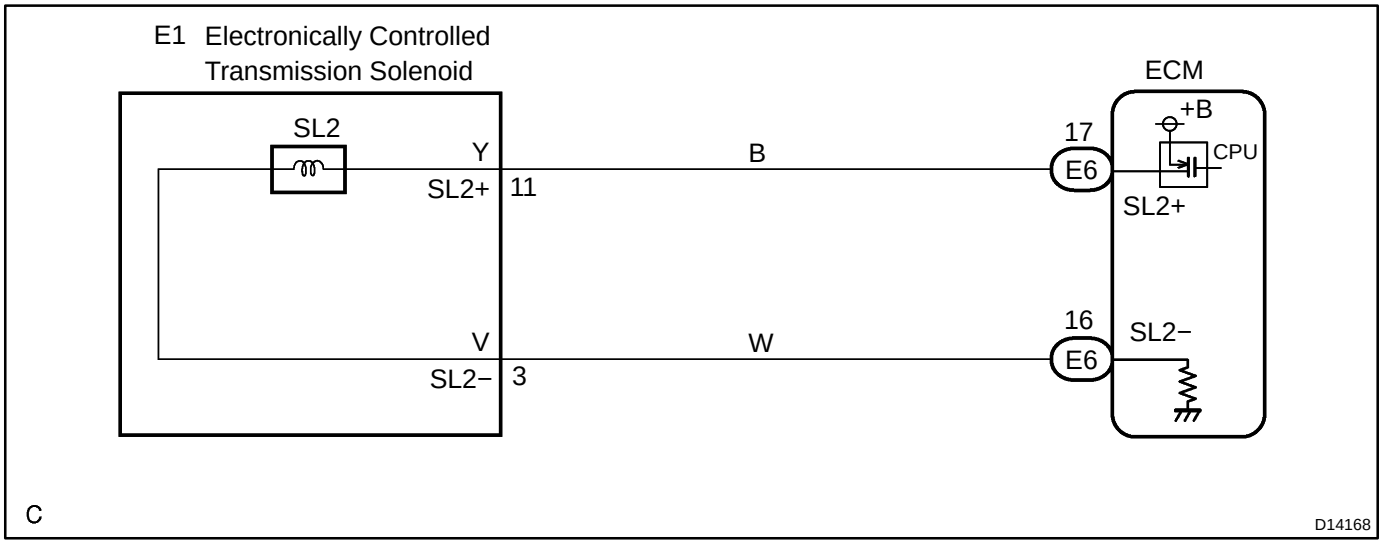

INSPECTION PROCEDURE

HINT:

- The shift solenoid valve SL2 is turned on/off normally when the shift lever is in the D position:

ECM command gearshift	1st	2nd	3rd	4th	5th
Shift solenoid valve SL2	ON	ON	ON	ON	OFF

1	**Inspect transmission wire.**

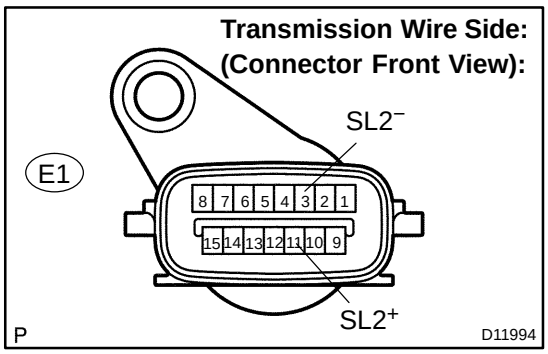

PREPARATION:

Disconnect the transmission wire connector.

CHECK:

Measure the resistance according to the value(s) in the table below.

OK:

Tester Connection	Specified Condition 20°C (68°F)
11 (SL2+) − 3 (SL2−)	5.0 to 5.6 Ω

CHECK:

Measure the resistance according to the value(s) in the table below.

OK:

Tester Connection	Specified Condition
11 (SL2+) − Body ground	10 kΩ or higher
3 (SL2−) − Body ground	↑

NG → **Go to step 3.**

OK

2	Check harness and connector (Transmission wire − ECM)

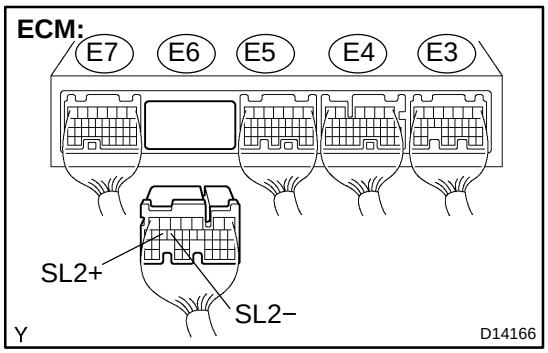

PREPARATION:

(a) Connect the transmission wire connector.

(b) Disconnect the ECM connector.

CHECK:

Measure the resistance according to the value(s) in the table below.

OK:

Tester Connection	Specified Condition 20°C (68°F)
E6 − 17 (SL2+) − E6 − 16 (SL2−)	5.0 to 5.6 Ω

CHECK:

Measure the resistance according to the value(s) in the table below.

OK:

Tester Connection	Specified Condition
E6 − 17 (SL2+) − Body ground	10 kΩ or higher
E6 − 16 (SL2−) − Body ground	↑

NG → **Repair or replace the harness or connector (See page IN−30).**

OK

Replace the ECM (See page SF−66).

3	Check shift solenoid valve SL2.

Shift Solenoid Valve SL2:

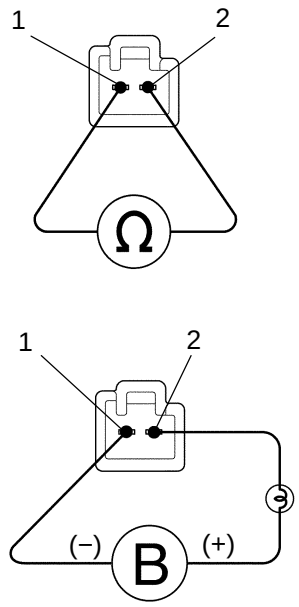

D12795

PREPARATION:

Remove the shift solenoid valve SL2 (See page AT−12).

CHECK:

Measure the resistance according to the value(s) in the table below.

OK:

Tester Connection	Specified Condition 20°C (68°F)
1 − 2	5.0 to 5.6 Ω

CHECK:

Connect the positive (+) lead with a 21 W bulb to terminal 2 and the negative (−) lead to terminal 1 of the solenoid valve connector, then check the movement of the valve.

OK:

The solenoid makes an operating sound.

NG → **Replace the shift solenoid valve SL2 (See page AT−12).**

OK

Repair or replace the transmission wire (See page AT−9).

DIDVK−01

DTC	P0781	1−2 Shift (1−2 Shift Valve)

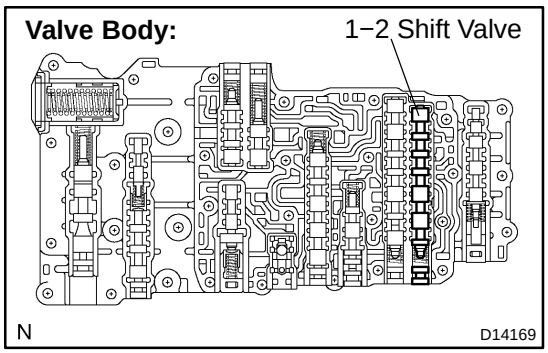

SYSTEM DESCRIPTION

The 1−2 shift valve performs shifting to 1st gear and other gears.

DTC No.	DTC Detection Condition	Trouble Area
P0781	The gear required by the ECM does not match the actual gear when driving (2−trip detection logic)	• Valve body is blocked up or stuck (1−2 shift valve) • Automatic transmission (clutch, brake or gear, etc.)

MONITOR DESCRIPTION

This DTC indicates that the 1−2 shift valve in the valve body is locked in the direction the spring compresses. The ECM commands gear shifts by turning the shift solenoid valves ”ON/OFF” and switching oil pressure to the valves in the valve body.

The ECM calculates the ”actual” transmission gear by comparing the signals from the input speed sensor (NCO) and the output speed sensor (SP2). The ECM can detect many mechanical problems in the shift solenoids, valve body, and the transmission clutches, brakes, and gears. If the ECM detects that the actual gear position and the commanded gear position are different, it will illuminate the MIL and store the DTC .

MONITOR STRATEGY

Related DTCs	P0781	Valve body/Rationality check
Required sensors/Components	Main	Valve body
	Sub	Automatic transmission assembly, Speed sensor (NT), Speed sensor (NO), Vehicle speed sensor, Throttle speed sensor
Frequency of operation	Continuous	
Duration	Conditions (A) and (B)	0.4 sec.
	Condition (C)	3 sec.
	Condition (D)	0.5 sec.
MIL operation	2 driving cycles	
Sequence of operation	None	

TYPICAL ENABLING CONDITIONS

Item	Specification	
	Minimum	Maximum
All:		
Turbine speed sensor circuit	Not circuit malfunction	
Output speed sensor circuit	Not circuit malfunction	
Shift solenoid valve S1 circuit	Not circuit malfunction	
Shift solenoid valve S2 circuit	Not circuit malfunction	
Shift solenoid valve SR circuit	Not circuit malfunction	
Shift solenoid valve SL1 circuit	Not circuit malfunction	
Shift solenoid valve SL2 circuit	Not circuit malfunction	
ECT (Engine coolant temperature) sensor circuit	Not circuit malfunction	
KCS sensor circuit	Not circuit malfunction	
ETCS (Electric throttle control system)	Not system down	
Transmission range	”D”	
ECT	40°C (104°F) or more	−
Spark advance from Max. retard timing by KCS control	0° CA or more	−
Engine	Starting	
Transfer range	”HIGH”*1	
Transfer range ”HIGH” *1 (This condition is applied only 4WD)		
*1 Following conditions met		
Vehicle speed sensor circuit	Not circuit malfunction	
Output shaft speed sensor circuit	Not circuit malfunction	
Transfer output speed	143 rpm or more	−
NO/NOtf (Transfer input speed/Transfer output speed)	0.9 to 1.1	
Condition (A)		
ECM selected gear	2nd	
Vehicle speed	2 km/h (1.2 mph) or more	−
Output speed	2nd → 1st down shift point or more	−
Throttle valve opening angle	6.5% or more at 2,000 rpm (Conditions vary with engine speed)	−
Condition (B)		
ECM selected gear	4th	
Vehicle speed	2 km/h (1.2 mph) or more	−
Throttle valve opening angle	6.5% or more at 2,000 rpm (Conditions vary with engine speed)	−
Condition (C)		
Current ECM selected gear	5th	
Last ECM selected gear	4th	
Vehicle speed (During transition from 4th to 5th gear)	−	Less than 100 km/h (62.2 mph)

Condition (D)		
ECM selected gear	5th	
Engine speed − Turbine speed (NE − NT) (After transition from 4th to 5th gear)	−	Less than 150 rpm
Vehicle speed (After transition from 4th to 5th gear)	−	Less than 100 km/h (62.2 mph)

TYPICAL MALFUNCTION THRESHOLDS

Detection criteria	Threshold
Both of the following conditions are met: Condition (A), and Condition (B), (C) or (D)	
Condition (A)	
Turbine speed/Output speed	3.30 to 7.50
Condition (B)	
Turbine speed/Output speed	1.28 to 1.53
Condition (C)	
Turbine speed − Output speed x 4th gear ratio (NT − NO x 4th gear ratio)	1,000 rpm or more
Condition (D)	
Turbine speed − Output speed x 5th gear ratio (NT − NO x 5th gear ratio)	1,000 rpm or more

INSPECTION PROCEDURE

1	**Check other DTCs output (in addition to DTC P0781).**

PREPARATION:

(a) Turn the ignition switch off.
(b) Connect the OBD II scan tool or hand−held tester to the DLC3.
(c) Turn the ignition switch to the ON position.
(d) Turn on the tester.
(e) Select the item ”DIAGNOSIS / ENHANCED OBD II / DTC INFO / CURRENT CODES”.

CHECK:

Read the DTCs using the OBD II scan tool or the hand−held tester.

RESULT:

Display (DTC output)	Proceed to
Only ”P0781” is output	A
”P0781” and other DTCs	B

HINT:

If any other codes besides ”P0781” are output, perform troubleshooting for those DTCs first.

B → **Go to DTC chart (See page DI−991).**

A

2	**Perform active test**

HINT:
Performing the ACTIVE TEST using the hand−held tester allows the relay, VSV, actuator and so on to operate without parts removal. Performing the ACTIVE TEST as the first step of troubleshooting is one method to shorten labor time.
It is possible to display the DATA LIST during the ACTIVE TEST.
(a) Warm up the engine.
(b) Turn the ignition switch off.
(c) Connect the hand−held tester to the DLC3.
(d) Turn the ignition switch to the ON position.
(e) Turn on the tester.
(f) Select the item ”DIAGNOSIS / ENHANCED OBD II / ACTIVE TEST”.
(g) According to the display on the tester, perform the ”ACTIVE TEST”.
HINT:
While driving, the shift position can be forcibly changed with the hand−held tester.
Comparing the shift position commanded by the ACTIVE TEST with the actual shift position enables you to confirm the problem (See page DI−985).

Standard:

Item	Test Details	Diagnostic Note
SHIFT	[Test Details] Operate the shift solenoid valve and set each shift position by yourself. [Vehicle Condition] Less than 50 km/h (31 mph) [Others] • Press ”→” button: Shift up • Press ”←” button: Shift down	Possible to check the operation of the shift solenoid valves.

HINT:
- This test can be conducted when the vehicle speed is 50 km/h (31 mph) or less.
- The 4th to 5th up−shiftings must be performed with the accelerator pedal released.
- The 5th to 4th down−shiftings must be performed with the accelerator pedal released.
- Do not operate the accelerator pedal for at least 2 seconds after shifting and do not shift successively.
- The shift position commanded by the ECM is shown in the DATA LIST (SHIFT) display on the hand−held tester.

OK:

Gear position changes in accordance with the tester command.

NG → **Repair or replace valve body (See page AT−12).**

OK

3	**Clear the DTC and running test.**

CHECK:

Clear the DTC, and check DTC again after conducting the ”MONITOR DRIVE PATTERN FOR ECT TEST” (See page DI−969).

OK:

No DTC code

NG → **Repair or replace valve body (See page AT−12).**

OK →

END

DIDVL−01

DTC	P0973	Shift Solenoid ”A” Control Circuit Low (Shift Solenoid Valve S1)

DTC	P0974	Shift Solenoid ”A” Control Circuit High (Shift Solenoid Valve S1)

CIRCUIT DESCRIPTION

Shifting from 1st to 5th is performed in combination with ”ON” and ”OFF” operation of the shift solenoid valves SL1, SL2, S1, S2 and SR which are controlled by the ECM. If an open or short circuit occurs in either of the shift solenoid valves, the ECM controls the remaining normal shift solenoid valves to allow the vehicle to be operated smoothly (See page DI−985).

DTC No.	DTC Detection Condition	Trouble Area
P0973	ECM detects short in solenoid valve S1 circuit 2 times when solenoid valve S1 is operated (1−trip detection logic)	• Short in shift solenoid valve S1 circuit • Shift solenoid valve S1 • ECM
P0974	ECM detects open in solenoid valve S1 circuit 2 times when solenoid valve S1 is not operated (1−trip detection logic)	• Open in shift solenoid valve S1 circuit • Shift solenoid valve S1 • ECM

MONITOR DESCRIPTION

These DTCs indicate an open or short in the shift solenoid valve S1 circuit. When there is an open or short circuit in any shift solenoid valve circuit, the ECM detects the problem and illuminates the MIL and stores the DTC. When the shift solenoid valve S1 is on, if resistance is 8 Ω or less, the ECM determines there is a short in the shift solenoid valve S1 circuit.

When the shift solenoid valve S1 is off, if resistance is 100 kΩ or more, the ECM determines there is an open in the shift solenoid valve S1 circuit (See page DI−985).

MONITOR STRATEGY

Related DTCs	P0973	Shift solenoid valve S1/Range check (Low resistance)
	P0974	Shift solenoid valve S1/Range check (High resistance)
Required sensors/Components	Shift solenoid valve S1	
Frequency of operation	Continuous	
Duration	0.064 sec.	
MIL operation	Immediate	
Sequence of operation	None	

TYPICAL ENABLING CONDITIONS

Item	Specification	
	Minimum	Maximum
The monitor will run whenever these DTCs are not present.	See page DI−963	
Range check (Low resistance)		
Shift solenoid valve S1	ON	
Range check (High resistance)		
Shift solenoid valve S1	OFF	

TYPICAL MALFUNCTION THRESHOLDS

Detection criteria	Threshold
Range check (Low resistance)	
Shift solenoid valve S1 resistance	8 Ω or less
Range check (High resistance)	
Shift solenoid valve S1 resistance	100 kΩ or more

COMPONENT OPERATING RANGE

Parameter	Standard value
Shift solenoid valve S1	Resistance: 11 to 15 Ω at 20°C (68°F)

WIRING DIAGRAM

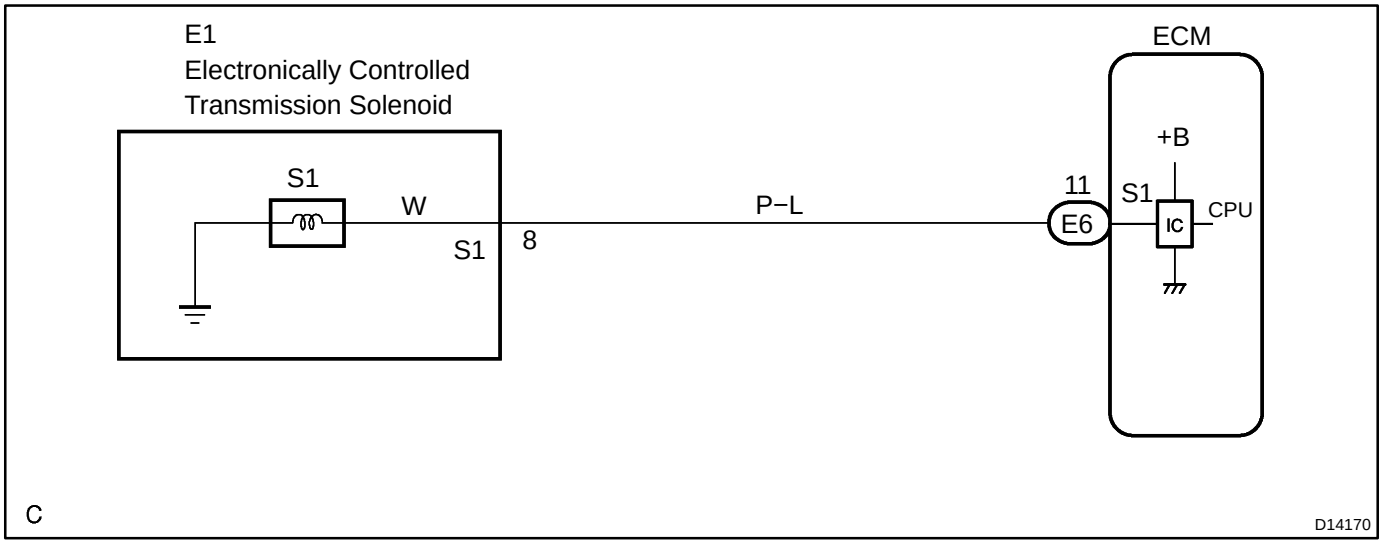

INSPECTION PROCEDURE

HINT:

- The shift solenoid valve S1 is turned on/off normally when the shift lever is in the D position:

ECM command gearshift	1st	2nd	3rd	4th	5th
Shift solenoid valve S1	ON	ON	OFF	OFF	OFF

1	**Check transmission wire.**

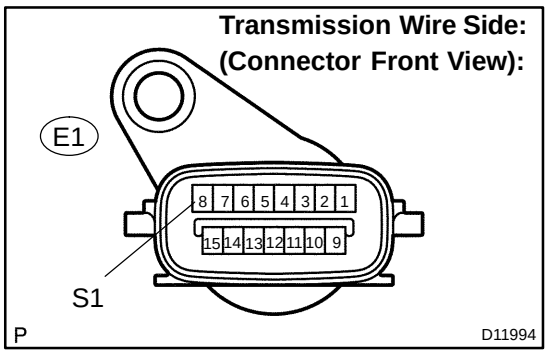

PREPARATION:

Disconnect the transmission wire connector.

CHECK:

Measure the resistance according to the value(s) in the table below.

OK:

Tester Connection	Specified Condition 20°C (68°F)
8 − Body ground	11 to 15 Ω

NG → **Go to step 3.**

OK

2	Check harness and connector (Transmission wire − ECM)

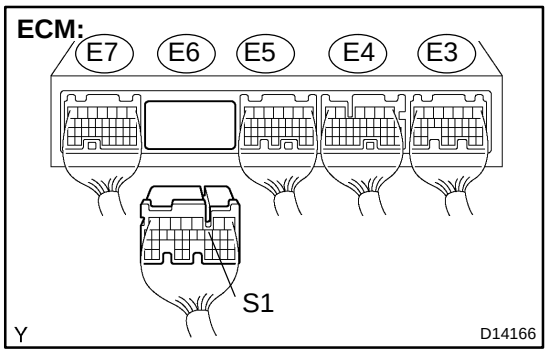

PREPARATION:

(a) Connect the transmission wire connector.

(b) Disconnect the ECM connector.

CHECK:

Measure the resistance according to the value(s) in the table below.

OK:

Tester Connection	Specified Condition 20°C (68°F)
E6 − 11 (S1) − Body ground	11 to 15 Ω

NG → **Repair or replace the harness or connector (See page IN−30).**

OK →

Replace the ECM (See page SF−66).

3	Check shift solenoid valve S1.

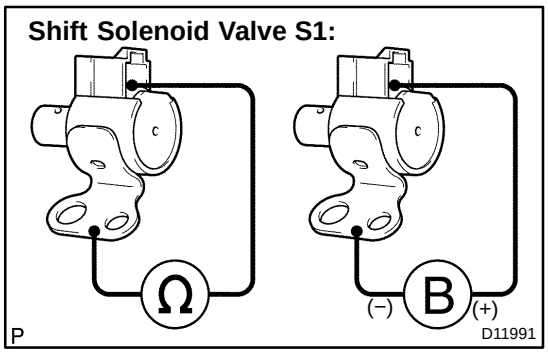

PREPARATION:

Remove the shift solenoid valve S1 (See page AT−12).

CHECK:

Measure the resistance according to the value(s) in the table below.

OK:

Tester Connection	Specified Condition 20°C (68°F)
Solenoid Connector (S1) − Solenoid Body (S1)	11 to 15 Ω

CHECK:

Connect the positive (+) lead to the terminal of the solenoid connector, and the negative (−) lead to the solenoid body.

OK:

The solenoid makes an operating sound.

NG → **Replace the shift solenoid valve S1 (See page AT−12).**

OK

Repair or replace the transmission wire (See page AT−9).

DIDVM−01

DTC	P0976	Shift Solenoid ”B” Control Circuit Low (Shift Solenoid Valve S2)

DTC	P0977	Shift Solenoid ”B” Control Circuit High (Shift Solenoid Valve S2)

CIRCUIT DESCRIPTION

Shifting from 1st to 5th is performed in combination with ”ON” and ”OFF” operation of the shift solenoid valves SL1, SL2, S1, S2 and SR which are controlled by the ECM. If an open or short circuit occurs in either of the shift solenoid valves, the ECM controls the remaining normal shift solenoid valves to allow the vehicle to be operated smoothly (See page DI−985).

DTC No.	DTC Detection Condition	Trouble Area
P0976	ECM detects short in solenoid valve S2 circuit 2 times when solenoid valve S2 is operated (1−trip detection logic)	• Short in shift solenoid valve S2 circuit • Shift solenoid valve S2 • ECM
P0977	ECM detects open in solenoid valve S2 circuit 2 times when solenoid valve S2 is not operated (1−trip detection logic)	• Open in shift solenoid valve S2 circuit • Shift solenoid valve S2 • ECM

MONITOR DESCRIPTION

These DTCs indicate an open or short in the shift solenoid valve S2 circuit. When there is an open or short circuit in any shift solenoid valve circuit, the ECM detects the problem and illuminates the MIL and stores the DTC. When the shift solenoid valve S2 is on, if resistance is 8 Ω or less, the ECM determines there is a short in the shift solenoid valve S2 circuit.

When the shift solenoid valve S2 is off, if resistance is 100 kΩ or more, the ECM determines there is an open in the shift solenoid valve S2 circuit (See page DI−985).

MONITOR STRATEGY

Related DTCs	P0976	Shift solenoid valve S2/Range check (Low resistance)
	P0977	Shift solenoid valve S2/Range check (High resistance)
Required sensors/Components	Shift solenoid valve S2	
Frequency of operation	Continuous	
Duration	0.064 sec.	
MIL operation	Immediate	
Sequence of operation	None	

TYPICAL ENABLING CONDITIONS

Item	Specification	
	Minimum	Maximum
The monitor will run whenever these DTCs are not present.	See page DI−963	
Range check (Low resistance)		
Shift solenoid valve S2	ON	
Range check (High resistance)		
Shift solenoid valve S2	OFF	

TYPICAL MALFUNCTION THRESHOLDS

Detection criteria	Threshold
Range check (Low resistance)	
Shift solenoid valve S2 resistance	8 Ω or less
Range check (High resistance)	
Shift solenoid valve S2 resistance	100 kΩ or more

COMPONENT OPERATING RANGE

Parameter	Standard value
Shift solenoid valve S2	Resistance: 11 to 15 Ω at 20°C (68°F)

WIRING DIAGRAM

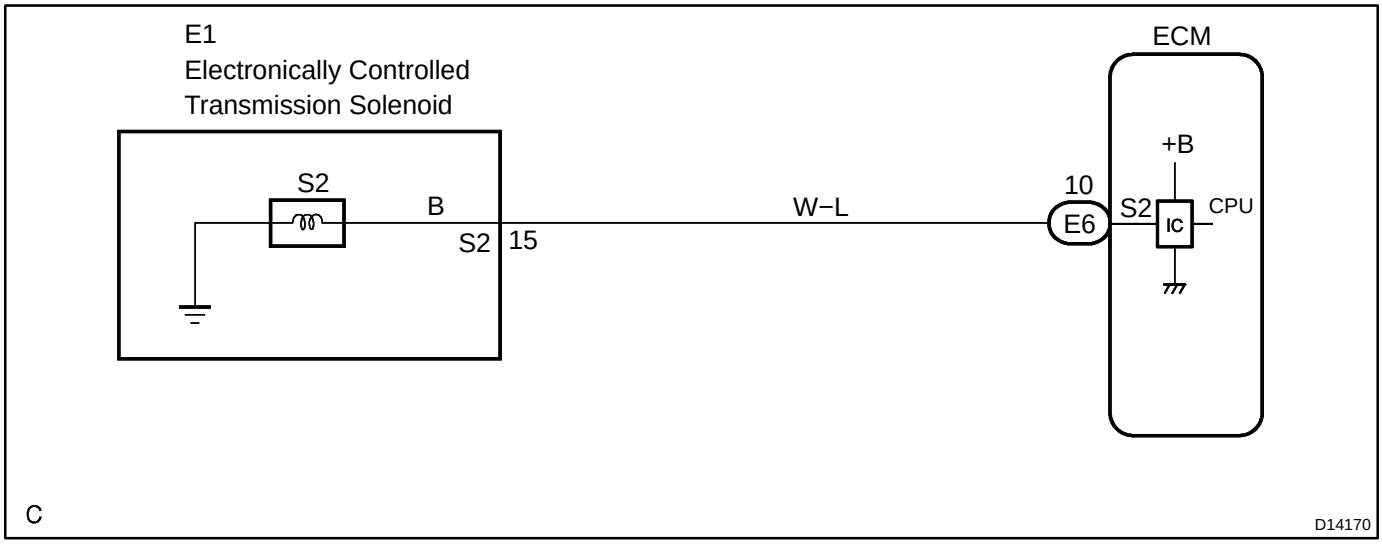

INSPECTION PROCEDURE

HINT:

- The shift solenoid valve S2 is turned on/off normally when the shift lever is in the D position:

ECM command gearshift	1st	2nd	3rd	4th	5th
Shift solenoid valve S2	OFF	ON	ON	OFF	OFF

1	**Check transmission wire.**

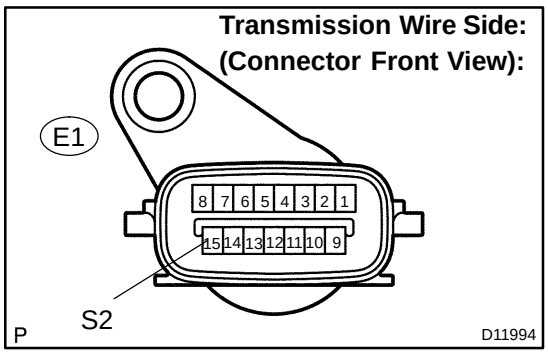

PREPARATION:

Disconnect the transmission wire connector.

CHECK:

Measure the resistance according to the value(s) in the table below.

OK:

Tester Connection	Specified Condition 20°C (68°F)
15 − Body ground	11 to 15 Ω

NG → **Go to step 3.**

OK

2	Check harness and connector (Transmission wire − ECM)

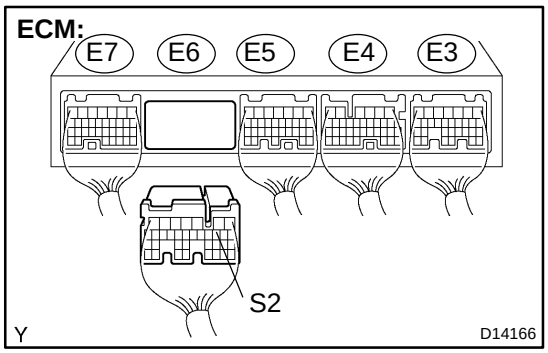

PREPARATION:

(a) Connect the transmission wire connector.

(b) Disconnect the ECM connector.

CHECK:

Measure the resistance according to the value(s) in the table below.

OK:

Tester Connection	Specified Condition 20°C (68°F)
E6 − 10 (S2) − Body ground	11 to 15 Ω

NG → **Repair or replace the harness or connector (See page IN−30).**

OK →

Replace the ECM (See page SF−66).

3	Check shift solenoid valve S2.

Shift Solenoid Valve S2:

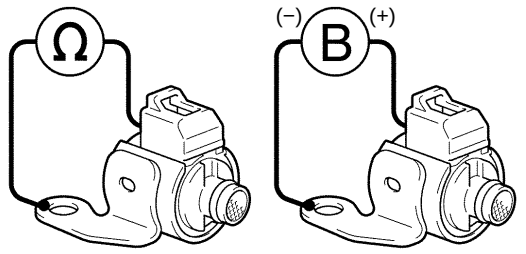

PREPARATION:

Remove the shift solenoid valve S2 (See page AT−12).

CHECK:

Measure the resistance according to the value(s) in the table below.

OK:

Tester Connection	Specified Condition 20°C (68°F)
Solenoid Connector (S2) − Solenoid Body (S2)	11 to 15 Ω

CHECK:

Connect the positive (+) lead to the terminal of the solenoid connector, and the negative (−) lead to the solenoid body.

OK:

The solenoid makes an operating sound.

NG → **Replace the shift solenoid valve S2 (See page AT−12).**

OK

Repair or replace the transmission wire (See page AT−9).

DIDVN−01

DTC	P0985	Shift Solenoid ”E” Control Circuit Low (Shift Solenoid Valve SR)

DTC	P0986	Shift Solenoid ”E” Control Circuit High (Shift Solenoid Valve SR)

CIRCUIT DESCRIPTION

Shifting from 1st to 5th is performed in combination with ”ON” and ”OFF” operation of the shift solenoid valves SL1, SL2, S1, S2 and SR which are controlled by the ECM. If an open or short circuit occurs in either of the shift solenoid valves, the ECM controls the remaining normal shift solenoid valves to allow the vehicle to be operated smoothly (See page DI−985).

DTC No.	DTC Detection Condition	Trouble Area
P0985	ECM detects short in solenoid valve SR circuit 2 times when solenoid valve SR is operated (1−trip detection logic)	• Short in shift solenoid valve SR circuit • Shift solenoid valve SR • ECM
P0986	ECM detects open in solenoid valve SR circuit 2 times when solenoid valve SR is not operated (1−trip detection logic)	• Open in shift solenoid valve SR circuit • Shift solenoid valve SR • ECM

MONITOR DESCRIPTION

These DTCs indicate an open or short in the shift solenoid valve SR circuit. When there is an open or short circuit in any shift solenoid valve circuit, the ECM detects the problem and illuminates the MIL and stores the DTC. When the shift solenoid valve SR is on, if resistance is 8 Ω or less, the ECM determines there is a short in the shift solenoid valve SR circuit.

When the shift solenoid valve SR is off, if resistance is 100 kΩ or more, the ECM determines there is an open in the shift solenoid valve SR circuit (See page DI−985).

MONITOR STRATEGY

Related DTCs	P0985	Shift solenoid valve SR/Range check (Low resistance)
	P0986	Shift solenoid valve SR/Range check (High resistance)
Required sensors/Components	Shift solenoid valve SR	
Frequency of operation	Continuous	
Duration	0.064 sec.	
MIL operation	Immediate	
Sequence of operation	None	

TYPICAL ENABLING CONDITIONS

Item	Specification	
	Minimum	Maximum
The monitor will run whenever these DTCs are not present.	See page DI−963	
Range check (Low resistance)		
Shift solenoid valve SR	ON	
Battery voltage	8 V or more	−
Ignition switch	ON	
Starter	OFF	
Range check (High resistance)		
Shift solenoid valve SR	OFF	
Battery voltage	8 V or more	−
Ignition switch	ON	
Starter	OFF	

TYPICAL MALFUNCTION THRESHOLDS

Detection criteria	Threshold
Range check (Low resistance)	
Shift solenoid valve SR resistance	8 Ω or less
Range check (High resistance)	
Shift solenoid valve SR resistance	100 kΩ or more

COMPONENT OPERATING RANGE

Parameter	Standard value
Shift solenoid valve SR	Resistance: 11 to 15 at 20°C (68°F)

WIRING DIAGRAM

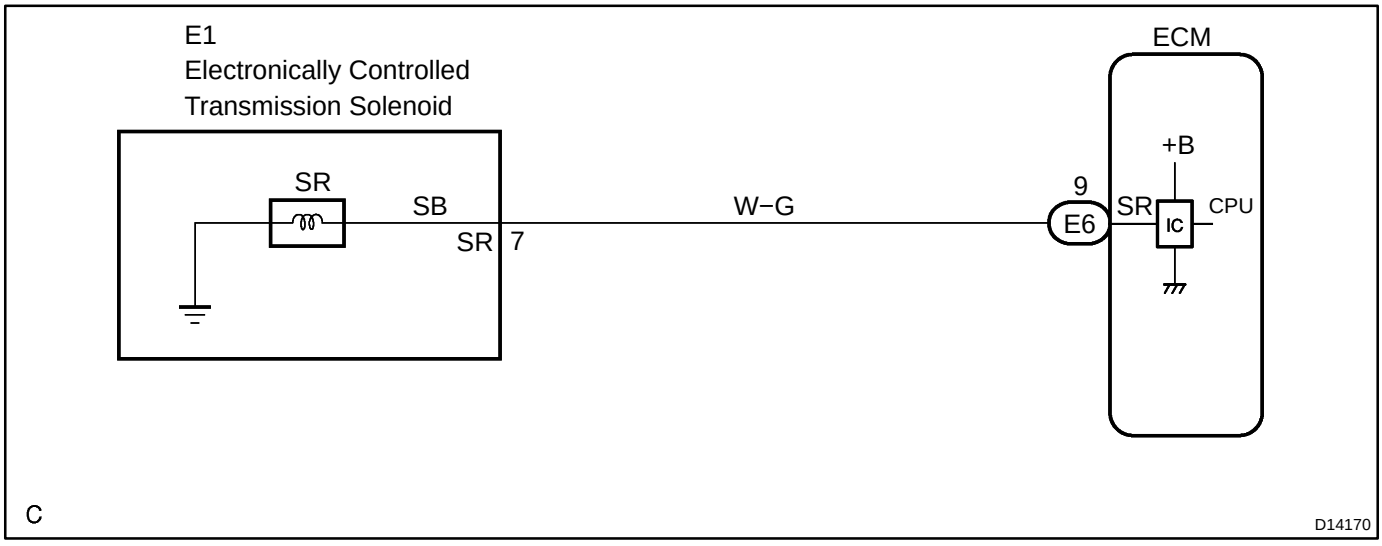

INSPECTION PROCEDURE

HINT:

- The shift solenoid valve SR is turned on/off normally when the shift lever is in the D position:

ECM command gearshift	1st	2nd	3rd	4th	5th
Shift solenoid valve SR	OFF	OFF	OFF	OFF	ON

1	**Check transmission wire.**

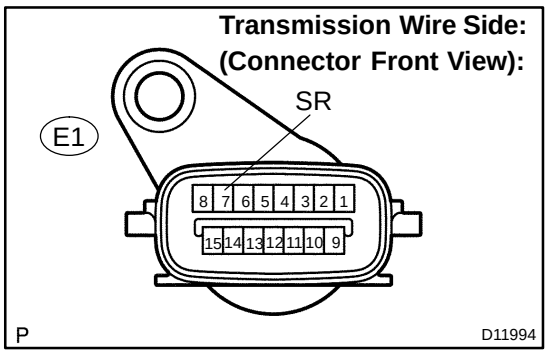

PREPARATION:

Disconnect the transmission wire connector.

CHECK:

Measure the resistance according to the value(s) in the table below.

OK:

Tester Connection	Specified Condition 20°C (68°F)
7 − Body ground	11 to 15 Ω

NG → **Go to step 3.**

OK

2	Check harness and connector (Transmission wire − ECM)

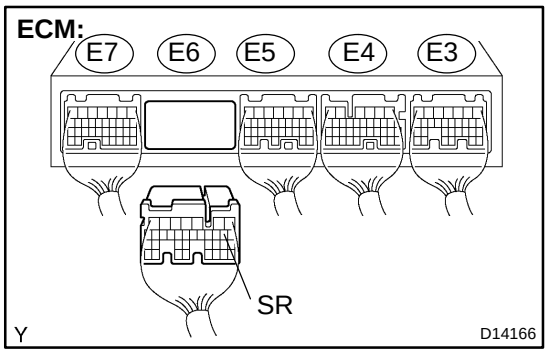

PREPARATION:

(a) Connect the transmission wire connector.

(b) Disconnect the connector of the ECM.

CHECK:

Measure the resistance according to the value(s) in the table below.

OK:

Tester Connection	Specified Condition 20°C (68°F)
E6 − 9 (SR) − Body ground	11 to 15 Ω

NG → **Repair or replace the harness or connector (See page IN−30).**

OK →

Replace the ECM (See page SF−66).

3	Check shift solenoid valve SR.

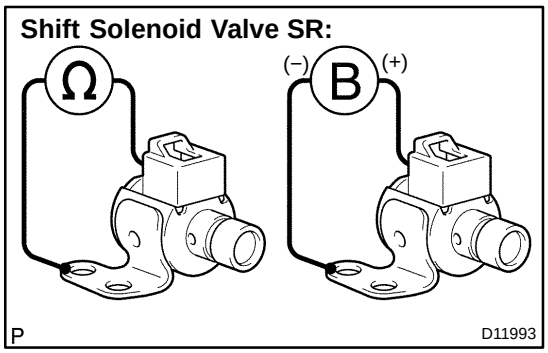

PREPARATION:

Remove the shift solenoid valve SR (See page AT−12).

CHECK:

Measure the resistance according to the value(s) in the table below.

OK:

Tester Connection	Specified Condition 20°C (68°F)
Solenoid Connector (SR) − Solenoid Body (SR)	11 to 15 Ω

CHECK:

Connect the battery positive lead to the solenoid connector terminal and the battery negative lead to the solenoid body ground.

OK:

Solenoid sounds an operation noise.

NG → **Replace the shift solenoid valve SR (See page AT−12).**

OK

Repair or replace the transmission wire (See page AT−9).

DIDVU−01

Shift Position L Switch Circuit

CIRCUIT DESCRIPTION

The shift position L switch is a momentary type switch. When the shift position L switch is pressed while driving with the shift lever in the 2 position, the L position indicator on the combination meter comes on and the transmission is locked in 1st gear. When the switch is pressed again, the indicator goes off and the transmission is released.

WIRING DIAGRAM

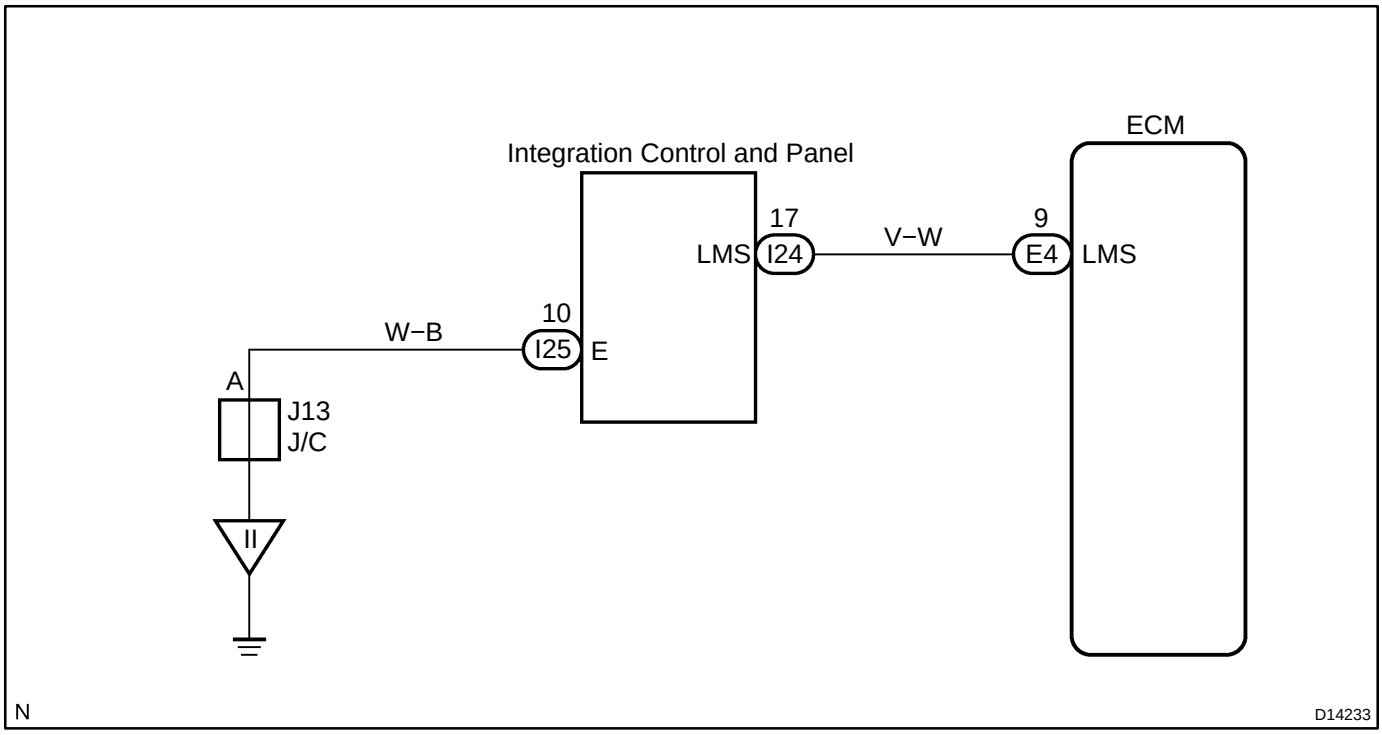

INSPECTION PROCEDURE

1	Check harness and connector (shift position L switch − body ground).

Wire Harness Side:
(Connector Front View):

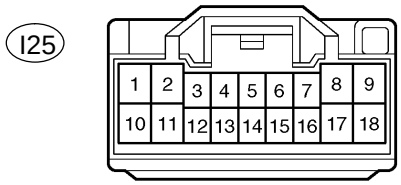

PREPARATION:
Remove the center cluster integration panel assembly (shift position L switch).

CHECK:
Measure the resistance according to the value(s) in the table below.

OK:

Tester Connection	Specified Condition
10 − Body ground	Below 1 Ω

NG → **Repair or replace the harness or connector (See page IN−30).**

OK

2	Inspect center cluster integration panel (shift position L switch).

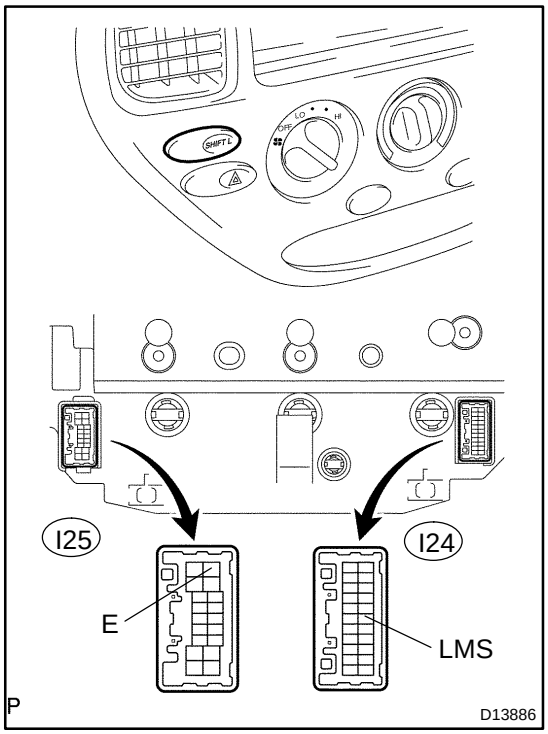

CHECK:
Measure the resistance according to the value(s) in the table below.

OK:

Switch Condition	Tester Connection	Specified Condition
Shift position L switch pressed and held	I24 − 17 (LMS) − I25 − 10 (E)	Below 1 Ω
Shift position L switch released	↑	10 kΩ or higher

NG → **Replace center cluster integration panel (shift position L switch).**

OK

3	Check harness and connector (shift position L switch − ECM).

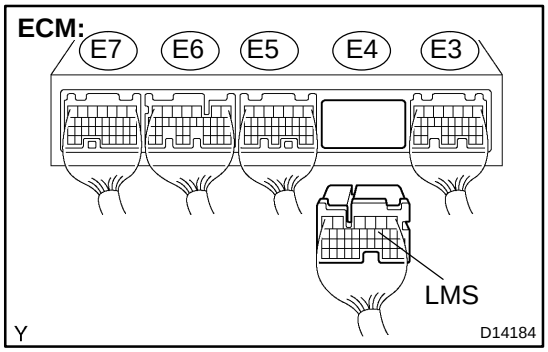

PREPARATION:

(a) Install the center cluster integration panel assembly (shift position L switch).

(b) Disconnect the connector from the ECM.

CHECK:

Measure the resistance according to the value(s) in the table below.

OK:

Switch Condition	Tester Connection	Specified Condition
Shift position L switch pressed and held	E4 − 9 (LMS) − Body ground	Below 1 Ω
Shift position L switch released	↑	10 kΩ or higher

NG → **Repair or replace the harness or connector (See page IN−30).**

OK

Proceed to next circuit inspection shown on matrix chart (See page DI−971).

DIDV4−01

CHECK MODE PROCEDURE

DESCRIPTION

Check mode has a higher sensitivity to malfunctions and can detect malfunctions that normal mode cannot detect. Check mode can also detect all the malfunctions that normal mode can detect. In check mode, DTCs are detected with 1−trip detection logic.

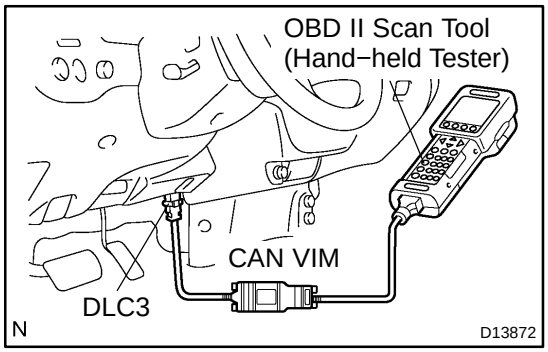

CHECK MODE PROCEDURE

(a) Make sure that the items below are true:
  (1) Battery positive voltage 11 V or more
  (2) Throttle valve fully closed
  (3) Transmission in the P or N position
  (4) A/C switched OFF

(b) Turn the ignition switch OFF.

(c) Connect the hand−held tester together with the Controller Area Network Vehicle Interface Module (CAN VIM) to the DLC3.

(d) Turn the ignition switch ON.

(e) Enter the following menus: DIAGNOSIS / ENHANCED OBD II / CHECK MODE.

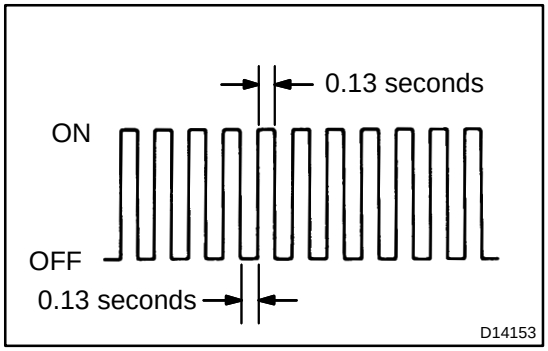

(f) Change the ECM to check mode. Make sure the MIL flashes as shown in the illustration.

NOTICE:

All DTCs and freeze frame data recorded will be erased if: 1) the hand−held tester is used to change the ECM from normal mode to check mode or vice−versa; or 2) during check mode, the ignition switch is turned from ON to ACC or LOCK.

Before check mode, make notes of the DTCs and freeze frame data.

(g) Start the engine. The MIL should turn off after the engine starts.

(h) Perform ”MONITOR DRIVE PATTERN” for the ECT test (See page DI−969).
(Or, simulate the conditions of the malfunction described by the customer).

(i) After simulating the malfunction conditions, use the hand−held tester diagnosis selector to check the DTC and freeze frame data.

DIDUR−01

CUSTOMER PROBLEM ANALYSIS CHECK

Automatic Transmission System Check Sheet	Inspector's Name :

Customer's Name		VIN	
		Production Date	/ /
		Licence Plate No.	
Date Vehicle Brought In	/ /	Odometer Reading	km mile

Date Problem Occurred	/ /
How Often Does Problem Occur?	☐ Continuous ☐ Intermittent (times a day)

Symptoms	☐ Vehicle does not move (☐ Any position ☐ Particular position)
	☐ No up−shift (☐ 1st → 2nd ☐ 2nd → 3rd ☐ 3rd → 4th ☐ 4th → 5th)
	☐ No down−shift (☐ 5th → 4th ☐ 4th → 3rd ☐ 3rd → 2nd ☐ 2nd → 1st)
	☐ Lock−up malfunction
	☐ Shift point too high or too low
	☐ Harsh engagement (☐ N → D ☐ Lock−up ☐ Any drive position)
	☐ Slip or shudder
	☐ No kick−down
	☐ Others ( )

Check Item	Malfunction Indicator Lamp	☐ Normal ☐ Remains ON

DTC Check	1st Time	☐ Normal system code ☐ Trouble code (DTC)
	2nd Time	☐ Normal system code ☐ Trouble code (DTC)

DIDV3−01

DTC CHECK / CLEAR

1. CHECK DTC

DTCs which are stored in the ECM can be displayed with the hand−held tester or generic OBD II scan tool.

These scan tools can display pending DTCs and current DTCs. Some DTC aren't stored if the ECM doesn't detect a malfunction during consecutive driving. However, the detected malfunction during once driving is stored as pending DTC.

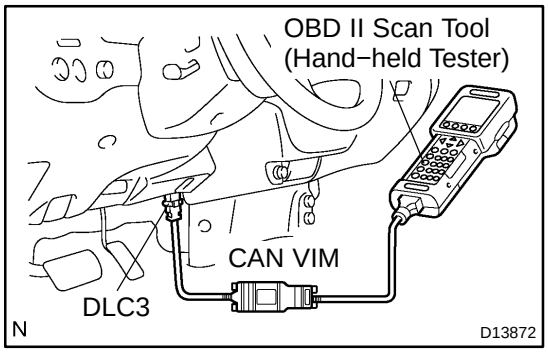

(a) Connect the hand−held tester to the Controller Area Network Vehicle Interface Module (CAN VIM). Then connect the CAN VIM to the Data Link Connector 3 (DLC3).

(b) Turn the ignition switch ON.

(c) Enter the following menus: DIAGNOSIS / ENHANCED OBD II / DTC INFO / CURRENT CODES (or PENDING CODE).

(d) Confirm the DTCs and freeze frame data and then write them down.

(e) See page DI−991 to confirm the details of the DTCs.

NOTICE:

When simulating a symptom with the scan tool to check for DTCs, use normal mode. For codes on DIAGNOSTIC TROUBLE CODE CHART subject to "2−trip detection logic", perform the following actions.

Turn the ignition switch OFF after the symptom is simulated once. Then repeat the simulation process again. When the problem has been simulated twice, the MIL illuminates and the DTCs are recorded in the ECM.

2. CLEAR DTC

(a) Connect the hand−held tester to the CAN VIM. Then connect the CAN VIM to the DLC3.

(b) Turn the ignition switch ON.

(c) Enter the following menus: DIAGNOSIS / ENHANCED OBD II / DTC INFO / CLEAR CODES and press YES.

DIDV2−01

DIAGNOSIS SYSTEM

DESCRIPTION

When troubleshooting On−Board Diagnostic (OBD II) vehicles, the vehicle must be connected to the OBD II scan tool (complying with SAE J1987). Various data output from the vehicle's ECM can then be read.

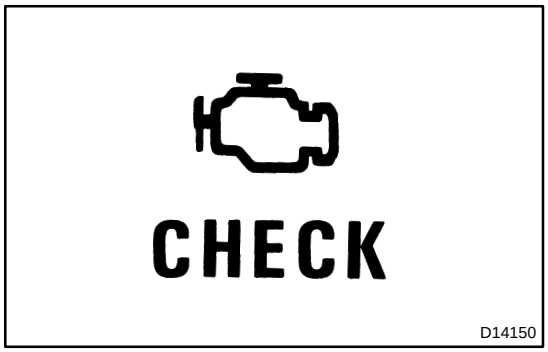

OBD II regulations require that the vehicle's on−board computer illuminates the Malfunction Indicator Lamp (MIL) on the instrument panel when the computer detects a malfunction in:
1) The emission control system/components
2) The powertrain control components (which affect vehicle emissions)
3) The computer

In addition, the applicable Diagnostic Trouble Codes (DTCs) prescribed by SAE J2012 are recorded in the ECM memory.
If the malfunction does not reoccur in 3 consecutive trips, the MIL turns off automatically but the DTCs remain recorded in the ECM memory.

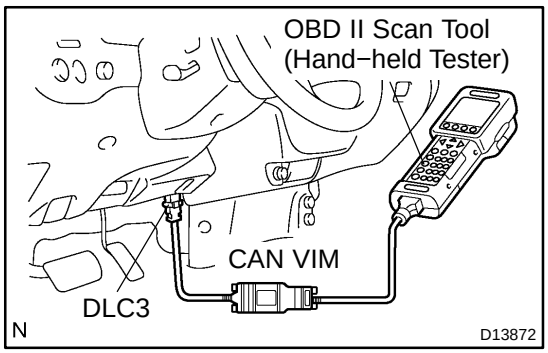

To check DTCs, connect the scan tool to the Data Link Connector 3 (DLC3) of the vehicle. The scan tool displays DTCs, the freeze frame data and a variety of the engine data.
The DTCs and freeze frame data can be erased with the scan tool (See page DI−983).

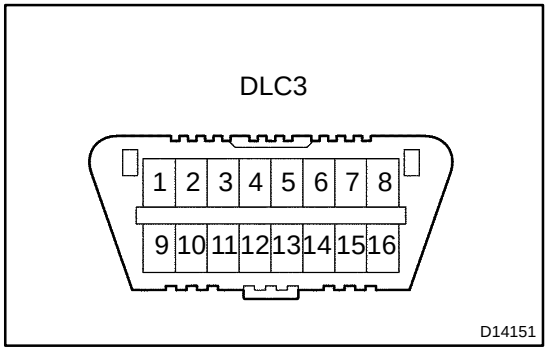

NORMAL MODE AND CHECK MODE

The diagnosis system operates in "normal mode" during normal vehicle use. In normal mode, "2−trip detection logic" is used to ensure accurate detection of malfunctions. "Check mode" is also available to technicians as an option. In check mode, "1−trip detection logic" is used for simulating malfunction symptoms and increasing the system's ability to detect malfunctions, including intermittent malfunctions.

2−TRIP DETECTION LOGIC

When a malfunction is first detected, the malfunction is temporarily stored in the ECM memory (1st trip). If the ignition switch is turned OFF and then ON again, and the same malfunction is detected again, the MIL will illuminate.

FREEZE FRAME DATA

Freeze frame data records the engine conditions (fuel system, calculated load, engine coolant temperature, fuel trim, engine speed, vehicle speed, etc.) when a malfunction is detected. When troubleshooting, freeze frame data can help determine if the vehicle was running or stopped, if the engine was warmed up or not, if the air/fuel ratio was Lean or Rich, and other data from the time the malfunction occurred.

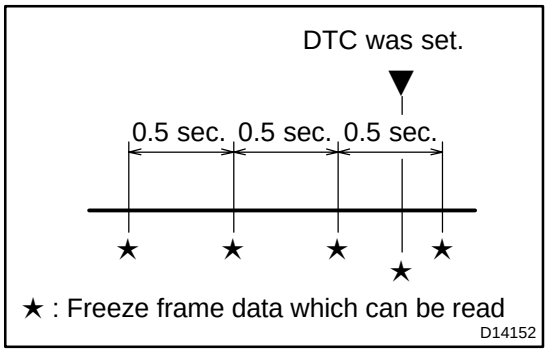

The hand−held tester records freeze frame data in five different instances: 1) 3 times before the DTC is set, 2) once when the DTC is set, and 3) once after the DTC is set. These data can be used to simulate the vehicle's condition around the time when the malfunction occurred. The data may help find the cause of the malfunction, or judge if the DTC is being caused by a temporary malfunction or not.

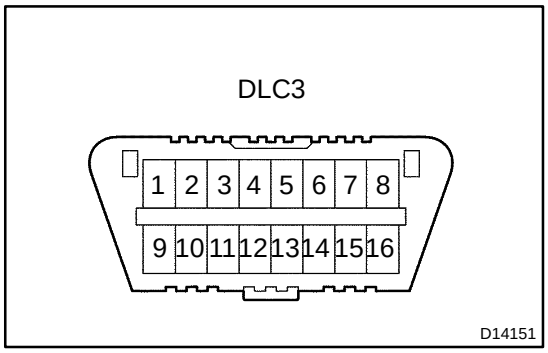

DLC3 (Data Link Connector 3)

The vehicle's ECM uses the ISO 15765−4 for communication protocol. The terminal arrangement of the DLC3 complies with SAE J1962 and matches the ISO 15765−4 format.

HINT:

Connect the cable of the hand−held tester to the DLC3, turn the ignition switch ON and attempt to use the hand−held tester. If the screen displays UNABLE TO CONNECT TO VEHICLE, a problem exists in the vehicle side or the tester side.

If the communication is normal when the tool is connected to another vehicle, inspect the DLC3 on the original vehicle.

If the communication is still impossible when the tool is connected to another vehicle, the problem is probably in the tool itself. Consult the Service Department listed in the tool's instruction manual.

Symbol	Terminal No.	Name	Reference terminal	Result	Condition
SIL	7	Bus "+" line	5 − Signal ground	Pulse generation	During transmission
CG	4	Chassis ground	Body ground	Below 1 Ω	Always
SG	5	Signal ground	Body ground	Below 1 Ω	Always
BAT	16	Battery positive	Body ground	11 to 14 V	Always
CANH	6	HIGH−level CAN bus line	CANL	54 to 69 Ω	IG switch OFF
CANH	6	HIGH−level CAN bus line	Battery positive	1 MΩ or higher	IG switch OFF
CANH	6	HIGH−level CAN bus line	CG	1 kΩ or higher	IG switch OFF
CANL	14	LOW−level CAN bus line	Battery positive	1 MΩ or higher	IG switch OFF
CANL	14	LOW−level CAN bus line	CG	1 kΩ or higher	IG switch OFF

CHECK BATTERY VOLTAGE

Battery voltage: 11 to 14 V

If voltage is below 11 V, replace the battery before proceeding.

CHECK MIL

(a) Check that the MIL illuminates when turning the ignition switch ON.

If the MIL does not illuminate, there is a problem in the MIL circuit (refer to MIL CIRCUIT on page DI−417)

(b) When the engine is started, the MIL should turn off.

ALL READINESS

For this vehicle, using the hand−held tester allows readiness codes corresponding to all DTCs to be read. When diagnosis (normal or malfunctioning) has been complete, readiness codes are set. Enter the following menus: ENHANCED OBD II / MONITOR STATUS on the hand−held tester.

DIDV6−01

DATA LIST / ACTIVE TEST

1. DATA LIST

HINT:

According to the DATA LIST displayed by the OBD II scan tool or hand−held tester, you can read the value of the switch, sensor, actuator and so on without parts removal. Reading the DATA LIST as the first step of troubleshooting is one method to shorten labor time.

(a) Warm up the engine.
(b) Turn the ignition switch off.
(c) Connect the OBD II scan tool or hand−held tester to the DLC3.
(d) Turn the ignition switch to the ON position.
(e) Push the ”ON” button of the OBD II scan tool or the hand−held tester.
(f) When you use the hand−held tester:
Select the item ”DIAGNOSIS / ENHANCED OBD II / DATA LIST”.
(g) According to the display on the tester, read the ”DATA LIST”.

Item	Measurement Item/ Range (display)	Normal Condition	Diagnostic Note
STOP LIGHT SW	Stop light SW Status/ ON or OFF	• Brake Pedal is depressed: ON • Brake Pedal is released: OFF	−
PNP SW [NSW]	PNP SW Status/ ON or OFF	Shift lever position is; P and N: ON Except P and N: OFF	When the shift lever position displayed on the hand−held tester differs from the actual position, adjustment of the PNP switch or the shift cable may be incorrect. HINT: When the failure still occurs even after adjusting these parts, See page DI−993.
LOW	PNP SW Status/ ON or OFF	• Shift lever position is 2: OFF ↓ • Shift position L switch Push: ON ↓ • Shift position L switch Push: OFF	↑
2ND	PNP SW Status/ ON or OFF	Shift lever position is; 2 and L: ON Except 2 and L: OFF	↑
3RD	PNP SW Status/ ON or OFF	Shift lever position is; 3: ON Except 3: OFF	↑
DRIVE	PNP SW Status/ ON or OFF	Shift lever position is; D: ON Except D: OFF	↑
REVERSE	PNP SW Status/ ON or OFF	Shift lever position is; R: ON Except R: OFF	↑
OVERDRV CUT SW2	O/D SW Status/ ON or OFF	• IG SW ON: ON ↓ • O/D SW Push: OFF ↓ • O/D SW Push: ON	−
SHIFT	Actual Gear Position/ 1st, 2nd, 3rd, 4th or 5th	Shift lever position is; • L: 1st • 2: 1st or 2nd • 3: 1st, 2nd or 3rd • 4(O/D OFF): 1st, 2nd, 3rd or 4th • D: 1st, 2nd, 3rd, 4th or 5th	−

LOCK UP SOL	Lock Up Solenoid Status/ ON or OFF	• Lock Up: ON • Except Lock Up: OFF	−
SOLENOID (SLT)	Shift Solenoid SLT Status/ ON or OFF	• Accelerator pedal is depressed: OFF • Accelerator pedal is released: ON	−
SOLENOID (SLU)	Shift Solenoid SLU Status/ ON or OFF	• Lock Up: ON • Except Lock Up: OFF	−
AT FLUID TEMP 1	ATF Temp. Sensor No.1 Value/ min.: −40°C (−40°F) max.: 215°C (419°F)	• After Stall Test; Approx. 80°C (176°F) • Equal to ambient temperature when cold soak	If the value is ”−40°C (−40°F)” or ”215°C (419°F)”, ATF temp. sensor No.1 circuit is open or shorted.
AT FLUID TEMP 2	ATF Temp. Sensor No.2 Value/ min.: −40°C (−40°F) max.: 215°C (419°F)	• After Stall Test; Approx. 80°C (176°F) • Equal to ambient temperature when cold soak	If the value is ”−40°C (−40°F)” or ”215°C (419°F)”, ATF temp. sensor No.2 circuit is open or shorted.
SPD (SP2)	Output shaft Speed/ min.: 0 km/h (0 mph) max.: 255 km/h (158 mph)	Vehicle stopped: 0 km/h (0 mph) [HINT] Equal to vehicle speed	−
SPD (NT)	Input Turbine Speed/ display: 50 r/min	[HINT] • Lock−up ON (After warming up the engine); Input Turbine speed (NT) equal to the engine speed. • Lock−up OFF (Idling at N position); Input Turbine speed (NT) nearly equal to the engine speed.	−

2. ACTIVE TEST

HINT:

Performing the ACTIVE TEST using the hand−held tester allows the relay, VSV, actuator and so on to operate without parts removal. Performing the ACTIVE TEST as the first step of troubleshooting is one method to shorten labor time.

It is possible to display the DATA LIST during the ACTIVE TEST.

(a) Warm up the engine.
(b) Turn the ignition switch off.
(c) Connect the hand−held tester to the DLC3.
(d) Turn the ignition switch to the ON position.
(e) Turn on the tester.
(f) Select the item ”DIAGNOSIS / ENHANCED OBD II / ACTIVE TEST”.
(g) According to the display on the tester, perform the ”ACTIVE TEST”.

Item	Test Details	Diagnostic Note
SHIFT	[Test Details] Operate the shift solenoid valve and set each shift position by yourself. [Vehicle Condition] Less than 50 km/h (31 mph) [Others] • Press ”→” button: Shift up • Press ”←” button: Shift down	Possible to check the operation of the shift solenoid valves.
LOCK UP	[Test Details] Control the shift solenoid SLU to set the automatic transmission to the lock−up condition. [Vehicle Condition] • Throttle valve opening angle: Less than 35 % • Vehicle Speed: 60 km/h (37 mph) or more	Possible to check the SLU operation.
LINE PRESS UP *	[Test Details] Operate the shift solenoid SLT and raise the line pressure. [Vehicle Condition] • Vehicle Stopped. • IDL: ON [HINT] OFF: Line pressure up (When the active test of ”Control the Line Pressure Up” is performed, the ECM commands the SLT solenoid to turn off). ON: No action (normal operation)	−

*: ”LINE PRESS UP” in the ACTIVE TEST is performed to check the line pressure changes by connecting the SST to the automatic transaxle, which is used in the HYDRAULIC TEST (See page DI−958) as well.

HINT:

The pressure values in ACTIVE TEST and HYDRAULIC TEST are different from each other.

DIDUL−01

DEFINITION OF TERMS

Term	Definition
Monitor description	Description of what the ECM monitors and how it detects malfunctions (monitoring purpose and its details).
Related DTCs	A group of diagnostic trouble codes that are output by the ECM based on the same malfunction detection logic.
Typical enabling condition	Preconditions that allow the ECM to detect malfunctions. With all preconditions satisfied, the ECM sets the DTC when the monitored value(s) exceeds the malfunction threshold(s).
Sequence of operation	The priority order that is applied to monitoring, if multiple sensors and components are used to detect the malfunction. While another sensor is being monitored, the next sensor or component will not be monitored until the previous monitoring has concluded.
Required sensor/components	The sensors and components that are used by the ECM to detect malfunctions.
Frequency of operation	The number of times that the ECM checks for malfunctions per driving cycle. ”Once per driving cycle” means that the ECM detects malfunction only one time during a single driving cycle. ”Continuous” means that the ECM detects malfunction every time when enabling condition is met.
Duration	The minimum time that the ECM must sense a continuous deviation in the monitored value(s) before setting a DTC. This timing begins after the ”typical enabling conditions” are met.
Malfunction thresholds	Beyond this value, the ECM will conclude that there is a malfunction and set a DTC.
MIL operation	MIL illumination timing after a defect is detected. ”Immediately” means that the ECM illuminates MIL the instant the ECM determines that there is a malfunction. ”2 driving cycle” means that the ECM illuminates MIL if the same malfunction is detected again in the 2nd driving cycle.
Component operating range	Normal operation range of sensors and solenoids under normal driving conditions. Use these ranges as a reference. They cannot be used to judge if a sensor or solenoid is defective or not.

DIDV7−01

DIAGNOSTIC TROUBLE CODE CHART

If a DTC is displayed during the DTC check, check the parts listed in the table below and proceed to the page given.

HINT:

- *1 : ● ... The MIL (Malfunction Indicator Lamp) lights up
- *2 : ○ ... The ECM memorizes the trouble code if the ECM detects the DTC detection condition.
- This DTC may be output when the clutch, brake and gear components etc. inside the automatic transmission are damaged.

DTC No. (See Page)	Detection Item	Trouble Area	MIL *1	Memory *2
P0500 (DI−257)	Vehicle Speed Sensor ”A”	• Open or short in speed sensor (SP2) circuit • Speed sensor (SP2) • ECM	●	○
P0705 (DI−993)	Transmission Range Sensor Circuit Malfunction (PRNDL Input)	• Open or short in park/neutral position switch circuit • Park/neutral position switch • ECM	●	○
P0710 (DI−999)	Transmission Fluid Temperature Sensor ”A” Circuit	• Open or short in ATF temperature sensor No.1 circuit • Transmission wire (ATF temperature sensor No.1) • ECM	●	○
P0711 (DI−1005)	Transmission Fluid Temperature Sensor ”A” Performance	• Transmission wire (ATF temperature sensor No.1)	●	○
P0712 (DI−999)	Transmission Fluid Temperature Sensor ”A” Circuit Low Input	• Short in ATF temperature sensor No.1 circuit • Transmission wire (ATF temperature sensor No.1) • ECM	●	○
P0713 (DI−999)	Transmission Fluid Temperature Sensor ”A” Circuit High Input	• Open in ATF temperature sensor No.1 circuit • Transmission wire (ATF temperature sensor No.1) • ECM	●	○
P0717 (DI−1008)	Input Speed Sensor Circuit No Signal	• Open or short in speed sensor (NT) circuit • Speed sensor (NT) • ECM • Automatic transmission (clutch, brake or gear, etc.)	●	○
P0722 (DI−1013)	Output Speed Sensor Circuit No Signal	• Open or short in speed sensor (SP2) circuit • Speed sensor (SP2) • ECM • Automatic transmission (clutch, brake or gear, etc.)	●	○
P0724 (DI−1017)	Brake Switch ”B” Circuit High	• Short in stop light switch signal circuit • Stop light switch • ECM	●	○
P0748 (DI−1020)	Pressure Control Solenoid ”A” Electrical (Shift Solenoid Valve SL1)	• Open or short in shift solenoid valve SL1 circuit • Shift solenoid valve SL1 • ECM	●	○
P0751 (DI−1025)	Shift Solenoid ”A” Performance (Shift Solenoid Valve S1)	• Shift solenoid valve S1 remains open or closed • Valve body is blocked • Automatic transmission (clutch, brake or gear, etc.)	●	○
P0756 (DI−1031)	Shift Solenoid ”B” Performance (Shift Solenoid Valve S2)	• Shift solenoid valve S2 remains open or closed • Valve body is blocked • Automatic transmission (clutch, brake or gear, etc.)	●	○
P0771 (DI−1037)	Shift Solenoid ”E” Performance (Shift Solenoid Valve SR)	• Shift solenoid valve SR remains open or closed • Shift solenoid valve SL1 remains open or closed • Valve body is blocked • Automatic transmission (clutch, brake or gear, etc.)	●	○

P0776 (DI−1042)	Pressure Control Solenoid ”B” Performance (Shift Solenoid Valve SL2)	• Shift solenoid valve SL2 remains open or closed • Valve body is blocked • Automatic transmission (clutch, brake or gear, etc.)	●	○
P0778 (DI−1048)	Pressure Control Solenoid ”B” Electrical (Shift Solenoid Valve SL2)	• Open or short in shift solenoid valve SL2 circuit • Shift solenoid valve SL2 • ECM	●	○
P0781 (DI−1053)	1−2 Shift (1 −2 Shift Valve)	• Valve body is blocked up or stuck (1−2 shift valve) • Automatic transmission (clutch, brake or gear, etc.)	●	○
P0973 (DI−1058)	Shift Solenoid ”A” Control Circuit Low (Shift Solenoid Valve S1)	• Short in shift solenoid valve S1 circuit • Shift solenoid valve S1 • ECM	●	○
P0974 (DI−1058)	Shift Solenoid ”A” Control Circuit High (Shift Solenoid Valve S1)	• Open in shift solenoid valve S1 circuit • Shift solenoid valve S1 • ECM	●	○
P0976 (DI−1063)	Shift Solenoid ”B” Control Circuit Low (Shift Solenoid Valve S2)	• Short in shift solenoid valve S2 circuit • Shift solenoid valve S2 • ECM	●	○
P0977 (DI−1063)	Shift Solenoid ”B” Control Circuit High (Shift Solenoid Valve S2)	• Open in shift solenoid valve S2 circuit • Shift solenoid valve S2 • ECM	●	○
P0985 (DI−1068)	Shift Solenoid ”E” Control Circuit Low (Shift Solenoid Valve SR)	• Short in shift solenoid valve SR circuit • Shift solenoid valve SR • ECM	●	○
P0986 (DI−1068)	Shift Solenoid ”E” Control Circuit High (Shift Solenoid Valve SR)	• Open in shift solenoid valve SR circuit • Shift solenoid valve SR • ECM	●	○
P2714 (DI−1073)	Pressure Control Solenoid ”D” Performance (Shift Solenoid Valve SLT)	• Shift solenoid valve SLT remains open or closed • Valve body is blocked • Automatic transmission (clutch, brake or gear, etc.)	●	○
P2716 (DI−1079)	Pressure Control Solenoid ”D” Electrical (Shift Solenoid Valve SLT)	• Open or short in shift solenoid valve SLT circuit • Shift solenoid valve SLT • ECM	●	○
P2740 (DI−1083)	Transmission Fluid Temperature Sensor ”B” Circuit	• Open or short in ATF temperature sensor No.2 circuit • Transmission wire (ATF temperature sensor No.2) • ECM	●	○
P2742 (DI−1083)	Transmission Fluid Temperature Sensor ”B” Circuit Low Input	• Short in ATF temperature sensor No.2 circuit • Transmission wire (ATF temperature sensor No.2) • ECM	●	○
P2743 (DI−1083)	Transmission Fluid Temperature Sensor ”B” Circuit High Input	• Open in ATF temperature sensor No.2 circuit • Transmission wire (ATF temperature sensor No.2) • ECM	●	○
P2757 (DI−1089)	Torque Converter Clutch Pressure Control Solenoid Performance (Shift Solenoid Valve SLU)	• Shift solenoid valve SLU remains open or closed • Valve body is blocked • Torque converter clutch • Automatic transmission (clutch, brake or gear, etc.) • Line pressure is too low	●	○
P2759 (DI−1097)	Torque Converter Clutch Pressure Control Solenoid Control Circuit Electrical (Shift Solenoid Valve SLU)	• Open or short in shift solenoid valve SLU circuit • Shift solenoid valve SLU • ECM	●	○

DIDV5−01

FAIL−SAFE CHART

1. FAIL−SAFE

This function minimizes the loss of the ECT functions when any malfunction occurs in a sensor or solenoid.

Malfunction Part	Function
Output Speed Sensor (SP2)	During an output speed sensor malfunction, shift control is effected through the input speed sensor signal (NT).
ATF Temp. Sensor No. 1	During an ATF temperature sensor No. 1 malfunction, up−shift to the 5th and flex lock−up clutch control are prohibited.
Shift Solenoid Valve S1, S2 and SR	The current to the failed solenoid valve is cut off and control is effected by operating the other solenoid valves with normal operation. Shift control is effected depending on the failed solenoid as described in the table on the next page.
Shift Solenoid Valve SL1 and SL2	During a solenoid valve SL1 or SL2 malfunction, up−shift to the 5th is prohibited.
Shift Solenoid Valve SLU	During a solenoid valve SLU malfunction, the current to the solenoid valve is stopped. This stops lock−up control and flex lock−up control, fuel economy decreases.
Shift Solenoid Valve SLT	During a solenoid valve SLT malfunction, the current to the solenoid valve is stopped. This stops line pressure optimal control, the shift shock increases. However, shifting is effected through normal clutch pressure control.

Fail Safe Function:

If either of the shift solenoid valve circuits has an open or short failure, the ECM turns the other shift solenoid ”ON” and ”OFF” in order to shift into the gear positions shown in the table below.

In case of a short circuit, the ECM stops sending current to the short circuited solenoid.

Even if starting the engine again in the fail−safe mode, the gear position remains in the same position.

○: ON
X: OFF
→: Condition in the electrical malfunction is shown on the left of "→".
Condition in the fail−safe mode is shown on the right of "→".
E/B: Engine brake.

Position	NORMAL						S1 OFF						S2 OFF						SR OFF					
	Gear	S1	S2	SR	SL1	SL2	Gear	S1	S2	SR	SL1	SL2	Gear	S1	S2	SR	SL1	SL2	Gear	S1	S2	SR	SL1	SL2
"R"	R	○	×	×	×	○	R	×	×	×	×	○	R	○	×	×	×	○	R	○	×	×	×	○
"D"	1 st	○	×	×	×	○	4 th → 3 rd	×	× → ○	×	×	○	1 st	○	×	×	×	○	1 st	○	×	×	×	○
	2 nd	○	○	×	×	○	3 rd	×	○	×	×	○	1 st → 4 th	○ → ×	×	×	×	○	2 nd	○	○	×	×	○
	3 rd	×	○	×	×	○	3 rd	×	○	×	×	○	4 th	×	×	×	×	○	3 rd	×	○	×	×	○
	4 th	×	×	×	×	○	4 th	×	×	×	×	○	4 th	×	×	×	×	○	4 th	×	×	×	×	○
	5 th	×	×	○	○	×	5 th	×	×	○	○	×	5 th	×	×	○	○	×	4 th	×	×	×	○	×
"3"	1 st	○	×	×	×	○	3 rd → 3 rd E/B	×	× → ○	×	×	○ → ×	1 st	○	×	×	×	○	1 st	○	×	×	×	○
	2 nd	○	○	×	×	○	3 rd → 3 rd E/B	×	○	×	×	○ → ×	1 st → 3 rd E/B	○ → ×	×	×	×	○ → ×	2 nd	○	○	×	×	○
	3 rd E/B	×	○	×	×	×	3 rd E/B	×	○	×	×	×	3 rd E/B	×	×	×	×	×	3 rd E/B → 3 rd	×	○	×	×	× → ○
	4 th	×	×	○	×	○	4 th	×	×	○	×	○	4 th	×	×	○	×	○	3 rd	×	× → ○	×	×	○ → ○
	5 th	×	×	○	○	×	5 th	×	×	○	○	×	5 th	×	×	○	○	×	3 rd E/B → 3 rd	×	× → ○	×	○ → ×	× → ○
"2"	1 st	○	×	×	×	○	1 st	×	×	×	×	○	1 st	○	×	×	×	○	1 st	○	×	×	×	○
	2 nd E/B	○	○	○	×	×	3 rd E/B	×	○	○	×	×	2 nd E/B → 4 th	○ → ×	×	○	×	× → ○	2 nd	○	○	×	×	×
	3 rd E/B	×	○	○	×	×	3 rd E/B	×	○	○	×	×	Fail 4th	×	×	○	×	× → ○	2 nd	× → ○	○	×	×	×
	4 th	×	×	○	×	○	4 th	×	×	○	×	○	4 th	×	×	○	×	○	1 st → 2 nd	× → ○	× → ○	×	×	○ → ×
	5 th	×	×	○	○	×	5 th	×	×	○	○	×	5 th	×	×	○	○	×	1 st E/B → 2 nd	× → ○	○	×	○ → ×	×
"L"	1 st E/B	○	×	×	×	×	1 st E/B	×	×	×	×	×	1 st E/B	○	×	×	×	×	1 st E/B	○	×	×	×	×
	2 nd E/B	○	○	○	×	×	3 rd E/B	×	○	○	×	×	2 nd E/B → 4 th	○ → ×	×	○	×	× → ○	2 nd	○	○	×	×	×
	3 rd E/B	×	○	○	×	×	3 rd E/B	×	○	○	×	×	Fail 4 th	×	×	○	×	× → ○	2 nd	× → ○	○	×	×	×
	4 th	×	×	○	×	○	4 th	×	×	○	×	○	4 th	×	×	○	×	○	1 st → 2 nd	× → ○	× → ○	×	×	○ → ×
	5 th	×	×	○	○	×	5 th	×	×	○	○	×	5 th	×	×	○	○	×	1 st E/B → 2 nd	× → ○	× → ○	×	○ → ×	×

○: ON
X: OFF
→: Condition in the electrical malfunction is shown on the left of "→".
Condition in the fail−safe mode is shown on the right of "→".
E/B: Engine brake.

Position	S1 S2 OFF						S2 SR OFF						S1 SR OFF						S1 S2 SR OFF					
	Gear	S1	S2	SR	SL1	SL2	Gear	S1	S2	SR	SL1	SL2	Gear	S1	S2	SR	SL1	SL2	Gear	S1	S2	SR	SL1	SL2
"R"	R	X	X	X	X	○	R	○	X	X	X	○	R	X	X	X	X	○	R	X	X	X	X	○
"D"	4 th	X	X	X	X	○	1 st	○	X	X	X	○	4 th → 3 rd	X	X→○	X	X	○	4 th	X	X	X	X	○
	4 th	X	X	X	X	○	1 st → 4 th	○→X	X	X	X	○	3 rd	X	○	X	X	○	4 th	X	X	X	X	○
	4 th	X	X	X	X	○	4 th	X	X	X	X	○	3 rd	X	○	X	X	○	4 th	X	X	X	X	○
	4 th	X	X	X	X	○	4 th	X	X	X	X	○	4 th	X	X	X	X	○	4 th	X	X	X	X	○
	5 th	X	X	○	○	X	4 th	X	X	X	○→X	X→○	4 th	X	X	X	○→X	X→○	4 th	X	X	X	○→X	X→○
"3"	3 rd → 3 rd E/B	X	X	X	X	○→X	1 st	○	X	X	X	○	3 rd	X	X→○	X	X	○→○	3 rd	X	X	X	X	○→○
	3 rd → 3 rd E/B	X	X	X	X	○→X	1 st → 3 rd	○→X	X	X	X	○→○	3 rd	X	○	X	X	○→○	3 rd	X	X	X	X	○→○
	3 rd E/B	X	X	X	X	X	3 rd E/B → 3 rd	X	X	X	X	X→○	3 rd E/B → 3 rd	X	○	X	X	X→○	3 rd E/B → 3 rd	X	X	X	X	X→○
	4 th	X	X	○	X	○	3 rd	X	X	X	X	○→○	3 rd	X	X→○	X	X	○→○	3 rd	X	X	X	X	○→○
	5 th	X	X	○	○	X	1 st E/B → 3 rd	X	X	X	○→X	X→○	3 rd E/B → 3 rd	X	X→○	X	○→X	X→○	3 rd E/B → 3 rd	X	X	X	○→X	X→○
"2"	1 st	X	X	X	X	○	1 st	○	X	X	X	○	1 st	X	X	X	X	○	1 st	X	X	X	X	○
	Fail 4 th	X	X	○	X	X→○	1 st E/B → 1 st	○	X	X	X	X→○	2 nd	X	○	X	X	X	1 st E/B → 1 st	X	X	X	X	X→○
	Fail 4 th	X	X	○	X	X→○	1 st E/B → 1 st	X→○	X	X	X	X→○	2 nd	X	○	X	X	X	1 st E/B → 1 st	X	X	X	X	X→○
	4 th	X	X	○	X	○	1 st	X→○	X	X	X	○	1 st → 2nd	X	X→○	X	X	○→X	1 st	X	X	X	X	○
	5 th	X	X	○	○	X	1 st E/B → 1 st	X→○	X	X	○→X	X→○	1 st E/B → 2nd	X	X→○	X	○→X	X	1 st E/B → 1 st	X	X	X	○→X	X→○
"L"	1 st E/B	X	X	X	X	X	1 st E/B	○	X	X	X	X	1 st E/B	X	X	X	X	X	1 st E/B	X	X	X	X	X
	Fail 4 th	X	X	○	X	X→○	1 st E/B → 1 st	○	X	X	X	X→○	2 nd	X	○	X	X	X	1 st E/B → 1 st	X	X	X	X	X→○
	Fail 4 th	X	X	○	X	X→○	1 st E/B → 1 st	X→○	X	X	X	X→○	2 nd	X	○	X	X	X	1 st E/B → 1 st	X	X	X	X	X→○
	4 th	X	X	○	X	○	1 st	X→○	X	X	X	○	1 st → 2nd	X	X→○	X	X	○→X	1 st	X	X	X	X	○
	5 th	X	X	○	○	X	1 st E/B → 1 st	X→○	X	X	○→X	X→○	1 st E/B → 2nd	X	X→○	X	○→X	X	1 st E/B → 1 st	X	X	X	○→X	X→○

DIDUQ−01

HOW TO PROCEED WITH TROUBLESHOOTING

Items inside ▱ are titles of pages in this manual, with the page number indicated in the bottom portion. See the indicated pages for detailed explanations.

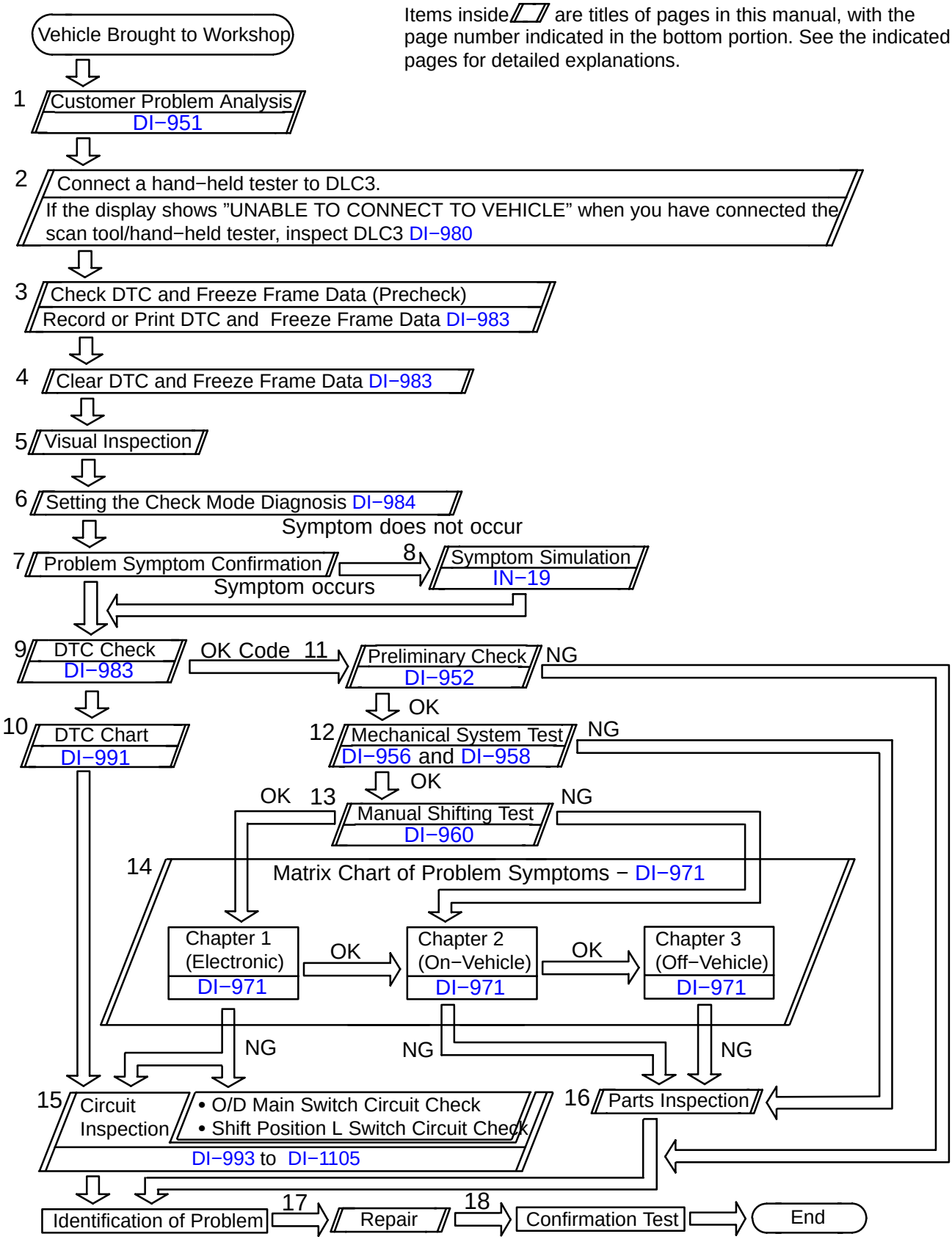

DIDUV−01

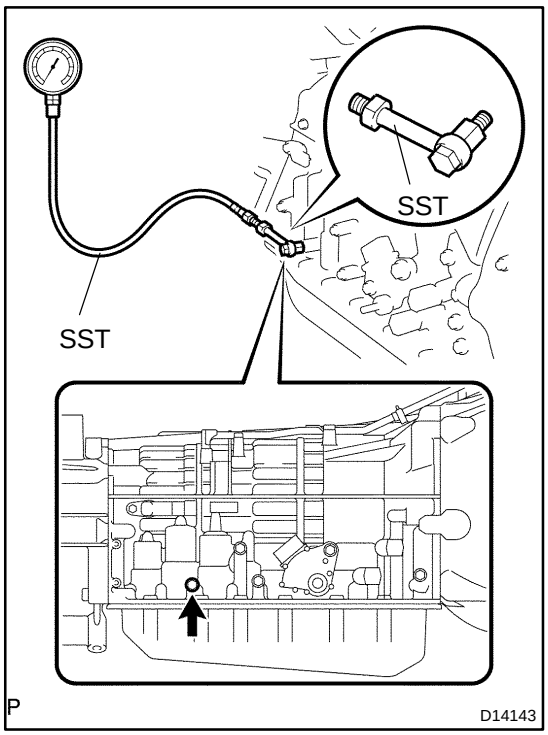

HYDRAULIC TEST

1. PERFORM HYDRAULIC TEST

Measure the line pressure.

NOTICE:

- **Perform the test at the normal operating ATF (Automatic Transmission Fluid) temperature: 50 to 80°C (122 to 176°F).**
- **The line pressure test should always be carried out in pairs. One technician should observe the conditions of wheels or wheel stoppers outside the vehicle while the other is performing the test.**
- **Be careful to prevent SST hose from interfering with the exhaust pipe.**
- **This check must be conducted after checking and adjusting engine.**
- **Perform under condition that A/C is OFF.**
- **When conducting stall test, do not continue more than 10 seconds.**

(1) Warm up the ATF (Automatic Transmission Fluid).
(2) Lift the vehicle up.
(3) Remove the test plug on the transmission case center right side and connect SST.

SST 09992−00095 (09992−00231, 09992−00271)

(4) Fully apply the parking brake and chock the 4 wheels.
(5) Start the engine and check idling speed.
(6) Keep your left foot pressing firmly on the brake pedal and shift into D position.
(7) Measure the line pressure when the engine is idling.
(8) Depress the accelerator pedal all the way down. Quickly read the highest line pressure when engine speed reaches stall speed.
(9) In the same manner, do the test in R position.

Specified line pressure:

Condition	D position kPa (kgf / cm^2, psi)	R position kPa (kgf / cm^2, psi)
Idling	363 to 423 kPa (3.7 to 4.3 kgf/cm^2, 53 to 61 psi)	484 to 564 kPa (4.9 to 5.8 kgf/cm^2, 70 to 82 psi)
Stall test	1,282 to 1,381 kPa (13.1 to 14.1 kgf/cm^2, 186 to 200 psi)	1,218 to 1,338 kPa (12.4 to 13.6 kgf/cm^2, 177 to 194 psi)

Evaluation

Problem	Possible cause
Measured values are higher than specified in all positions	• Shift solenoid valve (SLT) defective • Regulator valve defective
Measured values are lower than specified in all positions	• Shift solenoid valve (SLT) defective • Regulator valve defective • Oil pump defective
Pressure is low in the D position only	• D position circuit fluid leak • Clutch No.1 (C_1) defective
Pressure is low in the R position only	• R position circuit fluid leak • Clutch No.3 (C_3) defective • Brake No.4 (B_4) defective

DIDUX−01

INITIALIZATION

1. RESET MEMORY

NOTICE:

- **Perform the RESET MEMORY (AT initialization) when replacing the automatic transmission assy or ECM.**
- **The RESET MEMORY can be performed only with the Hand−held tester.**

HINT:

The ECM memorizes the condition that the ECT controls the automatic transmission assy and engine assy according to those characteristics. Therefore, when the automatic transmission assy, engine assy, or ECM has been replaced, it is necessary to reset the memory so that the ECM can memorize the new information. Reset procedure is as follows.

(a) Turn the ignition switch off.
(b) Connect the hand−held tester to the DLC3.
(c) Turn the ignition switch to the ON position.
(d) Turn the hand−held tester main switch on.
(e) Select the item ”DIAGNOSIS/ENHANCED OBD II”.
(f) Perform the reset memory procedure from the ENGINE menu.

NOTICE:

After performing the RESET MEMORY, be sure to perform the ROAD TEST (See page DI−953) described earlier.

HINT:

The ECM learns through use of the ROAD TEST.

Tester menu flow:

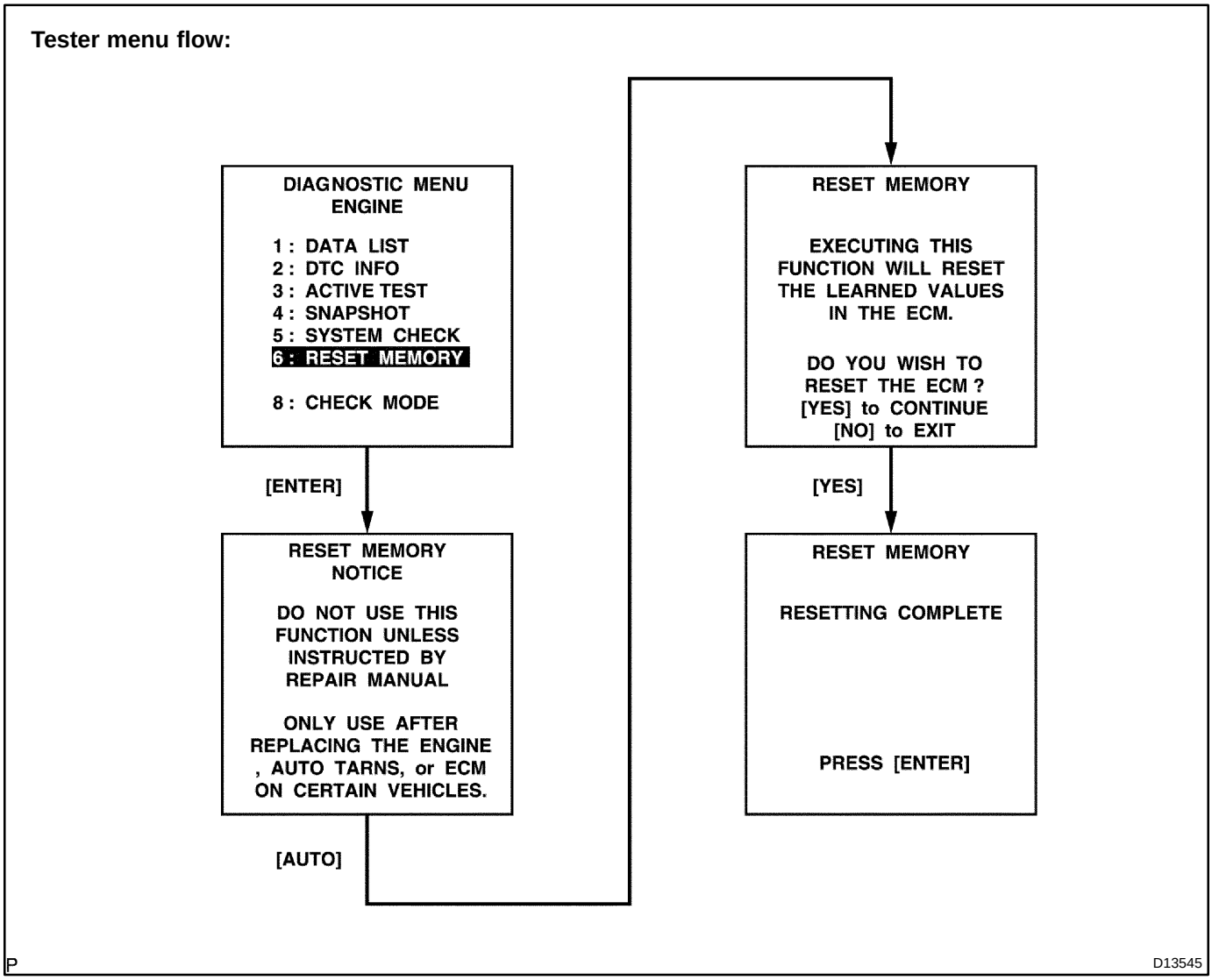

DIDUN−01

LOCATION

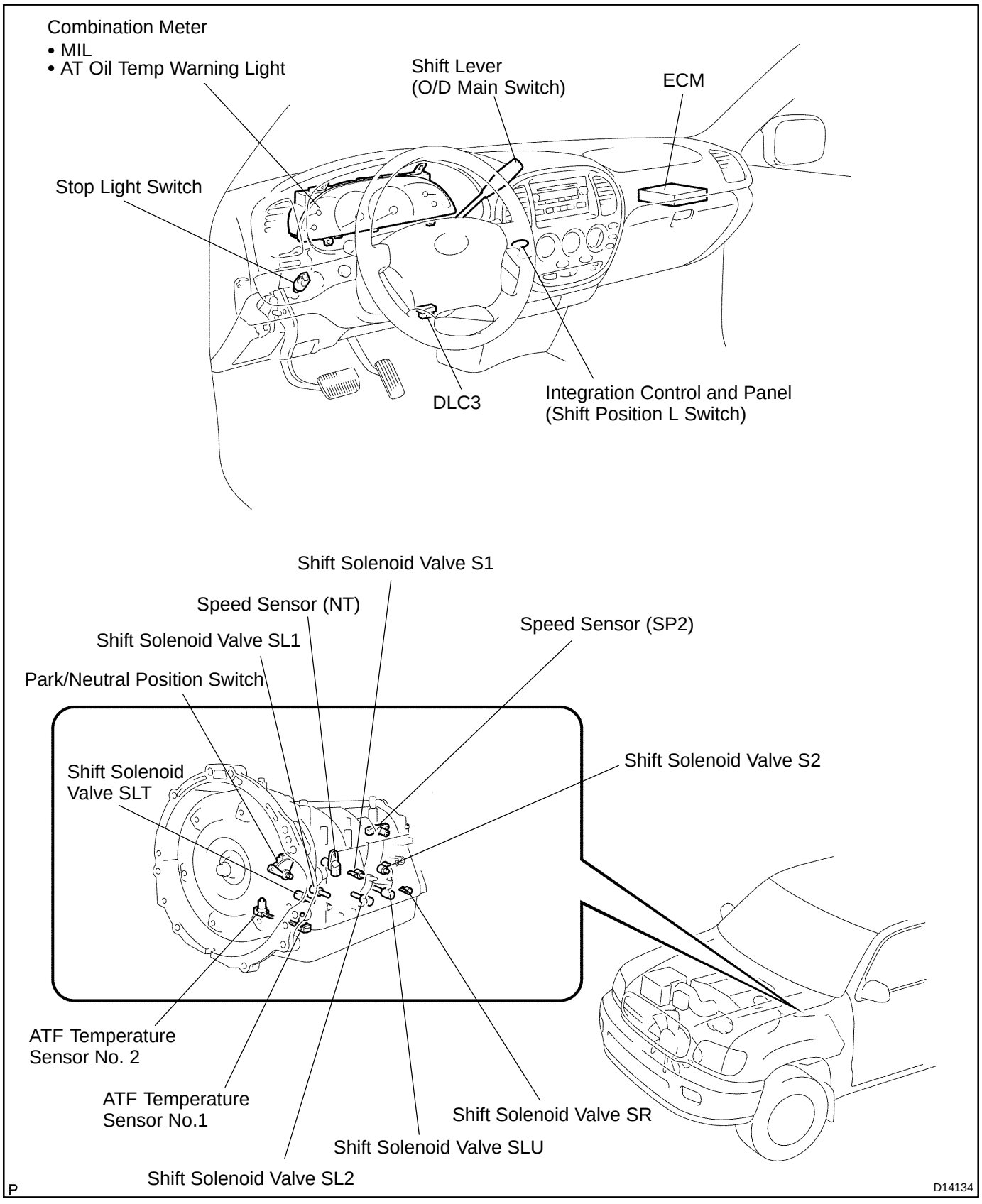

DIDUY−01

LIST OF DISABLE A MONITOR

HINT:

This table indicates ECM monitoring status for the items in the upper columns if the DTCs in each line on the left are being set.

As for the ”X” mark, when the DTC on the left is stored, detection of the DTC in the upper column is not performed.

Monitor detected malfunction

Fault code	Fault code	Component/ system	Monitor disablement (X - disabled)																										
			P0010,P0020	P0011	P0012	P0016,P0018	P0021	P0022	P0030,50	P0135,P0155	P0036,56	P0043,44,63,64	P0100	P0101	P0105	P0106	P0110	P0115	P0116	P0120,P0121	P0125	P0128	P0130-P0153	P0134,P0154	P0136,P0156	P0142,P0162	P0171,P0172	P0300-P0308
			P0010,P0020	P0011	P0012	P0016,P0018	P0021	P0022	P0031,32,51,52	P0031,32,51,52	P0037,38,57,58	P0043,44,63,64	P0100-P0103	P0101	P0105-P0108	P0106	P0110-P0113	P0115-P0118	P0116	P0120-P0223,P2135	P0125	P0128	P0130-P0153	P0134,P0154	P0136,P0156	P0142,P0162	P0171,P0172	P0300-P0308
			VVT VSV1,2	VVT System1 -Advance	VVT System1 - Retard	VVT System - Misalignment	VVT System2 - Advance	VVT System2 - Retard	O2 Sensor Heater - Sensor1	A/F Sensor Heater - Sensor1	O2 Sensor Heater - Sensor2	O2 Sensor Heater - Sensor3	MAF sensor	MAF sensor	MAP sensor	MAP sensor	IAT sensor	ECT sensor	ECT sensor	TP sensor	Insufficient ECT for Closed Loop	Thermostat	O2 Sensor -Sensor1	O2 Sensor, A/F Sensor(No Activity) - Sensor1	O2 Sensor - Sensor2	O2 Sensor - Sensor3	Fuel system	Misfire
P0010,P0020	P0010,P0020	VVT VSV1,2																				X							
P0011	P0011	VVT System1 - Advance				X		X														X					X		
P0012	P0012	VVT System1 - Retard				X		X														X					X		
P0016,P0018	P0016,P0018	VVT System - Misalignment																											
P0021	P0021	VVT System2 - Advance			X	X																X					X		
P0022	P0022	VVT System2 - Retard			X	X																X					X		
P0030,50	P0031,32,51,52	O2 Sensor Heater - Sensor1																				X	X	X	X	X	X		
P0135,P0155	P0031,32,51,52	A/F Sensor Heater - Sensor1																				X			X	X	X		
P0036,56	P0037,38,57,58	O2 Sensor Heater - Sensor2																							X	X			
P0043,44,63,64	P0043,44,63,64	O2 Sensor Heater - Sensor3																								X			
P0100,P0101	P0100-P0103	MAF sensor		X	X		X	X											X		X	X	X	X	X	X	X	X	X
P0105,P0106	P0105-P0108	MAP sensor		X	X		X	X											X		X	X	X	X	X	X	X	X	X
P0110	P0110-P0113	IAT sensor																			X	X	X	X	X	X			X
P0115,P0116	P0115-P0118	ECT sensor		X	X	X	X	X						X		X					X	X	X	X	X	X	X	X	X
P0120,P0121	P0120-P0223,P2135	TP sensor												X		X							X	X	X	X	X	X	X
P0125	P0125	Insufficient ECT for Closed Loop		X	X		X	X						X		X						X	X	X	X	X	X	X	X
P0128	P0128	Thermostat																											
P0130-P0153	P0130-P0153	O2 Sensor - Sensor1																				X		X	X	X			
P0134,P0154	P0134,P0154	O2 Sensor, A/F Sensor(No Activity) - Sensor1								X												X	X		X	X	X		
P0136,P0156	P0136,P0156	O2 Sensor - Sensor2																								X			
P0142,P0162	P0142,P0162	O2 Sensor - Sensor3																									X		
P0171,P0172	P0171,P0172	Fuel system																				X	X	X	X	X			
P0300-P0308	P0300-P0308	Misfire							X													X	X	X	X	X			
P0325,P0330	P0325-P0333	Knock sensor																											X
P0335	P0335	CKP sensor		X	X		X	X						X		X						X	X	X	X	X	X	X	X
P0340, P0341	P0340, P0341	CMP sensor		X	X		X	X						X		X						X	X	X	X	X	X	X	X
P0340-P0346	P0340-P0346	VVT sensor1,2																				X							
P0351-P0358	P0351-P0358	Ignitor		X	X		X	X														X					X		
P0385	P0385	CKP sensor 2												X		X						X	X	X	X	X	X	X	X
P0401	P0401	EGR system (closed)																				X					X		
P0402	P0402	EGR system (open)																				X	X	X	X	X	X		
P0405,P0409	P0405-P0409	Lift sensor																											
P0420,P0430	P0420,P0430	Catalyst																											
P0442-P0456	P0442-P0456	EVAP system																					X	X	X	X			
P0450,P0451	P0450-P0453	EVAP press sensor																											

C A21570

A22717

Monitor detected malfunction

Fault code	Fault code	Component/ system	Monitor disablement (X - disabled)																												
			P0010,P0020	P0011	P0012	P0016,P0018	P0021	P0022	P0030,50	P0135,P0155	P0036,56	P0043,44,63,64	P0100	P0101	P0105	P0106	P0110	P0115	P0116	P0120,P0121	P0125	P0128	P0130-P0153	P0134,P0154	P0136,P0156	P0142,P0162	P0171,P0172	P0300-P0308			
			P0010,P0020	P0011	P0012	P0016,P0018	P0021	P0022	P0031,32,51,52	P0031,32,51,52	P0037,38,57,58	P0043,44,63,64	P0100-P0103	P0101	P0105-P0108	P0106	P0110-P0113	P0115-P0118	P0116	P0120-P0223,P2135	P0125	P0128	P0130-P0153	P0134,P0154	P0136,P0156	P0142,P0162	P0171,P0172	P0300-P0308			
			VVT VSV1,2	VVT System1 -Advance	VVT System1 - Retard	VVT System - Misalignment	VVT System2 - Advance	VVT System2 - Retard	O2 Sensor Heater - Sensor1	A/F Sensor Heater - Sensor1	O2 Sensor Heater - Sensor2	O2 Sensor Heater - Sensor3	MAF sensor	MAF sensor	MAP sensor	MAP sensor	IAT sensor	ECT sensor	ECT sensor	TP sensor	Insufficient ECT for Closed Loop	Thermostat	O2 Sensor -Sensor1	O2 Sensor, A/F Sensor(No Activity) - Sensor1	O2 Sensor - Sensor2	O2 Sensor - Sensor3	Fuel system	Misfire			
P0500	P0500	VSS																				X	X	X	X	X	X	X	X		
P0511	P0511	IAC valve																					X								
P0510	P0510	Idle switch												X		X						X	X		X	X	X	X	X		
P0560	P0560	System Voltage																													
P0617	P0617	Starter signal																													
P0705	P0705	Shift lever position switch																													
P0710	P0710-P0713	Trans fluid temp sensor																													
P0720-P0793	P0720-P0793	Output speed sensor																													
P0715-P0717	P0715-P0717	Input speed sensor																													
P0724	P0724	Stop lamp switch																													
P0741-P0796	P0741-P0796	Trans solenoid (function)																													
P0748-P0798	P0748-P0799	Trans solenoid (range)																													
P0850	P0850	PNP switch																													X
P1010,P1020	P1010,P1020	VVTL																				X					X			
P1011,12(,21,22)	P1011,12(,21,22)	VVTL system1(,2)																				X					X			
P1126	P1126	Electronic magnet clutch																													
P1129	P1129	Electronic throttle system																													
P1430	P1430	HC adsorber ACT press sensor																													
P2004,6	P2004,6	Intake Manifold Runner Control																													
P2009,10	P2009,10	Intake Manifold Runner Control Circuit																													
P2014,16,17	P2014,16,17	Intake Manifold Runner Position Sensor																													
P2102,P2103	P2102,P2103	Throttle motor																													
P2120-P2138	P2120-P2138	Accel position sensor																													
P2196,P2198	P2196,P2198	A/F sensor (rationality)																				X			X	X					
P2226	P2226	BARO sensor																					X		X	X					
P2237,P2240	P2237,P2240	A/F sensor (open)																				X			X	X					
P2423,24	P2423,24	HC Adsorption Catalyst																													
P2430,2,3	P2430,2,3	AIR Pressure Sensor(Low/High)																													
P2431	P2431	AIR Pressure Sensor(Rationality)																													
P2440	P2440	AIR control valve stuck open																					X	X	X	X	X				
P2441	P2441	AIR control valve stuck close																					X	X	X	X	X				
P2444	P2444	AIP stuck On																					X	X	X	X	X				
P2445	P2445	AIP stuck Off																					X	X	X	X	X				
P2714-P2759	P2714-P2759	Trans solenoid(SLU-SLD)																													
P2A00,P2A03	P2A00,P2A03	A/F sensor (slow response)																				X			X	X					

C

A21571

Monitor detected malfunction

Fault code	Fault code	Component/ system	Monitor disablement (X - disabled)																												
			P0325,P0330	P0335	P0340,P0341	P0340-P0346	P0351-P0358	P0385	P0401	P0402	P0405	P0409	P0420,P0430	P0440-P0446	P0450,P0451	P0500	P0500	P0500	P0511	P0510	P0560	P0617	P0705	P0710	P0720-P0793	P0715-P0717	P0724	P0741-P0796
			P0325-P0333	P0335	P0340,P0341	P0340-P0346	P0351-P0358	P0385	P0401	P0402	P0405,P0406	P0409	P0420,P0430	P0440-P0446	P0450-P0453	P0500	P0500	P0500	P0511	P0510	P0560	P0617	P0705	P0710-P0713	P0720-P0793	P0715-P0717	P0724	P0741-P0796
			Knock sensor	CKP sensor	CMP sensor	VVT sensor1,2	Ignitor	CKP sensor 2	EGR system (closed)	EGR system (open)	EGR Lift sensor	EGR Lift sensor	Catalyst	EVAP system	EVAP press sensor	VSS(ECT2sensor)	VSS(ECT1sensor, non-ECT)	VSS(M/T)	IAC valve	Idle switch	System Voltage	Starter signal	Shift lever position switch	Trans fluid temp sensor	Output speed sensor	Input speed sensor	Stop lamp switch	Trans solenoid (function)*1
P0010,P0020	P0010,P0020	VVT VSV1,2																										X
P0011	P0011	VVT System1 - Advance							X	X			X	X					X									
P0012	P0012	VVT System1 - Retard							X	X			X	X					X									
P0016,P0018	P0016,P0018	VVT System - Misalignment																										
P0021	P0021	VVT System2 - Advance							X	X			X	X					X									
P0022	P0022	VVT System2 - Retard							X	X			X	X					X									
P0030,50	P0031,32,51,52	O2 Sensor Heater - Sensor1							X	X			X						X									X
P0135,P0155	P0031,32,51,52	A/F Sensor Heater - Sensor1							X	X			X						X									
P0036,56	P0037,38,57,58	O2 Sensor Heater - Sensor2											X															
P0043,44,63,64	P0043,44,63,64	O2 Sensor Heater - Sensor3																										
P0100,P0101	P0100-P0103	MAF sensor							X	X			X	X				X	X									X
P0105,P0106	P0105-P0108	MAP sensor							X	X			X	X				X	X									X
P0110	P0110-P0113	IAT sensor							X	X				X														X
P0115,P0116	P0115-P0118	ECT sensor							X	X		X	X	X				X	X									X
P0120,P0121	P0120-P0223,P2135	TP sensor							X	X			X	X			X		X									X
P0125	P0125	Insufficient ECT for Closed Loop							X	X		X	X	X				X	X									X
P0128	P0128	Thermostat																										
P0130-P0153	P0130-P0153	O2 Sensor - Sensor1							X	X			X						X									X
P0134,P0154	P0134,P0154	O2 Sensor, A/F Sensor(No Activity) - Sensor1							X	X			X						X									X
P0136,P0156	P0136,P0156	O2 Sensor - Sensor2											X															
P0142,P0162	P0142,P0162	O2 Sensor - Sensor3																										
P0171,P0172	P0171,P0172	Fuel system							X	X			X	X					X									X
P0300-P0308	P0300-P0308	Misfire											X	X					X									X
P0325,P0330	P0325-P0333	Knock sensor							X	X									X									X
P0335	P0335	CKP sensor							X	X			X	X					X									X
P0340, P0341	P0340, P0341	CMP sensor							X	X			X	X					X									X
P0340-P0346	P0340-P0346	VVT sensor1,2																										
P0351-P0358	P0351-P0358	Ignitor							X	X			X	X					X									X
P0385	P0385	CKP sensor 2							X	X			X	X					X									
P0401	P0401	EGR system (closed)											X															X
P0402	P0402	EGR system (open)											X	X					X									X
P0405,P0409	P0405-P0409	Lift sensor																										
P0420,P0430	P0420,P0430	Catalyst																										
P0442-P0456	P0442-P0456	EVAP system																	X									
P0450,P0451	P0450-P0453	EVAP press sensor												X														

C A22718 A21572

A22768

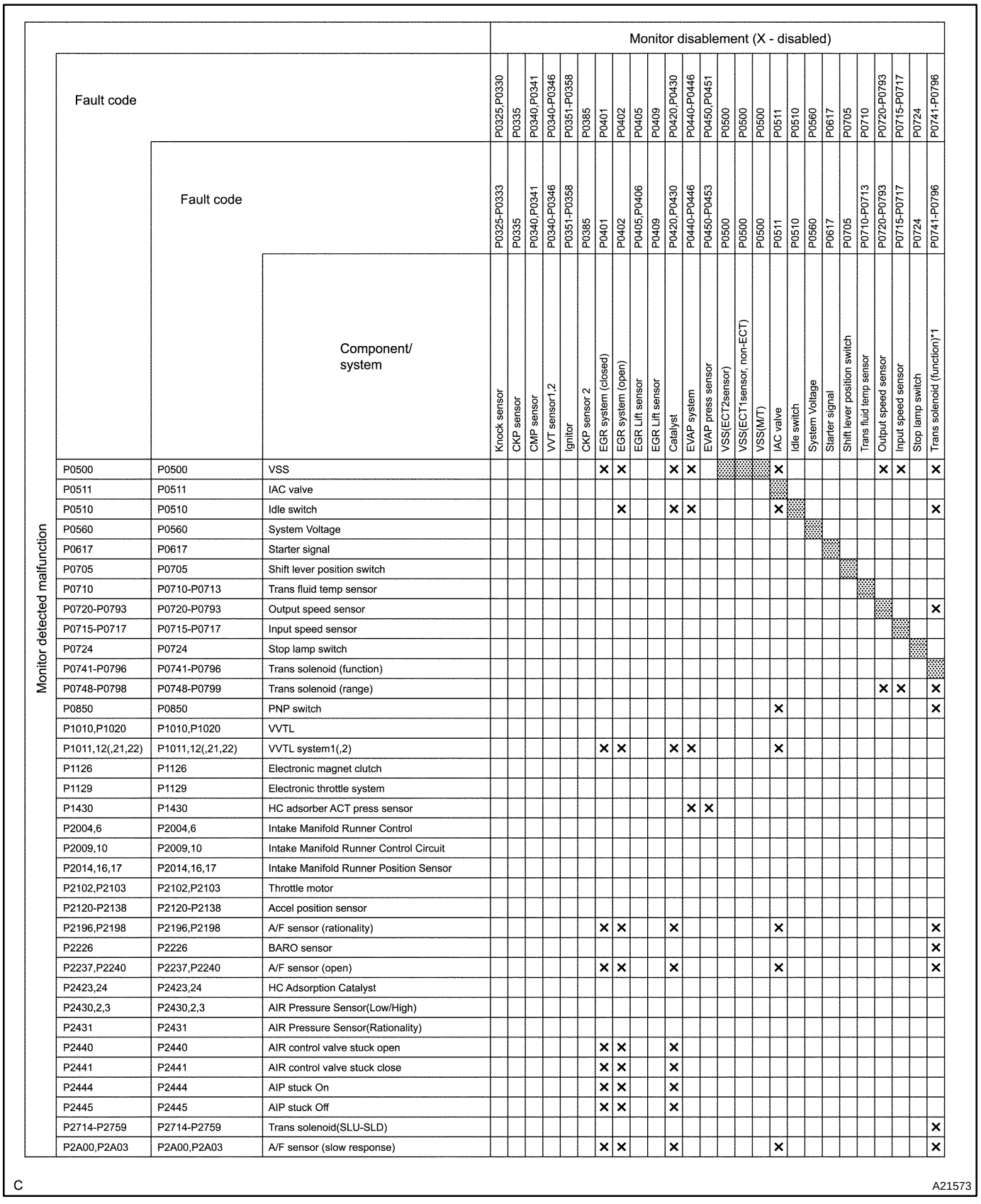
Monitor detected malfunction
Fault code
Fault code
Component/ system
Monitor disablement (X - disabled)
P0325,P0330
P0335
P0340,P0341
P0340-P0346
P0351-P0358
P0385
P0401
P0402
P0405
P0409
P0420,P0430
P0440-P0446
P0450,P0451
P0500
P0500
P0500
P0511
P0510
P0560
P0617
P0705
P0710
P0720-P0793
P0715-P0717
P0724
P0741-P0796
P0325-P0333
P0335
P0340,P0341
P0340-P0346
P0351-P0358
P0385
P0401
P0402
P0405,P0406
P0409
P0420,P0430
P0440-P0446
P0450-P0453
P0500
P0500
P0500
P0511
P0510
P0560
P0617
P0705
P0710-P0713
P0720-P0793
P0715-P0717
P0724
P0741-P0796
Knock sensor
CKP sensor
CMP sensor
VVT sensor1,2
Ignitor
CKP sensor 2
EGR system (closed)
EGR system (open)
EGR Lift sensor
EGR Lift sensor
Catalyst
EVAP system
EVAP press sensor
VSS(ECT2sensor)
VSS(ECT1sensor, non-ECT)
VSS(M/T)
IAC valve
Idle switch
System Voltage
Starter signal
Shift lever position switch
Trans fluid temp sensor
Output speed sensor
Input speed sensor
Stop lamp switch
Trans solenoid (function)*1
P0500 P0500 VSS
P0511 P0511 IAC valve
P0510 P0510 Idle switch
P0560 P0560 System Voltage
P0617 P0617 Starter signal
P0705 P0705 Shift lever position switch
P0710 P0710-P0713 Trans fluid temp sensor
P0720-P0793 P0720-P0793 Output speed sensor
P0715-P0717 P0715-P0717 Input speed sensor
P0724 P0724 Stop lamp switch
P0741-P0796 P0741-P0796 Trans solenoid (function)
P0748-P0798 P0748-P0799 Trans solenoid (range)
P0850 P0850 PNP switch
P1010,P1020 P1010,P1020 VVTL
P1011,12(,21,22) P1011,12(,21,22) VVTL system1(,2)
P1126 P1126 Electronic magnet clutch
P1129 P1129 Electronic throttle system
P1430 P1430 HC adsorber ACT press sensor
P2004,6 P2004,6 Intake Manifold Runner Control
P2009,10 P2009,10 Intake Manifold Runner Control Circuit
P2014,16,17 P2014,16,17 Intake Manifold Runner Position Sensor
P2102,P2103 P2102,P2103 Throttle motor
P2120-P2138 P2120-P2138 Accel position sensor
P2196,P2198 P2196,P2198 A/F sensor (rationality)
P2226 P2226 BARO sensor
P2237,P2240 P2237,P2240 A/F sensor (open)
P2423,24 P2423,24 HC Adsorption Catalyst
P2430,2,3 P2430,2,3 AIR Pressure Sensor(Low/High)
P2431 P2431 AIR Pressure Sensor(Rationality)
P2440 P2440 AIR control valve stuck open
P2441 P2441 AIR control valve stuck close
P2444 P2444 AIP stuck On
P2445 P2445 AIP stuck Off
P2714-P2759 P2714-P2759 Trans solenoid(SLU-SLD)
P2A00,P2A03 P2A00,P2A03 A/F sensor (slow response)
C
A21573

Monitor detected malfunction	Fault code	Fault code	Component/ system	Monitor disablement (X - disabled)																										
				P0741-P0796	P0748-P0798	P0850	P1010,P1020	P1011,12(,21,22)	P1126	P1129	P1430	P2004,P2006	P2009,P2010	P2014,16,17	P2102,P2103	P2120-P2138	P2196,P2198	P2226	P2237,P2240	P2423,24	P2430,2,3	P2431	P2440	P2441	P2444	P2445	P2714-P2759	P2A00,P2A03
				P0741-P0796	P0748-P0999	P0850	P1010,P1020	P1011,12(,21,22)	P1126	P1129	P1430	P2004,6	P2009,10	P2014,16,17	P2102,P2103	P2120-P2138	P2196,P2198	P2226	P2237,P2240	P2423,24	P2430,2,3	P2431	P2440	P2441	P2444	P2445	P2714-P2759	P2A00,P2A03
			Trans solenoid (function)*2																											
			Trans solenoid (range)																											
			PNP switch																											
			VVTL																											
			VVTL system1(,2)																											
			Electronic magnet clutch																											
			Electronic throttle system																											
			HC adsorber ACT press sensor																											
			Intake Manifold Runner Control																											
			Intake Manifold Runner Control Circuit																											
			Intake Manifold Runner Position Sensor																											
			Throttle motor																											
			Accel position sensor																											
			A/F Sensor(Rationality) - Sensor1																											
			BARO sensor																											
			A/F Sensor(Open) - Sensor1																											
			HC Adsorption Catalyst																											
			AIR Pressure Sensor(Low/High)																											
			AIR Pressure Sensor(Rationality)																											
			AIR control valve stuck open																											
			AIR control valve stuck close																											
			AIP stuck On																											
			AIP stuck Off																											
			Trans solenoid(SLU-SLD)																											
			A/F Sensor (Slow response) - Sensor1																											
	P0010,P0020	P0010,P0020	VVT VSV1,2																				X	X	X	X				
	P0011	P0011	VVT System1 - Advance																				X	X	X	X				
	P0012	P0012	VVT System1 - Retard																				X	X	X	X				
	P0016,P0018	P0016,P0018	VVT System - Misalignment																				X	X	X	X				
	P0021	P0021	VVT System2 - Advance																				X	X	X	X				
	P0022	P0022	VVT System2 - Retard																				X	X	X	X				
	P0030,50	P0031,32,51,52	O2 Sensor Heater - Sensor1																	X			X	X	X	X				
	P0135,P0155	P0031,32,51,52	A/F Sensor Heater - Sensor1														X		X	X			X	X	X	X			X	
	P0036,56	P0037,38,57,58	O2 Sensor Heater - Sensor2														X			X										
	P0043,44,63,64	P0043,44,63,64	O2 Sensor Heater - Sensor3																	X										
	P0100,P0101	P0100-P0103	MAF sensor				X	X									X		X	X			X	X	X	X			X	
	P0105,P0106	P0105-P0108	MAP sensor				X	X									X		X	X			X	X	X	X			X	
	P0110	P0110-P0113	IAT sensor									X					X		X				X	X	X	X			X	
	P0115,P0116	P0115-P0118	ECT sensor	X			X	X				X					X		X	X			X	X	X	X			X	
	P0120,P0121	P0120-P0223,P2135	TP sensor														X		X	X			X	X	X	X			X	
	P0125	P0125	Insufficient ECT for Closed Loop	X			X										X		X	X			X	X	X	X			X	
	P0128	P0128	Thermostat																											
	P0130-P0153	P0130-P0153	O2 Sensor - Sensor1																	X			X	X	X	X				
	P0134,P0154	P0134,P0154	O2 Sensor, A/F Sensor(No Activity) - Sensor1														X		X	X			X	X	X	X			X	
	P0136,P0156	P0136,P0156	O2 Sensor - Sensor2														X			X										
	P0142,P0162	P0142,P0162	O2 Sensor - Sensor3																	X										
	P0171,P0172	P0171,P0172	Fuel system														X		X	X			X	X	X	X			X	
	P0300-P0308	P0300-P0308	Misfire														X		X	X			X	X	X	X			X	
	P0325,P0330	P0325-P0333	Knock sensor																				X	X	X	X				
	P0335	P0335	CKP sensor				X	X									X		X	X			X	X	X	X			X	
	P0340, P0341	P0340, P0341	CMP sensor				X	X									X		X	X			X	X	X	X			X	
	P0340-P0346	P0340-P0346	VVT sensor1,2																				X	X	X	X				
	P0351-P0358	P0351-P0358	Ignitor																	X			X	X	X	X				
	P0385	P0385	CKP sensor 2				X	X									X		X	X			X	X	X	X			X	
	P0401	P0401	EGR system (closed)																	X										
	P0402	P0402	EGR system (open)														X		X	X			X	X	X	X			X	
	P0405,P0409	P0405-P0409	Lift sensor																											
	P0420,P0430	P0420,P0430	Catalyst																											
	P0442-P0456	P0442-P0456	EVAP system														X		X				X	X	X	X			X	
	P0450,P0451	P0450-P0453	EVAP press sensor																				X	X	X	X				

C

A21575

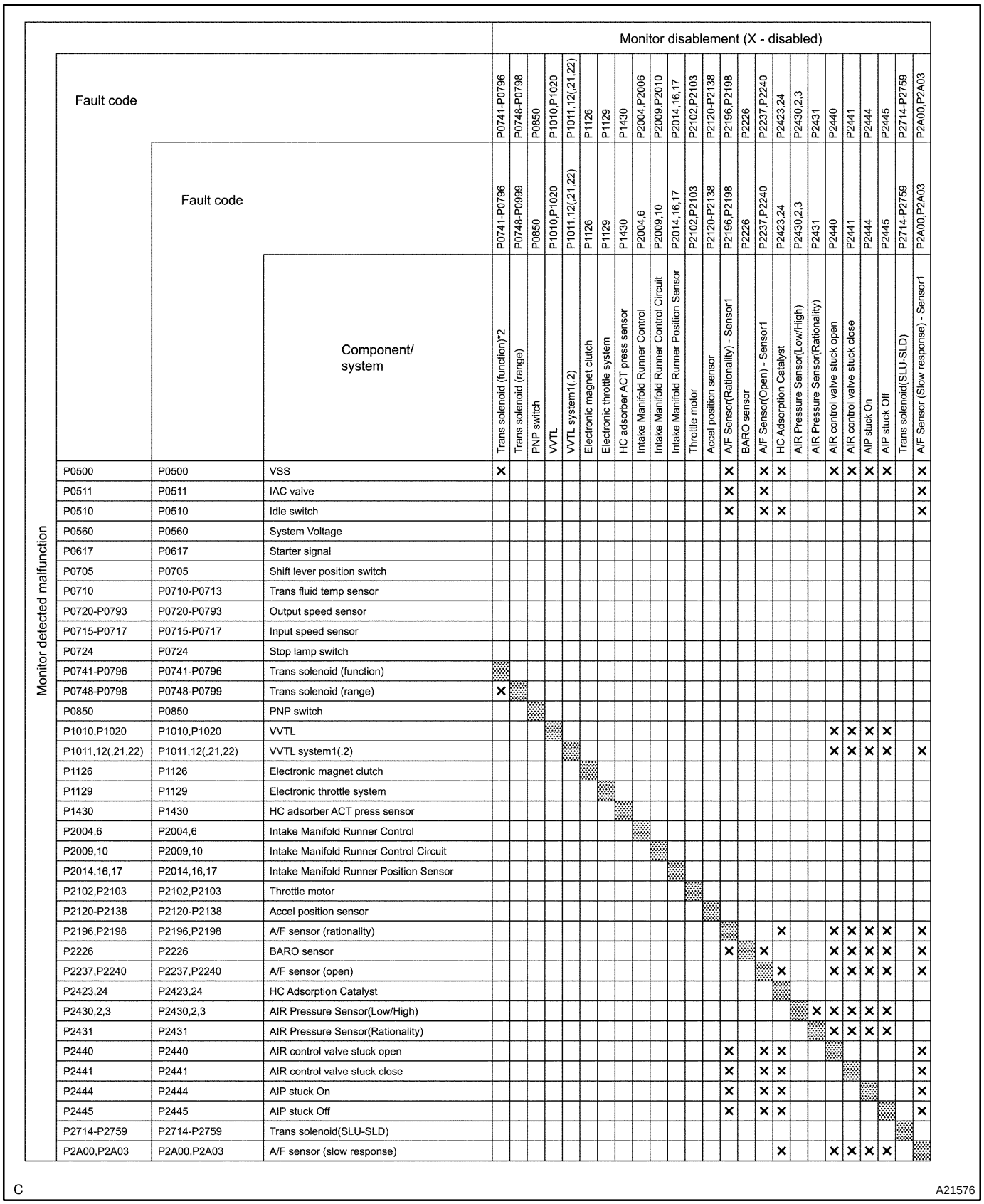

Monitor detected malfunction	Fault code	Fault code	Component/ system	Monitor disablement (X - disabled)																										
				P0741-P0796	P0748-P0798	P0850	P1010,P1020	P1011,12(,21,22)	P1126	P1129	P1430	P2004,P2006	P2009,P2010	P2014,16,17	P2102,P2103	P2120-P2138	P2196,P2198	P2226	P2237,P2240	P2423,24	P2430,2,3	P2431	P2440	P2441	P2444	P2445	P2714-P2759	P2A00,P2A03
		P0741-P0796	Trans solenoid (function)*2																											
		P0748-P0999	Trans solenoid (range)																											
		P0850	PNP switch																											
		P1010,P1020	VVTL																											
		P1011,12(,21,22)	VVTL system1(,2)																											
		P1126	Electronic magnet clutch																											
		P1129	Electronic throttle system																											
		P1430	HC adsorber ACT press sensor																											
		P2004,6	Intake Manifold Runner Control																											
		P2009,10	Intake Manifold Runner Control Circuit																											
		P2014,16,17	Intake Manifold Runner Position Sensor																											
		P2102,P2103	Throttle motor																											
		P2120-P2138	Accel position sensor																											
		P2196,P2198	A/F Sensor(Rationality) - Sensor1																											
		P2226	BARO sensor																											
		P2237,P2240	A/F Sensor(Open) - Sensor1																											
		P2423,24	HC Adsorption Catalyst																											
		P2430,2,3	AIR Pressure Sensor(Low/High)																											
		P2431	AIR Pressure Sensor(Rationality)																											
		P2440	AIR control valve stuck open																											
		P2441	AIR control valve stuck close																											
		P2444	AIP stuck On																											
		P2445	AIP stuck Off																											
		P2714-P2759	Trans solenoid(SLU-SLD)																											
		P2A00,P2A03	A/F Sensor (Slow response) - Sensor1																											
	P0500	P0500	VSS	X												X		X	X			X	X	X	X			X
	P0511	P0511	IAC valve													X		X											X
	P0510	P0510	Idle switch													X		X	X										X
	P0560	P0560	System Voltage																											
	P0617	P0617	Starter signal																											
	P0705	P0705	Shift lever position switch																											
	P0710	P0710-P0713	Trans fluid temp sensor																											
	P0720-P0793	P0720-P0793	Output speed sensor																											
	P0715-P0717	P0715-P0717	Input speed sensor																											
	P0724	P0724	Stop lamp switch																											
	P0741-P0796	P0741-P0796	Trans solenoid (function)																											
	P0748-P0798	P0748-P0799	Trans solenoid (range)	X																										
	P0850	P0850	PNP switch																											
	P1010,P1020	P1010,P1020	VVTL																				X	X	X	X			
	P1011,12(,21,22)	P1011,12(,21,22)	VVTL system1(,2)																				X	X	X	X			X
	P1126	P1126	Electronic magnet clutch																											
	P1129	P1129	Electronic throttle system																											
	P1430	P1430	HC adsorber ACT press sensor																											
	P2004,6	P2004,6	Intake Manifold Runner Control																											
	P2009,10	P2009,10	Intake Manifold Runner Control Circuit																											
	P2014,16,17	P2014,16,17	Intake Manifold Runner Position Sensor																											
	P2102,P2103	P2102,P2103	Throttle motor																											
	P2120-P2138	P2120-P2138	Accel position sensor																											
	P2196,P2198	P2196,P2198	A/F sensor (rationality)																	X			X	X	X	X			X
	P2226	P2226	BARO sensor														X		X				X	X	X	X			X
	P2237,P2240	P2237,P2240	A/F sensor (open)																	X			X	X	X	X			X
	P2423,24	P2423,24	HC Adsorption Catalyst																											
	P2430,2,3	P2430,2,3	AIR Pressure Sensor(Low/High)																			X	X	X	X	X			
	P2431	P2431	AIR Pressure Sensor(Rationality)																				X	X	X	X			
	P2440	P2440	AIR control valve stuck open														X		X	X									X
	P2441	P2441	AIR control valve stuck close														X		X	X									X
	P2444	P2444	AIP stuck On														X		X	X									X
	P2445	P2445	AIP stuck Off														X		X	X									X
	P2714-P2759	P2714-P2759	Trans solenoid(SLU-SLD)																											
	P2A00,P2A03	P2A00,P2A03	A/F sensor (slow response)																	X			X	X	X	X			

C

A21576

DIDUZ−01

MONITOR DRIVE PATTERN

1. MONITOR DRIVE PATTERN FOR ECT TEST

(a) Perform this drive pattern as one method to simulate the detection conditions of the ECT malfunctions. (The DTCs may not be detected due to the actual driving conditions. And some codes may not be detected through this drive pattern.)

HINT:

Preparation for driving

- Warm up the engine sufficiently. (Engine coolant temperature is 60 °C (140 °F) or higher).
- Drive the vehicle when the atmospheric temperature is −10 °C (14 °F) or higher. (Malfunction is not detected when the atmospheric temperature is −10 °C (14 °F) or less).

Notice in driving

- Drive the vehicle through all gears.
  Stop → 1st → 2nd → 3rd → 4th → 5th → 5th (lock−up ON).
- Repeat the above driving pattern three times or more.

NOTICE:

- **The monitor status can be checked using the OBD II scan tool. When using the hand−held tester, monitor status can be found in the ”ENHANCED OBD II / DATA LIST” or under ”CARB OBD II”.**
- **In the event that the drive pattern must be interrupted (possibly due to traffic conditions or other factors), the drive pattern can be resumed and, in most cases, the monitor can be completed.**
- **Perform this drive pattern on a level road as much as possible and strictly observe the posted speed limits and traffic laws while driving.**

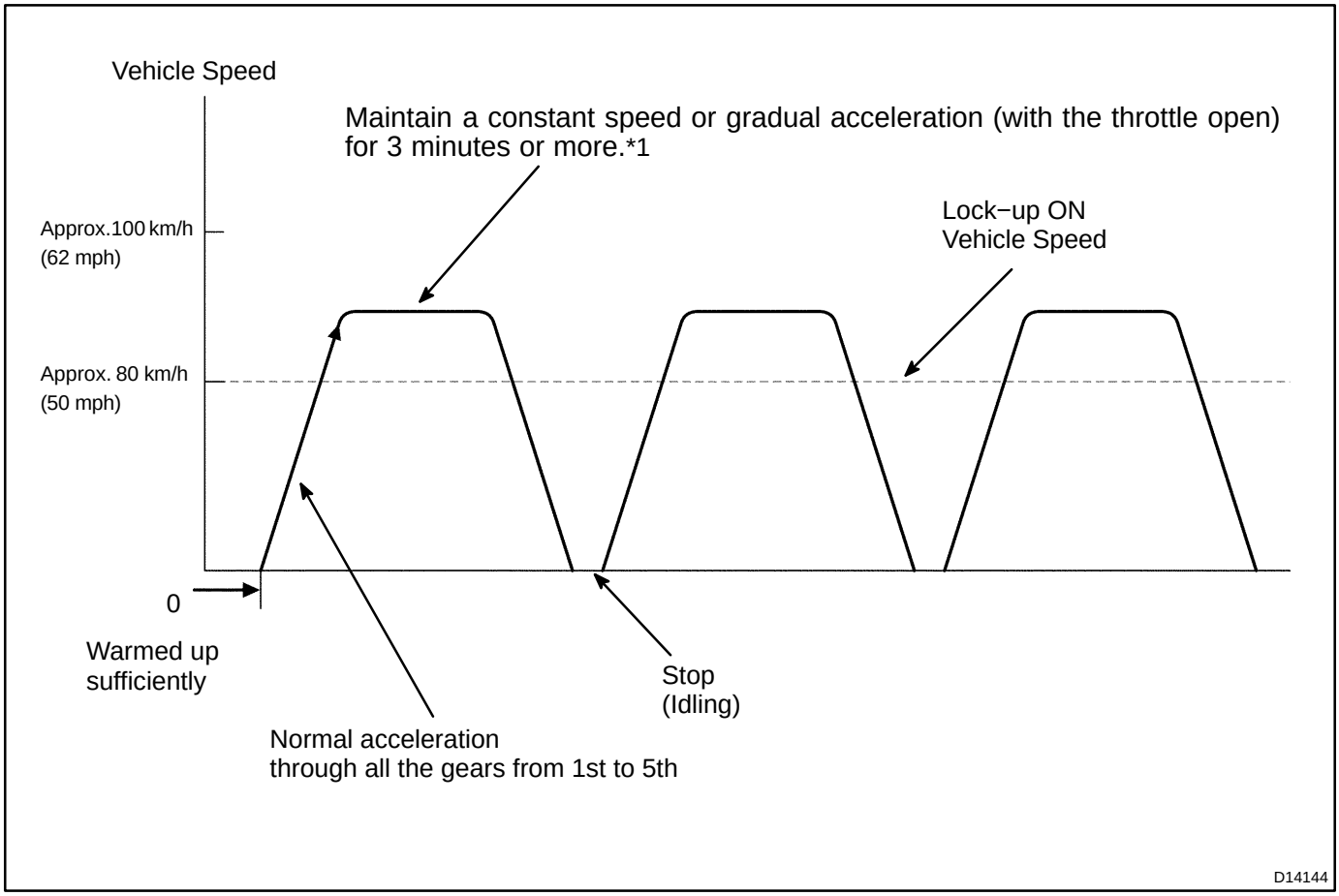

HINT:

*1: Drive at such a speed in the uppermost gear, to engage lock−up. The vehicle can be driven at a speed lower than that in the above diagram under the lock−up condition.

NOTICE:

It is necessary to drive the vehicle for approximately 30 minutes to detect DTC P0711 (ATF temperature sensor malfunction).

DIDUU−01

MECHANICAL SYSTEM TESTS

1. PERFORM MECHANICAL SYSTEM TESTS

(a) Measure the stall speed.

The object of this test is to check the overall performance of the transmission and engine by measuring the stall speeds in the D positions.

NOTICE:

- **Perform the test at the normal operating ATF (Automatic Transmission Fluid) temperature 50 to 80°C (122 to 176°F).**
- **Do not continuously run this test for longer than 5 seconds.**
- **To ensure safety, do this test in a wide, clear level area which provides good traction.**
- **The stall test should always be carried out in pairs. One technician should observe the conditions of wheels or wheel stoppers outside the vehicle while the other is doing the test.**

(1) Chock all 4 wheels.
(2) Connect a hand−held tester to DLC3.
(3) Fully apply the parking brake.
(4) Using your left foot, keep the brake pedal firmly depressed.
(5) Start the engine.
(6) Shift into the D position. Press all the way down on the accelerator pedal with your right foot.
(7) Quickly read the stall speed at this time.

Stall speed: 2,400 ± 150 rpm

Evaluation:

Problem	Possible cause
(a) Stall engine speed is low in D position	• Engine power output may be insufficient • Stator one−way clutch is not operating properly HINT: If the value is less than the specified value by 600 rpm or more, the torque converter could be faulty.
(b) Stall engine speed is high in D position	• Line pressure is too low • Clutch No.1 (C_1) slipping • One−way clutch No.3 (F_3) is not operating properly • Improper fluid level

(b) Measure the time lag.

When the shift lever is shifted while the engine is idling, there will be a certain time lapse or lag before the shock can be felt. This is used for checking the condition of the direct clutch, forward clutch, and 1st and reverse brake.

NOTICE:

- **Perform the test at the normal operating ATF (Automatic Transmission Fluid) temperature: 50 to 80°C (122 to 176°F).**
- **Be sure to allow for a 1 minute interval between tests.**
- **Perform the test three times, and measure the time lags. Calculate the average value of the three time lags.**

(1) Connect a hand−held tester to DLC3.

(2) Fully apply the parking brake.

(3) Start and warm up the engine and check idle speed.

Idle speed: approx. 700 rpm (In N position and A/C OFF)

(4) Shift the lever from the N to D position. Using a stop watch, measure the time from when the lever is shifted until the shock is felt.

Time lag:

N → D Less than 1.2 seconds

(5) In the same manner, measure the time lag for N → R.

Time lag:

N → R Less than 1.5 seconds

Evaluation (If N → D time or N → R time lag is longer than the specified):

Problem	Possible cause
N → D time lag is longer than specified	• Line pressure is too low • Clutch No.1 (C_1) worn • One−way clutch No.3 (F_3) is not operating properly
N → R time lag is longer than specified	• Line pressure is too low • Clutch No.3 (C_3) worn • Brake No.4 (B_4) worn • One−way clutch No.1 (F_1) is not operating properly

DIDUW−01

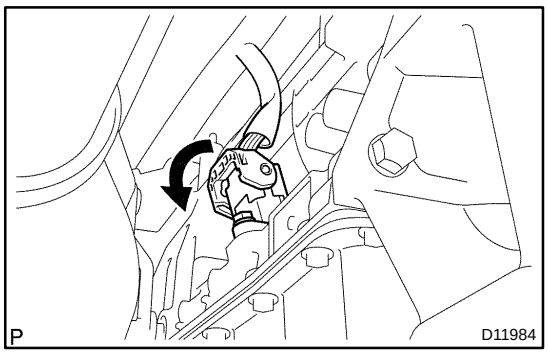

MANUAL SHIFTING TEST

1. MANUAL SHIFTING TEST

HINT:

- With this test, it can be determined whether the trouble occurs in the electrical circuit or is a mechanical problem in the transmission.
- If any abnormalities are found in the following test, the problem is in the transmission itself.

(a) Disconnect the connector of the transmission wire.

(b) Drive with the transmission wire disconnected.
Shifting the shift lever to the L, 2, 3, 4 and D position to check whether the shifting condition changes the table below.

Shift Position	Shifting Condition
L ⇔ 2	No Shift (Not Change)
2 ⇔ 3	Down Shift ⇔ Up Shift
3 ⇔ 4	Down Shift ⇔ Up Shift
4 ⇔ D	No Shift (Not Change)

HINT:

When driving with the transmission wire disconnected, the gear position will be as follows:

- When the shift lever is in the L or the 2 position, the gear is held in the 1st position.
- When the shift lever is in the 3rd position, the gear is held in the 3rd position.
- When the shift lever is in the 4 or the D position, the gear is held in the 4th position.
- When the shift lever is in the R or the P position, the gear is also in the R or the P position respectively.

(c) Connect the connector of the transmission wire.

(d) Clear the DTC (See page DI−983).

AUTOMATIC TRANSMISSION (A750E for 1GR−FE)

DIDUK−01

PRECAUTION

NOTICE:

Perform the RESET MEMORY (AT initialization) when replacing the automatic transmission assy, engine assy or ECM (See page DI−961).

HINT:

RESET MEMORY cannot be completed by only disconnecting the battery terminal.

DIDV0−01

PROBLEM SYMPTOMS TABLE

HINT:

If a normal code is displayed during the diagnostic trouble code check although the trouble still occurs, check the electrical circuits for each symptom in the order given in the charts on the following pages and proceed to the page given for troubleshooting.

The Matrix Chart is divided into 3 chapters.

1. Chapter 1: Electronic Circuit Matrix Chart

- Refer to the table below when the trouble cause is considered to be electrical.
- If the instruction ”Proceed to next circuit inspection shown on matrix chart” is given in the flow chart of each circuit, proceed to the circuit with the next highest number in the table to continue the check.
- If the trouble still occurs even though there are no abnormalities in any of the other circuits, check and replace the ECM.

HINT:

*1: When the circuit on which mark *1 is attached is defective, DTC could be output (see page DI−991).

Symptom	Suspect Area	See page
No up−shift (A particular gear, from 1st to 4th gear, is not up−shifted)	1. Shift solenoid valve (S1) circuit *1 2. Shift solenoid valve (S2) circuit *1 3. ECM	DI−1058 DI−1063 IN−30
No up−shift (4th → 5th)	1. O/D main switch circuit 2. Engine coolant temp. sensor circuit *1 3. Speed sensor NT circuit *1 4. Shift solenoid valve (SL1) circuit *1 5. Shift solenoid valve (SL2) circuit *1 6. Shift solenoid valve (SR) circuit *1 7. ECM	DI−1102 DI−57 DI−1008 DI−1020 DI−1048 DI−1068 IN−30
No up−shift (3rd → 4th)	1. Engine coolant temp. sensor circuit *1 2. Shift solenoid valve (S2) circuit *1 3. ECM	DI−57 DI−1063 IN−30
No up−shift (1st → 2nd)	1. Shift position L switch circuit 2. Shift solenoid valve (S2) circuit *1 3. ECM	DI−1105 DI−1063 IN−30
No down−shift (5th → 4th)	1. O/D main switch circuit 2. Shift solenoid valve (SL1) circuit *1 3. Shift solenoid valve (SL2) circuit *1 4. Shift solenoid valve (SR) circuit *1 5. ECM	DI−1102 DI−1020 DI−1048 DI−1068 IN−30
No down−shift (2nd → 1st)	1. Shift position L switch circuit 2. Shift solenoid valve (S2) circuit *1 3. ECM	DI−1105 DI−1063 IN−30
No down−shift (A particular gear, from 1st to 4th gear, is not down−shifted)	1. Shift solenoid valve (S1) circuit *1 2. Shift solenoid valve (S2) circuit *1 3. ECM	DI−1058 DI−1063 IN−30
No lock−up	1. ATF temperature sensor circuit *1 2. Stop light switch circuit *1 3. Speed sensor NT circuit *1 4. Shift solenoid valve (SLU) circuit *1 5. Engine coolant temp. sensor circuit *1 6. ECM	DI−999 DI−1017 DI−1008 DI−1097 DI−57 IN−30
No lock−up off	1. Shift solenoid valve (SLU) circuit *1 2. ECM	DI−1097 IN−30

Shift point too high or too low	1. Shift solenoid valve (SLT) circuit *1 2. Speed sensor NT circuit *1 3. Speed sensor SP2 circuit *1 4. Throttle position sensor circuit *1 5. ATF temperature sensor circuit *1 7. ECM	DI−1079 DI−1008 DI−1013 DI−57 DI−999 IN−30
Up−shift to 5th from 4th while shift lever is in 4 position	1. O/D main switch circuit 2. ECM	DI−1102 IN−30
Up−shift to 5th from 4th while engine is cold	1. Engine coolant temp. sensor circuit *1 2. ECM	DI−57 IN−30
Up−shift to 4th from 3rd while shift lever is in 3 position	1. Park/neutral position switch circuit *1 2. ECM	DI−993 IN−30
Up−shift to 3rd from 2nd while shift lever is in 2 position	1. Park/neutral position switch circuit *1 2. ECM	DI−993 IN−30
Up−shift to 2nd from 1st while shift lever is in L position	1. Shift position L switch circuit 2. ECM	DI−1105 IN−30
Harsh engagement (N → D)	1. Speed sensor NT circuit *1 2. Shift solenoid valve (SL1) circuit *1 3. Shift solenoid valve (SLT) circuit *1 4. ECM	DI−1008 DI−1020 DI−1079 IN−30
Harsh engagement (Lock−up)	1. Speed sensor NT circuit *1 2. Speed sensor SP2 circuit *1 3. Shift solenoid valve (SLU) circuit *1 4. ECM	DI−1008 DI−1013 DI−1097 IN−30
Harsh engagement (Any driving position)	ECM	IN−30
Poor acceleration	1. ATF temperature sensor No.2 circuit *1 2. Engine coolant temp. sensor circuit *1 3. Shift solenoid valve (SLT) circuit *1 4. ECM	DI−1083 DI−57 DI−1079 IN−30
No engine braking	ECM	IN−30
No kick−down	ECM	IN−30
Engine stalls when starting off or stopping	1. Shift solenoid valve (SLU) circuit *1 2. ECM	DI−1079 IN−30
AT Oil Temp. warning light remains on	1. ATF temperature sensor No.2 circuit *1 2. Engine coolant temp. sensor circuit *1 3. ECM	DI−1083 DI−57 IN−30
Lock−up at 3rd gear		
Shift point too high		
Malfunction in shifting	1. Park/neutral position switch circuit *1 2. ECM	DI−993 IN−30

Chapter 2: On−Vehicle Repair
(★: A750E, A750F AUTOMATIC TRANSMISSION Repair Manual Pub. No. RM999U)

Symptom	Suspect Area	See page
Vehicle does not move with shift lever in any forward position and reverse position	1. Transmission control cable 2. Manual valve 3. Parking lock pawl 4. Off−vehicle repair matrix chart	DI−952 ★ ★ −
Vehicle does not move with shift lever in R position	1. Valve body assy 2. Off−vehicle repair matrix chart	AT−12 −
No up−shift (1st → 2nd)	1. Valve body assy 2. Off−vehicle repair matrix chart	AT−12 −
No up−shift (2nd → 3rd)	1. Valve body assy 2. Off−vehicle repair matrix chart	AT−12 −
No up−shift (3rd → 4th)	1. Valve body assy 2. Off−vehicle repair matrix chart	AT−12 −
No up−shift (4th → 5th)	1. Valve body assy 2. Off−vehicle repair matrix chart	AT−12 −
No down−shift (5th → 4th)	1. Valve body assy 2. Off−vehicle repair matrix chart	AT−12 −
No down−shift (4th → 3rd)	1. Valve body assy 2. Off−vehicle repair matrix chart	AT−12 −
No down−shift (3rd → 2nd)	1. Valve body assy 2. Off−vehicle repair matrix chart	AT−12 −
No down−shift (2nd → 1st)	1. Valve body assy 2. Off−vehicle repair matrix chart	AT−12 −
No lock−up or No lock−up off	1. Shift solenoid valve (SLU) 2. Valve body assy 3. Off−vehicle repair matrix chart	DI−1089 AT−12 −
Harsh engagement (N → D)	1. Shift solenoid valve (SL1) 2. Valve body assy 3. C_1 accumulator 4. Off−vehicle repair matrix chart	DI−1020 AT−12 ★ −
Harsh engagement (Lock−up)	1. Shift solenoid valve (SLU) 2. Valve body assy 3. Off−vehicle repair matrix chart	DI−1089 AT−12 −
Harsh engagement (N → R)	1. Shift solenoid valve (SLT) 2. Shift solenoid valve (SLU) 3. Valve body assy 4. C_3 accumulator 5. Off−vehicle repair matrix chart	DI−1073 DI−1089 AT−12 ★ −
Harsh engagement (1st →2nd → 3rd → 4th → 5th)	1. Shift solenoid valve (SLT) 2. Shift solenoid valve (SL1) 3. Valve body assy	DI−1073 DI−1020 AT−12
Harsh engagement (1st → 2nd)	1. Valve body assy 2. B_3 accumulator 3. Off−vehicle repair matrix chart	AT−12 ★ −
Harsh engagement (2nd → 3rd)	1. Valve body assy 2. C_3 accumulator 3. Off−vehicle repair matrix chart	AT−12 ★ −
Harsh engagement (3rd → 4th)	1. Valve body assy 2. C_2 accumulator 3. Off−vehicle repair matrix chart	AT−12 ★ −

Harsh engagement (4th → 5th)	1. Shift solenoid valve (SL1) 2. Shift solenoid valve (SL2) 3. Valve body assy 4. Off−vehicle repair matrix chart	DI−1020 DI−1042 AT−12 –
Harsh engagement (5th → 4th)	1. Shift solenoid valve (SL1) 2. Shift solenoid valve (SL2) 3. Valve body assy 4. Off−vehicle repair matrix chart	DI−1020 DI−1042 AT−12 –
Slip or shudder (Forward and reverse)	1. Transmission control cable 2. Valve body assy 3. Oil strainer 4. Off−vehicle repair matrix chart	DI−952 AT−12 AT−12 –
No engine braking (1st: L position)	1. Valve body assy 2. Off−vehicle repair matrix chart	AT−12 –
No engine braking (2nd: 2 position)	1. Valve body assy 2. Off−vehicle repair matrix chart	AT−12 –
No kick−down	Valve body assy	AT−12
Shift point too high or too low	1. Shift solenoid valve (SLT) 2. Shift solenoid valve (SL1) 3. Valve body assy	DI−1073 DI−1020 AT−12
Poor acceleration	1. Shift solenoid valve (SLT) 2. Valve body assy	DI−1073 AT−12
Engine stalls when starting off or stopping	1. Shift solenoid valve (SLU) 2. Valve body assy	DI−1089 AT−12

Chapter 3: Off−Vehicle Repair
(★: A750E, A750F AUTOMATIC TRANSMISSION Repair Manual Pub. No. RM999U)

Symptom	Suspect Area	See page
Vehicle does not move with shift lever in any forward position and reverse position	1. Rear planetary gear unit 2. Torque converter clutch	★ AT−39
Vehicle does not move with shift lever in R position	1. Brake No. 4 (B_4) 2. Clutch No. 3 (C_3) 3. One−way clutch No.4 (F_1)	★ ★ ★
No up−shift (1st → 2nd)	1. Brake No. 3 (B_3) 2. One−way clutch No.1 (F_1) 3. One−way clutch No. 2 (F_2)	★ ★ ★
No up−shift (2nd → 3rd)	Clutch No. 3 (C_3)	★
No up−shift (3rd → 4th)	Clutch No. 2 (C_2)	★
No up−shift (4th → 5th)	1. Brake No. 1 (B_1) 2. Clutch No. 1 (C_1)	★ ★
No lock−up or No lock−up off	Torque converter clutch	AT−39
Harsh engagement (N → D)	1. Clutch No. 1 (C_1) 2. One−way clutch No.3 (F_3)	★ ★
Harsh engagement (N → R)	1. Clutch No. 3 (C_3) 2. Brake No. 4 (B_4) 3. One−way clutch No.1 (F_1)	★ ★ ★
Harsh engagement (1 → 2)	1. Brake No. 3 (B_3) 2. One−way clutch No.1 (F_1) 3. One−way clutch No. 2 (F_2)	★ ★ ★
Harsh engagement (2 → 3)	Clutch No. 3 (C_3)	★
Harsh engagement (3 → 4)	Clutch No. 2 (C_2)	★
Harsh engagement (4 → 5th)	1. Brake No. 1 (B_1) 2. Clutch No. 1 (C_1)	★ ★
Harsh engagement (Lock−up)	Torque converter clutch	AT−39
Slip or shudder (Forward and reverse: After warm−up)	1. One−way clutch No.1 (F_1) 2. Clutch No. 3 (C_3) 3. Torque converter clutch clutch	★ ★ ★
Slip or shudder (Particular position: Just after engine starts)	Torque converter clutch	AT−39
Slip or shudder (R position)	1. Brake No. 4 (B_4) 2. One−way clutch No.1 (F_1) 3. Clutch No. 3 (C_3)	★ ★ ★
Slip or shudder (1st)	1. Clutch No. 1 (C_1) 2. One−way clutch No.3 (F_3)	★ ★
Slip or shudder (2nd)	1. Clutch No. 1 (C_1) 2. Brake No. 3 (B_3) 3. One−way clutch No.1 (F_1) 4. One−way clutch No.2 (F_2)	★ ★ ★ ★
Slip or shudder (3rd)	1. Clutch No. 1 (C_1) 2. Clutch No. 3 (C_3) 3. One−way clutch No.1 (F_1)	★ ★ ★
Slip or shudder (4th)	1. Clutch No. 1 (C_1) 2. Clutch No. 2 (C_2)	★ ★
Slip or shudder (5th)	1. Clutch No. 2 (C_2) 2. Clutch No. 3 (C_3) 3. Brake No. 1 (B_1)	★ ★ ★
No engine braking (1st – 4th: D position)	Clutch No. 1 (C_1)	★

No engine braking (1st: L position)	Brake No. 4 (B_4)	★
No engine braking (2nd: 2 position)	Brake No. 2 (B_2)	★
No engine braking (3rd: 3 position)	Brake No. 1 (B_1)	★
Poor acceleration (All positions)	Torque converter clutch	AT−39
Poor acceleration (5th)	1. Clutch No. 1 (C_1) 2. Clutch No. 3 (C_3) 3. Brake No. 1 (B_1) 4. Front planetary gear unit	★ ★ ★ ★
Engine stalls when starting off or stopping	Torque converter clutch	AT−39

DIDUT−01

ROAD TEST

1. PROBLEM SYMPTOM CONFIRMATION

Based on the result of the customer problem analysis, try to reproduce the symptoms. If the problem is that the transaxle does not shift up, shift down, or the shift point is too high or too low, conduct the following road test referring to the automatic shift schedule and simulate the problem symptoms.

2. ROAD TEST

NOTICE:

Perform the test at the normal operating ATF (Automatic Transmission Fluid) temperature: 50 to 80°C (122 to 176°F).

(a) D position test:

Shift into the D position and fully depress the accelerator pedal and check the following points.

(1) Check up−shift operation.

Check that 1 → 2, 2 → 3, 3 → 4 and 4 → 5th up−shifts take place, and that the shift points conform to the automatic shift schedule (See page SS−50).

HINT:

5th Gear Up−shift Prohibition Control

- Engine coolant temperature is 55 °C (131 °F) or less and vehicle speed is at 51 km/h (32 mph) or less.

4th Gear Up−shift Prohibition Control

- Engine coolant temperature is 47 °C (117 °F) or less and vehicle speed is at 49 km/h (30 mph) or less.

3rd Gear Up−shift Prohibition Control

- Engine coolant temperature is 40 °C (104 °F) or less and vehicle speed is at 45 km/h (28 mph) or less.

5th Gear Lock−up Prohibition Control

- Brake pedal is depressed.
- Accelerator pedal is released.
- Engine coolant temperature is 60 °C (140 °F) or less.

(2) Check for shift shock and slip.

Check for shock and slip at the 1 → 2, 2 → 3, 3 → 4 and 4 → 5th up−shifts.

(3) Check for abnormal noise and vibration.

Check for abnormal noise and vibration when up−shifting from 1 → 2, 2 → 3, 3 → 4 and 4 → 5 while driving with the shift lever in the D position, and check while driving in the lock−up condition.

HINT:

The check for the cause of abnormal noise and vibration must be done thoroughly as it could also be due to loss of balance in the differential, torque converter clutch, etc.

(4) Check kick−down operation.

Check vehicle speeds when the 2nd to 1st, 3rd to 2nd, 4th to 3rd, and 5th to 4th kick−downs take place while driving with the shift lever in the D position. Confirm that each speed is within the applicable vehicle speed range indicated in the automatic shift schedule (See page SS−50).

(5) Check abnormal shock and slip at kick−down.

(6) Check the lock−up mechanism.

- Drive in the D position (5th gear), at a steady speed (lock−up ON).
- Lightly depress the accelerator pedal and check that the engine speed does not change abruptly.

HINT:

If there is a big jump in engine speed, there is no lock−up.

(b) 4 (O/D OFF) position test:
Shift into the 4 (O/D OFF) position and fully depress the accelerator pedal and check the following points.
(1) Check up−shift operation.
Check that the 1 → 2, 2 → 3 and 3 → 4 up−shifts take place and that the shift point conforms to the automatic shift schedule (See page SS−50).

HINT:
- There is no 5th up−shift in the 4 position.
- 4th Gear Lock−up Prohibition Control
  - Brake pedal is depressed.
  - Accelerator pedal is released.
  - Engine coolant temperature is 60 °C (140 °F) or less.

(2) Check engine braking.
While driving in the 4 position and 4th gear, release the accelerator pedal and check the engine braking effect.
(3) Check for abnormal noises during acceleration and deceleration, and for shock at up−shift and down−shift.
(4) Check the lock−up mechanism.
  - Drive in 4 position 4th gear, at a steady speed (lock−up ON).
  - Lightly depress the accelerator pedal and check that the engine speed does not change abruptly.

HINT:
If there is a big jump in engine speed, there is no lock−up.

(c) 3 position test:
Shift into the 3 position and fully depress the accelerator pedal and check the following points.
(1) Check up−shift operation.
Check that the 1 → 2 and 2 → 3 up−shifts takes place and that the shift point conforms to the automatic shift schedule (See page SS−50).

HINT:
- There is no 4th up−shift and lock−up in the 3 position.
- When the 2nd start switch is ON, there is no 1 → 2 up−shift and 2 → 1 down−shift.

(2) Check engine braking.
While running in the 3 position and 3rd gear, release the accelerator pedal and check the engine braking effect.
(3) Check for abnormal noises during acceleration and deceleration, and for shock at up−shift and down−shift.

(d) 2 position test:
Shift into the 2 position and fully depress the accelerator pedal and check the following points.
(1) Check up−shift operation.
Check that the 1 → 2 up−shift takes place and that the shift point conforms to the automatic shift schedule (See page SS−50).

HINT:
- There is no 3rd up−shift and lock−up in the 2 position.
- When the 2nd start switch is ON, there is no 1 → 2 up−shift and 2 → 1 down−shift.

(2) Check engine braking.
While running in the 2 position and 2nd gear, release the accelerator pedal and check the engine braking effect.

(3) Check for abnormal noises during acceleration and deceleration, and for shock at up−shift and down−shift.

(e) L position test:
Shift into the L position and fully depress the accelerator pedal and check the following points.

(1) Check no up−shift.
While running in the L position, check that there is no up−shift to 2nd gear.

(2) Check engine braking.
While running in the L position, release the accelerator pedal and check the engine braking effect.

(3) Check for abnormal noises during acceleration and deceleration.

(f) R position test:
Shift into the R position, lightly depress the accelerator pedal, and check that the vehicle moves backward without any abnormal noise or vibration.

CAUTION:
Before conducting this test, ensure that the test area is free from people and obstruction.

(g) P position test:
Stop the vehicle on a grade (more than 5°) and after shifting into the P position, release the parking brake. Then, check that the parking lock pawl holds the vehicle in place.

DIDUP−01

SYSTEM DESCRIPTION

SYSTEM DESCRIPTION

The ECT (Electronic controlled automatic transmission) is an automatic transmission that electronically controls shift timing using the ECM. The ECM detects electrical signals that indicate engine and driving conditions, and controls the shift point, based on driver habits and road conditions. As a result, fuel efficiency and power transmission performance are improved.

Shift shock has been reduced by controlling the engine and transmission simultaneously.

In addition, the ECT has features such as follows:

- Diagnostic function.
- Fail−safe function when a malfunction occurs.

DIDUO−01

SYSTEM DIAGRAM

The configuration of the electronic control system in the A750E automatic transmission is as shown in the following chart.

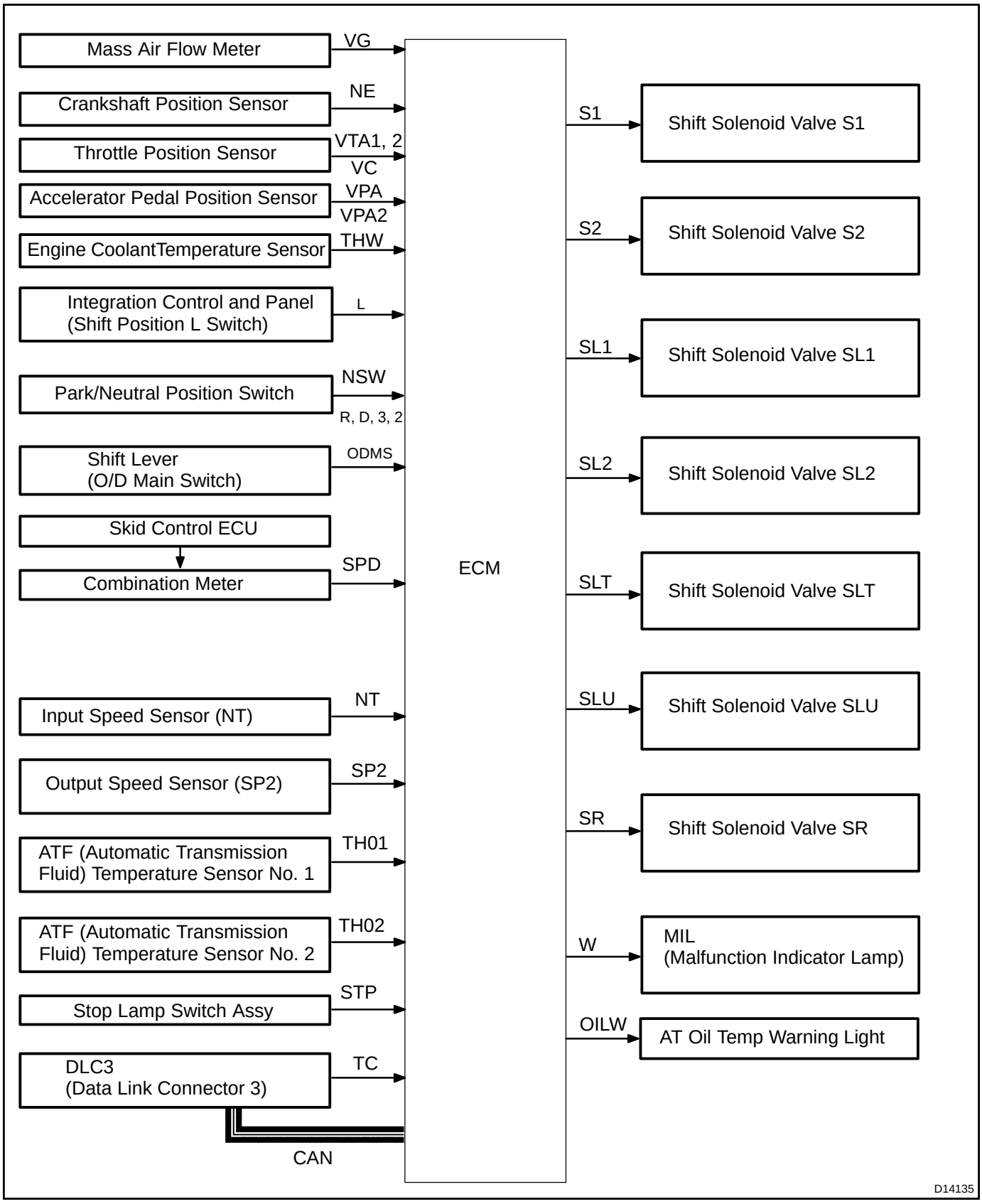

DIDV1−01

TERMINALS OF ECM

1. ECM

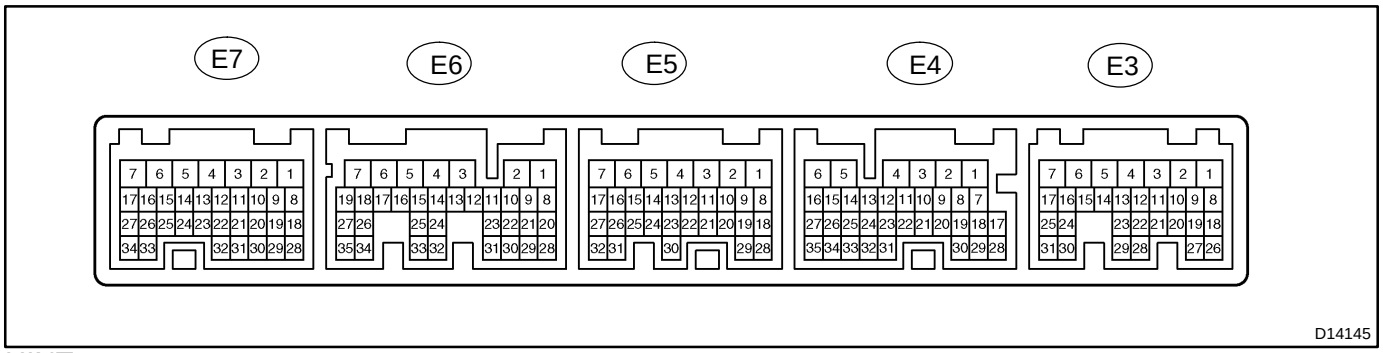

HINT:

Each ECM terminal's standard voltage is shown in the table below.

In the table, first follow the information under "Condition". Look under "Symbols (Terminal No.)" for the terminals to be inspected. The standard voltage between the terminals is shown under "Specific Condition".

Use the illustration above as a reference for the ECM terminals.

Symbols (Terminals No.)	Wiring Color	Terminal Description	Condition	Specified Condition
LMS (E4−9) − E1 (E5−1)	V−W − BR	L shift position switch signal	IG switch ON	10 to 14 V
↑	↑	↑	IG switch ON and Press continuously shift position L switch	Below 1 V
2 (E4−10) − E1 (E5−1)	P−L − BR	2 shift position switch signal	IG switch ON and shift lever 2 and L position	10 to 14 V
↑	↑	↑	IG switch ON and shift lever except 2 and L position	Below 1 V
R (E4−11) − E1 (E5−1)	G−R − BR	R shift position switch signal	IG switch ON and shift lever R position	10 to 14 V
↑	↑	↑	IG switch ON and shift lever except R position	Below 1 V
D (E4−21) − E1 (E5−1)	W−R − BR	D shift position switch signal	IG switch ON and shift lever D position	10 to 14 V
↑	↑	↑	IG switch ON and shift lever except D position	Below 1 V
3 (E4−19) − E1 (E5−1)	G−W − BR	3 shift position switch signal	IG switch ON and shift lever 3 position	10 to 14 V
↑	↑	↑	IG switch ON and shift lever except 3 position	Below 1 V
ODMS (E3−12) − E1 (E5−1)	R − BR	O/D main switch signal	IG switch ON	10 to 14 V
↑	↑	↑	IG switch ON and press continuously O/D main switch	Below 1 V
STP (E3−15) − E1 (E5−1)	G−W − BR	Stop lamp switch signal	Brake pedal is depressed	7.5 to 14 V
↑	↑	↑	Brake pedal is released	Below 1.5 V
SLU+ (E6−15) − SLU− (E6−14)	G − L−B	SLU solenoid signal	5th (lock−up) gear	Pulse generation (See waveform 2)
S2 (E6−10) − E1 (E5−1)	W−L − BR	S2 solenoid signal	2nd or 3rd gear	10 to 14 V
↑	↑	↑	1st, 4th or 5th gear	Below 1 V
S1 (E6−11) − E1 (E5−1)	P−L − BR	S1 solenoid signal	1st or 2nd gear	10 to 14 V
↑	↑	↑	3rd, 4th or 5th gear	Below 1 V

SLT+ (E6−13) − SLT− (E6−12)	B−R − G−W	SLT solenoid signal	Engine idle speed	Pulse generation (See waveform 1)
SR (E6−9) − E1 (E5−1)	W−G − BR	SR solenoid signal	5th gear	10 to 14 V
↑	↑	↑	1st gear	Below 1 V
SL2+ (E6−17) − SL2− (E6−16)	B − W	SL2 solenoid signal	Engine idle speed	Pulse generation (See waveform 3)
SL1+ (E6−19) − SL1− (E6−18)	R−W − GR	SL1 solenoid signal	Engine idle speed	Pulse generation (See waveform 4)
THO1 (E6−24) − E2 (E7−28)	R−L − B−W	No.1 ATF temperature sensor signal	No.1 ATF temperature: 115 °C (239 °F) or more	Below 1.5 V
THO2 (E6−32) − E2 (E7−28)	V − B−W	No.2 ATF temperature sensor signal	No.2 ATF temperature: 115 °C (239 °F) or more	Below 1.5 V
SP2+ (E6−34) − SP2− (E6−26)	Y−R − W−R	Speed sensor (SP2) signal	Vehicle speed 20 km/h (12 mph)	Pulse generation (See waveform 6)
NT+ (E6−35) − NT− (E6−27)	G − R	Speed sensor (NT) signal	Engine idle speed	Pulse generation (See waveform 5)
STAR/NSW (E6−8) − E1 (E5−1)	L−R − BR	Park neutral switch signal	IG switch ON and shift lever P and N position	Below 2 V
↑	↑	↑	IG switch ON and shift lever except P and N position	10 to 14 V

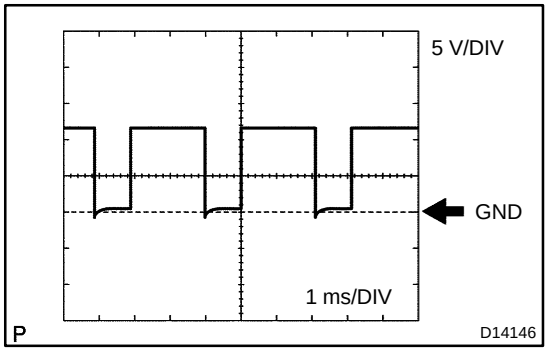

Waveform 1

Reference:

Terminal	SLT+ − SLT−
Tool setting	5V/DIV, 1ms/DIV
Vehicle condition	Engine idle speed

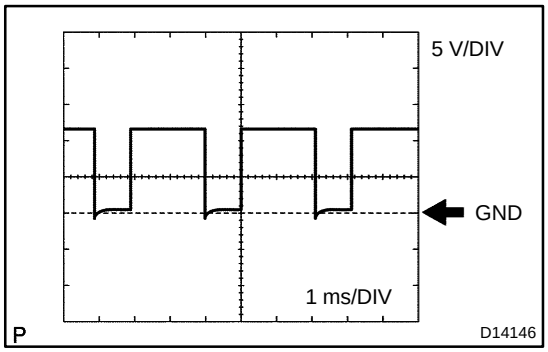

Waveform 2

Reference:

Terminal	SLU+ − SLU−
Tool setting	5V/DIV, 1ms/DIV
Vehicle condition	5th (lock−up) or 6th (lock−up) gear

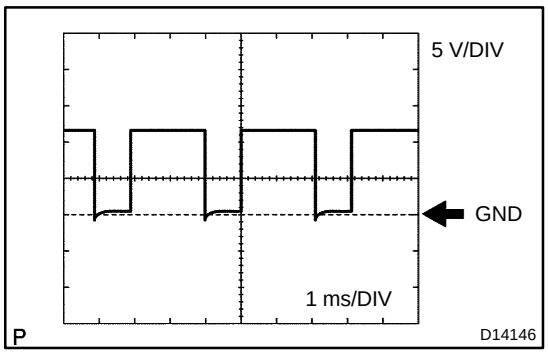

Waveform 3

Reference:

Terminal	SL2+ − SL2−
Tool setting	5V/DIV, 1ms/DIV
Vehicle condition	Engine idle speed

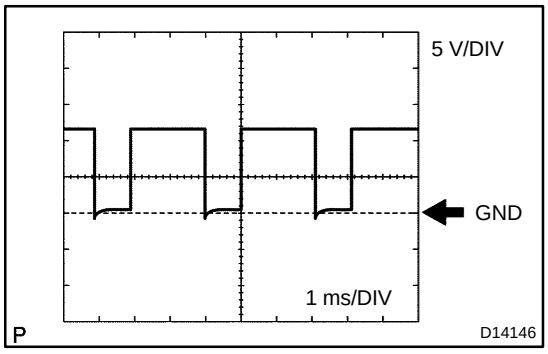

Waveform 4

Reference:

Terminal	SL1+ − SL1−
Tool setting	5V/DIV, 1ms/DIV
Vehicle condition	Engine idle speed

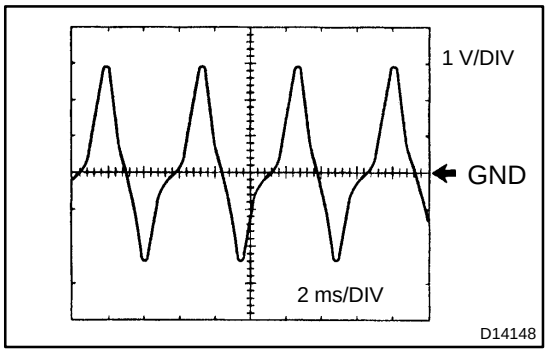

Waveform 5

Reference:

Terminal	NT+ − NT−
Tool setting	1V/DIV, 2ms/DIV
Vehicle condition	Engine idle speed (P or N position)

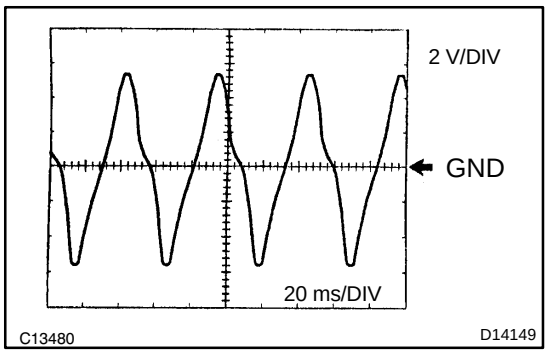

Waveform 6

Reference:

Terminal	SP2+ − SP2−
Tool setting	2V/DIV, 20ms/DIV
Vehicle condition	Vehicle speed 20 km/h (12 mph)

DIDUM−01

TOYOTA PART AND SYSTEM NAME LIST

This reference list indicates the part names used in this manual along with their definitions.

Part and system name	Definition
Toyota HCAC system, Hydrocarbon adsorptive Catalyst (HCAC) system, HC adsorptive three−way catalyst	HC adsorptive three−way catalytic converter
Variable Valve Timing sensor, VVT sensor	Camshaft position sensor
Variable valve timing system, VVT system	Camshaft timing control system
Camshaft timing oil control valve, Oil control valve OCV, VVT, VSV	Camshaft timing oil control valve
Variable timing and lift, VVTL	Camshaft timing and lift control
Crankshaft position sensor ”A”	Crankshaft position sensor
Engine speed sensor	Crankshaft position sensor
THA	Intake air temperature
Knock control module	Engine knock control module
Knock sensor	Engine knock sensor
Mass or volume air flow circuit	Mass air flow sensor circuit
Vacuum sensor	Manifold air pressure sensor
Internal control module, Control module, Engine control ECU, PCM	Power train control module
FC idle	Deceleration fuel cut
Idle air control valve	Idle speed control
VSV for CCV, Canister close valve VSV for canister control	Evaporative emissions canister vent valve
VSV for EVAP, Vacuum switching valve assembly No. 1, EVAP VAV, Purge VSV	Evaporative emissions canister purge valve
VSV for pressure switching valve, Bypass VSV	Evaporative emission pressure switching valve
Vapor pressure sensor, EVAP pressure sensor, Evaporative emission control system pressure sensor	Fuel tank pressure sensor
Charcoal canister	Evaporative emissions canister
ORVR system	On−board refueling vapor recovery system
Intake manifold runner control	Intake manifold tuning system
Intake manifold runner valve, IMRV, IACV (runner valve)	Intake manifold tuning valve
Intake control VSV	Intake manifold tuning solenoid valve
AFS	Air fuel ratio sensor
O2 sensor	Heater oxygen sensor
Oxygen sensor pumping current circuit	Oxygen sensor output signal
Oxygen sensor reference ground circuit	Oxygen sensor signal ground
Accel position sensor	Accelerator pedal position sensor
Throttle actuator control motor, Actuator control motor, Electronic throttle motor, Throttle control motor	Electronic throttle actuator
Electronic throttle control system, Throttle actuator control system	Electronic throttle control system
Throttle/pedal position sensor, Throttle/pedal position switch, Throttle position sensor/switch	Throttle position sensor
Turbo press sensor	Turbocharger pressure sensor
Turbo VSV	Turbocharger pressure control solenoid valve
P/S pressure switch	Power−steering pressure switch
VSV for ACM	Active control engine mount
Speed sensor, Vehicle speed sensor ”A”, Speed sensor for skid control ECU	Vehicle speed sensor
ATF temperature sensor, Trans. fluid temp. sensor, ATF temperature sensor ”A”	Transmission fluid temperature sensor
Electronic controlled automatic transmission, ECT	Electronically controlled automatic
Intermediate shaft speed sensor ”A”	Counter gear speed sensor

Output speed sensor	Output shaft speed sensor
Input speed sensor, Input turbine speed sensor ”A”, Speed sensor (NT), Turbine speed sensor	Input turbine speed sensor
PNP switch, NSW	Park/neutral position switch
Pressure control solenoid	Transmission pressure control solenoid
Shift solenoid	Transmission shift solenoid valve
Transmission control switch, Shift lock control unit	Shift lock control module
Engine immobilizer system, Immobilizer system	Vehicle anti−theft system

DIDSS−01

BASIC INSPECTION

When the malfunction is not confirmed in the DTC check, troubleshooting should be carried out in all the possible circuits considered as causes of the problem. In many cases, by carrying out the basic engine check shown in the following flowchart, the location causing the problem can be found quickly and efficiently. Therefore, using this check is essential in the engine troubleshooting.

1	**Is battery voltage 11 V or more when engine stopped?**

NO → **Charge or replace battery.**

YES

2	**Is engine cranked?**

NO → **Proceed to page ST−1 and continue to troubleshoot.**

YES

3	**Does engine start?**

NO → **Go to step 6.**

YES

4	**Check air filter.**

PREPARATION:
Remove the air filter.
CHECK:
Visual check that the air filter is not excessively dirty or oily.

NG → **Repair or replace air filter.**

OK

5	**Check idle speed (See page EM−25).**

NG → **Proceed to problem symptoms table on page DI−33.**

OK

6	**Check fuel pressure (See page SF−5).**

NG → **Proceed to page SF−5 and continue to trouble-shoot.**

OK

7	**Check for spark (See page IG−1).**

NG → **Proceed to page IG−1 and continue to trouble-shoot.**

OK

Proceed to problem symptoms table on page DI−33.

DIDSR−01

CHECK FOR INTERMITTENT PROBLEMS

HINT:

Hand−held tester only:

Inspect the vehicle’s ECM using check mode. Intermittent problems are easier to detect with a hand−held tester when the ECM is in check mode. In check mode, the ECM uses 1trip detection logic, which is more sensitive to malfunctions than normal mode (default), which uses 2trip detection logic.

(c) Clear DTCs (see page DI−42).

(d) Switch the ECM from normal mode to check mode using a hand−held tester (see page DI−43).

(e) Perform a simulation test (see page IN−19).

(f) Check and wiggle the harness(es), connector(s) and terminal(s) (see page IN−30).

DIDX8−01

IACV Control VSV Circuit

CIRCUIT DESCRIPTION

This circuit opens and closes the Intake Air Control Valve (IACV) in response to the engine load in order to increase the intake efficiency (ACIS: Acoustic Control Induction System).
When the engine speed is between 2,200 and 4,100 rpm and the throttle valve opening angle is 60° or more, the ECM supplies current to the VSV (ON status), so the IACV will close. Besides that condition, the VSV is usually OFF and the IACV is open.

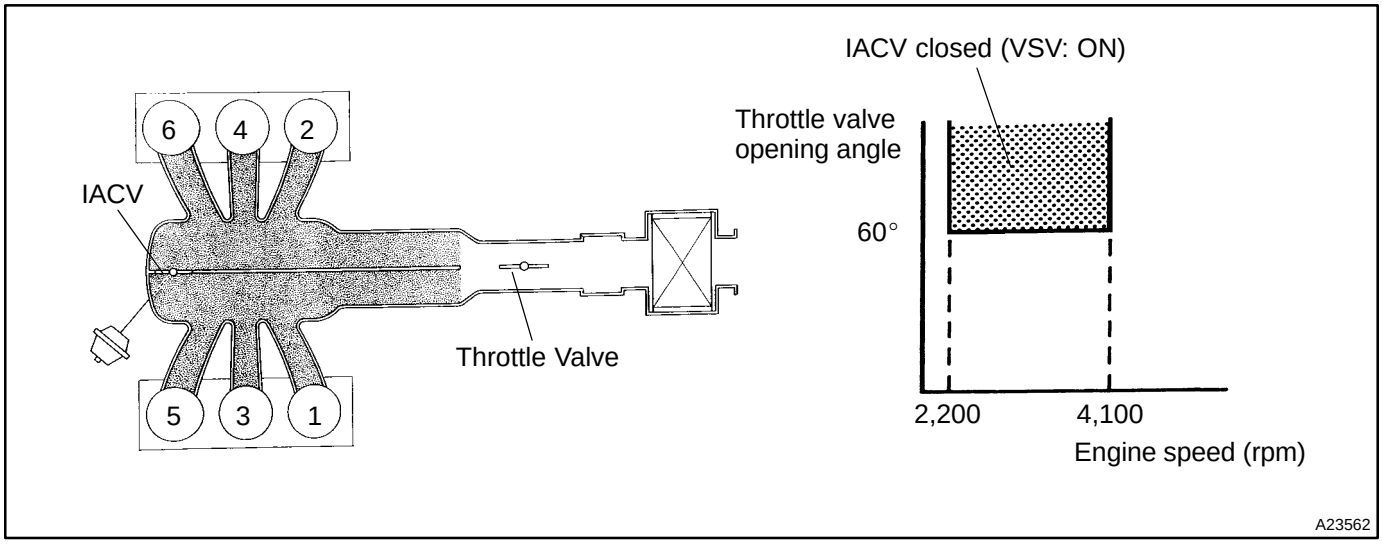

WIRING DIAGRAM

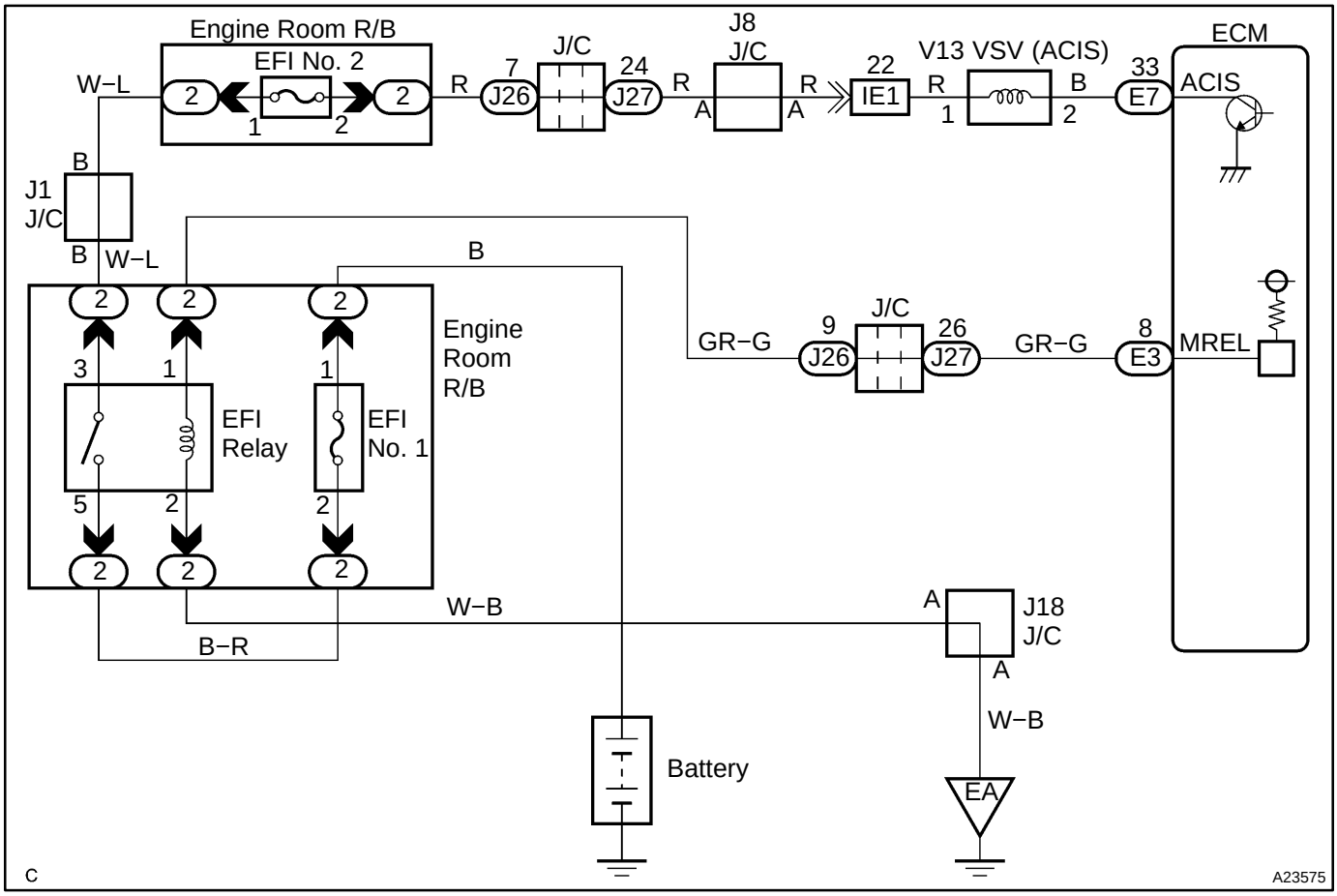

INSPECTION PROCEDURE

1	**Connect hand−held tester and check operation of VSV for ACIS.**

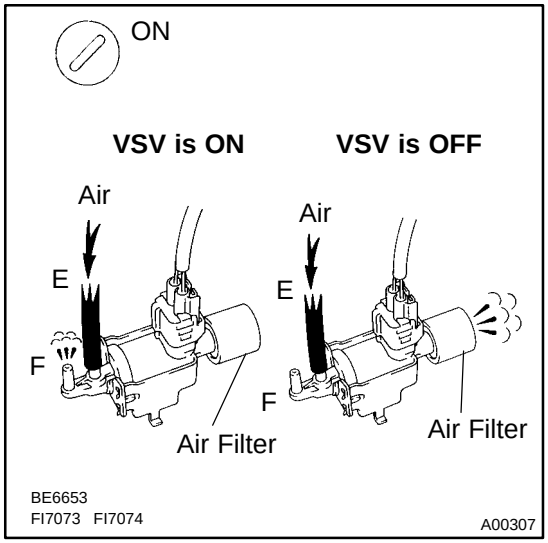

PREPARATION:

(a) Connect the hand−held tester to the DLC3.

(b) Turn the ignition switch to ON and hand−held tester main switch ON.

(c) Select the item: DIAGNOSIS / ENHANCED OBD II / ACTIVE TEST / INTAKE CTL VSV1. Operate the VSV for AICS.

CHECK:

Check operation of VSV when VSV is operated by the hand−held tester.

OK:

VSV is ON:
Air from pipe E is flowing out through pipe F.
VSV is OFF:
Air from pipe E is flowing out through the air filter.

OK	**Check for ACIS system (See page SF−49).**

NG

2	**Check VSV for ACIS (See page SF−49).**

NG	**Replace VSV for ACIS.**

OK

3	**Check for open and short in harness and connector between EFI main relay (Marking: EFI) and ECM.**

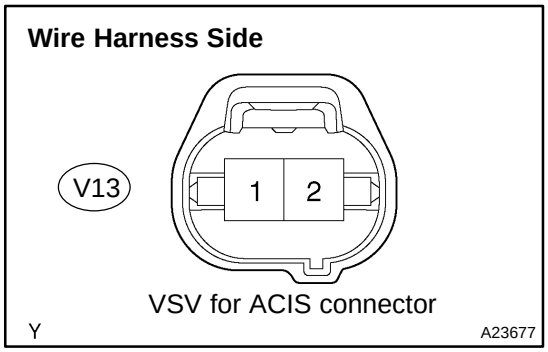

(a) Check the wire harness between the VSV for ACIS and connector the ECM connector.
  (1) Disconnect the VSV for ACIS connector.
  (2) Disconnect the E5 and E7 ECM connector.
  (3) Check for resistance between the wire harness side connectors.

Standard (Check for open):

Symbols (Terminal No.)	Specified condition
VSV for ACIS (V13−2) − ACIS (E7−33)	Below 1 Ω

Standard (Check for short):

Symbols (Terminal No.)	Specified condition
VSV for ACIS (V13−2) or ACIS (E7−33) − E1 (E5−1)	10 kΩ or higher

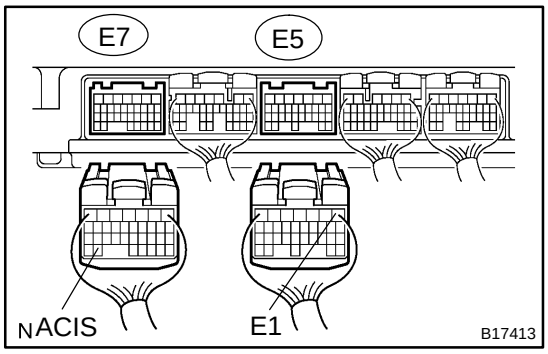

(b) Check the wire harness between the VSV for ACIS connector and the EFI relay.
  (1) Disconnect the VSV for ACIS connector.
  (2) Remove the EFI relay from the engine room R/B.
  (3) Check for resistance between the wire harness side connectors.

Standard (Check for open):

Symbols (Terminal No.)	Specified condition
VSV for ACIS (V13−1) − EFI relay terminal 3 of R/B	Below 1 Ω

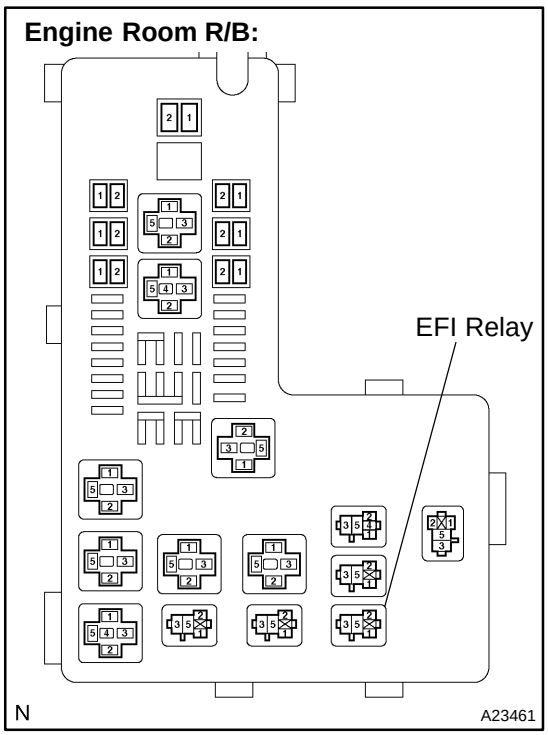

NG → **Repair or replace harness or connector.**

OK

Replace ECM (See page SF−66).

DIDUD−01

Cranking Holding Function Control Circuit

CIRCUIT DESCRIPTION

The system detects the ignition switch's starting signal (STSW signal) and then supplies current to the starter until the ECM judges that the engine has started successfully. The purpose is to reduce the holding time of the ignition key.

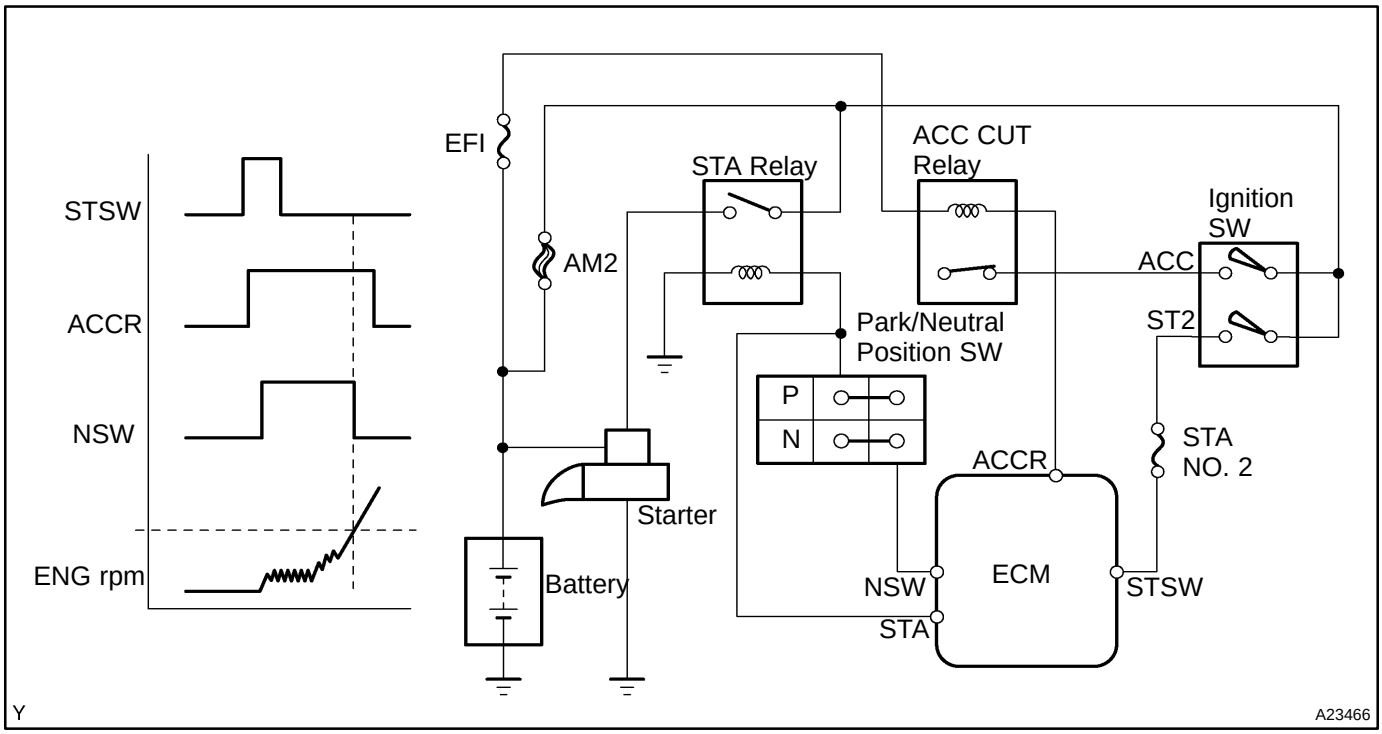

WIRING DIAGRAM

Refer to DTC P0617 on page DI−276.

INSPECTION PROCEDURE

1	**Check operation of engine cranking.**

CHECK:

When turning the ignition switch to the START position, check whether the starter motor starts.

OK:

Engine is cranked.

OK → **Check for intermittent problems (See page DI−11).**

NG

2	**Connect hand−held tester, and check STA signal.**

PREPARATION:

(a) Connect the hand−held tester to the DLC3.
(b) Turn the ignition switch to ON, and push the hand−held tester main switch ON.
(c) On the hand−held tester, enter the following menu: DIAGNOSIS / ENHANCED OBD II / DATA LIST / ALL / STARTER SIG.

CHECK:

Read the STA signal on the hand−held tester while the starter operates.

OK:

Standard:

Ignition Switch Position	ON	START
STARTER SIG	OFF	ON

NG → **Repair or replace harness or connector.**

OK

3	**Check voltage between terminals STSW and STAR/NSW of ECM connector.**

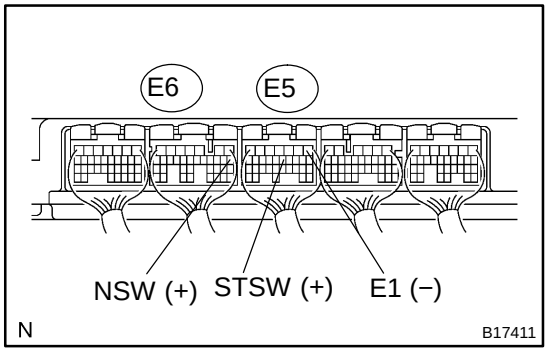

(a) Measure the voltage between the terminals of the E6 and E5 ECM connectors, while cranking the engine (ignition switch START position).

Standard:

Symbols (Terminal No.)	Specified condition
NSW (E6−8) − E1 (E5−1)	9 to 14 V
STSW (E5−12) − E1 (E5−1)	9 to 14 V

Result:

Terminal STAR	Terminal STSW	Proceed to
9 to 14 V	9 to 14 V	A
0 V	9 to 14 V	B
0 V	0 V	C

B → **Replace ECM (See page SF−66).**

C → **Go to step 8.**

A

4	Check park/neutral position switch assembly.

Component Side:

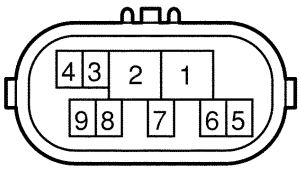

P D14154

(a) Disconnect the park/neutral position switch connector.
(b) Check for resistance between each terminal shown below when the shift lever is moved to each range.

Standard:

Shift range	Terminal No.	Specified condition
P	1 − 3 6 − 9	Below 1 Ω
R	2 − 3	Below 1 Ω
N	3 − 5 6 − 9	Below 1 Ω
D	3 − 7	Below 1 Ω
3	3 − 4	Below 1 Ω
2, L	3 − 8	Below 1 Ω

NG → **Check and repair harness and connector.**

OK →

5	Check starter relay.

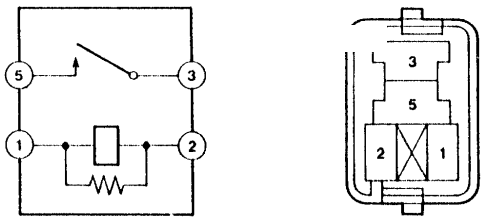

A19288

(a) Remove the starter relay from the engine room R/B.
(b) Inspect the starter relay.

Standard:

Terminal No.	Specified condition
3 − 5	10 kΩ or higher
3 − 5	Below 1 Ω (Apply battery voltage terminals 1 and 2)

NG → **Replace starter relay.**

OK →

6	Check harness and connector park/neutral position switch and starter relay.

Wire Harness Side

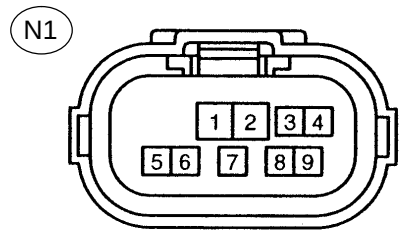

Park/Neutral position switch Connector

A23563

Engine Room R/B:

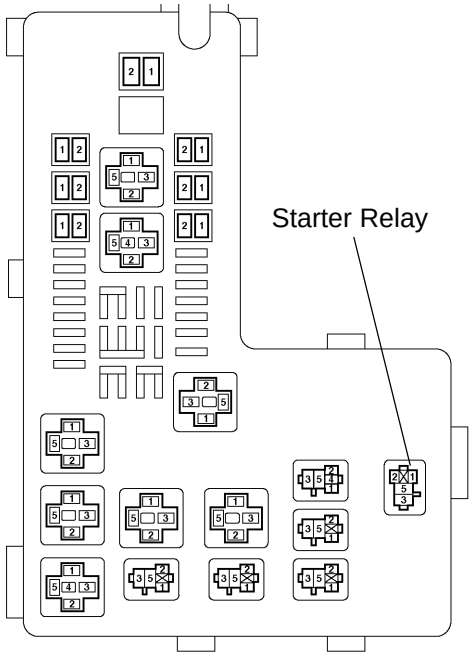

A23461

(a) Check the harness and the connector between the park/neutral position switch connector and the starter relay.
  (1) Disconnect the park/neutral position switch connector.
  (2) Remove the starter relay from the engine room R/B.
  (3) Check for resistance between the wire harness side connectors.

Standard (Check for open):

Symbols (Terminal No.)	Specified condition
Park/Neutral position switch (N1−6) − Starter relay (1)	Below 1 Ω

Standard (Check for short):

Symbols (Terminal No.)	Specified condition
Park/Neutral position switch (N1−6) or Starter relay (1) − Body ground	10 kΩ or higher

(b) Check the harness and the connector between the starter relay and the body ground.
  (1) Remove the starter relay from the engine room R/B.
  (2) Check for resistance between the starter relay and the body ground.

Standard (Check for open):

Symbols (Terminal No.)	Specified condition
Starter relay (2) − Body ground	Below 1 Ω

NG → **Repair or replace harness or connector.**

OK

7	Check starter assembly (See page ST−12 (1.6 kw) or ST−24 (2.0 kw))

NG → **Replace starter assembly.**

OK

8	Check STA fuse.

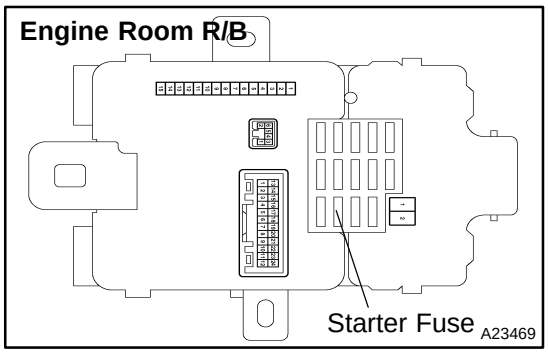

(a) Remove the starter relay from the engine room R/B.
(b) Measure the voltage between the terminal of the engine room R/B and the body ground.

Standard:

Symbols (Terminal No.)	Specified condition
Starter relay (5) − Body ground	9 to 14 V

NG → **Check for short in all harness and components connected to STA fuse, and replace fuse.**

OK

9	Check ignition switch.

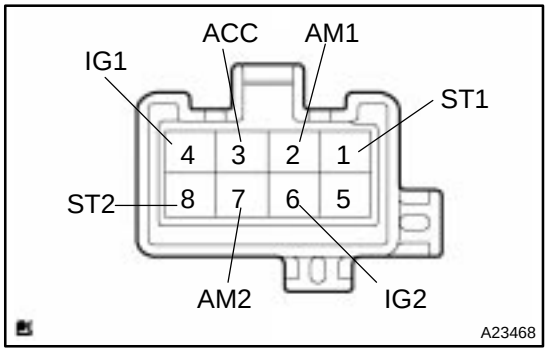

(a) Check for resistance between the connector terminals shown in the chart below.

Standard:

Switch position	Terminal No.	Specified condition
LOCK	All terminal to terminal	10 kΩ or higher
ACC	2 − 3	Below 1 Ω
ON	2 − 3, 2 − 4, 3 − 4 6 − 7	Below 1 Ω
START	1 − 2, 1 − 4, 2 − 4 6 − 7, 6 − 8, 7 − 8	Below 1 Ω

NG → **Replace ignition switch.**

OK

Check and repair harness and connector.

DIDUE−01

ECM Power Source Circuit

CIRCUIT DESCRIPTION

When the ignition switch is turned ON, battery positive voltage is applied to terminal IGSW of the ECM and the EFI relay control circuit in the ECM sends a signal to terminal MREL of the ECM switching on the EFI relay.

This signal causes current to flow to the coil, closing the contacts of the EFI relay and supplying power to terminal +B of the ECM.

WIRING DIAGRAM

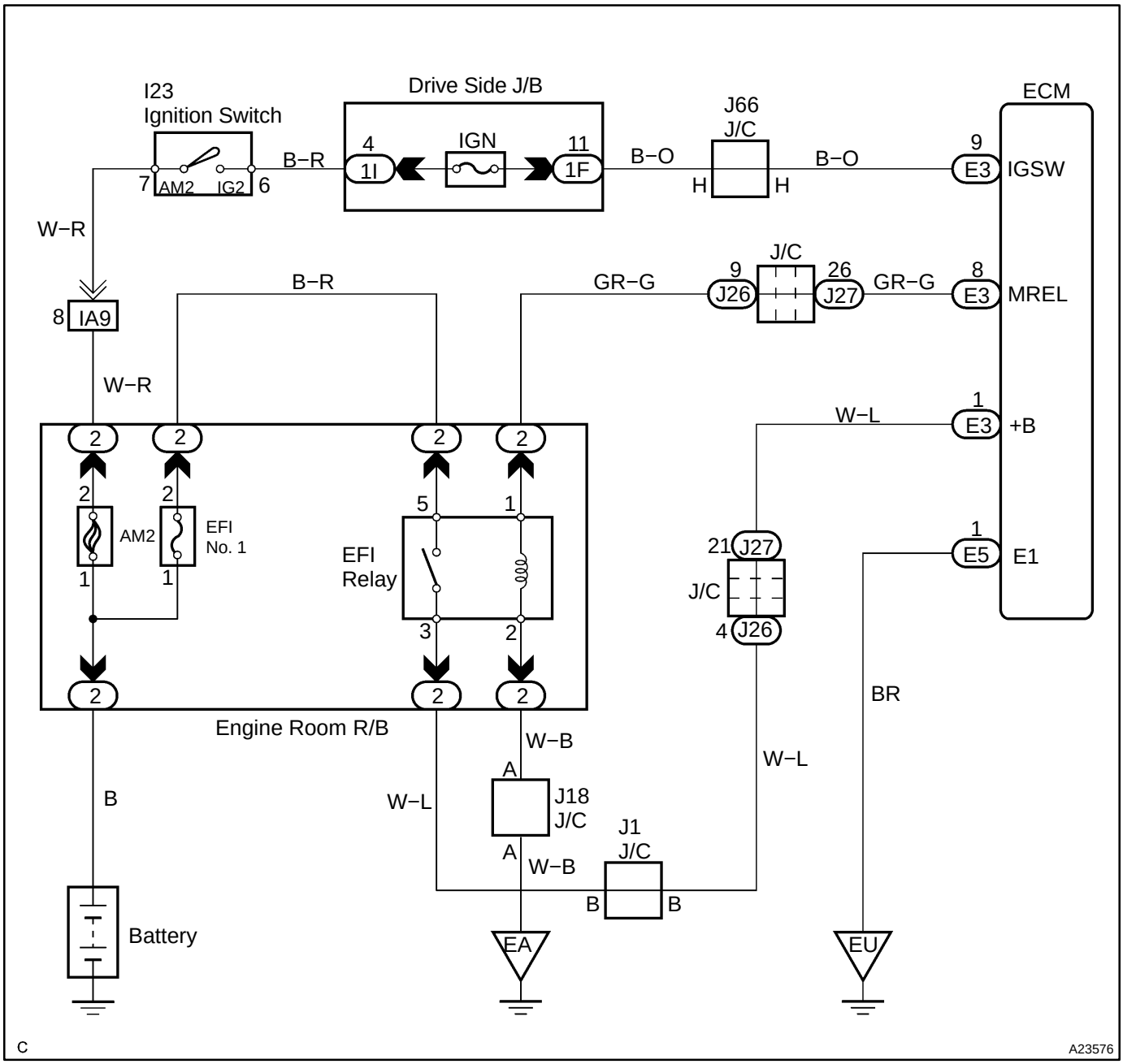

INSPECTION PROCEDURE

1	**Check voltage between terminals +B and E1 of ECM connector.**

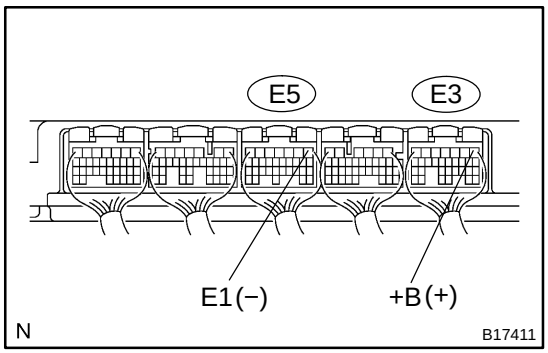

PREPARATION:
Turn the ignition switch to ON.
CHECK:
Measure the voltage between terminals +B and E1 of the ECM connectors.
OK:
Standard: 9 to 14 V

OK	**Proceed to next circuit inspection shown in the Problem symptoms table (See page DI−33).**

NG

2	**Check for open in harness and connector between terminal E1 of ECM and body ground (See page IN−30).**

NG	**Repair or replace harness or connector.**

OK

3	**Check voltage between terminal IGSW of ECM connector and body ground.**

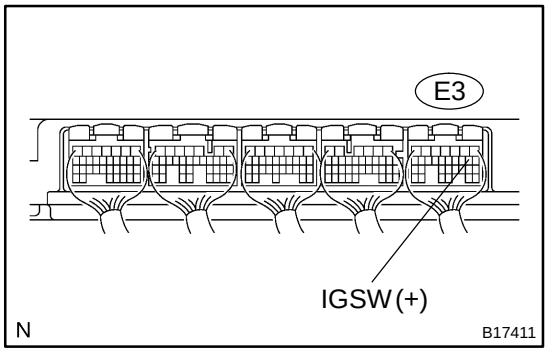

PREPARATION:
Turn the ignition switch to ON.
CHECK:
Measure the voltage between terminal IGSW of the ECM connector and body ground.
OK:
Standard: 9 to 14 V

OK	**Go to step 6.**

NG

4	Check IGN fuse.

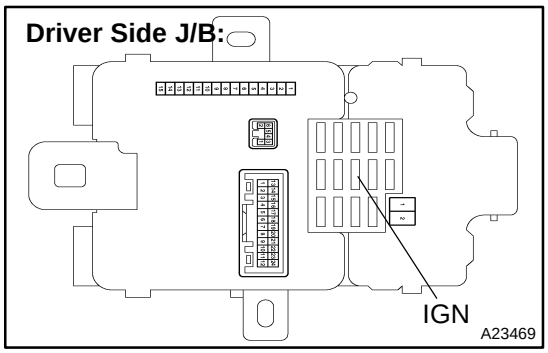

PREPARATION:
Remove the IGN fuse from the instrument panel J/B.
CHECK:
Check the resistance of the IGN fuse.
OK:
Below 1 Ω

NG → **Check for short in all harness and components connected to IGN fuse, and replace the fuse.**

OK

5	Check ignition switch (See page BE−37).

NG → **Replace ignition switch.**

OK

Check and repair harness and connector between battery and ignition switch, and ignition switch and ECM.

6	Check voltage between terminal MREL of ECM connector and body ground.

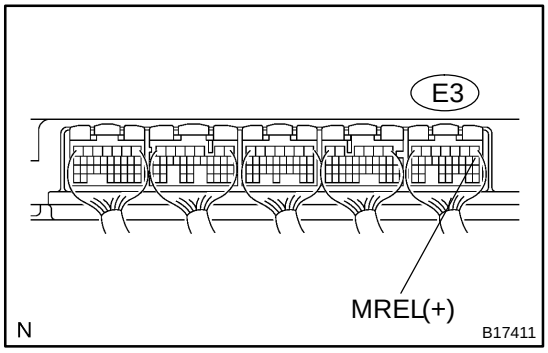

PREPARATION:
Turn the ignition switch to ON.
CHECK:
Measure the voltage between terminal MREL of the ECM connector and body ground.
OK:
Standard: 9 to 14 V

NG → **Replace ECM (See page SF−66).**

OK

7	Check EFI No. 1 fuse of engine room J/B.

Engine Room J/B:

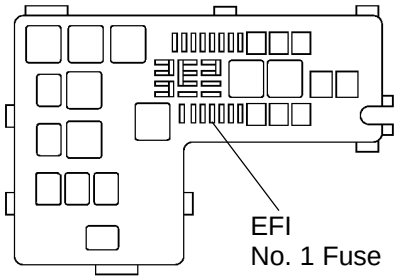

PREPARATION:
Remove the EFI No. 1 fuse from the engine room J/B.
CHECK:
Check resistance of EFI No. 1 fuse.
OK:
Below 1 Ω

NG → **Check for short in all harness and components connected to EFI No. 1 fuse, and replace the fuse.**

OK

8	Check EFI relay).

EFI Relay

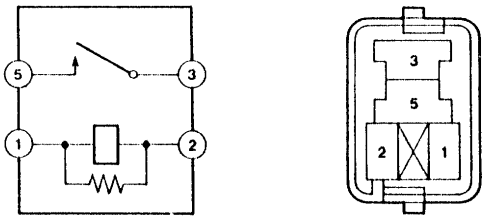

PREPARATION:
Remove the EFI relay from the engine room J/B.
CHECK:
Inspect the EFI relay.
OK:
Standard:

Terminal No.	Condition	Specified Condition
3 − 5	Always	10 KΩ or higher
3 − 5	Apply B+ between terminals 1 and 2	Below 1 Ω

NG → **Replace EFI relay.**

OK

9	Check for open and short in harness and connector between terminal MREL of ECM and body ground (See page IN−30).

NG → **Repair or replace harness or connector.**

OK

Check and repair harness or connector between EFI No. 1 fuse and battery.

DIDUC−01

EVAP (Evaporative Emission) Inspection Procedure

DTCS RELATING TO EVAP SYSTEM

DTCs	Monitoring Items	See Page
P043E	0.02 inch orifice clogged (built into pump module)	DI−353
P043F	0.02 inch orifice high−flow (built into pump module)	DI−353
P0441	• Purge VSV (Vacuum Switching Valve) stuck closed • Purge VSV stuck open • Purge flow	DI−236
P0450	Pressure sensor (built into pump module) voltage abnormal fluctuation	DI−243
P0451	• Pressure sensor (built into pump module) noise • Pressure sensor (built into pump module) signal becomes fixed/flat	DI−243
P0452	Pressure sensor (built into pump module) voltage low	DI−243
P0453	Pressure sensor (built into pump module) voltage high	DI−243
P0455	EVAP gross leak	DI−252
P0456	EVAP small leak	DI−252
P2401	Vacuum pump stuck OFF (built into pump module)	DI−339
P2402	Vacuum pump stuck ON (built into pump module)	DI−339
P2419	Vent valve stuck open (vent) (built into pump module)	DI−345
P2420	Vent valve stuck closed (built into pump module)	DI−345
P2610	Soak timer (built into ECM)	DI−351

If any EVAP system DTCs are set, the malfunctioning area can be determined using the table below.

DTCs / Malfunctioning Areas	P043E P043F	P0441	P0450	P0451	P0452	P0453	P0455	P0456	P2401 P2402	P2419	P2420
0.02 inch orifice clogged	●								●	●	
0.02 inch orifice high−flow	●								●	●	
Purge VSV stuck open		●					●				
Purge VSV stuck closed		●									
Pressure sensor stuck				●							
Pressure sensor noise				●							
Pressure sensor low output			●		●						
Pressure sensor high output			●			●					
Gross leak		●					●				
Small leak								●			
Vacuum pump stuck OFF	●								●	●	
Vacuum pump stuck ON	●								●	●	
Vent valve stuck open (vent)	●								●	●	
Vent valve stuck closed											●

NOTICE:

If the 0.02 inch reference pressure difference between the first and second checks is greater than the specification, the DTCs corresponding to the reference pressure (P043E, P043F, P0441, P0455, P0456, P2401, P2420) will be all stored.

CIRCUIT DESCRIPTION

Location of EVAP (Evaporative Emission) system:

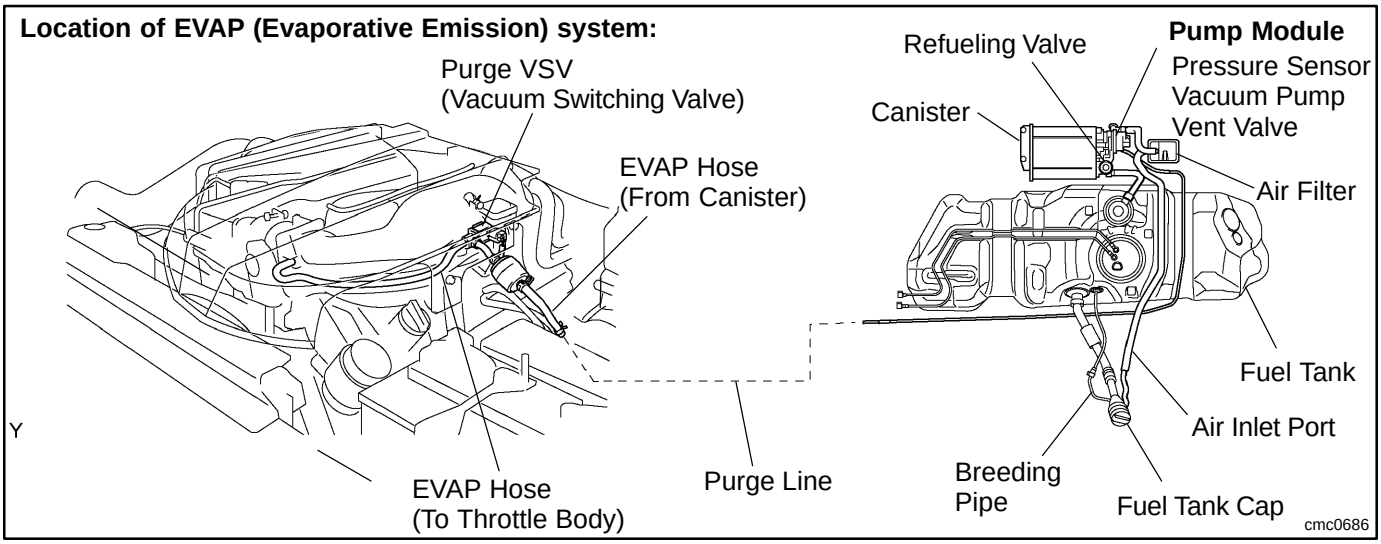

HINT:
The canister is located near the fuel tank, underneath the body.

EVAP System Circuit:

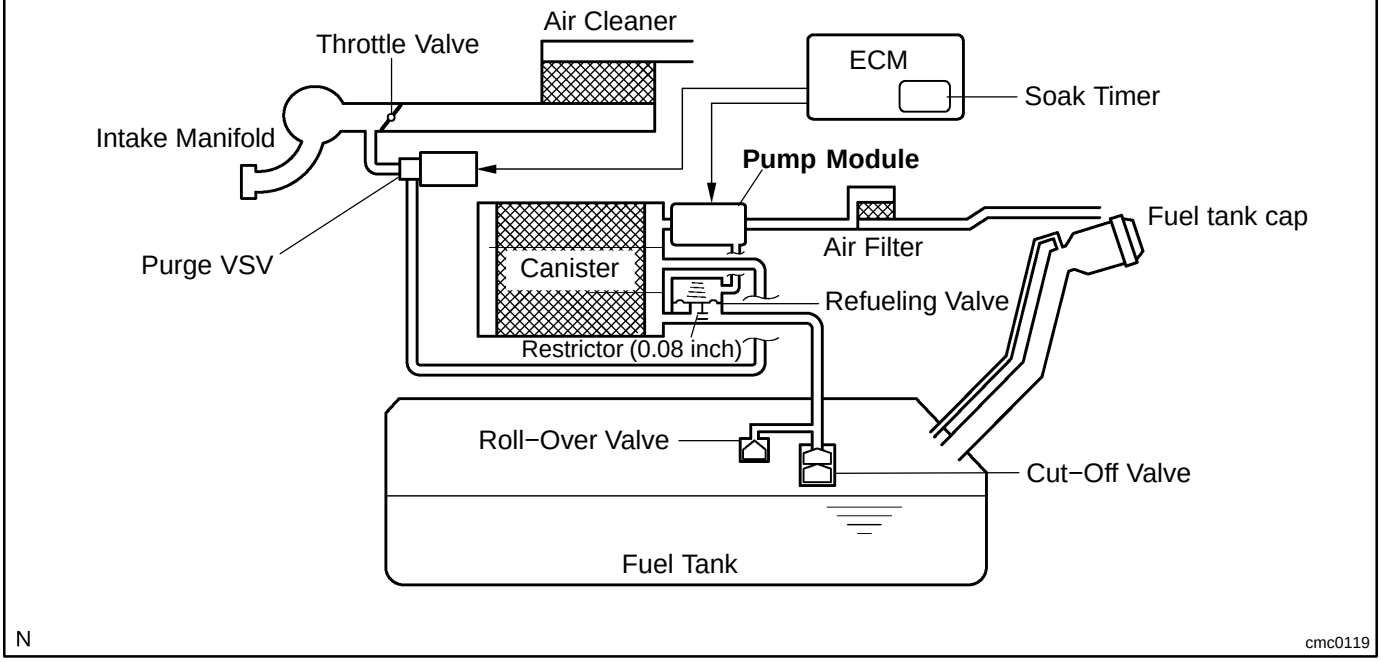

While the engine is running, if a predetermined condition (closed−loop, etc.) is met, the purge VSV is opened by the ECM and stored fuel vapors in the canister are purged to the intake manifold. The ECM changes the duty cycle ratio of the purge VSV to control purge flow volume.
The purge flow volume is also determined by the intake manifold pressure. Atmospheric pressure is allowed into the canister through the vent valve to ensure that the purge flow is maintained when the negative pressure (vacuum) is applied to the canister.
The following two monitors run to confirm appropriate EVAP system operation.

Key−off monitor

This monitor checks for EVAP (Evaporative Emission) system leaks and pump module malfunctions. The monitor starts 5 hours*after the ignition switch is turned OFF. More than 5 hours are required to allow enough time for the fuel to cool down to stabilize the Fuel Tank Pressure (FTP), thus making the EVAP system monitor more accurate.

The electric vacuum pump creates negative pressure (vacuum) in the EVAP system and the pressure is measured. Finally, the ECM monitors for leaks from the EVAP system, and malfunctions in both the pump module and purge VSV, based on the EVAP pressure.

HINT:

*:If the engine coolant temperature is not below 35°C 5 hours after the ignition switch is turned off, the monitor check starts 2 hours later. If it is still not below 35°C 7 hours after the ignition switch is turned off, the monitor check starts 2.5 hours later.

Purge flow monitor

The purge flow monitor consists of the two monitors. The 1st monitor is always conducted every time and the 2nd monitor is activated if necessary.

- The 1st monitor
  While the engine is running and the purge VSV (Vacuum Switching Valve) is ON (open), the ECM monitors the purge flow by measuring the EVAP pressure change. If negative pressure is not created, the ECM begins the 2nd monitor.
- The 2nd monitor
  The vent valve is turned ON (closed) and the EVAP pressure is then measured. If the variation in the pressure is less than 0.5 kpa (3.75 mmHg), the ECM interprets this as the purge VSV being stuck closed, and illuminates the MIL and sets DTC P0441 (2 trip detection logic).

Atmospheric pressure check:

In order to ensure reliable malfunction detection, the variation between the atmospheric pressures, before and after conduction of the purge flow monitor, is measured by the ECM.

EVAP Purge Flow:

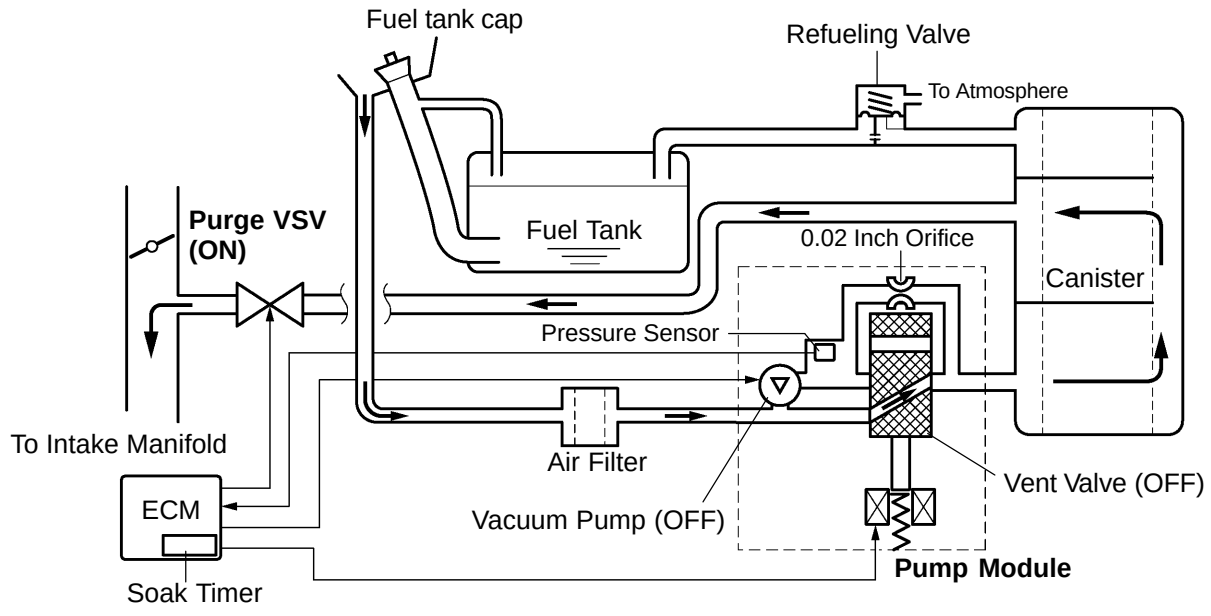

N

cmc0120

Components	Operations
Canister	Contains activated charcoal to absorb EVAP (Evaporative Emissions) generated in fuel tank.
Cut−off valve	Located in fuel tank. Valve floats and closes when fuel tank is 100 % full.
Purge VSV (Vacuum Switching Valve)	Opens or closes line between canister and intake manifold. ECM uses purge VSV to control EVAP purge flow. In order to discharge EVAP absorbed by canister to intake manifold, ECM opens purge VSV. EVAP discharge volume to intake manifold controlled by purge VSV duty cycle ratio (current−carrying time). (Open: ON, Close: OFF)
Refueling valve	Controls EVAP pressure from fuel tank to canister. Valve consists of diaphragm, spring and restrictor (diameter: 0.08 inch). When fuel vapor and pressure inside fuel tank increase, valve opens. While EVAP purged, valve closes and restrictor prevents large amount of vacuum from affecting pressure in fuel tank. Valve opened while refueling. When valve open, adding fuel into fuel tank possible.
Roll−over valve	Located in fuel tank. Valve closes by its own weight when vehicle overturns to prevent fuel from spilling out.
Service port	Used for connecting vacuum gauge for inspecting EVAP system.
Soak timer	Built into ECM. To ensure accurate EVAP monitor, measures 5 hours* after ignition switch turned to OFF. This allows fuel to cool down, stabilizing Fuel Tank Pressure (FTP). When approx. 5 hours* elapsed, ECM activates.
Pump module	Consists of (a) to (d) below. Pump module cannot be disassembled.
(a) Vent valve	Vents and closes EVAP system. When ECM turns valve ON, EVAP system closed. When, ECM turns valve OFF, EVAP system vented. Negative pressure (vacuum) created in EVAP system to check for EVAP leaks by closing purge VSV, turning on vent valve (closed) and operating vacuum pump (refer to fig. 1).
(b) Pressure sensor	Indicates pressure as voltages. ECM supplies regulated 5 V to pressure sensor, and uses feedback from sensor to monitor EVAP system pressure (refer to fig 2).
(c) Vacuum pump	Creates negative pressure (vacuum) in EVAP system for leak check.
(d) 0.02 inch orifice	Has opening with 0.02 inch diameter. Vacuum produced through orifice by closing purge VSV, turning off vent valve and operating vacuum pump, to monitor 0.02 inch leak pressure. 0.02 inch leak pressure indicates small leak of EVAP.

HINT:

*:If the engine coolant temperature is not below 35°C after 5 hours after the ignition switch is turned off, the monitor check starts 2 hours later. If it is still not below 35°C 7 hours after the ignition switch is turned off, the monitor check starts 2.5 hours later.

Pump Module (fig. 1):

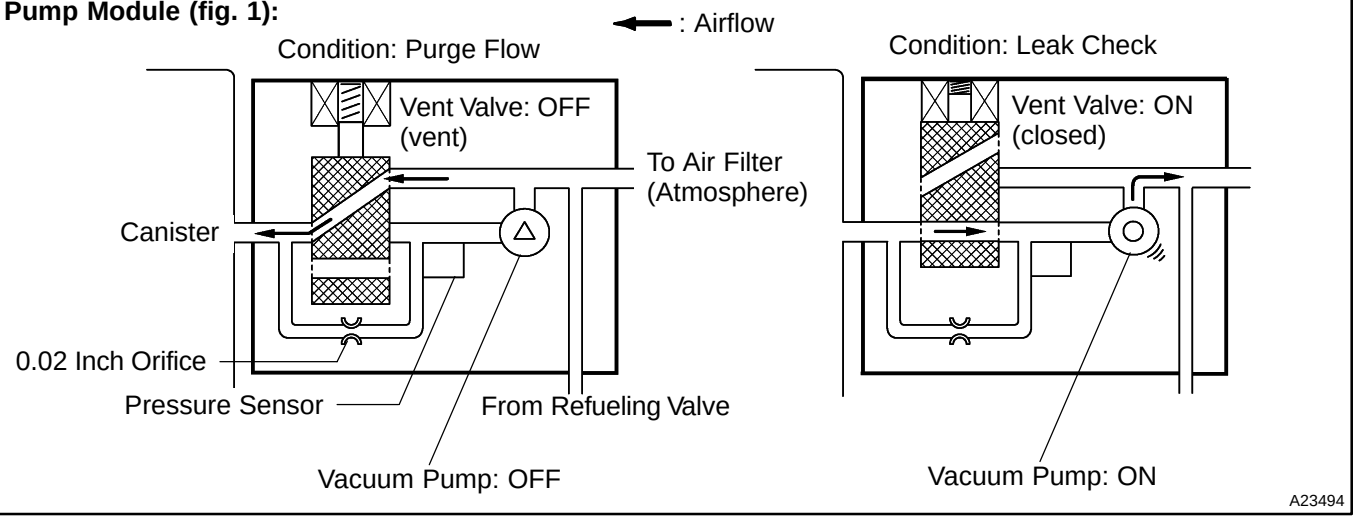

Pressure Sensor Specification (fig. 2)

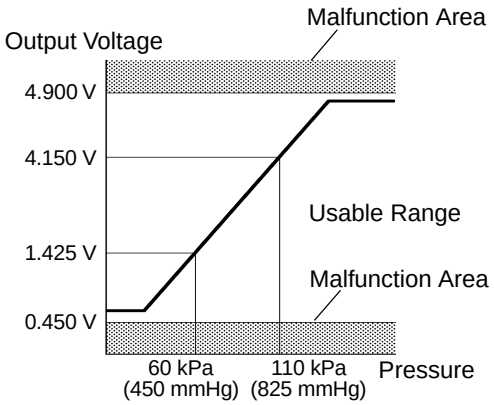

HINT:
Standard atmospheric pressure is
101.3 kPa (760 mmHg)

Soak Timer Circuit (fig. 3)

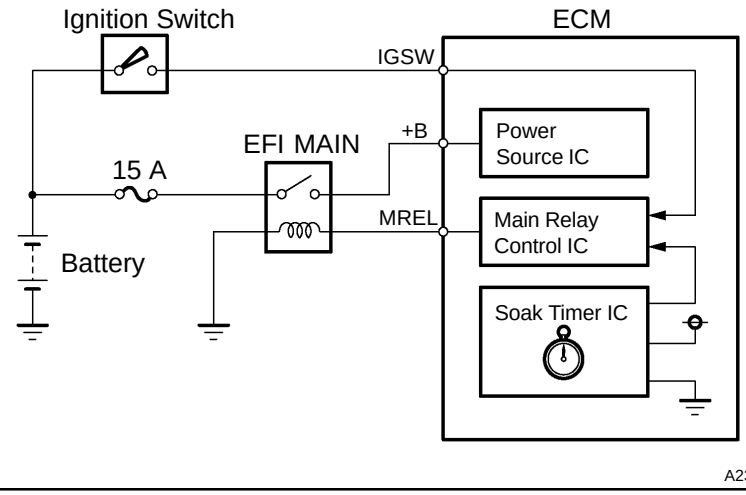

WIRING DIAGRAM

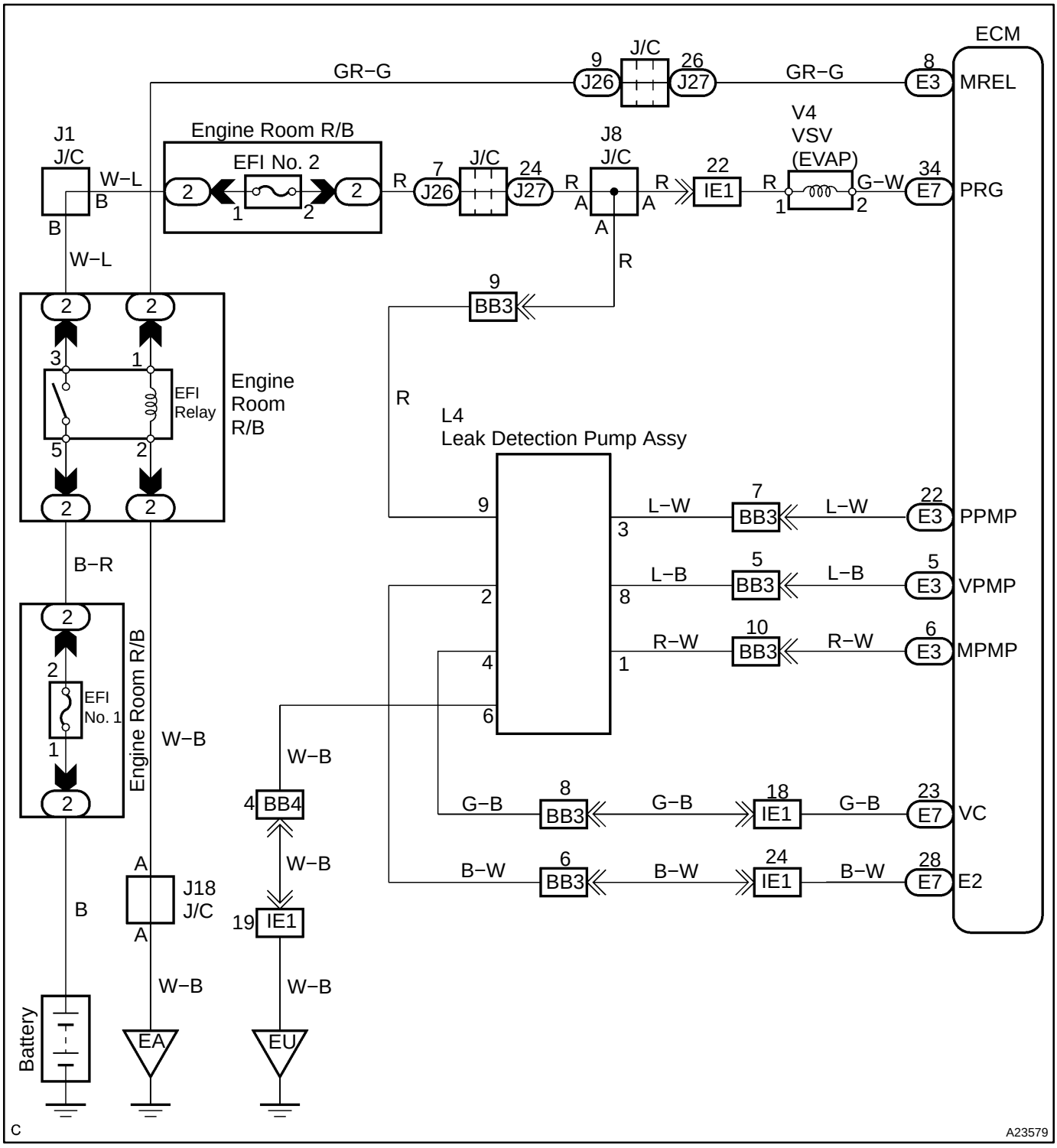

INSPECTION PROCEDURE

NOTICE:

A hand−held tester is required to conduct the following diagnostic troubleshooting procedure.

HINT:

- Using hand−held tester monitor results enables the EVAP (Evaporative Emission) system to be confirmed.
- Read freeze frame data using a hand−held tester Freeze frame data record the engine condition when malfunctions are detected. When troubleshooting, freeze frame data can help determine if the vehicle was moving or stationary, if the engine was warmed up or not, if the air−fuel ratio was lean or rich, and other data, from the time the malfunction occurred.

1	**Confirm DTC.**

(a) Turn the ignition switch to OFF and wait for 10 seconds.
(b) Turn the ignition switch to ON.
(c) Turn the ignition switch to OFF and wait for 10 seconds.
(d) Connect a hand−held tester to the DLC3.
(e) Turn the ignition switch to ON and turn the tester ON.
(f) Select the following menu items: DIAGNOSIS / ENHANCED OBD II / DTC INFO / CURRENT CODES.
(g) Confirm DTCs and freeze frame data.

If any EVAP system DTCs are set, the malfunctioning area can be determined using the table below.

DTCs / Malfunctioning Areas	P043E P043F	P0441	P0450	P0451	P0452	P0453	P0455	P0456	P2401 P2402	P2419	P2420
0.02 inch orifice clogged	●								●	●	
0.02 inch orifice high−flow	●								●	●	
Purge VSV stuck open		●					●				
Purge VSV stuck closed		●									
Pressure sensor signal becomes fixed/flat				●							
Pressure sensor noise				●							
Pressure sensor voltage low			●		●						
Pressure sensor voltage high			●			●					
Gross leak		●					●				
Small leak								●			
Vacuum pump stuck OFF	●								●	●	
Vacuum pump stuck ON	●								●	●	
Vent valve stuck ON (closed)	●								●	●	
Vent valve stuck OFF (vent)											●

NOTICE:

If the 0.02 inch reference pressure difference between the first and second checks is greater than the specification, the DTCs corresponding to the reference pressure (P043E, P043F, P0441, P0455, P0456, P2401, P2420) will be all stored.

NEXT

2	**Perform EVAP system check.**

NOTICE:

- **In the EVAP SYSTEM CHECK (AUTO OPERATION), the series of 5 EVAP SYSTEM CHECK steps is performed automatically by the hand−held tester. It takes a maximum of approximately 18 minutes.**
- **Do not perform the EVAP SYSTEM CHECK when the fuel tank is more than 90% full because the cut−off valve may be closed and making the leak check of the fuel tank unavailable.**
- **Do not run the engine in this step.**
- **When the temperature of the fuel is 35°C (95°F) or more, a large amount of vapor forms and any check results become inaccurate. When performing the EVAP SYSTEM CHECK, keep the temperature below 35°C (95°F).**

(a) Clear DTC (See page DI−42).

(b) On the hand−held tester, select the following menu items: DIAGNOSIS / ENHANCED OBD II / SYSTEM CHECK / EVAP SYS CHECK / AUTO OPERATION.

(c) After the EVAP SYSTEM CHECK is completed, check for pending DTCs by selecting the following menu items: DIAGNOSIS / ENHANCED OBD II / DTC INFO / PENDING CODES.

HINT:

If no pending DTC is displayed, perform the Monitor Confirmation after this repair is completed. After this confirmation, check for pending DTCs. If no DTC is displayed, the EVAP system is normal.

NEXT

3	**Perform EVAP system manual operation check.**

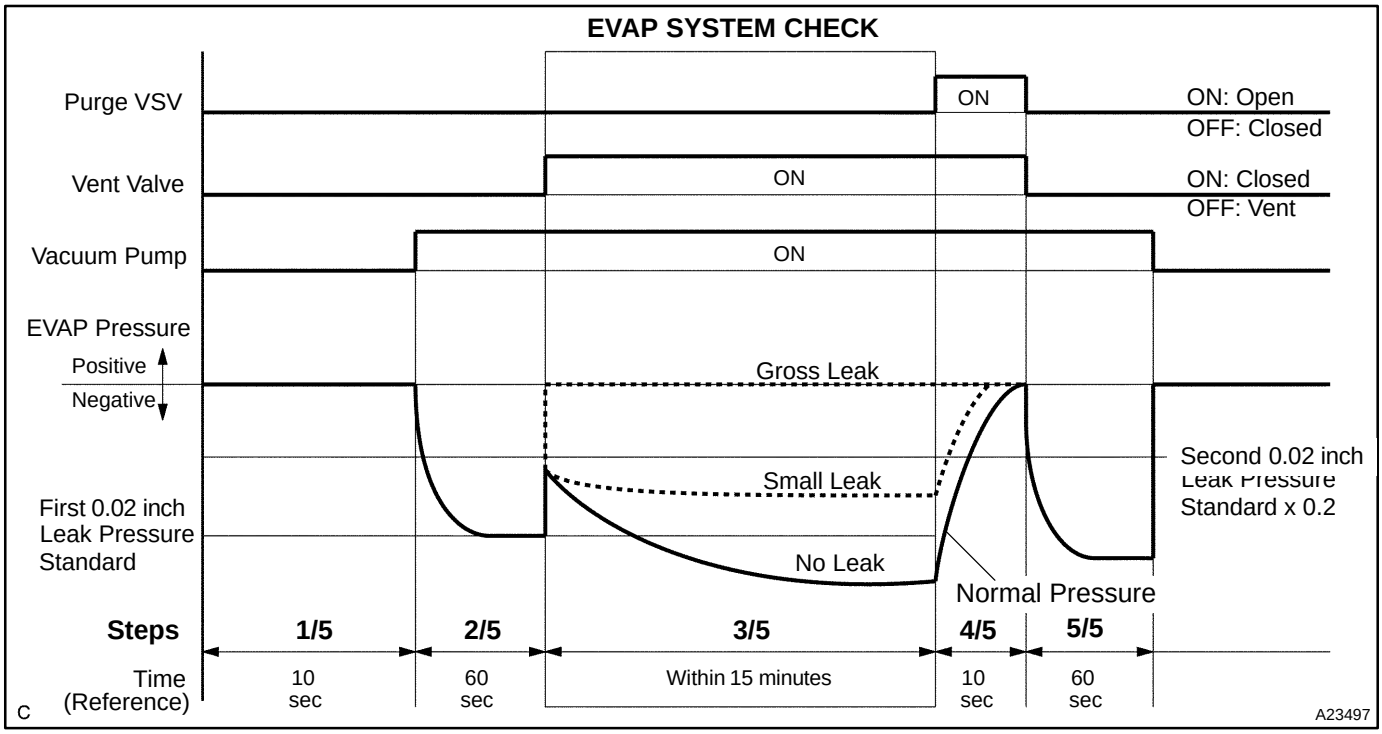

NOTICE:

- **In the EVAP SYSTEM CHECK (MANUAL OPERATION), the series of 5 EVAP SYSTEM CHECK steps is performed manually by the hand−held tester.**
- **Do not perform the EVAP SYSTEM CHECK when the fuel tank is more than 90% full because the cut−off valve may be closed and making the leak check of the fuel tank unavailable.**
- **Do not run the engine in this step.**
- **When the temperature of the fuel is 35°C (95°F) or more, a large amount of vapor forms and any check results become inaccurate. When performing the EVAP SYSTEM CHECK, keep the temperature below 35°C (95°F).**

(a) Clear DTC (See page DI−42).

(b) On the hand−held tester, select the following menu items: DIAGNOSIS / ENHANCED OBD II / SYSTEM CHECK / EVAP SYS CHECK / MANUAL OPERATION.

NEXT

4	**Perform EVAP system step 1/5 check.**

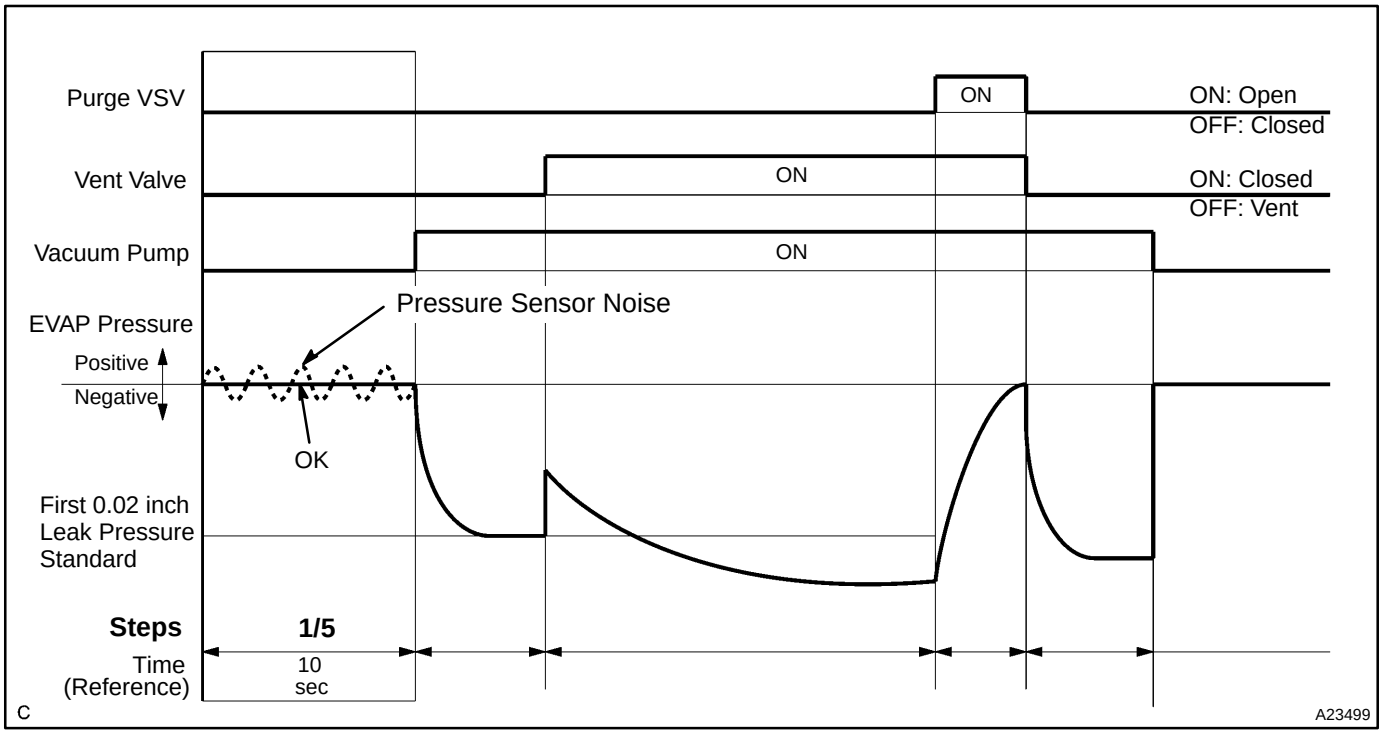

(a) Check the EVAP pressure in step 1/5.

Result:

DTCs*	Test Results	Suspected Trouble Areas	Proceed To
—	Virtually no variation in EVAP pressure	Not yet determined	A
P0451	EVAP pressure fluctuates by ±0.3 kPa (2.25 mmHg) or more	Pressure sensor noising	B

*: The DTCs relating to the EVAP system displayed on a hand−held tester when checking.

B → **Go to step 30**

A

5	**Perform EVAP system step 1/5 to 2/5 check.**

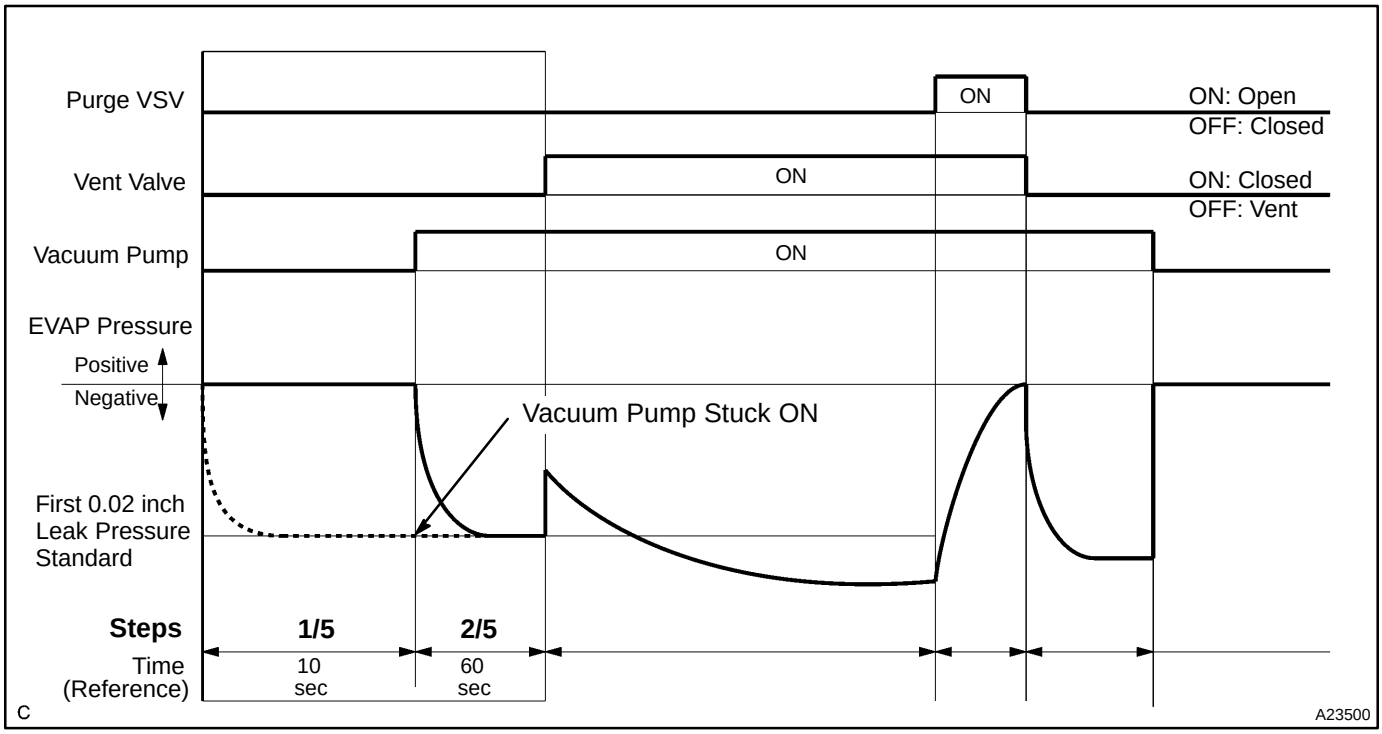

(a) Check the EVAP pressure in step 1/5 and 2/5.

Result:

DTCs*	Test Results	Suspected Trouble Areas	Proceed To
—	Virtually no variation in EVAP pressure during step 1/5. Then decreases to 0.02 inch leak pressure standard*	Not yet determined	A
P2402	Small difference between EVAP pressures during steps 1/5 and 2/5	Vacuum pump stuck ON	B

*: The DTCs relating to the EVAP system displayed on a hand−held tester when checking.

HINT:

The 0.02 inch leak pressure standard is the value determined in step 2/5.

B	**Go to step 23.**

A

6	Perform EVAP system step 2/5 check.

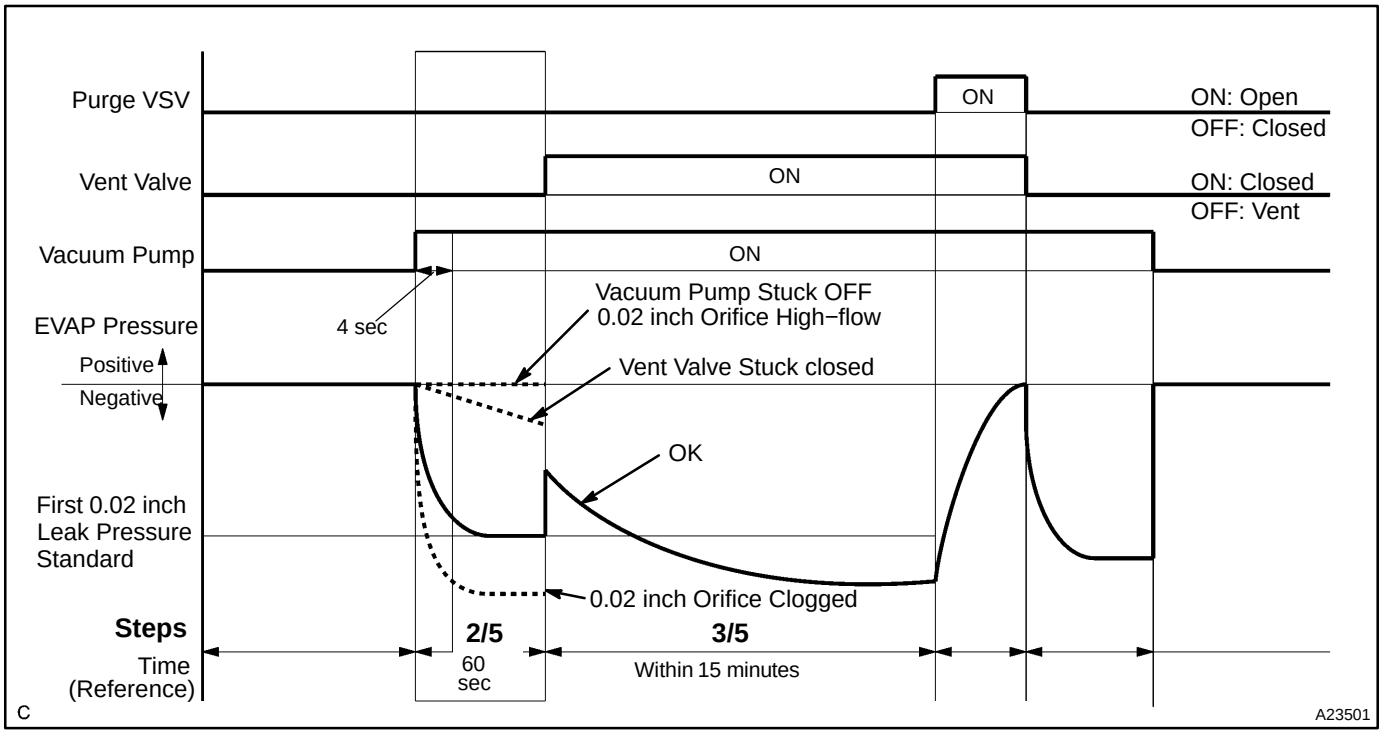

HINT:

Make a note of the pressures checked in steps (a) and (b) below.

(a) Check the EVAP pressure 4 seconds after the vacuum pump is activated*.

(b) Check the EVAP pressure again when it has stabilized. This pressure is the 0.02 inch leak pressure standard.

*: The vacuum pump begins to operate as step 1/5 is proceeded to step 2/5.

Result:

DTCs*	Test Results	Suspected Trouble Areas	Proceed To
—	EVAP pressure in step (b) between −4.85 kPa and −1.06 kPa (−36.38 mmHg and −7.95 mmHg)	Not yet determined	A
P043F and P2401	EVAP pressure in step (b) −1.06 kPa (−7.95 mmHg) or more	• 0.02 inch orifice high−flow • Vacuum pump stuck OFF	B
P043E	EVAP pressure in step (b) below −4.85 kPa (−36.38 mmHg)	0.02 inch orifice clogged	C
P2419	EVAP pressure in step (a) more than −1.06 kPa (−7.95 mmHg)	Vent valve stuck closed	D

*: The DTCs relating to the EVAP system displayed on a hand−held tester when checking.

B	**Go to step 11**
C	**Go to step 30**
D	**Go to step 19**

A

7	**Perform EVAP system step 2/5 to 3/5 check.**

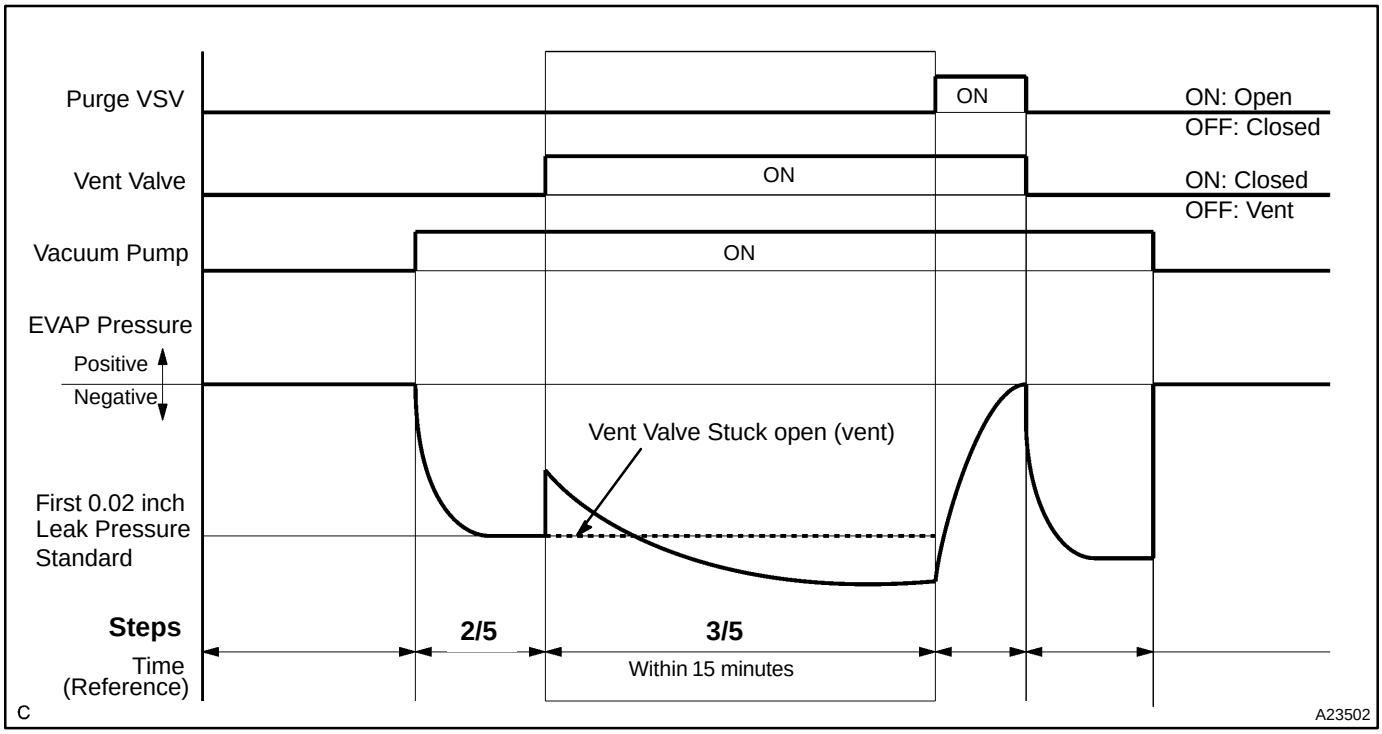

(a) Check the EVAP pressure increase in step 3/5.

Result:

DTCs*	Test Results	Suspected Trouble Areas	Proceed To
—	EVAP pressure increases by 0.3 kPa (2.25 mmHg) or more within 10 seconds of proceeding from step 2/5 to step 3/5	Not yet determined	A
P2420	No variation in EVAP pressure despite proceeding from step 2/5 to step 3/5	Vent valve stuck open (vent)	B
P0451	No variation in EVAP pressure during steps 1/5 through 3/5	Pressure sensor malfunction stuck	C

*: The DTCs relating to the EVAP system displayed on a hand−held tester when checking.

B	**Go to step 19.**
C	**Go to step 30.**

A

8	**Perform EVAP system step 3/5 check.**

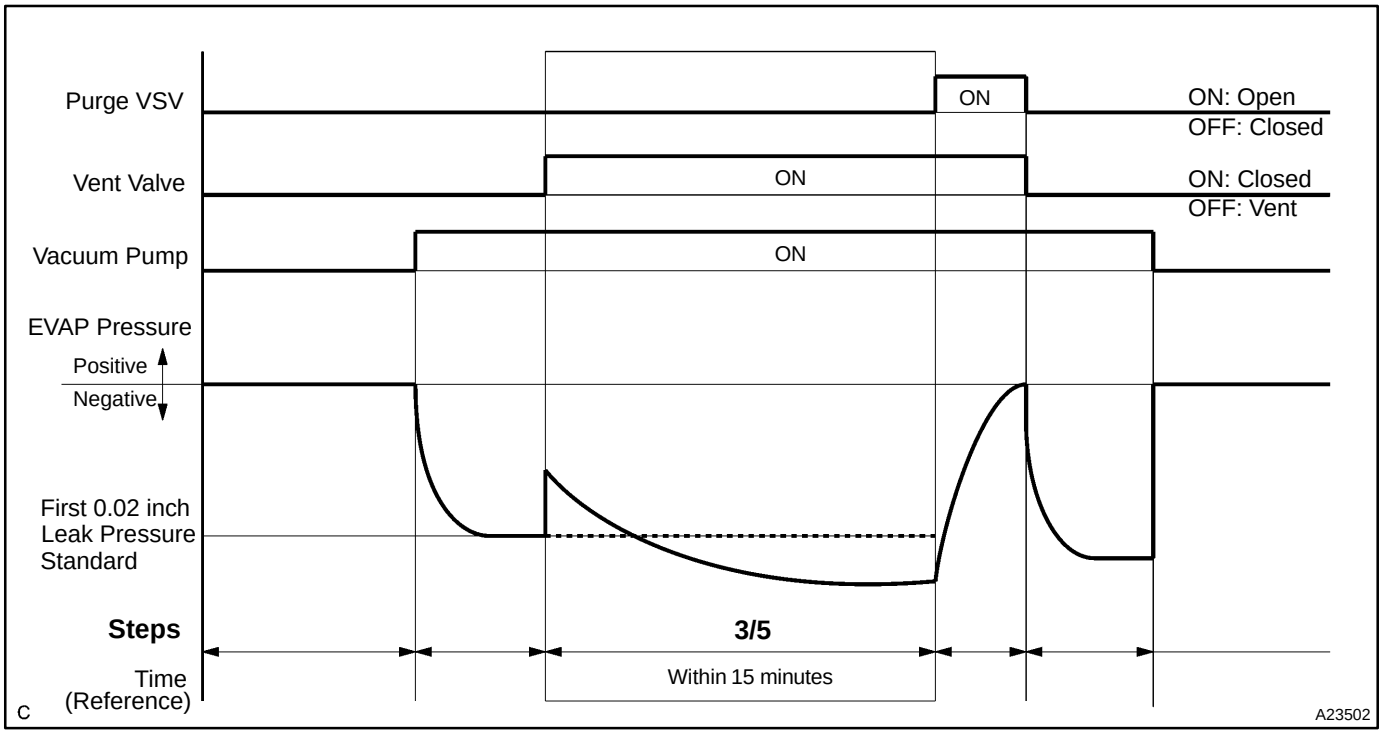

(a) Wait until the EVAP pressure change is less than 0.1 kPa (0.75 mmHg) for 30 seconds.

(b) Measure the EVAP pressure and record it.

HINT:

A few minutes are required for the EVAP pressure to become saturated. When there is little fuel in the fuel tank, it takes up to 12 minutes.

NEXT

9	Perform EVAP system step 4/5 check.

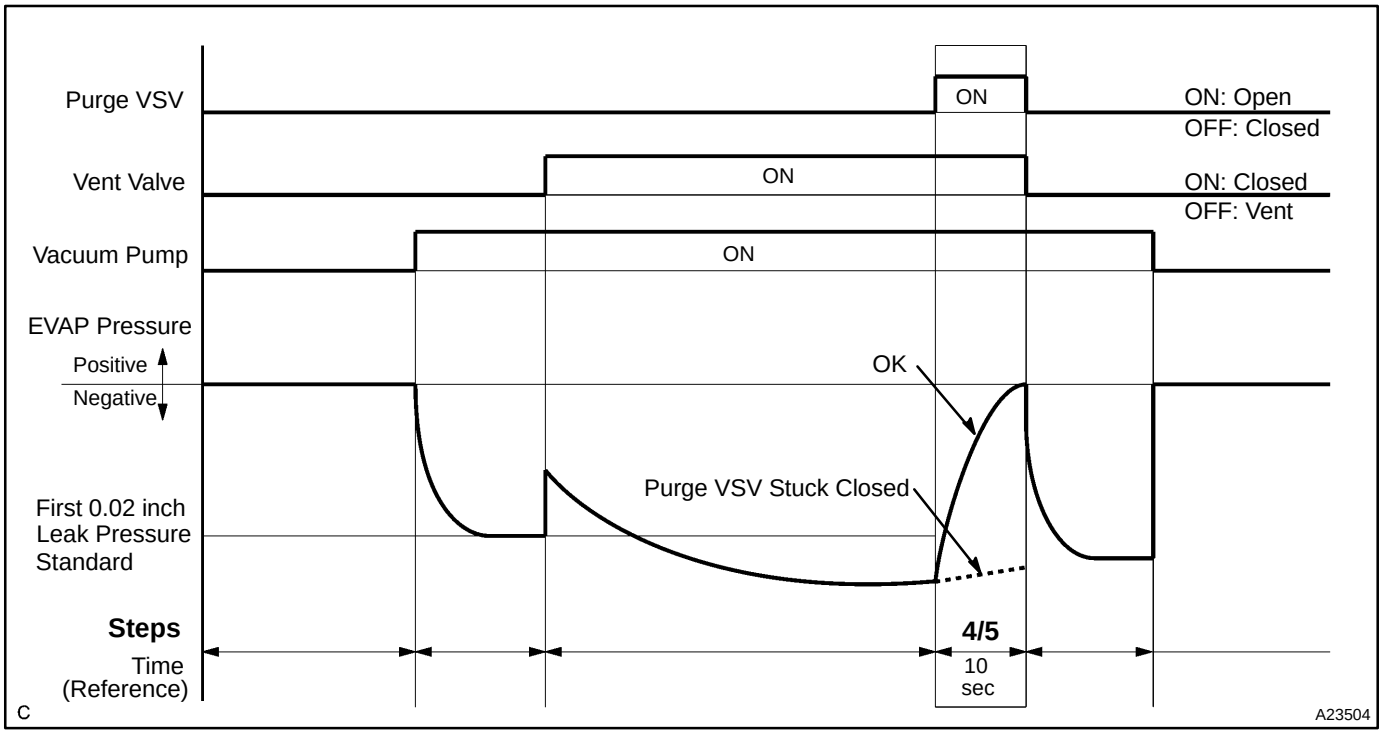

(a) Check the EVAP pressure in step 4/5.

DTCs*	Test Results	Suspected Trouble Areas	Proceed To
—	EVAP pressure increases by 0.3 kPa (2.25 mmHg) or more within 10 seconds of proceeding from step 3/5 to step 4/5	Not yet determined	A
P0441	EVAP pressure increases by 0.3 kPa (2.25 mmHg) or more within 10 seconds of proceeding from step 3/5 to step 4/5	Problems in EVAP hose between pure VSV and throttle body	B
P0441	Variation in EVAP pressure is less than 0.3 kPa (2.25 mmHg) for 10 seconds, after proceeding from step 3/5 to step 4/5	Purge VSV stuck closed	C

*: The DTCs relating to the EVAP system displayed on a hand−held tester when checking.

B	**Go to step 15.**
C	**Go to step 12.**

A

10	Perform EVAP system step 5/5 check.

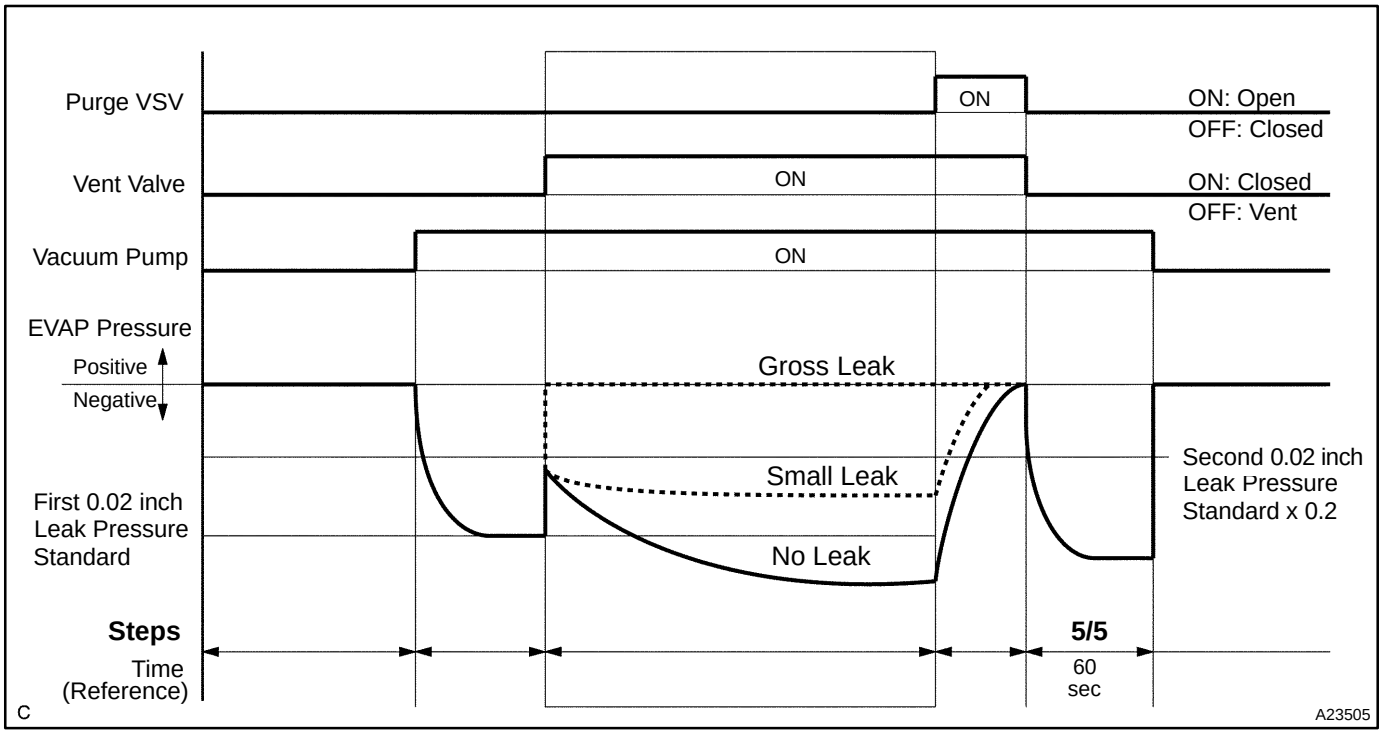

(a) Check the EVAP pressure in step 5/5.

(b) Compare the EVAP pressure in step 3/5 and the second 0.02 inch leak pressure standard (step 5/5).

Result:

DTCs*	Test Results	Suspected Trouble Areas	Proceed To
—	EVAP pressure (step 3/5) lower than the second 0.02 inch leak pressure standard (step 5/5)	Not yet determined (no leakage from EVAP system)	A
P0441 and P0455	EVAP pressure (step 3/5) higher than [second 0.02 inch leak pressure standard (step 5/5) x 0.2]	• Purge VSV stuck open • EVAP gross leak	B
P0456	EVAP pressure (step 3/5) higher than second 0.02 inch leak pressure standard (step 5/5)	EVAP small leak	B

*: The DTCs relating to the EVAP system displayed on a hand−held tester when checking.

A	**Go to step 36.**
B	**Go to step 12.**

11	**Perform EVAP system step 3/5 check.**

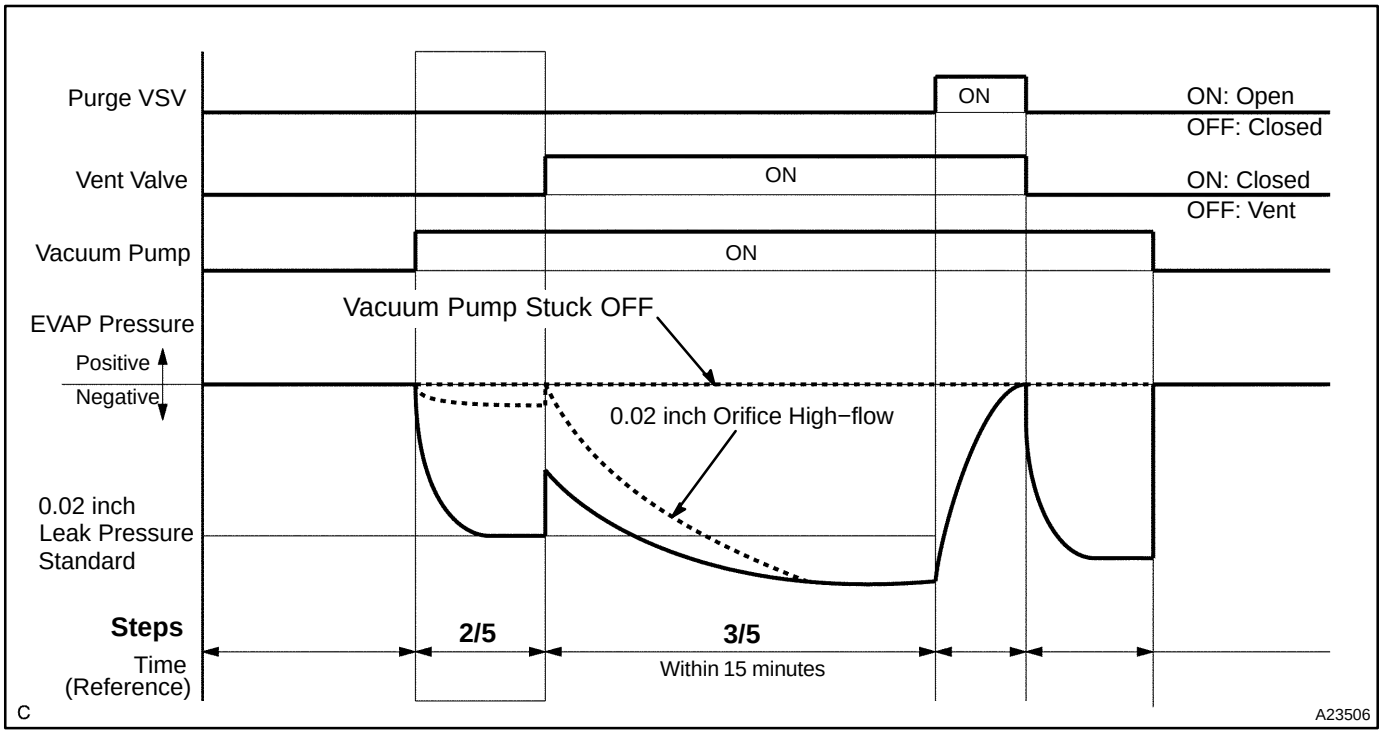

(a) Check the EVAP pressure in step 3/5.

Result:

DTCs*	Test Results	Suspected Trouble Areas	Proceed To
—	EVAP pressure less than [0.02 inch leak pressure standard x 0.2]	0.02 inch orifice high−flow	A
—	EVAP pressure more than [0.02 inch leak pressure standard x 0.2]	Vacuum pump stuck OFF	B

*: The DTCs relating to the EVAP system displayed on a hand−held tester when checking.

HINT:

The 0.02 inch leak pressure standard is the value determined in step 2/5.

A	**Go to step 30.**
B	**Go to step 23.**

12	Perform active test of purge VSV.

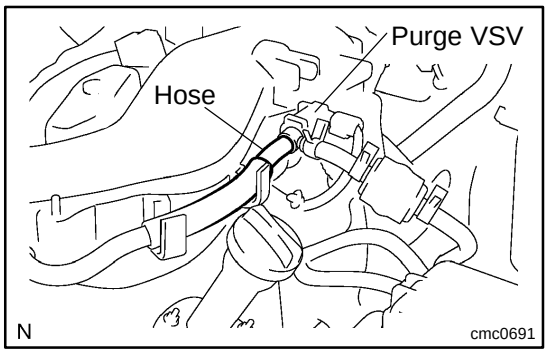

PREPARATION:

(a) On the hand−held tester, select the following menu items: DIAGNOSIS / ENHANCED OBD II/ ACTIVE TEST / EVAP VSV.
(b) Disconnect the hose (connected to the canister) from the purge VSV.
(c) Start the engine.

CHECK:

(a) On the tester, turn off the purge VSV (EVAP VSV: OFF).
(b) Use your finger to confirm that the purge VSV has no suction.
(c) Using the tester, turn on the purge VSV (EVAP VSV: ON).
(d) Use your finger to confirm that the purge VSV has suction.

RESULT:

Test Results	Suspected Trouble Areas	Proceed To
No suction when purge VSV turned OFF, and suction applied when tuned ON	Purge VSV normal	A
Suction applied when purge VSV turned OFF	Purge VSV stuck open	B
No suction when purge VSV turned ON	• Purge VSV stuck closed • Problems with EVAP hose between purge VSV and throttle body	C

B → **Go to step 14.**

C → **Go to step 15.**

A

13	Check fuel tank cap.

CHECK:

(a) Check that the fuel tank cap is correctly installed and confirm the fuel tank cap meets OEM specification.

HINT:

If an EVAP tester is available, check the fuel tank cap using the tester.

(1) Tighten the fuel tank cap.
(2) Remove the fuel tank cap and install it onto a fuel tank cap adaptor.
(3) Connect an EVAP tester pump hose to the adaptor, and pressurize to 3.2 to 3.7 kPa (24 to 28 mmHg) using an EVAP tester pump.
(4) Seal the adaptor and wait for 2 minutes.
(5) Check the pressure. If the pressure is 2 kPa (15 mmHg) or more, the fuel tank cap is normal.

PREPARATION:

Test Results	Suspected Trouble Areas	Proceed To
Fuel tank cap correctly installed	—	A
Fuel tank cap loose	• Fuel tank cap improperly installed • Defective fuel tank cap • Fuel tank cap does not meet OEM specifications	B
No fuel tank cap	—	C

A	**Go to step 29.**
B	**Go to step 27.**
C	**Go to step 28.**

14	Inspect EVAP VSV.

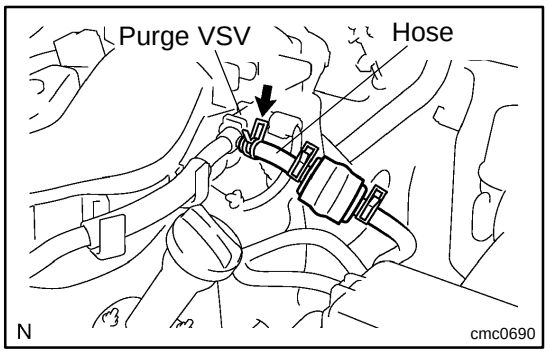

PREPARATION:

(a) Turn the ignition switch to OFF.
(b) Disconnect the V4 purge VSV connector.
(c) Disconnect the hose (connected to the canister) from the purge VSV.
(d) Start the engine.

CHECK:

Use your finger to confirm that the purge VSV has no suction.

RESULT:

Test Results	Suspected Trouble Areas	Proceed To
No suction	ECM	A
Suction applied	Purge VSV	B

A	Go to step 34.

B	Go to step 30.

15	Check EVAP hose between purge VSV and throttle body.

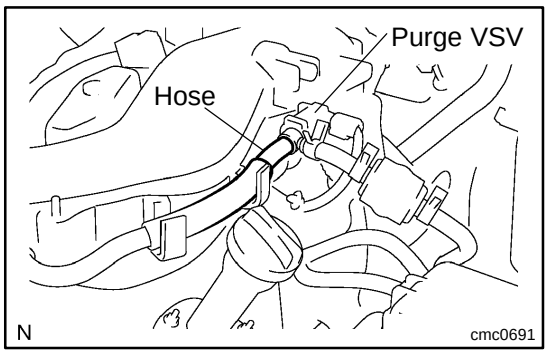

PREPARATION:

(a) Disconnect the hose (connected to the throttle body) from the purge VSV.
(b) Start the engine.

CHECK:

(a) Use your finger to confirm that the hose has suction.

RESULT:

Test Results	Suspected Trouble Areas	Proceed To
Suction applied	EVAP hose between purge VSV and throttle body normal	A
No suction	• Throttle body • EVAP hose between purge VSV and throttle body	B

B	Go to step 26.

A

16	Inspect EVAP VSV.

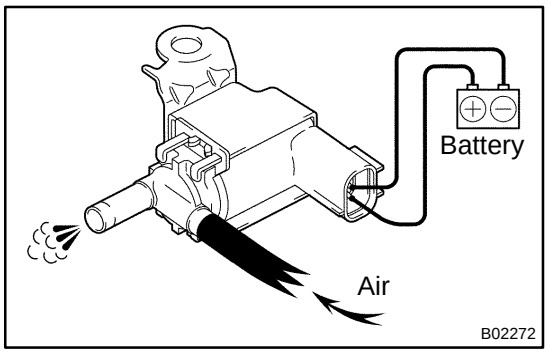

PREPARATION:

(a) Remove the purge VSV.

(b) Apply battery voltage to the terminals of the purge VSV.

CHECK:

Using an air gun, confirm that air flows from port A to port B.

RESULT:

Test Results	Suspected Trouble Areas	Proceed To
Suction applied	EVAP hose between purge VSV and throttle body normal	A
No suction	• Throttle body • EVAP hose between purge VSV and throttle body	B

B → **Go to step 31.**

A

17	Measure purge VSV terminal voltage.

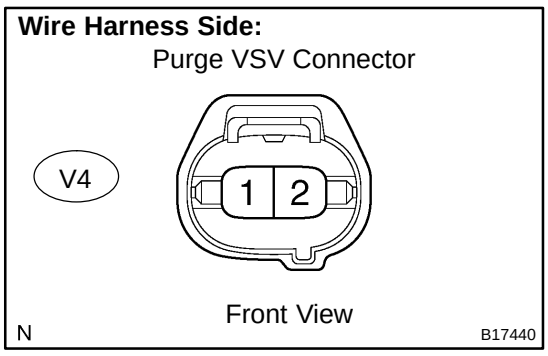

PREPARATION:

(a) Disconnect the V4 purge VSV connector.

(b) Turn the ignition switch to ON.

CHECK:

(a) Measure the voltage between terminal 1 of the purge VSV connector and the body ground.

RESULT:

Test Results	Suspected Trouble Areas	Proceed To
Between 11 V and 14 V	Normal	A
Other than result above	Wire harness or connectors between purge VSV and ECM	B

B → **Go to step 32.**

A

18	**Check for open and short circuit in harness and connector between purge VSV and ECM.**

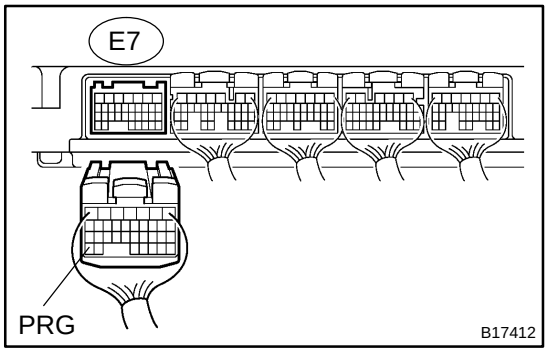

PREPARATION:

Disconnect the E7 ECM connector and the V4 purge VSV connector.

CHECK:

Check the resistance.

OK:

Standard:

Tester Connections	Specified Conditions
E7−34 (PRG) − V4−1	Below 1 Ω
E7−34 (PRG) − Body ground	10 kΩ or higher
V4−1 − Body ground	10 kΩ or higher

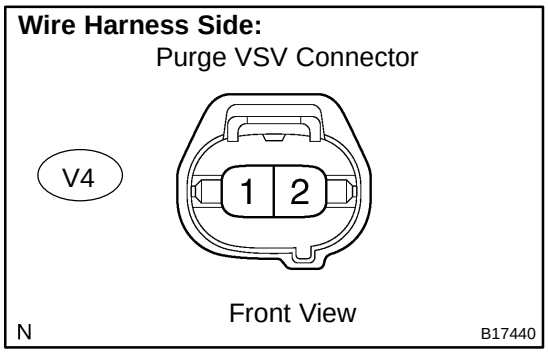

OK	**Go to step 35.**

NG	**Go to step 32.**

19	**Perform active test for vent valve.**

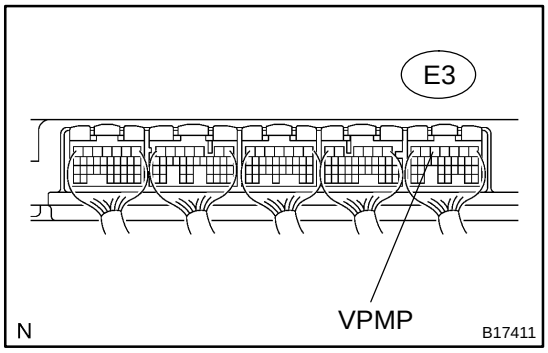

PREPARATION:

(a) Turn the ignition switch to ON.

(b) On the hand−held tester, select the following menu items: DIAGNOSIS/ ENHANCED OBD II/ ACTIVE TEST/ VENT VALVE (ALONE).

CHECK:

Measure the voltage between terminal VPMP of the ECM connector and the body ground when the vent valve is turned ON (close) and OFF (vent) using the tester.

RESULT:

Test Results	Suspected Trouble Areas	Proceed To
Between 9 V and 14 V when OFF Below 3 V when ON	Vent valve	A
Below 3 V when OFF and ON	ECM	B

A	**Go to step 22.**

B	**Go to step 35.**

20	Perform active test for vent valve.

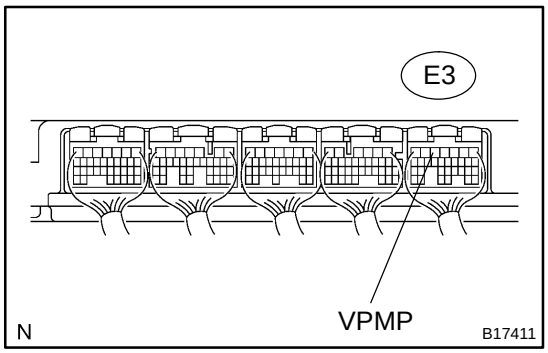

PREPARATION:

(a) Turn the ignition switch to ON.

(b) On the hand−held tester, select the following menu items: DIAGNOSIS/ ENHANCED OBD II/ ACTIVE TEST/ VENT VALVE (ALONE).

CHECK:

Measure the voltage between terminal VPMP of the ECM connector and the body ground when the vent valve is turned ON (close) and OFF (vent) using the tester.

RESULT:

Test Results	Suspected Trouble Areas	Proceed To
Below 3 V when OFF and ON	Power source of vent valve	A
Between 9 V and 14 V when OFF Below 3 V when ON	Vent valve	B
Between 9 V and 14 V when OFF and ON	ECM	C

B → **Go to step 24.**

C → **Go to step 35.**

A

21	Inspect pump module power source circuit.

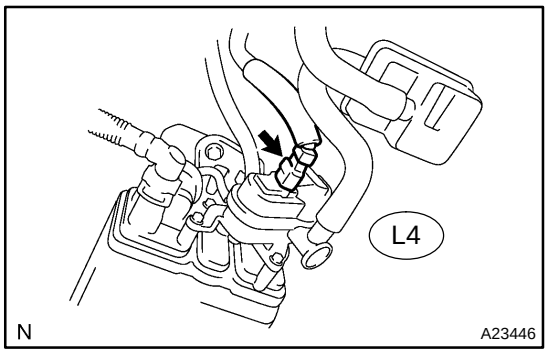

PREPARATION:

(a) Turn the ignition switch to OFF.
(b) Disconnect the L4 canister connector.
(c) Turn the ignition switch to ON.

CHECK:

Measure the voltage between terminal 9 of the canister connector and the body ground.

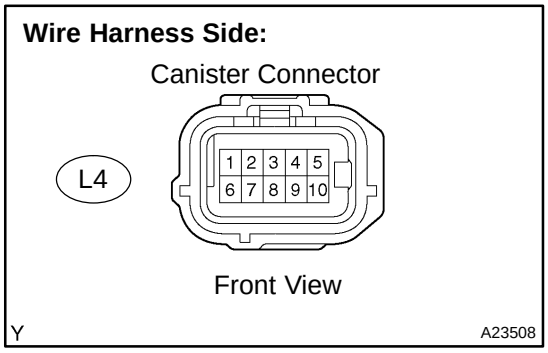

RESULT:

Test Results	Suspected Trouble Areas	Proceed To
Between 9 V and 14 V	Normal	A
Between 0 V and 3 V	Power source wire harness of vent valve	B

B → **Go to step 32.**

A

22	Inspect vent valve operation of pump module.

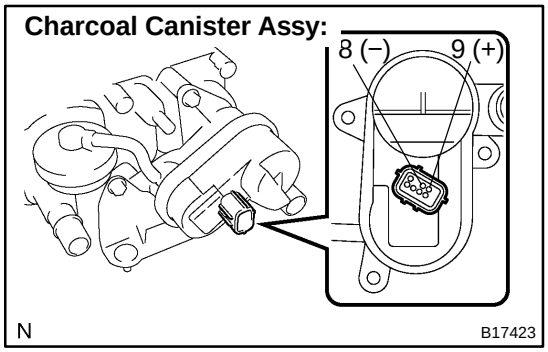

PREPARATION:

(a) Disconnect the L4 canister connector.
(b) Turn the ignition switch to OFF.
(c) Apply the battery voltage to terminals 9 and 8 of the pump module.

CHECK:

Touch the pump module to confirm the vent valve operation.

RESULT:

Test Results	Suspected Trouble Areas	Proceed To
Operating	Wire harness between vent valve and ECM	A
Not operating	Vent valve	B

A	Go to step 32.
B	Go to step 30.

23	Perform active test for vacuum pump.

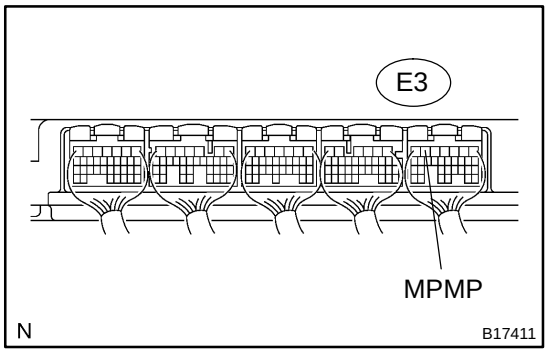

PREPARATION:

On the hand−held tester, select the following menu items: DIAGNOSIS / ENHANCED OBD II / ACTIVE TEST / VACUUM PUMP (ALONE).

CHECK:

Measure the voltage between terminal MPMP of the ECM connector and the body ground when the vacuum pump is turned ON and OFF using the tester.

Result:

Tests Results	Suspected Trouble Areas	Proceed To
Between 0 V and 3 V when OFF Between 9 V and 14 V when ON	ECM normal	A
Between 9 V and 14 V when OFF Between 0 V and 3 V when ON	ECM	B

B	Go to step 35.

A

24	Check for open and short circuit in harness and connector between pump module and ECM.

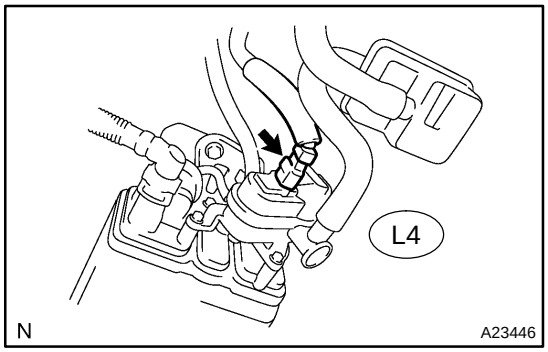

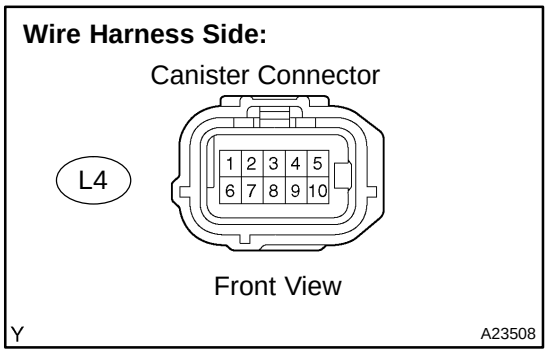

PREPARATION:

(a) Turn the ignition switch to OFF.
(b) Disconnect the L4 canister connector.
(c) Turn the ignition switch to ON.
(d) On the hand−held tester, select the following menu items:DIAGNOSIS / ENHANCED OBD II / ACTIVE TEST / VACUUM PUMP (ALONE).
(e) Turn the vacuum pump ON.

CHECK:

Measure the voltage between terminal 1 of the canister connector and the body ground.

RESULT:

Test Results	Suspected Trouble Areas	Proceed To
Between 9 V and 14 V	Normal	A
Between 0 V and 3 V	Wire harness between ECM and vacuum pump	B

B → **Go to step 32.**

A

25	Check for open and short in harness and connector between pump module and ECM.

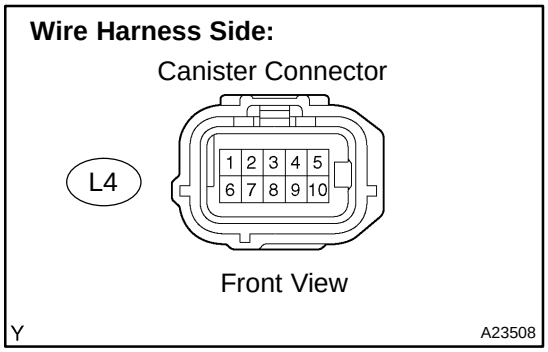

PREPARATION:

(a) Disconnect the L4 canister connector.
(b) Turn the ignition switch to OFF.

CHECK:

Check the resistance between terminal 6 of the canister connector and the body ground.

RESULT:

Test Results	Suspected Trouble Areas	Proceed To
Below 1 Ω	Vacuum pump	A
10 kΩ or more	Wire harness between vacuum pump and body ground	B

A	Go to step 30.
B	Go to step 32.

26	Inspect throttle body.

PREPARATION:

(a) Stop the engine.
(b) Disconnect the EVAP hose from the throttle body.
(c) Start the engine.

CHECK:

(a) Use your finger to confirm that the port of the throttle body has suction.

RESULT:

Test Results	Suspected Trouble Areas	Proceed To
Suction applied	EVAP hose between throttle body and purge VSV	A
No suction	Throttle body	B

A	Go to step 33.
B	Go to step 34.

27	**Correctly reinstall or replace fuel tank cap.**

HINT:

- When reinstalling the fuel tank cap, tighten it until a few click sounds are heard.
- When replacing the fuel tank cap, use a fuel tank cap that meets OEM specifications, and install it until a few click sounds are heard.

NEXT	**Go to step 37.**

28	**Replace fuel tank cap.**

HINT:

When installing the fuel tank cap, tighten it until a few click sounds are heard.

NEXT	**Go to step 37.**

29	**Locate EVAP leak.**

(a) Disconnect the vent hose.

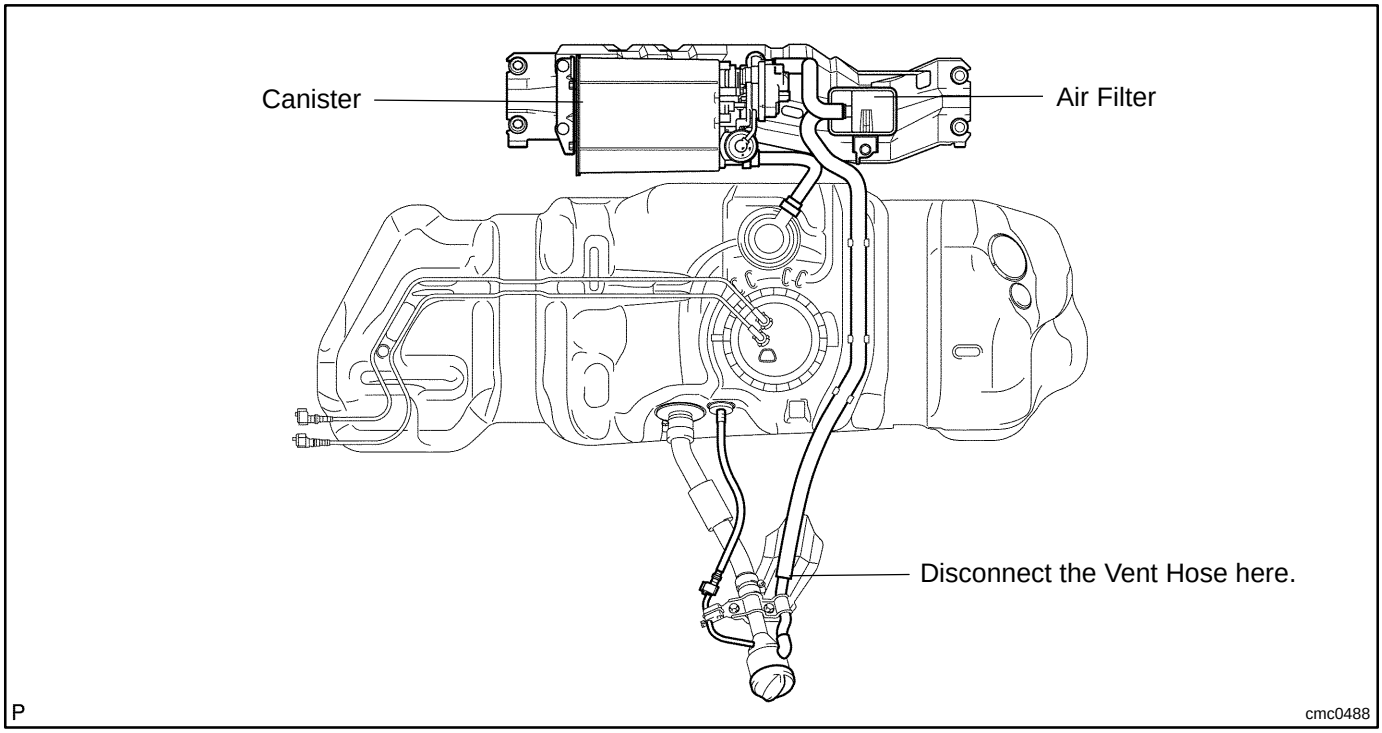

(b) Connect the EVAP pressure tester tool to the canister with the adapter.

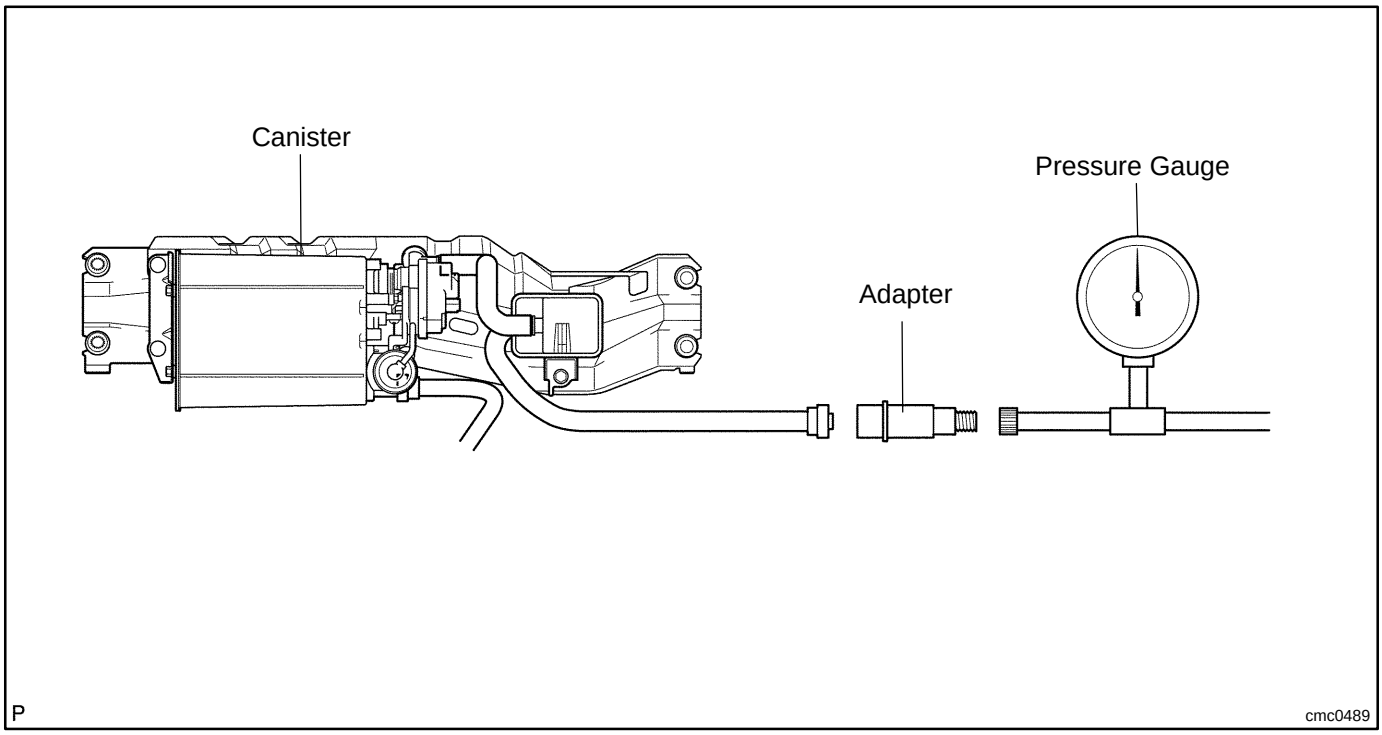

(c) Pressurize the EVAP system by 3.2 to 3.7 kPa (24 to 28 mmHg).
(d) Apply soapy water to the piping and the connecting parts of the EVAP system.
(e) Look for areas where bubbles appear. This indicates leak point.
(f) Repair or replace the leak point.

NEXT	**Go to step 37.**

30	**Replace charcoal canister.**

NEXT	**Go to step 37.**

31	**Replace EVAP VSV.**

(a) Disconnect the connector and the hoses from the purge VSV.
(b) Remove the purge VSV.
(c) Install a new purge VSV.
(d) Reconnect the connector and hoses.

NEXT	**Go to step 37.**

32	**Repair or replace wire harness or connector.**

NEXT	**Go to step 37.**

33	**Replace EVAP hose between EVAP VSV and throttle body.**

NEXT → **Go to step 37.**

34	**Inspect throttle body.**

(a) Remove the throttle body (see page SF−40).
(b) Check that the EVAP purge port of the throttle body is not clogged. If necessary, replace the throttle body.

NEXT → **Go to step 37.**

35	**Replace ECM (See page SF−66)**

NEXT → **Go to step 37.**

36	**Repair or replace parts and components indicated by output DTCs.**

(a) Repair the malfunctioning areas indicated by the DTCs that had been confirmed when the vehicle was brought in.

NEXT → **Go to step 37.**

37	**Perform EVAP system auto operation check.**

NOTICE:

- **In the EVAP SYSTEM CHECK (AUTO OPERATION), the series of 4 EVAP SYSTEM CHECK steps is performed automatically by the hand−held tester. It takes a maximum of approximately 15 minutes.**
- **Do not perform the EVAP SYSTEM CHECK when the fuel tank is more than 90 % full because the cut−off valve may be closed and making the leak check of the fuel tank unavailable.**
- **Do not run the engine in this step.**
- **When the temperature of the fuel is 35°C (95°F) or more, a large amount of vapor forms and any check results become inaccurate. When performing an EVAP SYSTEM CHECK, keep the temperature below 35°C (95°F).**

(a) Clear DTCs (see page DI−42).
(b) On the hand−held tester, select the following menu items: DIAGNOSIS / ENHANCED OBD II / SYSTEM CHECK / EVAP SYS CHECK / AUTO OPERATION.
(c) After the SYSTEM CHECK is completed, check for pending DTCs by selecting the following menu items: DIAGNOSIS / ENHANCED OBD II / DTC INFO / PENDING CODES.

HINT:
If no pending DTC is found, the repair has been successfully completed.

NEXT

Completed

Monitor Confirmation

HINT:

After a repair, check Monitor Status by performing the Key−Off Monitor Confirmation and Purge Flow Monitor Confirmation described below.

1. KEY−OFF MONITOR CONFIRMATION

(a) Preconditions

The monitor will not run unless:

- The vehicle has been driven for 10 minutes or more (in a city area or on a free way)
- The fuel tank is less than 90 % full
- The altitude is less than 8,000 ft (2,400 m)
- The Engine Coolant Temperature (ECT) is between 4.4°C and 35°C (40°F and 95°F)
- The Intake Air Temperature (IAT) is between 4.4°C and 35°C (40°F and 95°F)
- The vehicle remains stationary (the vehicle speed is 0 mph [0 km/h])

(b) Monitor Conditions

(1) Allow the engine to idle for at least 5 minutes.

(2) Turn the ignition switch to OFF and wait for 6 hours (8 or 10.5 hours).

HINT:

Do not start the engine until checking MONITOR STATUS. If the engine is started, the steps described above must be repeated.

(c) Monitor Status

(1) Connect a hand−held tester to the DLC3.

(2) Turn the ignition switch to ON and turn the tester ON.

(3) On the tester, select the following menu items: DIAGNOSIS / ENHANCED OBD II / MONITOR STATUS.

(4) Check the Monitor Status displayed on the tester.

HINT:

If INCMP is displayed, the monitor is not completed. Make sure that the preconditions have been met, and perform the Monitor Conditions again.

2. PURGE FLOW MONITOR CONFIRMATION (P0441)

HINT:

Perform this monitor confirmation after the Key−Off Monitor Confirmation shows COMPL (complete).

(a) Preconditions

The monitor will not run unless:

- The vehicle has been driven for 10 minutes or more (in a city area or on a free way)
- The ECT is between 4.4°C and 35°C (40°F and 95°F)
- The IAT is between 4.4°C and 35°C (40°F and 95°F)

(b) Monitor Conditions

(1) Release the pressure from the fuel tank by removing and reinstalling the fuel tank cap.

(2) Warm the engine up until the ECT reaches more than 75°C (167°F).

(3) Increase the engine speed to 3,000 rpm once.

(4) Allow the engine to idle and turn A/C ON for 1 minute.

(c) Monitor Status
(1) Turn the ignition switch to OFF (where ON or the engine is running).
(2) Connect a hand−held tester to the DLC3.
(3) Turn the ignition switch to ON and turn the tester ON.
(4) On the tester, select the following menu items: DIAGNOSIS / ENHANCED OBD II / MONITOR STATUS.
(5) Check the Monitor Status displayed on the tester.

HINT:
If INCMP is displayed, the monitor is not completed. Make sure that the preconditions have been met, and perform the Monitor Conditions again.

MONITOR RESULT

Refer to page DI−26 for detailed information.
The test value and test limit information are described as shown in the following table. Check the monitor result and test values after performing the monitor drive pattern (refer to ”Confirmation Monitor”).

- MID (Monitor Identification Data) is assigned to each emissions−related component.
- TID (Test Identification Data) is assigned to each test value.
- Scaling is used to calculate the test value indicated on generic OBD ll scan tools.

EVAP−Key−off monitor

MID	TID	Scaling	Description of Test Value	Minimum Test Limit	Maximum Test Limit
$3D	$C9	Multiply by 0.01 (kPa)	Test value for small leak (P0456): Refer to pressure D*.	Minimum test limit for small leak	Maximum test limit for small leak
$3D	$CA	Multiply by 0.01 (kPa)	Test value for gross leak (P0455): Refer to pressure E*.	Minimum test limit for gross leak	Maximum test limit for gross leak
$3D	$CB	Multiply by 0.01 (kPa)	Test value for vacuum pump stuck OFF (P2401): Refer to pressure A*.	Minimum test limit for vacuum pump stuck OFF	Maximum test limit for vacuum pump stuck OFF
$3D	$CD	Multiply by 0.01 (kPa)	Test value for vacuum pump stuck ON (P2402): Refer to pressure A*.	Minimum test limit for vacuum pump stuck ON	Maximum test limit for vacuum pump stuck ON
$3D	$CE	Multiply by 0.01 (kPa)	Test value for vent valve stuck OFF (vent) (P2420): Refer to pressure C*.	Minimum test limit for vent valve stuck ON	Maximum test limit for vent valve stuck ON
$3D	$CF	Multiply by 0.01 (kPa)	Test value for vent valve stuck ON (closed) (P2419): Refer to pressure A*.	Minimum test limit for vent valve stuck OFF	Maximum test limit for vent valve stuck OFF
$3D	$D0	Multiply by 0.01 (kPa)	Test value for 0.02 inch orifice low flow (P043E): Refer to pressure B*.	Minimum test limit for 0.02 inch orifice low flow	Maximum test limit for 0.02 inch orifice low flow
$3D	$D1	Multiply by 0.01 (kPa)	Test value for 0.02 inch orifice high flow (P043F): Refer to pressure A*.	Minimum test limit for 0.02 inch orifice high flow	Maximum test limit for 0.02 inch orifice high flow
$3D	$D4	Multiply by 0.01 (kPa)	Test value for purge VSV stuck close (P0441): Refer to pressure F*.	Minimum test limit for purge VSV stuck close	Maximum test limit for purge VSV stuck close
$3D	$D5	Multiply by 0.01 (kPa)	Test value for purge VSV stuck open (P0441): Refer to pressure E*.	Minimum test limit for purge VSV stuck open	Maximum test limit for purge VSV stuck open
$3D	$D7	Multiply by 0.01 (kPa)	Test value for purge flow (P0441): Refer to pressure G*.	Minimum test limit for purge flow	Maximum test limit for purge flow

* Pressure A to G are indicated as shown in the diagram below.

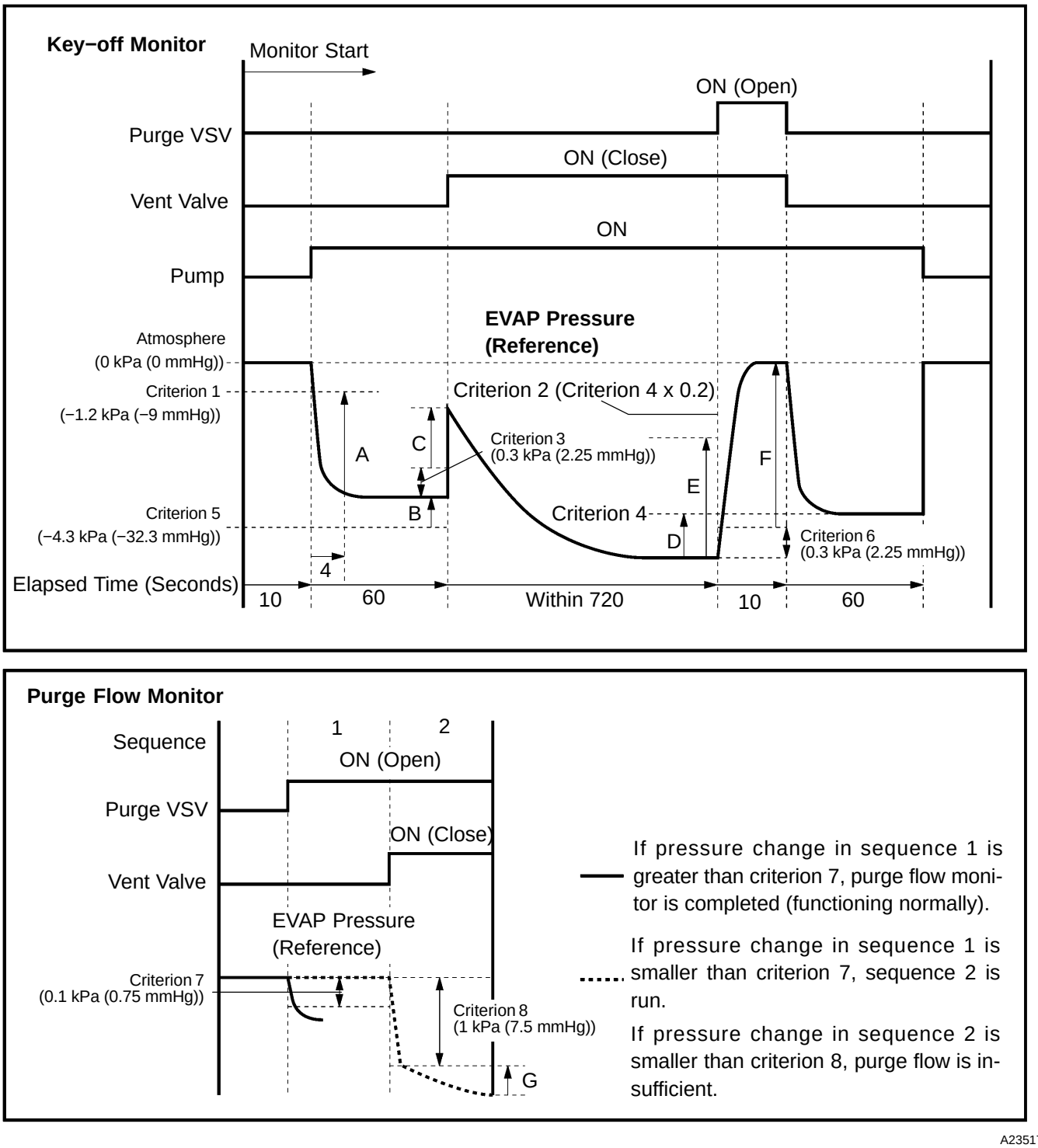
Key−off Monitor
Monitor Start
ON (Open)
Purge VSV
ON (Close)
Vent Valve
ON
Pump
EVAP Pressure
(Reference)
Atmosphere
(0 kPa (0 mmHg))
Criterion 1
(−1.2 kPa (−9 mmHg))
Criterion 2 (Criterion 4 x 0.2)
A
C
Criterion 3
(0.3 kPa (2.25 mmHg))
F
E
Criterion 5
(−4.3 kPa (−32.3 mmHg))
B
Criterion 4
D
Criterion 6
(0.3 kPa (2.25 mmHg))
4
Elapsed Time (Seconds)
10
60
Within 720
10
60
Purge Flow Monitor
Sequence
1
2
ON (Open)
Purge VSV
ON (Close)
Vent Valve
EVAP Pressure
(Reference)
Criterion 7
(0.1 kPa (0.75 mmHg))
Criterion 8
(1 kPa (7.5 mmHg))
G
If pressure change in sequence 1 is greater than criterion 7, purge flow monitor is completed (functioning normally).
If pressure change in sequence 1 is smaller than criterion 7, sequence 2 is run.
If pressure change in sequence 2 is smaller than criterion 8, purge flow is insufficient.

C

A23517

DIDUF−01

Fuel Pump Control Circuit

CIRCUIT DESCRIPTION

Refer to DTC P0230 on page DI−174.

WIRING DIAGRAM

Refer to DTC P0230 on page DI−174.

INSPECTION PROCEDURE

1	**Check fuel pump operation (See page SF−5).**

OK → **Go to step 8.**

NG

2	**Connect hand−held tester, and check operation of fuel pump relay.**

PREPARATION:

(a) Connect the hand−held tester to the DLC3.
(b) Turn the ignition switch to ON and push the hand−held tester main switch ON.
(c) Enter the following menu: DIAGNOSIS / ENHANCED OBD II / ACTIVE TEST / FUEL PUMP / SPD.

CHECK:

Check the operation of the fuel pump relay when it is switched ON and OFF by the hand−held tester.

OK:

Operating noise can be heard from the fuel pump relay.

OK → **Go to step 4.**

NG

3	Check fuel pump relay.

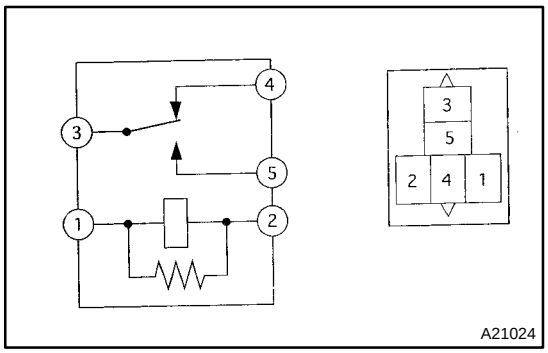

PREPARATION:
Remove the fuel pump relay from the engine room R/B.
CHECK:
Inspect the fuel pump relay.
OK:

Terminal No.	Condition	Specified Condition
3 − 4	Apply B+ between terminals 1 and 2	10 KΩ or higher
3 − 4	Always	Below 1 Ω
3 − 5	Always	10 KΩ or higher
3 − 5	Apply B+ between terminals 1 and 2	Below 1 Ω

NG → **Replace fuel pump relay.**

OK

4	Check fuel pump (See page SF−13).

NG → **Repair or replace fuel pump.**

OK

5	Check circuit opening relay.

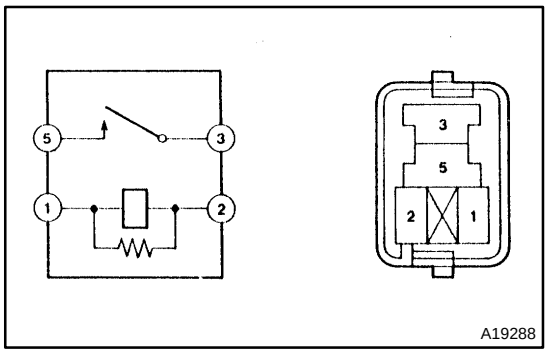

PREPARATION:
Remove the C/OPN relay from the engine room J/B.
CHECK:
Inspect the C/OPN relay.
OK:

Standard:

Terminal No.	Condition	Specified Condition
3 − 5	Always	10 KΩ or higher
3 − 5	Apply B+ between terminals 1 and 2	Below 1 Ω

NG → **Replace circuit opening relay.**

OK

6	**Check for open in harness and connector between EFI relay and fuel pump, and fuel pump and body ground (See page IN−30).**

NG → **Repair or replace harness or connector.**

OK

7	**Check voltage between terminal FC and E1 of ECM connector.**

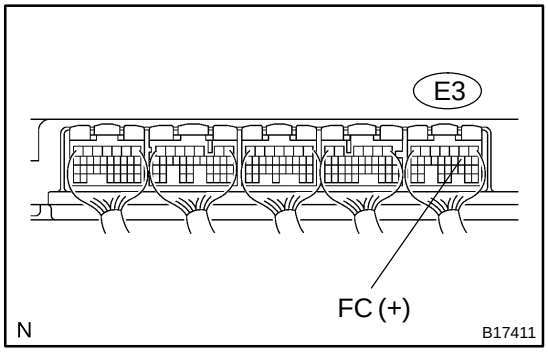

PREPARATION:
Turn the ignition switch to ON.
CHECK:
Measure the voltage between terminal FC of the ECM connector and body ground.
OK:

Voltage: 9 to 14 V

NG → **Check for open in harness and connector between battery and FC terminal of ECM (See page SF−66).**

OK

Proceed to problem symptoms table (See page DI−33).

8	**Check fuel pump resistor (See page SF−57).**

NG → **Replace fuel pump resistor.**

OK

Check and repair harness and connector between fuel pump relay and fuel pump resistor, and fuel pump resistor and fuel pump (See page IN−30).

DIDUG−01

MIL Circuit

CIRCUIT DESCRIPTION

If the ECM detects a trouble, the MIL lights up. At this time, the ECM records a DTC in the memory.

WIRING DIAGRAM

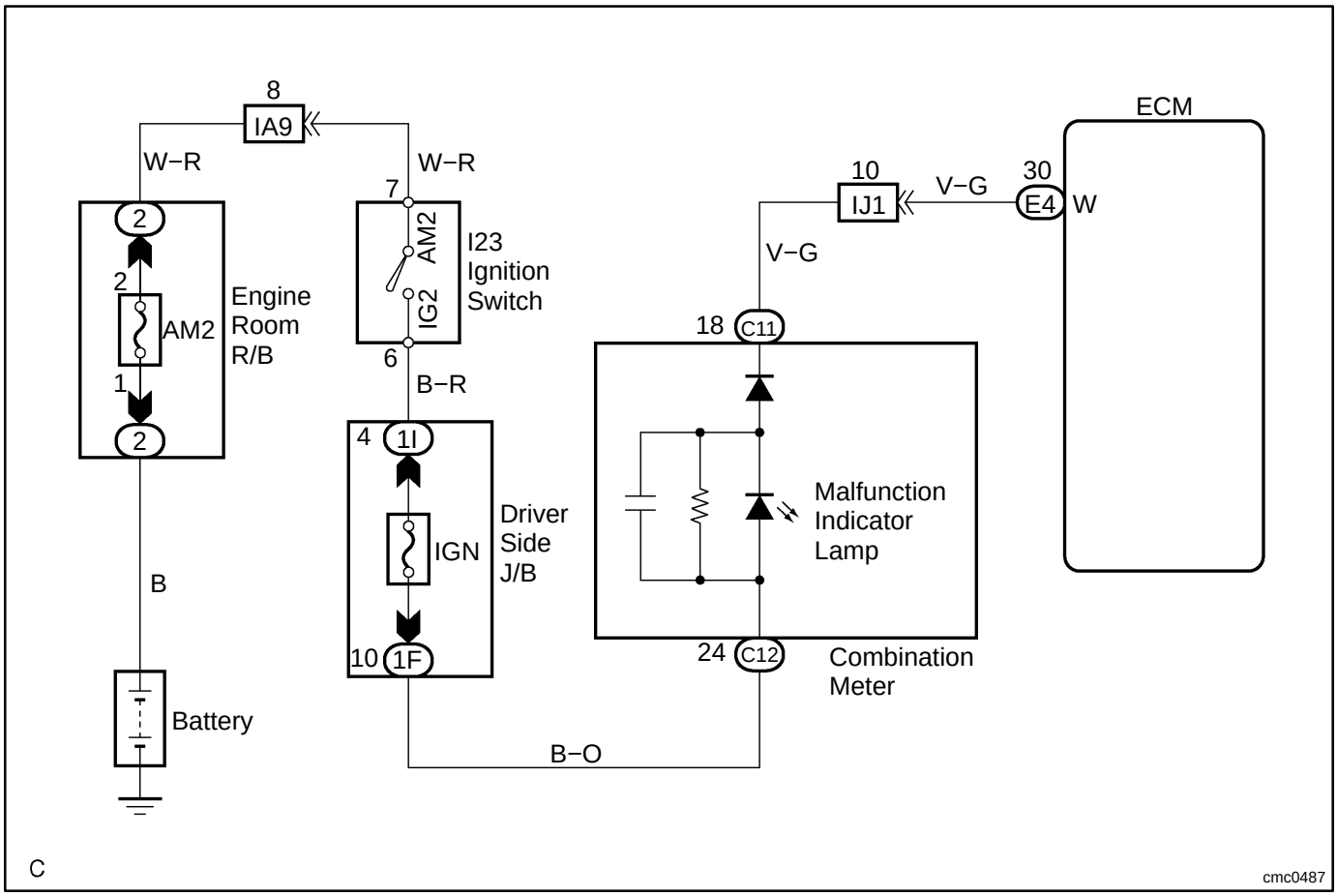

INSPECTION PROCEDURE

HINT:

Troubleshoot each trouble symptom in accordance with the chart below.

MIL remains on	Start inspection from step 1
MIL does not light up	Start inspection from step 3

1 Clear DTC.

PREPARATION:

(a) Connect the hand−held tester to the DLC3.
(b) Turn the ignition switch to ON and push the hand−held tester main switch ON.
(c) Read the DTC (See page DI−42).
(d) Clear the DTC (See page DI−42).

CHECK:

(a) Check for DTCs.

OK:

DTC is not output.

NG → **Repair circuit indicated by output code (See page DI−57).**

OK

2 Check Harness and connector (Check for short in wire harness).

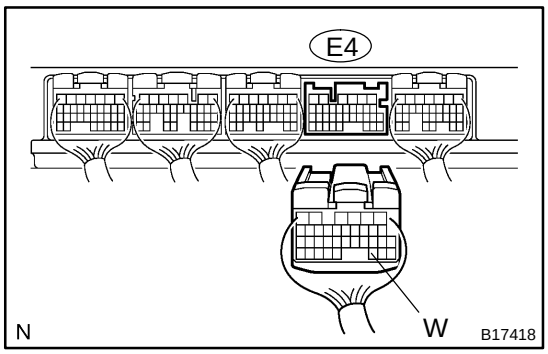

PREPARATION:

(a) Disconnect the E4 ECM connector.
(b) Turn the ignition switch ON.

CHECK:

Check that MIL goes off.

OK:

MIL goes off.

OK → **Replace ECM (See page SF−66).**

NG

Check and repair harness and connector between combination meter and ECM.

3	**Check that MIL lights up.**

CHECK:

Check that MIL lights up when turning the ignition switch to ON.

OK:

MIL lights up (Engine stopped)

OK → **System OK.**

NG

4	**Inspect combination meter assy (MIL circuit).**

See the combination meter troubleshooting on page BE−86.

NG → **Repair or replace bulb or combination meter assembly.**

OK

Check and repair harness and connector between combination meter and ECM.

DIDUB−01

DTC	P2A00	A/F Sensor Circuit Slow Response (Bank 1 Sensor 1)

DTC	P2A03	A/F Sensor Circuit Slow Response (Bank 2 Sensor 1)

CIRCUIT DESCRIPTION

Refer to DTC P2195 on page DI−312.

DTC No.	DTC Detection Conditions	Trouble Areas
P2A00 P2A03	Calculated test value for A/F sensor response rate deterioration level is less than threshold.	• Open or short in A/F sensor (sensor 1) circuit • A/F sensor (sensor 1) • ECM

MONITOR DESCRIPTION

After engine is warmed up, the ECM performs air−fuel ratio feedback control to regulate the air−fuel ratio at stoichiomentric ratio. In addition, this vehicle performs Active A/F Ratio Control for approximately 10 seconds after preconditions met in order to measure the A/F sensor response rate. During active air−fuel ratio control, the ECM forcibly increases and decreases the injection volume for certain amount based on learned stoichiomentric air −fuel ratio during usual air−fuel feedback control, and measures the A/F sensor response rate. The ECM calculates the signal from the A/F sensor while value for A/F sensor response rate deterioration level.

If the test value for A/F sensor response rate deterioration level is less than threshold, ECM interprets this as a malfunction, and sets the DTC.

Air−fuel Ratio Sensor Output:

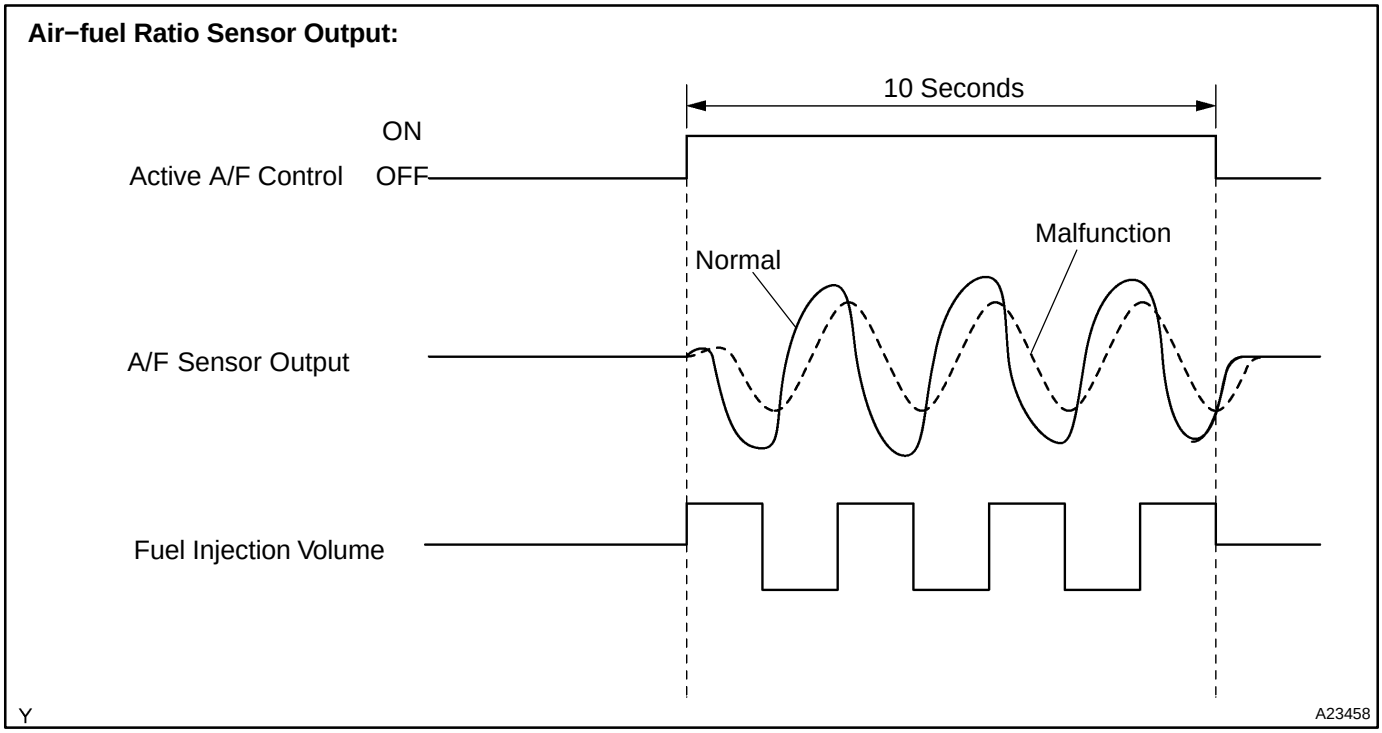

CONFIRMATION DRIVING PATTERN

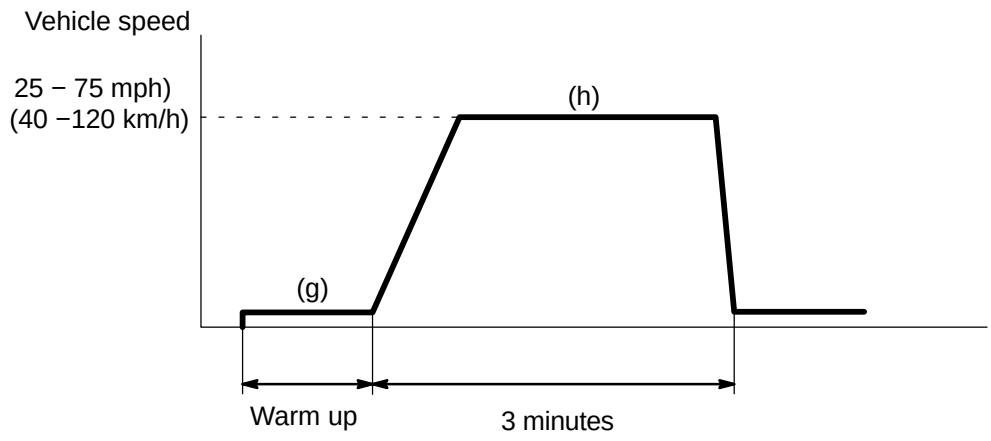

(a) Connect the hand−held tester to the DLC3.
(b) Turn the ignition switch to ON.
(c) Turn the hand−held tester ON.
(d) Clear DTCs.
(e) Select the following menu items: DIAGNOSIS/ENHANCED OBD II/MONITOR INFO/MONITOR RESULT.
(f) Check that RES RATE B1 S1 is INCOMPL.
(g) Start the engine and warm it up.
(h) Drive the vehicle at between 25 mph and 75 mph (40 km/h and 120km/h) for 3 minutes. However, the vehicle should be driven at constant−speed.
(i) When detection is complete, Response rate of MONITOR RESULT changes.

If the value does not change, perform step (h) once more.

(j) Notes the value of the Monitor Result.
(k) Select the following menu items: DIAGNOSIS/ENHANCED OBD II/DTC INFO/ PENDING CODES.
(l) Check if any DTCs (any pending DTCs) are set.

MONITOR STRATEGY

Related DTCs	P2A00	A/F sensor (Bank 1) slow response
	P2A03	A/F sensor (Bank 2) slow response
Required sensors/components	A/F sensor	
Frequency of operation	Once per driving cycle	
Duration	10 to 15 sec.	
MIL operation	2 driving cycles	
Sequence of operation	None	

TYPICAL ENABLING CONDITIONS

Item	Specification	
	Minimum	Maximum
The monitor will run whenever these DTCs are not present	See page DI−18	
Active A/F control is performed when the following conditions are set	−	
Battery voltage	11 V	−
ECT	75°C (167°F)	−
Idle	OFF	
Engine RPM	−	4,000 rpm
A/F sensor status	Activated	
Fuel cut	OFF	
Engine load	10 to 70%	
Shift position	2nd	−
Catalyst monitor	Not yet	
MAF	3 to 10.5 g/sec	

TYPICAL MALFUNCTION THRESHOLDS

Detection Criteria	Threshold
Response rate deterioration level	Less than 0.2 V

WIRING DIAGRAM

Refer to DTC P2195 on page DI−312.

INSPECTION PROCEDURE

HINT:

Hand−held tester only:

Malfunctioning areas can be identified by performing the A/F CONTROL function provided in the ACTIVE TEST. The A/F CONTROL function can help to determine whether the Air−Fuel Ratio (A/F) sensor, Heated Oxygen (HO2) sensor and other potential trouble areas are malfunctioning.

The following instructions describe how to conduct the A/F CONTROL operation using a hand−held tester.

(1) Connect a hand−held tester to the DLC3.
(2) Start the engine and turn the tester ON.
(3) Warm up the engine at an engine speed of 2,500 rpm for approximately 90 seconds.
(4) On the tester, select the following menu items: DIAGNOSIS / ENHANCED OBD II / ACTIVE TEST / A/F CONTROL.
(5) Perform the A/F CONTROL operation with the engine in an idling condition (press the RIGHT or LEFT button to change the fuel injection volume).
(6) Monitor the voltage outputs of the A/F and HO2 sensors (AFS B1S1 (AFS B2S1) and OS2 B1S2 (O2S B2S2)) displayed on the tester.

HINT:

- The A/F CONTROL operation lowers the fuel injection volume by 12.5 % or increases the injection volume by 25 %.
- Each sensor reacts in accordance with increases and decreases in the fuel injection volume.

Standard:

Tester Display (Sensor)	Injection Volumes	Status	Voltages
AFS B1S1 (AFS B2S1) (A/F)	+25 %	Rich	Less than 3.0
AFS B1S1 (AFS B2S1) (A/F)	−12.5 %	Lean	More than 3.35
O2S B1S2 (O2S B2S2) (HO2)	+25 %	Rich	More than 0.55
O2S B1S2 (O2S B2S2) (HO2)	−12.5 %	Lean	Less than 0.4

NOTICE:

The Air−Fuel Ratio (A/F) sensor has an output delay of a few seconds and the Heated Oxygen (HO2) sensor has a maximum output delay of approximately 20 seconds.

- Following the A/F CONTROL procedure enables technicians to check and graph the voltage outputs of both the A/F and HO2 sensors.
- To display the graph, select the following menu items on the tester: DIAGNOSIS / ENHANCED OBD II / ACTIVE TEST / A/F CONTROL / USER DATA / AFS B1S1 and O2S B1S2, and press the YES button and then the ENTER button followed by the F4 button.

Case	A/F Sensor (Sensor 1) Output Voltage	HO2 Sensor (Sensor 2) Output Voltage	Main Suspected Trouble Areas
1	Injection volume +25 % −12.5 % Output voltage More than 3.35 V Less than 3.0 V **OK**	Injection volume +25 % −12.5 % Output voltage More than 0.55 V Less than 0.4V **OK**	—
2	Injection volume +25 % −12.5 % Output voltage Almost no reaction **NG**	Injection volume +25 % −12.5 % Output voltage More than 0.55 V Less than 0.4V **OK**	● A/F sensor ● A/F sensor heater ● A/F sensor circuit
3	Injection volume +25 % −12.5 % Output voltage More than 3.35 V Less than 3.0V **OK**	Injection volume +25 % −12.5 % Output voltage Almost no reaction **NG**	● HO2 sensor ● HO2 sensor heater ● HO2 sensor circuit
4	Injection volume +25 % −12.5 % Output voltage Almost no reaction **NG**	Injection volume +25 % −12.5 % Output voltage Almost no reaction **NG**	● Injector ● Fuel pressure ● Gas leakage from exhaust system (Air−fuel ratio extremely lean or rich)

HINT:

- DTC P2A00 and/or P2A03 may be also set, when the air−fuel ratio is stuck rich or lean.
- A low A/F sensor voltage could be caused by a rich air−fuel mixture. Check for conditions that would cause the engine to run rich.
- A high A/F sensor voltage could be caused by a lean air−fuel mixture. Check for conditions that would cause the engine to run lean.
- Read freeze frame data using a hand−held tester or OBD II scan tool. Freeze frame data record the engine condition when malfunctions are detected. When troubleshooting, freeze frame data can help determine if the vehicle was moving or stationary, if the engine was warmed up or not, if the air−fuel ratio was lean or rich, and other data, from the time the malfunction occurred.

1	Check any other DTCs output (in addition to DTC P2A00 or P2A03).

PREPARATION:

(a) Connect a hand−held tester to the DLC3.
(b) Turn the ignition switch to ON and turn the tester ON.
(c) Select the following menu items: DIAGNOSIS / ENHANCED OBD II / DTC INFO / CURRENT CODES.

CHECK:

(a) Read DTCs.

Result:

Display (DTC Output)	Proceed To
P2A00 and/or P2A03	A
P2A00 and/or P2A03 and other DTCs	B

HINT:
If any DTCs other than P2A00 and/or P2A03 are output, troubleshoot those DTCs first.

B → **Go to DTC chart (See page DI−57).**

A

2	Check resistance of air−fuel ratio (A/F) sensor heater.

Component Side:

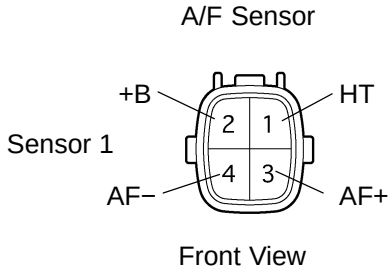

PREPARATION:

Disconnect the air−fuel ratio (A/F) sensor connector.

CHECK:

Measure resistance between the terminals of the A/F sensor connector.

OK:

Standard:

Tester Connection	Specified Condition
HT (1) − +B (2)	1.8 Ω to 3.4 Ω at 20°C (68°F)
HT (1) − AF− (4)	10 kΩ or higher

NG → **Replace air−fuel ratio (A/F) sensor.**

OK

3	**Check for open and short in harness and connector between ECM and A/F sensor.**

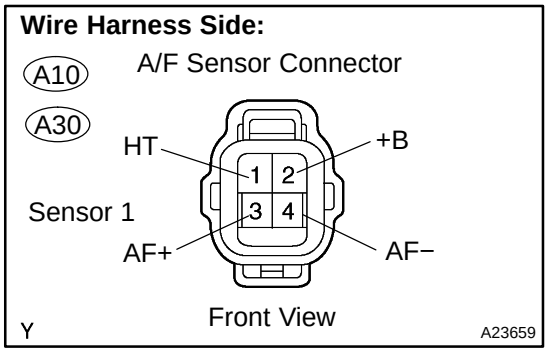

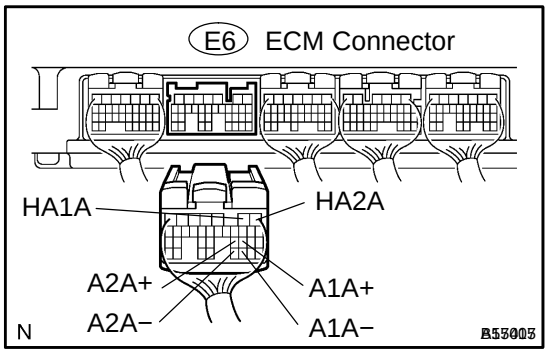

PREPARATION:

(a) Disconnect the A10 or A30 A/F sensor connector.

(b) Turn the ignition switch to ON.

CHECK:

(a) Measure the voltage between the +B terminal of the A/F sensor connector and body ground.

OK:

Standard:

Tester Connections	Specified Conditions
+B (2) − Body ground	9 V to 14 V

PREPARATION:

(a) Turn the ignition switch to OFF.

(b) Disconnect the E6 ECM connector.

CHECK:

(a) Check the resistance.

OK:

Standard (Check for open):

Tester Connections	Specified Conditions
HT (A10−1) − HA1A (E6−2) HT (A30−1) − HA2A (E6−1)	Below 1 Ω
AF+ (A10−3) − A1A+ (E6−22) AF+ (A30−3) − A2A+ (E6−23)	Below 1 Ω
AF− (A10−4) − A1A− (E6−30) AF− (A30−4) − A2A− (E6−31)	Below 1 Ω

Standard (Check for short):

Tester Connections	Specified Conditions
HT (A10−1) or HA1A (E6−2) − Body ground HT (A30−1) or HA2A (E6−1) − Body ground	10 kΩ or higher
AF+ (A10−3) or A1A+ (E6−22) − Body ground AF+ (A30−3) or A2A+ (E6−23) − Body ground	10 kΩ or higher
AF− (A10−4) or A1A− (E6−30) − Body ground AF− (A30−4) or A2A− (E6−31) − Body ground	10 kΩ or higher

Reference (Bank 1 Sensor 1 System Drawing):

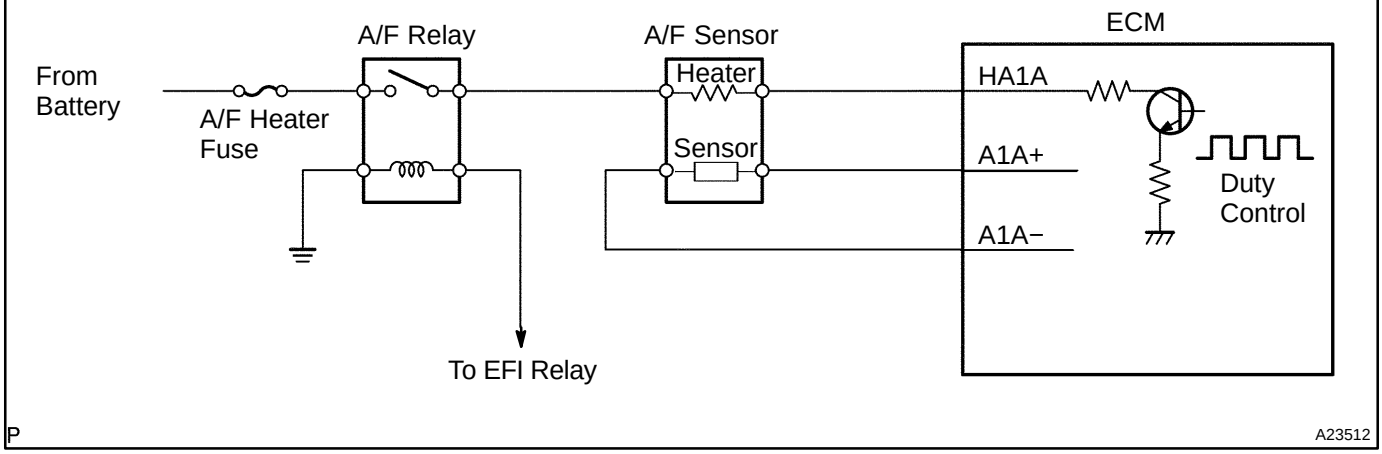

NG → **Replace or replace harness or connector.**

OK

4	**Perform confirmation driving pattern.**

NEXT

5	**Check whether DTC output recurs (DTC P2A00 or P2A03)**

CHECK:

(a) On the hand−held tester, select the following menu items: DIAGNOSIS / ENHANCED OBD II / DTC INFO / PENDING CODES.

(b) Read DTCs.

RESULT:

Display (DTC Output)	Proceed To
P2A00 or P2A03	A
No output	B

B → **Check for intermittent problems (See page DI−11).**

A

6	**Replace air fuel ratio sensor.**

NEXT

7	**Perform confirmation driving pattern.**

NEXT

8	Check whether DTC output recurs (DTC P2A00 or P2A03)

CHECK:

(a) On the hand−held tester, select the following menu items: DIAGNOSIS / ENHANCED OBD II / DTC INFO / PENDING CODES.

(b) Read DTCs.

RESULT:

Display (DTC Output)	Proceed To
P2A00 or P2A03	A
No output	B

A → **Check air−fuel ratio extremely lean or rich (See page DI−160).**

B → **END**

DIDU1−01

DTC	P2118	Throttle Actuator Control Motor Current Range/Performance

CIRCUIT DESCRIPTION

The Electronic Throttle Control System (ETCS) has a dedicated power supply circuit. The voltage (+BM) is monitored and when the voltage is low (less than 4V), the ECM concludes that the ETCS has a fault and current to the throttle control motor is cut.
When the voltage becomes unstable, the ETCS itself becomes unstable. For this reason, when the voltage is low, the current to the motor is cut. If repairs are made and the system has returned to normal, turn the ignition switch OFF. The ECM then allows current to flow to the motor and the motor can be restarted.
HINT:
This Electrical Throttle Control System (ETCS) does not use a throttle cable.

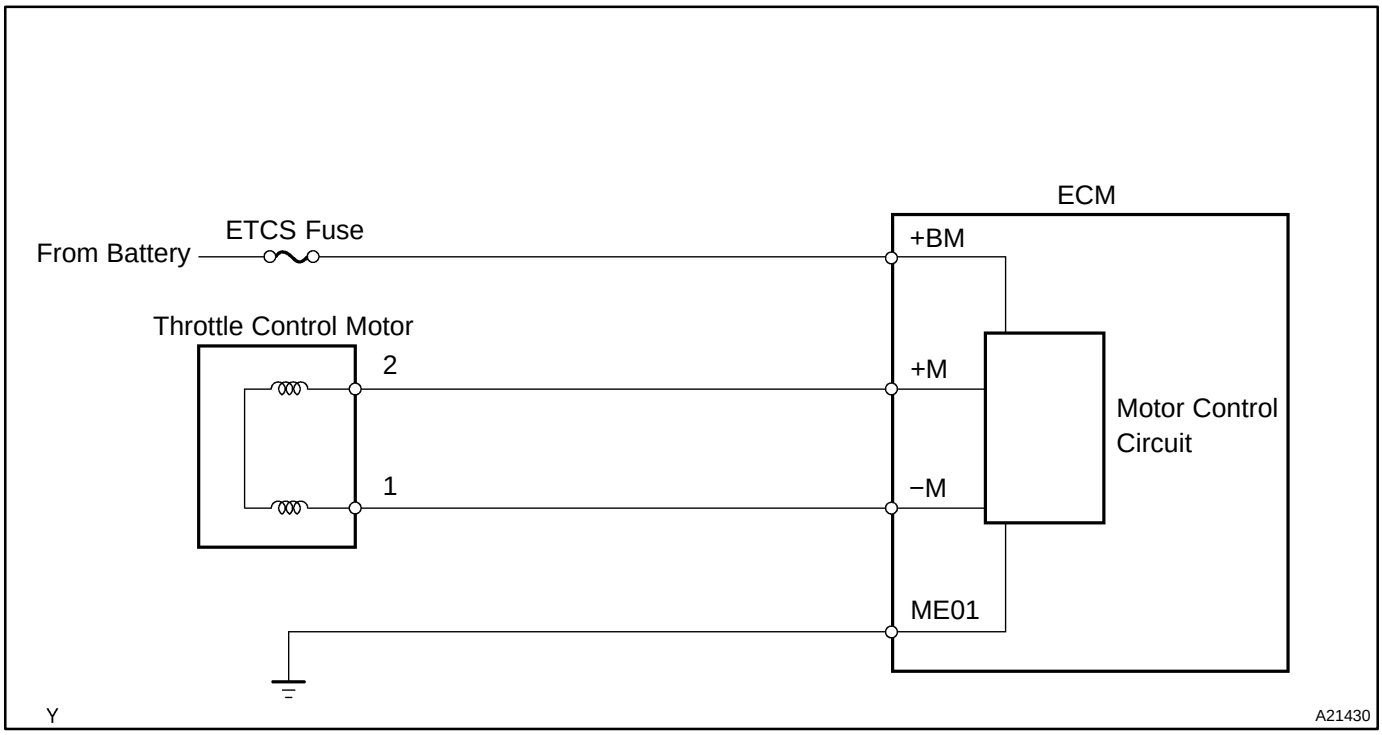

DTC No.	DTC Detection Condition	Trouble Area
P2118	Open in ETCS power source circuit (+BM)	• Open in ETCS power source circuit • ETCS fuse • ECM

MONITOR DESCRIPTION

The ECM monitors the battery supply voltage applied to the electronic throttle motor +BM. When the power supply voltage drops below the threshold, the ECM concludes that the power supply has an open circuit. The MIL is turned on and a DTC is set.

FAIL SAFE

If the ETCS (Electronic Throttle Control System) has a malfunction, the ECM cuts off current to the throttle control motor. The throttle control valve returns to a predetermined opening angle (approximately 16˚) by the force of the return spring. The ECM then adjusts the engine output by controlling the fuel infection (intermittent fuel−cut) and ignition timing in accordance with the accelerator pedal opening angle to enable the vehicle to continue at a minimum speed.
If the accelerator pedal is depressed firmly and slowly, the vehicle can be driven slowly.
If a ”pass” condition is detected and then the ignition switch is turned OFF, the fail−safe operation will stop and the system will return to normal condition.

MONITOR STRATEGY

Related DTCs	P2118	Throttle actuator motor power supply line range check (Low voltage)
Required sensors/components	Throttle actuator motor	
Frequency of operation	Continuous	
Duration	0.8 sec.	
MIL operation	Immediate	
Sequence of operation	None	

TYPICAL ENABLING CONDITIONS

Item	Specification	
	Minimum	Maximum
The monitor will run whenever this DTC is not present	See page DI−18	
Actuator power	ON	
Battery voltage	8 V	−

TYPICAL MALFUNCTION THRESHOLDS

Detection Criteria	Threshold
Throttle actuator motor power supply voltage	Less than 4 V

COMPONENT OPERATING RANGE

Parameter	Standard Value
Throttle actuator motor power supply voltage	9 to 14 V

WIRING DIAGRAM

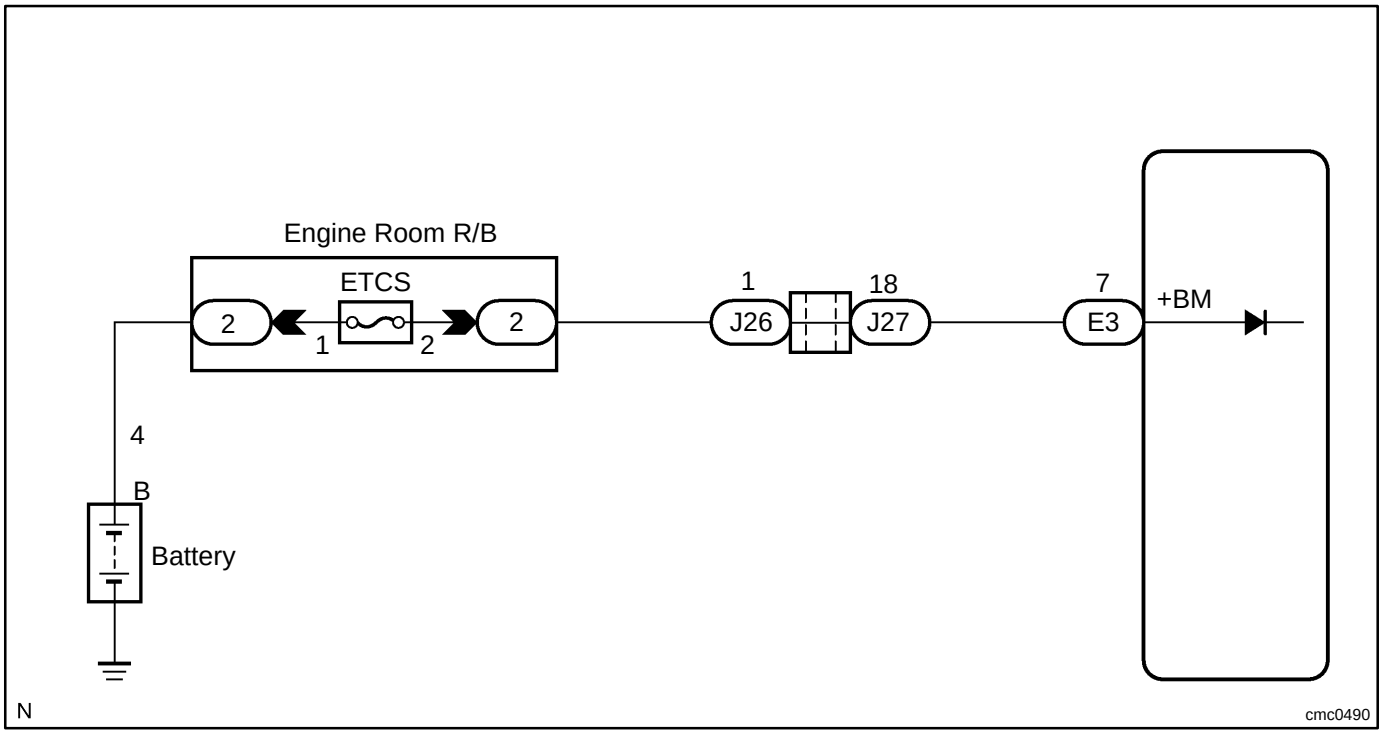

INSPECTION PROCEDURE

HINT:

Read freeze frame data using the hand−held tester. Freeze frame data records the engine conditions when a malfunction is detected. When troubleshooting, freeze frame data can help determine if the vehicle was running or stopped, if the engine was warmed up or not, if the air−fuel ratio was lean or rich, as well as other data from the time when a malfunction occurred.

1	**Check ETCS fuse.**

Engine Room J/B:

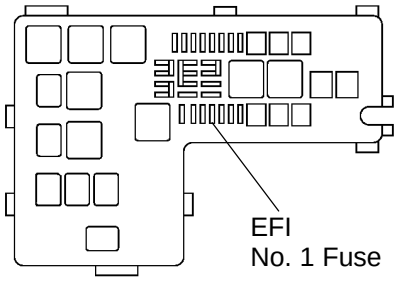

PREPARATION:

Remove the ETCS fuse from the engine room J/B.

CHECK:

Check the resistance of the ETCS fuse.

OK:

Below 1 Ω

NG → **Check for short in all harness and components connected to ETCS fuse.**

OK

2	**Check voltage between terminal +BM and E1 of ECM connector.**

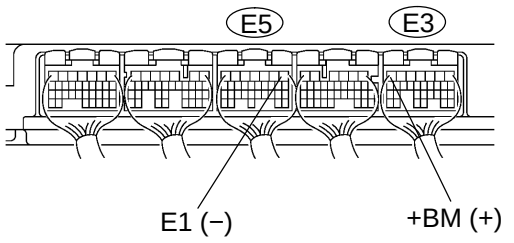

CHECK:

Measure the voltage between the specified terminals of the E5 and E3 ECM connector.

OK:

Standard:

Tester Connection	Specified Condition
+BM (E3−7) − E1 (E5−1)	9 to 14 V

OK → **Check for intermittent problems (See page IN−30).**

NG

3	**Check for open or short in harness or connector between battery and ETCS fuse, ETCS fuse and ECM.**

Engine Room J/B:

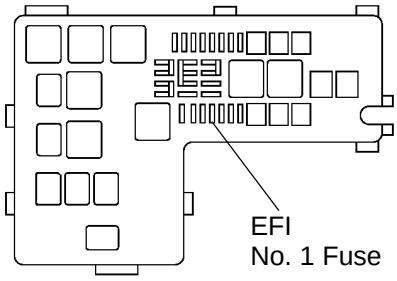

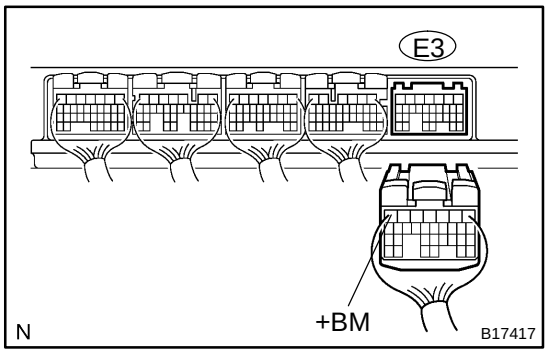

PREPARATION:

(a) Remove the ETCS fuse from the engine room J/B.

(b) Disconnect the E3 ECM connector.

CHECK:

Measure the resistance between the wire harness side connector.

OK:

Standard:

Tester Connection	Specified Condition
Engine Room J/B (ETCS fuse terminal 2) − +BM (E3−7)	Below 1 Ω
Engine Room J/B (ETCS fuse terminal 2) or +BM (E3−7) − Body ground	10 kΩ or higher

PREPARATION:

Disconnect the battery cable from the battery positive terminal.

CHECK:

Measure the resistance between the battery cable and engine room J/B.

OK:

Standard:

Tester Connection	Specified Condition
Engine Room J/B (ETCS fuse terminal 1) − Battery positive cable	Below 1 Ω
Engine Room J/B (ETCS fuse terminal 1) or Battery positive cable − Body ground	10 kΩ or higher

NG → **Repair or replace harness or connector.**

OK

Check engine room J/B.

DIDU2−01

DTC	P2119	Throttle Actuator Control Throttle Body Range/Performance

CIRCUIT DESCRIPTION

The Electric Throttle Control System (ETCS) is composed of a throttle motor that operates the throttle valve, a throttle position sensor that detects the opening angle of the throttle valve, an accelerator pedal position sensor that detects the accelerator pedal position, and the ECM that controls the ETCS system.
The ECM operates the throttle motor to position the throttle valve for proper response to driver inputs. The throttle position sensor, mounted on the throttle body, detects the opening angle of the throttle valve and provides this signal to the ECM so that the ECM can regulate the throttle motor.

DTC No.	DTC Detection Condition	Trouble Area
P2119	Throttle opening angle continues to vary greatly from target throttle opening angle (1 trip detection logic)	• Electric throttle control system • Throttle body

MONITOR DESCRIPTION

The ECM determines the ”actual” throttle angle based on the throttle position sensor signal. The ”actual” throttle position is compared to the ”target” throttle position commanded by the ECM. If the difference of these two values exceeds a specified limit, the ECM interprets this as a fault in the ETCS (Electronic Throttle Control System). The ECM turns on the MIL and a DTC is set.

FAIL SAFE

If the ETCS (Electronic Throttle Control System) has a malfunction, the ECM cuts off current to the throttle control motor. The throttle control valve returns to a predetermined opening angle (approximately 16°) by the force of the return spring. The ECM then adjusts the engine output by controlling the fuel infection (intermittent fuel−cut) and ignition timing in accordance with the accelerator pedal opening angle to enable the vehicle to continue at a minimum speed.
If the accelerator pedal is depressed firmly and slowly, the vehicle can be driven slowly.
If a ”pass” condition is detected and then the ignition switch is turned OFF, the fail−safe operation will stop and the system will return to normal condition.

MONITOR STRATEGY

Related DTCs	P2119	Electronic throttle control system failure
Required sensors/components	Main sensors	Throttle actuator motor
	Related sensors	Throttle position sensor
Frequency of operation	Continuous	
Duration	1 sec.	
MIL operation	Immediate	
Sequence of operation	None	

TYPICAL ENABLING CONDITIONS

The monitor will run whenever this DTC is not present	See page DI−18	
System guard*	ON	
*System guard is ON when the following conditions are met:	−	
Throttle actuator	ON	
Throttle actuator duty calculation	Executing	
Throttle position sensor	Fail determined	
Throttle actuator current−cut	Not executing	
Throttle actuator power supply	4 V	−
Throttle actuator	Fail determined	

TYPICAL MALFUNCTION THRESHOLDS

Detection Criteria	Threshold
Either of the following conditions is met:	Condition (a) or (b)
(a) Commanded closed throttle position − current throttle position	0.3 V or more
(b) Commanded open throttle position − current throttle position	0.3 V or more

COMPONENT OPERATING RANGE

Standard Value
Commanded throttle position and current throttle position are nearly the same

WIRING DIAGRAM

Refer to DTC P2102 and P2103 on page DI−283.

INSPECTION PROCEDURE

HINT:

Read freeze frame data using the hand−held tester. Freeze frame data records the engine conditions when a malfunction is detected. When troubleshooting, freeze frame data can help determine if the vehicle was running or stopped, if the engine was warmed up or not, if the air−fuel ratio was lean or rich, as well as other data from the time when a malfunction occurred.

1	Are there any other codes (besides DTC P2119) being output?

PREPARATION:

(a) Connect the hand−held tester to the DLC3.
(b) Turn the ignition switch to ON and push the hand−held tester main switch ON.
(c) When using hand−held tester, enter the following menu: DIAGNOSIS / ENHANCED OBD II / DTC INFO / CURRENT CODES.

CHECK:

Read the DTC using the hand−held tester.

RESULT:

Display (DTC Output)	Proceed to
P2119	A
”P2119” and other DTC	B

HINT:

If any other codes besides P2119 are output, perform the troubleshooting for those DTCs first.

B → **Go to DTC chart (See page DI−57).**

A

2	Check throttle control motor.

Component Side:
Throttle Control Motor and Sensor

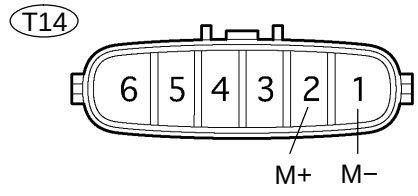

PREPARATION:

Disconnect the throttle control motor and sensor connector.

CHECK:

Measure the resistance between terminals of the throttle control motor.

OK:

Standard:

Tester Connection	Specified Condition
M+ (T14−2) − M− (T14−1)	0.3 to100 Ω (20°C (68°F))

NG → **Replace throttle body (See page SF−40).**

OK

3	**Replace ECM and clear DTC (Check if DTC outputs reoccur).**

PREPARATION:

(a) Replace ECM.
(b) Clear the DTC (See page DI−42).
(c) Start and warm up the engine.
(d) Run the engine at idle for 15 seconds or more.

CHECK:

Read the DTC using the hand−held tester (See page DI−42).

OK:

No DTC output.

OK → **System is normal.**

NG

Replace throttle body.

DIDU4−01

DTC	P2121	Throttle/Pedal Position Sensor/Switch ”D” Circuit Range/Performance

HINT:
This is repair procedure for the ”accelerator pedal position sensor”.

CIRCUIT DESCRIPTION

Refer to DTC P2120 on page DI−299.

DTC No.	DTC Detecting Condition	Trouble Area
P2121	Conditions (a) and (b) continue for 0.5 seconds: (a) Difference between VPA and VPA2 exceeds the threshold (b) IDL is OFF	• Accelerator pedal position sensor circuit • Accelerator pedal position sensor • ECM

MONITOR DESCRIPTION

The accelerator pedal position sensor is mounted on the accelerator pedal bracket. The accelerator pedal position sensor has 2 sensor elements/signal outputs: VPA1 and VPA2. VPA1 is used to detect the actual accelerator pedal angle (used for engine control) and VPA2 is used to detect malfunctions in VPA1. When the difference between the voltage outputs of VPA1 and VPA2 deviates from the standard, the ECM concludes the accelerator pedal position sensor has a malfunction. The ECM turns on the MIL and a DTC is set.

FAIL SAFE

The accelerator pedal position sensor has two (main and sub) sensor circuits. If a malfunction occurs in either of the sensor circuits, the ECM detects the abnormal signal voltage difference between the two sensor circuits and switches to limp mode. In limp mode, the remaining circuit is used to calculate the accelerator pedal opening to allow the vehicle to continue driving.
If both circuits malfunction, the ECM regards the opening angle of the accelerator pedal to be fully closed. In this case, the throttle valve will remain closed as if the engine is idling.
If a ”pass” condition is detected and then the ignition switch is turned OFF, the fail−safe operation will stop and the system will return to normal condition.

MONITOR STRATEGY

Related DTCs	P2121	Accelerator position sensor (rationality)
Required sensors/components	Accelerator position sensor	
Frequency of operation	Continuous	
Duration	0.5 sec.	
MIL operation	Immediate	
Sequence of operation	None	

TYPICAL ENABLING CONDITIONS

Item	Specification	
	Minimum	Maximum
The monitor will run whenever this DTC is not present	See page DI−18	
Either of the following conditions is met	Condition 1 or 2	
1. Ignition switch	ON	
2. Throttle control motor power	ON	

TYPICAL MALFUNCTION THRESHOLDS

Detection Criteria	Threshold
Difference between VPA1 voltage (learned value) and VPA2 voltage (learned value)	Less than 0.4 V, or more than 1.2 V

WIRING DIAGRAM

Refer to DTC P2120 on page DI−299.

INSPECTION PROCEDURE

HINT:

Read freeze frame data using the hand−held tester. Freeze frame data records the engine conditions when a malfunction is detected. When troubleshooting, freeze frame data can help determine if the vehicle was running or stopped, if the engine was warmed up or not, if the air−fuel ratio was lean or rich, as well as other data from the time when a malfunction occurred.

1	**Connect hand−held tester, and read the voltage for accelerator pedal position sensor data.**

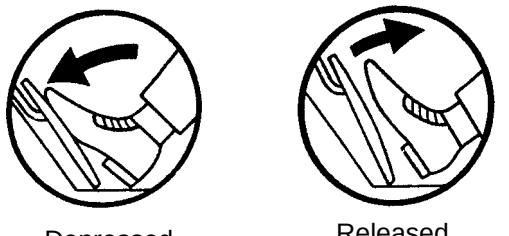

PREPARATION:

(a) Connect the hand−held tester to the DLC3.

(b) Turn the ignition switch to ON and push the hand−held tester main switch ON.

(c) Enter the following menu: DIAGNOSIS / ENHANCED OBD II / DATA LIST / ETCS / ACCEL POS #1 and ACCEL POS #2.

CHECK:

Read the voltage for the accelerator pedal position sensor data.

OK:

Standard:

Accelerator pedal	ACCEL POS #1	ACCEL POS #2
Released	0.5 to 1.1 V	1.2 to 2.0 V
Depressed	2.6 to 4.5 V	3.4 to 5.3 V

OK → **Replace ECM (See page SF−66).**

NG

2	**Check for open and short in harness and connector between accelerator pedal position sensor and ECM.**

Wire Harness Side:
Accelerator Pedal Position Sensor (M/T)

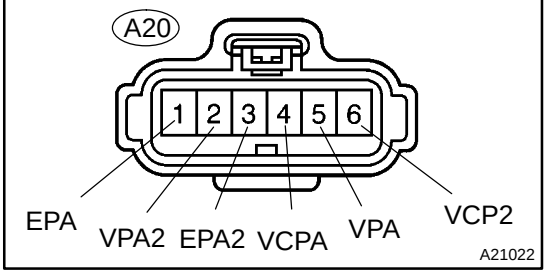

Wire Harness Side:
Accelerator Pedal Position Sensor (A/T)

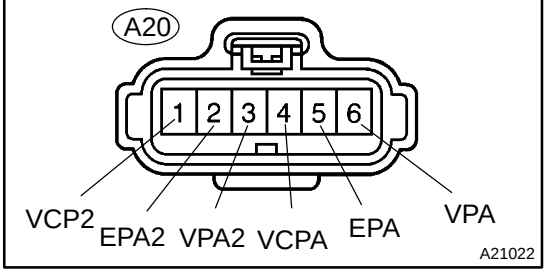

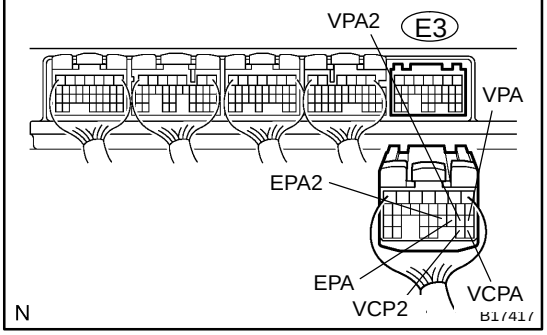

PREPARATION:

(a) Disconnect the A20 accelerator pedal position sensor connector.

(b) Disconnect the E3 ECM connector.

CHECK:

Measure the resistance between the wire harness side connectors.

OK:

Standard:

Tester Connection	Specified Condition
VPA (A20−5) − VPA (E3−18)*1	Below 1 Ω
VPA (A20−6) − VPA (E3−18)*2	Below 1 Ω
EPA (A20−1) − EPA (E3−20)*1	Below 1 Ω
EPA (A20−5) − EPA (E3−20)*2	Below 1 Ω
VCPA (A20−4) − VCPA (E3−26)	Below 1 Ω
VPA2 (A20−2) − VPA2 (E3−19)*1	Below 1 Ω
VPA2 (A20−3) − VPA2 (E3−19)*2	Below 1 Ω
EPA2 (A20−3) − EPA2 (E3−21)*1	Below 1 Ω
EPA2 (A20−2) − EPA2 (E3−21)*2	Below 1 Ω
VCP2 (A20−6) − VCP2 (E3−27)*1	Below 1 Ω
VCP2 (A20−1) − VCP2 (E3−27)*2	Below 1 Ω
VPA (A20−5) or VPA (E3−18) − Body ground*1	10 kΩ or higher
VPA (A20−6) or VPA (E3−18) − Body ground*2	10 kΩ or higher
EPA (A20−1) or EPA (E3−20) − Body ground*1	10 kΩ or higher
EPA (A20−5) or EPA (E3−20) − Body ground*2	10 kΩ or higher
VCPA (A20−4) or VCPA (E3−26) − Body ground	10 kΩ or higher
VPA2 (A20−2) or VPA2 (E3−19) − Body ground*1	10 kΩ or higher
VPA2 (A20−3) or VPA2 (E3−19) − Body ground*2	10 kΩ or higher
EPA2 (A20−3) or EPA2 (E3−21) − Body ground*1	10 kΩ or higher
EPA2 (A20−2) or EPA2 (E3−21) − Body ground*2	10 kΩ or higher
VCP2 (A20−6) or VCP2 (E3−27) − Body ground*1	10 kΩ or higher
VCP2 (A20−1) or VCP2 (E3−27) − Body ground*2	10 kΩ or higher

*1: M/T

*2: A/T

NG → **Repair or replace harness or connector.**

OK

Replace accelerator pedal pedal assembly.

DIDU9−01

DTC	P2610	ECM/PCM Internal Engine OFF Timer Performance

DTC SUMMARY

DTC	Monitoring Items	Malfunction Detection Conditions	Trouble Areas	Detection Timings	Detection Logic
P2610	Soak timer (built into ECM)	ECM internal malfunction	ECM	Engine running	2 trip

CIRCUIT DESCRIPTION

To ensure the accuracy of the EVAP (Evaporative Emission) monitor values, the soak timer, which is built into the ECM, measures 5 hours (±15 minutes) from when the ignition switch is turned OFF, before the monitor is run. This allows the fuel to cool down, which stabilizes the Fuel Tank Pressure (FTP). When 5 hours have elapsed, the ECM turns on.

Soak Timer Circuit

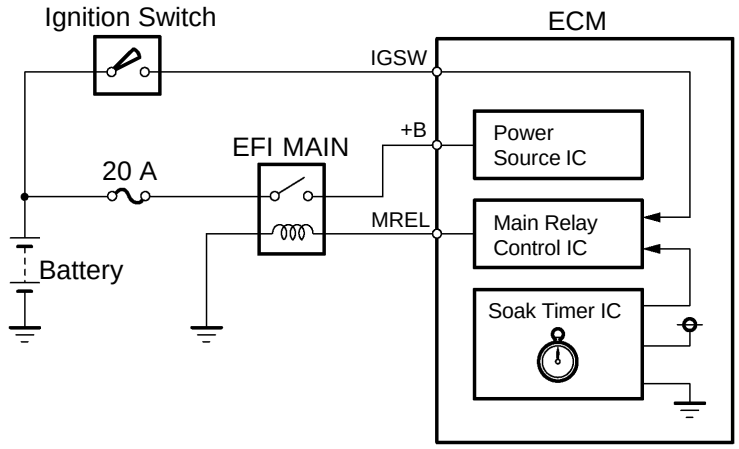

A23667

MONITOR DESCRIPTION

5 hours after the ignition switch is turned OFF, the soak timer activates the ECM to begin the EVAP system monitor. While the engine is running, the ECM monitors the synchronization of the soak timer and the CPU clock. If these two are not synchronized, the ECM interprets this as a malfunction, illuminates the MIL and sets the DTC (2 trip detection logic).

MONITOR STRATEGY

Related DTCs	P2610	Soak timer (built into ECM)
Required sensors/components	ECM	
Frequency of operation	Once per driving cycle	
Duration	10 min.	
MIL operation	2 driving cycles	
Sequence of operation	None	

TYPICAL ENABLING CONDITIONS

Item	Specification	
	Minimum	Maximum
The monitor will run whenever these DTCs are not present	See page DI−18	
Battery voltage	8 V	−
Ignition switch	ON	
Starter	OFF	
Engine	Running	

TYPICAL MALFUNCTION THRESHOLDS

Detection Criteria	Threshold
Soak time measurement when ECM CPU clock counts 10 min.	Less than 7 min., or more than 13 min.

INSPECTION PROCEDURE

HINT:

- DTC P2610 is set if an internal ECM problem is detected. Diagnostic procedures are not required. ECM replacement is required.
- Read freeze frame data using a hand−held tester or OBD II scan tool. Freeze frame data record the engine condition when malfunctions are detected. When troubleshooting, freeze frame data can help determine if the vehicle was moving or stationary, if the engine was warmed up or not, if the air−fuel ratio was lean or rich, and other data, from the time the malfunction occurred.

1	**Replace ECM (See page SF−66).**

NEXT

Check whether DTC output recurs.

(a) Connect a hand−held tester to the DLC3.
(b) Turn the ignition switch to ON.
(c) Clear DTCs (see page DI−42).
(d) Start the engine and wait for 10 minutes or more.
(e) On the tester, select the following menu items: DIAGNOSIS / ENHANCED OBD II / DTC INFO / PENDING CODES.
(f) If no pending DTC is displayed, the repair has been successfully completed.

DIDTZ−01

DTC	P2102	Throttle Actuator Control Motor Circuit Low

DTC	P2103	Throttle Actuator Control Motor Circuit High

CIRCUIT DESCRIPTION

The throttle motor is operated by the ECM. It opens and closes the throttle valve.
The opening angle of the throttle valve is detected by the throttle position sensor which is mounted on the throttle body. The throttle position sensor provides feedback to the ECM. This feedback allows the ECM to control the throttle motor and monitor the throttle opening angle as the ECM responds to driver inputs.
HINT:
This Electrical Throttle Control System (ETCS) does not use a throttle cable.

DTC No.	DTC Detection Condition	Trouble Area
P2102	Conditions (a) and (b) continue for 2.0 seconds: (1 trip detection logic) (a) Throttle control motor output duty 80 % or more (b) Throttle control motor current less than 0.5 A or less	• Open in throttle control motor and sensor circuit • Throttle control motor and sensor • ECM
P2103	Either of the following condition is met. (1 trip detection logic) (a) Hybrid IC diagnosis signal fail (b) Hybrid IC current limiter port fail	• Short in throttle control motor and sensor circuit • Throttle control motor and sensor • Throttle valve • Throttle body • ECM

MONITOR DESCRIPTION

The ECM monitors the current through the electronic throttle motor and detects malfunctions or open circuit in the throttle motor based on the voltage of the current. When the current deviates from the standard, the ECM concludes that there is a fault in the throttle motor.
Or, if the throttle valve is not functioning properly (for example, stuck ON), the ECM concludes that there is a fault, turns on the MIL and sets a DTC is set.
Example:
When the current is more than 10 A. Or the current is less than 0.5 A when the motor driving duty ratio is exceeding 80%. The ECM concludes that the current is out of range, turns on the MIL and a DTC is set.

FAIL SAFE

If the ETCS (Electronic Throttle Control System) has a malfunction, the ECM cuts off current to the throttle control motor. The throttle control valve returns to a predetermined opening angle (approximately 16°) by the force of the return spring. The ECM then adjusts the engine output by controlling the fuel infection (intermittent fuel−cut) and ignition timing in accordance with the accelerator pedal opening angle to enable the vehicle to continue at a minimum speed.
If the accelerator pedal is depressed firmly and slowly, the vehicle can be driven slowly.
If a ”pass” condition is detected and then the ignition switch is turned OFF, the fail−safe operation will stop and the system will return to normal condition.

MONITOR STRATEGY

Related DTCs	P2102	Throttle actuator control motor current (Low current)
	P2103	Throttle actuator control motor current (High current)
Required sensors/components	Throttle actuator motor	
Frequency of operation	Continuous	
Duration	2 sec.	
MIL operation	Immediate	
Sequence of operation	None	

TYPICAL ENABLING CONDITIONS

Item	Specification	
	Minimum	Maximum
The monitor will run whenever these DTCs are not present	See page DI−18	
P2102:		
Throttle motor	ON	
Duty−cycle ratio to open throttle actuator	80%	−
Throttle actuator power supply	8 V	−
Current motor current − Motor current at 0.016 sec. before	−	0.2 A
P2103:		
Throttle motor	ON	
Either of the following conditions is met:	Condition 1 or 2	
1. Throttle actuator power supply	8 V	−
2. Throttle actuator power	ON	
Battery voltage	8 V	−
Starter	OFF	

TYPICAL MALFUNCTION THRESHOLDS

Detection Criteria	Threshold
P2102:	
Throttle motor current	Less than 0.5 A (when motor drive duty 80% or more)
P2103:	
Either of the following conditions is met:	Condition 1 or 2
1. Hybrid IC diagnosis signal	Fail
2. Hybrid IC current limiter port	Fail

WIRING DIAGRAM

Refer to DTC P0120 on page DI−123.

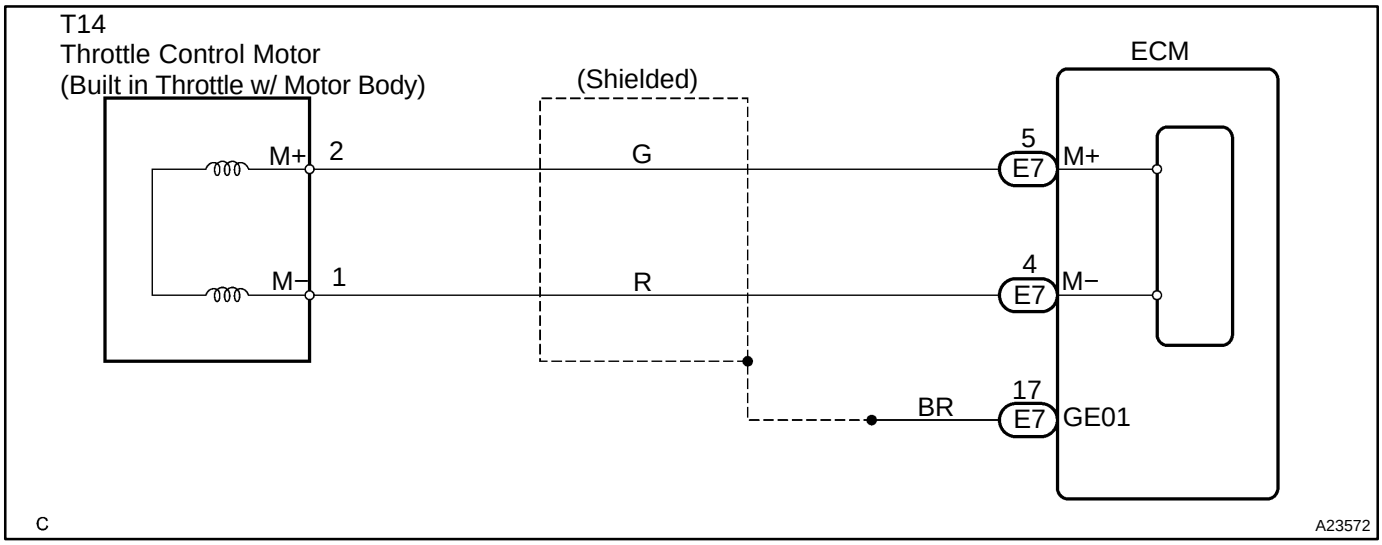

INSPECTION PROCEDURE

HINT:

Read freeze frame data using the hand−held tester. Freeze frame data records the engine conditions when a malfunction is detected. When troubleshooting, freeze frame data can help determine if the vehicle was running or stopped, if the engine was warmed up or not, if the air−fuel ratio was lean or rich, as well as other data from the time when a malfunction occurred.

1	**Check throttle control motor.**

Component Side:
Throttle Control Motor and Sensor

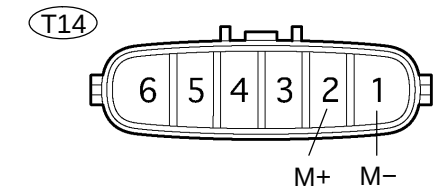

PREPARATION:

Disconnect the throttle control motor and sensor connector.

CHECK:

Measure the resistance between terminals of the throttle control motor.

OK:

Standard:

Tester Connection	Specified Condition
M+ (T14−2) − M− (T14−1)	0.3 to100 Ω (20°C (68°F))

NG → **Replace throttle body (See page SF−40).**

OK

2	Check for open and short in harness and connector between throttle control motor and ECM.

Wire Harness Side:
Throttle Control Motor and Sensor

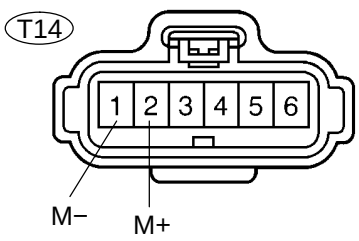

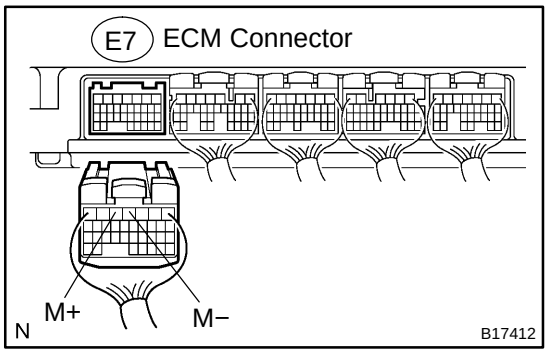

PREPARATION:

(a) Disconnect the T14 throttle control motor and sensor connector.

(b) Disconnect the E7 ECM connector.

CHECK:

Measure the resistance between the wire harness side connectors.

OK:

Standard:

Tester Connection	Specified Condition
M+ (T14−2) − M+ (E7−5)	Below 1 Ω
M− (T14−1) − M− (E7−4)	Below 1 Ω
M+ (T14−2) or M+ (E7−5) − Body ground	10 kΩ or higher
M− (T14−1) or M− (E7−4) − Body ground	10 kΩ or higher

NG → **Repair or replace harness or connector.**

OK

3	Visually check throttle valve.

CHECK:

Check the area between the throttle valve and the housing for foreign objects.
Also, check if the valve can open and close smoothly.

OK:

The throttle valve is not contaminated by foreign objects and can move smoothly.

NG → **Remove foreign object and clean throttle body.**

OK

Replace ECM (See page SF−66).

DIDU0−01

DTC	P2111	Throttle Actuator Control System −Stuck Open

DTC	P2112	Throttle Actuator Control System −Stuck Closed

CIRCUIT DESCRIPTION

The throttle motor is operated by the ECM. It opens and closes the throttle valve using gears. The opening angle of the throttle valve is detected by the throttle position sensor, which is mounted on the throttle body. The throttle position sensor provides feedback to the ECM to control the throttle motor and set the throttle valve angle in response to driver input.

HINT:

This Electrical Throttle Control System (ETCS) does not use a throttle cable.

DTC No.	DTC Detection Condition	Trouble Area
P2111	Throttle motor locked during ECM order to close. (1 trip detection logic)	• Throttle control motor and sensor circuit • Throttle control motor and sensor • Throttle body • Throttle valve
P2112	Throttle motor locked during ECM order to open. (1 trip detection logic)	

MONITOR DESCRIPTION

The ECM concludes that there is a malfunction of the ETCS (Electronic Throttle Control System) when the throttle valve remains at a fixed angle despite high drive current from the ECM. The ECM will turn on the MIL and a DTC is set.

FAIL SAFE

If the ETCS (Electronic Throttle Control System) has a malfunction, the ECM cuts off current to the throttle control motor. The throttle control valve returns to a predetermined opening angle (approximately 16°) by the force of the return spring. The ECM then adjusts the engine output by controlling the fuel infection (intermittent fuel−cut) and ignition timing in accordance with the accelerator pedal opening angle to enable the vehicle to continue at a minimum speed.

If the accelerator pedal is depressed firmly and slowly, the vehicle can be driven slowly.

If a ”pass” condition is detected and then the ignition switch is turned OFF, the fail−safe operation will stop and the system will return to normal condition.

MONITOR STRATEGY

Related DTCs	P2111	Throttle motor actuator lock (Open)
	P2112	Throttle motor actuator lock (Closed)
Required sensors/components	Main sensors/components	Throttle actuator motor
	Related sensors/components	Throttle position sensor
Frequency of operation	Continuous	
Duration	0.5 sec.	
MIL operation	Immediate	
Sequence of operation	None	

TYPICAL ENABLING CONDITIONS

Item	Specification	
	Minimum	Maximum
The monitor will run whenever these DTCs are not present	See page DI−18	
P2111:		
System guard*	ON	
Throttle actuator current	2 A	−
Throttle actuator duty to close side	80%	−
P2112:		
System guard*	ON	
Throttle actuator current	2 A	−
Throttle actuator duty to open side	80%	−
All:		
*System guard is ON when the following conditions are met:	−	
Throttle actuator	ON	
Throttle actuator duty calculation	Executing	
Throttle position sensor	Fail determined	
Throttle actuator current−cut operation	Not executing	
Throttle actuator power supply	4 V	−
Throttle actuator	Fail determined	

TYPICAL MALFUNCTION THRESHOLDS

Detection Criteria	Threshold
TP sensor voltage change	No change

WIRING DIAGRAM

Refer to DTC P0120 on page DI−123.

INSPECTION PROCEDURE

HINT:

Read freeze frame data using the hand−held tester. Freeze frame data records the engine conditions when a malfunction is detected. When troubleshooting, freeze frame data can help determine if the vehicle was running or stopped, if the engine was warmed up or not, if the air−fuel ratio was lean or rich, as well as other data from the time when a malfunction occurred.

1	**Check any other DTC output (in addition to DTC P2111 or P2112).**

PREPARATION:

(a) Connect a hand−held tester to the DLC3.
(b) Turn the ignition switch to ON and turn the tester ON.
(c) Select the following menu items: DIAGNOSIS / ENHANCED OBD II / DTC INFO / CURRENT CODES.

CHECK:

(a) Read DTCs.

Result:

Display (DTC Output)	Proceed To
P2111 and/or P2112	A
P2111 and/or P2112 and other DTCs	B

HINT:
If any DTCs other than P2111 and/or P2112 are output, troubleshoot those DTCs first.

B → **Go to DTC chart (See page DI−57).**

A

2	**Visually check throttle valve.**

PREPARATION:

Remove the air cleaner assy.

CHECK:

Check whether or not a foreign body is caught between the throttle valve and housing. Also, check if the valve can open and close smoothly.

OK:

The throttle valve is not contaminated by foreign objects and can move smoothly.

NG → **Remove foreign body and clean throttle body.**

OK

3	Check throttle control motor.

Component Side:
Throttle Control Motor and Sensor

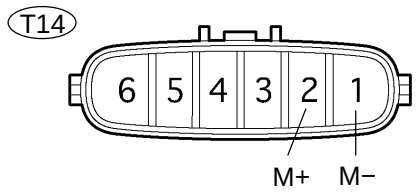

PREPARATION:
Disconnect the throttle control motor and sensor connector.

CHECK:
Measure the resistance between terminals of the throttle control motor.

OK:

Standard:

Tester Connection	Specified Condition
M+ (T14−2) − M− (T14−1)	0.3 to100 Ω (20°C (68°F))

NG → **Replace throttle body (See page SF−40).**

OK

4	Check for open and short in harness and connector between ECM and throttle control motor.

Wire Harness Side:
Throttle Control Motor and Sensor

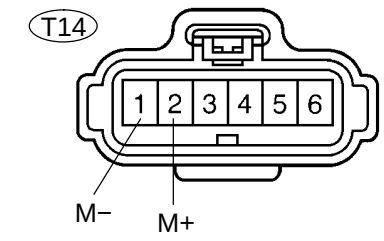

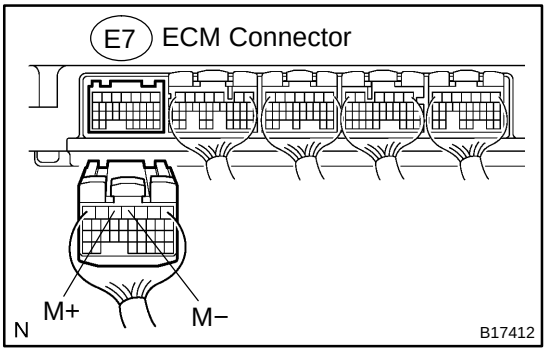

PREPARATION:
(a) Disconnect the T14 throttle control motor and sensor connector.
(b) Disconnect the E7 ECM connector.

CHECK:
Measure the resistance between the wire harness side connectors.

OK:

Standard:

Tester Connection	Specified Condition
M+ (T14−2) − M+ (E7−5)	Below 1 Ω
M− (T14−1) − M− (E7−4)	Below 1 Ω
M+ (T14−2) or M+ (E7−5) − Body ground	10 kΩ or higher
M− (T14−1) or M− (E7−4) − Body ground	10 kΩ or higher

NG → **Repair or replace harness or connector.**

OK

Check for intermittent problems (See page DI−11).

DIDU3−01

DTC	P2120	Throttle/Pedal Position Sensor/Switch ”D” Circuit

DTC	P2122	Throttle/Pedal Position Sensor/Switch ”D” Circuit Low Input

DTC	P2123	Throttle/Pedal Position Sensor/Switch ”D” Circuit High Input

DTC	P2125	Throttle/Pedal Position Sensor/Switch ”E” Circuit

DTC	P2127	Throttle/Pedal Position Sensor/Switch ”E” Circuit Low Input

DTC	P2128	Throttle/Pedal Position Sensor/Switch ”E” Circuit High Input

DTC	P2138	Throttle/Pedal Position Sensor/Switch ”D”/”E” Voltage Correlation

HINT:
This is the repair procedure for the ”accelerator pedal position sensor”.

CIRCUIT DESCRIPTION

HINT:

- This electrical throttle control system does not use a throttle cable.
- This accelerator pedal position sensor is a non−contact type.

The accelerator pedal position sensor is mounted in the accelerator pedal to detect the angle of the accelerator pedal. This sensor is electronically controlled and uses Hall−effect elements.

In the accelerator pedal position sensor, the voltage applied to terminals VPA and VPA2 of the ECM changes between 0 V and 5 V in proportion to the angle of the accelerator pedal. The VPA is a signal to indicate the actual accelerator pedal angle and is used for the engine control. VPA2 is used to detect malfunctions of the sensor itself.

The ECM judges the current angle of the accelerator pedal from these signals input from terminals VPA and VPA2, and the ECM controls the throttle motor based on these signals.

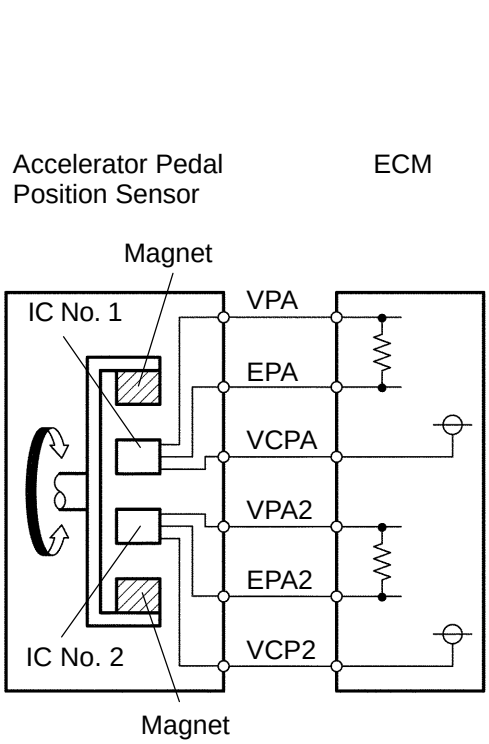

A19694

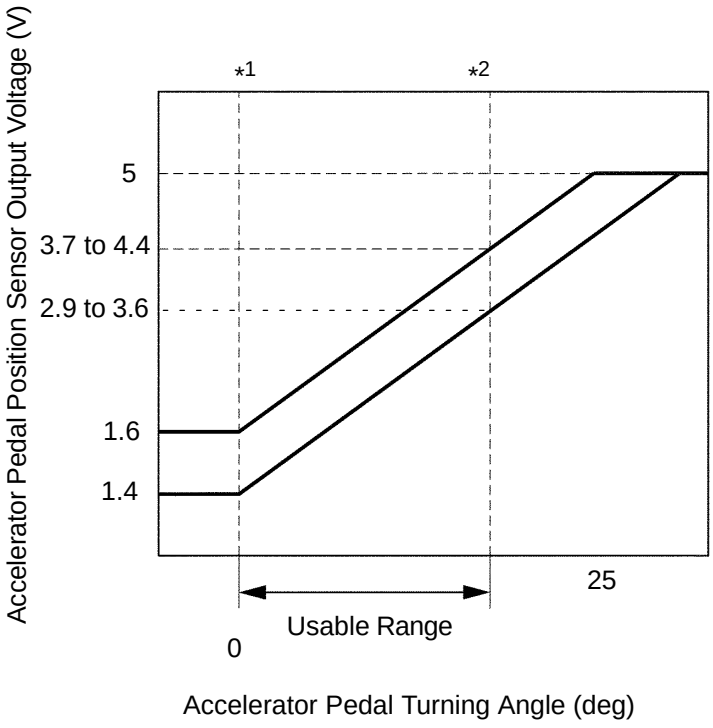

*1 : Accelerator Pedal Fully Released

*2 : Accelerator Pedal Fully Depressed

A19803

DTC No.	DTC Detection Condition (Open or short in accelerator pedal position sensor circuit)	Main trouble Area
P2120	Condition (a) continues for 0.5 seconds or more: (a) VPA ≦ 0.4 V or VPA ≧ 4.8 V	• Accelerator pedal position sensor • ECM
P2122	Condition (a) and (b) continues for 0.5 seconds or more: (a) VPA ≦ 0.4 V (b) VPA2 ≧ 0.04 V	• Accelerator pedal position sensor • VCPA circuit open • VPA circuit open or ground short • ECM
P2123	Condition (a) continues for 2.0 seconds or more: (a) VPA ≧ 4.8 V	• Accelerator pedal position sensor • EPA circuit open • ECM
P2125	Condition (a) continues for 0.5 seconds or more: (a) VPA2 ≦ 1.2 V or VPA2 ≧ 4.8 V and 0.4 V ≦ VPA ≦ 3.45 V	• Accelerator pedal position sensor • ECM
P2127	Condition (a) and (b) continues for 0.5 seconds or more: (a) VPA2 ≦ 1.2 V (b) VPA ≧ 0.04 V	• Accelerator pedal position sensor • VCP2 circuit open • VPA2 circuit open or ground short • ECM
P2128	Condition (a) and (b) continues for 2.0 seconds or more: (a) VPA2 ≧ 4.8 V (a) 0.4 V ≦ VPA ≦ 3.45 V	• Accelerator pedal position sensor • EPA circuit open • ECM
P2138	Condition (a) or (b) continues for 2.0 seconds or more: (a) |VPA − VPA2| ≦ 0.02 V (b) VPA ≦ 0.4 V and VPA2 ≦ 1.2 V	• VPA and VPA2 circuit are short circuited • Accelerator pedal position sensor • ECM

HINT:
After confirming DTC P2120, P2122, P2123, P2125, P2127, P2128 and P2138 use the OBD II scan tool or the hand−held tester to confirm the accelerator pedal opening percentage.

Trouble area	Accelerator pedal position expressed as voltage			
	Accelerator pedal completely released		Accelerator pedal fully depressed	
	ACCEL POS #1	ACCEL POS #2	ACCEL POS #1	ACCEL POS #2
VC circuit open	0 to 0.2 V	0 to 0.2 V	0 to 0.2 V	0 to 0.2 V
VPA circuit open or ground short	0 to 0.2 V	1.2 to 2.0 V	0 to 0.2 V	3.4 to 5.3 V
VPA2 circuit open or ground short	0.5 to 1.1 V	0 to 0.2 V	2.6 to 4.5 V	0 to 0.2 V
E2 circuit open	4.5 to 5.5 V	4.5 to 5.5 V	4.5 to 5.5 V	4.5 to 5.5 V

MONITOR DESCRIPTION

When VPA or VPA2 deviates from the standard, or the difference between the voltage outputs of the two sensors is less than threshold, the ECM concludes that there is a defect in the accelerator pedal position sensor. The ECM turns on the MIL and a DTC is set.
Example:
When the voltage output of the VPA is below 0.4 V or exceeds 4.8 V.

FAIL SAFE

The accelerator pedal position sensor has two (main and sub) sensor circuits. If a malfunction occurs in either of the sensor circuits, the ECM detects the abnormal signal voltage difference between the two sensor circuits and switches to limp mode. In limp mode, the remaining circuit is used to calculate the accelerator pedal opening to allow the vehicle to continue driving.
If both circuits malfunction, the ECM regards the opening angle of the accelerator pedal to be fully closed. In this case, the throttle valve will remain closed as if the engine is idling.
If a ”pass” condition is detected and then the ignition switch is turned OFF, the fail−safe operation will stop and the system will return to normal condition.

MONITOR STRATEGY

Related DTCs	P2120	Accelerator position sensor 1 (VPA) range check (Fluttering)
	P2122	Accelerator position sensor 1 (VPA) range check (Low voltage)
	P2123	Accelerator position sensor 1 (VPA) range check (High voltage)
	P2125	Accelerator position sensor 2 (VPA2) range check (Fluttering)
	P2127	Accelerator position sensor 2 (VPA2) range check (Low voltage)
	P2128	Accelerator position sensor 2 (VPA2) range check (High voltage)
	P2138	Accelerator position sensor correlation range check
Required sensors/components	Accelerator position sensor	
Frequency of operation	Continuous	
Duration	2 sec.	
MIL operation	Immediate	
Sequence of operation	None	

TYPICAL ENABLING CONDITIONS

Item	Specification	
	Minimum	Maximum
The monitor will run whenever these DTCs are not present	See page DI−18	
Ignition switch	ON	
Throttle control motor power	ON	

TYPICAL MALFUNCTION THRESHOLDS

Detection Criteria	Threshold
P2120:	
Either of the following conditions is met	Condition 1 or 2
1. VPA1 voltage when VPA2 voltage is 0.04 V or more	0.4 V or less
2. VPA1 voltage	4.8 V or more
P2122:	
VPA1 voltage when VPA2 voltage is 0.04 V or more	0.4 V or less
P2123:	
VPA1 voltage	4.8 V or more
P2125:	
Either of the following conditions is met	Condition 1 or 2
1. VPA2 voltage when VPA1 voltage is 0.04 V or more	1.2 V or less
2. VPA2 voltage when VPA1 voltage is 0.4 to 3.45 V	4.8 V or more
P2127:	
VPA2 voltage when VPA1 voltage is 0.04 V or more	1.2 V or less
P2128:	
VPA2 voltage when VPA1 voltage is 0.4 to 3.45 V	4.8 V or more
P2138:	
Either of the following condition is met:	Condition 1 or 2
1. Difference between VPA1 and VPA2 voltage	0.02 V or less
2. Both of the following conditions are met:	(a) and (b)
(a) VPA1 voltage	0.4 V or less
(b) VPA2 voltage	1.2 V or less

COMPONENT OPERATING RANGE

Parameter	Standard Value
VPA voltage	More than 0.4 V and less than 4.8 V
VPA2 voltage	More than 1.2 V and Less than 4.8 V
Difference between VPA and VPA2 voltages	More than 0.02 V

WIRING DIAGRAM

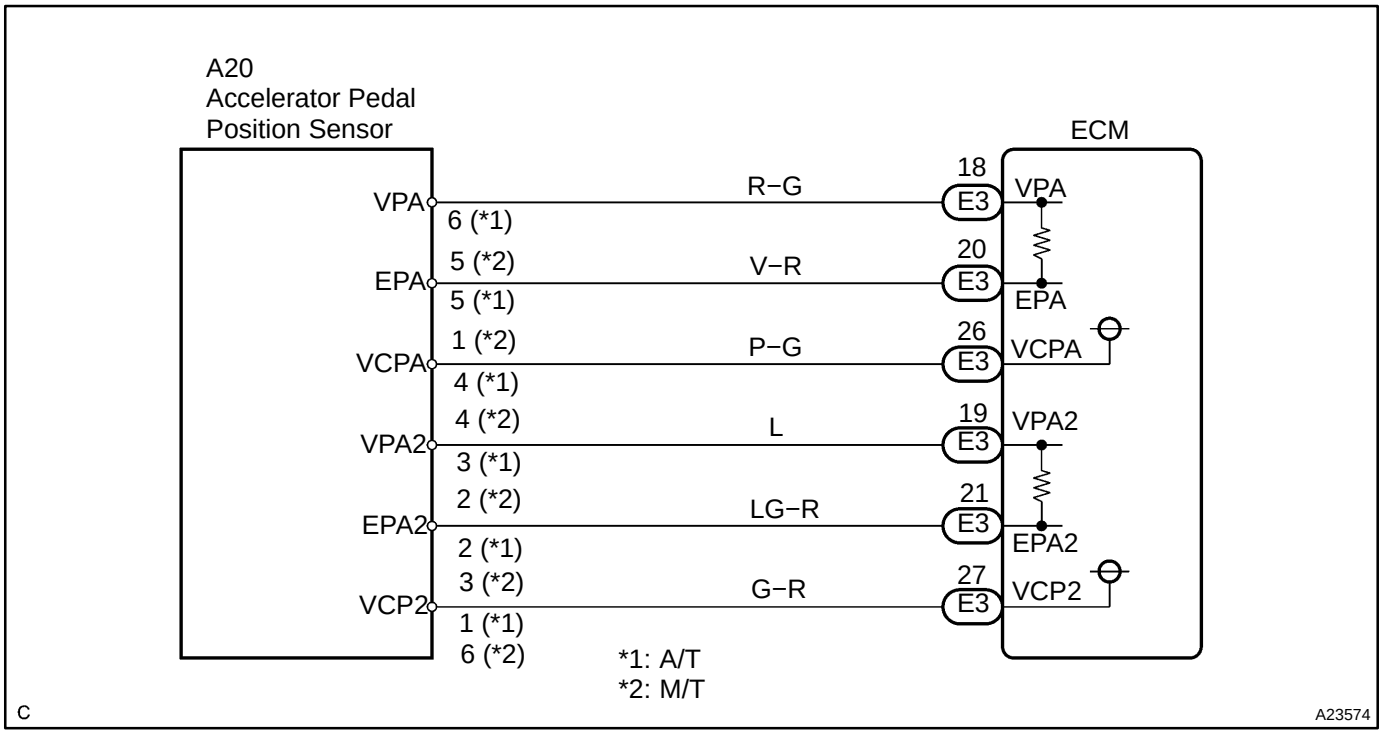

INSPECTION PROCEDURE

HINT:

Read freeze frame data using the hand−held tester. Freeze frame data records the engine conditions when a malfunction is detected. When troubleshooting, freeze frame data can help determine if the vehicle was running or stopped, if the engine was warmed up or not, if the air−fuel ratio was lean or rich, as well as other data from the time when a malfunction occurred.

1	**Connect hand−held tester, and read the voltage for accelerator pedal position sensor data.**

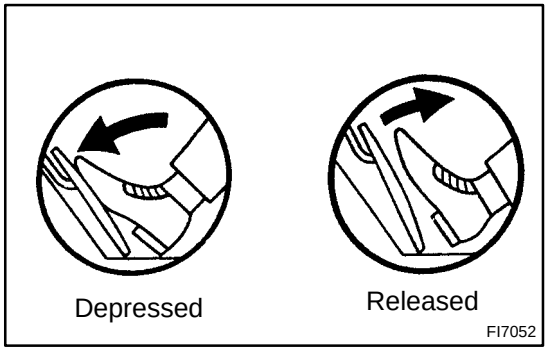

PREPARATION:

(a) Connect the hand−held tester to the DLC3.

(b) Turn the ignition switch to ON and push the hand−held tester main switch ON.

(c) Enter the following menu: DIAGNOSIS / ENHANCED OBD II / DATA LIST / ETCS / ACCEL POS #1 and ACCEL POS #2.

CHECK:

Read the voltage for the accelerator pedal position sensor data.

OK:

Standard:

Accelerator pedal	ACCEL POS #1	ACCEL POS #2
Released	0.5 to 1.1 V	1.2 to 2.0 V
Depressed	2.6 to 4.5 V	3.4 to 5.3 V

OK	**Go to step 5.**

NG

2	**Check for open and short in harness and connector in VCPA, VCP2, VPA, VPA2 EPA and EPA2 circuit between ECM and accelerator pedal position sensor.**

Wire Harness Side:
Accelerator Pedal Position Sensor (M/T)

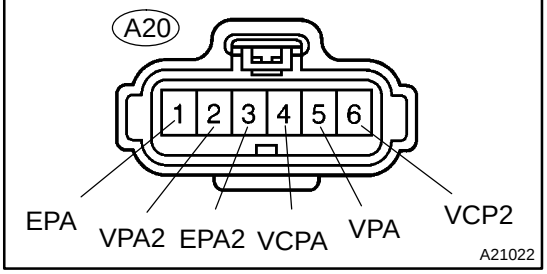

Wire Harness Side:
Accelerator Pedal Position Sensor (A/T)

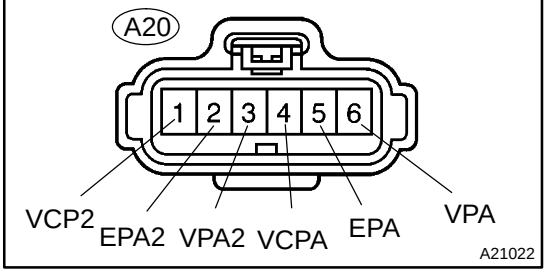

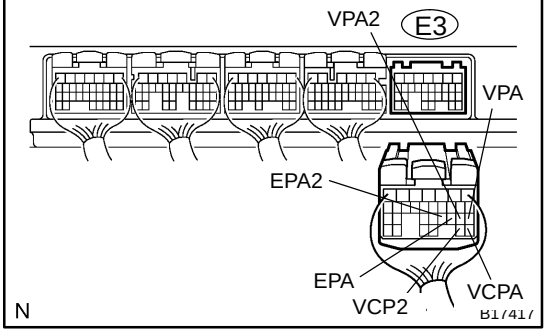

PREPARATION:

(a) Disconnect the A20 accelerator pedal position sensor connector.

(b) Disconnect the E3 ECM connector.

CHECK:

Measure the resistance between the wire harness side connectors.

OK:

Standard:

Tester Connection	Specified Condition
VPA (A20−5) − VPA (E3−18)*1	Below 1 Ω
VPA (A20−6) − VPA (E3−18)*2	Below 1 Ω
EPA (A20−1) − EPA (E3−20)*1	Below 1 Ω
EPA (A20−5) − EPA (E3−20)*2	Below 1 Ω
VCPA (A20−4) − VCPA (E3−26)	Below 1 Ω
VPA2 (A20−2) − VPA2 (E3−19)*1	Below 1 Ω
VPA2 (A20−3) − VPA2 (E3−19)*2	Below 1 Ω
EPA2 (A20−3) − EPA2 (E3−21)*1	Below 1 Ω
EPA2 (A20−2) − EPA2 (E3−21)*2	Below 1 Ω
VCP2 (A20−6) − VCP2 (E3−27)*1	Below 1 Ω
VCP2 (A20−1) − VCP2 (E3−27)*2	Below 1 Ω
VPA (A20−5) or VPA (E3−18) − Body ground*1	10 kΩ or higher
VPA (A20−6) or VPA (E3−18) − Body ground*2	10 kΩ or higher
EPA (A20−1) or EPA (E3−20) − Body ground*1	10 kΩ or higher
EPA (A20−5) or EPA (E3−20) − Body ground*2	10 kΩ or higher
VCPA (A20−4) or VCPA (E3−26) − Body ground	10 kΩ or higher
VPA2 (A20−2) or VPA2 (E3−19) − Body ground*1	10 kΩ or higher
VPA2 (A20−3) or VPA2 (E3−19) − Body ground*2	10 kΩ or higher
EPA2 (A20−3) or EPA2 (E3−21) − Body ground*1	10 kΩ or higher
EPA2 (A20−2) or EPA2 (E3−21) − Body ground*2	10 kΩ or higher
VCP2 (A20−6) or VCP2 (E3−27) − Body ground*1	10 kΩ or higher
VCP2 (A20−1) or VCP2 (E3−27) − Body ground*2	10 kΩ or higher

*1: M/T

*2: A/T

NG → **Repair or replace harness and connector.**

OK

3	**Check voltage between terminals VCPA and EPA, and VCP2 and EPA2 of ECM terminals.**

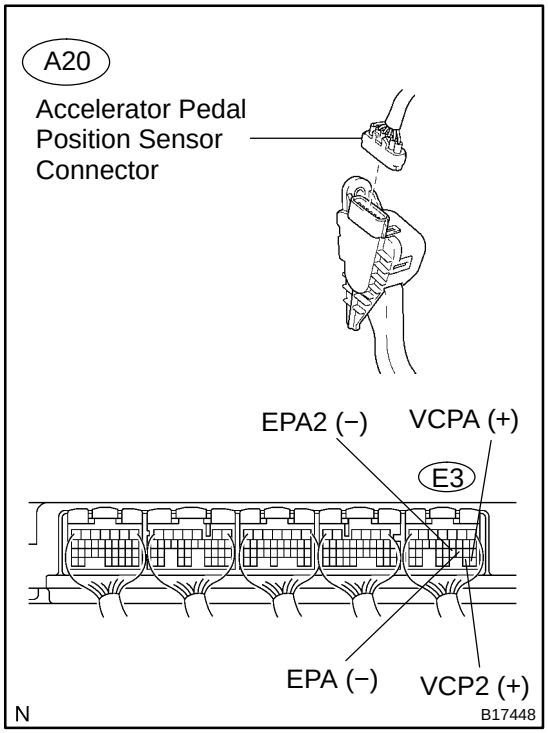

PREPARATION:

(a) Disconnect the A20 accelerator pedal position sensor connector.

(b) Turn the ignition switch to ON.

CHECK:

Measure the voltage between the specified terminals of the E3 ECM connector.

OK:

Standard:

Tester Connection	Specified Condition
VCPA (E3−26) − EPA (E3−20)	4.5 to 5.5 V
VCP2 (E3−27) − EPA2 (E3−21)	4.5 to 5.5 V

NG → **Replace ECM (See page SF−66).**

OK

4	**Replace accelerator pedal assembly.**

NEXT

5	**Check whether DTC output recurs (DTC P2120, P2122, P2123, P2125, P2127, P2128 or P2138)**

PREPARATION:

(a) Connect the hand−held tester to the DLC3.
(b) Disconnect the battery terminals or remove the EFI No. 1 fuse and ETCS fuse (Clear DTCs).
(c) Start the engine.
(d) Drive the engine at idle for 15 seconds or more.
(e) On the hand−held tester, select the following menu items: DIAGNOSIS / ENHANCED OBD II / DTC INFO / PENDING CODES.

CHECK:

Read the DTC output.

RESULT:

Display (DTC Output)	Proceed To
P2120, P2122, P2123,P2125, P2127, P2128 or P2138	A
No output	B

B → **System is OK.**

A

Replace ECM (See page SF−66).

DIDU5−01

DTC	P2195	Oxygen (A/F) Sensor Signal Stuck Lean (Bank 1 Sensor 1)

DTC	P2196	Oxygen (A/F) Sensor Signal Stuck Rich (Bank 1 Sensor 1)

DTC	P2197	Oxygen (A/F) Sensor Signal Stuck Lean (Bank 2 Sensor 1)

DTC	P2198	Oxygen (A/F) Sensor Signal Stuck Rich (Bank 2 Sensor 1)

HINT:

- Although the DTC titles say oxygen sensor, these DTCs relate to the Air−Fuel Ratio (A/F) sensor.
- Sensor 1 refers to the sensor mounted in front of the Three−Way Catalytic Converter (TWC) and located near the engine assembly.

CIRCUIT DESCRIPTION

The A/F sensor generates a voltage* that corresponds to the actual air−fuel ratio. This sensor voltage is used to provide the ECM with feedback so that it can control the air−fuel ratio. The ECM determines the deviation from the stoichiometric air−fuel ratio level, and regulates the fuel injection time. If the A/F sensor malfunctions, the ECM is unable to control the air−fuel ratio accurately.

The A/F sensor is the planar type and is integrated with the heater, which heats the solid electrolyte (zirconia element). This heater is controlled by the ECM. When the intake air volume is low (the exhaust gas temperature is low), a current flows into the heater to heat the sensor, in order to facilitate accurate air−fuel ratio detection. In addition, the sensor and heater portions are narrower than the conventional type. The heat generated by the heater is conducted to the solid electrolyte though the alumina, therefore the sensor activation is accelerated.

In order to obtain a high purification rate of the carbon monoxide (CO), hydrocarbon (HC) and nitrogen oxide (NOx) components in the exhaust gas, a TWC is used. For the most efficient use of the TWC, the air−fuel ratio must be precisely controlled so that it is always close to the stoichiometric level.

*: Value changes inside the ECM. Since the A/F sensor is the current output element, a current is converted to a voltage inside the ECM. Any measurements taken at the A/F sensor or ECM connectors will show a constant voltage.

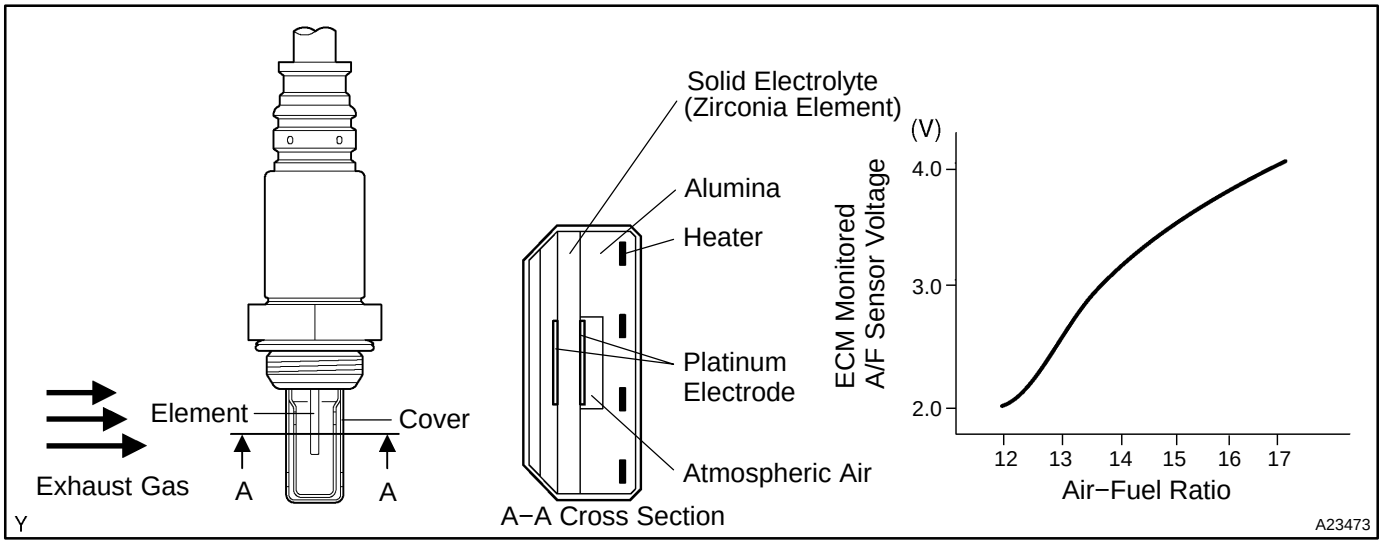

DTC No.	DTC Detection Conditions	Trouble Areas
P2195 P2197	While fuel−cut operation performing (during vehicle deceleration), air−fuel ratio sensor current is 3.6 mA or more for 3 seconds.	• A/F sensor (sensor 1) • ECM
P2196 P2198	While fuel−cut operation performing (during vehicle deceleration), air−fuel ratio sensor current is less than 1.4 mA for 3 seconds.	• A/F sensor (sensor 1) • ECM

HINT:

- When any of these DTCs are set, check the A/F sensor voltage output by selecting the following menu items on a hand−held tester: DIAGNOSIS / ENHANCED OBD II / DATA LIST / ALL / AFS B1S1.
- Short−term fuel trim values can also be read using a hand−held tester.

MONITOR DESCRIPTION

A rich air−fuel mixture causes a low air−fuel ratio sensor current, and a lean air fuel mixture causes a high air fuel ratio sensor current. Therefore, the sensor output becomes high during acceleration, and the sensor becomes low during deceleration.

The ECM monitors the air−fuel ratio sensor current during fuel−cut and detects an unusual current value. If the cumulative time the sensor output is out of range exceeds more than 3 seconds, the ECM interprets a malfunction in the air−fuel ratio sensor and sets a DTC.

Air−fuel Ratio Sensor Current Monitor:

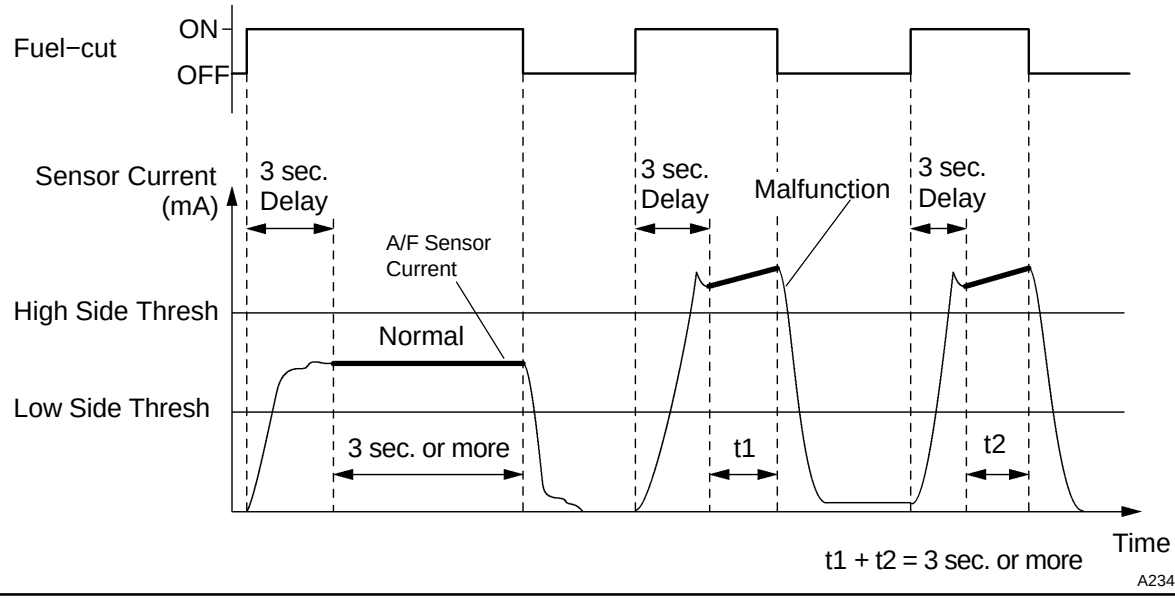

MONITOR STRATEGY

Related DTCs	P2195	A/F sensor (Bank 1) signal stuck lean
		A/F sensor (Bank 1) current (high side)
	P2196	A/F sensor (Bank 1) signal stuck rich
		A/F sensor (Bank 1) current (low side)
	P2197	A/F sensor (Bank 2) signal stuck lean
		A/F sensor (Bank 2) current (high side)
	P2198	A/F sensor (Bank 2) signal stuck rich
		A/F sensor (Bank 2) current (low side)
Required sensors/components	A/F sensor	
Frequency of operation	Continuous	
Duration	10 sec.: A/F sensor signal stuck lean/rich 3 sec.: A/F sensor current (high/low side)	
MIL operation	2 driving cycles	
Sequence of operation	None	

TYPICAL ENABLING CONDITIONS

Item	Specification	
	Minimum	Maximum
The monitor will run whenever these DTCs are not present	See page DI−18	
P2195, P2197 (A/F sensor signal stuck lean):		
Duration while all of following conditions met	2 sec.	−
Rear HO2S voltage	0.15 V	−
Time after engine start	30 sec.	−
A/F sensor status	Activated	
Fuel system status	Closed−loop	
Engine	Running	
P2196, P2198 (A/F sensor signal stuck rich):		
Duration while all of following conditions met	2 sec.	−
Rear HO2S voltage	−	0.6 V
Time after engine start	30 sec.	−
A/F sensor status	Activated	
Fuel system status	Closed−loop	
Engine	Running	
P2195, P2197 (A/F sensor current (High side)):		
Battery voltage	11 V	−
ECT	75°C (167°F)	−
Atmospheric pressure/760 mmHg	0.75	−
A/F sensor status	Activated	
Continuous time of fuel−cut	3 to 10 sec.	
P2196, P2198 (A/F sensor current (Low side)):		
Battery voltage	11 V	−
ECT	75°C (167°F)	−
Atmospheric pressure/760 mmHg	0.75	−
A/F sensor status	Activated	
Continuous time of fuel−cut	3 to 10 sec.	

TYPICAL MALFUNCTION THRESHOLDS

Detection Criteria	Threshold
P2195, P2197 (A/F sensor signal stuck lean):	
A/F sensor voltage	More than 3.8 V
P2196, P2198 (A/F sensor signal stuck rich):	
A/F sensor voltage	Less than 2.8 V
P2195, P2197 (A/F sensor current (High side)):	
A/F sensor current	3.6 mA or more
P2196, P2198 (A/F sensor current (Low side)):	
A/F sensor current	Less than 1.57 mA

MONITOR RESULT

Refer to page DI−26 for detailed information.

The test value and test limit information are described as shown in the following table. Check the monitor result and test values after performing the monitor drive pattern (see page DI−27).

- TID (Test Identification Data) is assigned to each emissions−related component.
- TLT (Test Limit Type):
  If TLT is 0, the component is malfunctioning when the test value is higher than the test limit.
  If TLT is 1, the component is malfunctioning when the test value is lower than the test limit.
- CID (Component Identification Data) is assigned to each test value.
- Unit Conversion is used to calculate the test value indicated on generic OBD ll scan tools.

TID $06: A/F sensor (Active A/F control method)

TLT	CID	Unit Conversion	Description of Test Data	Description of Test Limit
1	$01	Multiply by 0.0003 (V)	Cumulative A/F sensor locus length (Bank 1)	Lower malfunction criterion for A/F sensor
0	$01	Multiply by 0.0003 (V)	Cumulative A/F sensor locus length (Bank 1)	Upper malfunction criterion for A/F sensor
1	$11	Multiply by 0.0003 (V)	Cumulative A/F sensor locus length (Bank 2)	Lower malfunction criterion for A/F sensor
0	$11	Multiply by 0.0003 (V)	Cumulative A/F sensor locus length (Bank 2)	Upper malfunction criterion for A/F sensor
1	$02	Multiply by 0.000039 (A)	A/F sensor current (Bank 1)	Lower malfunction criterion for A/F sensor
0	$02	Multiply by 0.000039 (A)	A/F sensor current (Bank 1)	Upper malfunction criterion for A/F sensor
1	$12	Multiply by 0.000039 (A)	A/F sensor current (Bank 2)	Lower malfunction criterion for A/F sensor
0	$12	Multiply by 0.000039 (A)	A/F sensor current (Bank 2)	Upper malfunction criterion for A/F sensor

WIRING DIAGRAM

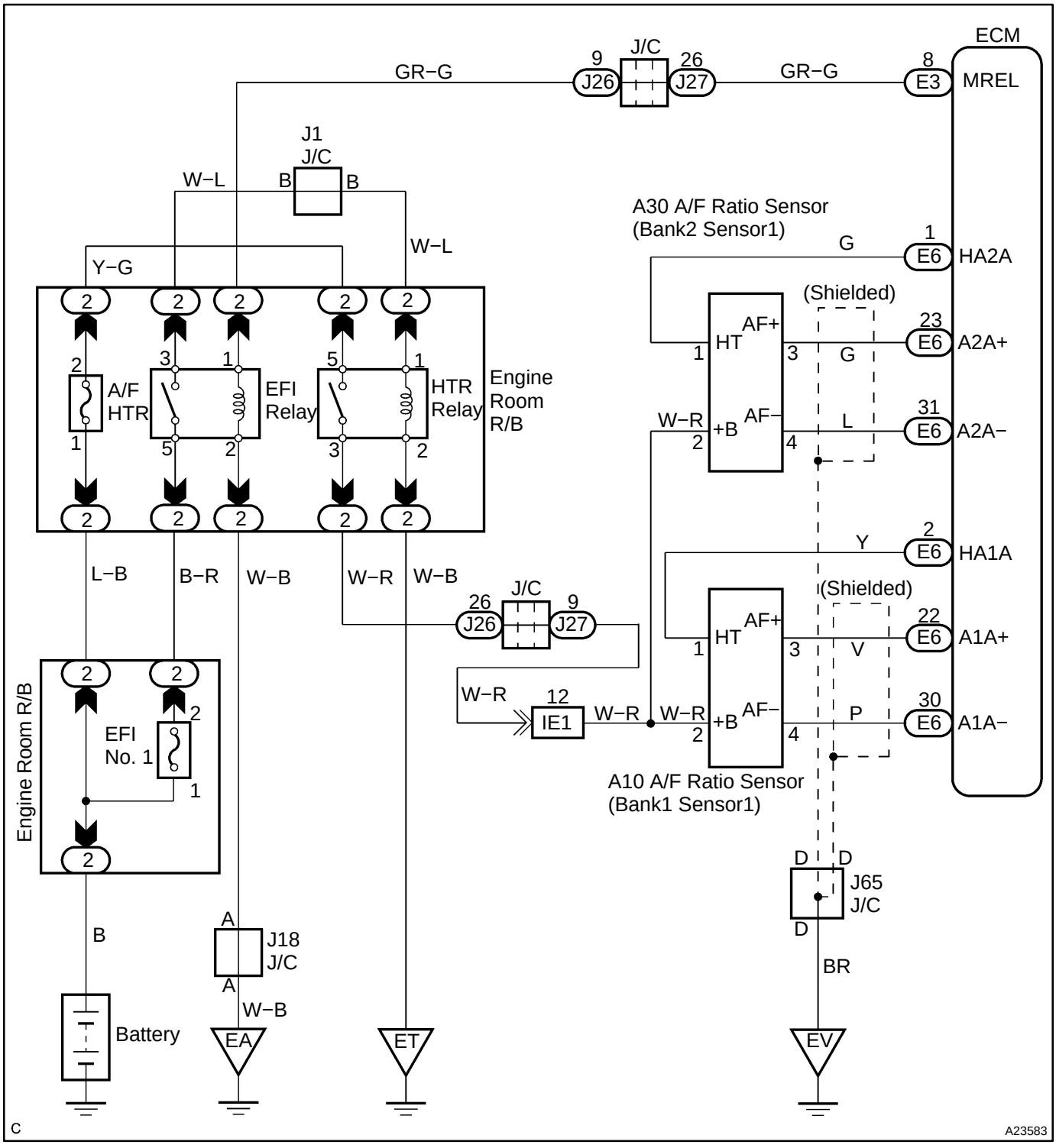

CONFIRMATION DRIVING PATTERN

HINT:

This confirmation driving pattern is used in steps 2, 4, 7, 17 and 21 of the following diagnostic troubleshooting procedure when using a hand−held tester.

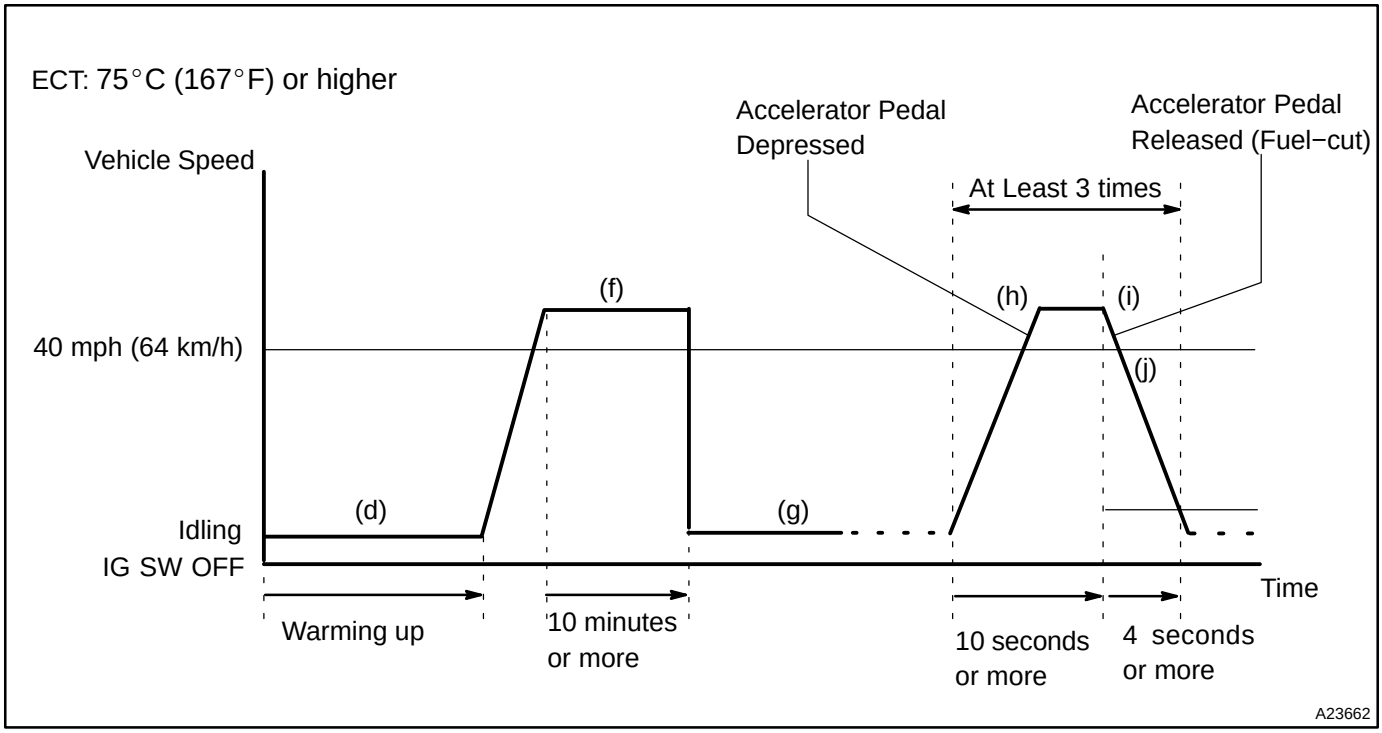

(a) Connect the hand−held tester to DLC3.
(b) Turn the ignition switch to ON and turn the tester ON.
(c) Clear DTC (See page DI−42).
(d) Start the engine, and warm it up until the ECT reaches 75°C (167°F) or higher.
(e) On the hand−held tester, select the following menu items: DIAGNOSIS/ENHANCED OBD II/DATA LIST/FC IDL.
(f) Drive the vehicle at 40 mph (64 km/h) or more for at least 10 minutes.
(g) Change the transmission to 2nd gear.
(h) Drive the vehicle at proper vehicle speed to perform fuel−cut operation.

HINT:

Fuel−cut is performed under following conditions met:

- Accelerator pedal fully released.
- Engine speed 2,500 rpm or more (fuel injection returns at 1,000 rpm).

(i) Accelerate the vehicle to 30 mph (48 km/h) or more by depressing the accelerator pedal for at least 10 seconds.
(j) Soon after performing step (8) above, release the accelerator pedal for at least 4 seconds without depressing the brake pedal, in order to execute fuel−cut control.
(k) Stop the vehicle and allow the engine to idle for 10 seconds or more.
(l) Allow the vehicle to decelerate until the vehicle speed declines to less than 6 mph (10 km/h).
(m) Repeat steps from (8) through (10) above at least 3 times in one driving cycle.

HINT:

Completing all A/F sensor monitors are required to change the value in TEST RESULT.

CAUTION:

Strictly observe of posted speed limits, traffic laws, and road conditions when performing these drive pattern.

INSPECTION PROCEDURE

HINT:

Malfunctioning areas can be identified by performing the A/F CONTROL function provided in the ACTIVE TEST. The A/F CONTROL function can help to determine whether the Air−Fuel Ratio (A/F) sensor, Heated Oxygen (HO2) sensor and other potential trouble areas are malfunctioning.

The following instructions describe how to conduct the A/F CONTROL operation using a hand−held tester.

(1) Connect a hand−held tester to the DLC3.
(2) Start the engine and turn the tester ON.
(3) Warm up the engine at an engine speed of 2,500 rpm for approximately 90 seconds.
(4) On the tester, select the following menu items: DIAGNOSIS / ENHANCED OBD II / ACTIVE TEST / A/F CONTROL.
(5) Perform the A/F CONTROL operation with the engine in an idling condition (press the RIGHT or LEFT button to change the fuel injection volume).
(6) Monitor the voltage outputs of the A/F and HO2 sensors (AFS B1S1 (AFS B2S1) and OS2 B1S2 (O2S B2S2)) displayed on the tester.

HINT:

- The A/F CONTROL operation lowers the fuel injection volume by 12.5 % or increases the injection volume by 25 %.
- Each sensor reacts in accordance with increases and decreases in the fuel injection volume.

Standard:

Tester Display (Sensor)	Injection Volumes	Status	Voltages
AFS B1S1 (AFS B2S1) (A/F)	+25 %	Rich	Less than 3.0
AFS B1S1 (AFS B2S1) (A/F)	−12.5 %	Lean	More than 3.35
O2S B1S2 (O2S B2S2) (HO2)	+25 %	Rich	More than 0.55
O2S B1S2 (O2S B2S2) (HO2)	−12.5 %	Lean	Less than 0.4

NOTICE:
The Air−Fuel Ratio (A/F) sensor has an output delay of a few seconds and the Heated Oxygen (HO2) sensor has a maximum output delay of approximately 20 seconds.

Case	A/F Sensor (Sensor 1) Output Voltage	HO2 Sensor (Sensor 2) Output Voltage	Main Suspected Trouble Areas
1	Injection volume +25 % −12.5 % Output voltage More than 3.35 V Less than 3.0 V **OK**	Injection volume +25 % −12.5 % Output voltage More than 0.55 V Less than 0.4V **OK**	—
2	Injection volume +25 % −12.5 % Output voltage Almost no reaction **NG**	Injection volume +25 % −12.5 % Output voltage More than 0.55 V Less than 0.4V **OK**	● A/F sensor ● A/F sensor heater ● A/F sensor circuit
3	Injection volume +25 % −12.5 % Output voltage More than 3.35 V Less than 3.0V **OK**	Injection volume +25 % −12.5 % Output voltage Almost no reaction **NG**	● HO2 sensor ● HO2 sensor heater ● HO2 sensor circuit
4	Injection volume +25 % −12.5 % Output voltage Almost no reaction **NG**	Injection volume +25 % −12.5 % Output voltage Almost no reaction **NG**	● Injector ● Fuel pressure ● Gas leakage from exhaust system (Air−fuel ratio extremely lean or rich)

- Following the A/F CONTROL procedure enables technicians to check and graph the voltage outputs of both the A/F and HO2 sensors.
- To display the graph, select the following menu items on the tester: DIAGNOSIS / ENHANCED OBD II / ACTIVE TEST / A/F CONTROL / USER DATA / AFS B1S1 and O2S B1S2, and press the YES button and then the ENTER button followed by the F4 button.

HINT:

- Read freeze frame data using a hand−held tester or OBD II scan tool. Freeze frame data record the engine condition when malfunctions are detected. When troubleshooting, freeze frame data can help determine if the vehicle was moving or stationary, if the engine was warmed up or not, if the air−fuel ratio was lean or rich, and other data, from the time the malfunction occurred.
- A low A/F sensor voltage could be caused by a rich air−fuel mixture. Check for conditions that would cause the engine to run rich.
- A high A/F sensor voltage could be caused by a lean air−fuel mixture. Check for conditions that would cause the engine to run lean.

1	**Check any other DTCs output (in addition to DTC P2195, P2196, P2197 or P2198).**

PREPARATION:

(a) Connect a hand−held tester to the DLC3.
(b) Turn the ignition switch to ON and turn the tester ON.
(c) Select the following menu items: DIAGNOSIS / ENHANCED OBD II / DTC INFO / CURRENT CODES.

CHECK:

(a) Read DTCs.

Result:

Display (DTC Output)	Proceed To
P2195, P2196, P2197 or P2198	A
P2195, P2196, P2197 or P2198 and other DTCs	B

HINT:
If any DTCs other than P2195, P2196, P2197 or P2198 are output, troubleshoot those DTCs first.

B → **Go to DTC chart (See page DI−57).**

A

2	**Check A/F sensor output current.**

PREPARATION:

(a) Connect a hand−held tester to the DLC3.
(b) Turn the ignition switch to ON and turn the tester ON.
(c) Clear DTC (See page DI−42).
(d) On the hand−held tester, select the following menu items: DIAGNOSIS/ENHANCED OBD II/MONITOR INFO/MONITOR STATUS.
(e) Check that the status of O2S MON is COMPL.
(f) On the hand−held tester, select the following menu items: DIAGNOSIS/ENHANCED OBD II/MONITOR INFO/TEST RESULT/RANGE BISI and B2S1.
(g) Check the test value of the air−fuel ratio sensor output current during fuel−cut.

RESULT:

Test Value	Proceed to
Out of normal range (1.4 mA or more, and less than 3.6 mA)	A
Within normal range (Less than 1.4 mA, or 3.6 mA or more)	B

B → **Go to step 20.**

A

3	Read value output voltage of A/F sensor.

PREPARATION:

(a) Connect the OBD II scan tool to the DLC3.
(b) Start the engine and turn the scan tool ON.
(c) Warm up the Air−Fuel Ratio (A/F) sensor at an engine speed of 2,500 rpm for 90 seconds.

CHECK:

(a) Using the scan tool, check the A/F sensor voltage 3 times, once when the engine is in each of the following conditions:
  (1) While idling (check for at least 30 seconds)
  (2) At an engine speed of approximately 2,500 rpm (without any sudden changes in engine speed)
  (3) Raise the engine speed to 4,000 rpm and then quickly release the accelerator pedal so that the throttle valve is fully closed.

  Standard:

Conditions	A/F Sensor Voltage Variations	Reference
(1) and (2)	Changes at approx 0.66 V	Between 0.62 V and 0.7 V
(3)	Increases to 0.76 V or more	This occurs during engine deceleration (when fuel−cut performed)

For more information, see the diagrams below.

Normal Condition:

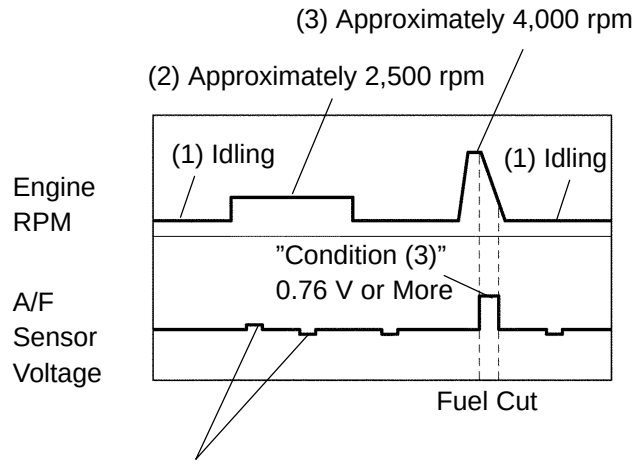

Malfunction Condition:

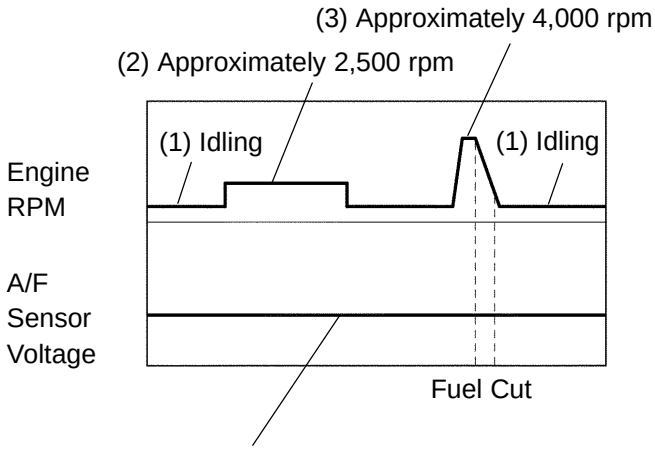

B17393

HINT:

- If the output voltage of the A/F sensor remains at approximately 0.66 V (see Malfunction Condition diagram) under any conditions, including those above, the A/F sensor may have an open circuit. (This will also happen if the A/F sensor heater has an open circuit.)
- If the output voltage of the A/F sensor remains at either approximately 0.76 V or more, or 0.56 V or less (see Malfunction Condition diagram) under any conditions, including those above, the A/F sensor may have a short circuit.
- The ECM stops fuel injection (fuel cut) during engine deceleration. This causes a lean condition and results in a momentary increase in the A/F sensor output voltage.

- The ECM must establish a closed throttle valve position learning value to perform fuel cut. If the battery terminal has been reconnected, the vehicle must be driven over 10 mph (16 km/h) to allow the ECM to learn the closed throttle valve position.
- When the vehicle is driven:
  The output voltage of the A/F sensor may be below 0.56 V during fuel enrichment. For the vehicle, this translates to a sudden increase in speed with the accelerator pedal fully depressed when trying to overtake another vehicle. The A/F sensor is functioning normally.
- The A/F sensor is a current output element; therefore, the current is converted into a voltage inside the ECM. Measuring the voltage at the connectors of the A/F sensor or ECM will show a constant voltage result.

NG → **Go to step 9.**

OK

4	**Perform confirmation driving pattern.**

NEXT

5	**Check whether DTCoutput recurs (DTC P2195, P2196, P2197 or P2198)**

CHECK:

(a) On the hand−held tester, select the following menu items: DIAGNOSIS / ENHANCED OBD II / DTC INFO / CURRENT CODES.

(b) Read DTCs.

RESULT:

Display (DTC Output)	Proceed To
P2195, P2196, P2197 or P2198	A
No output	B

B → **Go to step 5.**

A

6	**Replace air fuel ratio sensor.**

NEXT

7	**Perform confirmation driving pattern.**

NEXT

8	**Check whether DTCoutput recurs (DTC P2195, P2196, P2197 or P2198)**

CHECK:

(a) On the hand−held tester, select the following menu items: DIAGNOSIS / ENHANCED OBD II / DTC INFO / CURRENT CODES.

(b) Read DTCs.

RESULT:

Display (DTC Output)	Proceed To
P2195, P2196, P2197 or P2198	A
No output	B

B → **Go to step 5.**

A

9	**Confirm whether vehicle has run out of fuel in past.**

NO → **Check for intermittent problems (See page DI−11).**

YES

DTC caused by running out of fuel.

10	Check resistance of air−fuel ratio (A/F) sensor heater.

Component Side:

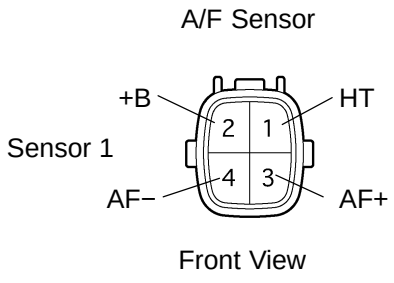

PREPARATION:

Disconnect the air−fuel ratio (A/F) sensor connector.

CHECK:

Measure resistance between the terminals of the A/F sensor connector.

OK:

Tester Connection	Specified Condition
HT (1) − +B (2)	Between 1.8 Ω and 3.4 Ω at 20°C (68°F)
HT (1) − AF− (4)	10 kΩ or higher

NG → **Replace air−fuel ratio (A/F) sensor.**

OK

11	Check A/F relay.

A/F Relay

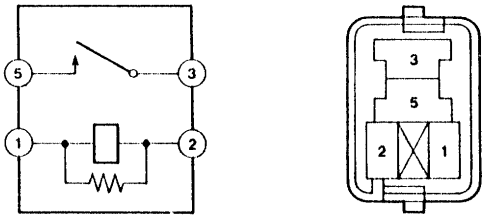

PREPARATION:

Remove the A/F relay from the engine room J/B.

CHECK:

Inspect the A/F relay.

OK:

Standard:

Terminal No.	Condition	Specified Condition
3 − 5	Always	10 KΩ or higher
3 − 5	Apply B+ between terminals 1 and 2	Below 1 Ω

NG → **Replace EFI relay.**

OK

12	**Check for open and short in harness and connector between ECM and A/F sensor.**

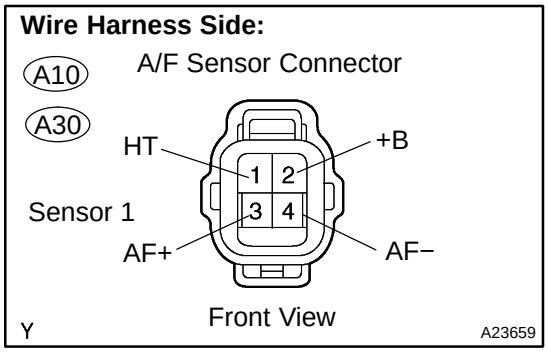

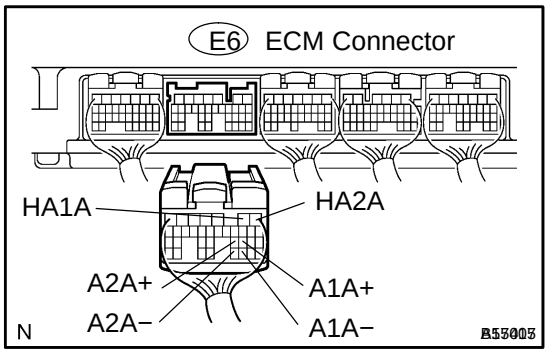

PREPARATION:

(a) Disconnect the A10 or A30 A/F sensor connector.

(b) Turn the ignition switch to ON.

CHECK:

(a) Measure the voltage between the +B terminal of the A/F sensor connector and body ground.

Standard:

Tester Connections	Specified Conditions
+B (2) − Body ground	Between 9 V and 14 V

PREPARATION:

(a) Turn the ignition switch to OFF.

(b) Disconnect the E6 ECM connector.

CHECK:

(a) Check the resistance.

Standard (Check for open):

Tester Connections	Specified Conditions
HT (A10−1) − HA1A (E6−2) HT (A30−1) − HA2A (E6−1)	Below 1 Ω
AF+ (A10−3) − A1A+ (E6−22) AF+ (A30−3) − A2A+ (E6−23)	Below 1 Ω
AF− (A10−4) − A1A− (E6−30) AF− (A30−4) − A2A− (E6−31)	Below 1 Ω

Standard (Check for short):

Tester Connections	Specified Conditions
HT (A10−1) or HA1A (E6−2) − Body ground HT (A30−1) or HA2A (E6−1) − Body ground	10 kΩ or higher
AF+ (A10−3) or A1A+ (E6−22) − Body ground AF+ (A30−3) or A2A+ (E6−23) − Body ground	10 kΩ or higher
AF− (A10−4) or A1A− (E6−30) − Body ground AF− (A30−4) or A2A− (E6−31) − Body ground	10 kΩ or higher

Reference (Bank 1 Sensor 1 System Drawing):

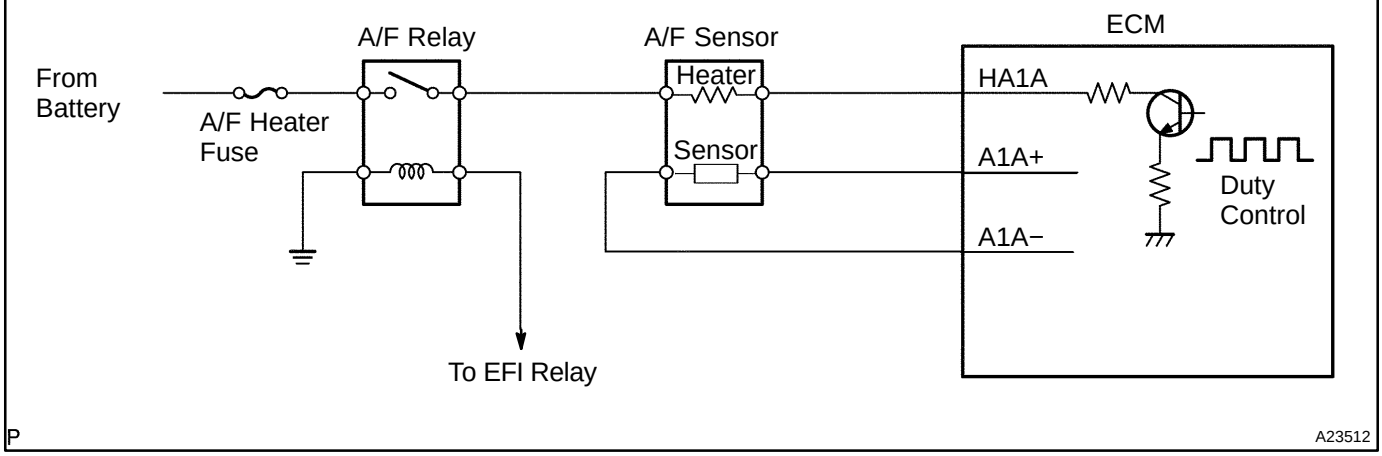

NG → Replace or replace harness or connector.

OK

13	Check air induction system (See page SF−1).

CHECK:
Check the air induction system for vacuum leaks.

NG → Repair or replace air induction system.

OK

14	Check fuel pressure (See page SF−5).

CHECK:
Check the fuel pressure (high or low pressure).

NG → Check and replace fuel pump, pressure regulator, fuel pipe line and filter (See page SF−1).

OK

15	Check injector injection (See page SF−26).

NG → Replace injector.

OK

16	**Replace air fuel ratio sensor.**

NEXT

17	**Perform confirmation driving pattern.**

NEXT

18	**Check whether DTCoutput recurs (DTC P2195, P2196, P2197 or P2198)**

CHECK:

(a) On the hand−held tester, select the following menu items: DIAGNOSIS / ENHANCED OBD II / DTC INFO / PENDING CODES.

(b) Read DTCs.

RESULT:

Display (DTC Output)	Proceed To
P2195, P2196, P2197 or P2198	A
No output	B

B → **Replace ECM (See page SF−66) and perform confirmation driving pattern.**

A

19	**Confirm whether vehicle has run out of fuel in past.**

NO → **Check for intermittent problems (See page DI−11).**

YES

DTC caused by running out of fuel.

20	**Replace air fuel ratio sensor.**

NEXT

21	**Perform confirmation driving pattern.**

NEXT

22	**Check whether DTC output recurs (DTC P2195, P2196, P2197 or P2198)**

CHECK:

(a) On the hand−held tester, select the following menu items: DIAGNOSIS / ENHANCED OBD II / DTC INFO / PENDING CODES.

(b) Read DTCs.

RESULT:

Display (DTC Output)	Proceed To
P2195, P2196, P2197 or P2198	A
No output	B

A → **Replace ECM (See page SF−66).**

B

END

DIDU6−01

DTC	P2238	Oxygen Sensor Pumping Current Circuit Low (For A/F Sensor)(Bank 1 Sensor1)

DTC	P2239	Oxygen Sensor Pumping Current Circuit High (For A/F Sensor)(Bank 1 Sensor1)

DTC	P2241	Oxygen Sensor Pumping Current Circuit Low (For A/F Sensor)(Bank 2 Sensor1)

DTC	P2242	Oxygen Sensor Pumping Current Circuit High (For A/F Sensor)(Bank 2 Sensor1)

DTC	P2252	Oxygen Sensor Reference Ground Circuit Low (For A/F Sensor)(Bank 1 Sensor1)

DTC	P2253	Oxygen Sensor Reference Ground Circuit High (For A/F Sensor)(Bank 1 Sensor1)

DTC	P2255	Oxygen Sensor Reference Ground Circuit Low (For A/F Sensor)(Bank 2 Sensor1)

DTC	P2256	Oxygen Sensor Reference Ground Circuit High (For A/F Sensor)(Bank 2 Sensor1)

HINT:

- Although the DTC titles say oxygen sensor, these DTCs relate to the Air−Fuel Ratio (A/F) sensor.
- Sensor 1 refers to the sensor mounted in front of the Three−Way Catalytic Converter (TWC) and located near the engine assembly.

CIRCUIT DESCRIPTION

Refer to DTC P2195 on page DI−312.

DTC No.	DTC Detection Conditions	Trouble Areas
P2238 P2241	• Case 1: Condition (a) or (b) continues for 5.0 seconds or more (1 trip detection logic): (a) AF+ voltage 0.5 V or less (b) (AF+) − (AF−) = 0.1 V or less • Case 2: A/F sensor admittance: Less than 0.022 1/Ω (1 trip detection logic)	• Open or short in A/F sensor (sensor 1) circuit • A/F sensor (sensor 1) • A/F sensor heater • EFI relay • A/F sensor heater and relay circuits • ECM
P2239 P2242	AF+ voltage more than 4.5 V for 5.0 seconds or more (1 trip detection logic)	• Open or short in A/F sensor (sensor 1) circuit • A/F sensor (sensor 1) • A/F sensor heater • EFI relay • A/F sensor heater and relay circuits • ECM
P2252 P2255	AF− voltage 0.5 V or less for 5.0 seconds or more (1 trip detection logic)	• Open or short in A/F sensor (sensor 1) circuit • A/F sensor (sensor 1) • A/F sensor heater • EFI relay • A/F sensor heater and relay circuits • ECM
P2253 P2256	AF− voltage more than 4.5 V for 5.0 seconds or more (1 trip detection logic)	• Open or short in A/F sensor (sensor 1) circuit • A/F sensor (sensor 1) • A/F sensor heater • EFI relay • A/F sensor heater and relay circuits • ECM

MONITOR DESCRIPTION

The Air−Fuel Ratio (A/F) sensor varies its output voltage in proportion to the air−fuel ratio. If the A/F sensor impedance (alternating current resistance) or voltage output deviates greatly from the standard range, the ECM determines that there is an open or short malfunction in the A/F sensor circuit.

MONITOR STRATEGY

Related DTCs	P2238	A/F sensor (Bank 1) open circuit between AF+ and AF−
		A/F sensor (Bank 1) short circuit between AF+ and AF−
		A/F sensor (Bank 1) short circuit between AF+ and GND
	P2239	A/F sensor (Bank 1) short circuit between AF+ and +B
	P2241	A/F sensor (Bank 2) open circuit between AF+ and AF−
		A/F sensor (Bank 2) short circuit between AF+ and AF−
		A/F sensor (Bank 2) short circuit between AF+ and GND
	P2242	A/F sensor (Bank 2) short circuit between AF+ and +B
	P2252	A/F sensor (Bank 1) short circuit between AF− and GND
	P2253	A/F sensor (Bank 1) short circuit between AF− and +B
	P2255	A/F sensor (Bank 2) short circuit between AF− and GND
	P2256	A/F sensor (Bank 2) short circuit between AF− and +B
Required sensors/components	A/F sensor	
Frequency of operation	Once per driving cycle	
Duration	10 sec.: A/F sensor open circuit between AF+ and AF− 5 sec.: Others	
MIL operation	2 driving cycles	
Sequence of operation	None	

TYPICAL ENABLING CONDITIONS

Item	Specification	
	Minimum	Maximum
The monitor will run whenever these DTCs are not present	See page DI−18	
P2238, P2241 (A/F sensor open circuit between AF+ and AF−):		
AF+ terminal voltage	0.5 to 4.5 V	
AF− terminal voltage	0.5 to 4.5 V	
Difference between AF+ terminal and AF− terminal voltage	0.1 to 0.8 V	
ECT	5°C (41°F)	−
Engine	Running	
Fuel−cut	OFF	
Time after fuel−cut OFF	5 sec.	−
A/F sensor heater	ON	
Time after A/F sensor heating	20 sec.	−
Battery voltage	11 V	−
Ignition switch	ON	
Time after ignition switch is OFF to ON	5 sec.	−
Others:		
Battery voltage	11 V	−
Ignition switch	ON	
Time after ignition switch is OFF to ON	5 sec.	−

TYPICAL MALFUNCTION THRESHOLDS

Detection Criteria	Threshold
P2238, P2241 (A/F sensor open circuit between AF+ and AF−):	
A/F sensor admittance	Bellow 0.022 1/ohm
P2238, P2241 (A/F sensor short circuit between AF+ and GND):	
A/F+ terminal voltage	0.5 V or less
P2238, P2241 (A/F sensor short circuit between AF+ and AF−):	
Difference between A/F+ terminal and AF− terminal voltage	0.1 V or less
P2239, P2242 (A/F sensor short circuit between AF+ and +B):	
A/F+ terminal voltage	More than 4.5 V
P2252, P2255 (A/F sensor short circuit between AF− and GND):	
A/F− terminal voltage	0.5 V or less
P2253, P225+ (A/F sensor short circuit between AF− and +B):	
A/F− terminal voltage	More than 4.5 V

WIRING DIAGRAM

Refer to DTC P2195 on page DI−312.

INSPECTION PROCEDURE

HINT:

Hand−held tester only:

Malfunctioning areas can be identified by performing the A/F CONTROL function provided in the ACTIVE TEST. The A/F CONTROL function can help to determine whether the Air−Fuel Ratio (A/F) sensor, Heated Oxygen (HO2) sensor and other potential trouble areas are malfunctioning.

The following instructions describe how to conduct the A/F CONTROL operation using a hand−held tester.

(1) Connect a hand−held tester to the DLC3.
(2) Start the engine and turn the tester ON.
(3) Warm up the engine at an engine speed of 2,500 rpm for approximately 90 seconds.
(4) On the tester, select the following menu items: DIAGNOSIS / ENHANCED OBD II / ACTIVE TEST / A/F CONTROL.
(5) Perform the A/F CONTROL operation with the engine in an idling condition (press the RIGHT or LEFT button to change the fuel injection volume).
(6) Monitor the voltage outputs of the A/F and HO2 sensors (AFS B1S1 (AFS B2S1) and OS2 B1S2 (O2S B2S2)) displayed on the tester.

HINT:

- The A/F CONTROL operation lowers the fuel injection volume by 12.5 % or increases the injection volume by 25 %.
- Each sensor reacts in accordance with increases and decreases in the fuel injection volume.

Standard:

Tester Display (Sensor)	Injection Volumes	Status	Voltages
AFS B1S1 (AFS B2S1) (A/F)	+25 %	Rich	Less than 3.0
AFS B1S1 (AFS B2S1) (A/F)	−12.5 %	Lean	More than 3.35
O2S B1S2 (O2S B2S2) (HO2)	+25 %	Rich	More than 0.55
O2S B1S2 (O2S B2S2) (HO2)	−12.5 %	Lean	Less than 0.4

NOTICE:

The Air−Fuel Ratio (A/F) sensor has an output delay of a few seconds and the Heated Oxygen (HO2) sensor has a maximum output delay of approximately 20 seconds.

- Following the A/F CONTROL procedure enables technicians to check and graph the voltage outputs of both the A/F and HO2 sensors.
- To display the graph, select the following menu items on the tester: DIAGNOSIS / ENHANCED OBD II / ACTIVE TEST / A/F CONTROL / USER DATA / AFS B1S1 and O2S B1S2, and press the YES button and then the ENTER button followed by the F4 button.

Case	A/F Sensor (Sensor 1) Output Voltage	HO2 Sensor (Sensor 2) Output Voltage	Main Suspected Trouble Areas
1	Injection volume +25 % −12.5 % Output voltage More than 3.35 V Less than 3.0 V **OK**	Injection volume +25 % −12.5 % Output voltage More than 0.55 V Less than 0.4V **OK**	—
2	Injection volume +25 % −12.5 % Output voltage Almost no reaction **NG**	Injection volume +25 % −12.5 % Output voltage More than 0.55 V Less than 0.4V **OK**	● A/F sensor ● A/F sensor heater ● A/F sensor circuit
3	Injection volume +25 % −12.5 % Output voltage More than 3.35 V Less than 3.0V **OK**	Injection volume +25 % −12.5 % Output voltage Almost no reaction **NG**	● HO2 sensor ● HO2 sensor heater ● HO2 sensor circuit
4	Injection volume +25 % −12.5 % Output voltage Almost no reaction **NG**	Injection volume +25 % −12.5 % Output voltage Almost no reaction **NG**	● Injector ● Fuel pressure ● Gas leakage from exhaust system (Air−fuel ratio extremely lean or rich)

HINT:

Read freeze frame data using a hand−held tester. Freeze frame data record the engine condition when malfunctions are detected. When troubleshooting, freeze frame data can help determine if the vehicle was moving or stationary, if the engine was warmed up or not, if the air−fuel ratio was lean or rich, and other data, from the time the malfunction occurred.

1	Check resistance of air−fuel ratio (A/F) sensor heater.

Component Side:

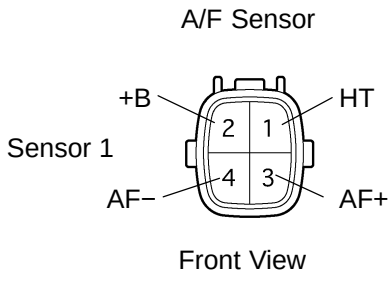

PREPARATION:

Disconnect the air−fuel ratio (A/F) sensor connector.

CHECK:

Measure resistance between the terminals of the A/F sensor connector.

OK:

Tester Connection	Specified Condition
HT (1) − +B (2)	1.8 Ω to 3.4 Ω at 20°C (68°F)
HT (1) − AF− (4)	10 kΩ or higher

NG → **Replace air−fuel ratio (A/F) sensor.**

OK

2	Check A/F relay.

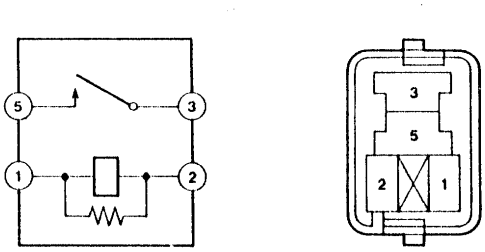

PREPARATION:

Remove the A/F relay from the engine room J/B.

CHECK:

Inspect the A/F relay.

OK:

Terminal No.	Condition	Specified Condition
3 − 5	Usually	10 kΩ or higher
3 − 5	Apply B+ between terminals 1 and 2	Below 1 Ω

NG → **Replace EFI relay.**

OK

3	**Check for open and short in harness and connector between ECM and A/F sensor.**

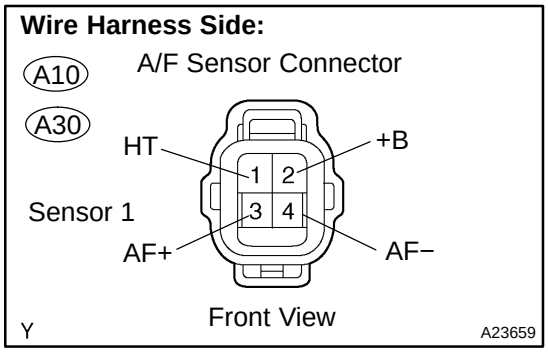

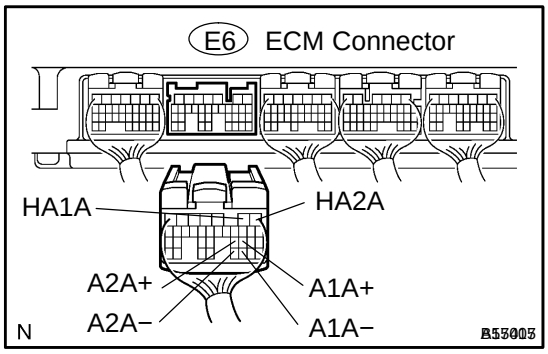

PREPARATION:

(a) Disconnect the A10 or A30 A/F sensor connector.

(b) Turn the ignition switch to ON.

CHECK:

(a) Measure the voltage between the +B terminal of the A/F sensor connector and body ground.

OK:

Standard:

Tester Connections	Specified Conditions
+B (2) − Body ground	9 V to 14 V

PREPARATION:

(a) Turn the ignition switch to OFF.

(b) Disconnect the E6 ECM connector.

CHECK:

(a) Check the resistance.

OK:

Standard (Check for open):

Tester Connections	Specified Conditions
HT (A10−1) − HA1A (E6−2) HT (A30−1) − HA2A (E6−1)	Below 1 Ω
AF+ (A10−3) − A1A+ (E6−22) AF+ (A30−3) − A2A+ (E6−23)	Below 1 Ω
AF− (A10−4) − A1A− (E6−30) AF− (A30−4) − A2A− (E6−31)	Below 1 Ω

Standard (Check for short):

Tester Connections	Specified Conditions
HT (A10−1) or HA1A (E6−2) − Body ground HT (A30−1) or HA2A (E6−1) − Body ground	10 kΩ or higher
AF+ (A10−3) or A1A+ (E6−22) − Body ground AF+ (A30−3) or A2A+ (E6−23) − Body ground	10 kΩ or higher
AF− (A10−4) or A1A− (E6−30) − Body ground AF− (A30−4) or A2A− (E6−31) − Body ground	10 kΩ or higher

Reference (Bank 1 Sensor 1 System Drawing):

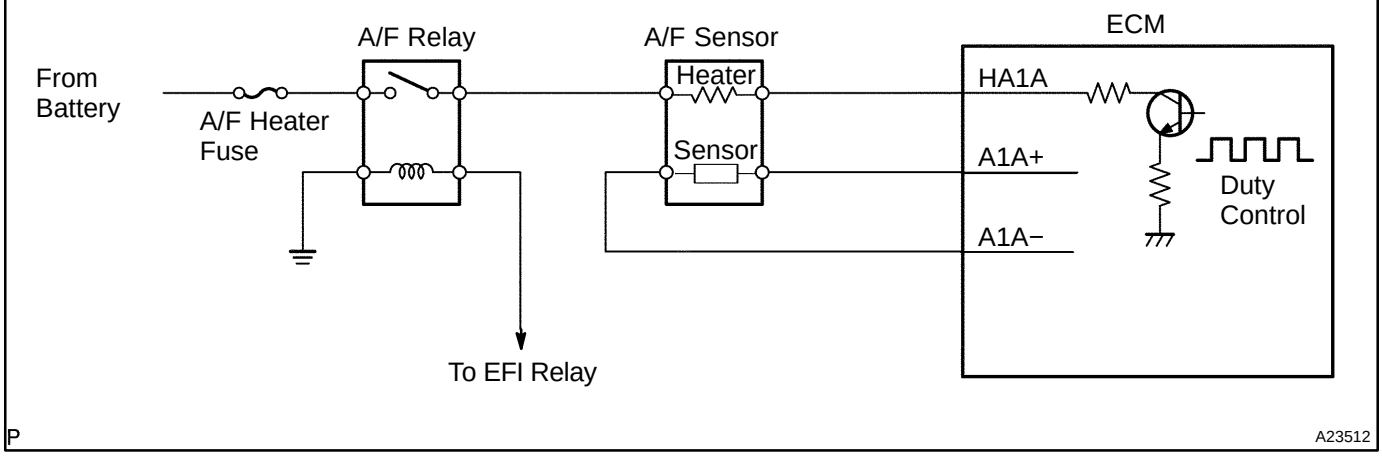

NG → **Replace or replace harness or connector.**

OK

Replace ECM (See page SF−66).

DIDU7−01

DTC	P2401	Evaporative Emission System Leak Detection Pump Control Circuit Low

DTC	P2402	Evaporative Emission System Leak Detection Pump Control Circuit High

CIRCUIT DESCRIPTION

Refer to EVAP Inspection Procedure (see page DI−368).

DTCs	Monitoring Item	DTC Detection Condition	Trouble Areas	Detection Timing	Detection Logic
P2401	Vacuum pump stuck OFF	One of following conditions are met: • 0.02 inch orifice low−flow • 0.02 inch orifice high−low • Vacuum pump ON stuck • Vacuum pump OFF stuck • Vent valve ON (Closed) stuck NOTE: P043E, P043F, P2401, P2402 and P2419 have same DTC detection conditions.	• Pump module • Connector / Wire harness (Pump module − ECM) • ECM	While ignition switch OFF	2 trips
P2402	Vacuum pump stuck ON				

WIRING DIAGRAM

Refer to EVAP Inspection Procedure (see page DI−368).

MONITOR DESCRIPTION

5 hours* after the ignition switch is turned OFF, the electric vacuum pump creates negative pressure (vacuum) in the EVAP (Evaporative Emission) system. The ECM monitors for leaks and actuator malfunctions based on the EVAP pressure.

HINT:

*: If the engine coolant temperature is not below 35°C (95°F) 5 hours after the ignition switch is turned off, the monitor check starts 2 hours later. If it is still not below 35°C (95°F) 7 hours after the ignition switch is turned off, the monitor check starts 2.5 hours later.

Sequence	Operations	Descriptions	Duration
−	ECM activation	Activated by soak timer, 5 hours (7 or 9.5 hours) after ignition switch turned to OFF.	−
A	Atmospheric pressure measurement	Vent valve turned OFF (vent) and EVAP system pressure measured by ECM in order to register atmospheric pressure. If EVAP pressure is not between 70 kPa and 110 kPa (525 mmHg and 825 mmHg), ECM cancels EVAP system monitor.	10 seconds
B	First 0.02 inch leak pressure measurement	In order to determine 0.02 inch leak pressure standard, vacuum pump creates negative pressure (vacuum) through 0.02 inch orifice and then ECM checks if vacuum pump and vent valve operate normally.	60 seconds
C	EVAP system pressure measurement	Vent valve turned ON (closed) to shut EVAP system. Negative pressure (vacuum) created in EVAP system, and EVAP system pressure then measured. Write down the measured value as it will be used in the leak check. If EVAP pressure does not stabilize within 15 minutes, ECM cancels EVAP system monitor.	15 minutes*
D	Purge VSV monitor	Purge VSV opened and then EVAP system pressure measured by ECM. Large increase indicates normal.	10 seconds
E	Second 0.02 inch leak pressure measurement	Leak check is performed after second 0.02 inch leak pressure standard is measured. If stabilized system pressure higher than second 0.02 inch leak pressure standard, ECM determines that EVAP system leaking.	60 seconds
F	Final check	Atmospheric pressure measured and then monitoring result recorded by ECM.	−

* If only a small amount of fuel is in the fuel tank, it takes longer for the EVAP pressure to stabilize.

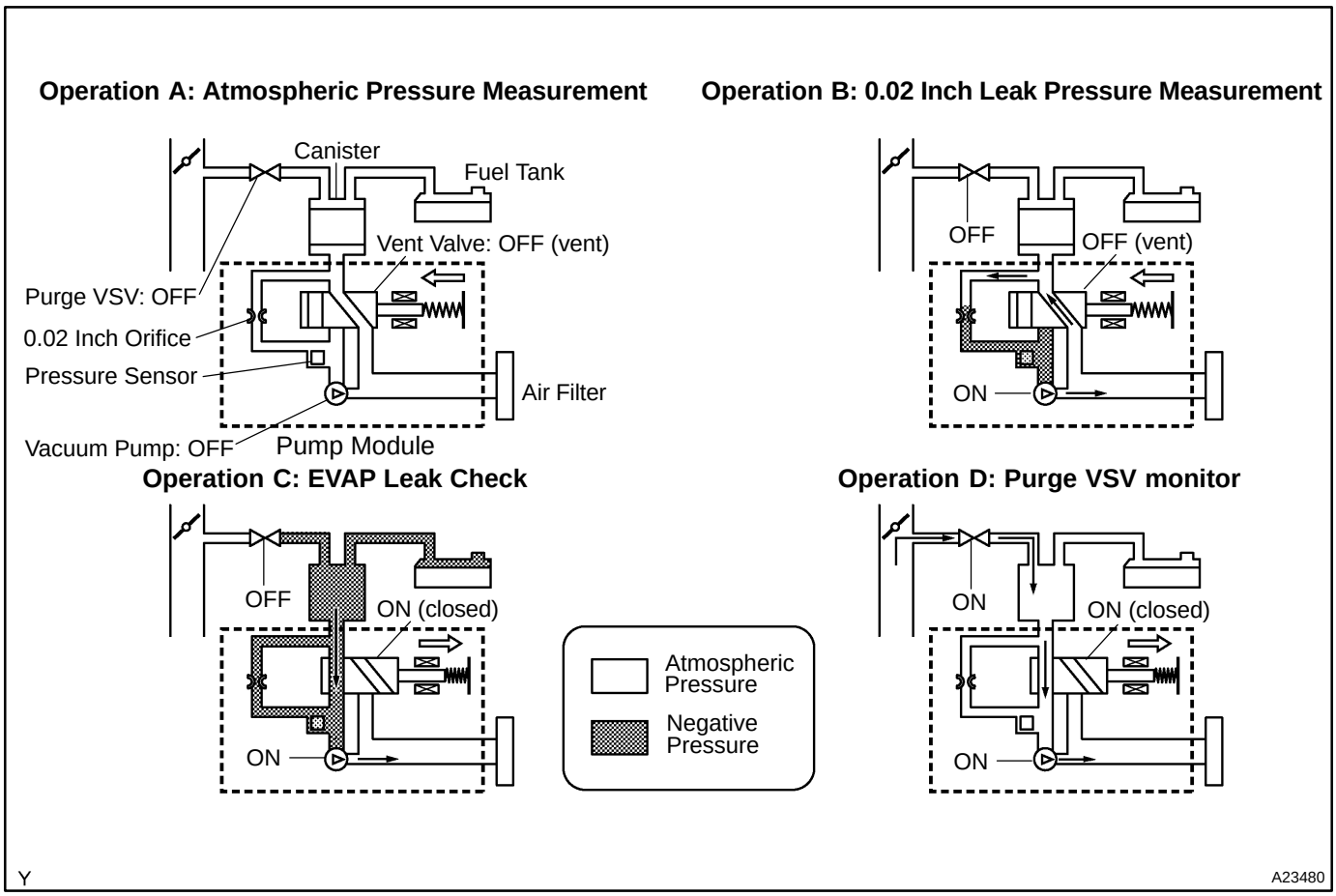

In sequence B and E, to determine the leak criterion, the vacuum pump creates negative pressure in the canister pump module through the 0.02 inch orifice. If the pressure is out of specified range or is not saturated, the ECM illuminates the MIL and sets DTCs P043E, P043F, P2401, P2402 and P2419 (2−trip detection logic).

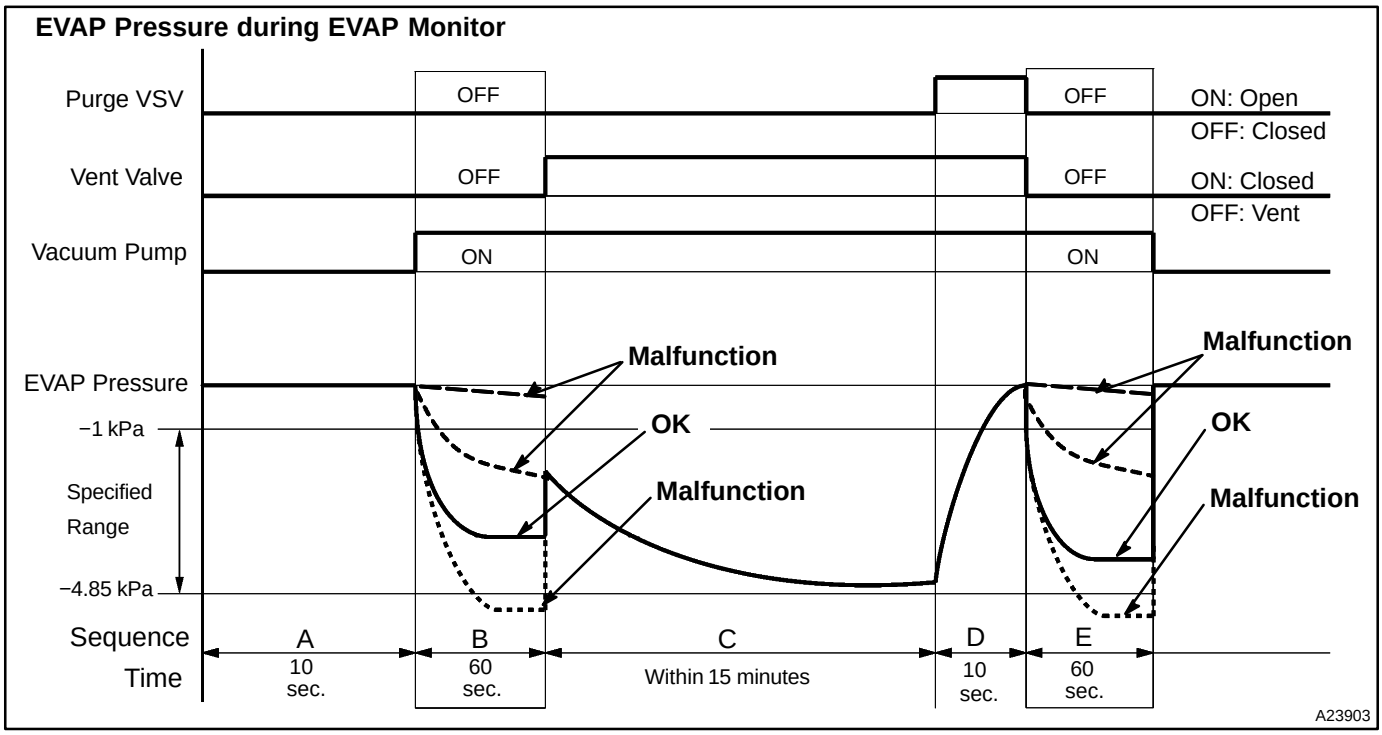

MONITOR STRATEGY

Related DTCs	P2401	Vacuum pump stuck OFF
	P2402	Vacuum pump stuck ON
Required sensors/components	Purge VSV and pump module	
Frequency of operation	Once per driving cycle	
Duration	Within 2 minutes	
MIL operation	2 driving cycles	
Sequence of operation	None	

TYPICAL ENABLING CONDITIONS

Item	Specification	
	Minimum	Maximum
The monitor will run whenever these DTCs are not present	See page DI−18	
Atmospheric pressure	70 to 110 kPa (525 to 825 mmHg)	
Battery voltage	10.5 V	−
Vehicle speed	−	2.5 mph (4 km/h)
Ignition switch	OFF	
EVAP pressure sensor malfunction (P0450, P0452, P0453)	Not detected	
EVAP canister purge valve	Not operated by scan tool	
EVAP canister vent valve	Not operated by scan tool	
EVAP leak detection pump	Not operated by scan tool	
Both of the following conditions are met before IG switch OFF	Condition 1 and 2	
1. Duration that vehicle is driven	5 min.	−
2. EVAP purge operation	Performed	
ECT	4.4 to 35°C (40 to 95°F)	
IAT	4.4 to 35°C (40 to 95°F)	
Time after key off	5 or 7 or 9.5 hours	
EVAP key−off monitor sequence	1 to 8	
1. Atmospheric pressure	−	
Next sequence is run if the following condition is set	−	
Atmospherics pressure change for 10 sec.	−	0.3 kPa (2.25 mmHg) for 1 sec.
2. First reference pressure measurement	−	
Next sequence is run if all of the following conditions are set	Condition 1, 2 and 3	
1. EVAP pressure just after reference pressure measurement start	−	−1 kPa (−7.5 mmHg)
2. Reference pressure	−4.85 to −1.057 kPa (−36.38 to −7.93 mmHg)	
3. Reference pressure	Saturated	

3. EVAP canister vent valve close stuck check	−	
Next sequence is run if the following condition is set	−	
EVAP pressure change after vent valve is ON	0.3 kPa (2.25 mmHg)	−
4. Vacuum introduction	−	
Next sequence is run if the following condition is set	Condition 1 and 2	
EVAP pressure	Saturated within 12 minutes	
5. EVAP canister purge valve close stuck check	−	
Next sequence is run if the following condition is set	−	
EVAP pressure change after purge valve is open	0.3 kPa (2.25 mmHg)	−
6. Second reference pressure measurement	−	
Next sequence is run if all of the following conditions are set	Condition 1, 2, 3 and 4	
1. EVAP pressure just after reference pressure measurement	−	−1 kPa (−7.5 mmHg)
2. Reference pressure	−4.85 to −1.057 kPa (−36.4 to −7.92 mmHg)	
3. Reference pressure	Saturated	
4. Difference between first reference pressure and second reference pressure	−	0.7 kPa (5.25 mmHg)
7. Leak check	−	
Next sequence is run if the following condition is set	−	
EVAP pressure when vacuum introduction is complete	−	Less than second reference pressure
8. Atmospheric pressure measurement	−	
EVAP monitor is complete if the following condition is set	−	
Atmospheric pressure difference between sequence 1 and 8	−	2.25 mmHg (0.3 kPa)

TYPICAL MALFUNCTION THRESHOLDS

Detection Criteria	Threshold
One of the following conditions set	Condition 1, 2, 3, 4 or 5
1. EVAP pressure just after reference pressure measurement start	−1 kPa (−7.5 mmHg) or more
2. Reference pressure	−4.85 kPa (−36.38 mmHg) or less
3. Reference pressure	−1.057 kPa (−7.93 mmHg) or more
4. Reference pressure	Not saturated
5. Difference between first reference pressure and second reference pressure	More than 0.7 kPa (5.25 mmHg)

MONITOR RESULT (MODE 06 DATA)

Refer to the EVAP Inspection Procedure (see page DI−368).

INSPECTION PROCEDURE

Refer to the EVAP Inspection Procedure (see page DI−368).

DIDU8−01

DTC	P2419	Evaporate Emission System Switching Valve Control Circuit Low

DTC	P2420	Evaporate Emission System Switching Valve Control Circuit High

CIRCUIT DESCRIPTION

Refer to the EVAP Inspection Procedure (see page DI−368).

DTCs	Monitoring Item	DTC Detection Conditions	Trouble Areas	Detection Timing	Detection Logic
P2419	Vent valve stuck ON (Closed)	One of following conditions are met: • 0.02 inch orifice low−flow • 0.02 inch orifice high−flow • Vacuum pump ON stuck • Vacuum pump OFF stuck • Vent valve ON (Closed) stuck NOTE: P043E, P043F, P2401, P2402 and P2419 have same DTC detection conditions.	• Pump module • Connector/Wire harness (Pump module − ECM) • ECM	While Ignition switch OFF	2 trips
P2420	Vent valve stuck OFF (Vent)	Vent valve OFF (Vent) stuck			

WIRING DIAGRAM

Refer to the EVAP Inspection Procedure (see page DI−368).

MONITOR DESCRIPTION

5 hours* after the ignition switch is turned OFF, the electric vacuum pump creates negative pressure (vacuum) in the EVAP (Evaporative Emission) system. The ECM monitors for leaks and actuator malfunctions based on the EVAP pressure.

HINT:

*: If the engine coolant temperature is not below 35°C (95°F) 5 hours after the ignition switch is turned off, the monitor check starts 2 hours later. If it is still not below 35°C (95°F) 7 hours after the ignition switch is turned off, the monitor check starts 2.5 hours later.

Sequence	Operations	Descriptions	Duration
−	ECM activation	Activated by soak timer, 5 hours (7 or 9.5 hours) after ignition switch turned to OFF.	−
A	Atmospheric pressure measurement	Vent valve turned OFF (vent) and EVAP system pressure measured by ECM in order to register atmospheric pressure. If EVAP pressure is not between 70 kPa and 110 kPa (525 mmHg and 825 mmHg), ECM cancels EVAP system monitor.	10 seconds
B	First 0.02 inch leak pressure measurement	In order to determine 0.02 inch leak pressure standard, vacuum pump creates negative pressure (vacuum) through 0.02 inch orifice and them ECM checks if vacuum pump and vent valve operate normally.	60 seconds
C	EVAP system pressure measurement	Vent valve turned ON (closed) to shut EVAP system. Negative pressure (vacuum) created in EVAP system, and EVAP system pressure then measured. Write down the measured value as it will be used in the leak check. If EVAP pressure does not stabilize within 15 minutes, ECM cancels EVAP system monitor.	15 minutes*
D	Purge VSV monitor	Purge VSV opened and then EVAP system pressure measured by ECM. Large increase indicates normal.	10 seconds
E	Second 0.02 inch leak pressure measurement	Leak check is performed after second 0.02 inch leak pressure standard is measured. If stabilized system pressure higher than second 0.02 inch leak pressure standard, ECM determines that EVAP system leaking.	60 seconds
F	Final check	Atmospheric pressure measured and then monitoring result recorded by ECM.	−

* If only a small amount of fuel is in the fuel tank, it takes longer for the EVAP pressure to stabilize.

Operation A: Atmospheric Pressure Measurement

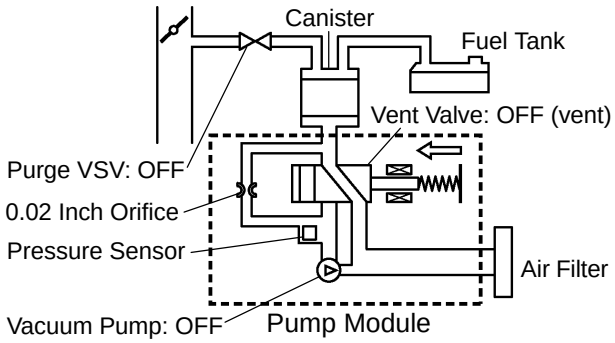

Operation B: 0.02 Inch Leak Pressure Measurement

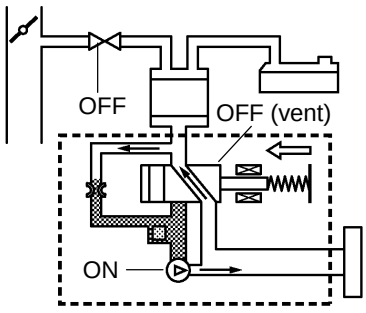

Operation C: EVAP Leak Check

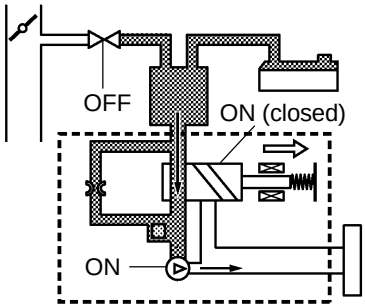

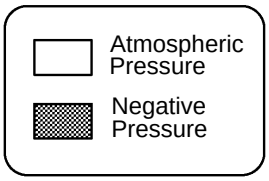

Operation D: Purge VSV monitor

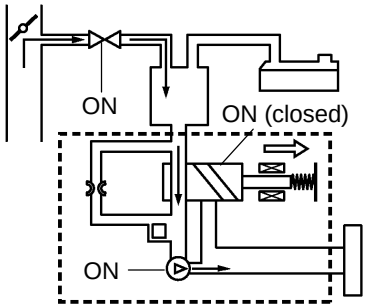

Y

A23480

(a) P2419: Vent valve stuck ON (Closed)
In sequence B and E, to determine the leak criterion, the vacuum pump creates negative pressure in the canister pump module through the 0.02 inch orifice. If the pressure is out of specified range or is not saturated, the ECM illuminates the MIL and sets DTCs P043E, P043F, P2401, P2402 and P2419 (2−trip detection logic).

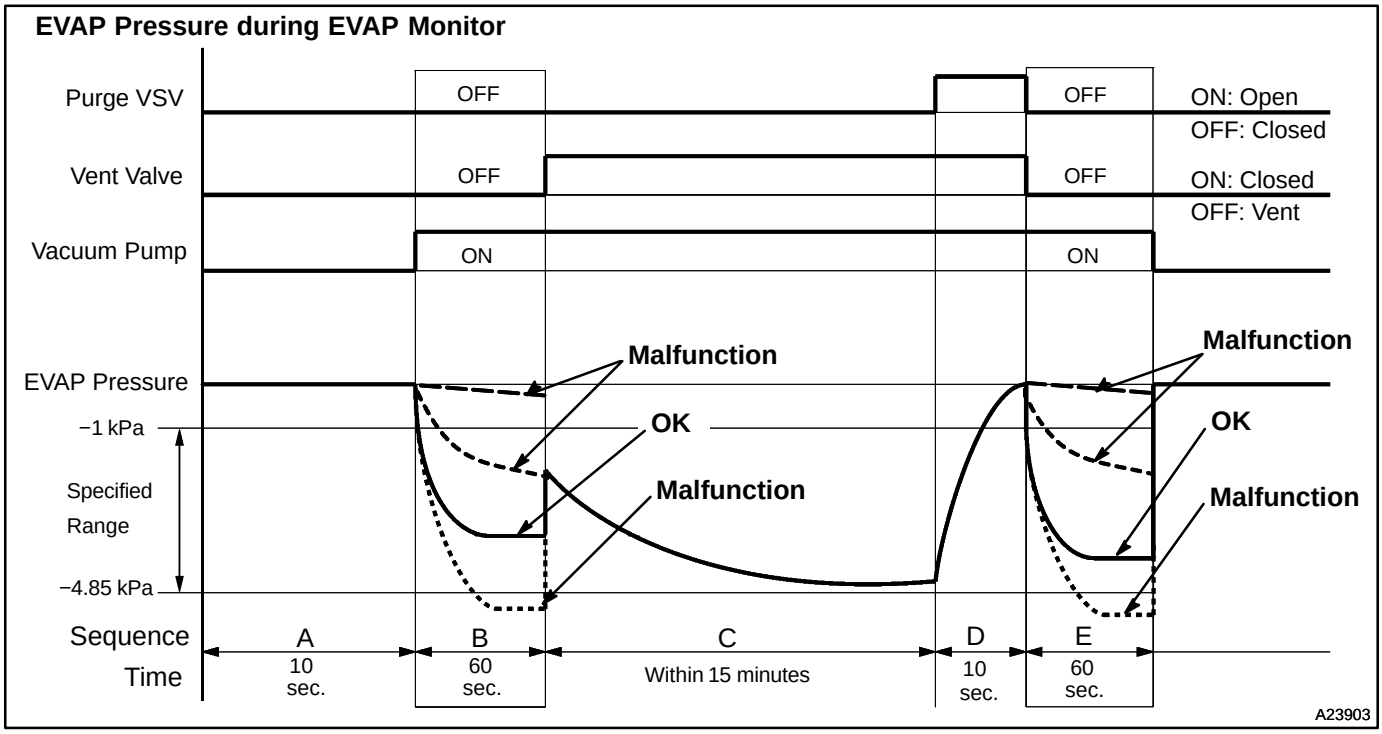

(b) P2420: Vent valve stuck OFF (vent)

In sequence C, the vent valve turns ON (closes) and the EVAP (Evaporative Emission) system pressure is then measured by the ECM, using the pressure sensor, to conduct an EVAP leak check. If the pressure does not increase when the vent valve turned ON (closed), the ECM interprets this as the vent valve being stuck OFF (vent). The ECM illuminates the MIL and sets the DTC.

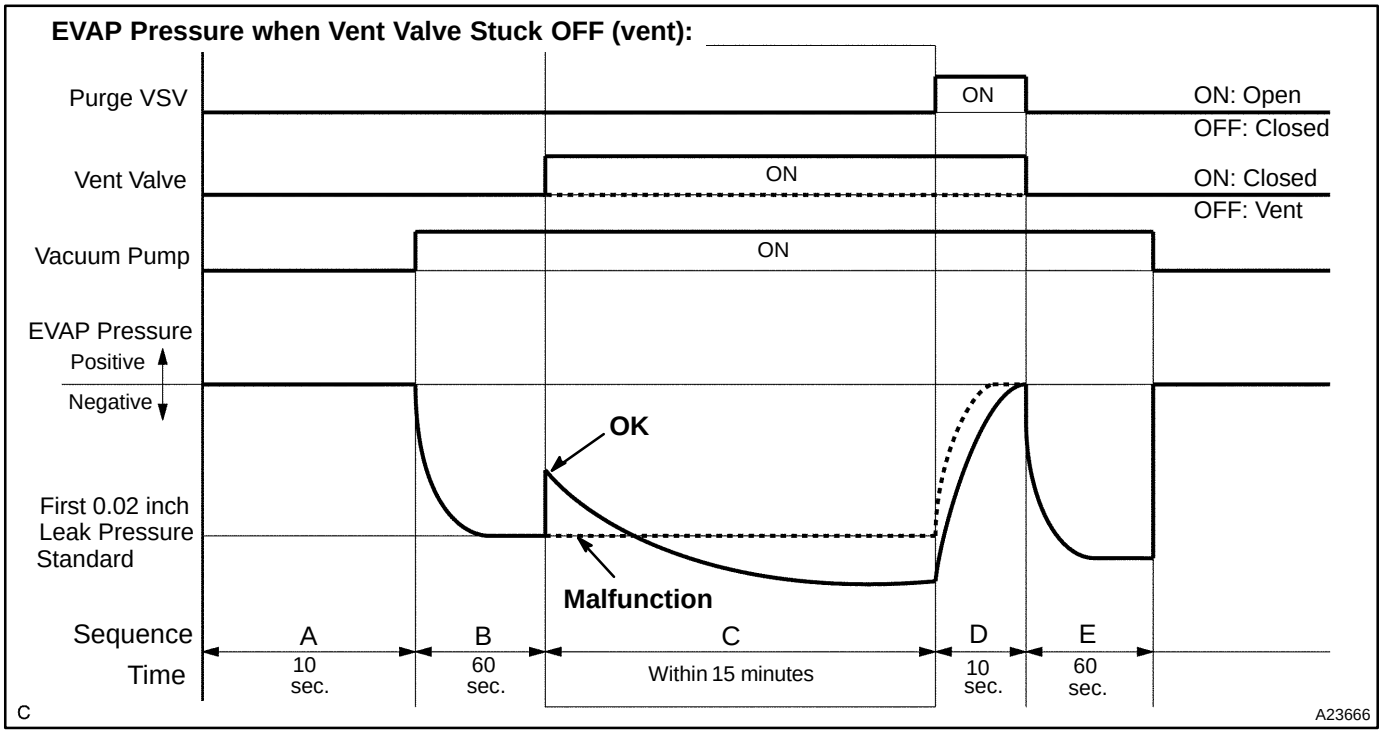

MONITOR STRATEGY

Related DTCs	P2419	Vent valve stuck open
	P2420	Vent valve stuck closed
Required sensors/components	Vent valve	
Frequency of operation	Once per driving cycle	
Duration	Within 2 minutes	
MIL operation	2 driving cycles	
Sequence of operation	None	

TYPICAL ENABLING CONDITIONS

Item	Specification	
	Minimum	Maximum
The monitor will run whenever these DTCs are not present	See page DI−18	
Atmospheric pressure	70 to 110 kPa (525 to 825 mmHg)	
Battery voltage	10.5 V	−
Vehicle speed	−	2.5 mph (4 km/h)
Ignition switch	OFF	
EVAP pressure sensor malfunction (P450, P0452, P0453)	Not detected	
EVAP canister purge valve	Not operated by scan tool	
EVAP canister vent valve	Not operated by scan tool	
EVAP leak detection pump	Not operated by scan tool	

Both of the following conditions are met before IG switch OFF	Condition 1 and 2	
1. Duration that vehicle is driven	5 min.	−
2. EVAP purge operation	Performed	
ECT	4.4 to 35°C (40 to 95°F)	
IAT	4.4 to 35°C (40 to 95°F)	
Time after key off	5 or 7 or 9.5 hours	
EVAP key−off monitor sequence	1 to 8	
1. Atmospheric pressure	−	
Next sequence is run if the following condition is set	−	
Atmospheric pressure change	−	0.3 kPa (2.25 mmHg) for 1 sec.
2. First reference pressure measurement	−	
Next sequence is run if all of the following conditions are set	Condition 1, 2 and 3	
1. EVAP pressure just after reference pressure measurement start	−	−1 kPa (−7.5 mmHg)
2. Reference pressure	−4.85 to −1.057 kPa (−36.38 to −7.93 mmHg)	
3. Reference pressure	Saturated	
3. EVAP canister vent valve close stuck check	−	
Next sequence is run if the following condition is set	−	
EVAP pressure change after vent valve is ON	0.3 kPa (2.25 mmHg)	−
4. Vacuum introduction	−	
Next sequence is run if the following condition is set	Condition 1 and 2	
EVAP pressure	Saturated within 12 minutes	
5. EVAP canister purge valve close stuck check	−	
Next sequence is run if the following condition is set	−	
EVAP pressure change after purge valve is open	0.3 kPa (2.25 mmHg)	−
6. Second reference pressure measurement	−	
Next sequence is run if all of the following conditions are set	Condition 1, 2, 3 and 4	
1. EVAP pressure just after reference pressure measurement	−	−1 kPa (−7.5 mmHg)
2. Reference pressure	−4.85 to −1.057 kPa (−36.4 to −7.92 mmHg)	
3. Reference pressure	Saturated	
4. Difference between first reference pressure and second reference pressure	−	0.7 kPa (5.25 mmHg)

7. Leak check	−	
Next sequence is run if the following condition is set	−	
EVAP pressure when vacuum introduction is complete	−	Second reference pressure
8. Atmospheric pressure	−	
EVAP monitor is complete is the following condition is set	−	
Atmospheric pressure difference between sequence 1 and 8	−	0.3 kPa (2.25 mmHg)

TYPICAL MALFUNCTION THRESHOLDS

Detection Criteria	Threshold
Vent valve stuck open:	
One of the following conditions is set	Condition 1, 2, 3, 4 or 5
1. EVAP pressure just after reference pressure measurement start	−1 kPa (−7.5 mmHg) or more
2. Reference pressure	−4.85 kPa (−36.38 mmHg) or less
3. Reference pressure	−1.057 kPa (−7.93 mmHg) or more
4. Reference pressure	Not saturated
5. Difference between first reference pressure and second reference pressure	More than 0.7 kPa (5.25 mmHg)
Vent valve stuck closed:	
EVAP pressure change after EVAP canister vent valve is ON	Less than 0.3 kPa (2.25 mmHg)

MONITOR RESULT (MODE 06 DATA)

Refer to page DI−26 for detailed information.

INSPECTION PROCEDURE

Refer to the EVAP Inspection Procedure (see page DI−368).

DIDT4−01

CIRCUIT INSPECTION

DTC	P0010	Camshaft Position ”A” Actuator circuit (Bank 1)

DTC	P0020	Camshaft Position ”A” Actuator circuit (Bank 2)

CIRCUIT DESCRIPTION

The Variable Valve Timing (VVT) system includes the ECM, the Oil Control Valve (OCV) and the VVT controller. The ECM sends a target ”duty−cycle” control signal to the OCV. This control signal, applied to the OCV, regulates the oil pressure supplied to the VVT controller. Camshaft timing control is performed based on engine operation conditions such as intake air volume, throttle position and engine coolant temperature.
The ECM controls the OCV, based on the signals output from the sensors. The VVT controller regulates the intake camshaft angle using oil pressure through the OCV. As a result, the relative position between the camshaft and the crankshaft is optimized, and the engine torque improves, fuel economy improves, and exhaust emissions decrease under overall driving conditions. Also, the ECM detects the actual valve timing using signals from the camshaft position sensor and the crankshaft position sensor, and performs feedback control. This is how target valve timing is verified by the ECM.

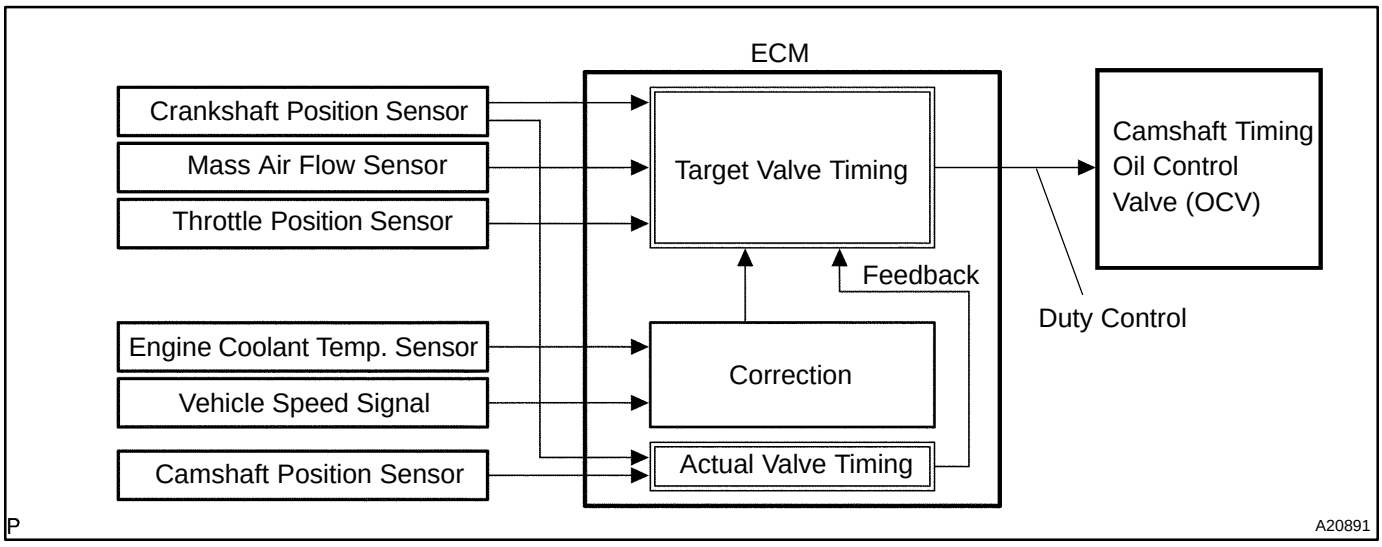

DTC No.	DTC Detecting Condition	Trouble Area
P0010 P0020	Open or short in OCV circuit	• Open or short in OCV circuit • OCV • ECM

MONITOR DESCRIPTION

After the ECM sends the ”target” duty−cycle signal to the OCV (Oil Control Valve), the ECM monitors the OCV current to establish an ”actual” duty−cycle. When the actual duty−cycle ratio varies from the target duty−cycle, the ECM sets a DTC.

MONITOR STRATEGY

Related DTCs	P0010	VVT oil control valve bank 1 range check
	P0020	VVT oil control valve bank 2 range check
Required sensors/components	OCV	
Frequency of operation	Continuous	
Duration	1 sec.	
MIL operation	Immediate	
Sequence of operation	None	

TYPICAL ENABLING CONDITIONS

Item	Specification	
	Minimum	Maximum
The monitor will run whenever this DTC is not present	See page DI−18	
Battery voltage	11 V	13 V
Target duty ratio	−	70%
Starter	OFF	
Current cut status	Not cut	

TYPICAL MALFUNCTION THRESHOLDS

Detection Criteria	Threshold
Either of the following conditions is met:	Condition 1 or 2
1. Output signal duty for OCV	Output duty ratio is 100% (always ON) but target duty ratio is less than 70%
2. Output signal duty for OCV	Output duty is 3% or less despite the ECM supplying current to the OCV

COMPONENT OPERATING RANGE

Parameter	Standard Value
Output signal duty for OCV	”More than 3%” and ”less than 100%”

WIRING DIAGRAM

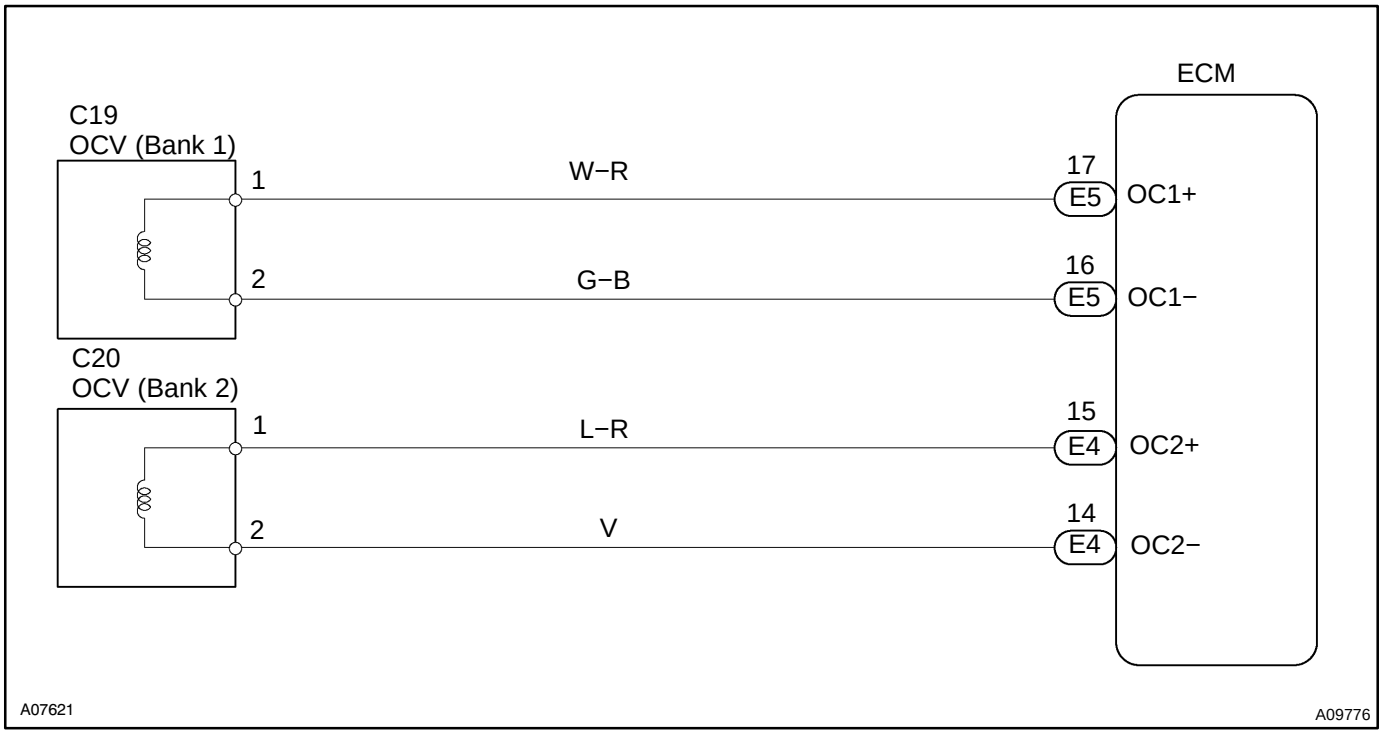

INSPECTION PROCEDURE

HINT:

- If DTC P0010 displayed, check left bank OCV circuit.
- If DTC P0020 displayed, check right bank OCV circuit.
- Read freeze frame data using hand−held tester. Because freeze frame records the engine conditions when the malfunction is detected. When troubleshooting, it is useful for determining whether the vehicle was running or stopped, the engine was warmed up or not, the air−fuel ratio was lean or rich, etc. at the time of the malfunction.

1	**Check OCV circuit.**

PREPARATION:

(a) Connect the hand−held tester to the DLC3.
(b) Start the engine and warm it up.
(c) Turn the ignition switch to ON and turn the hand−held tester ON.

CHECK:

(a) Select the item: DIAGNOSIS / ENHANCED OBD II / ACTIVE TEST / VVT CTRL B1 or VVT CTRL B2.
(b) Using the hand−held tester, operate the OCV and check the engine speed.

OK:

Standard:

Tester Operation	Specified Condition
OCV is OFF	Normal engine speed
OCV is ON	Rough idle or engine stall

OK → **Check for intermittent problems (See page DI−11).**

NG

2	**Check operation of OCV).**

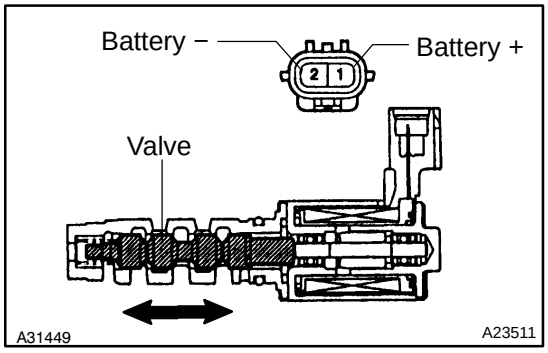

PREPARATION:

(a) Start the engine and warmed it up.
(b) Disconnect the OCV connector.
(c) Apply battery positive voltage between the terminals of the OCV.

CHECK:

Check the engine speed.

OK:

Rough idle or engine stalled.

NG → **Replace OCV.**

OK

3	**Check voltage between terminals OC1+ and OC1−, OC2+ and OC2− of ECM connector.**

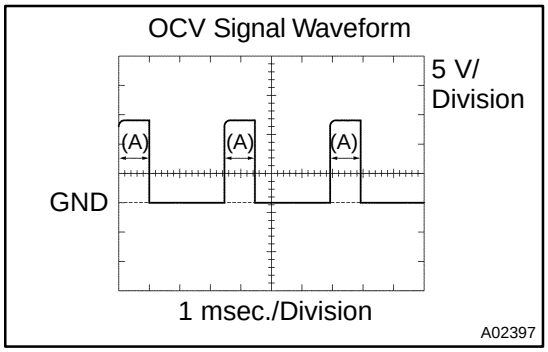

CHECK:

(a) Inspection using the oscilloscope.

(b) During idling, check the waveform between the specified terminals of the E5 ECM connector.

HINT:

The waveform frequency (A) is lengthened as the engine speed becomes higher.

OK:

Standard:

The correct waveform is as shown.

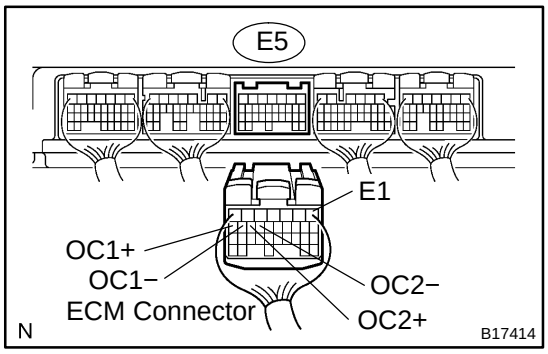

OK

NG → **Replace ECM (See page SF−66).**

4	Check for open and short in harness and connector between OCV and ECM.

Wire Harness Side

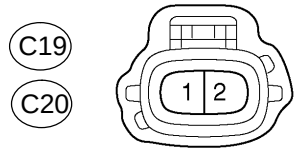

OCV Connector

Y A23463

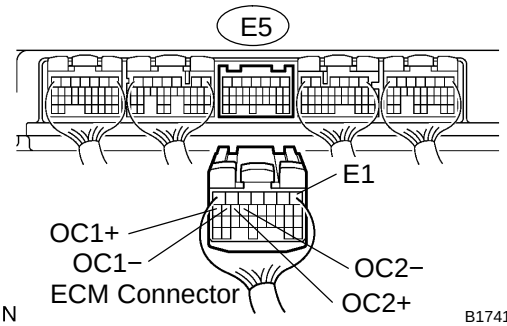

N B17414

PREPARATION:

(a) Disconnect the C19 or C20 OCV connector.

(b) Disconnect the E5 ECM connector.

CHECK:

Check for resistance between the wire harness side connectors.

OK:

Standard (Check for open):

Symbols (Terminal No.)	Specified condition
OCV (C20−1) − OC1+ (E5−17)	Below 1 Ω
OCV (C20−2) − OC1− (E5−16)	Below 1 Ω
OCV (C19−1) − OC2+ (E5−15)	Below 1 Ω
OCV (C19−2) − OC2− (E5−14)	Below 1 Ω

Standard (Check for short):

Symbols (Terminal No.)	Specified condition
OCV (C20−1) or OC1+ (E5−17) − E1 (E5−1)	10 kΩ or higher
OCV (C20−1) or OC1− (E5−16) − E1 (E5−1)	10 kΩ or higher
OCV (C19−1) or OC2+ (E5−15) − E1 (E5−1)	10 kΩ or higher
OCV (C19−1) or OC2− (E5−14) − E1 (E5−1)	10 kΩ or higher

NG → **Repair or replace harness or connector.**

OK

Check for intermittent problems (See page DI−11).

DIDT6−01

DTC	P0016	Crankshaft Position − Camshaft Position Correlation (Bank 1 Sensor A)

DTC	P0018	Crankshaft Position − Camshaft Position Correlation (Bank 2 Sensor A)

CIRCUIT DESCRIPTION

The crankshaft position sensor (CKP) system consists of a crankshaft position sensor plate and a pick−up coil.

The sensor plate has 34 teeth and is installed on the crankshaft. The pick−up coil is made of an iron core and magnet. The sensor plate rotates and as each tooth passes through the pick−up coil, a pulse signal is created. The pick−up coil generates 34 signals for each engine revolution. Based on these signals, the ECM calculates the crankshaft position and engine RPM. Using these calculations, the fuel injection time and ignition timing are controlled.

DTC No.	DTC Detection Condition	Trouble Area
P0016	Deviation in crankshaft position sensor signal and VVT sensor 1 signal (2 trip detection logic)	• Mechanical system (Jumped tooth of timing chain, chain stretched) • ECM
P0018	Deviation in crankshaft position sensor signal and VVT sensor 2 signal (2 trip detection logic)	

MONITOR DESCRIPTION

The ECM optimizes the valve timing using the Variable Valve Timing (VVT) system to control the intake valve camshaft. The VVT system includes the ECM, the Oil Control Valve (OCV) and the VVT controller. The ECM sends a target ”duty−cycle” control signal to the OCV. This control signal, applied to the OCV, regulates the oil pressure supplied to the VVT controller. The VVT controller can advance or retard the intake valve camshaft. The ECM calibrates the valve timing of the VVT system by setting the camshaft to the maximum retard angle when the engine speed is idling. The ECM closes the OCV to retard the cam. The ECM stores this valve as ”VVT learned value.” (When the difference between the target valve timing and the actual valve timing is 5 degrees or less, the ECM stores this in its memory.)

If the learned value meets both of the following conditions (”a” and ”b”), the ECM interprets this as a defect in the VVT system and sets a DTC.

(a) ”VVT learning” value is less than 22°CA or more than 47°CA.

(b) Above condition continues for more than 18 seconds.

MONITOR STRATEGY

Related DTCs	P0016	Deviation in crankshaft position sensor signal and camshaft position sensor signal (Bank 1)
	P0018	Deviation in crankshaft position sensor signal and camshaft position sensor signal (Bank 2)
Required sensors/components	Crankshaft position sensor, Camshaft position sensor	
Frequency of operation	Once per drive cycle	
Duration	60 sec.	
MIL operation	2 drive cycles	
Sequence of operation	None	

TYPICAL ENABLING CONDITIONS

Item	Specification	
	Minimum	Maximum
The monitor will run whenever this DTC is not present	See page DI−18	
Engine RPM	500 rpm	1,000 rpm

TYPICAL MALFUNCTION THRESHOLDS

Detection Criteria	Threshold
One of the following condition is met	Condition (a) or (b)
(a) VVT learning value at maximum retarded valve timing	Less than 22.5°CA (Crankshaft angle)
(b) VVT learning value at maximum retarded valve timing	More than 45.2°CA (Crankshaft angle)

INSPECTION PROCEDURE

HINT:

- If DTC P0016 is displayed, check left bank VVT sensor.
- If DTC P0018 is displayed, check right bank VVT sensor.
- Read freeze frame data using hand−held tester. Because freeze frame records the engine conditions when the malfunction is detected. When troubleshooting, it is useful for determining whether the vehicle was running or stopped, the engine was warmed up or not, the air−fuel ratio was lean or rich, etc. at the time of the malfunction.

1	**Check valve timing (Check for loose and jumping teeth of timing chain) (See page EM−44).**

NG → **Adjust valve timing (Repair or replace timing chain).**

OK

Replace ECM (See page SF−66).

DIDUA−01

DTC	P043E	Evaporate Emission System Reference Orifice Clog Up

DTC	P043F	Evaporate Emission System Reference Orifice High Flow

CIRCUIT DESCRIPTION

Refer to the EVAP Inspection Procedure (see page DI−368).

DTC	Monitoring Item	Detection Conditions	Trouble Areas	Detection Timing	Detection Logic
P043E	0.02 inch orifice clogged	One of following conditions are met: • 0.02 inch orifice low−flow • 0.02 inch orifice high−flow • Vacuum pump ON stuck • Vacuum pump OFF stuck • Vent valve ON (Closed) stuck NOTE: P043E, P043F, P2401, P2402 and P2419 have same DTC detection conditions.	• Pump module • Connector / Wire harness (Pump module − ECM) • ECM	While ignition switch OFF	2 trips
P043F	0.02 inch orifice high−flow				

WIRING DIAGRAM

Refer to the EVAP Inspection Procedure (see page DI−368).

MONITOR DESCRIPTION

5 hours after the ignition switch is turned to OFF, the electric vacuum pump creates negative pressure (vacuum) in the EVAP (Evaporative Emission) system. The ECM monitors for leaks and actuator malfunctions based on the EVAP pressure.

HINT:

*: If the engine coolant temperature is not below 35°C (95°F) after 5 hours after the ignition switch is turned off, the monitor check starts 2 hours later. If it is still not below 35°C (95°F) 7 hours after the ignition switch is turned off, the monitor check starts 2.5 hours later.

Sequence	Operations	Descriptions	Duration
−	ECM activation	Activated by soak timer, 5 hours (7 or 9.5 hours) after ignition switch turned to OFF.	−
A	Atmospheric pressure measurement	Vent valve turned OFF (vent) and EVAP system pressure measured by ECM in order to register atmospheric pressure. If EVAP pressure does not reach between 70 kPa and 110 kPa (525 mmHg and 825 mmHg), ECM cancels EVAP system monitor.	10 seconds
B	0.02 inch leak pressure measurement	In order to determine 0.02 inch leak pressure standard, vacuum pump creates negative pressure (vacuum) through 0.02 inch orifice and then ECM checks if vacuum pump and vent valve operate normally.	60 seconds
C	EVAP system pressure measurement	Vent valve turned ON (closed) to shut EVAP system. Negative pressure (vacuum) created in EVAP system, and EVAP system pressure then measured. Write down the measured value as it will be used in the leak check. If EVAP pressure does not stabilize within 15 minutes, ECM cancels EVAP system monitor.	15 minutes*
D	Purge VSV monitor	Purge VSV opened and then EVAP system pressure measured by ECM. Large increase indicates normal.	10 seconds
E	0.02 inch leak pressure measurement	Leak check is performed after 0.02 inch reference pressure is measured. If stabilized system pressure higher than 0.02 inch leak pressure standard, ECM determines that EVAP system leaking.	60 seconds
F	Final check	Atmospheric pressure measured and then monitoring result recorded by ECM.	−

* If only a small amount of fuel is in the fuel tank, it takes longer for the EVAP pressure to stabilize.

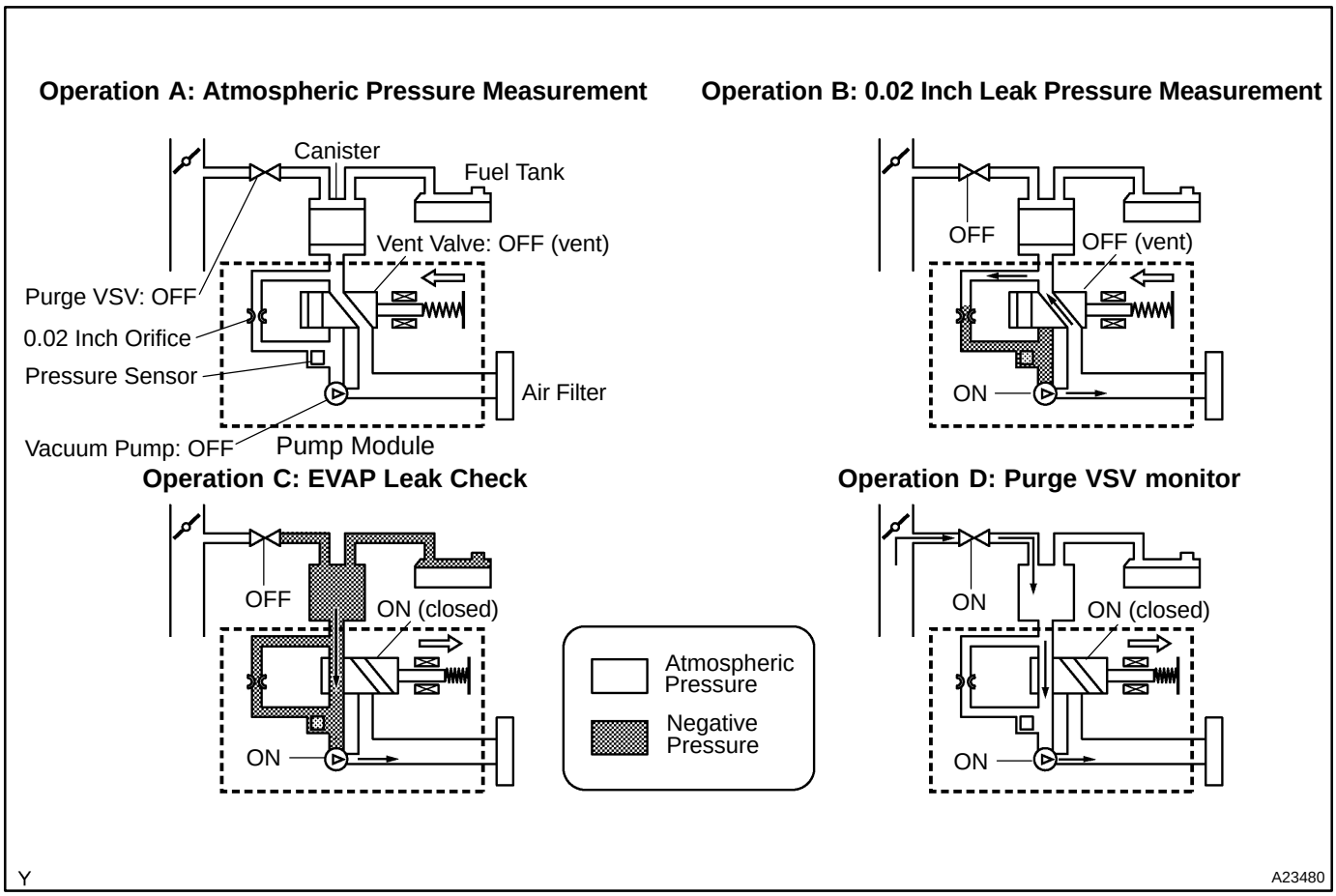

In sequence B and E, to determine the leak criterion, the vacuum pump creates negative pressure in the canister pump module through the 0.02 inch orifice. If the pressure is out of specified range or is not saturated, the ECM illuminates the MIL and sets DTCs P043E, P043F, P2401, P2402 and P2419 (2−trip detection logic).

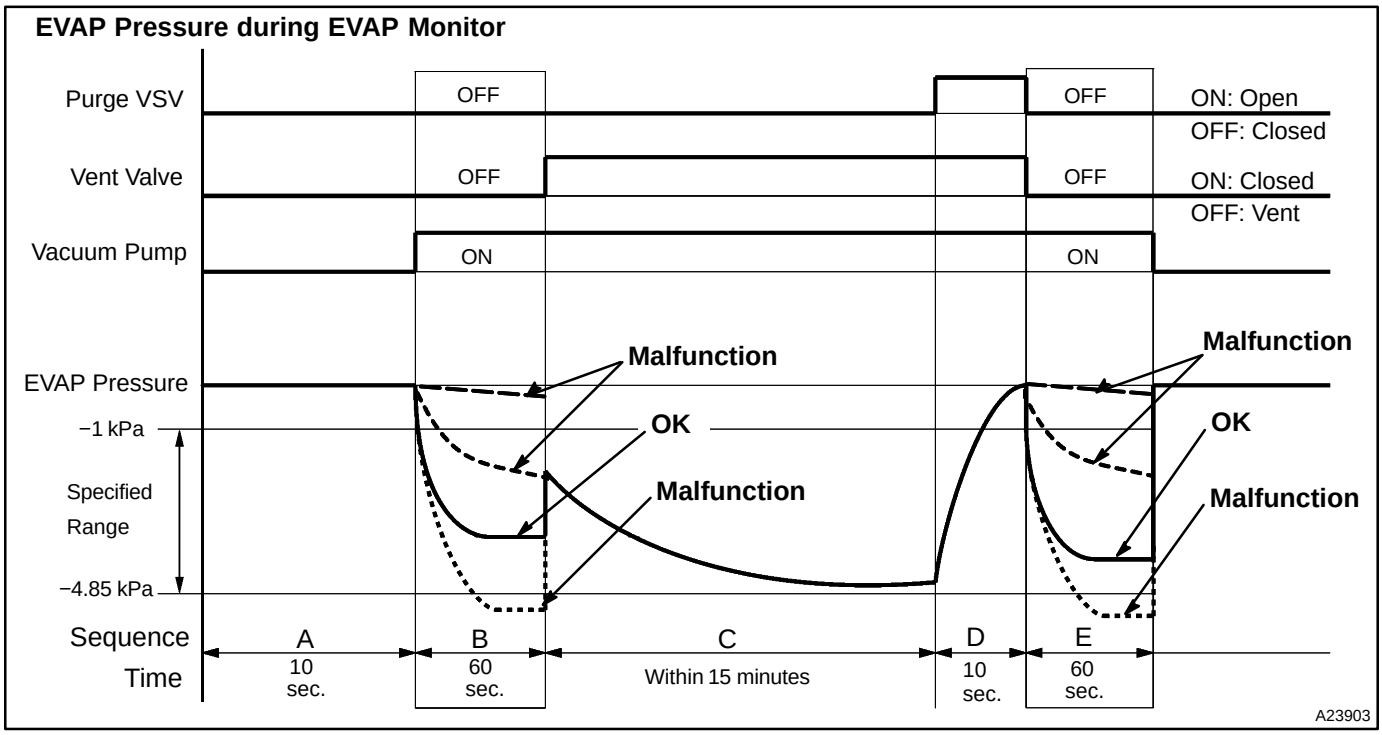

MONITOR STRATEGY

Related DTCs	P043E	0.02 inch orifice clog (built−in pump module)
	P043F	0.02 inch orifice high−flow (built−in pump module)
Required sensors/components	Pump module	
Frequency of operation	Once per driving cycle	
Duration	Within 2 min.	
MIL operation	2 driving cycles	
Sequence of operation	None	

TYPICAL ENABLING CONDITIONS

Item	Specification	
	Minimum	Maximum
The monitor will run whenever these DTCs are not present	See page DI−18	
Atmospheric pressure	70 to 110 kPa (525 to 825 mmHg)	
Battery voltage	10.5 V	−
Vehicle speed	−	2.5 mph (4 km/h)
Ignition switch	OFF	
EVAP pressure sensor malfunction (P0450, P0452, P0453)	Not detected	
EVAP canister purge valve	Not operated by scan tool	
EVAP canister vent valve	Not operated by scan tool	
EVAP leak detection pump	Not operated by scan tool	
Both of the following conditions are met before IG switch OFF	Condition 1 and 2	
1. Duration that vehicle is driven	5 min.	−
2. EVAP purge operation	Performed	
ECT	4.4 to 35°C (40 to 95°F)	
IAT	4.4 to 35°C (40 to 95°F)	
Time after key off	5 or 7 or 9.5 hours	
EVAP key−off monitor sequence	1 to 8	
1. Atmospheric pressure	−	
Next sequence is run if the following condition is set	−	
Atmospheric pressure change	−	0.3 kPa (2.25 mmHg) for 1 sec.
2. First reference pressure measurement	−	
Next sequence is run if all of the following conditions are set	Condition 1, 2 and 3	
1. EVAP pressure just after reference pressure measurement start	−	−1 kPa (−7.5 mmHg)
2. Reference pressure	−4.85 to −1.057 kPa (−36.38 to −7.93 mmHg)	
3. Reference pressure	Saturated	

3. EVAP canister vent valve close stuck check	−	
Next sequence is run if the following condition is set	−	
EVAP pressure change after vent valve is ON	0.3 kPa (2.25 mmHg)	−
4. Vacuum introduction	−	
Next sequence is run if the following condition is set	Condition 1 and 2	
EVAP pressure	Saturated within 12 minutes	
5. EVAP canister purge valve close stuck check	−	
Next sequence is run if the following condition is set	−	
EVAP pressure change after purge valve is open	0.3 kPa (2.25 mmHg)	−
6. Second reference pressure measurement	−	
Next sequence is run if all of the following conditions are set	Condition 1, 2, 3 and 4	
1. EVAP pressure just after reference pressure measurement	−	−1 kPa (−7.5 mmHg)
2. Reference pressure	−4.85 to −1.057 kPa (−36.4 to −7.92 mmHg)	
3. Reference pressure	Saturated	
4. Difference between first reference pressure and second reference pressure	−	0.7 kPa (5.25 mmHg)
7. Leak check	−	
Next sequence is run if the following condition is set	−	
EVAP pressure when vacuum introduction is complete	−	Less than second reference pressure
8. Atmospheric pressure measurement	−	
EVAP monitor is complete if the following condition is set	−	
Atmospheric pressure difference between sequence 1 and 8	−	0.3 kPa (2.25 mmHg)

TYPICAL MALFUNCTION THRESHOLDS

Detection Criteria	Threshold
One of the following conditions is met	Condition 1, 2, 3, 4 or 5
1. EVAP pressure just after reference pressure measurement start	More than −1 kPa (−7.5 mmHg)
2. Reference pressure	Less than −4.85 kPa (−36.4 mmHg)
3. Reference pressure	−1.057 kPa (−7.9 mmHg) or more
4. Reference pressure	Not saturated
5. Difference between first reference pressure and second reference pressure	0.7 kPa (5.3 mmHg) or more

MONITOR RESULT (MODE 06 DATA)

Refer to page DI−26 for detailed information on Monitor Result.

INSPECTION PROCEDURE

Refer to the EVAP Inspection Procedure (see page DI−368).

DIDT9−01

DTC	P0101	Mass or Volume Air Flow Circuit Range/ Performance Problem

CIRCUIT DESCRIPTION

Refer to DTC P0100, P0102 and P0103 on page DI−98.

DTC No.	DTC Detecting Condition	Trouble Area
P0101	After engine is warmed up, conditions (a), (b), (c) and (d) continue for more than 10 seconds: (2 trip detection logic) (a) Throttle valve fully closed (b) Voltage output of the mass air flow meter is more than 2.2 V. (c) Engine coolant temperature is more than 70 °C (158 °F). (d) Engine speed is less than 2,000 rpm.	• Mass air flow meter
	Conditions (a), (b) and (c) continue for more than 10 seconds at engine speed: (2 trip detection logic) (a) Engine speed is more than 300 rpm. (b) VTA is more than 0.1 V. (c) Voltage output of the mass air flow meter is less than 0.83 V.	

MONITOR DESCRIPTION

The MAF (Mass Air Flow) meter helps the ECM calculate the amount of air flowing through the throttle valve. The ECM uses this information to determine the fuel injection time and provide a proper air fuel ratio. Inside the MAF meter, there is a heated platinum wire exposed to the flow of intake air. By applying a specific current to the wire, the ECM heats this wire to a given temperature. The flow of incoming air cools the wire and an internal thermistor, affecting their resistance. To maintain a constant current value, the ECM varies the voltage applied to these components in the MAF meter. The voltage level is proportional to the air flow through the MAF meter. The ECM interprets this voltage as the intake air amount. If there is a defect in the MAF meter or an open or short circuit, the voltage level will deviate outside the normal operating range. The ECM interprets this deviation as a defect in the MAF meter and sets a DTC.

Example:

If the voltage is more than 2.2 V at idle or less than 0.83 V at idle OFF, the ECM interprets this as a defect in the MAF meter and sets a DTC.

MONITOR STRATEGY

Related DTCs	P0101	Mass air flow meter rationality (Low voltage)
		Mass air flow meter rationality (High voltage)
Required sensors/components	Main sensors/components	Mass air flow meter
	Related sensors/components	Engine speed sensor, Engine coolant temperature sensor, Throttle position sensor
Frequency of operation	Continuous	
Duration	10 sec.	
MIL operation	2 driving cycles	
Sequence of operation	None	

TYPICAL ENABLING CONDITIONS

Item	Specification	
	Minimum	Maximum
The monitor will run whenever this DTC is not present	See page DI−18	
High voltage:		
Engine speed	−	2,000 rpm
MAF meter voltage	−	4.9 V
Engine coolant temperature	70°C (158°F)	−
Low voltage:		
Engine speed	300 rpm	−
MAF meter voltage	0.2 V	−
Fuel cut	OFF	

TYPICAL MALFUNCTION THRESHOLDS

Detection Criteria	Threshold
Mass air flow meter voltage (High voltage)	More than 2.2 V (varies with throttle position sensor voltage)
Mass air flow meter voltage (Low voltage)	Less than 0.83 V (varies with throttle position sensor voltage)

INSPECTION PROCEDURE

HINT:

Read freeze frame data using the hand−held tester. Freeze frame data records the engine conditions when a malfunction is detected. When troubleshooting, freeze frame data can help determine if the vehicle was running or stopped, if the engine was warmed up or not, if the air−fuel ratio was lean or rich, as well as other data from the time when a malfunction occurred.

1	**Are there any other codes (besides DTC P0101) being output?**

PREPARATION:

(a) Connect the hand−held tester to the DLC3.
(b) Turn the ignition switch to ON and push the hand−held tester main switch ON.
(c) When using hand−held tester, enter the following menu: DIAGNOSIS/ENHANCED OBD II/DTC INFO/ CURRENT CODES.

CHECK:

Read the DTC using the hand−held tester.

RESULT:

Display (DTC output)	Proceed to
”P0101” and other DTCs	A
Only P0101	B

HINT:

If any other codes besides P0101 are output, perform the troubleshooting for those codes first.

B → **Replace mass air flow meter.**

A

Go to relevant DTC chart (See page DI−57).

DIDT5−01

DTC	P0011	Camshaft Position ”A” −Timing Over− Advanced or System Performance (Bank 1)

DTC	P0012	Camshaft Position ”A” −Timing Over− Retarded (Bank 1)

DTC	P0021	Camshaft Position ”A” −Timing Over− Advanced or System Performance (Bank 2)

DTC	P0022	Camshaft Position ”A” −Timing Over− Retarded (Bank 2)

CIRCUIT DESCRIPTION

Refer to DTCs P0010 on page DI−70.

DTC No.	DTC Detecting Condition	Trouble Area
P0011 P0021	Advanced cam timing: After engine is warmed up and engine speed is at 400 to 4,000 rpm, condition (a) continues. (1 trip detection logic) (a) Valve timing does not change from current valve timing	• Valve timing • OCV • VVT controller assembly • ECM
P0012 P0022	Retarded cam timing: After engine is warmed up and engine speed is at 400 to 4,000 rpm, condition (a) continues. (2 trip detection logic) (a) Valve timing does not change from current valve timing	

MONITOR DESCRIPTION

The ECM optimizes the valve timing using the VVT (Variable Valve Timing) system to control the intake valve camshaft. The VVT system includes the ECM, the OCV (Oil Control Valve) and the VVT controller. The ECM sends a target ”duty−cycle” control signal to the OCV. This control signal, applied to the OCV, regulates the oil pressure supplied to the VVT controller. The VVT controller can advance or retard the intake valve camshaft.

Example:

A DTC will set if: 1) the difference between the target and actual valve timing is more than 5 degrees of the crankshaft angle (CA) and the condition continues for more than 4.5 sec.; or 2) the OCV is forcibly activated 70 times or more.

Advanced cam DTCs are subject to ”1 trip” detection logic.

Retarded cam DTCs are subject to ”2 trip” detection logic.

MONITOR STRATEGY

Related DTCs	P0011	VVT system advance (Bank 1)
	P0012	VVT system retard (Bank 1)
	P0021	VVT system advance (Bank 2)
	P0022	VVT system retard (Bank 2)
Required sensors/components	Main sensors/components	Camshaft position sensor
	Related sensors/components	Engine coolant temperature sensor, Crankshaft position sensor
Frequency of operation	Once per drive cycle	
Duration	10 sec.	
MIL operation	P0011, P0021: Immediate P0012, P0022: 2 driving cycles	
Sequence of operation	None	

TYPICAL ENABLING CONDITIONS

Item	Specification	
	Minimum	Maximum
The monitor will run whenever these DTCs are not present	See page DI−18	
Battery voltage	11 V	−
Engine RPM	500 rpm	4,000 rpm
ECT	75°C (167°F)	100°C (212°F)

TYPICAL MALFUNCTION THRESHOLDS

Detection Criteria	Threshold
P0011, P0021 (Advance):	
Deviation of actual valve timing and target valve timing	More than 5°CA (Crankshaft angle)
Valve timing	No change at advanced valve timing
P0012, P0022 (Retard):	
Deviation of actual valve timing and target valve timing	More than 5°CA (Crankshaft angle)
Valve timing	No change at retarded valve timing

WIRING DIAGRAM

Refer to DTCs P0010 on page DI−70.

INSPECTION PROCEDURE

HINT:

- Bank 1 refers to bank that includes cylinder No. 1.
- Bank 2 refers to bank that does not include cylinder No. 1.
- If DTC P0011, P0012 is displayed, check the bank 1 VVT system.
- If DTC P0021, P0022 is displayed, check the bank 2 VVT system.
- Read freeze frame data using the hand−held tester. Freeze frame data records the engine conditions when a malfunction is detected. When troubleshooting, it is useful for determining whether the vehicle was running or stopped, the engine was warmed up or not, the air−fuel ratio was lean or rich, etc. at the time of the malfunction.

1	**Check operation of OCV.**

PREPARATION:

(a) Connect the hand−held tester to the DLC3.
(b) Start the engine and warm it up.
(c) Turn the ignition switch to ON and turn the hand−held tester ON.

CHECK:

(a) Select the item: DIAGNOSIS / ENHANCED OBD II / ACTIVE TEST / VVT CTRL B1 or VVT CTRL B2.
(b) Using the hand−held tester, operate the OCV and check the engine speed.

OK:

Standard:

Tester operation	Specified condition
OCV is OFF	Normal engine speed
OCV is ON	Rough idle or engine stall

OK → **VVT system is OK.***

*: DTC P0011, P0012, P0021 or P0022 is also output when a foreign object is detected in some parts of the system in the engine oil, and then the system returns to normal in a short time. As ECM is controlled to eject a foreign object, there is no problem on the VVT. There is also no problem on the VVT as the oil filter should catch the foreign object in the engine oil.

NG

2	**Check valve timing (See page EM−44).**

NG → **Adjust valve timing.**

OK

3	Check voltage between terminals OCV+ and OCV− of ECM connector.

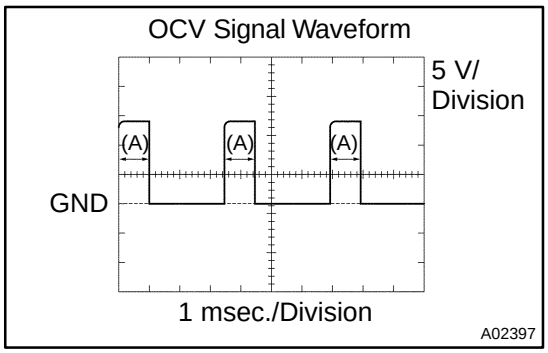

CHECK:

(a) Inspection using the oscilloscope.

(b) During idling, check the waveform between the specified terminals of the E5 ECM connector.

HINT:

The waveform frequency (A) is lengthened as the engine speed becomes higher.

OK:

Standard:

The correct waveform is as shown.

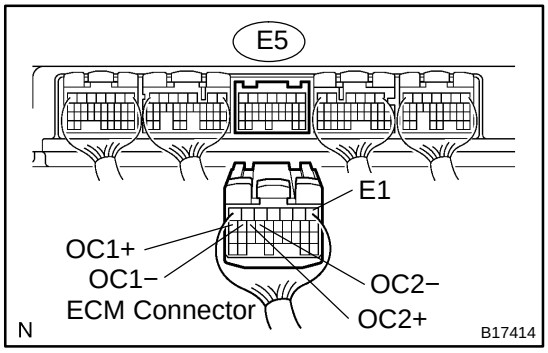

NG → **Replace ECM (See page SF−66).**

OK

4	Check OCV (See page EM−70).

NG → **Replace OCV, and then go to step 6.**

OK

5	Check camshaft timing gear assembly (See page EM−70).

NG → **Replace camshaft timing gear, and then go to step 7.**

OK

6	**Check oil control valve filter.**

NG → **Replace oil control valve filter.**

OK

7	**Check whether or not DTC P0010, P0012, P0021 or P0022 is stored.**

PREPARATION:

(a) Clear the DTC (See page DI−42).

(b) Perform simulation test.

CHECK:

Check whether or not DTC P0011, P0012, P0021 or P0022 is stored (See page DI−42).

OK:

Standard:

DTC P0011, P0012, P0021 or P0022 is not stored.

OK → **VVT system is OK.***

*: DTC P0011, P0012, P0021 or P0022 is also output when a foreign object is detected in some parts of the system in the engine oil, and then the system returns to normal in a short time. As ECM is controlled to eject a foreign object, there is no problem on the VVT. There is also no problem on the VVT as the oil filter should catch the foreign object in the engine oil.

NG

Replace ECM (See page SF−66).

DIDTC−01

DTC	P0116	Engine Coolant Temperature Circuit Range/ Performance Problem

CIRCUIT DESCRIPTION

Refer to DTC P0115 on page DI−115.

DTC No.	DTC Detecting Condition	Trouble Area
P0116	If the engine coolant temperature was 35˚C (95˚F) or more but less than 60˚C (140˚F) when the engine is started, and if conditions (a) and (b) are met: (a) Vehicle has accelerated and decelerated. (b) Engine coolant temperature remains within 3˚C (5.4˚F) of the initial engine coolant temperature (2 trip detection logic)	• Engine coolant temperature sensor
	If the engine coolant temperature is more than 60˚C (140˚F) when the engine is started, and if conditions (a) and (b) are met: (a) Vehicle has accelerated and decelerated. (b) If the engine coolant temperature sensor records a temperature variation below 1˚C (1.8˚F) successively 6 times (6 trip detection logic)	

MONITOR DESCRIPTION

The ECT (Engine Coolant Temperature) sensor is used to monitor the engine coolant temperature. The ECT sensor has a thermistor that varies its resistance depending on the temperature of the engine coolant. When the coolant temperature is low, the resistance in the thermistor increases. When the temperature is high, the resistance drops. The variations in resistance are reflected in the voltage output from the sensor. The ECM monitors the sensor voltage and uses this value to calculate the engine coolant temperature. When the sensor output voltage deviates from the normal operating range, the ECM interprets this as a fault in the ECT sensor and sets a DTC.

Examples:

(1) Upon starting the engine, the ECT is between 35˚C (95˚F) and 60˚C (140˚F). If after driving for 250 sec., the ECT still remains within 3˚C (5.4˚F) of the starting temperature, a DTC will be set (2 trip detection logic).

(2) Upon starting the engine, the ECT is over 60˚C (140˚F). If after driving for 250 sec., the ECT still remains within 1˚C (1.8˚F) of the starting temperature, a DTC will be set (6 trip detection logic).

MONITOR STRATEGY

Related DTCs	P0116	Engine coolant temperature sensor range check (Stuck)
Required sensors/components	Main sensors/components	Engine coolant temperature sensor
	Related sensors/components	Intake air temperature sensor, Crankshaft position sensor, Mass air flow meter
Frequency of operation	Continuous	
Duration	250 sec.	
MIL operation	2 driving cycles (When temperature is fixed between 35°C (95°F) and 60°C (140°F)) 6 driving cycles (When temperature is fixed at 60°C (140°F) or more)	
Sequence of operation	None	

TYPICAL ENABLING CONDITIONS

Item	Specification	
	Minimum	Maximum
The monitor will run whenever this DTC is not present	See page DI−18	
Case 1 (When temperature is fixed between 35°C (95°F) and 60°C (140°F)):		
Cumulative idle off period	250 sec.	−
Speed increase 18.6 mph (30 km/h) or more	10 times	−
Engine coolant temperature	35°C (95°F)	60°C (140°F)
Intake air temperature	−6.7°C (20°F)	−
Case 2 (When temperature is fixed at 60°C (140°F) or more):		
Engine coolant temperature at engine start	60°C (140°F)	−
Intake air temperature	−6.7°C (20°F)	−
Stop and go	Once or more (Stop for 20 sec. or more and accelerate to more than 43.5 mph (70 km/h) with in 40 sec.)	
Steady driving and stop *	Once or more	

*: Vehicle is driven by 40.4 mph (65 km/h) or more for 30 sec. or more and the vehicle speed reaches 43.5 mph (70 km/h). The vehicle is decelerated from 40.4 mph (65 km/h) to 1.86 mph (3 km/h) or less within 35 sec. and stopped for 10 sec.

TYPICAL MALFUNCTION THRESHOLDS

Detection Criteria	Threshold
Case1 (When temperature is fixed between 35°C (95°F) and 60°C (140°F)):	
Change of engine coolant temperature value	Less than 3°C (5.4°F)
Case2 (When temperature is fixed at 60°C (140°F) or more):	
Change of engine coolant temperature value	1°C (1.8°F) or less

COMPONENT OPERATING RANGE

Standard Value
Engine coolant temperature changes with the actual engine coolant temperature.

INSPECTION PROCEDURE

HINT:

- If DTC P0115, P0116, P0117, P0118 and P0125 are output simultaneously, ECT sensor circuit may be open or shorted. Perform the troubleshooting of DTC P0115, P0117 or P0118 first.
- Read freeze frame data using the hand−held tester. Freeze frame data records the engine conditions when a malfunction is detected. When troubleshooting, freeze frame data can help determine if the vehicle was running or stopped, if the engine was warmed up or not, if the air−fuel ratio was lean or rich, as well as other data from the time when a malfunction occurred.

Replace engine coolant temperature sensor.

DIDTE−01

DTC	P0121	Throttle/Pedal Position Sensor/Switch ”A” Circuit Range/Performance Problem

HINT:
This is the purpose of the ”throttle position sensor”.

CIRCUIT DESCRIPTION

Refer to DTC P0120 on page DI−123.

DTC No.	DTC Detecting Condition	Trouble Area
P0121	Condition (a) continues for 2.0 sec.: (a) Difference between VTA1 and VTA2 deviates from the threshold	Throttle body

MONITOR DESCRIPTION

The ECM uses throttle position sensor to monitor the throttle valve opening angle.
This sensor includes two signals, VTA1 and VTA2. VTA1 is used to detect the throttle opening angle and VTA2 is used to detect malfunctions in VTA1. There are several checks that the ECM performs confirm proper operation of the throttle position sensor and VTA1.
There is a specific voltage difference expected between VTA1 and VTA2 for each throttle opening angle. If the voltage output difference of the VTA1 and VTA2 deviates from the normal operating range, the ECM interprets this as a malfunction of the throttle position sensor. The ECM will turn on the MIL and a DTC is set.

FAIL SAFE

If the ETCS (Electronic Throttle Control System) has a malfunction, the ECM cuts off current to the throttle control motor. The throttle control valve returns to a predetermined opening angle (approximately 16°) by the force of the return spring. The ECM then adjusts the engine output by controlling the fuel infection (intermittent fuel−cut) and ignition timing in accordance with the accelerator pedal opening angle to enable the vehicle to continue at a minimum speed.
If the accelerator pedal is depressed firmly and slowly, the vehicle can be driven slowly.
If a ”pass” condition is detected and then the ignition switch is turned OFF, the fail−safe operation will stop and the system will return to normal condition.

MONITOR STRATEGY

Related DTCs	P0121	Throttle position sensor rationality
Required sensors/components	Throttle position sensor	
Frequency of operation	Continuous	
Duration	2 sec.	
MIL operation	Immediate	
Sequence of operation	None	

TYPICAL ENABLING CONDITIONS

Item	Specification	
	Minimum	Maximum
The monitor will run whenever this DTC is not present	See page DI−18	
Either of the following conditions is met	Condition (a) or (b)	
(a) Ignition switch	ON	
(b) Electric throttle motor power	ON	
TP sensor malfunction (P0120, P0122, P0123, P0220, P0222, P0223, P2135)	Not detected	

TYPICAL MALFUNCTION THRESHOLDS

Detection Criteria	Threshold
Different between VTA1 and VTA2 |VTA1 − (VTA2 × 0.8)|* * Corrected by learning value	Less than 0.8 V and more than 1.6 V

INSPECTION PROCEDURE

HINT:

Read freeze frame data using the hand−held tester. Freeze frame data records the engine conditions when a malfunction is detected. When troubleshooting, freeze frame data can help determine if the vehicle was running or stopped, if the engine was warmed up or not, if the air−fuel ratio was lean or rich, as well as other data from the time when a malfunction occurred.

Replace throttle body (See page SF−40).

DIDTF−01

DTC	P0125	Insufficient Coolant Temperature for Closed Loop Fuel Control

CIRCUIT DESCRIPTION

Refer to DTC P0115 on page DI−115.

DTC No.	DTC Detection Condition	Trouble Area
P0125	If THW or THA is less than −19.45°C (−3°F) at engine start and 20 min. or more after starting engine, engine coolant temp. sensor value is 20°C (68°F) or less (2 trip detection logic)	• Cooling system • Engine coolant temperature sensor • Thermostat
	If THW and THA is between −19.45°C (−3°F) and −8.34°C (17°F) at engine start, 109 sec. or more after starting engine and engine coolant temp. sensor value is 20°C (68°F) or less (2 trip detection logic)	
	If THW and THA greater than −8.34°C (17°F) at engine start and 61 sec. or more after starting engine, engine coolant temp. sensor value is 20°C (68°F) or less (2 trip detection logic)	

MONITOR DESCRIPTION

The ECT (Engine Coolant Temperature) sensor is used to monitor the temperature of the engine coolant. The resistance of the sensor varies with the actual coolant temperature. The ECM applies a voltage to the sensor and the varying resistance of the sensor cause the signal voltage to vary. The ECM monitors the ECT signal voltage after engine start−up. If, after sufficient time has passed, the sensor still reports that the engine is not warmed up enough for closed−loop fuel control after sufficient time has passed, the ECM interprets this as a fault in the sensor or cooling system and sets a DTC.

Example:

The engine coolant temperature was 0°C (32°F) at engine start. After 5 min. running time, the ECT sensor still indicates that the engine is not warmed up enough to begin air fuel ratio feedback control of the air−fuel ratio. The ECM interprets this as a fault in the sensor or cooling system and will set a DTC.

MONITOR STRATEGY

Related DTCs	P0125	Insufficient coolant temperature for closed loop fuel control
Required sensors/components	Main sensors/components	Engine coolant temperature sensor, Cooling system, Thermostat
	Related sensors/components	Mass air flow meter
Frequency of operation	Continuous	
Duration	61 sec. (at engine start, engine coolant or intake air temperature of −8.34°C (17°F) or more) 109 sec. (at engine start, engine coolant or intake air temperature of −19.45 to −8.34°C (−3 to 17°F)) 20 min. (at engine start, engine coolant or intake air temperature of less than −19.45°C (−3°F))	
MIL operation	2 driving cycles	
Sequence of operation	None	

TYPICAL ENABLING CONDITIONS

Item	Specification	
	Minimum	Maximum
The monitor will run whenever this DTC is not present	See page DI−18	
Fuel cut	OFF	
Engine	Running	

TYPICAL MALFUNCTION THRESHOLDS

Detection Criteria	Threshold
Time until ”engine coolant temperature” detection temperature reaches feedback start temperature	
When the temperature at the time of engine starting is −8.34˚C (17˚F) or more	Engine coolant temperature is less than ”closed−loop enable temperature” when 61 sec. or more after engine start
When the temperature at the time of engine starting is −19.45 to −8.34˚C (−3 to 17˚F)	Engine coolant temperature is less than ”closed−loop enable temperature” when 109 sec. or more after engine start
When the temperature at the time of engine starting is −19.45˚C (−3˚F) or less	Engine coolant temperature is less than ”closed−loop enable temperature” when 20 min. or more after engine start

INSPECTION PROCEDURE

HINT:

- If DTC P0115, P0116, P0117, P0118 and P0125 are output simultaneously, engine coolant temperature sensor circuit may be open or short. Perform the troubleshooting of DTC P0115, P0117 or P0118 first.
- Read freeze frame data using the hand−held tester. Freeze frame data records the engine conditions when a malfunction is detected. When troubleshooting, freeze frame data can help determine if the vehicle was running or stopped, if the engine was warmed up or not, if the air−fuel ratio was lean or rich, as well as other data from the time when a malfunction occurred.

1	**Are there any other codes (besides DTC P0125) being output?**

PREPARATION:

(a) Connect the hand−held tester to the DLC3.
(b) Turn the ignition switch to ON and push the hand−held tester main switch ON.
(c) When using hand−held tester, enter the following menu: DIAGNOSIS / ENHANCED OBD II / DTC INFO / CURRENT CODES.

CHECK:

Read the DTCs using the hand−held tester.

RESULT:

Display (DTC output)	Proceed to
P0125	A
”P0125” and other DTCs	B

HINT:

If any other codes besides ”P0125” are output, perform the troubleshooting for those DTCs first.

B → **Go to DTC chart (See page DI−57).**

A

2	**Inspect thermostat (See page CO−11).**

CHECK:

Check the valve opening temperature of the thermostat.

OK:

Valve opening temperature is 80 to 84°C (176 to 183°F)

HINT:

Also check that the valve is completely closed under opening temperature as above.

NG → **Replace thermostat (See page CO−11).**

OK

3	**Check cooling system.**

CHECK:

Check that there is detect in the cooling system which causes overcool, such as abnormal radiator fan operation, modified cooling system and so on.

NG → **Repair or replace cooling system.**

OK

Replace engine coolant temperature sensor.

DIDTG−01

DTC	P0128	Coolant Thermostat (Coolant Temperature Below Thermostat Regulating Temperature)

HINT:
This is the purpose of ”thermostat” malfunction detection.

CIRCUIT DESCRIPTION

If the engine coolant temperature does not reach 75˚C (167˚F) despite sufficient warm−up time has elapsed.

DTC No.	DTC Detection condition	Trouble Area
P0128	Condition (a), (b) and (c) are met: (a) Cold start (b) After sufficient warm−up time has elapsed (c) Engine coolant temperature greater than 75˚C (167˚F)	• Thermostat • Cooling system • Engine coolant temperature sensor • ECM

MONITOR DESCRIPTION

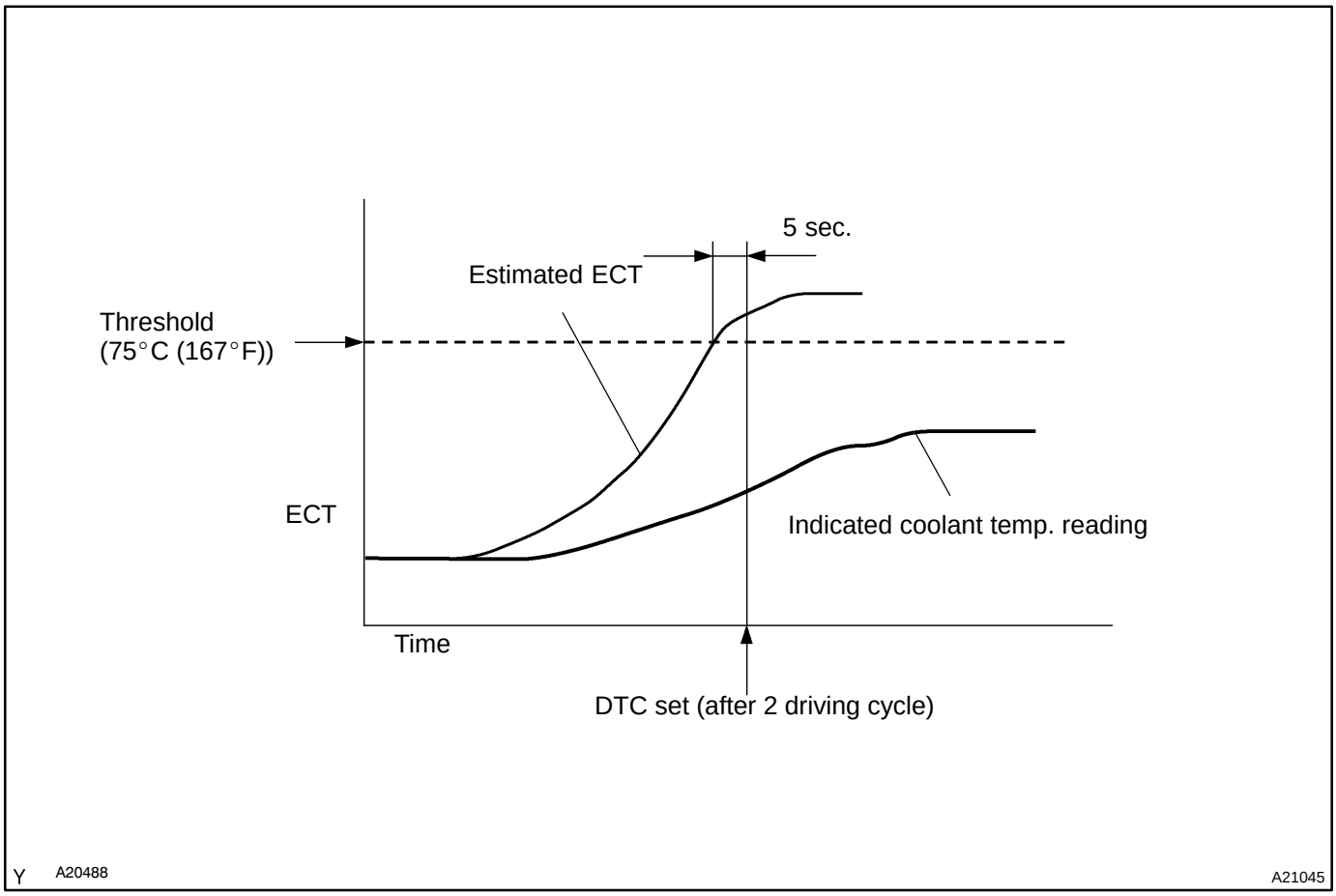

The ECM estimates the coolant temperature based on starting temperature, engine loads, and engine speeds. The ECM then compares the estimated temperature with the actual ECT (Engine Coolant Temperature). When the estimated coolant temperature reaches 75°C (167°F), the ECM checks the actual ECT. If the actual ECT is less than 75°C (167°F), the ECM will interpret this as a fault in the thermostat or engine cooling system and set a DTC.

MONITOR STRATEGY

Related DTCs	P0128	Thermostat
Required sensors/components	Main sensors/components	Engine coolant temperature sensor, Engine cooling system, Thermostat
	Related sensors/components	Intake air temperature sensor, Vehicle speed sensor
Frequency of operation	Once per driving cycle	
Duration	15 min.	
MIL operation	2 driving cycles	
Sequence of operation	None	

TYPICAL ENABLING CONDITIONS

Item	Specification	
	Minimum	Maximum
The monitor will run whenever this DTC is not present	See page DI−18	
Battery voltage	11.0 V	−
Either of the following conditions is met	Condition 1 or 2	
1. All of the following conditions are met	Condition (a), (b) and (c)	
(a) ECT at engine start − IAT at engine start	−15 to 7°C (−27 to 12.6°F)	
(b) ECT at engine start	−10 to 56°C (14 to 133°F)	
(c) IAT at engine start	−10 to 56°C (14 to 133°F)	
2. All of the following conditions are met	Condition (a), (b) and (c)	
(a) ECT at engine start − IAT at engine start	7°C (44.6°F)	−
(b) ECT at engine start	−	56°C (133°F)
(c) IAT at engine start	−10°C (14°F)	−
Accumulated time that vehicle speed is 80 mph (128 km/h) or more	−	20 sec.

TYPICAL MALFUNCTION THRESHOLDS

Detection Criteria	Threshold
Duration that both of following conditions 1 and 2 are met	5 sec. or more
1. Estimated ECT	75°C (167°F) or more
2. ECT sensor output	Less than 75°C (167°F)

COMPONENT OPERATING RANGE

Parameter	Standard Value
Engine coolant temperature sensor output value after warm up	75°C (167°F) or more

INSPECTION PROCEDURE

HINT:

Read freeze frame data using the hand−held tester. Freeze frame data records the engine conditions when a malfunction is detected. When troubleshooting, freeze frame data can help determine if the vehicle was running or stopped, if the engine was warmed up or not, if the air−fuel ratio was lean or rich, as well as other data from the time when a malfunction occurred.

1	**Are there any other codes (besides DTC P0128) being output?**

PREPARATION:

(a) Connect the hand−held tester to the DLC3.
(b) Turn the ignition switch to ON and push the hand−held tester main switch ON.
(c) When using hand−held tester, enter the following menu: DIAGNOSIS / ENHANCED OBD II / DTC INFO / CURRENT CODES.

CHECK:

Read the DTC using the hand−held tester.

RESULT:

Display (DTC Output)	Proceed to
P0128	A
P0128 and other DTCs	B

HINT:

If any other codes besides P0128 are output, perform the troubleshooting for those DTCs first.

B → **Go to DTC chart (See page DI−57).**

A

2	**Check cooling system.**

CHECK:

(a) Check for defects in the cooling system that might cause the system to be too cold, such as abnormal radiator fan operation or a modified cooling system.
(b) Check the valve opening temperature of the thermostat.

OK:

Valve opening temperature is 80 to 84°C (176 to 183°F)

HINT:

Also check that the valve is completely closed under opening temperature as above.

NG → **Repair or replace cooling system.**

OK

3	**Inspect thermostat (See page CO−11).**

CHECK:

Check the valve lift.

OK:

Valve lift: 10 mm (0.39 in.) or more at 95°C (203°F)

NG → **Replace thermostat (See page CO−11).**

OK

Replace ECM (See page SF−66).

DIDTJ−01

DTC	P0230	Fuel Pump Primary Circuit

CIRCUIT DESCRIPTION

In the diagram below, when the engine is cranked, current flows from terminal STAR of the ECM to the starter relay coil and also current flows to terminal STA of the ECM (STA signal).
When the STA signal and NE signal are input to the ECM, the Tr1 is turned ON, current flows to the coil of the circuit opening relay, the relay switches on, power is supplied to the fuel pump, and the fuel pump operates.
While the NE signal is generated (engine running), the ECM keeps the Tr1 ON (circuit opening relay ON) and the fuel pump also keeps operating.
The fuel pump speed is controlled at two levels (high speed or low speed) by the condition of the engine (starting, light load, heavy load). When the engine starts (STA ON), the Tr2 in the ECM is OFF, so the fuel pump relay closes and battery positive voltage is applied directly to the fuel pump. The fuel pump operates at high speed.
After the engine starts while idling or light loads, since the Tr2 goes ON, power is supplied to the fuel pump via the fuel pump resistor. The fuel pump operates at low speed.

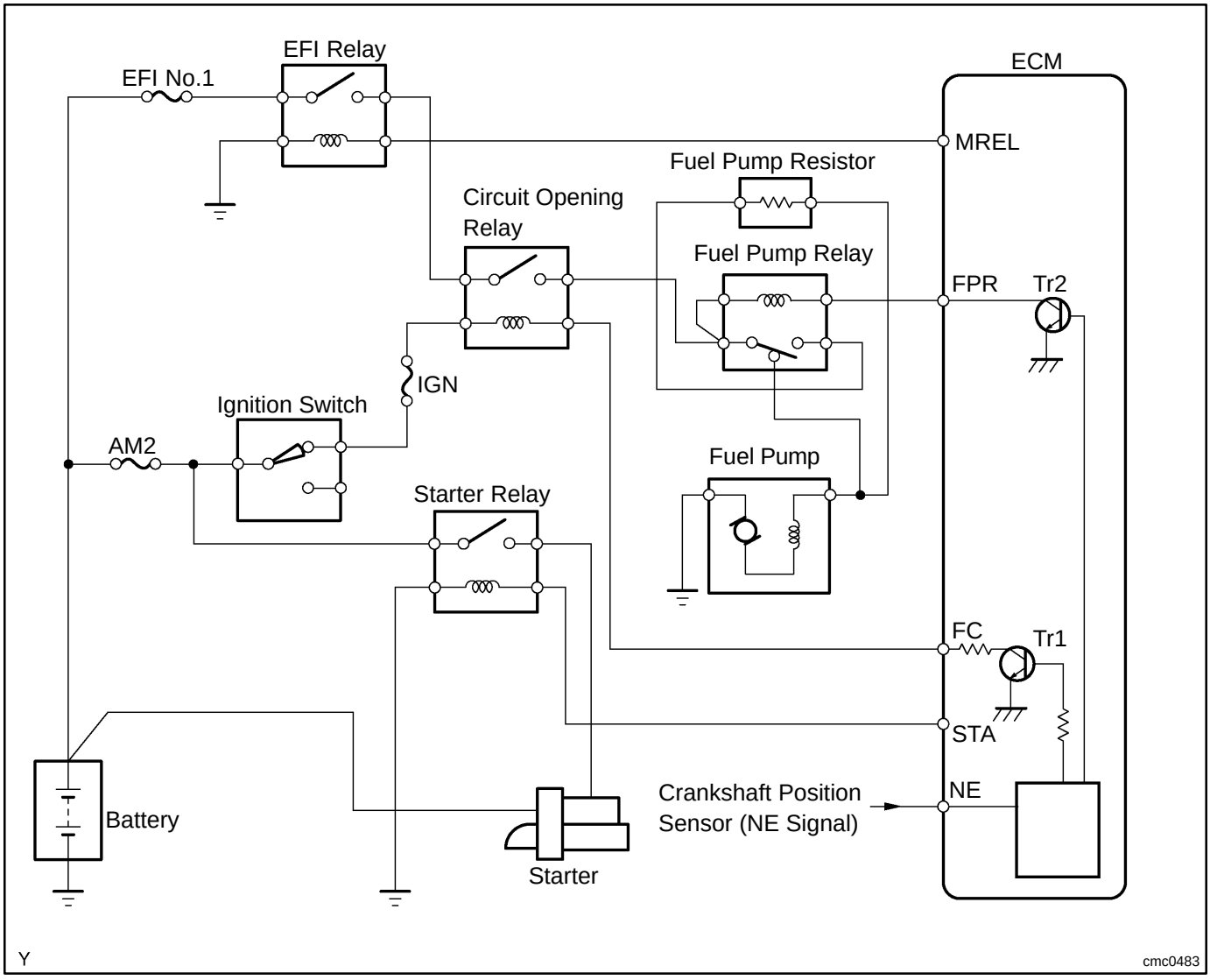

DTC No.	DTC Detecting Condition	Trouble Area
P0230	Open or short in fuel pump relay circuit	• Open or short in fuel pump relay circuit • Fuel pump relay • Circuit opening relay • Fuel pump • ECM

WIRING DIAGRAM

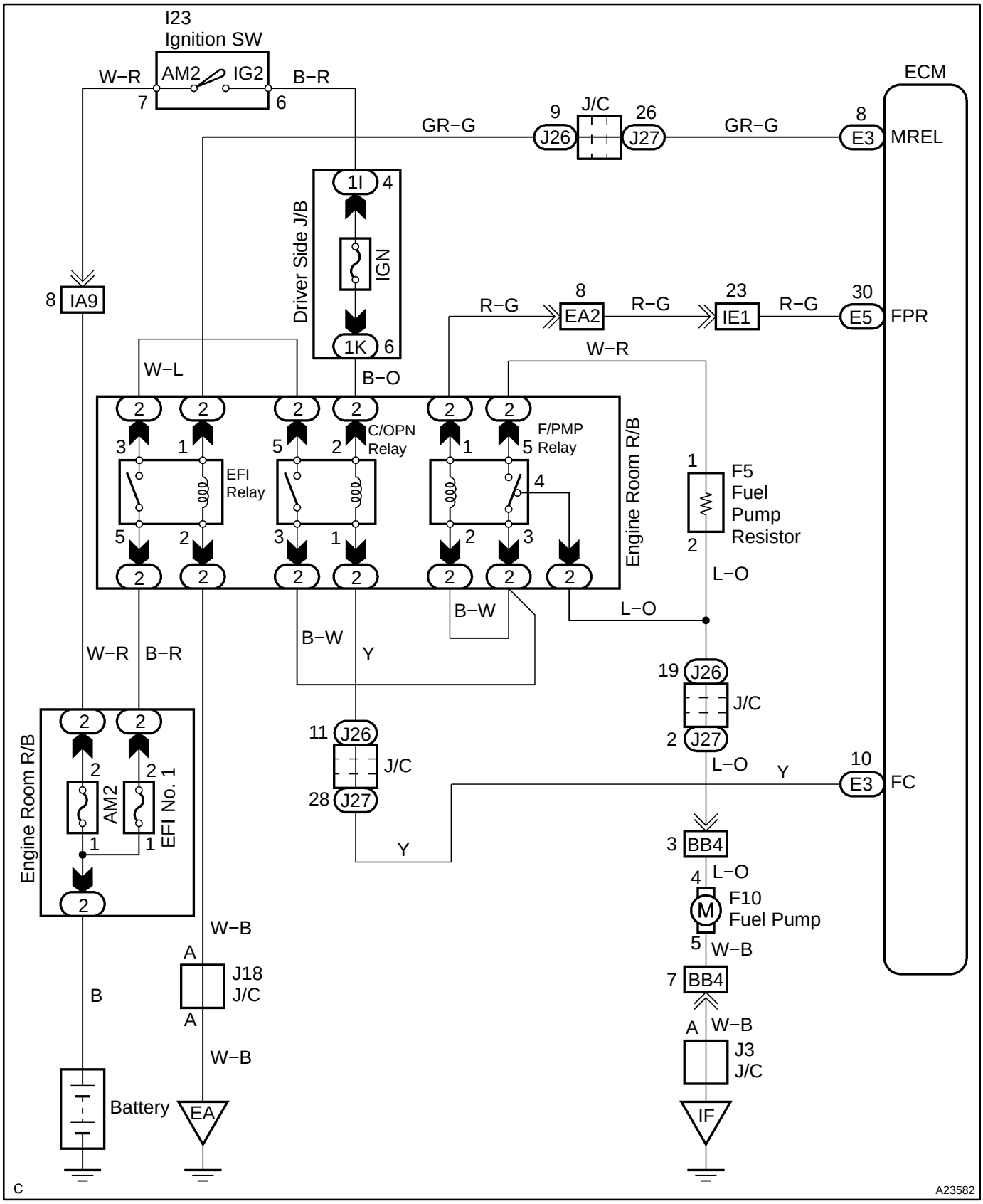

HINT:
This diagnostic chart is based on premise that engine is started. If the engine is not started, proceed to problem symptoms table on DI−33.

INSPECTION PROCEDURE

HINT:

Read freeze frame data using the hand−held tester. Freeze frame data records the engine conditions when a malfunction is detected. When troubleshooting, freeze frame data can help determine if the vehicle was running or stopped, if the engine was warmed up or not, if the air−fuel ratio was lean or rich, as well as other data from the time when a malfunction occurred.

1	**Check voltage between terminal FPR and E1 of ECM.**

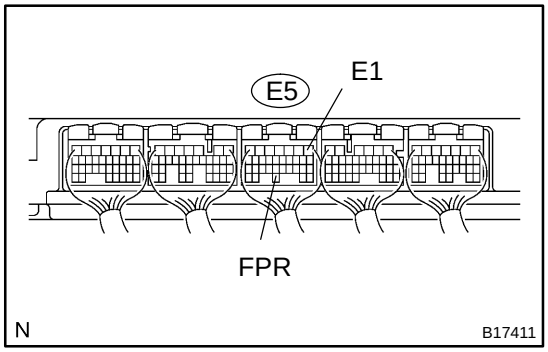

CHECK:

Measure the voltage between terminals of E5 ECM connectors.

OK:

Tester Connection	Condition	Specified Condition
FPR (E5−30) − E1 (E5−1)	STA signal ON	9 to 14 V
FPR (E5−30) − E1 (E5−1)	STA signal OFF	0 to 3 V

OK → **Replace ECM (See page SF−66).**

NG

2	**Check fuel pump relay.**

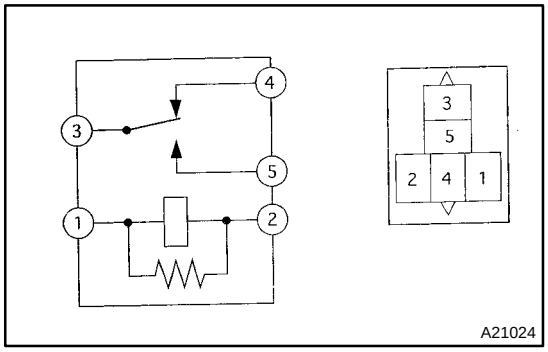

PREPARATION:

Remove the fuel pump relay from the engine room R/B.

CHECK:

Inspect the fuel pump relay.

OK:

Terminal No.	Condition	Specified Condition
3 − 4	Apply B+ between terminals 1 and 2	10 kΩ or higher
3 − 4	Usually	Below 1 Ω
3 − 5	Usually	10 kΩ or higher
3 − 5	Apply B+ between terminals 1 and 2	Below 1 Ω

NG → **Replace fuel pump relay.**

OK

3	**Check for open and short in harness and connector between fuel pump relay and ECM.**

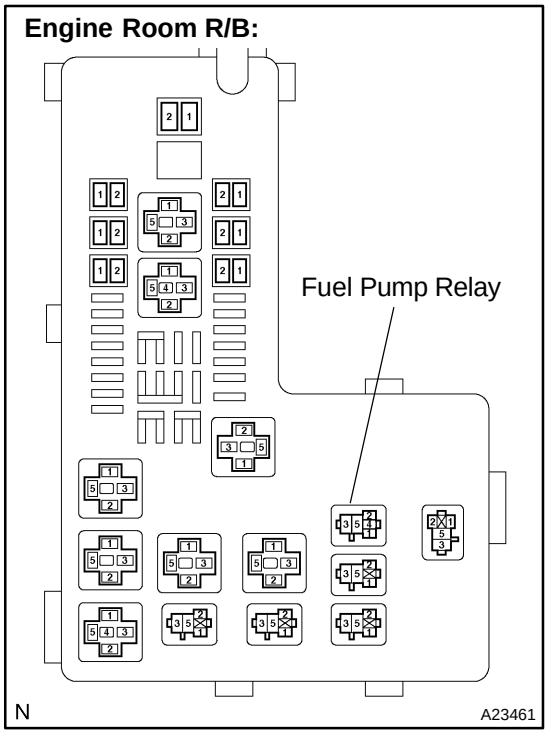

PREPARATION:

(a) Remove the fuel pump relay from the engine room J/B.

(b) Disconnect the E5 ECM connector.

CHECK:

Measure the resistance between wire harness side connectors.

OK:

Standard:

Tester Connection	Specified Condition
Engine Room J/B (Fuel pump relay terminal 1) − FPR (E5−30)	Below 1 Ω
Engine Room J/B (Fuel pump relay terminal 1) or FPR (E5−30) − Body ground	10 kΩ or higher

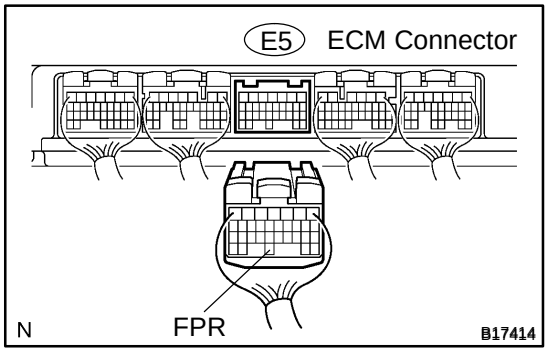

NG → **Repair or replace harness or connector.**

OK

Replace ECM (See page SF−66).

DIDUI−01

DTC	P0031	Oxygen (A/F) Sensor Heater Control Circuit Low (Bank 1 Sensor 1)

DTC	P0032	Oxygen (A/F) Sensor Heater Control Circuit High (Bank 1 Sensor 1)

DTC	P0051	Oxygen (A/F) Sensor Heater Control Circuit Low (Bank 2 Sensor 1)

DTC	P0052	Oxygen (A/F) Sensor Heater Control Circuit High (Bank 2 Sensor 1)

HINT:
Although each DTC title (DTC description) says ”oxygen sensor”, these DTCs are related to the ”A/F sensor”.

CIRCUIT DESCRIPTION

Refer to DTC P2195 on page DI−312.

HINT:
The ECM provides a pulse width modulated control circuit to adjust current through the heater. The A/F sensor heater circuit uses a relay on the B+ side of the circuit.

Reference (Bank 1 Sensor 1 System Drawing):

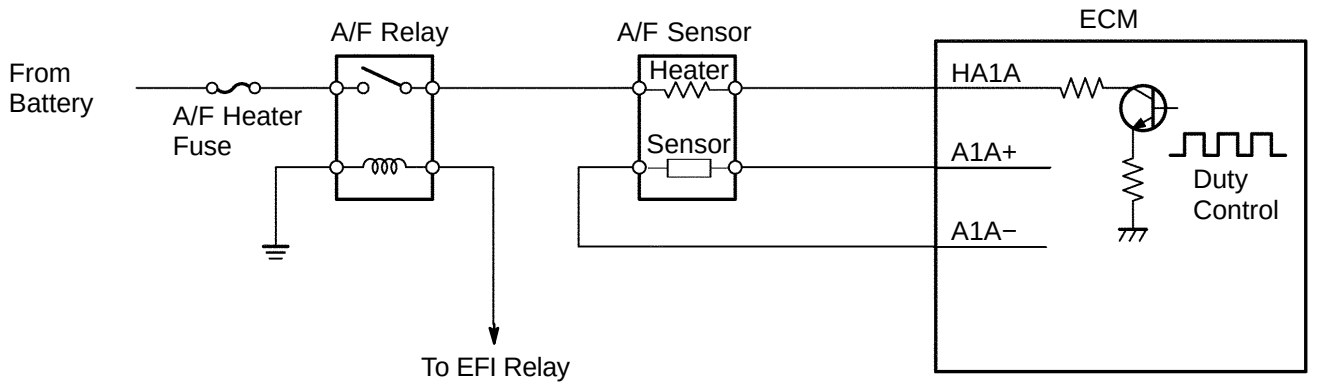

DTC No.	DTC Detection Condition	Trouble Area
P0031 P0051	Heated current is 0.8 A or less when heater operates (1 trip detection logic)	• Open or short in heater circuit of A/F sensor • A/F sensor heater • A/F sensor heater relay • ECM
P0032 P0052	Hybrid IC high current limiter port is fail (1 trip detection logic)	

HINT:

- Bank 1 refers to the bank that includes cylinder No.1.
- Bank 2 refers to the bank that does not include cylinder No.1.
- Sensor 1 refers to the sensor closest to the engine assembly.
- Sensor 2 refers to the sensor farthest away from the engine assembly.

MONITOR DESCRIPTION

The ECM uses the Air−Fuel Ratio sensor (A/F sensor) information to regulate the air−fuel ratio close to the stoichiomentric ratio. This maximizes the catalytic converter's ability to purify exhaust gases. The sensor detects oxygen levels in the exhaust gas and sends this signal to the ECM.

The inner surface of the sensor element is exposed to outside air. The outer surface of the sensor element is exposed to exhaust gas. The sensor element is made of platinum coated zirconia and includes an integrated heating element. The zirconia element generates a small voltage when there is a large difference in the oxygen concentrations of the exhaust and the outside air. The platinum coating amplifies the voltage generation. When heated, the sensor becomes very efficient. If the temperature of the exhaust is low, the sensor will not generate useful voltage signals without supplemental heating. The ECM regulates the supplemental heating using a duty−cycle approach to regulate the average current in the heater element. If the heater current is out of the normal range, the sensor's output signals will be inaccurate and the ECM can not regulate the air−fuel ratio properly.

When the heater current is out of the normal operating range, the ECM interprets this as a malfunction and sets a DTC.

MONITOR STRATEGY

Related DTCs	P0031	A/F sensor heater (Bank 1) range check (Low current)
	P0032	A/F sensor heater (Bank 1) range check (High current)
	P0051	A/F sensor heater (Bank 2) range check (Low current)
	P0052	A/F sensor heater (Bank 2) range check (High current)
Required sensors/components	Main sensors/components	A/F sensor heater
	Related sensors/components	−
Frequency of operation	Continuous	
Duration	10 sec.	
MIL operation	Immediate	
Sequence of operation	None	

TYPICAL ENABLING CONDITIONS

Item	Specification	
	Minimum	Maximum
The monitor will run whenever these DTCs are not present	See page DI−18	
P0031, P0051 (Low current):		
Battery voltage	10.5 V	−
A/F sensor heater duty ratio	50%	−
Time after engine start	10 sec.	−
P0032, P0052 (High current):		
Time after engine start	10 sec.	−

TYPICAL MALFUNCTION THRESHOLDS

Detection Criteria	Threshold
P0031, P0051 (Low current):	
A/F sensor heater current	Less than 0.8 A
P0032, P0052 (High current):	
A/F sensor heater current	More than 10 A

COMPONENT OPERATING RANGE

Parameter	Standard Value
A/F sensor heater current	1.8 to 3.4 A at 20°C (68°F)

MONITOR RESULT

Refer to page DI−26 for detailed information.

The test value and test limit information are described as shown in the following table. Check the monitor result and test values after performing the monitor drive pattern (see page DI−27).

- TID (Test Identification Data) is assigned to each emissions−related component.
- TLT (Test Limit Type):
  If TLT is 0, the component is malfunctioning when the test value is higher than the test limit.
  If TLT is 1, the component is malfunctioning when the test value is lower than the test limit.
- CID (Component Identification Data) is assigned to each test value.

TID $07: A/F sensor heater

TLT	CID	Unit Conversion	Description of Test Data	Description of Test Limit
1	$01	Multiply by 0.00017 (A)	Maximum heater current (Bank 1)	Malfunction criteria for A/F sensor heater
1	$10	Multiply by 0.00017 (A)	Maximum heater current (Bank 2)	Malfunction criteria for A/F sensor heater

WIRING DIAGRAM

Refer to DTC P2195 on page DI−312.

INSPECTION PROCEDURE

HINT:

Read freeze frame data using a hand−held tester. Freeze frame data record the engine condition when malfunctions are detected. When troubleshooting, freeze frame data can help determine if the vehicle was moving or stationary, if the engine was warmed up or not, if the air−fuel ratio was lean or rich, and other data, from the time the malfunction occurred.

1	**Check resistance of air−fuel ratio (A/F) sensor heater.**

Component Side:

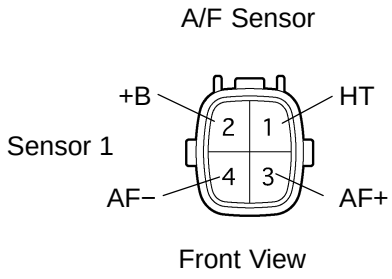

PREPARATION:

Disconnect the air−fuel ratio (A/F) sensor connector.

CHECK:

Measure resistance between the terminals of the A/F sensor connector.

OK:

Standard:

Tester Connection	Specified Condition
HT (1) − +B (2)	1.8 Ω to 3.4 Ω at 20°C (68°F)
HT (1) − AF− (4)	10 kΩ or higher

NG	**Replace air−fuel ratio (A/F) sensor.**

OK

2	**Check A/F relay.**

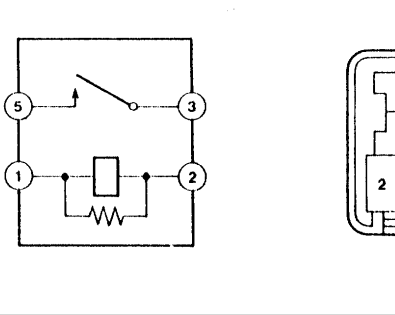

PREPARATION:

Remove the A/F relay from the engine room J/B.

CHECK:

Inspect the A/F relay.

OK:

Standard:

Terminal No.	Condition	Specified Condition
3 − 5	Usually	10 KΩ or higher
3 − 5	Apply B+ between terminals 2 and 4	Below 1 Ω

NG	**Replace A/F relay.**

OK

3	**Check voltage between terminals HA1A, HA2A of ECM connectors and body ground.**

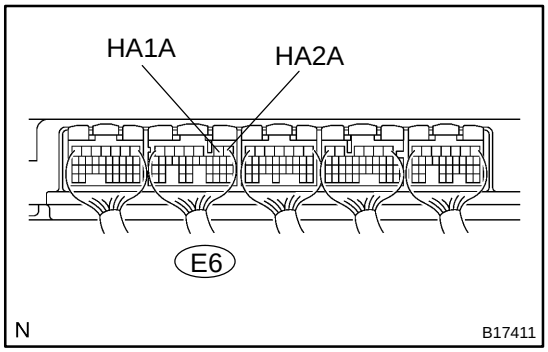

PREPARATION:

Turn the ignition switch to ON.

CHECK:

Measure the voltage between terminals of the ECM connectors and body ground.

HINT:

- Connect terminal HA1A to the bank 1 sensor 1.
- Connect terminal HA2A to the bank 2 sensor 1.

OK:

Standard:

Tester Connection	Specified Condition
HA1A (E6−2) − Body ground	9 V to 14 V
HA2A (E6−1) − Body ground	9 V to 14 V

NG → **Replace ECM (See page SF−66).**

NG

4	**Check for open and short circuit in harness and connector between A/F sensor and ECM, A/F sensor and A/F relay.**

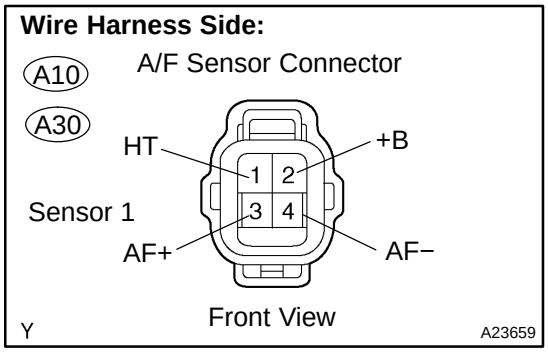

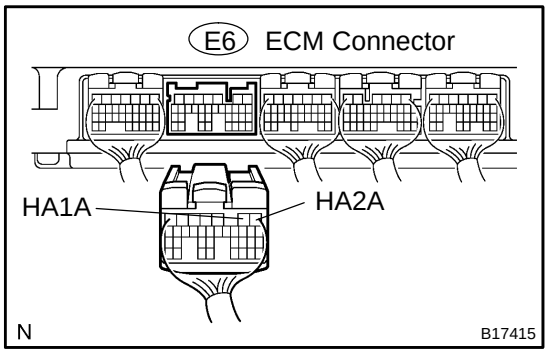

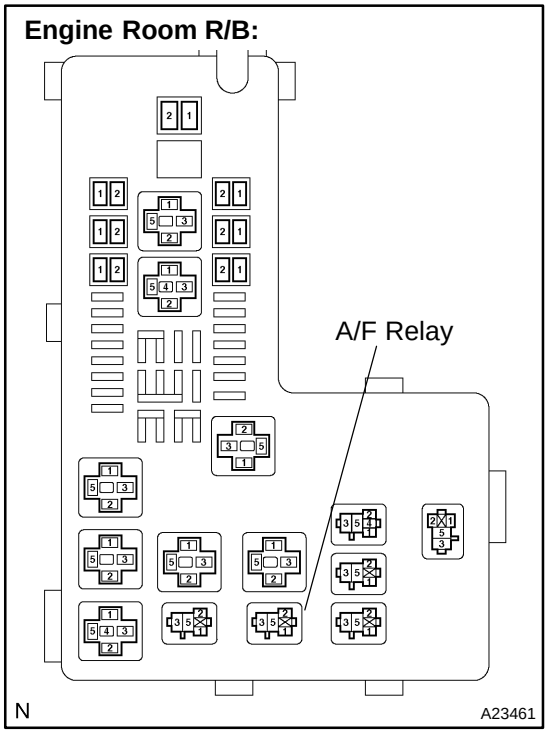

OK

Replace ECM (See page SF−66).

PREPARATION:

(a) Disconnect the A10 or A30 A/F sensor connector.

(b) Disconnect the E6 ECM connector.

CHECK:

Check for resistance between the wire harness side connectors.

OK:

Standard (Check for open):

Symbols (Terminal No.)	Specified condition
HT (A10−1) − HA1A (E6−2)	Below 1 Ω
HT (A30−1) − HA2A (E6−1)	Below 1 Ω

Standard (Check for short):

Symbols (Terminal No.)	Specified condition
HT (A10−1) or HA1A (E6−2) − Body ground	10 kΩ or higher
HT (A30−1) or HA2A (E6−1) − Body ground	10 kΩ or higher

PREPARATION:

(a) Disconnect the A10 or A30 A/F sensor connector.

(b) Remove the A/F sensor heater relay from the engine room R/B.

CHECK:

Check for resistance between the wire harness side connectors.

OK:

Standard (Check for open):

Symbols (Terminal No.)	Specified condition
+B (A10−2) − A/F sensor heater relay (3)	Below 1 Ω
+B (A47−2) − A/F sensor heater relay (3)	Below 1 Ω

Standard (Check for short):

Symbols (Terminal No.)	Specified condition
+B (A10−2) or A/F sensor heater relay (3) − Body ground	10 kΩ or higher
+B (A30−2) or A/F sensor heater relay (3) − Body ground	10 kΩ or higher

NG → **Repair or replace harness or connector.**

DIDT7−01

DTC	**P0037**	**Oxygen Sensor Heater Control Circuit Low (Bank 1 Sensor 2)**

DTC	**P0038**	**Oxygen Sensor Heater Control Circuit High (Bank 1 Sensor 2)**

DTC	**P0057**	**Oxygen Sensor Heater Control Circuit Low (Bank 2 Sensor 2)**

DTC	**P0058**	**Oxygen Sensor Heater Control Circuit High (Bank 2 Sensor 2)**

CIRCUIT DESCRIPTION

To obtain a high purification rate for the CO, HC and NOx components of the exhaust gas, a three−way catalytic converter is used, but for the most efficient use of the three−way catalytic converter, the air−fuel ratio must be precisely controlled so that it is always close to the stoichiometric air−fuel ratio.

The heated oxygen sensor has the characteristic which its output voltage changes suddenly in the vicinity of the stoichiometric air−fuel ratio. This characteristic is used to detect the oxygen concentration in the exhaust gas and provide the ECM with feedback to control the air−fuel ratio.

When the air−fuel ratio becomes LEAN, the oxygen concentration in the exhaust increases and the heated oxygen sensor informs the ECM of the LEAN condition (low voltage, i.e. less than 0.45 V).

When the air−fuel ratio is RICHER than the stoichiometric air−fuel ratio, the oxygen concentration in the exhaust gas is reduced and the heated oxygen sensor informs the ECM of the RICH condition (high voltage, i.e. more than 0.45 V). The ECM judges by the voltage output from the heated oxygen sensor whether the air−fuel ratio is RICH or LEAN and controls the injection time accordingly. However, if malfunction of the heated oxygen sensor causes output of abnormal voltage, this disables the ECM for performing an accurate air−fuel ratio control. The heated oxygen sensors include a heater which heats the zirconia element. The heater is controlled by the ECM. When the intake air volume is low (the temperature of the exhaust gas is low) current flows to the heater to heat the sensor for accurate oxygen concentration detection.

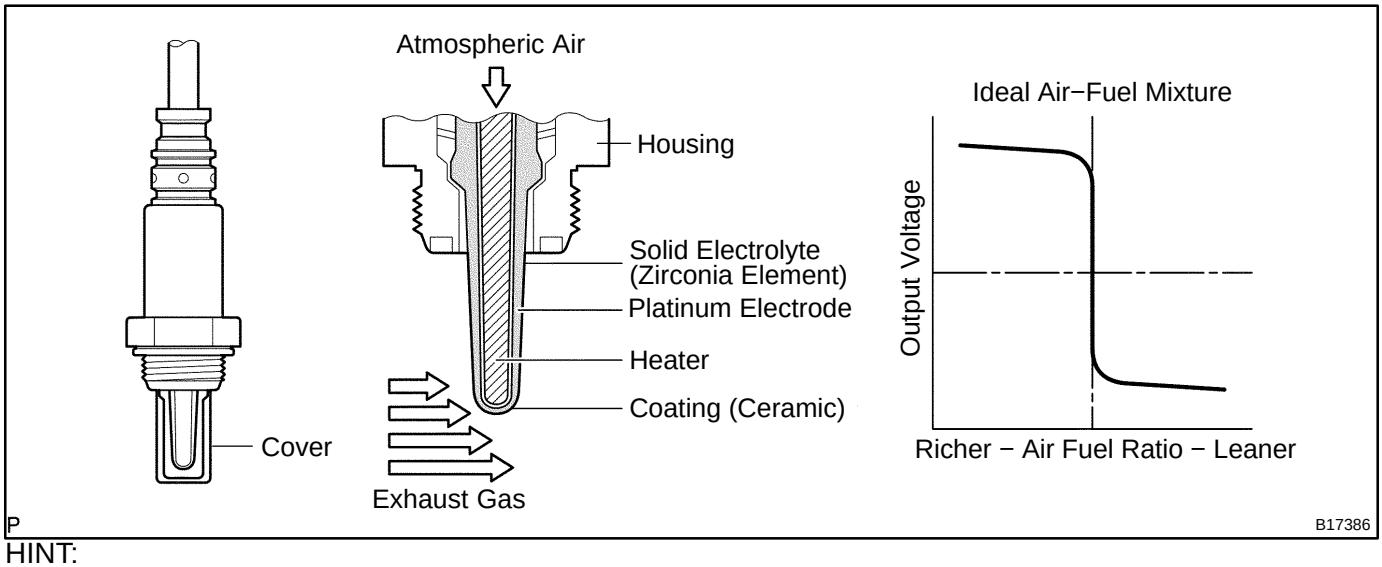

HINT:

The ECM provides a pulse width modulated control circuit to adjust current through the heater. The heated oxygen sensor heater circuit uses a relay on the B+ side of the circuit.

Reference (Bank 1 Sensor 1 System Drawing):

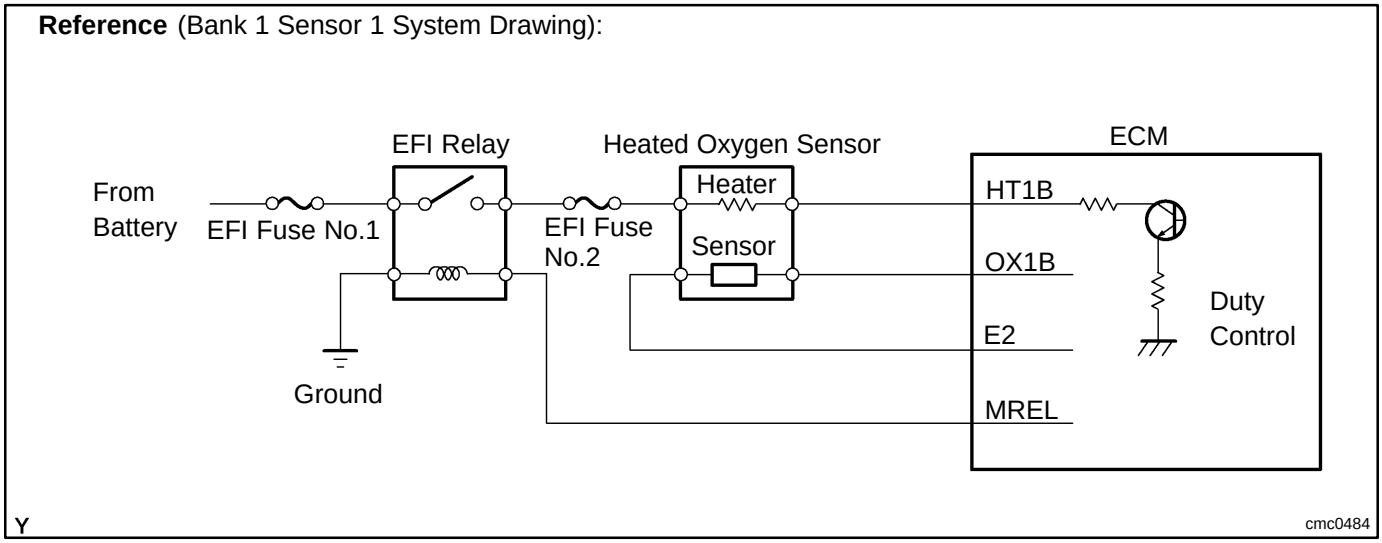

DTC No.	DTC Detecting Condition	Trouble Area
P0037 P0057	Heater current is less than 0.3 A when the heater operates with more than 10.5 V positive battery voltage	• Open in heater circuit of heated oxygen sensor • Heated oxygen sensor heater • EFI relay • ECM
P0038 P0058	When heater operates, heater current exceeds 2.0 A	• Short in heater circuit of heated oxygen sensor • Heated oxygen sensor heater • EFI relay • ECM

HINT:

- Bank 1 refers to bank that includes cylinder No. 1.
- Bank 2 refers to bank that does not includes cylinder No. 1.
- Sensor 1 refers to the sensor closer to the engine assembly.
- Sensor 2 refers to the sensor farther away from the engine assembly.

MONITOR DESCRIPTION

The sensing portion of the heated oxygen sensor has a zirconia element which is used to detect oxygen concentration in the exhaust. If the zirconia element is at the proper temperature and difference of the oxygen concentration between the inside and outside surface of sensor is large, the zirconia element will generate voltage signals. In order to increase the oxygen concentration detecting capacity in the zirconia element, the ECM supplements the heat from the exhaust with heat from a heating element inside the sensor. When current in the sensor is out of the standard operating range, the ECM interprets this as a fault in the heated oxygen sensor and sets a DTC.

Example:

The ECM will set a high current DTC if the current in the sensor is more than 2.0 A when the heater is OFF. Similarly, the ECM will set a low current DTC if the current is less than 0.3 A when the heater is ON.

MONITOR STRATEGY

Related DTCs	P0037	Rear HO2S heater (Bank 1) range check (Low Current)
	P0038	Rear HO2S heater (Bank 1) range check (High Current)
	P0057	Rear HO2S heater (Bank 2) range check (Low Current)
	P0058	Rear HO2S heater (Bank 2) range check (High Current)
Required sensors/components	Main sensors/components	HO2S heater
	Related sensors/components	Vehicle speed sensor (VSS)
Frequency of operation	Continuous	
Duration	0.3 sec.	
MIL operation	Immediate	
Sequence of operation	None	

TYPICAL ENABLING CONDITIONS

Item	Specification	
	Minimum	Maximum
The monitor will run whenever these DTCs are not present	See page DI−18	
P0037, P0057 (Low current):		
Battery voltage	10.5 V	−
Engine	Running	
Starter	OFF	
Intrusive heating	Not operating	
All heater is turned OFF and intrusive heating is operated when the following conditions are met	Condition (a) and (b)	
(a) Heater	ON	
(b) Heater current	−	0.3 A
P0038, P0058 (High current):		
Case 1:		
Battery voltage	10.5 V	−
Engine	Running	
Starter	OFF	
Intrusive heating	Not operating	
Case 2:		
Battery voltage	10.5 V	−
All heater is turned OFF and intrusive heating is operated when the following conditions are met	Condition (a) and (b)	
(a) Heater	ON	
(b) Heater current	2 A	−

TYPICAL MALFUNCTION THRESHOLDS

Detection Criteria	Threshold
P0037, P0057 (Low current):	
HO2S heater current during intrusive heating	Less than 0.3 A (when battery voltage is 10.5 V or more)
P0038, P0058 (High current):	
Case 1:	
HO2S heater current	2 A or more
Case 2:	
HO2S heater current during intrusive heating	More than 2 A

COMPONENT OPERATING RANGE

Parameter	Standard Value
HO2S heater current	0.4 to 1 A (at idle, warmed−up engine and +B: 11 to 14 V)

MONITOR RESULT

The test value and test limit information are described as shown in the following table. Check the monitor result and test values after performing the monitor drive pattern (see page DI−27).

- TID (Test Identification Data) is assigned to each emissions−related component.
- TLT (Test Limit Type):
  If TLT is 0, the component is malfunctioning when the test value is higher than the test limit.
  If TLT is 1, the component is malfunctioning when the test value is lower than the test limit.
- CID (Component Identification Data) is assigned to each test value.

TID $04: HO2S heater

TLT	CID	Unit Conversion	Description of Test Data	Description of Test Limit
1	$02	Multiply by 0.000076 (A)	Maximum HO2S heater current (Bank 1 Sensor 2)	Malfunction threshold for HO2S heater
1	$20	Multiply by 0.000076 (A)	Maximum HO2S heater current (Bank 2 Sensor 2)	Malfunction threshold for HO2S heater

WIRING DIAGRAM

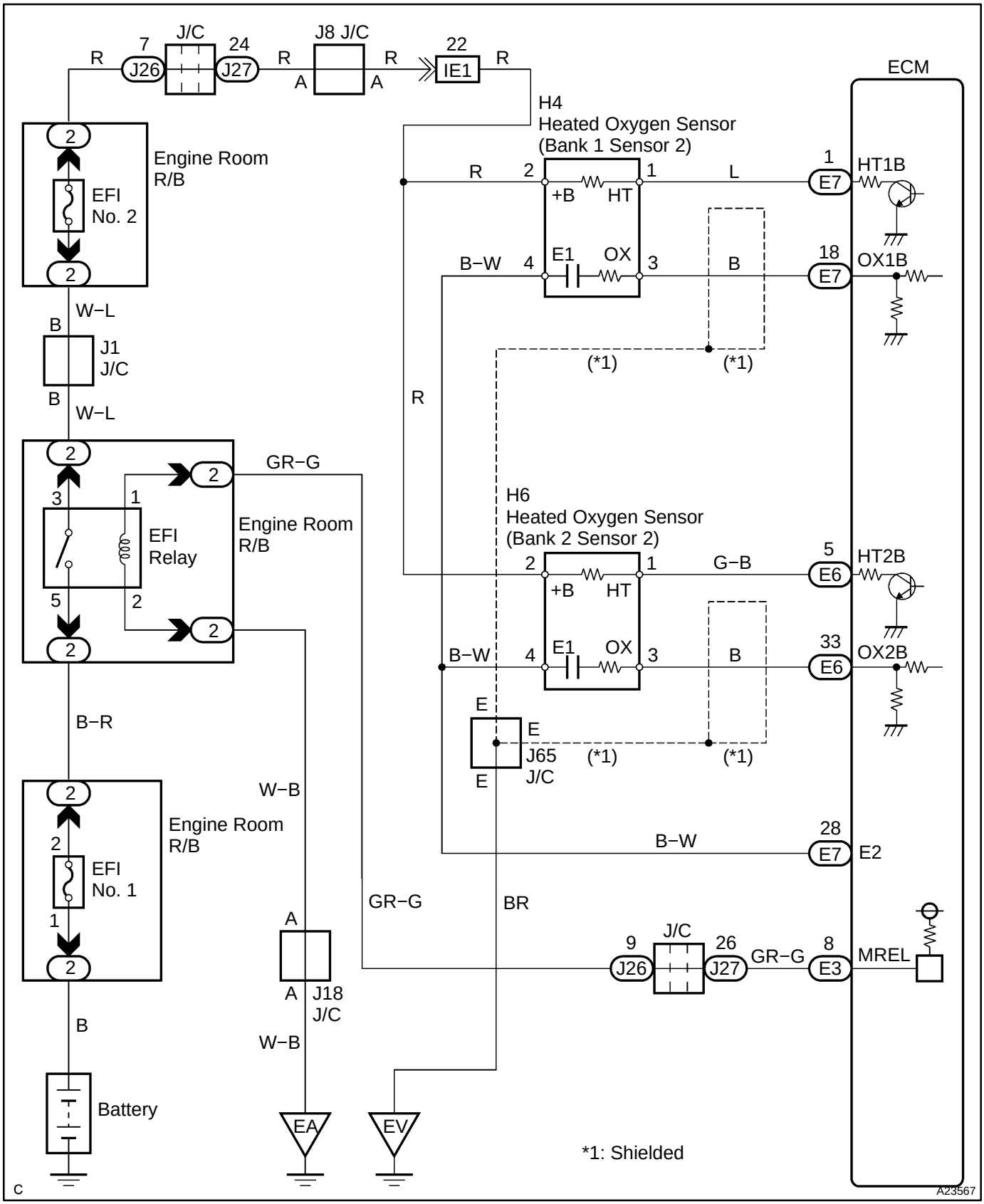

INSPECTION PROCEDURE

HINT:

Read freeze frame data using hand−held tester. Because freeze frame records the engine conditions when the malfunction is detected. When troubleshooting, it is useful to determine whether the vehicle was running or stopped, the engine was warmed up or not, the air−fuel ratio was lean or rich, etc. when a malfunction occurred.

1	**Check resistance of heated oxygen sensor heater.**

Components Side:

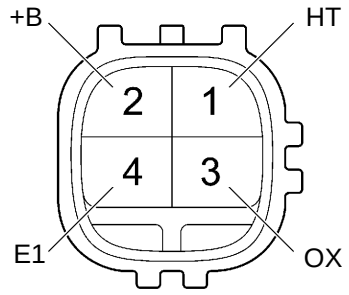

PREPARATION:

Disconnect the H4 or H6 heated oxygen sensor connector.

CHECK:

Measure resistance between terminals of the heated oxygen sensor.

OK:

Standard:

Tester Connection	Specified Condition
HT (H4−1) − +B (H4−2)	11 to 16 Ω at 20°C (68°F)
HT (H6−1) − +B (H6−2)	11 to 16 Ω at 20°C (68°F)

NG	**Replace heated oxygen sensor.**

OK

2	**Check EFI relay.**

EFI Relay

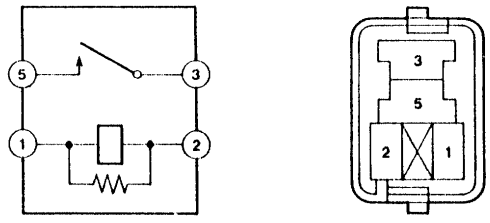

PREPARATION:

Remove the EFI relay from the engine room J/B.

CHECK:

Inspect the EFI relay.

OK:

Standard:

Terminal No.	Condition	Specified Condition
3 − 5	Usually	10 KΩ or higher
3 − 5	Apply B+ between terminals 1 and 2	Below 1 Ω

NG	**Replace EFI relay.**

OK

3	**Check voltage between terminals HT1B, HT2B of ECM connectors and body ground.**

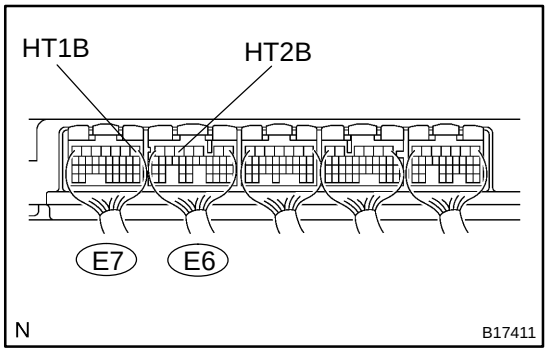

PREPARATION:

Turn the ignition switch ON.

CHECK:

Measure the voltage between terminals of the ECM connectors and body ground.

OK:

Standard:

Tester Connection	Specified Condition
HT1B (E7−1) − Body ground	9 to 14 V
HT2B (E6−5) − Body ground	9 to 14 V

HINT:

- Connect terminal HT1B to the bank 1 sensor 2.
- Connect terminal HT2B to the bank 2 sensor 2.

NG → **Replace ECM (See page SF−66).**

NG

Check and repair harness or connector between EFI relay and heated oxygen sensor, and heated oxygen sensor and ECM (See page SF−66).

DIDTP−01

DTC	P0441	Evaporative Emission Control System Incorrect Purge Flow

DTC SUMMARY

DTCs	Monitoring Items	Malfunction Detection Conditions	Trouble Areas	Detection Timings	Detection Logic
P0441	Purge VSV (Vacuum Switching Valve) stuck open	Vacuum pump creates negative pressure (vacuum) in EVAP system and EVAP system pressure measured. 0.02 inch leak pressure standard is measured at the start and at the end of the leak check. If stabilized pressure higher than [second 0.02 inch leak pressure standard x 0.2], ECM determines that purge VSV stuck open	• Purge VSV • Connector/wire harness (Purge VSV − ECM) • ECM • Pump module • Leakage from EVAP system	While ignition Switch OFF	2 trip
P0441	Purge VSV stuck closed	After EVAP leak check performed, purge VSV turned ON (open), and atmospheric air introduced into EVAP system. 0.02 inch leak pressure standard is measured at the start and at the end of the leak check. If pressure does not return to near atmospheric pressure, ECM determines that purge valve stuck closed	• Purge VSV • Connector/wire harness (Purge VSV − ECM) • ECM • Pump module • Leakage from EVAP system	While ignition Switch OFF	2 trip
P0441	Purge flow	While engine running, following conditions successively met: • Negative pressure not created in EVAP system when purge VSV turned ON (open) • EVAP system pressure change less than 0.5 kPa (3.75 mmHg) when vent valve turned ON (closed) • Atmospheric pressure change before and after purge flow monitor less than 0.1 kPa (0.75 mmHg)	• Purge VSV • Connector/wire harness (Purge VSV − ECM) • Leakage from EVAP line (Purge VSV − Intake manifold) • ECM	While engine running	2 trip

CIRCUIT DESCRIPTION

The circuit description can be found in the EVAP (Evaporative Emission) Inspection Procedure (see page DI−368).

MONITOR DESCRIPTION

The two monitors, Key−Off and Purge Flow, are used to detect malfunctions relating to DTC P0441. The Key−Off monitor is initiated by the ECM internal timer, known as the soak timer, 5 hours* after the ignition switch is turned to OFF. The purge flow monitor runs while the engine is running.

1. KEY−OFF MONITOR

5 hours* after the ignition switch is turned OFF, the electric vacuum pump creates negative pressure (vacuum) in the EVAP (Evaporative Emission) system. The ECM monitors for leaks and actuator malfunctions based on the EVAP pressure.

HINT:

*: If the engine coolant temperature is not below 35°C (95°F) 5 hours after the ignition switch is turned off, the monitor check starts 2 hours later. If it is still not below 35°C (95°F) 7 hours after the ignition switch is turned off, the monitor check starts 2.5 hours later.

Sequence	Operations	Descriptions	Duration
−	ECM activation	Activated by soak timer, 5 hours (7 or 9.5 hours) after ignition switch turned to OFF.	−
A	Atmospheric pressure measurement	Vent valve turned OFF (vent) and EVAP system pressure measured by ECM in order to register atmospheric pressure. If EVAP pressure is not between 70 kPa and 110 kPa (525 mmHg and 825 mmHg), ECM cancels EVAP system monitor.	10 seconds
B	First 0.02 inch leak pressure measurement	In order to determine 0.02 inch leak pressure standard, vacuum pump creates negative pressure (vacuum) through 0.02 inch orifice and then ECM checks if vacuum pump and vent valve operate normally.	60 seconds
C	EVAP system pressure measurement	Vent valve turned ON (closed) to shut EVAP system. Negative pressure (vacuum) created in EVAP system, and EVAP system pressure then measured. Write down the measured value as it will be used in the leak check. If EVAP pressure does not stabilize within 15 minutes, ECM cancels EVAP system monitor.	15 minutes*
D	Purge VSV monitor	Purge VSV opened and then EVAP system pressure measured by ECM. Large increase indicates normal.	10 seconds
E	Second 0.02 inch leak pressure measurement	Leak check is performed after second 0.02 inch leak pressure standard is measured. If stabilized system pressure higher than second 0.02 inch leak pressure standard, ECM determines that EVAP system leaking.	60 seconds
F	Final check	Atmospheric pressure measured and then monitoring result recorded by ECM.	−

* If only a small amount of fuel is in the fuel tank, it takes longer for the EVAP pressure to stabilize.

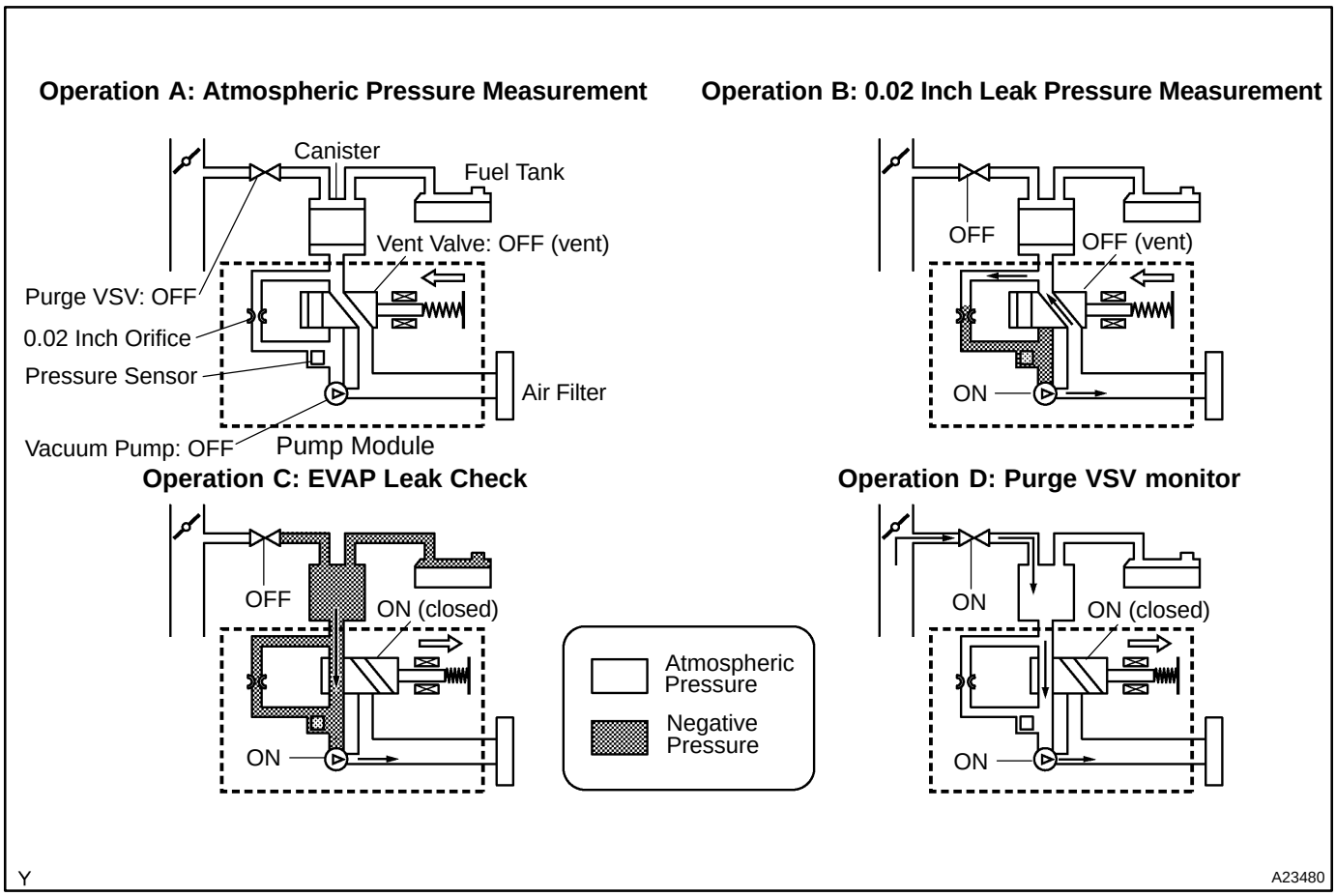

(a) Purge VSV stuck open

In operation C, the vacuum pump creates negative pressure (vacuum) in the EVAP (Evaporative Emission) system. The EVAP system pressure is then measured by the ECM using the pressure sensor. If the stabilized system pressure is higher than [second 0.02 inch leak pressure standard x 0.2], the ECM interprets this as the purge VSV (Vacuum Switching Valve) being stuck open. The ECM illuminates the MIL and sets the DTC (2 trip detection logic).

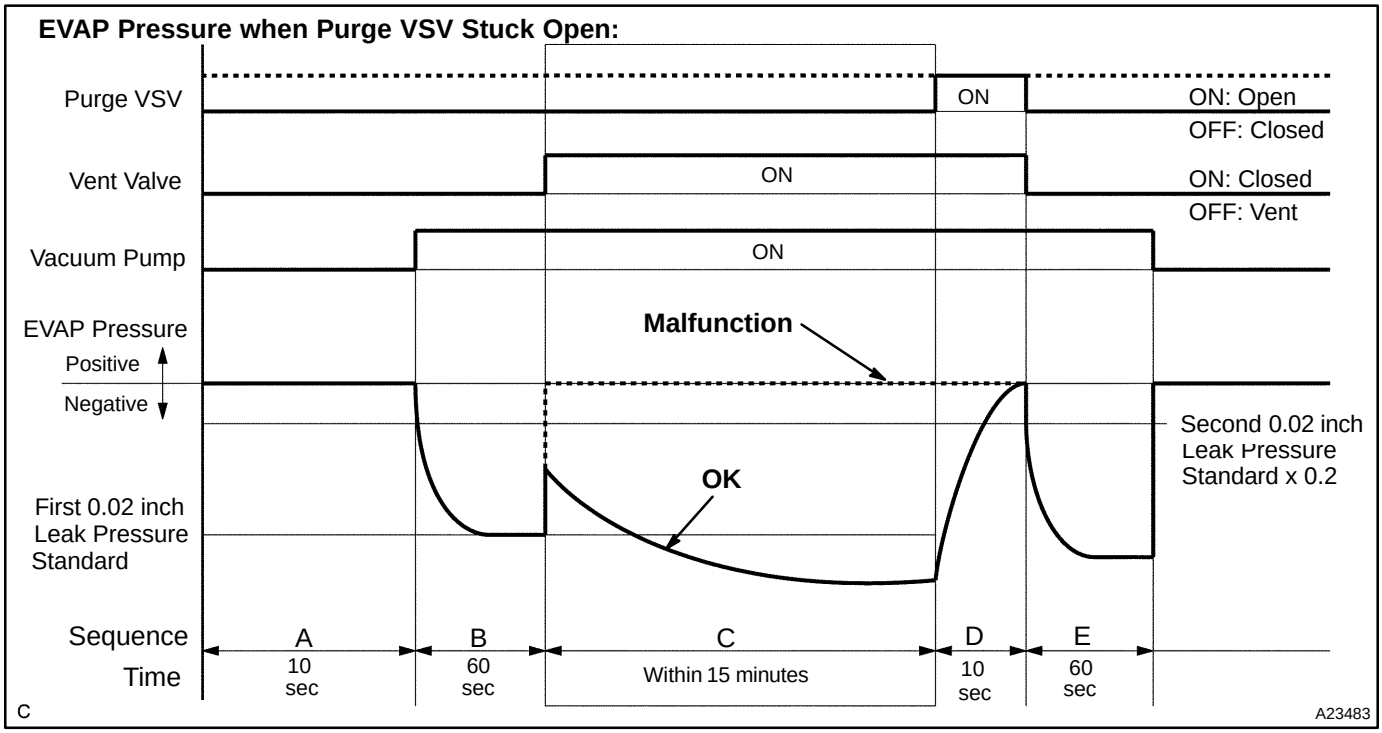

(b) Purge VSV stuck closed

In operation D, the pressure sensor measures the EVAP system pressure. The pressure measurement for purge VSV monitor is begun when the purge VSV is turned ON (open) after the EVAP leak check. When the measured pressure indicates an increase of 0.3 kPa (2.25 mmHg) or more, the purge VSV is functioning normally. If the pressure does not increase, the ECM interprets this as the purge VSV being stuck closed. The ECM illuminates the MIL and sets the DTC (2 trip detection logic).

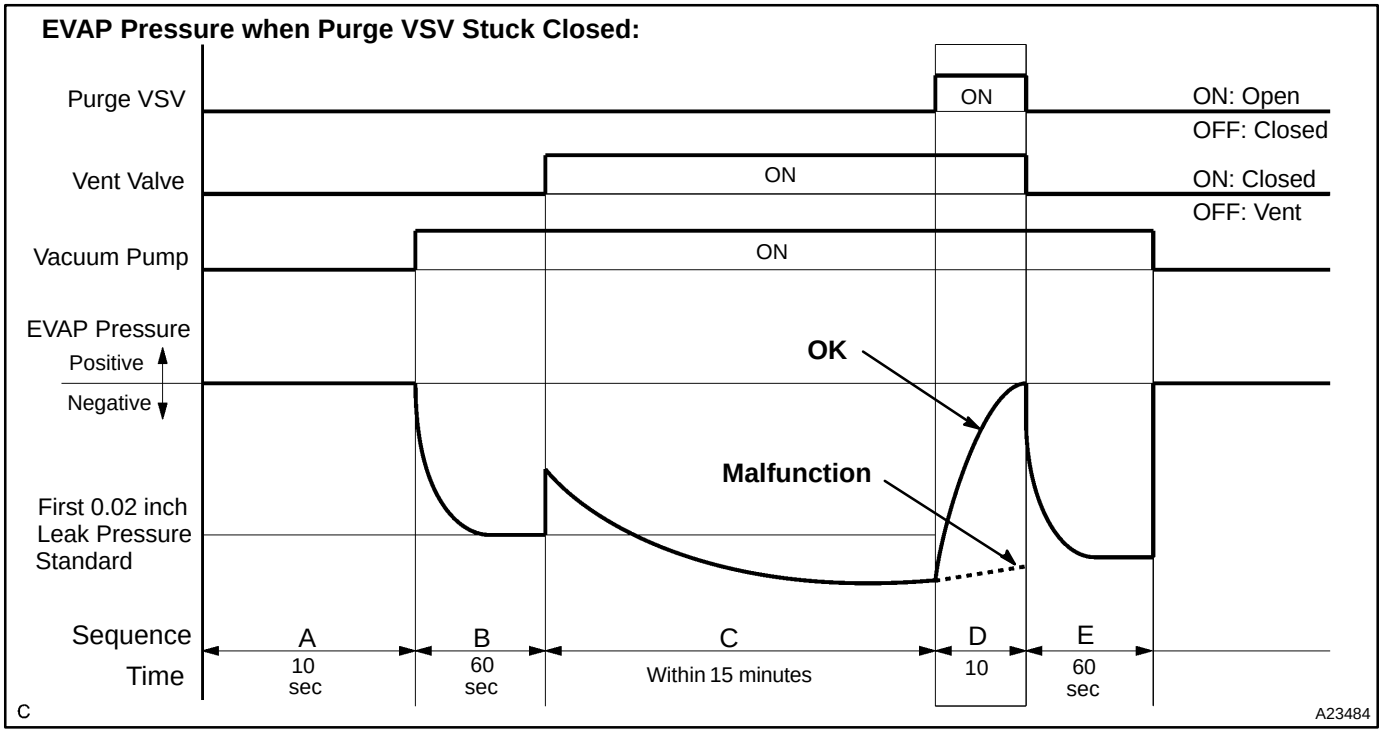

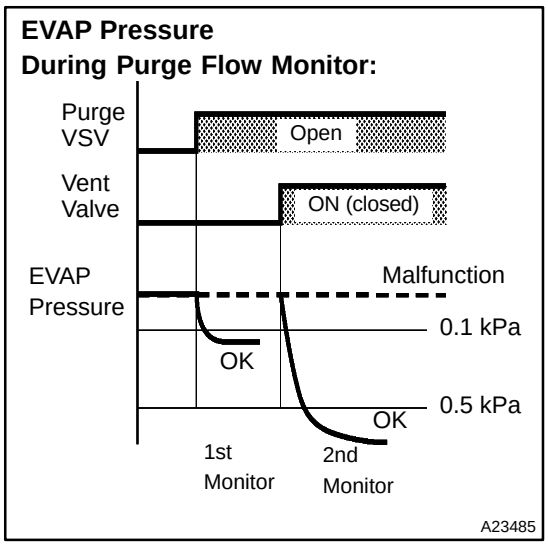

2. PURGE FLOW MONITOR

The purge flow monitor consists of the two step monitors. The 1st monitor is conducted every time and the 2nd monitor is activated if necessary.

- The 1st monitor
  While the engine is running and the purge VSV (Vacuum Switching Valve) is ON (open), the ECM monitors the purge flow by measuring the EVAP pressure change. If negative pressure is not created, the ECM begins the 2nd monitor.
- The 2nd monitor
  The vent valve is turned ON (closed) and the EVAP pressure is then measured. If the variation in the pressure is less than 0.5 kPa (3.75 mmHg), the ECM interprets this as the purge VSV being stuck closed, and illuminates the MIL and sets DTC P0441 (2 trip detection logic).

Atmospheric pressure check:

In order to ensure reliable malfunction detection, the variation between the atmospheric pressures, before and after conduction of the purge flow monitor, is measured by the ECM.

MONITOR STRATEGY

Related DTCs	P0441	Purge VSV stuck open
		Purge VSV stuck closed
		Purge flow
Required sensors/components	Purge VSV, Pump module	
Frequency of operation	Once per driving cycle	
Duration	Purge VSV stuck open and closed: Within 15 min. (varies with amount of fuel in tank) Purge flow: Within 10 min.	
MIL operation	2 driving cycle	
Sequence of operation	None	

TYPICAL ENABLING CONDITIONS

Item	Specification	
	Minimum	Maximum
The monitor will run whenever these DTCs are not present	See page DI−18	
Purge VSV stuck open and closed:		
Atmospheric pressure	70 to 110 kPa (525 to 825 mmHg)	
Battery voltage	10.5 V	−
Vehicle speed	−	2.5 mph (4 km/h)
Ignition switch	OFF	
EVAP pressure sensor malfunction (P0450, P0452, P0453)	Not detected	
EVAP canister purge valve	Not operated by scan tool	
EVAP canister vent valve	Not operated by scan tool	
EVAP leak detection pump	Not operated by scan tool	
Both of the following conditions are met before IG switch OFF	Condition 1 and 2	
1. Duration that vehicle is driven	5 min.	−
2. EVAP purge operation	Performed	
ECT	4.4 to 35°C (40 to 95°F)	
IAT	4.4 to 35°C (40 to 95°F)	
Time after key off	5 or 7 or 9.5 hours	
EVAP key−off monitor sequence	1 to 8	
1. Atmospheric pressure	−	
Next sequence is run if the following condition is set	−	
Atmospheric pressure change	−	0.3 kPa (2.25 mmHg) for 1 sec.
2. First reference pressure measurement	−	
Next sequence is run if all of the following conditions are set	Condition 1, 2 and 3	
1. EVAP pressure just after reference pressure measurement start	−	−1 kPa (−7.5 mmHg)
2. Reference pressure	−4.85 to −1.057 kPa (−36.38 to −7.93 mmHg)	
3. Reference pressure	Saturated	

3. EVAP canister vent valve close stuck check	−	
Next sequence is run if the following condition is set	−	
EVAP pressure change after vent valve is ON	0.3 kPa (2.25 mmHg)	−
4. Vacuum introduction	−	
Next sequence is run if the following condition is set	Condition 1 and 2	
EVAP pressure	Saturated within 12 minutes	
5. EVAP canister purge valve close stuck check	−	
Next sequence is run if the following condition is set	−	
EVAP pressure change after purge valve is open	0.3 kPa (2.25 mmHg)	−
6. Second reference pressure measurement	−	
Next sequence is run if all of the following conditions are set	Condition 1, 2, 3 and 4	
1. EVAP pressure just after reference pressure measurement	−	−1 kPa (−7.5 mmHg)
2. Reference pressure	−4.85 to −1.057 kPa (−36.4 to −7.92 mmHg)	
3. Reference pressure	Saturated	
4. Difference between first reference pressure and second reference pressure	−	0.7 kPa (5.25 mmHg)
7. Leak check	−	
Next sequence is run if the following condition is set	−	
EVAP pressure when vacuum introduction is complete	−	Less than second reference pressure
8. Atmospheric pressure measurement	−	
EVAP monitor is complete if the following condition is set	−	
Atmospheric pressure difference between sequence 1 and 8	−	0.3 kPa (2.25 mmHg)
Purge flow:		
Engine condition	Running	
ECT	4.4°C (40°F)	−
IAT	4.4°C (40°F)	−
EVAP pressure sensor	Not detected	
EVAP canister purge valve	Not operated by scan tool	
EVAP system check	Not operated by scan tool	
Battery voltage	10 V	−
Purge duty cycle	8 %	−

TYPICAL MALFUNCTION THRESHOLDS

Detection Criteria	Threshold
Purge VSV stuck open:	
EVAP pressure when vacuum introduction is complete	Higher than reference pressure x 0.2
Purge VSV stuck closed:	
EVAP pressure change after EVAP canister purge valve is open	Less than 0.3 kPa (2.25 mmHg)
Purge flow:	
Both of the following conditions are met	Condition 1 or 2
1. EVAP pressure change when purge flow is started	Less than 0.1 kPa (0.75 mmHg)
2. FTP change during purge operation when vent valve is closed	Less than 0.5 kPa (3.75 mmHg)

MONITOR RESULT (MODE 06 DATA)

Refer to page DI−26 for detailed information on Monitor Result.

INSPECTION PROCEDURE

Refer to the EVAP Inspection Procedure (see page DI−368).

DIDTR−01

DTC	P0455	Evaporative Emission Control System Leak Detected (Gross Leak)

DTC	P0456	Evaporative Emission Control System Leak Detected (Very Small Leak)

DTC SUMMARY

DTC	Monitoring Items	Malfunction Detection Conditions	Trouble Areas	Detection Timings	Detection Logic
P0455	EVAP gross leak	Vacuum pump creates negative pressure (vacuum) in EVAP system and EVAP system pressure measured. 0.02 inch leak pressure standard is measured at the start and at the end of the leak check. If stabilized pressure higher than [second 0.02 inch leak pressure standard x 0.2], ECM determines that EVAP system has large leakage.	• Fuel tank cap (loose) • Leakage from EVAP line (Canister − Fuel tank) • Leakage from EVAP line (Purge VSV − Canister) • Pump module • Leakage from fuel tank • Leakage from canister	While ignition switch OFF	2 trip
P0456	EVAP small leak	Vacuum pump creates negative pressure (vacuum) in EVAP system and EVAP system pressure measured. 0.02 inch leak pressure standard is measured at the start and at the end of the leak check. If stabilized pressure larger than second 0.02 inch leak pressure, ECM determines that EVAP system has small leakage.	Same above	While ignition switch OFF	2 trip

CIRCUIT DESCRIPTION

The circuit description can be found in the EVAP (Evaporative Emission) Inspection Procedure (see page DI−368).

MONITOR DESCRIPTION

5 hours* after the ignition switch is turned OFF, the electric vacuum pump creates negative pressure (vacuum) in the EVAP (Evaporative Emission) system. The ECM monitors for leaks and actuator malfunctions based on the EVAP pressure.

HINT:

*: If the engine coolant temperature is not below 35°C (95°F) 5 hours after the ignition switch is turned off, the monitor check starts 2 hours later. If it is still not below 35°C (95°F) 7 hours after the ignition switch is turned off, the monitor check starts 2.5 hours later.

Sequence	Operations	Descriptions	Duration
−	ECM activation	Activated by soak timer, 5 hours (7 or 9.5 hours) after ignition switch turned to OFF.	−
A	Atmospheric pressure measurement	Vent valve turned OFF (vent) and EVAP system pressure measured by ECM in order to register atmospheric pressure. If EVAP pressure is not between 70 kPa and 110 kPa (525 mmHg and 825 mmHg), ECM cancels EVAP system monitor.	10 seconds
B	First 0.02 inch leak pressure measurement	In order to determine 0.02 inch leak pressure standard, vacuum pump creates negative pressure (vacuum) through 0.02 inch orifice and them ECM checks if vacuum pump and vent valve operate normally.	60 seconds
C	EVAP system pressure measurement	Vent valve turned ON (closed) to shut EVAP system. Negative pressure (vacuum) created in EVAP system, and EVAP system pressure then measured. Write down the measured value as it will be used in the leak check. If EVAP pressure does not stabilize within 15 minutes, ECM cancels EVAP system monitor.	15 minutes*
D	Purge VSV monitor	Purge VSV opened and then EVAP system pressure measured by ECM. Large increase indicates normal.	10 seconds
E	Second 0.02 inch leak pressure measurement	Leak check is performed after second 0.02 inch leak pressure standard is measured. If stabilized system pressure higher than second 0.02 inch leak pressure standard, ECM determines that EVAP system leaking.	60 seconds
F	Final check	Atmospheric pressure measured and then monitoring result recorded by ECM.	−

* If only a small amount of fuel is in the fuel tank, it takes longer for the EVAP pressure to stabilize.

Operation A: Atmospheric Pressure Measurement

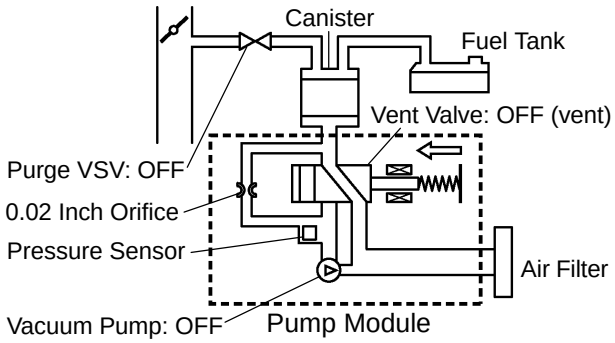

Operation B: 0.02 Inch Leak Pressure Measurement

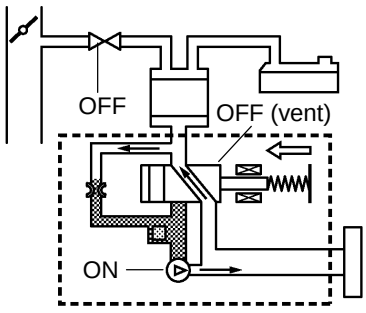

Operation C: EVAP Leak Check

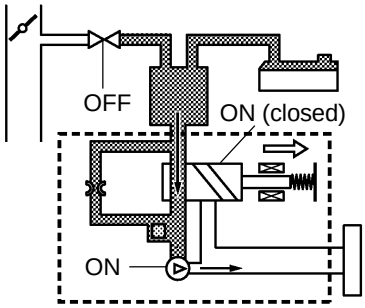

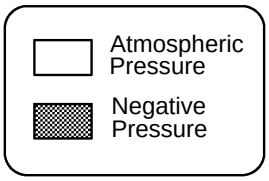

Operation D: Purge VSV monitor

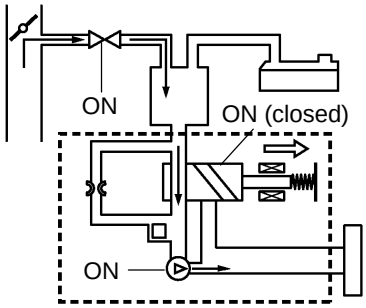

Y

B17399

(a) P0455: EVAP (Evaporative Emission) gross leak

In operation C, the vacuum pump creates negative pressure (vacuum) in the EVAP system and the EVAP system pressure is measured. If the stabilized system pressure is higher than [second 0.02 inch leak pressure standard x 0.2] (near atmospheric pressure), the ECM determines that the EVAP system has a large leakage, illuminates the MIL and sets the DTC (2 trip detection logic).

(b) P0456: EVAP very small leak

In operation C, the vacuum pump creates negative pressure (vacuum) in the EVAP system and the EVAP system pressure is measured. If the stabilized system pressure is higher than second 0.02 inch leak pressure standard, the ECM determines that the EVAP system has a small leakage, illuminates the MIL and sets the DTC (2 trip detection logic).

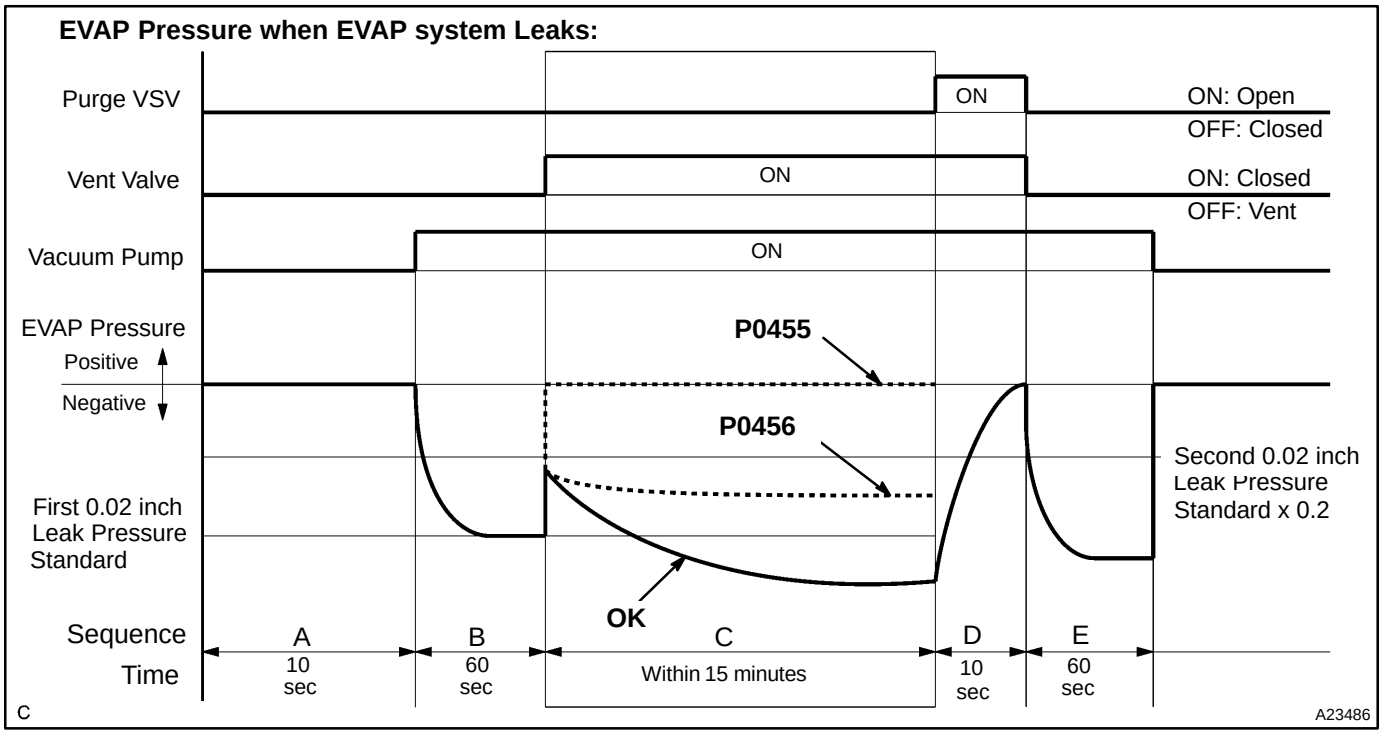

MONITOR STRATEGY

Related DTCs	P0455	Gross leak detected
	P0456	Very small leak (0.020 inch hole) detected
Required sensors/components	Purge VSV, Pump module	
Frequency of operation	Once per driving cycles	
Duration	Within 15 min. (varies with amount of fuel in tank)	
MIL operation	2 driving cycles	
Sequence of operation	None	

TYPICAL ENABLING CONDITIONS

Item	Specification	
	Minimum	Maximum
The monitor will run whenever these DTCs are not present	See page DI−18	
Atmospheric pressure	70 to 110 kPa (525 to 825 mmHg)	
Battery voltage	10.5 V	−

Vehicle speed	−	2.5 mph (4 km/h)
Ignition switch	OFF	
EVAP pressure sensor malfunction (P0450, P0452, P0453)	Not detected	
EVAP canister purge valve	Not operated by scan tool	
EVAP canister vent valve	Not operated by scan tool	
EVAP leak detection pump	Not operated by scan tool	
Both of the following conditions are met before IG switch OFF	Condition 1 and 2	
1. Duration that vehicle is driven	5 min.	−
2. EVAP purge operation	Performed	
ECT	4.4 to 35˚C (40 to 95˚F)	
IAT	4.4 to 35˚C (40 to 95˚F)	
Time after key off	5 or 7 or 9.5 hours	
EVAP key−off monitor sequence	1 to 8	
1. Atmospheric pressure	−	
Next sequence is run if the following condition is set	−	
Atmospheric pressure change	−	0.3 kPa (2.25 mmHg) for 1 sec.
2. First reference pressure measurement	−	
Next sequence is run if all of the following conditions are set	Condition 1, 2 and 3	
1. EVAP pressure just after reference pressure measurement start	−	−1 kPa (−7.5 mmHg)
2. Reference pressure	−4.85 to −1.057 kPa (−36.38 to −7.93 mmHg)	
3. Reference pressure	Saturated	
3. EVAP canister vent valve close stuck check	−	
Next sequence is run if the following condition is set	−	
EVAP pressure change after vent valve is ON	0.3 kPa (2.25 mmHg)	−
4. Vacuum introduction	−	
Next sequence is run if the following condition is set	Condition 1 and 2	
EVAP pressure	Saturated within 12 minutes	
5. EVAP canister purge valve close stuck check	−	
Next sequence is run if the following condition is set	−	
EVAP pressure change after purge valve is open	0.3 kPa (2.25 mmHg)	−

6. Second reference pressure measurement	−	
Next sequence is run if all of the following conditions are set	Condition 1, 2, 3 and 4	
1. EVAP pressure just after reference pressure measurement	−	−1 kPa (−7.5 mmHg)
2. Reference pressure	−4.85 to −1.057 kPa (−36.4 to −7.92 mmHg)	
3. Reference pressure	Saturated	
4. Difference between first reference pressure and second reference pressure	−	0.7 kPa (5.25 mmHg)
7. Leak check	−	
Next sequence is run if the following condition is set	−	
EVAP pressure when vacuum introduction is complete	−	Less than second reference pressure
8. Atmospheric pressure	−	
EVAP monitor is complete is the following condition is set	−	
Atmospheric pressure difference between sequence 1 and 8	−	0.3 kPa (2.25 mmHg)

TYPICAL MALFUNCTION THRESHOLDS

Detection Criteria	Threshold
Small leak (0.020 inch) malfunction detection:	
EVAP pressure when vacuum introduction is complete	Between reference pressure and reference pressure x 0.2
Gross leak detection:	
EVAP pressure when vacuum introduction is complete	Higher than reference pressure x 0.2

MONITOR RESULT (MODE 06 DATA)

Refer to page DI−26 for detailed information.

INSPECTION PROCEDURE

Refer to the EVAP Inspection Procedure (see page DI−368).

DIDTT−01

DTC	P0504	Brake Switch ”A”/”B” Correlation

CIRCUIT DESCRIPTION

In addition to turning on the stop lamps, the stop lamp switch signals are used for a variety of engine, transmission, and suspension functions as well as being an input for diagnostic checks. It is important that the switch operates properly, therefore this switch is designed with two complementary signal outputs: STP and STI−. The ECM analyzes these signal outputs to detect malfunctions in the stop lamp switch.

HINT:

Normal condition is as shown in the table.

Signal	Brake pedal released	In transition	Brake pedal depressed
STP	OFF	ON	ON
STI−	ON	ON	OFF

DTC No.	DTC Detection Condition	Trouble Area
P0504	Conditions (a), (b) and (c) continue for 0.5 sec. or more: (a) Ignition switch ON (b) Brake pedal released (c) STP signal is OFF when the STI− signal is OFF	• Short in stop lamp switch signal circuit • Stop lamp fuse • Stop lamp switch • ECM

WIRING DIAGRAM

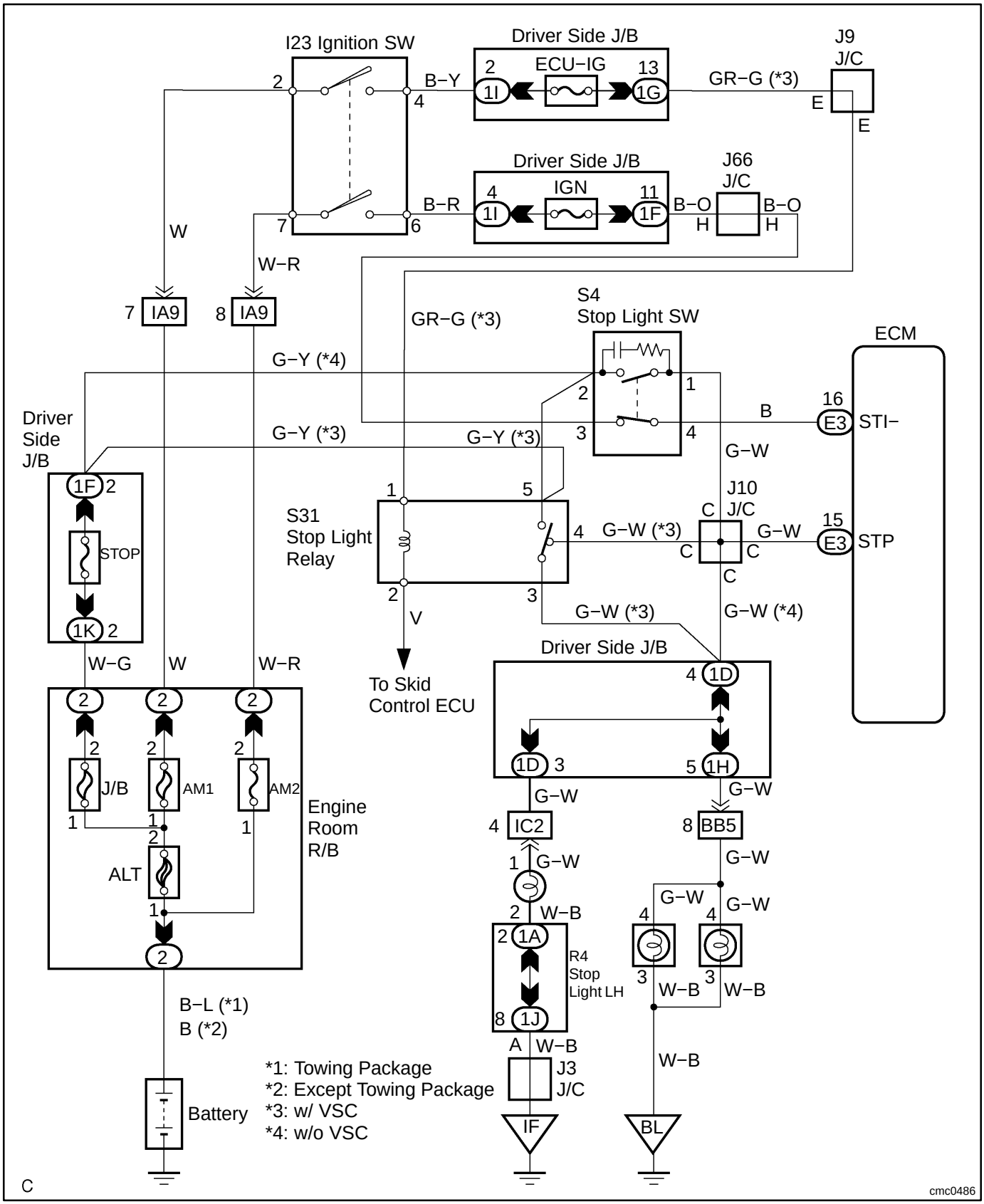

INSPECTION PROCEDURE

HINT:

Read freeze frame data using the hand−held tester. Freeze frame data records the engine conditions when a malfunction is detected. When troubleshooting, freeze frame data can help determine if the vehicle was running or stopped, if the engine was warmed up or not, if the air−fuel ratio was lean or rich, as well as other data from the time when a malfunction occurred.

1	**Check operation of stop light.**

CHECK:

Check if the stop lights come on and go off normally when the brake pedal is depressed and released.

NG → **Check and repair stop light circuit.**

OK

2	**Check stop light switch (See page BE−70).**

NG → **Replace stop light switch.**

OK

3	Check STP signal and STI− voltage.

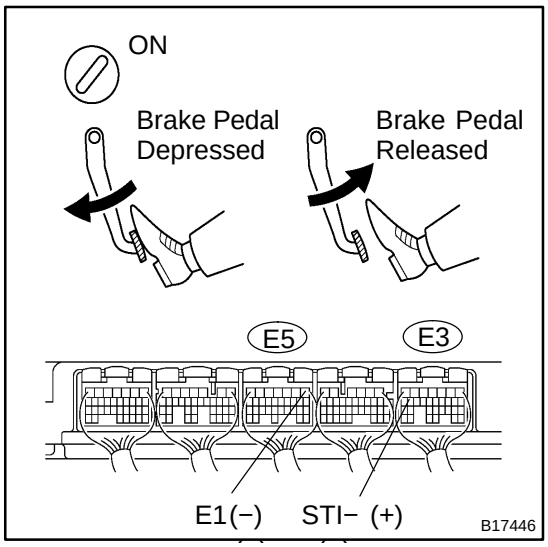

PREPARATION:

(a) Connect the hand−held tester to the DLC3.
(b) Turn the ignition switch to ON.
(c) Select the item ”DIAGNOSIS / ENHANCED OBD II / DATA LIST / ALL / STOP LIGHT SW”.

CHECK:

Read the signal displayed on the hand−held tester.

OK:

Standard:

Brake Pedal	Specified Condition
Depressed	STP Signal ON
Released	STP Signal OFF

CHECK:

Measure the voltage between the specified terminals of the E3 and E5 ECM connectors.

OK:

Standard:

Tester Connection	Brake Pedal	Specified Condition
STI− (E3−16) − E1 (E5−1)	Depressed	Below 1.5 V
STI− (E3−16) − E1 (E5−1)	Released	7.5 to 14 V

OK → **Check for intermittent problems (See page DI−11).**

NG

4	Check harness and connector between ECM and stop light switch.

Wire Harness Side:

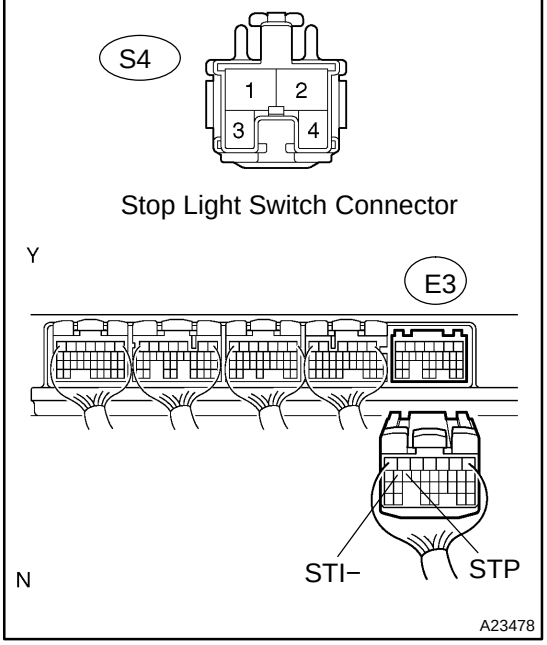

PREPARATION:

(a) Disconnect the S4 stop light switch connector.

(b) Disconnect the E3 ECM connector.

CHECK:

Measure the resistance between the wire harness side connectors.

OK:

Standard:

Tester Connection	Specified Condition
Stop light switch (S4−1) − STP (E3−15)	Below 1 Ω
Stop light switch (S4−4) − STI− (E3−16)	Below 1 Ω
Stop light switch (S4−1) or STP (E3−15) − Body ground	10 kΩ or higher
Stop light switch (S4−4) or STI− (E3−16) − Body ground	10 kΩ or higher

NG → **Repair or replace harness or connector.**

OK →

Replace ECM (See page SF−66).

DIDTU−01

DTC	P0505	Idle Air Control System

CIRCUIT DESCRIPTION

The idle speed is controlled by the ETCS (Electronic Throttle Control System).
The ETCS is composed of the throttle motor which operates the throttle valve, and the throttle position sensor, which detects the opening angle of the throttle valve.
The ECM controls the throttle motor to provide the proper throttle valve opening angle to obtain the target idle speed.

DTC No.	DTC Detection Condition	Trouble Area
P0505	Idle speed continues to vary greatly from target speed (2 trip detection logic)	• ETCS • Air induction system • PCV hose connection • ECM

MONITOR DESCRIPTION

The ECM regulates the idle speed by opening and closing the throttle valve using the ETCS. The ECM concludes that the idle speed control ECM function is malfunctioning if: 1) the actual idle RPM varies more than the specified amount, or 2) a learning value of the idle speed control remains at the maximum or minimum five times or more during a driving cycle. The ECM will turn on the MIL and set a DTC.
Example:
If the actual idle RPM varies from the target idle RPM by more than 100 (*1) rpm five times during a driving cycle, the ECM will turn on the MIL and a DTC is set.
HINT:
*1: RPM threshold varies with engine load.

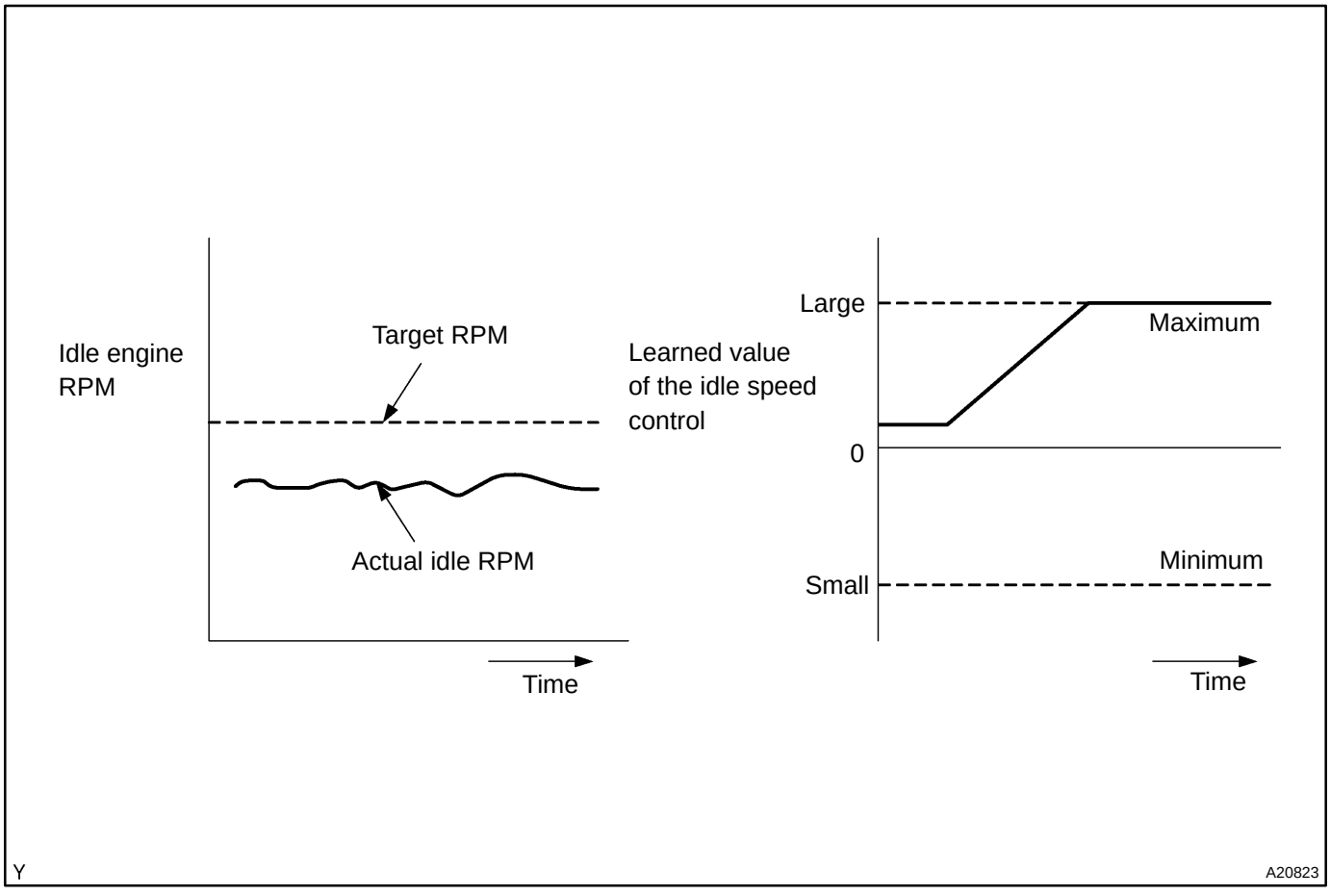

MONITOR STRATEGY

Related DTCs	P0505	Idle air control malfunction
Required sensors/components	Main sensors/components	Crankshaft position sensor
	Related sensors/components	Vehicle speed sensor, Engine coolant temperature sensor
Frequency of operation	Once per driving cycle	
Duration	10 min.	
MIL operation	2 driving cycles	
Sequence of operation	None	

TYPICAL ENABLING CONDITIONS

Item	Specification	
	Minimum	Maximum
The monitor will run whenever this DTC is not present	See page DI−18	
Engine	Running	

TYPICAL MALFUNCTION THRESHOLDS

Detection Criteria	Threshold
Either of the following conditions is met:	Condition 1 or 2
1. Frequency that both of the following conditions (a) and (b) are met:	5 times or more
(a) Engine RPM − target engine RPM	Less than −100 rpm or more than 150 rpm
(b) Vehicle condition	Stop after vehicle was driven by 6.25 mph (10 km/h) or more
2. Frequency that both of the following conditions (c) and (d) are met:	Once
(c) Engine RPM − target engine RPM	Less than −100 rpm or more than 150 rpm
(d) Intake air control flow rate learning value	1.3 L/sec. or less, or 8.5 L/sec. or more

INSPECTION PROCEDURE

HINT:

- When the throttle position is slightly opened (the accelerator pedal is slightly depressed) because a floor carpet is overlapped on the accelerator pedal, or if the accelerator pedal is not fully released, etc., DTC P0505 will possibly be detected.
- Read freeze frame data using the hand−held tester. Freeze frame data records the engine conditions when a malfunction is detected. When troubleshooting, freeze frame data can help determine if the vehicle was running or stopped, if the engine was warmed up or not, if the air−fuel ratio was lean or rich, as well as other data from the time when a malfunction occurred.

1	**Are there any other codes (besides P0505) being output?**

PREPARATION:

(a) Connect the hand−held tester to the DLC3.
(b) Turn the ignition switch to ON and push the hand−held tester main switch ON.
(c) When using hand−held tester, enter the following menu: DIAGNOSIS / ENHANCED OBD II / DTC INFO / CURRENT CODES.

CHECK:

Read the DTC using the hand−held tester.

RESULT:

Display (DTC Output)	Proceed to
P0505	A
”P0505” and other DTCs	B

HINT:

If any other codes besides P0505 are output, perform the troubleshooting for those DTCs first.

B → **Go to DTC chart (See page DI−57).**

A

2	**Check connection of PCV hose.**

NG → **Repair or replace PCV hose.**

OK

3	**Check air induction system (See page SF−1).**

CHECK:

Check for vacuum leaks in air induction system.

OK:

No leakage.

NG → **Repair or replace air induction system.**

OK

Check electric throttle control system (See page SF−39).

DTC	P050A	Cold Start Idle Air Control System Performance

DTC	P050B	Cold Start Ignition Timing Performance

DESCRIPTION

The Electronic Throttle Control System (ETCS) controls the engine idling speed. The ETCS operates the throttle actuator to open and close the throttle valve, and adjusts the intake air amount to achieve the target idling speed.

In addition, the ECM retards the ignition timing and the ETCS increases the intake air amount to quickly increase the catalyst temperature at cold start.

DTC No.	DTC Detection Conditions	Trouble Areas
P050A	Accumulated intake air amount during 10 seconds of idling after cold start, less than threshold (2 trip detection logic)	• Throttle body assembly • Mass air flow meter • Air induction system • PCV hose connections • ECM
P050B	Ignition timing retard value insufficient for 5 seconds or more during 10 seconds of P050A monitoring duration at cold start (2 trip detection logic)	• Throttle body assembly • Mass air flow meter • Air induction system • PCV hose connections • ECM

MONITOR DESCRIPTION

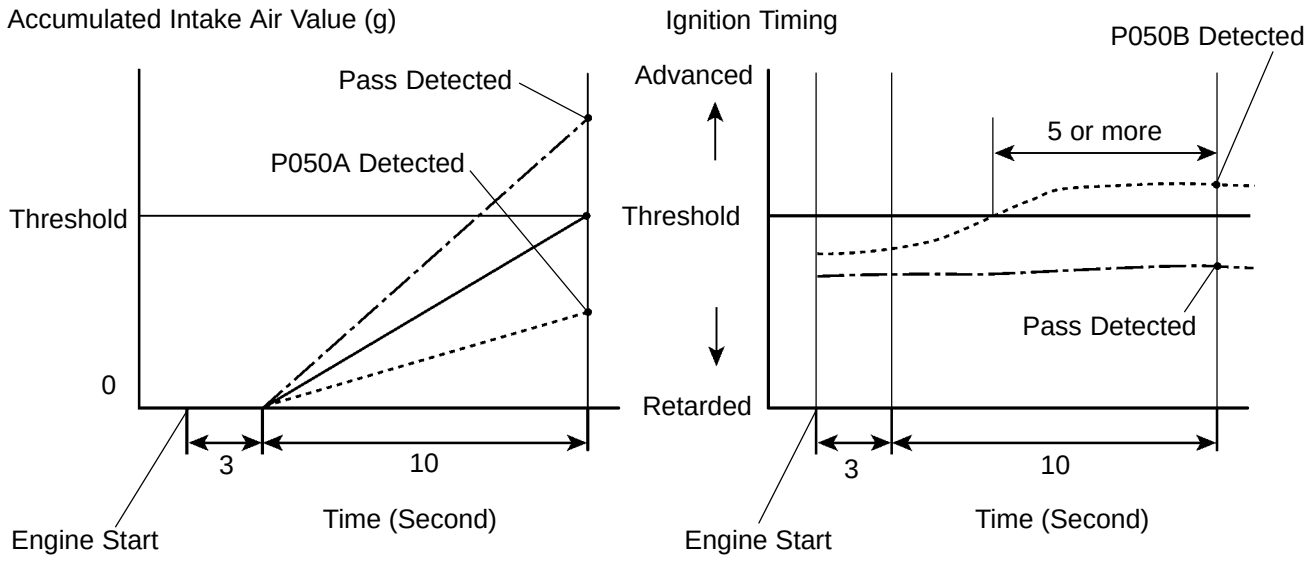

CMC0004

The ECM monitors the intake air amount during idling and the ignition timing.
When the engine coolant temperature is between −10°C and 50°C (14°F and 122°F), the ECM calculates the idling intake air amount for 10 seconds, beginning 3 seconds after the engine starts.
When the accumulated value is below the threshold, the ECM interprets this as a malfunction in the Idle Speed Control (ISC) system at cold start.
The ECM also monitors the ignition timing at cold start, and judges it to be incorrect when it is advanced to the same value for a warm engine for 5 seconds or more of the 10 second monitoring period.
Example:
P050A is detected when all conditions below are met (2 trip detection logic).
1. The engine coolant temperature is −10°C (14°F) or more when the engine starts.
2. The engine idles for 13 seconds after engine start.
3. The accumulated intake air amount is below the threshold.
If a malfunction is not repaired successfully, the ECM sets the DTC and illuminates the MIL 13 seconds after the engine is next started.

NOTICE:

When the negative battery terminal is disconnected during inspection or repairs, the ISC learning values are cleared. The ISC learning must be performed by warming up the engine and idling for 5 minutes with the engine coolant temperature at 75°C (167°F) or more because DTCs cannot be detected with the ISC learning values cleared.

MONITOR STRATEGY

Related DTCs	P050A	Idle speed control problem at cold
	P050B	Idle ignition timing problem at cold
Required Sensors/Components (Main)	Mass air flow meter	
Required Sensors/Components (Related)	Engine Coolant Temperature (ECT) sensor, Throttle position sensor, Vehicle speed sensor	
Frequency of Operation	Once per driving cycles	
Duration	10 seconds	
MIL Operation	2 driving cycles	
Sequence of Operation	None	

TYPICAL ENABLING CONDITIONS

Item	Specification	
	Minimum	Maximum
The monitor will run whenever these DTCs are not present	See page DI−18	
P050A:		
Battery voltage	8 V	−
Time after engine start	3 seconds	−
Starter	OFF	
ECT at engine start	−10°C (14°F)	−
ECT	−10°C (14°F)	50°C (122°F)
Engine idling time	3 seconds	−
Fuel−cut	OFF	
Vehicle speed	−	1.875 mph (3 km/h)
Time after shift position changed	1 second	−
P050B:		
Battery voltage	8 V	−
Time after engine start	3 seconds	−
Starter	OFF	
ECT at engine start	−10°C (14°F)	−
ECT	−10°C (14°F)	50°C (122°F)
Engine idling time	3 seconds	−
Fuel−cut	OFF	
Vehicle speed	−	1.875 mph (3 km/h)

TYPICAL MALFUNCTION THRESHOLDS

P050A:

Accumulated air flow amount (M/T)	Varies with ECT (Example: Less than 42.5 g)
Accumulated air flow amount (A/T)	Varies with ECT (Example: Less than 47.5 g, or less than 42.5 g)

P050B:

Accumulated time when ignition timing retard is cut off	5 seconds or more

INSPECTION PROCEDURE

HINT:

Read the freeze frame data using the intelligent tester. The freeze frame data records the engine condition when malfunctions are detected. When troubleshooting, the freeze frame data can help determine if the vehicle was moving or stationary, if the engine was warmed up or not, if the air−fuel ratio was lean or rich, and other data, from the time the malfunction occurred.

1	**Check any ohter DTCs output (In addition to DTC P050A and/or P050B).**

(a) Connect the intelligent tester to the DLC3.
(b) Turn the ignition switch ON.
(c) Turn the tester ON.
(d) Select the following the menu items: DIAGNOSIS / ENHANCED OBD II / DTC INFO / CURRENT CODES.
(e) Read the DTCs.

Result:

Display (DTC Output)	Proceed To
P050A and/or P050B	A
P050A and/or P050B and other DTCs	B

HINT:

If any DTCs other than P050A and P050B are output, troubleshoot those DTCs first.

B → **Go to DTC chart.**

A

2	**Read value using intelligent tester (Fuel trim).**

HINT:

Calculate the total fuel trim values to check the characteristic deviation of the mass air flow meter.

(a) Connect the intelligent tester to the DLC3.
(b) Turn the ignition switch ON.
(c) Turn the tester ON.
(d) Select the following menu items: DIAGNOSIS / ENHANCED OBD II / DATA LIST / PRIMARY / SHORT FT #1 and LONG FT #1.
(e) Read the values displayed on the tester.
(f) Add together the SHORT FT #1 and LONG FT #1 values to obtain the total FUEL TRIM.

OK:

Total of the SHORT FT #1 and LONG FT #1 values is between −20 % and 20 %.

OK → Go to step 8.

NG

3	Check PCV hose connections.

OK:

PCV hose is connected correctly and is not damaged.

NG → Go to step 5.

OK

4	Check air induction system.

(a) Check the air induction system for vacuum leakage.

OK:

No leakage from the air induction system.

OK → Go to step 6.

NG → Go to step 7.

5	Repair or replace PCV hose.

NEXT → Go to step 11.

6	Replace mass air flow meter.

NEXT → Go to step 11.

7	Repair or replace air induction system.

NEXT → Go to step 11.

8	**Check throttle valve.**

(a) Check for deposits around the throttle valve.

OK:

No deposits around the throttle valve.

OK	**Go to step 9.**
NG	**Go to step 10.**

9	**Replace ECM.**

NEXT	**Go to step 11.**

10	**Replace throttle body assembly.**

NEXT

11	**Check whether DTC output recurs (DTC P050A and/or P050B).**

NOTICE:

In this operation, the engine must be cold (the same level as the engine coolant temperature recorded in the freeze frame data).

(a) Connect the intelligent tester to the DLC3.
(b) Turn the ignition switch ON.
(c) Turn the tester ON.
(d) Clear DTCs (See page DI−42).
(e) Switch the ECM from normal mode to check mode using the tester (See page DI−43)
(f) Start the engine to idle for a minute.

OK:

Stable fast idling.

(g) Read DTCs.

OK:

No DTCs output.

NEXT

END

DIDTV−01

DTC	P0560	System Voltage

MONITOR DESCRIPTION

The battery supplies electricity to the ECM even when the ignition switch is OFF. This electricity allows the ECM to store data such as DTC history, freeze frame data, fuel trim values, and other data.
If the battery voltage falls below a minimum level, the ECM will conclude that there is a fault in the power supply circuit. The next time the engine starts, the ECM will turn on the MIL and a DTC will be set.

DTC No.	DTC Detecting Condition	Trouble Area
P0560	Open in back up power source circuit	• Open in back−up power source circuit • EFI No. 1 fuse • ECM

HINT:
If DTC P0560 present, the ECM will not store another DTC.

MONITOR STRATEGY

Related DTCs	P0560	System voltage malfunction
Required sensors/components	ECM	
Frequency of operation	Continuous	
Duration	3 sec.	
MIL operation	Immediate (*1)	
Sequence of operation	None	

*1: The DTC is set immediate. The MIL will be illuminated after the engine starts in the next time.

TYPICAL ENABLING CONDITIONS

Item	Specification	
	Minimum	Maximum
The monitor will run whenever this DTC is not present	See page DI−18	
Stand−by RAM	Initialized	

TYPICAL MALFUNCTION THRESHOLDS

Detection Criteria	Threshold
Battery voltage	Less than 3.5 V

WIRING DIAGRAM

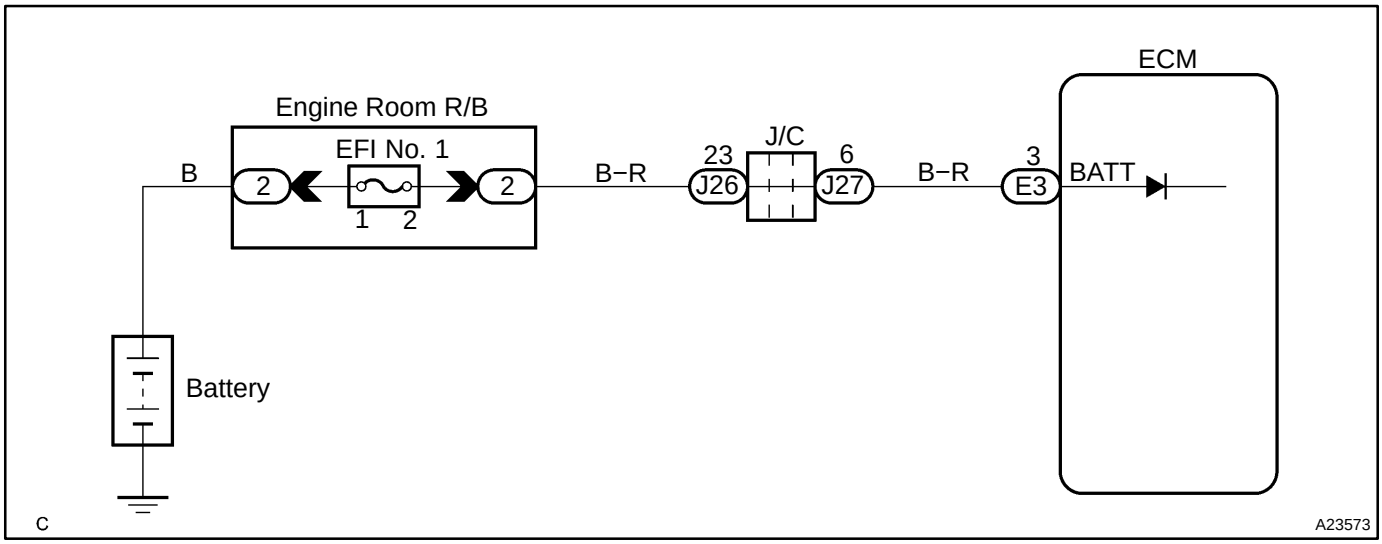

INSPECTION PROCEDURE

HINT:

Read freeze frame data using the hand−held tester. Freeze frame data records the engine conditions when a malfunction is detected. When troubleshooting, freeze frame data can help determine if the vehicle was running or stopped, if the engine was warmed up or not, if the air−fuel ratio was lean or rich, as well as other data from the time when a malfunction occurred.

1	**Check battery voltage.**

PREPARATION:

(a) Connect the hand−held tester to the DLC3.
(b) Turn the ignition switch to ON.
(c) Select the item: DIAGNOSIS / ENHANCED OBD II / DATA LIST / ALL / BATTERY VOLTAGE.

CHECK:

Read the battery voltage on the hand−held tester

RESULT:

Battery voltage	Proceed to
0 V	A
Except 0 V	B

B → **Go to step 5.**

A

2	Check EFI No. 1 fuse of engine room J/B.

Engine Room J/B:

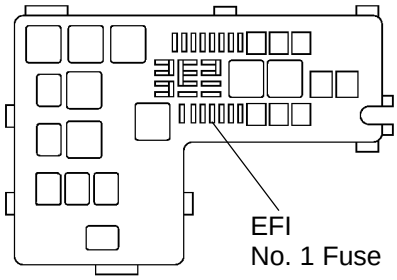

PREPARATION:

Remove the EFI No. 1 fuse from the engine room J/B.

CHECK:

Check the resistance of the EFI No. 1 fuse.

OK:

Standard: Below 1 Ω

NG → **Check for short in all harness and components connected to EFI No. 1 fuse and replace the fuse.**

OK

3	Check voltage between terminal BATT and E1 of ECM connector.

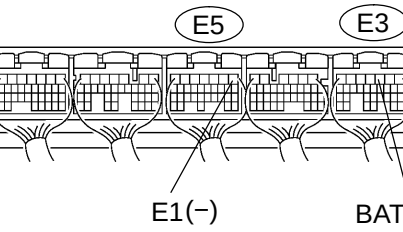

CHECK:

Measure the voltage between terminals of the E5 and E3 ECM connectors.

OK:

Standard:

Tester Connection	Specified Condition
BATT (E3−3) − E1 (E5−1)	9 to 14 V

OK → **Check for intermittent problems (See page DI−11).**

NG

4	Check for open and short in harness and connector between ECM and EFI No. 1 fuse, EFI No. 1 fuse and battery.

Engine Room J/B:

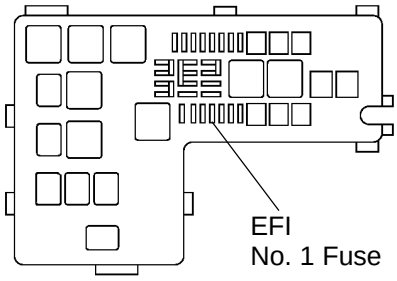

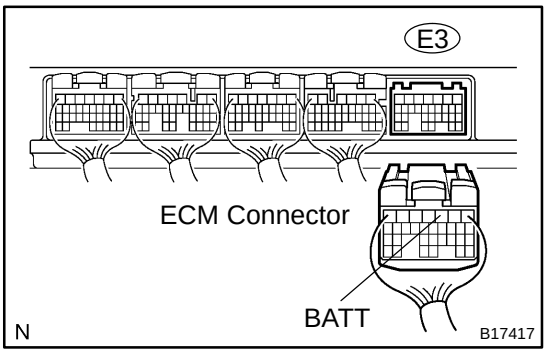

PREPARATION:

(a) Remove the EFI No. 1 fuse from the engine room J/B.

(b) Disconnect the E3 ECM connector.

CHECK:

Measure the resistance between the wire harness side connector.

OK:

Standard:

Tester Connection	Specified Condition
Engine Room J/B (EFI No. 1 fuse terminal 2) − BATT (E3−3)	Below 1 Ω
Engine Room J/B (EFI No. 1 fuse terminal 2) or BATT (E3−3) − Body ground	10 kΩ or higher

NG → **Repair or replace harness or connector.**

OK ↓

5	Check the battery (See page CH−1).

NG → **Replace battery.**

OK ↓

Check and replace engine room J/B.

DIDTX−01

DTC	P0617	Starter Relay Circuit High

MONITOR DESCRIPTION

While the engine is being cranked, the battery positive voltage is applied to terminal STA of the ECM. If the vehicle is being driven and the ECM detects the starter control signal (STA), the ECM concludes that the starter control circuit is malfunctioning. The ECM will turn on the MIL and a DTC is set.

DTC No.	DTC Detection Condition	Trouble Area
P0617	When all conditions (a), (b) and (c) are satisfied for 20 seconds with battery (+B) voltage 10.5 V or more (a) Vehicle speed ≧ 12.43 mph (20 km/h) (b) Engine revolution ≧ 1,000 rpm (c) STA signal ON	• Park/neutral position switch • Starter relay circuit • Ignition switch • ECM

MONITOR STRATEGY

Related DTCs	P0617	Starter signal error
Required sensors/components	Main sensors/components	Starter signal
	Related sensors/components	Vehicle speed sensor, Engine speed sensor
Frequency of operation	Continuous	
Duration	20 sec.	
MIL operation	Immediate	
Sequence of operation	None	

TYPICAL ENABLING CONDITIONS

Item	Specification	
	Minimum	Maximum
The monitor will run whenever this DTC is not present	See page DI−18	
Battery voltage	10.5 V	−
Vehicle speed	12.43 mph (20 km/h)	−
Engine RPM	1,000 rpm	−

TYPICAL MALFUNCTION THRESHOLDS

Detection Criteria	Threshold
Starter signal	ON (at ”more than 12.43 mph (20 km/h) and more than 1,000 rpm”)

WIRING DIAGRAM

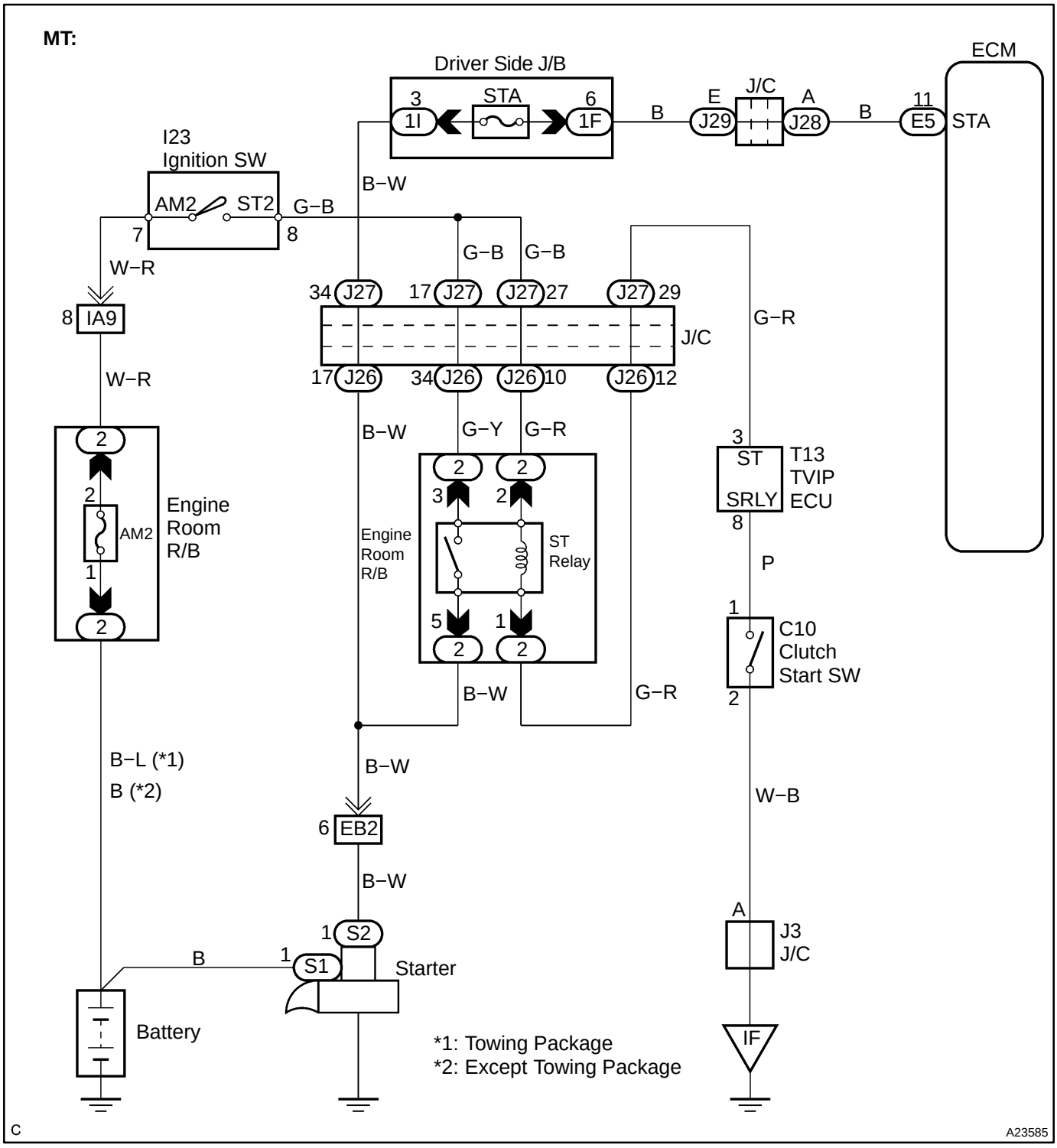

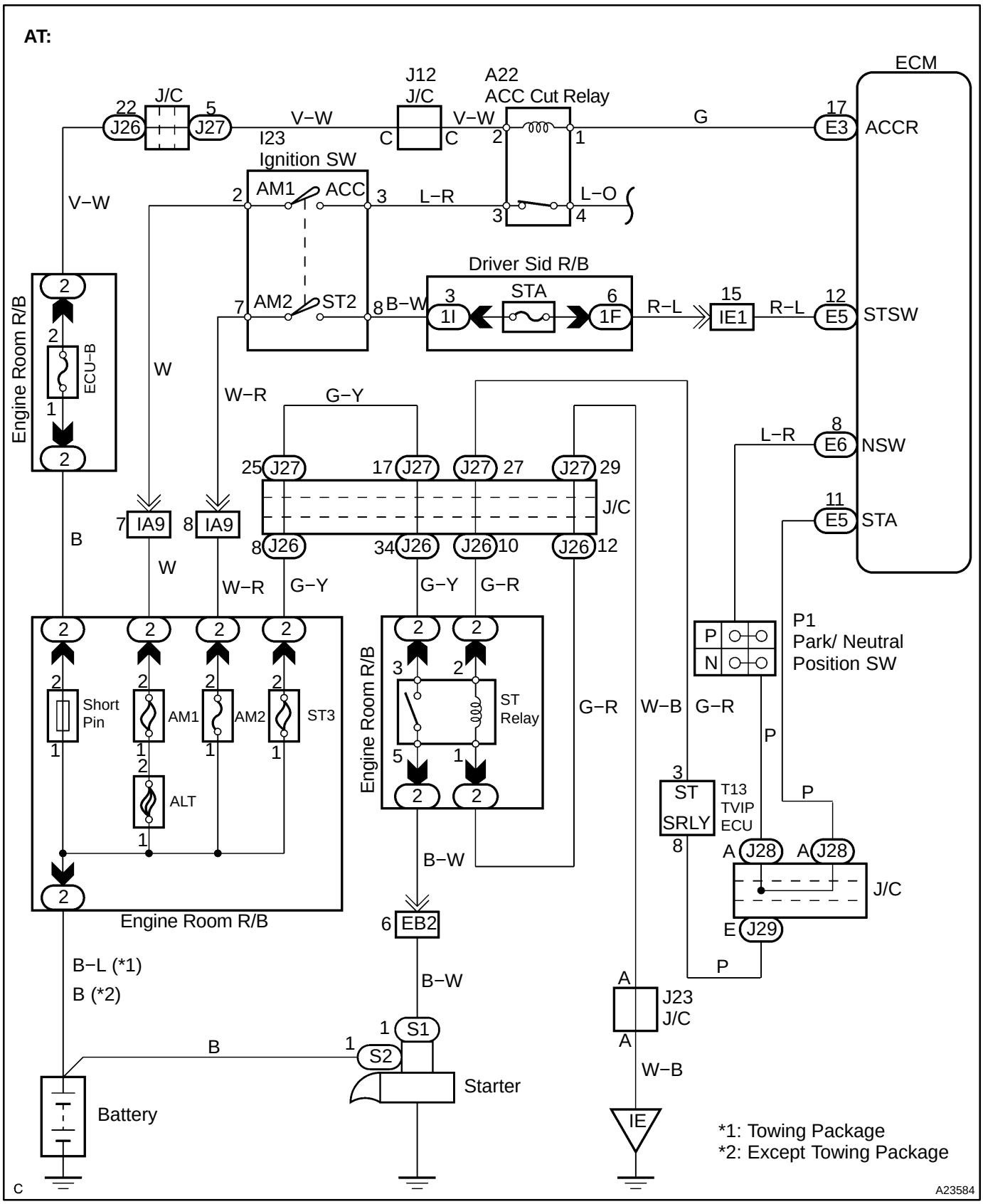
AT:
ECM
J/C
J12
J/C
A22
ACC Cut Relay
22
J26
5
J27
V−W
I23
C
C
V−W
2
1
G
17
E3
ACCR
Ignition SW
AM1
ACC
2
3
L−R
L−O
3
4
V−W
Driver Sid R/B
AM2
ST2
7
8
B−W
3
1I
STA
6
1F
R−L
15
IE1
R−L
12
E5
STSW
Engine Room R/B
2
2
ECU−B
1
2
W
W−R
G−Y
L−R
8
E6
NSW
25
J27
17
J27
J27
27
J27
29
J/C
11
E5
STA
7
IA9
8
IA9
8
J26
34
J26
J26
10
J26
12
B
W
W−R
G−Y
G−Y
G−R
P1
Park/ Neutral
Position SW
P
N
Short
Pin
AM1
AM2
ST3
ALT
Engine Room R/B
ST
Relay
G−R
W−B
G−R
P
3
ST
SRLY
T13
TVIP
ECU
8
P
A
J28
A
J28
J/C
E
J29
P
B−W
6
EB2
B−L (*1)
B (*2)
B−W
A
J23
J/C
A
1
S1
1
S2
B
Starter
W−B
Battery
IE
*1: Towing Package
*2: Except Towing Package
C
A23584

INSPECTION PROCEDURE

HINT:

Read freeze frame data using the hand−held tester. Freeze frame data records the engine conditions when a malfunction is detected. When troubleshooting, freeze frame data can help determine if the vehicle was running or stopped, if the engine was warmed up or not, if the air−fuel ratio was lean or rich, as well as other data from the time when a malfunction occurred.

1	**Connect hand−held tester, and check STA signal.**

PREPARATION:

(a) Connect the hand−held tester to the DLC3.
(b) Turn the ignition switch to ON, and push the hand−held tester main switch ON.
(c) When using hand−held tester, enter the following menu: DIAGNOSIS / ENHANCED OBD II / DATA LIST / ALL / STARTER SIG.

CHECK:

Read the STA signal on the hand−held tester while the starter operates.

OK:

Standard:

Ignition Switch Position	ON	START
STARTER SIG	OFF	ON

OK → **Go to step 5.**

NG

2	**Check park/neutral position switch (See page DI−993).**

NG → **Replace park/neutral position switch. Go to step 4 after the replacement.**

OK

3	**Check ignition switch (See page BE−37).**

NG → **Replace ignition switch. Go the step 5 after the replacement.**

OK

4	**Connect hand−held tester, and check STA signal.**

PREPARATION:

(a) Connect the hand−held tester to the DLC3.
(b) Turn the ignition switch to ON, and push the hand−held tester main switch ON.
(c) On the hand−held tester, enter the following menu: DIAGNOSIS / ENHANCED OBD II / DATA LIST / ALL / STARTER SIG.

CHECK:

Read the STA signal on the hand−held tester while the starter operates.

OK:

Standard:

Ignition Switch Position	ON	START
STARTER SIG	OFF	ON

NG → **Repair or replace harness or connector.**

OK →

5	**Check DTC reoccur**

PREPARATION:

(a) Connect the hand−held tester.
(b) Turn the ignition switch to ON and hand−held tester main switch ON.
(c) Clear DTC (See page DI−42).
(d) Drive the vehicle more than 25 mph (40 km/h) for 20 seconds or more.

CHECK:

Check DTC reoccur.

RESULT:

Display (DTC Output)	Proceed to
P0617	A
No DTC output	B

A → **Replace ECM (See page SF−66).**

B →

Check for intermittent problems (See page DI−11).

DIDTY−01

DTC	P0630	VIN not Programmed or Mismatch ECM/PCM

CIRCUIT DESCRIPTION

DTC P0630 is set when the Vehicle Identification Number (VIN) is not stored in the Engine Control Module (ECM) or the input VIN is not accurate. Input the VIN with the hand−held tester.

DTC No.	DTC Detecting Condition	Trouble Area
P0630	• VIN is not stored in ECM. • Input VIN in ECM is not accurate.	ECM

MONITOR STRATEGY

Related DTCs	P0630	VIN not programmed
Required sensors/components	Main sensors/components	ECM
	Related sensors/components	−
Frequency of operation	Continuous	
Duration	0.5 sec.	
MIL operation	Immediate	
Sequence of operation	None	

TYPICAL ENABLING CONDITIONS

Item	Specification	
	Minimum	Maximum
The monitor will run whenever this DTC is not present	See page DI−18	
Battery voltage	8 V	−
Ignition switch	ON	
Starter	OFF	

TYPICAL MALFUNCTION THRESHOLDS

Detection Criteria	Threshold
VIN code	Not programmed

COMPONENT OPERATING RANGE

Parameter	Standard Value
VIN code	Programmed

INSPECTION PROCEDURE

1	**Read current DTC.**

NOTICE:
If P0630 is present, the VIN must be input to the ECM using the hand−held tester. However, all DTCs are cleared automatically by the tester when inputting the VIN. If DTCs other than P0630 are present, check them first.

NEXT

2	**Input VIN with hand−held tester (See page DI−14).**

NEXT

END

DIDT8−01

DTC	P0100	Mass or Volume Air Flow Circuit

DTC	P0102	Mass or Volume Air Flow Circuit Low Input

DTC	P0103	Mass or Volume Air Flow Circuit High Input

CIRCUIT DESCRIPTION

The Mass Air Flow (MAF) meter measures the amount of air flowing through the throttle valve. The ECM uses this information to determine the fuel injection time and provide a proper air fuel ratio. Inside the MAF meter, there is a heated platinum wire exposed to the flow of intake air.

By applying a specific current to the wire, the ECM heats this wire to a given temperature. The flow of incoming air cools the wire and an internal thermistor, affecting their resistance. To maintain a constant current value, the ECM varies the voltage applied to these components in the MAF meter. The voltage level is proportional to the airflow through the sensor. The ECM interprets this voltage as the intake air amount.

The circuit is constructed so that the platinum hot wire and temperature sensor provide a bridge circuit, with the power transistor controlled so that the potential of A and B remains equal to maintain the set temperature.

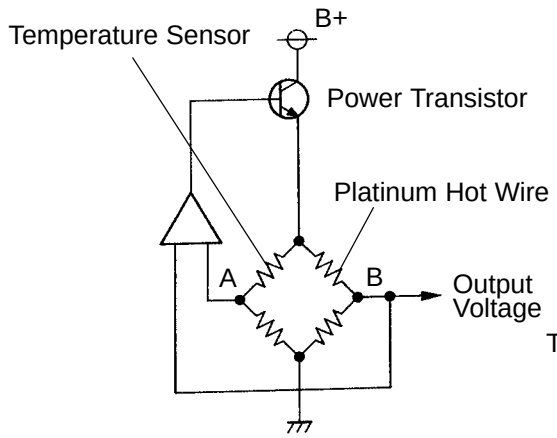

FI6929
A09074

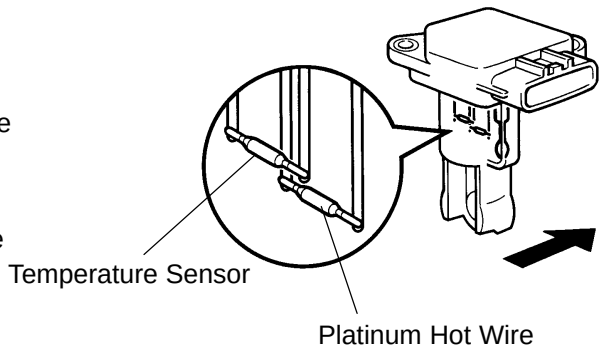

N

A09707

DTC No.	DTC Detection Condition	Trouble Area
P0100	Open or short in mass air flow meter circuit for more than 3 sec.	• Open or short in mass air flow meter circuit • Mass air flow meter • ECM
P0102	Short in mass air flow meter circuit for more than 3 sec.	
P0103	Short in mass air flow meter circuit for more than 3 sec. (+B circuit)	

HINT:
After confirming DTC P0100, P0102 or P0103, use the hand−held tester to confirm the MAF ratio from the ALL menu (to reach the ALL menu: DIAGNOSIS / ENHANCED OBD II / DATA LIST / ALL).

Mass Air Flow Value (gm/sec.)	Malfunction
Approx. 0.0	• Mass air flow meter power source circuit open • VG circuit open or short
271.0 or more	• EVG circuit open

MONITOR DESCRIPTION

If there is a defect in the MAF (Mass Air Flow) meter or an open or short circuit, the voltage level will deviate outside the normal operating range. The ECM interprets this deviation as a defect in the MAF meter and sets a DTC.
Example:
When the MAF meter voltage output is less than 0.2 V, or more than 4.9 V, and if either the condition continues for more than 3 sec.

MONITOR STRATEGY

Related DTCs	P0100	Mass air flow meter circuit range check (Fluttering)
	P0102	Mass air flow meter circuit range check (Low voltage)
	P0103	Mass air flow meter circuit range check (High voltage)
Required sensors/components	Mass air flow meter	
Frequency of operation	Continuous	
Duration	3 sec.	
MIL operation	Immediate (When engine speed is at less than 4,000 rpm) 2 driving cycles (When engine speed is at 4,000 rpm or more)	
Sequence of operation	None	

TYPICAL ENABLING CONDITIONS

The monitor will run whenever these DTCs are not present	See page DI−18
The typical enabling condition is not available	−

TYPICAL MALFUNCTION THRESHOLDS

Detection Criteria	Threshold
P0100:	
Mass air flow meter voltage	Less than 0.2 V, or more than 4.9 V
P0102:	
Mass air flow meter voltage	Less than 0.2 V
P0103:	
Mass air flow meter voltage	More than 4.9 V

COMPONENT OPERATING RANGE

Parameter	Standard Value
Mass air flow meter voltage	0.4 to 2.2 V

WIRING DIAGRAM

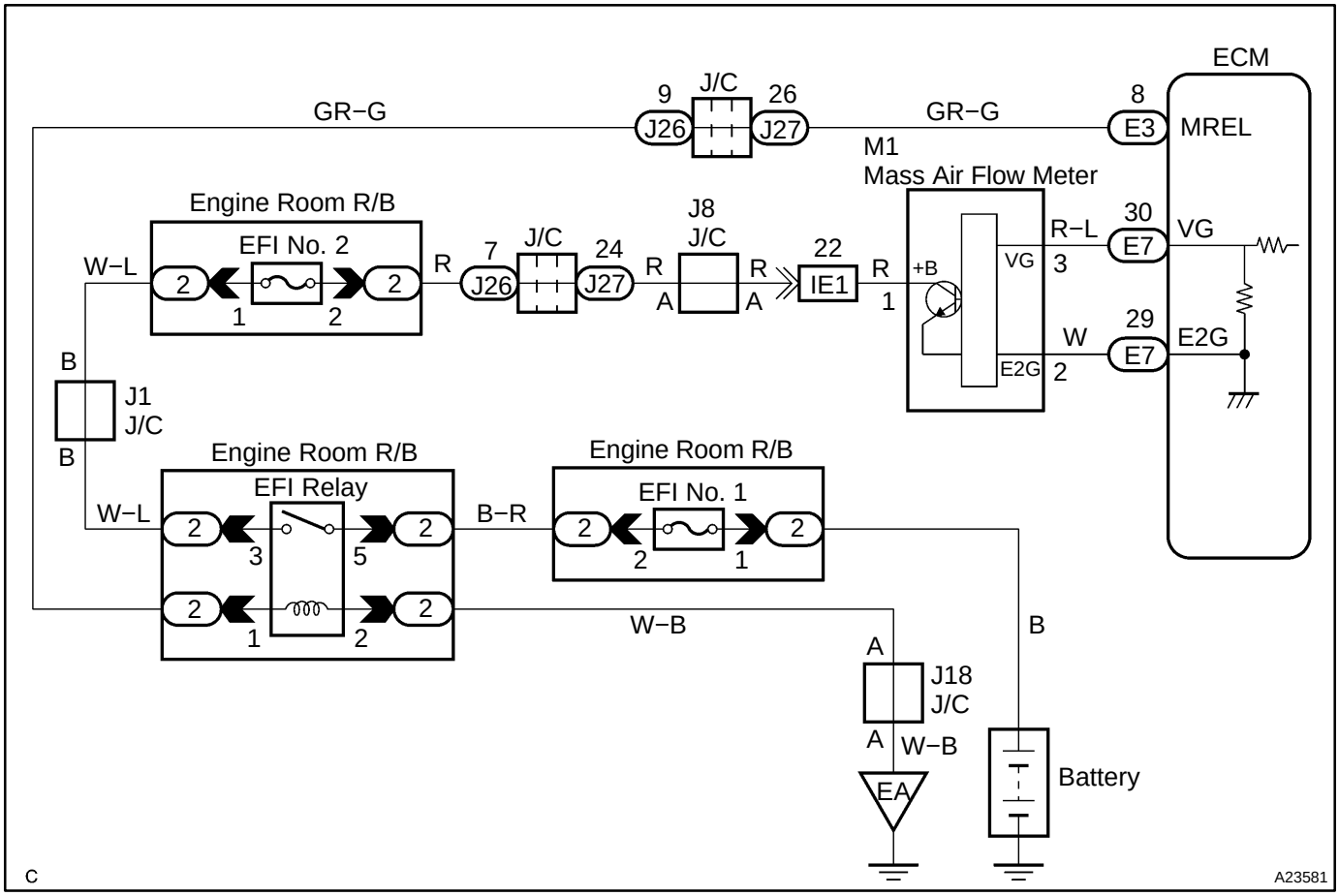

INSPECTION PROCEDURE

HINT:

Read freeze frame data using the hand−held tester. Freeze frame data records the engine conditions when a malfunction is detected. When troubleshooting, freeze frame data can help determine if the vehicle was running or stopped, if the engine was warmed up or not, if the air−fuel ratio was lean or rich, as well as other data from the time when a malfunction occurred.

1	**Connect hand−held tester, and read value of mass air flow rate.**

PREPARATION:

(a) Connect the hand−held tester to the DLC3.
(b) Turn the ignition switch to ON and push the hand−held tester main switch ON.
(c) Start the engine.
(d) When using hand−held tester, enter the following menu: DIAGNOSIS / ENHANCED OBD II / DATA LIST / ALL / MAF.

CHECK:

Read the mass air flow rate on the hand−held tester.

RESULT:

Air Flow Rate (g/s)	Proceed to
0.0	A
271.0 or more	B
Between 1 and 270.0 (*1)	C

*1: The value must change when the throttle valve is opened or closed.

B	**Go to step 6.**
C	**Check for intermittent problems (See page DI−11).**

A

2	Check voltage of mass air flow meter power source.

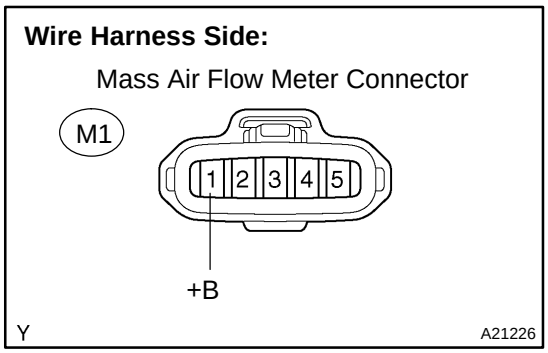

PREPARATION:

(a) Disconnect the M1 mass air flow meter connector.

(b) Turn the ignition switch to ON.

CHECK:

Measure voltage between terminal 1 of the mass air flow meter connector and body ground.

OK:

Standard:

Tester Connection	Specified Condition
+B (M1−1) − Body ground	9 to 14 V

NG → **Go to step 5.**

OK

3	Check voltage between terminal VG of ECM connector and body ground.

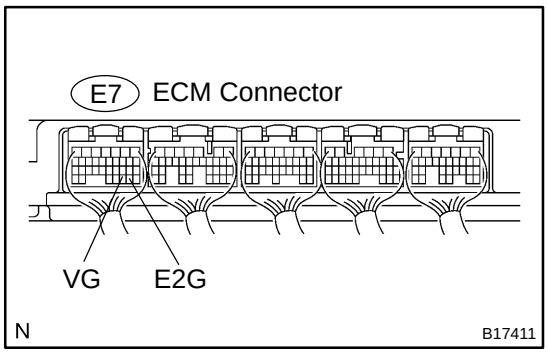

PREPARATION:

Start the engine.

CHECK:

Measure the voltage between the specified terminal of the E7 ECM connector.

HINT:

The shift position should be P or N and the A/C switch should be turned OFF.

OK:

Standard:

Tester Connection	Condition	Specified Condition
VG (E7−30) − E2G (E7−29)	Engine is idling	0.5 to 3.0 V

NG → **Replace ECM (See page SF−66).**

NG

4	**Check for open and short in harness and connector between mass air flow meter and ECM.**

Wire Harness Side:

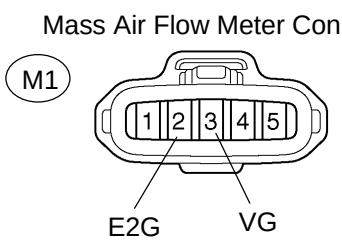

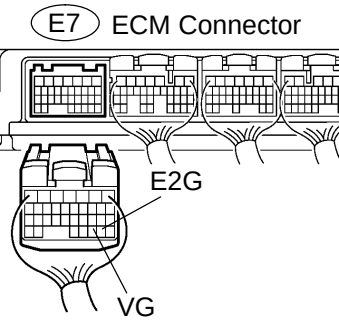

PREPARATION:

(a) Disconnect the M1 mass air flow meter connector.

(b) Disconnect the E7 ECM connector.

CHECK:

Check the resistance between the wire harness side connectors.

OK:

Standard:

Tester Connection	Specified Condition
VG (M1−3) − VG (E7−30)	Below 1 Ω
E2G (M1−2) − E2G (E7−29)	Below 1 Ω
VG (M1−3) or VG (E7−30) − Body ground	10 kΩ or higher

NG → **Repair or replace harness or connector.**

OK

Replace mass air flow meter.

5	**Check for open and short in harness and connector between mass air flow meter and EFI relay.**

Engine Room J/B:

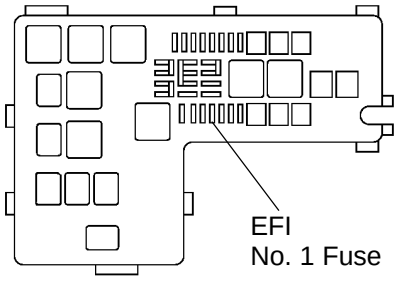

PREPARATION:

Remove the EFI No. 1 fuse from the engine room J/B.

CHECK:

Check for resistance in the EFI No. 1 fuse.

OK:

Standard:

Below 1 Ω

Wire Harness Side:

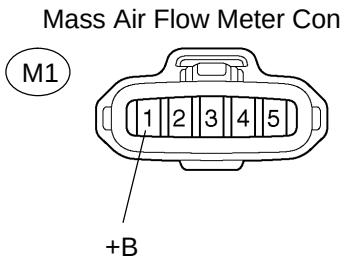

PREPARATION:

(a) Install the EFI No. 1 fuse.

(b) Disconnect the M1 mass air flow meter connector.

(c) Remove the EFI relay from the engine room J/B.

CHECK:

Check the resistance between the wire harness side connectors.

OK:

Standard:

Tester Connection	Specified Condition
+B (M1−1) − Engine Room J/B (EFI relay terminal 1)	Below 1 Ω
+B (M1−1) or Engine room J/B (EFI relay terminal 1) − Body ground	10 kΩ or higher

Engine Room R/B:

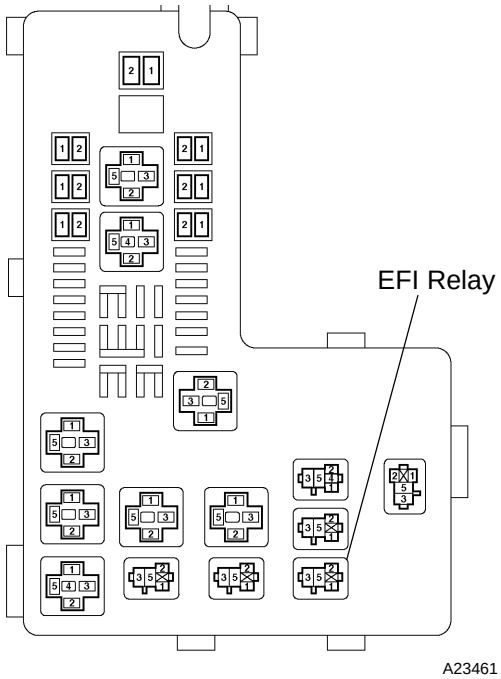

NG → **Repair or replace harness or connector.**

OK →

Check ECM power source circuit (See page DI−409).

6	Check continuity between terminal E2G of ECM connector and body ground.

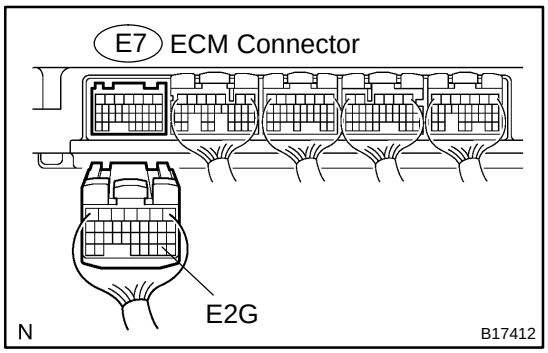

CHECK:

Check the resistance between terminal of the E7 ECM connector and body ground.

OK:

Standard:

Tester Connection	Specified Condition
E2G (E7−29) − Body ground	Below 1 Ω

NG → **Replace ECM (See page SF−66).**

OK

7	Check for open in harness and connector between mass air flow meter and ECM.

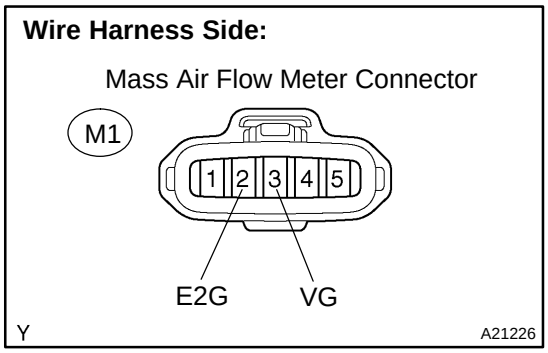

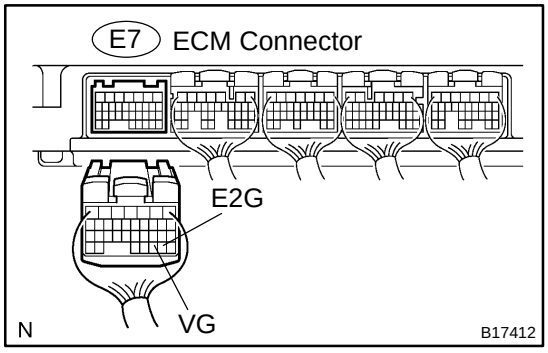

PREPARATION:

(a) Disconnect the M1 mass air flow meter connector.

(b) Disconnect the E7 ECM connector.

CHECK:

Check the resistance between the wire harness side connectors.

OK:

Standard:

Tester Connection	Specified Condition
VG (M1−3) − VG (E7−30)	Below 1 Ω
E2G (M1−2) − E2G (E7−29)	Below 1 Ω
VG (M1−3) or VG (E7−30) − Body ground	10 kΩ or higher
E2G (M1−2) or E2G (E7−29) − Body ground	10 kΩ or higher

NG → **Repair or replace harness or connector.**

OK

Replace mass air flow meter.

DIDTA−01

DTC	P0110	Intake Air Temperature Circuit

DTC	P0112	Intake Air Temperature Circuit Low Input

DTC	P0113	Intake Air Temperature Circuit High Input

CIRCUIT DESCRIPTION

(Fig.1)

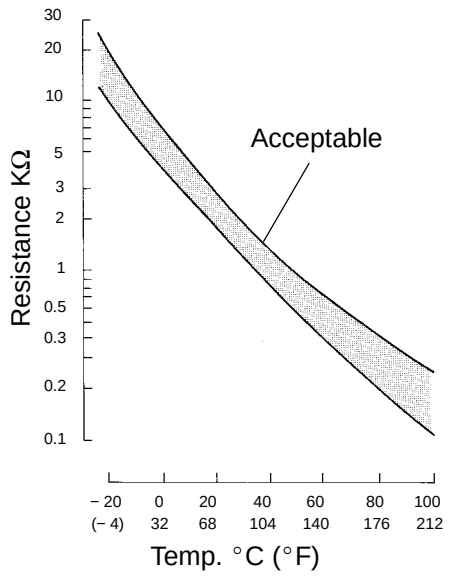

The intake air temperature (IAT) sensor, mounted on the mass air flow (MAF) meter, monitors the intake air temperature. The IAT sensor has a thermistor that varies its resistance depending on the temperature of the intake air. When the air temperature is low, the resistance in the thermistor increases. When the temperature is high, the resistance drops. The resistance varies as voltage changes to the ECM terminal.
(See Fig. 1).
The intake air temperature sensor is connected to the ECM (See below). The 5 V power source voltage in the ECM is applied to the intake air temperature sensor from terminal THA (THAR) via resistor R.
That is, the resistor R and the intake air temperature sensor are connected in series. When the resistance value of the intake air temperature sensor changes in accordance with changes in the intake air temperature, the voltage at terminal THA (THAR) also changes. Based on this signal, the ECM increases the fuel injection volume to improve the driveability during cold engine operation.

DTC No.	Proceed to	DTC Detection Condition	Trouble Area
P0110	Step 1	Open or short in intake air temperature sensor circuit for 0.5 sec.	• Open or short in intake air temperature sensor circuit • Intake air temperature sensor (built in mass air flow meter) • ECM
P0112	Step 4	Short in intake air temperature sensor circuit for 0.5 sec.	
P0113	Step 2	Open in intake air temperature sensor circuit for 0.5 sec.	

HINT:
After confirming DTC ”P0110, P0112 or P0113”, use the hand−held tester to confirm the intake air temperature in the ”DIAGNOSIS / ENHANCED OBD II / DATA LIST / ALL”.

Temperature Displayed	Malfunction
−40˚C (−40˚F)	Open circuit
140˚C (284˚F) or more	Short circuit

MONITOR DESCRIPTION

The ECM monitors the sensor voltage and uses this value to calculate the intake air temperature. When the sensor output voltage deviates from the normal operating range, the ECM interprets this as a fault in the IAT (Intake Air Temperature) sensor and sets a DTC.
Example:
When the sensor voltage output is equal to −40°C (−40°F), or more than 140°C (284°F).

MONITOR STRATEGY

Related DTCs	P0110	Intake air temperature sensor range check (Fluttering)
	P0112	Intake air temperature sensor range check (Low voltage)
	P0113	Intake air temperature sensor range check (High voltage)
Required sensors/components	Intake air temperature sensor	
Frequency of operation	Continuous	
Duration	0.5 sec.	
MIL operation	Immediate	
Sequence of operation	None	

TYPICAL ENABLING CONDITIONS

The monitor will run whenever these DTCs are not present	See page DI−18
The typical enabling condition is not available	−

TYPICAL MALFUNCTION THRESHOLDS

Detection Criteria	Threshold
P0110:	
Intake air temperature sensor voltage (Intake air temperature)	Less than 0.18 V or more than 4.91 V (More than 140°C (284°F), or less than −40°C (−40°F))
P0112:	
Intake air temperature sensor voltage (Intake air temperature)	Less than 0.18 V (More than 140°C (284°F))
P0113:	
Intake air temperature sensor voltage (Intake air temperature)	More than 4.91 V (Less than −40°C (−40°F))

COMPONENT OPERATING RANGE

Parameter	Standard Value
Intake air temperature sensor voltage	0.18 V (140°C (284°F)) to 4.91 V (−40°C (−40°F))

WIRING DIAGRAM

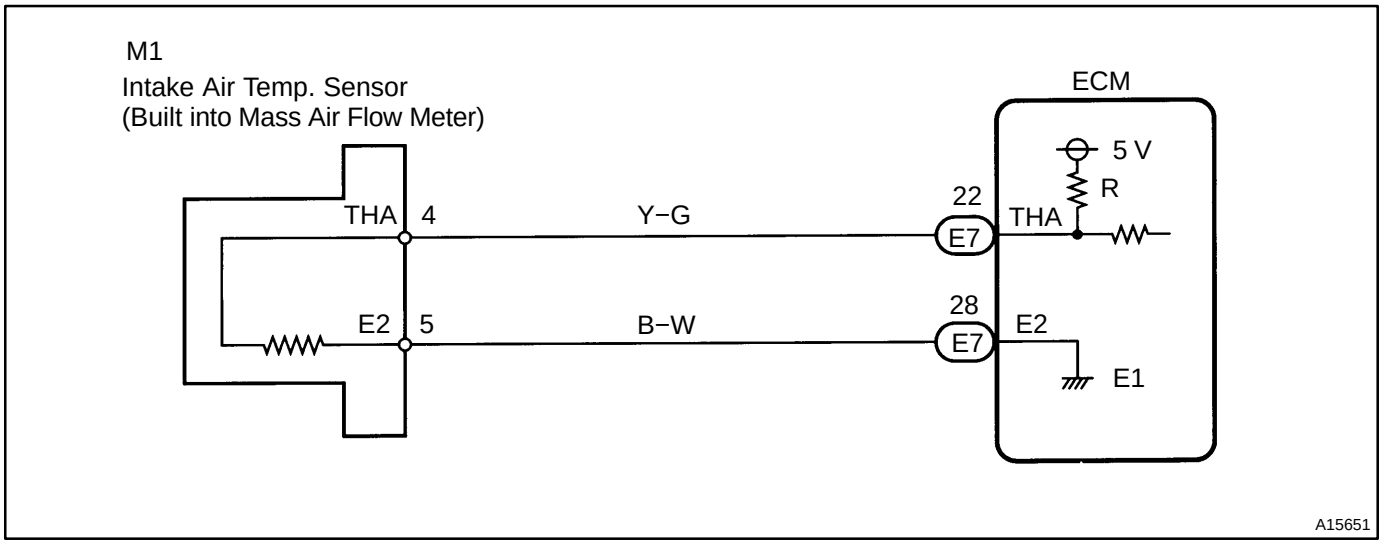

INSPECTION PROCEDURE

HINT:

- If DTCs related to different systems that have terminal E2 as the ground terminal are output simultaneously, terminal E2 may have an open circuit.
- Read freeze frame data using the hand−held tester. Freeze frame data records the engine conditions when a malfunction is detected. When troubleshooting, freeze frame data can help determine if the vehicle was running or stopped, if the engine was warmed up or not, if the air−fuel ratio was lean or rich, as well as other data from the time when a malfunction occurred.

1	**Connect hand−held tester, and read value of intake air temperature.**

PREPARATION:

(a) Connect the hand−held tester to the DLC3.
(b) Turn the ignition switch to ON and push the hand−held tester main switch ON.
(c) When using hand−held tester, enter the following menu: DIAGNOSIS / ENHANCED OBD II / DATA LIST / ALL / INTAKE AIR.

CHECK:

Read the temperature value on the hand−held tester.

OK:

Same as actual intake air temperature.

RESULT:

Displayed Temperature	Proceed to
−40°C (−40°F)	A
140°C (284°F) or more	B
OK (Same as present temperature)	C

HINT:

- If there is an open circuit, the hand−held tester indicates −40°C (−40°F).
- If there is a short circuit, the hand−held tester indicates 140°C (284°F) or more.

B	**Go to step 4.**
C	**Check for intermittent problems (See page DI−11).**

A

2	Check for open in harness or ECM.

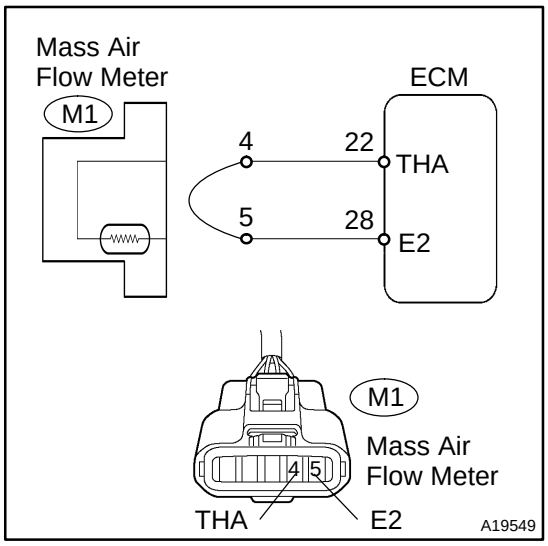

PREPARATION:

(a) Disconnect the M1 mass air flow meter connector.
(b) Connect terminals 4 and 5 of the mass air flow meter wire harness side connector.
(c) Turn the ignition switch to ON.
(d) When using hand−held tester, enter the following menu: DIAGNOSIS / ENHANCED OBD II / DATA LIST / ALL / INTAKE AIR.

CHECK:

Read the temperature value on the hand−held tester.

OK:

Standard: 140°C (284°F)

OK	Confirm good connection at sensor. If OK, replace mass air flow meter.

NG

3	Check for open in harness or ECM.

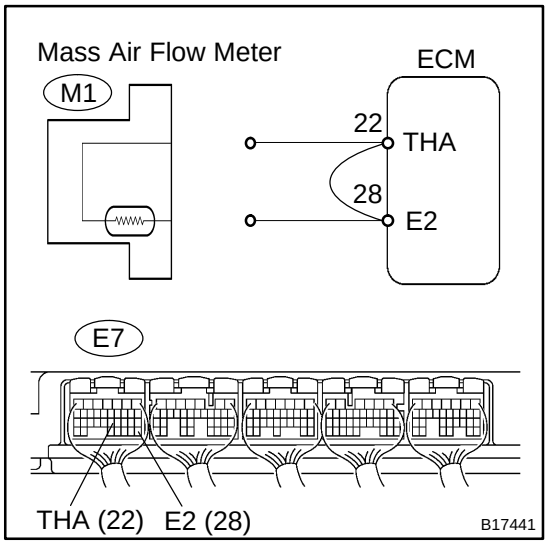

PREPARATION:

(a) Connect terminals THA and E2 of the E7 ECM connector.

HINT:

Before checking, do a visual and contact pressure check for the ECM connector.

(b) Turn the ignition switch to ON.
(c) When using hand−held tester, enter the following menu: DIAGNOSIS / ENHANCED OBD II / DATA LIST / ALL / INTAKE AIR.

CHECK:

Read the temperature value on the hand−held tester.

OK:

Standard: 140°C (284°F) or more

OK	Repair or replace harness or connector.

NG

Confirm good connection at ECM. If OK, replace ECM (See page SF−66).

4	Check for short in harness and ECM.

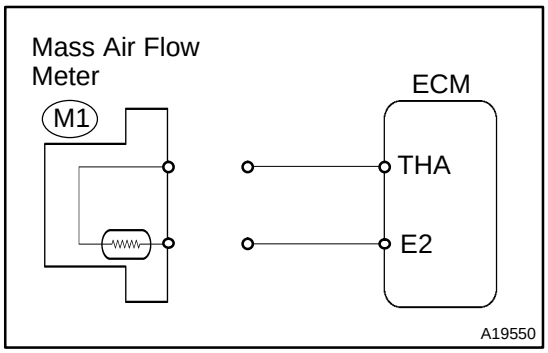

PREPARATION:

(a) Disconnect the M1 mass air flow meter connector.
(b) Turn the ignition switch to ON.
(c) When using hand−held tester, enter the following menu: DIAGNOSIS / ENHANCED OBD II / DATA LIST / ALL / INTAKE AIR.

CHECK:

Read the temperature value on the hand−held tester.

OK:

Standard: −40°C (−40°F)

OK	Replace mass air flow meter.

NG

5	Check for short in harness or ECM.

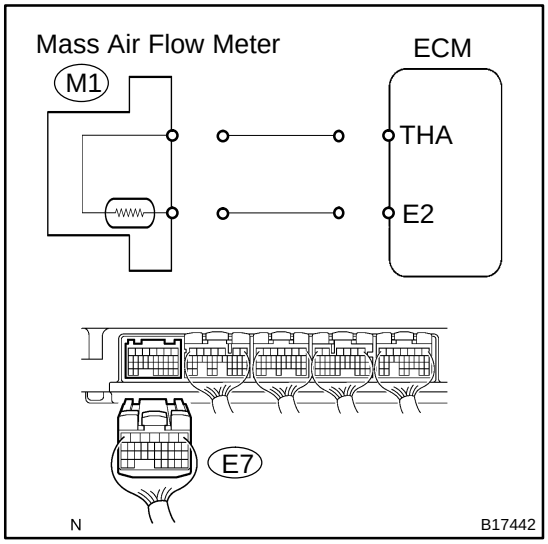

PREPARATION:

(a) Disconnect the E7 ECM connector.
(b) Turn the ignition switch to ON.
(c) When using hand−held tester, enter the following menu: DIAGNOSIS / ENHANCED OBD II / DATA LIST / ALL / INTAKE AIR.

CHECK:

Read the temperature value on the hand−held tester.

OK:

Standard: −40°C (−40°F)

OK	Repair or replace harness or connector.

NG

Replace ECM (See page SF−66).

DIDTB−01

DTC	P0115	Engine Coolant Temperature Circuit

DTC	P0117	Engine Coolant Temperature Circuit Low Input

DTC	P0118	Engine Coolant Temperature Circuit High Input

CIRCUIT DESCRIPTION

A thermistor is built in the Engine Coolant Temperature (ECT) sensor and changes the resistance value according to the engine coolant temperature.
The structure of the sensor and connection to the ECM is the same as the Intake Air Temperature (IAT) sensor.
HINT:
If the ECM detects the DTC ”P0115, P0117 or P0118”, it operates the fail−safe function in which the ECT is assumed to be 80°C (176°F).

DTC No.	Proceed to	DTC Detection Condition	Trouble Area
P0115	Step 1	Open or short in engine coolant temperature sensor circuit for 0.5 sec.	• Open or short in engine coolant temperature sensor circuit • Engine coolant temperature sensor • ECM
P0117	Step 4	Short in engine coolant temperature sensor circuit for 0.5 sec.	
P0118	Step 2	Open in engine coolant temperature sensor circuit for 0.5 sec.	

HINT:
After confirming DTC ”P0115, P0117 or P0118”, use the OBD II scan tool or the hand−held tester to confirm the engine coolant temperature from the DIAGNOSIS / ENHANCED OBD II / DATA LIST / ALL.

Displayed Temperature	Malfunction
−40˚C (−40˚F)	Open circuit
140˚C (284˚F) or more	Short circuit

MONITOR DESCRIPTION

The ECT (Engine Coolant Temperature) sensor is used to monitor the engine coolant temperature. The ECT sensor has a thermistor that varies its resistance depending on the temperature of the engine coolant. When the coolant temperature is low, the resistance in the thermistor increases. When the temperature is high, the resistance drops. The resistance varies as output voltage from the sensor changes.
The ECM monitors the sensor voltage and uses this value to calculate the engine coolant temperature. When the sensor output voltage deviates from the normal operating range, the ECM interprets this as a fault in the ECT sensor and sets a DTC.

Example:
When the ECM calculates that the ECT is less than −40°C (−40°F), or more than 140°C (284°F), and if either the condition continues for 0.5 sec. or more, the ECM will set a DTC.

MONITOR STRATEGY

Related DTCs	P0115	Engine coolant temperature sensor range check (Fluttering)
	P0117	Engine coolant temperature sensor range check (Low voltage)
	P0118	Engine coolant temperature sensor range check (High voltage)
Required sensors/components	Engine coolant temperature sensor	
Frequency of operation	Continuous	
Duration	0.5 sec.	
MIL operation	Immediate	
Sequence of operation	None	

TYPICAL ENABLING CONDITIONS

The monitor will run whenever these DTCs are not present	See page DI−18
The typical enabling condition is not available	−

TYPICAL MALFUNCTION THRESHOLDS

Detection Criteria	Threshold
P0115:	
Engine coolant temperature sensor voltage (Coolant temperature)	Less than 0.14 V or more than 4.91 V (More than 140°C (284°F), or less than −40°C (−40°F))
P0117:	
Engine coolant temperature sensor voltage (Coolant temperature)	Less than 0.14 V (More than 140°C (284°F))
P0118:	
Engine coolant temperature sensor voltage (Coolant temperature)	More than 4.91 V (Less than −40°C (−40°F))

COMPONENT OPERATING RANGE

Parameter	Standard Value
Engine coolant temperature sensor voltage	0.14 V (140°C (284°F)) to 4.91 V (−40°C (−40°F))

WIRING DIAGRAM

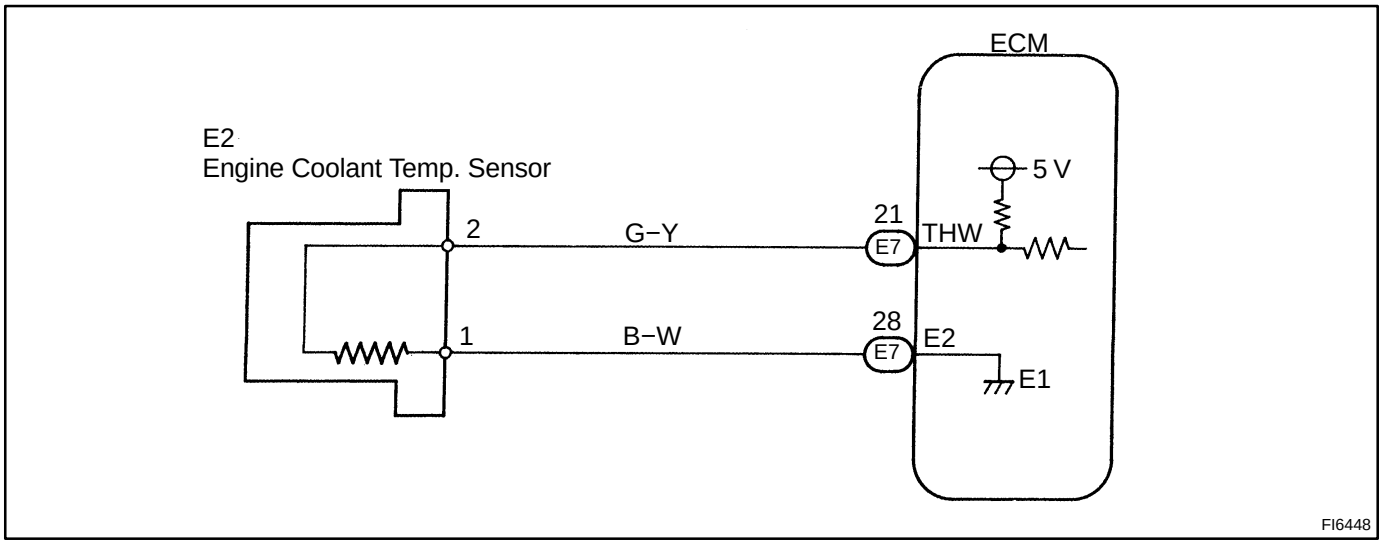

INSPECTION PROCEDURE

HINT:

- If DTCs related to different system that have terminal E2 as the ground terminal are output simultaneously, terminal E2 may have an open circuit.
- Read freeze frame data using the hand−held tester. Freeze frame data records the engine conditions when a malfunction is detected. When troubleshooting, freeze frame data can help determine if the vehicle was running or stopped, if the engine was warmed up or not, if the air−fuel ratio was lean or rich, as well as other data from the time when a malfunction occurred.

1	**Connect hand−held tester, and read value of engine coolant temperature.**

PREPARATION:

(a) Connect the hand−held tester to the DLC3.
(b) Turn the ignition switch to ON and push the hand−held tester main switch ON.
(c) When using hand−held tester, enter the following menu: DIAGNOSIS / ENHANCED OBD II / DATA LIST / ALL / COOLANT TEMP.

CHECK:

Read the temperature value on the the hand−held tester.

OK:

Same value as actual engine coolant temperature.

RESULT:

Displayed Temperature	Proceed to
−40°C (−40°F)	A
140°C (284°F) or more	B
OK (Same as present temperature)	C

HINT:

- If there is an open circuit, hand−held tester indicates −40°C (−40°F).
- If there is a short circuit, hand−held tester indicates 140°C (284°F) or more.

B	**Go to step 4.**
C	**Check for intermittent problems (See page DI−11).**

A

2	Check for open in harness or ECM.

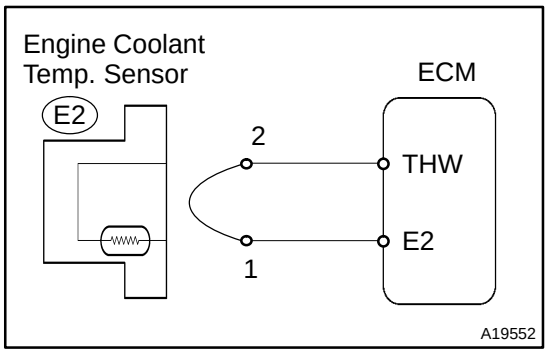

PREPARATION:

(a) Disconnect the E2 engine coolant temperature (ECT) sensor connector.

(b) Connect terminals 1 and 2 of the engine coolant temperature sensor wire harness side connector.

(c) Turn the ignition switch to ON.

(d) When using hand−held tester, enter the following menu: DIAGNOSIS / ENHANCED OBD II / DATA LIST / ALL / COOLANT TEMP.

CHECK:

Read the temperature value on the hand−held tester.

OK:

Standard: 140°C (284°F)

OK	Confirm good connection at sensor. If OK, replace engine coolant temperature sensor.

NG

3	Check for open in harness or ECM.

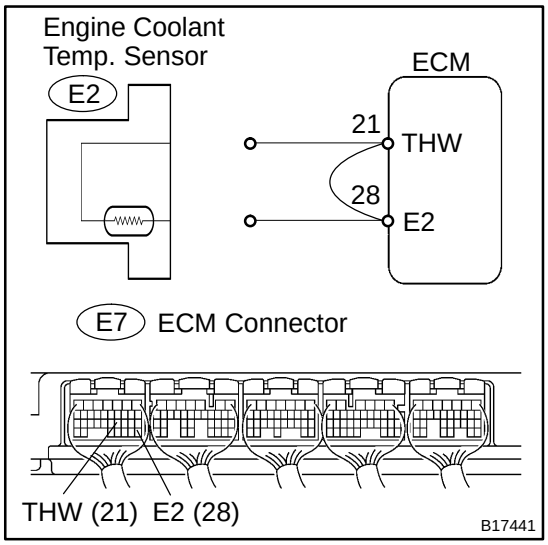

PREPARATION:

(a) Disconnect the E2 engine coolant temperature sensor connector.

(b) Connect terminals THW and E2 of the E7 ECM connector.

HINT:

Before checking, do a visual and contact pressure checks for the ECM connector.

(c) Turn the ignition switch to ON.

(d) When using hand−held tester, enter the following menu: DIAGNOSIS / ENHANCED OBD II / DATA LIST / ALL / COOLANT TEMP.

CHECK:

Read the temperature value on the OBD II scan tool or the hand−held tester.

OK:

Standard: 140°C (284°F)

OK	Repair or replace harness or connector.

NG

Confirm good connection at ECM. If OK, replace ECM (See page SF−66).

4	Check for short in harness and ECM.

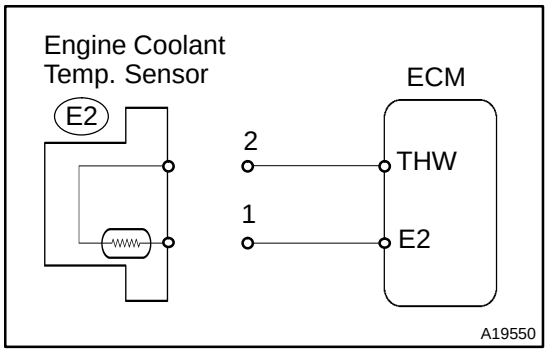

PREPARATION:

(a) Disconnect the E2 engine coolant temperature sensor connector.
(b) Turn the ignition switch to ON.
(c) When using hand−held tester, enter the following menu: DIAGNOSIS / ENHANCED OBD II / DATA LIST / ALL / COOLANT TEMP.

CHECK:

Read the temperature value on the hand−held tester.

OK:

Standard: −40°C (−40°F)

OK	Replace engine coolant temperature sensor.

NG

5	Check for short in harness or ECM.

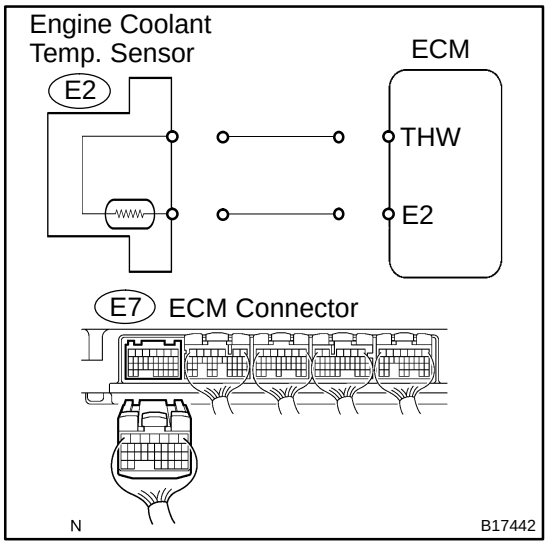

PREPARATION:

(a) Disconnect the E7 ECM connector.
(b) Turn the ignition switch to ON.
(c) When using hand−held tester, enter the following menu: DIAGNOSIS / ENHANCED OBD II / DATA LIST / ALL / COOLANT TEMP.

CHECK:

Read the temperature value on the hand−held tester.

OK:

Standard: −40°C (−40°F)

OK	Repair or replace harness or connector.

NG

Replace ECM (See page SF−66).

DIDTD−01

DTC	P0120	Throttle/Pedal Position Sensor/Switch ”A” Circuit

DTC	P0122	Throttle/Pedal Position Sensor/Switch ”A” Circuit Low Input

DTC	P0123	Throttle/Pedal Position Sensor/Switch ”A” Circuit High Input

DTC	P0220	Throttle/Pedal Position Sensor/Switch ”B” Circuit

DTC	P0222	Throttle/Pedal Position Sensor/Switch ”B” Circuit Low Input

DTC	P0223	Throttle/Pedal Position Sensor/Switch ”B” Circuit High Input

DTC	P2135	Throttle/Pedal Position Sensor/Switch ”A”/”B” Voltage Correlation

HINT:
This is the purpose for the ”throttle position sensor”.

CIRCUIT DESCRIPTION

HINT:

- This Electrical Throttle Control System (ETCS) does not use a throttle cable.
- This throttle position sensor is a non−contact type.

The throttle position sensor is mounted on the throttle body. It detects the opening angle of the throttle valve. This sensor is electronically controlled and uses Hall−effect elements, so that accurate control and reliability can be obtained. The throttle position sensor has 2 sensor elements / signal outputs: VTA1 and VTA2. VTA1 used to detect the throttle opening angle and VTA2 is used to detect malfunctions in VTA1. Voltage applied to VTA1 and VTA2 change between 0 V and 5 V in proportion to the opening angle of the throttle valve. There are several checks that the ECM performs to confirm proper operation of the throttle position sensor and VTA1.

The ECM judges the current opening angle of the throttle valve from these signals input from terminals VTA1 and VTA2, and the ECM controls the throttle motor to make the throttle valve angle properly in response to driver inputs.

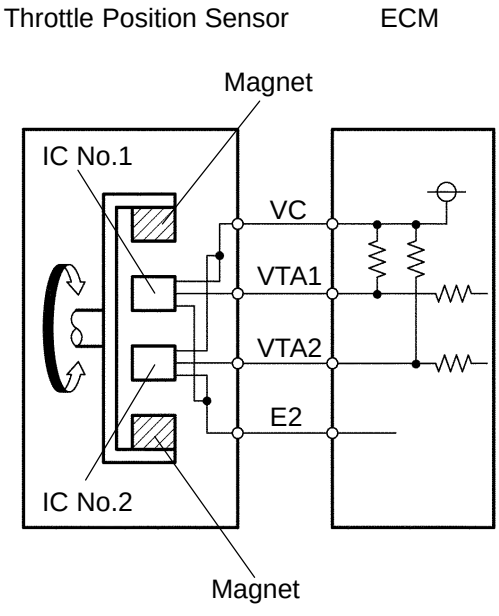

A19755

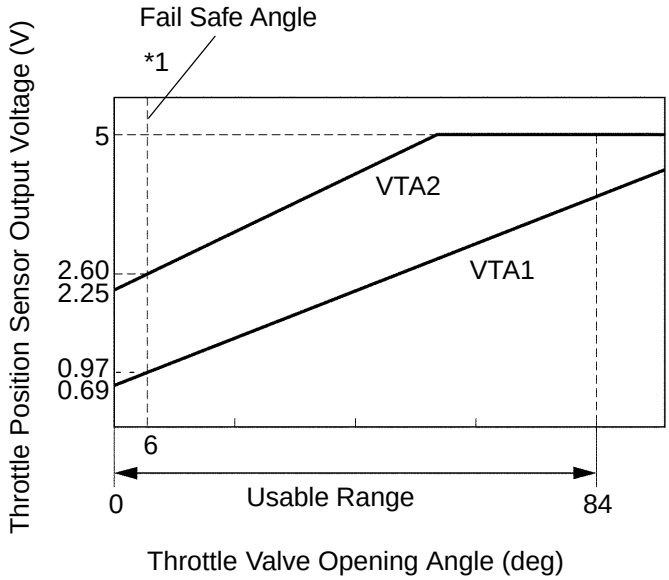

A21037

Throttle Valve Fully Closed
(Throttle Position expressed as percentage
(VTA1) 10 to 20%)

Throttle Valve Fully Opened
(Throttle Position expressed as percentage
(VTA1) 64 to 96%)

*1: Fail Safe Angle 7°
(Throttle Position expressed as percentage
(VTA1) about 10 to 24%)

DTC No.	DTC Detection Condition	Trouble Area
Condition (a) of DTC P0120, P0122, P0123, P0220, P0222 or P0223 continues for 2 sec. (Open or short in the throttle control motor and sensor circuit)		
P0120	Detection conditions for DTCs P0122 and P0123 are not satisfied but condition (a) is satisfied (a) VTA1 is ”0.2 V or less” or VTA1 is ”4.535 V or more”	• Open or short in throttle control motor and sensor circuit • Throttle control motor and sensor • ECM
P0122	(a) VTA1 is 0.2 V or less	• Short in throttle control motor and sensor circuit • Throttle control motor and sensor • Short in VTA1 circuit • Open in VC circuit • ECM
P0123	(a) VTA1 is 4.535 V or more	• Open in throttle control motor and sensor circuit • Throttle control motor and sensor • Open in VTA1 circuit • Open in E2 circuit • VC and VTA1 circuit are short−circuited • ECM
P0220	Detection conditions for DTCs P0222 and P0223 are not satisfied but condition (a) is satisfied (a) VTA2 is ”1.75 V or less” or VTA2 is ”4.8 V or more”	• Throttle control motor and sensor • ECM
P0222	(a) VTA2 is 1.75 V or less	• Throttle control motor and sensor • Short in VTA2 circuit • Open in VC circuit • ECM
P0223	(a) VTA2 is ”4.8 V or more” and VTA1 is ”0.2 V or more” and VTA1 is ”2.02 V or less”	• Throttle control motor and sensor • Open in VTA2 circuit • Open in E2 circuit • VC and VTA2 circuit are short−circuited • ECM
P2135	Condition (a) continues for 0.5 sec. or more, or condition (b) continues for 0.4 sec. or more: (a) Difference between VTA1 and VTA2 is 0.02 V or less (b) VTA1 is ”0.2 V or less” and VTA2 is ”1.75 V or less”	• VTA1 and VTA2 circuit are short−circuited • Throttle control motor and sensor • ECM

HINT:

- After confirming DTCs, use the hand−held tester to confirm the throttle valve opening percentage and closed throttle position switch condition.
- THROTTLE POS means the VTA1 signal and the THROTTLE POS #2 means the VTA2 signal.
  Reference (Normal condition):

Tester display	Accelerator pedal fully released	Accelerator pedal fully depressed
THROTTLE POS	10 to 24%	64 to 96%
THROTTLE POS #2	2.1 to 3.1 V	4.5 to 5.5 V

MONITOR DESCRIPTION

The ECM uses throttle position sensor to monitor the throttle valve opening angle.

(a) There is an expected specific voltage difference between VTA1 and VTA2 for each throttle opening angle.

- If the difference between VTA1 and VTA2 is incorrect the ECM interprets this as a fault and will set a DTC.

(b) VTA1 and VTA2 each have a specific voltage operating range.

- If VTA1 or VTA2 is out of the normal operating range the ECM interprets this as a fault and will set a DTC.

(c) VTA1 and VTA2 should never be close to the same voltage levels.

- If VTA1 is within the range of ± 0.02 V of VTA2 the ECM interprets this as a short circuit in the throttle position sensor system and will set a DTC.

FAIL SAFE

If the ETCS (Electronic Throttle Control System) has a malfunction, the ECM cuts off current to the throttle control motor. The throttle control valve returns to a predetermined opening angle (approximately 16°) by the force of the return spring. The ECM then adjusts the engine output by controlling the fuel infection (intermittent fuel−cut) and ignition timing in accordance with the accelerator pedal opening angle to enable the vehicle to continue at a minimum speed.

If the accelerator pedal is depressed firmly and slowly, the vehicle can be driven slowly.

If a ”pass” condition is detected and then the ignition switch is turned OFF, the fail−safe operation will stop and the system will return to normal condition.

MONITOR STRATEGY

Related DTCs	P0120	Throttle position sensor (sensor 1) range check (Fluttering)
	P0122	Throttle position sensor (sensor 1) range check (Low voltage)
	P0123	Throttle position sensor (sensor 1) range check (High voltage)
	P0220	Throttle position sensor (sensor 2) range check (Fluttering)
	P0222	Throttle position sensor (sensor 2) range check (Low voltage)
	P0223	Throttle position sensor (sensor 2) range check (High voltage)
	P2135	Throttle position sensor range check (Correlation)
Required sensors/components	Throttle position sensor	
Frequency of operation	Continuous	
Duration	Accelerator pedal ON: 2 sec. Accelerator pedal OFF: 10 sec. P2135: 0.5 sec. or 0.4 sec.	
MIL operation	Immediate	
Sequence of operation	None	

TYPICAL ENABLING CONDITIONS

The monitor will run whenever these DTCs are not present	See page DI−18
Throttle control motor power	ON

TYPICAL MALFUNCTION THRESHOLDS

Detection Criteria	Threshold
P0120:	
VTA1 voltage	0.2 V or less, or 4.535 V or more
P0122:	
VTA1 voltage	0.2 V or less
P0123:	
VTA1 voltage	4.535 V or more
P0220:	
VTA2 voltage	1.75 V or less, or 4.8 V or more
P0222:	
VTA2 voltage	1.75 V or less
P0223:	
Both of the following conditions are met for 2 sec. or more:	Condition 1 and 2
1. VTA1 voltage	0.2 to 2.02 V
2. VTA2 voltage	4.8 V or more
P2135:	
Different between VTA1 and VTA2 voltage	0.02 V or less
Both of the following conditions are met:	Condition 1 and 2
1. VTA1 voltage	0.2 V or less
2. VTA2 voltage	1.75 V or less

COMPONENT OPERATING RANGE

Parameter	Standard Value
Throttle position sensor VTA1 voltage	0.6 to 3.96 V
Throttle position sensor VTA2 voltage	2.25 to 5.0 V

WIRING DIAGRAM

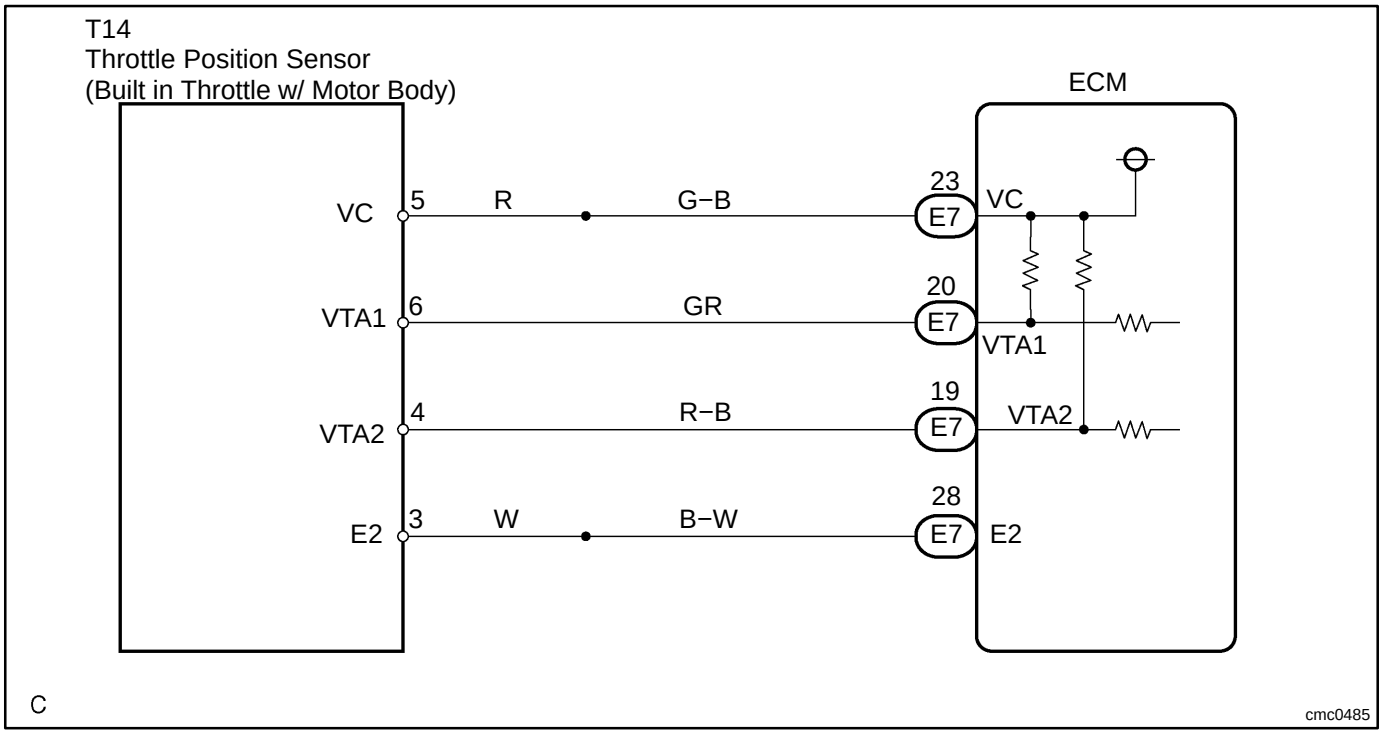

INSPECTION PROCEDURE

HINT:

- If DTCs related to different system that have terminal E2 as the ground terminal are output simultaneously, terminal E2 may have an open circuit.
- Read freeze frame data using the hand−held tester. Freeze frame data records the engine conditions when a malfunction is detected. When troubleshooting, freeze frame data can help determine if the vehicle was running or stopped, if the engine was warmed up or not, if the air−fuel ratio was lean or rich, as well as other data from the time when a malfunction occurred.

1	**Connect hand−held tester, and read the voltage for throttle position sensor data.**

PREPARATION:

Enter the following menu: DIAGNOSIS / ENHANCED OBD II / DATA LIST / ALL / THROTTLE POS and THROTTLE POS #2.

CHECK:

Read voltage value displayed on the hand−held tester.

OK:

RESULT:

Throttle position expressed as percentage and voltage				Trouble area	Proceed to
Accelerator pedal released		Accelerator pedal depressed			
THROTTLE POS (VTA1)	THROTTLE POS #2 (VTA2)	THROTTLE POS (VTA1)	THROTTLE POS #2 (VTA2)		
0 %	0 to 0.2 V	0 %	0 to 0.2 V	VC circuit open	A
100 %	4.5 to 5.5 V	100 %	4.5 to 5.5 V	E2 circuit open	
0 % or 100 %	2.1 to 3.1 V (Fail safe)	0 % or 100 %	2.1 to 3.1 V (Fail safe)	VTA1 circuit open or ground short	
about 16 % (Fail safe)	0 to 0.2 or 4.5 to 5.5 V	about 16 % (Fail safe)	0 to 0.2 or 4.5 to 5.5 V	VTA2 circuit open or ground short	
10 to 24 %	2.15 to 3.05 V	64 to 96 % (Does not fail safe)	4.5 to 5.5 V (Does not fail safe)	Throttle position sensor circuit is normal	B

B	**Go to step 5.**

A

2	**Check for open and short in harness and connector between ECM and throttle position sensor.**

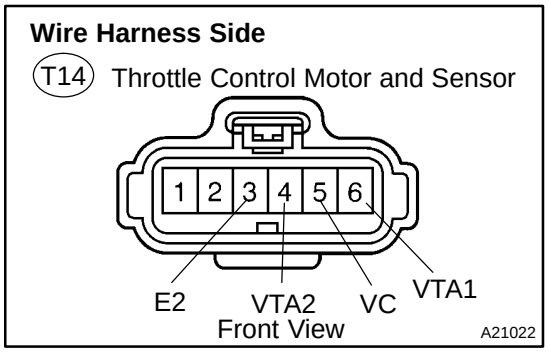

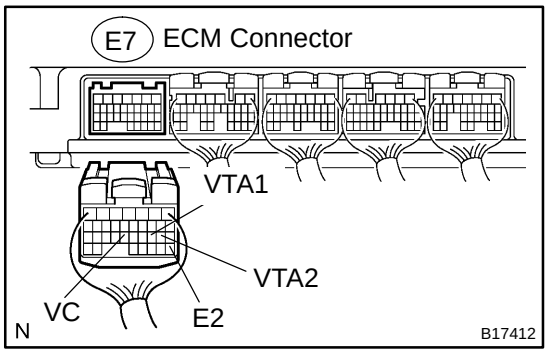

PREPARATION:

(a) Disconnect the T14 throttle control motor and sensor connector.

(b) Disconnect the E7 ECM connector.

CHECK:

Check the resistance between the wire harness side connectors.

OK:

Standard:

Tester Connection	Specified Condition
VC (T14−5) − VC (E7−23)	Below 1 Ω
VTA1 (T14−6) − VTA1 (E7−20)	Below 1 Ω
VTA2 (T14−4) − VTA2 (E7−19)	Below 1 Ω
E2 (T14−3) − E2 (E7−28)	Below 1 Ω
VC (T14−5) or VC (E7−23) − Body ground	10 kΩ or higher
VTA1 (T14−6) or VTA1 (E7−20) − Body ground	10 kΩ or higher
VTA2 (T14−4) or VTA2 (E7−19) − Body ground	10 kΩ or higher

NG → **Repair or replace harness or connector.**

OK

3	**Check voltage between terminals VC and E2 of ECM connector.**

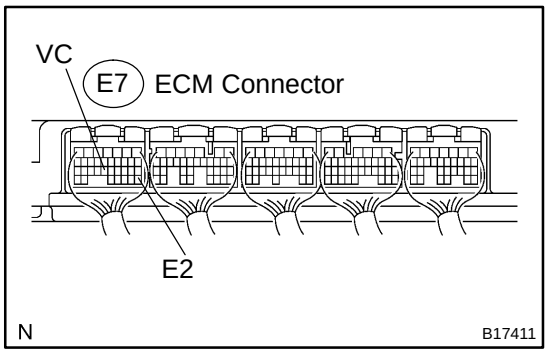

PREPARATION:

(a) Disconnect the T14 throttle control motor and sensor connector.

(b) Turn the ignition switch to ON.

CHECK:

Measure the voltage between the specified terminals of the E7 ECM connector.

OK:

Standard:

Tester Connection	Specified Condition
VC (E7−23) − E2 (E7−28)	4.5 to 5.5 V

NG → **Replace ECM (See page SF−66).**

OK

4	**Replace throttle body (See page SF−40).**

NEXT

5	**Check if DTC output recur.**

PREPARATION:

(a) Clear the DTC (See page DI−42).
(b) Start the engine.
(c) Run the engine at idle for 15 seconds or more.

CHECK:

Read the DTC.

RESULT:

Display (DTC Output)	Proceed to
”P0120, P0122, P0123, P0220, P0222, P0223 and/or P2135” are output again	A
No DTC output	B

B → **System is OK.**

A

Replace ECM (See page SF−66).

DIDTH−01

DTC	P0136	Oxygen Sensor Circuit Malfunction (Bank 1 Sensor 2)

DTC	P0137	Oxygen Sensor Circuit Low Voltage (Bank 1 Sensor 2)

DTC	P0138	Oxygen Sensor Circuit High Voltage (Bank 1 Sensor 2)

DTC	P0156	Oxygen Sensor Circuit Malfunction (Bank 2 Sensor 2)

DTC	P0157	Oxygen Sensor Circuit Low Voltage (Bank 2 Sensor 2)

DTC	P0158	Oxygen Sensor Circuit High Voltage (Bank 2 Sensor 2)

HINT:
Sensor 2 refers to the sensor mounted behind the Three−Way Catalytic Converter (TWC) and located far from the engine assembly.

CIRCUIT DESCRIPTION

In order to obtain a high purification rate of the carbon monoxide (CO), hydrocarbon (HC) and nitrogen oxide (NOx) components in the exhaust gas, a TWC is used. For the most efficient use of the TWC, the air−fuel ratio must be precisely controlled so that it is always close to the stoichiometric air−fuel level. For the purpose of helping the ECM to deliver accurate air−fuel ratio control, a Heated Oxygen (HO2) sensor is used.
The HO2 sensor is located behind the TWC, and detects the oxygen concentration in the exhaust gas. Since the sensor is integrated with the heater that heats the sensing portion, it is possible to detect the oxygen concentration even when the intake air volume is low (the exhaust gas temperature is low).
When the air−fuel ratio becomes lean, the oxygen concentration in the exhaust gas is rich. The HO2 sensor informs the ECM that the post−TWC air−fuel ratio is lean (low voltage, i.e. less than 0.45 V).
Conversely, when the air−fuel ratio is richer than the stoichiometric air−fuel level, the oxygen concentration in the exhaust gas becomes lean. The HO2 sensor informs the ECM that the post−TWC air−fuel ratio is rich (high voltage, i.e. more than 0.45 V). The HO2 sensor has the property of changing its output voltage drastically when the air−fuel ratio is close to the stoichiometric level.
The ECM uses the supplementary information from the HO2 sensor to determine whether the air−fuel ratio after the TWC is rich or lean, and adjusts the fuel injection time accordingly. Thus, if the HO2 sensor is work-

ing improperly due to internal malfunctions, the ECM is unable to compensate for deviations in the primary air−fuel ratio control.

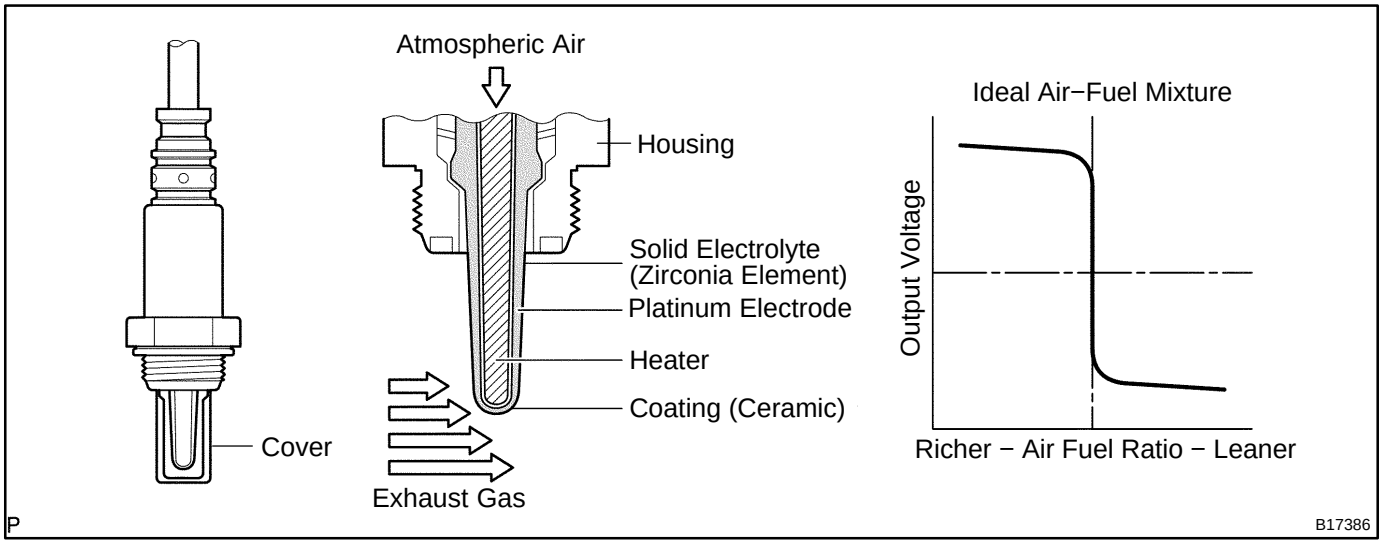

DTC No.	DTC Detecting Condition	Trouble Area
P0136 P0156	The rear heated oxygen sensor voltage during active control is 0.2 V or less, or 0.6 V or more. (2 trip detection logic)	• Open or short in HO2 sensor (sensor 2) circuit • HO2 sensor (sensor 2) • HO2 sensor heater (sensor 2) • Air−Fuel Ratio (A/F) sensor (sensor 1) • EFI relay • Gas leakage from exhaust system
P0136 P0156	(a) and (b) is met for more than 30 seconds : (a) Estimated rear oxygen sensor temperature is less than 800˚C (1,472˚F). (b) Rear oxygen sensor impedance is les than 5 Ω.	• Open or short in HO2 sensor (sensor 2) circuit • HO2 sensor (sensor 2) • HO2 sensor heater (sensor 2) • Air−Fuel Ratio (A/F) sensor (sensor 1) • EFI relay • Gas leakage from exhaust system
P0137 P0157	The rear heated oxygen sensor voltage during active control is 0.2 V or less. (2 trip detection logic)	• Open or short in HO2 sensor (sensor 2) circuit • HO2 sensor (sensor 2) • HO2 sensor heater (sensor 2) • Air−Fuel Ratio (A/F) sensor (sensor 1) • EFI relay • Gas leakage from exhaust system
P0137 P0157	(a) and (b) is met for more than 90 seconds : (a) Estimated rear oxygen sensor temperature is less than 450˚C (842˚F). (b) Rear oxygen sensor impedance is les than 15 kΩ.	• Open or short in HO2 sensor (sensor 2) circuit • HO2 sensor (sensor 2) • HO2 sensor heater (sensor 2) • Air−Fuel Ratio (A/F) sensor (sensor 1) • EFI relay • Gas leakage from exhaust system
P0138 P0158	The rear heated oxygen sensor voltage during active control is 0.6 V or more. (2 trip detection logic)	• Open or short in HO2 sensor (sensor 2) circuit • HO2 sensor (sensor 2) • HO2 sensor heater (sensor 2) • Air−Fuel Ratio (A/F) sensor (sensor 1) • EFI relay • Gas leakage from exhaust system
P0138 P0158	The rear heated oxygen sensor output voltage 1.2 V or higher for more than 30 seconds. (2 trip detection logic)	• Open or short in HO2 sensor (sensor 2) circuit • HO2 sensor (sensor 2) • HO2 sensor heater (sensor 2) • Air−Fuel Ratio (A/F) sensor (sensor 1) • EFI relay • Gas leakage from exhaust system

MONITOR DESCRIPTION

Active Air−Fuel Ratio Control

The ECM usually performs air−fuel ratio feedback control so that the Air−Fuel Ratio (A/F) sensor output indicates a near stoichiometric air−fuel level. This vehicle includes active air−fuel ratio control in addition to regular air−fuel ratio control. The ECM performs active air−fuel ratio control to detect any deterioration in the Three−Way Catalytic Converter (TWC) and Heated Oxygen (HO2) sensor malfunctions (refer to the diagram below).

Active air−fuel ratio control is performed for approximately 15 to 20 seconds while driving with a warm engine. During active air−fuel ratio control, the air−fuel ratio is forcibly regulated to become lean or rich by the ECM. If the ECM detects a malfunction, one of the following DTCs is set: DTC P0136, P0156 (abnormal voltage output), P0137, P0157 (open circuit) and P0138, P0158 (short circuit).

Abnormal Voltage Output of HO2 Sensor (DTC P0136, P0156)

While the ECM is performing active air−fuel ratio control, the air−fuel ratio is forcibly regulated to become rich or lean. If the sensor is not functioning properly, the voltage output variation is small. For example, when the HO2 sensor voltage does not decrease to less than 0.21 V and does not increase to more than 0.59 V during active air−fuel ratio control, the ECM determines that the sensor voltage output is abnormal and sets DTC P0136.

HO2 SENSOR CIRCUIT MALFUNCTION (P0136, P0156: ABNORMAL VOLTAGE)

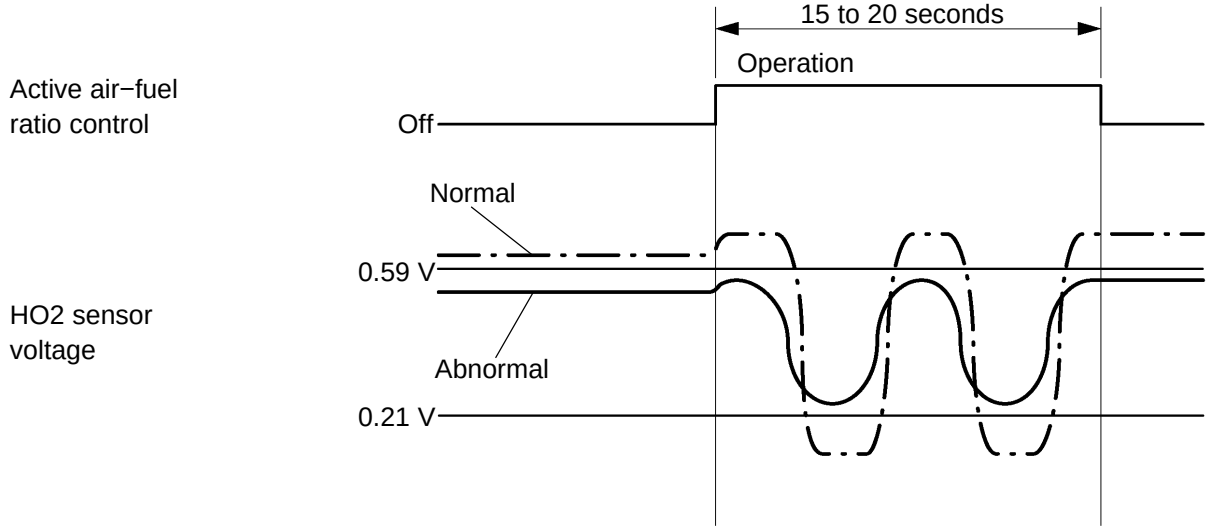

Open or Short in the Heated Oxygen (HO2) Sensor Circuit (DTC P0137, P0157, P0138 or P0158)

During active air−fuel ratio control, the ECM calculates the Oxygen Storage Capacity (OSC)* of the Three−Way Catalytic Converter (TWC) by forcibly regulating the air−fuel ratio to become rich or lean.

If the HO2 sensor has an open or short, or the voltage output of the sensor noticeably decreases, the OSC indicates an extraordinarily high value. Even if the ECM attempts to continue regulating the air−fuel ratio to become rich or lean, the HO2 sensor output does not change.

While performing active air−fuel ratio control, when the target air−fuel ratio is rich and the HO2 sensor voltage output is 0.21 V or less (lean), the ECM interprets this as an abnormally low sensor output voltage and sets DTC P0137 or P0157. When the target air−fuel ratio is lean and the voltage output is 0.59 V or more (rich) during active air−fuel ratio control, the ECM determines that the sensor voltage output is abnormally high, and sets DTC P0138 or P0158.

HINT:

DTC P0138 or P0158 is also set if the HO2 sensor voltage output is more than 1.2 V for 30 seconds or more.

*: The TWC has the capability to store oxygen. The OSC and the emission purification capacity of the TWC are mutually related. The ECM determines whether the catalyst has deteriorated, based on the calculated OSC value (see page DI−228).

HO2 SENSOR CIRCUIT LOW VOLTAGE (P0137, P0157: OPEN)

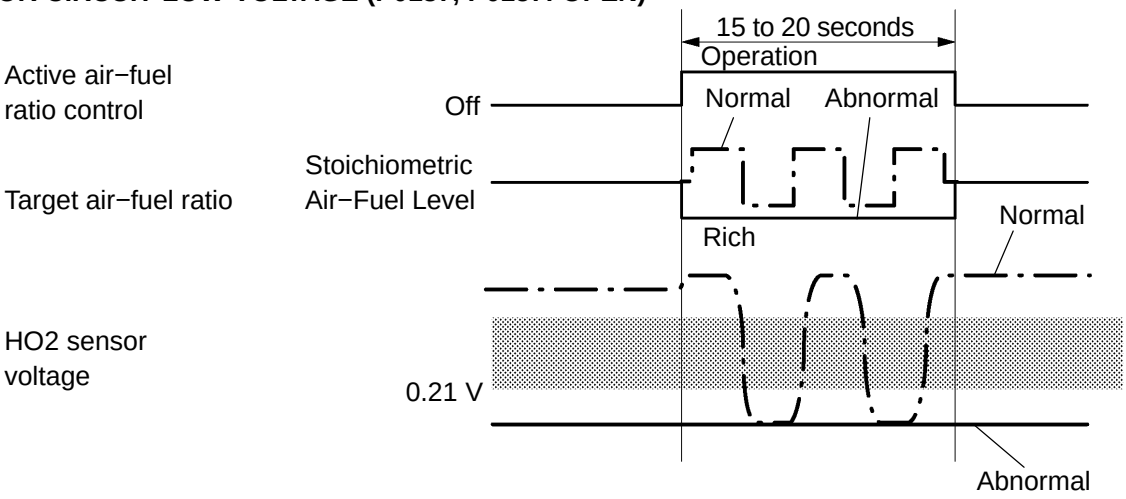

HO2 SENSOR CIRCUIT HIGH VOLTAGE (P0138, P0158: SHORT)

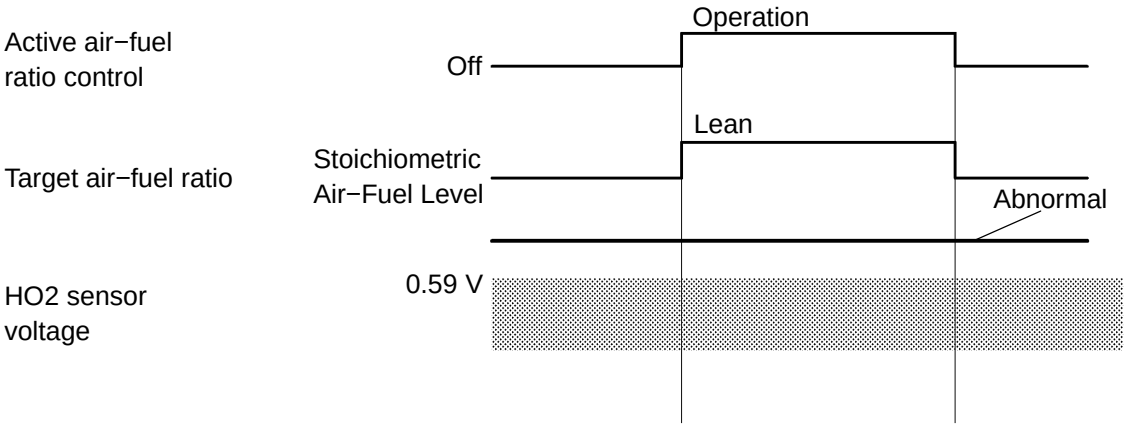

Y

B17388

High or Low Impedance of Heated Oxygen (HO2) Sensor (DTC P0136, P0156, P0137 or P0157)

Interrelation between temperature of the element and impedance:

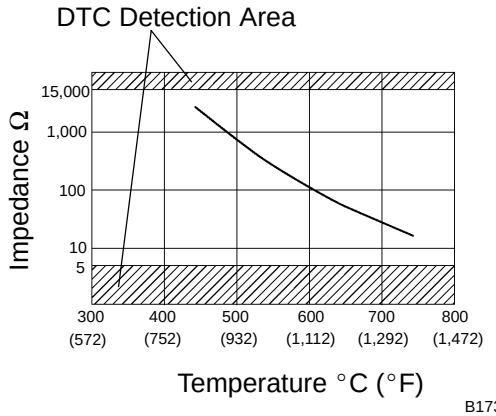

During normal air−fuel ratio feedback control, there are small variations in the exhaust gas oxygen concentration. In order to continuously monitor the slight variation of the HO2 sensor signal while the engine is running, the impedance* of the sensor is measured by the ECM. The ECM determines that there is a malfunction in the sensor when the measured impedance deviates from the standard range.

*: The effective resistance in an alternating current electrical circuit.

HINT:

- The impedance can not be measured using an ohmmeter.
- DTC P0136 or P0156 indicates the deterioration of the HO2 sensor. The ECM sets the DTC by calculating the impedance of the sensor when the typical enabling conditions are satisfied (1 driving cycle).
- DTC P0137 or P0157 indicates an open or short circuit in the HO2 sensor (1 driving cycle). The ECM sets this DTC when the impedance of the sensor exceeds the threshold 15 kΩ.

MONITOR STRATEGY

Related DTCs	P0136	Heated rear oxygen sensor (Bank 1) output voltage (Output voltage)
		Heated rear oxygen sensor (Bank 1) impedance (Low)
	P0137	Heated rear oxygen sensor (Bank 1) output voltage (Low voltage)
		Heated rear oxygen sensor (Bank 1) impedance (High)
	P0138	Heated rear oxygen sensor (Bank 1) output voltage (High voltage)
		Heated rear oxygen sensor (Bank 1) output voltage (Extremely high)
	P0156	Heated rear oxygen sensor (Bank 2) output voltage (Output voltage)
		Heated rear oxygen sensor (Bank 2) impedance (Low)
	P0157	Heated rear oxygen sensor (Bank 2) output voltage (Low voltage)
		Heated rear oxygen sensor (Bank 2) impedance (High)
	P0158	Heated rear oxygen sensor (Bank 2) output voltage (High voltage)
		Heated rear oxygen sensor (Bank 2) output voltage (Extremely high)
Required sensors/components	Main sensors/components	Heated rear oxygen sensor
	Related sensors/components	Mass air flow meter
Frequency of operation	Once per driving cycle: Active air−fuel ratio control detection Continuous: Others	
Duration	20 sec.:Heated oxygen sensor output (Output voltage, High voltage, Low voltage) 30 sec.: Heated oxygen sensor impedance (Low) 90 sec.: Heated oxygen sensor impedance (High) 10 sec.: Heated oxygen sensor voltage (Extremely high)	
MIL operation	2 driving cycles	
Sequence of operation	None	

TYPICAL ENABLING CONDITIONS

Item	Specification	
	Minimum	Maximum
The monitor will run whenever these DTCs are not present	See page DI−18	
Heated oxygen sensor output voltage (Output voltage, High voltage and Low voltage):		
Active air−fuel ratio control	Performing	
Active air−fuel ratio control being when all of following conditions met	−	
Battery voltage	11 V	−
ECT	75°C (167°F)	−
Idle	OFF	
Engine RPM	−	3,200 rpm
A/F sensor status	Activated	

Fuel system status	Closed loop	
Fuel−cut	OFF	
Engine load	10 to 70%	
Heated oxygen sensor impedance (Low):		
Battery voltage	11 V	−
Estimated sensor temperature	−	700°C (1,292°F)
ECM monitor	Completed	
P0606	Not set	
Heated oxygen sensor impedance (High):		
Battery voltage	11 V	−
Estimated sensor temperature	520°C (968°F)	−
ECM monitor	Completed	
P0606	Not set	
Heated oxygen sensor output voltage (Extremely high):		
Battery voltage	11 V	−
Time after engine start	2 sec.	−

TYPICAL MALFUNCTION THRESHOLDS

Detection Criteria	Threshold
Heated oxygen sensor output voltage (Output voltage):	
Either of the following conditions is met:	Condition 1 or 2
1. All of the following conditions are met:	Condition (a), (b) and (c)
(a) Commanded air−fuel ratio	14.3 or less
(b) Rear HO2S voltage	0.21 to 0.59 V
(c) OSC (Oxygen Strage Capacity of catalyst)	2.5 g or more
2. All of the following conditions are met:	Condition (a), (b) and (c)
(a) Commanded air−fuel ratio	14.9 or more
(b) Rear HO2S voltage	0.21 to 0.59 V
(c) OSC (Oxygen Strage Capacity of catalyst)	2.5 g or more
Heated oxygen sensor output voltage (Low voltage):	
All of the following conditions are met:	Condition 1, 2 and 3
1. Commanded air−fuel ratio	14.3 or less
2. Rear HO2S voltage	Less than 0.21 V
3. OSC (Oxygen Strage Capacity of catalyst)	2.5 g or more
Heated oxygen sensor output voltage (High voltage):	
All of the following conditions are met:	Condition 1, 2 and 3
1. Commanded air−fuel ratio	14.9 or more
2. Rear HO2S voltage	More than 0.59 V
3. OSC (Oxygen Strage Capacity of catalyst)	2.5 g or more
Heated oxygen sensor impedance (Low):	
Duration of following condition	30 sec. or more
Heated oxygen sensor impedance	Less than 5 Ω
Heated oxygen sensor impedance (High):	
Duration of following condition	90 sec. or more
Rear oxygen sensor impedance	15 kΩ or more

Heated oxygen sensor output voltage (Extremely high):	
Duration of following condition	10 sec. or more
Rear oxygen sensor voltage	More than 1.2 V

COMPONENT OPERATING RANGE

Parameter	Standard Value
Rear oxygen sensor voltage	1.2 V or more

O2S TEST RESULT

Refer to page DI−24 for detailed information on O2S TEST RESULT.

Test ID	Test Item	Description	Unit Conversion	Unit	Standard Value
$07	Output Voltage	Minimum rear HO2 sensor output voltage	Multiply by 0.005	V	Less than TEST LIMIT
$08	Output Voltage	Maximum rear HO2 sensor output voltage	Multiply by 0.005	V	More than TEST LIMIT
$91	OSC	Maximum OSC in catalytic converter	Multiply by 0.0156	g	Less than TEST LIMIT

If the sensor voltage is outside the standard values, the ECM interprets this as a malfunction and sets a DTC.

WIRING DIAGRAM

Refer to DTC P2195 on page DI−312.

CONFIRMATION DRIVING PATTER

HINT:

- This confirmation driving pattern is used in steps 5, 8 and 11 of the following diagnostic troubleshooting procedure when using a hand−held tester.
- Performing this confirmation pattern will activate the Heated Oxygen (HO2) sensor monitor. (The catalyst monitor is performed simultaneously.) This is very useful for verifying the completion of a repair.

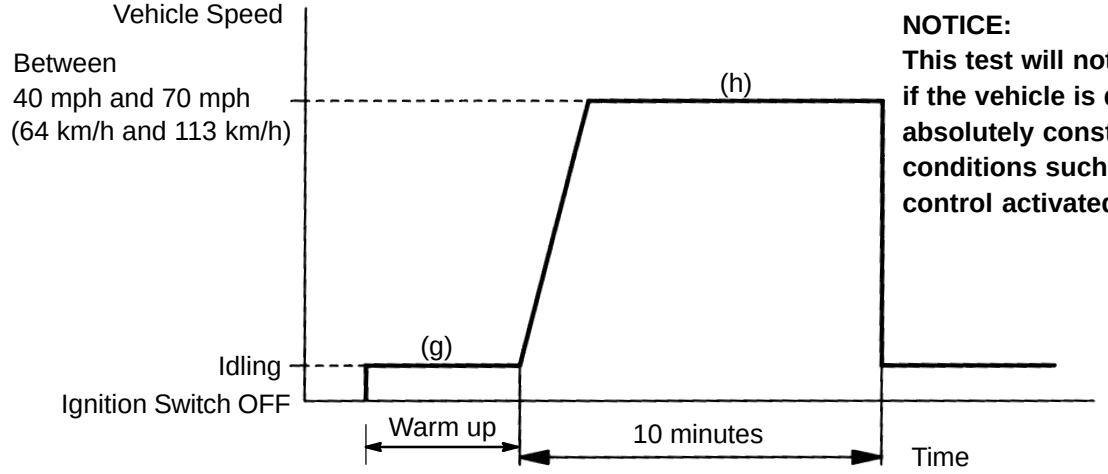

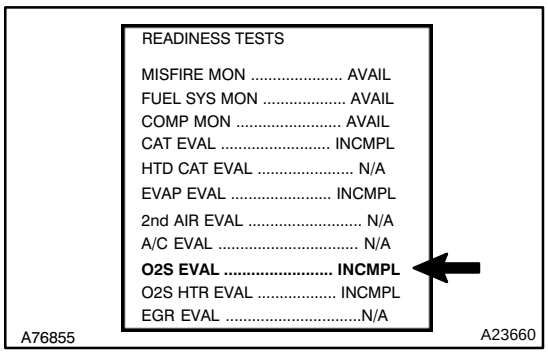

(a) Connect a hand−held tester to the DLC3.
(b) Turn the ignition switch to ON.
(c) Turn the tester ON.
(d) Clear DTCs (where set) (see page DI−42).
(e) Select the following menu items: DIAGNOSIS / CARB OBD II / READINESS TESTS.
(f) Check that O2S EVAL is INCMPL (incomplete).
(g) Start the engine and warm it up.
(h) Drive the vehicle at 40 mph to 70 mph (64 km/h to 113 km/h) for at least 10 minutes.
(i) Note the state of the Readiness Tests items. Those items will change to COMPL (complete) as O2S EVAL monitor operates.
(j) On the tester, select the following menu items: DIAGNOSIS / ENHANCED OBD II / DTC INFO / PENDING CODES and check if any DTCs (any pending DTCs) are set.

HINT:
If O2S EVAL does not change to COMPL, and any pending DTCs fail to set, extend the driving time.

INSPECTION PROCEDURE

HINT:
Hand−held tester only:
Narrowing down the trouble area is possible by performing ACTIVE TEST of the following ”A/F CONTROL” (Heated oxygen sensor or another can be distinguished).
(a) Perform ACTIVE TEST by hand−held tester (A/F CONTROL).
HINT:
”A/F CONTROL” is the ACTIVE TEST which changes the injection volume to −12.5 % or +25 %.
(1) Connect the hand−held tester to the DLC3 on the vehicle.
(2) Turn the ignition switch ON.
(3) Warm up the engine with the engine speed at 2,500 rpm for approximately 90 seconds.
(4) Select the menu ”DIAGNOSIS / ENHANCED OBD II / ACTIVE TEST / A/F CONTROL”.
(5) Perform ”A/F CONTROL” with the engine in an idle condition (press the right or left button).

RESULT:

Heated oxygen sensor reacts in accordance with increase and decrease of injection volume
+25 % → rich output: More than 0.5 V
−12.5 % → lean output: Less than 0.4 V

NOTICE:

There is a few seconds delay in the sensor 1 (front sensor) output. And there is approximately 20 seconds delay in the sensor 2 (rear sensor).

The following A/F CONTROL procedure enables the technician to check and graph the voltage output of the heated oxygen sensors.

For displaying the graph indication, first enter ”ACTIVE TEST / A/F CONTROL / USER DATA,” then select ”02S B1S1and O2S B1S2” by pressing ”YES” button, and push ”ENTER” button before pressing ”F4” button.

	Output voltage of heated oxygen sensor (sensor 1: front sensor)	Output voltage of heated oxygen sensor (sensor 2: rear sensor)	Mainly suspected trouble area
Case 1	Injection volume +25 % −12.5 % Output voltage More than 0.5 V Less than 0.4 V **OK**	Injection volume +25 % −12.5 % Output voltage More than 0.5 V Less than 0.4 V **OK**	—
Case 2	Injection volume +25 % −12.5 % Output voltage Almost no reaction **NG**	Injection volume +25 % −12.5 % Output voltage More than 0.5 V Less than 0.4 V **OK**	Sensor 1: front sensor (sensor 1, heater, sensor 1 circuit)
Case 3	Injection volume +25 % −12.5 % Output voltage More than 0.5 V Less than 0.4 V **OK**	Injection volume +25 % −12.5 % Output voltage Almost no reaction **NG**	Sensor 2: rear sensor (sensor 2, heater, sensor 2 circuit)
Case 4	Injection volume +25 % −12.5 % Output voltage Almost no reaction **NG**	Injection volume +25 % −12.5 % Output voltage Almost no reaction **NG**	Extremely rich or lean actual air−fuel ratio (Injector, fuel pressure, gas leakage in exhaust system, etc.)

HINT:

- If different DTCs that are related to different system are output simultaneously while terminal E2 is used as a ground terminal, terminal E2 may be open.
- Read freeze frame data using the hand−held tester. Freeze frame data records the engine conditions when a malfunction is detected. When troubleshooting, it is useful for determining whether the vehicle was running or stopped, the engine was warmed up or not, the air−fuel ratio was lean or rich, etc. when a malfunction occurred.

1	**Read output DTC.**

PREPARATION:

(a) Connect the hand−held tester to the DLC3.
(b) Turn the ignition switch to ON and push the hand−held tester main switch ON.
(c) When using hand−held tester, enter the following menu: DIAGNOSIS / ENHANCED OBD II / DTC INFO / CURRENT CODES.

CHECK:

Read the DTC using the hand−held tester.

RESULT:

Display (DTC Output)	Proceed to
P0138, P0158	A
P0137, P0157	B
P0136, P0156	C

HINT:

If any other codes besides P0136, P0137, P0138, P0156, P0157 and/or P0158 are output, perform the troubleshooting for those DTCs first.

B → **Go to step 14.**

C → **Go to step 7.**

A

2	**Check output voltage of heated oxygen sensor.**

PREPARATION:

(a) Connect the hand−held tester to the DLC3.
(b) After warming up the engine, run the engine at 2,500 rpm for 3 minutes.
(c) When using hand−held tester, enter the following menu: DIAGNOSIS / ENHANCED OBD II / DATA LIST / ALL / O2S B1S2 or B2S2.
(d) Allow the engine to idle.

CHECK:

Read the Heated Oxygen (HO2) sensor output voltage while idling.

RESULT:

HO2 Sensor Output Voltages	Proceed To
More than 1.2 V	A
Less than 1.0 V	B

B → **Go to step 5.**

A

3	Check for short in harness and connector between terminal OX1B and HT1B, OX2B and HT2B of ECM.

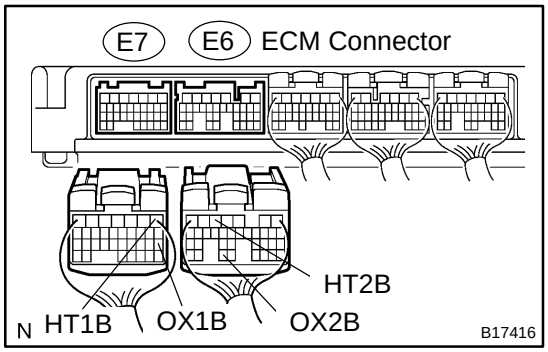

PREPARATION:

(a) Turn the ignition switch to OFF and wait for 5 minutes.

(b) Disconnect the E6 and E7 ECM connectors.

CHECK:

Check the resistance.

OK:

Standard:

Tester Connections	Specified Conditions
HT1B (E7−1) − OX1B (E7−18)	10 kΩ or higher
HT2B (E6−5) − OX2B (E6−33)	10 kΩ or higher

NG	Replace ECM (See page SF−66).

NG

4	Check resistance of heated oxygen sensor heater.

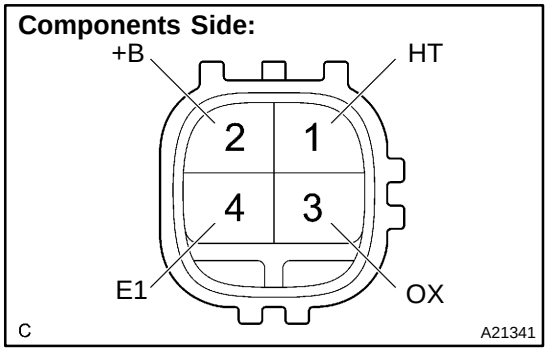

PREPARATION:

Disconnect the heated oxygen sensor connector.

CHECK:

Measure resistance between terminals of the heated oxygen sensor.

OK:

Standard:

Tester Connection	Specified Condition
HT (1) − +B (2)	11 to 16 Ω at 20°C (68°F)
+B (2) − OX (3)	10 kΩ or higher

NG	Replace heated oxygen sensor.

OK

Repair or replace harness or connector.

5	Perform confirmation driving pattern.

NEXT

6	**Check whether DTC output recurs (DTC P0138, P0158)**

CHECK:

(a) On the hand−held tester, select the following menu items: DIAGNOSIS / ENHANCED OBD II / DTC INFO / CURRENT CODES.

(b) Read DTCs.

RESULT:

Display (DTC Output)	Proceed To
P0138 or P0158	A
No output	B

B → **Check for intermittent problems (See page DI−11).**

A →

Replace heated oxygen sensor.

7	**Check output voltage of heated oxygen sensor.**

PREPARATION:

(a) Connect the hand−held tester to the DLC3.

(b) Turn the ignition switch to ON and turn the tester ON.

(c) Start the engine.

(d) Select the following menu items: DIAGNOSIS / ENHANCED OBD II / DATA LIST / ALL / O2S B1S2.

(e) After warming up the engine, run the engine at an engine speed of 2,500 rpm for 3 minutes.

CHECK:

Read the output voltage of the HO2 sensor when the engine rpm is suddenly increased.

HINT:

Quickly accelerate the engine to 4,000 rpm 3 times using the accelerator pedal.

Standard: Fluctuates between 0.4 V or less and 0.5 V or more.

NG → **Go to step 14.**

OK →

8	**Perform confirmation driving pattern.**

NEXT →

9	**Check whether DTC output recurs (DTC P0136, P0156)**

CHECK:

(a) On the hand−held tester, select the following menu items: DIAGNOSIS / ENHANCED OBD II / DTC INFO / CURRENT CODES.

(b) Read DTCs.

RESULT:

Display (DTC Output)	Proceed To
P0136 or P0156	A
No output	B

B → **Check for intermittent problems (See page DI−11).**

A

10	**Replace heated oxygen sensor.**

NEXT

11	**Perform confirmation driving pattern.**

NEXT

12	**Check whether DTC output recurs (DTC P0136, P0156)**

CHECK:

(a) On the hand−held tester, select the following menu items: DIAGNOSIS / ENHANCED OBD II / DTC INFO / CURRENT CODES.

(b) Read DTCs.

RESULT:

Display (DTC Output)	Proceed To
P0136 or P0156	A
No output	B

B → **Repair completed.**

A

13	Perform active test (injection volume).

PREPARATION:

(a) Connect the hand−held tester to the DLC3.
(b) Start the engine and turn the tester ON.
(c) Warm up the engine.
(d) Select the following menu items: DIAGNOSIS / ENHANCED OBD II / ACTIVE TEST / INJ VOL.

CHECK:

Change the fuel injection volume using the tester, monitoring the voltage output of Air−Fuel Ratio (A/F) and HO2 sensors displayed on the tester.

HINT:

- Change the fuel injection volume within the range of −12 % and +12 %. The injection volume can be changed in 1 % graduations within the range.
- The A/F sensor is displayed as AFS B1S1, and the HO2 sensor is displayed as O2S B1S2, on hand−held testers.

RESULT:

Tester Display (Sensor)	Voltage Variations	Proceed To
AFS B1S1 (AFS B2S1) (A/F)	Alternates between more and less than 3.3 V	OK
AFS B1S1 (AFS B2S1) (A/F)	Remains at more than 3.3 V	NG
AFS B1S1 (AFS B2S1) (A/F)	Remains at less than 3.3 V	NG

HINT:

A normal HO2 sensor voltage (O2S B1S2) reacts in accordance with increases and decreases in fuel injection volumes. When the A/F sensor voltage remains at either less or more than 3.3 V despite the HO2 sensor indicating a normal reaction, the A/F sensor is malfunctioning.

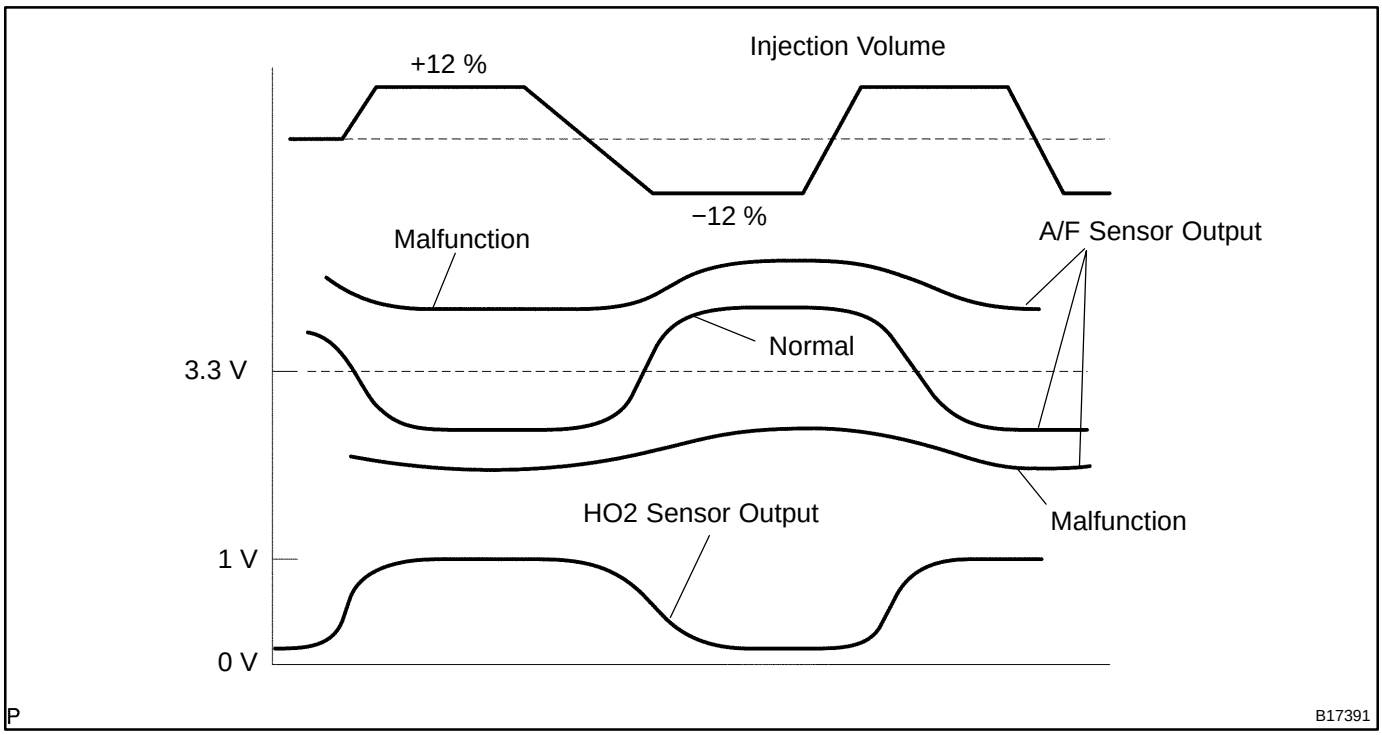

NG → **Replace air−fuel ratio (A/F) sensor.**

OK

Check and repair extremely rich or lean actuarial air fuel ratio (injector, fuse pressure, gas leakages from exhaust system, etc.)

14	Check for exhaust gas leakage.

CHECK:

Check for exhaust gas leakage from the exhaust manifold and pipe.

OK:

No exhaust gas leakage.

NG → **Repair or replace exhaust gas leakage point.**

OK

15	Inspect heated oxygen sensor.

Components Side:

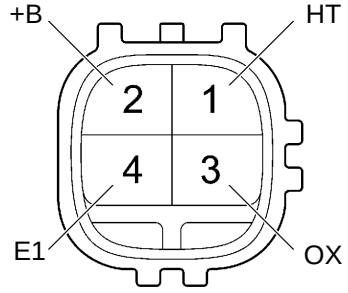

PREPARATION:

Disconnect the HO2 sensor connector.

CHECK:

Measure the resistance between the terminals of the HO2 sensor connector.

OK:

Standard:

Tester Connections	Specified Conditions
HT (2) − +B (1)	11 to 16 Ω at 20°C (68°F)
HT (2) − E (3)	10 kΩ or higher

NG → **Replace heated oxygen sensor.**

OK

16	Check EFI relay.

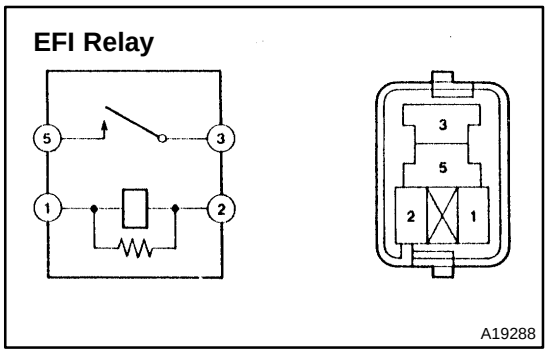

PREPARATION:

Remove the EFI relay from the engine room J/B.

CHECK:

Inspect the EFI relay.

OK:

Standard:

Terminal No.	Condition	Specified Condition
3 − 5	Usually	10 KΩ or higher
3 − 5	Apply B+ between terminals 1 and 2	Below 1 Ω

NG → **Replace EFI relay.**

OK

17	**Check for open and short in harness and connector between ECM and heated oxygen sensor.**

Component Side:

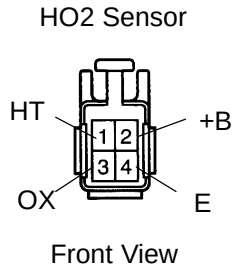

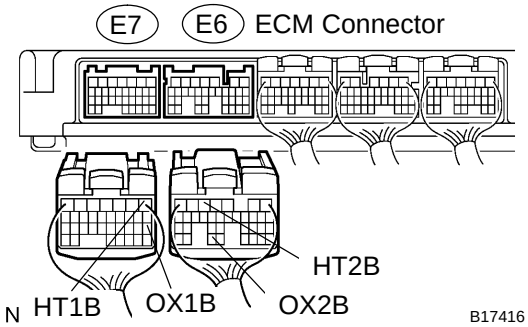

PREPARATION:

(a) Disconnect the heated oxygen sensor connector.

(b) Disconnect the E6 and E7 ECM connectors.

CHECK:

Measure the resistance between the wire harness side connectors.

OK:

Standard:

Tester Connection	Specified Condition
OX (H4−3) − OX1B (E7−18)	Below 1 Ω
HT (H4−1) − HT1B (E7−1)	Below 1 Ω
OX (H6−3) − OX2B (E6−33)	Below 1 Ω
HT (H6−1) − HT2B (E6−5)	Below 1 Ω
OX (H4−3) or OX1B (E7−18) − Body ground	10 kΩ or higher
HT (H4−1) or HT1B (E7−1) − Body ground	10 kΩ or higher
OX (H6−3) or OX2B (E6−33) − Body ground	10 kΩ or higher
HT (H6−1) or HT2B (E6−5) − Body ground	10 kΩ or higher

Reference (Bank 1 Sensor 2 System Drawing)

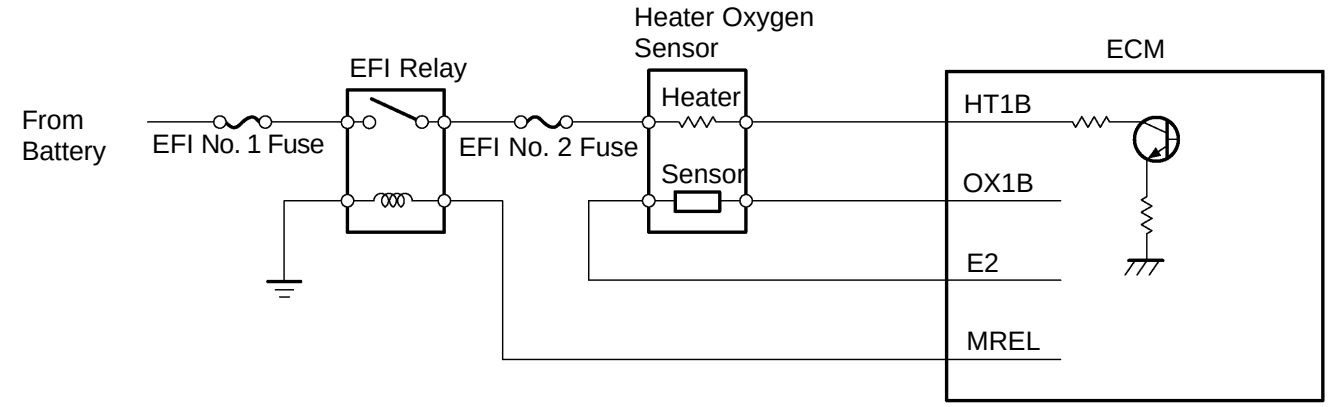

NG → **Repair or replace harness or connector.**

OK

Replace heated oxygen sensor.

DIDTI−01

DTC	P0171	System too Lean (Bank 1)

DTC	P0172	System too Rich (Bank 1)

DTC	P0174	System too Lean (Bank 2)

DTC	P0175	System too Rich (Bank 2)

CIRCUIT DESCRIPTION

The fuel trim is related to the feedback compensation value, not to the basic injection time. The fuel trim consists of both the short−term and long−term fuel trims.

The short−term fuel trim is fuel compensation that is used to constantly maintain the air−fuel ratio at stoichiometric levels. The signal from the Air−Fuel Ratio (A/F) sensor indicates whether the air−fuel ratio is rich or lean compared to the stoichiometric ratio. This triggers a reduction in the fuel injection volume if the air−fuel ratio is rich and an increase in the fuel injection volume if it is lean.

Factors such as individual engine differences, wear over time and changes in operating environment cause short−term fuel trim to vary from the central value. The long−term fuel trim, which controls overall fuel compensation, compensates for long−term deviations in the fuel trim from the central value caused by the short−term fuel trim compensation.

If both the short−term and long−term fuel trims are lean or rich beyond predetermined values, it is interpreted as a malfunction, and the ECM illuminates the MIL and sets a DTC.

DTC No.	DTC Detecting Condition	Trouble Area
P0171 P0174	When air−fuel ratio feedback is stable after warming up the engine, fuel trim is considered to be in error on LEAN side (2 trip detection logic)	• Air induction system • Injector blockage • Mass air flow meter • Engine coolant temperature sensor • Fuel pressure • Gas leakage in exhaust system • Open or short in heated oxygen sensor (bank 1, 2 sensor 1) circuit • Heated oxygen sensor (bank 1, 2 sensor 1) • Heated oxygen sensor heater (bank 1, 2 sensor 1) • EFI relay • PCV piping • ECM
P0172 P0175	When air−fuel ratio feedback is stable after warming up the engine, fuel trim is considered to be in error on RICH side (2 trip detection logic)	• Injector leak, blockage • Mass air flow meter • Engine coolant temperature sensor • Ignition system • Fuel pressure • Gas leakage in exhaust system • Open or short in heated oxygen sensor (bank 1, 2 sensor 1) circuit • Heated oxygen sensor (bank 1, 2 sensor 1) • ECM

HINT:

- When DTC P0171 or P0174 is recorded, the actual air−fuel ratio is on the LEAN side. When DTC P0172 or P0175 is recorded, the actual air−fuel ratio is on the RICH side.
- If the vehicle runs out of fuel, the air−fuel ratio is LEAN and DTC P0171 or P0174 may be recorded. The MIL then comes on.
- If the total of the short−term fuel trim value and long−term fuel trim value is within ± 35 % (engine coolant temperature is more than 75 °C (167°F)), the system is functioning normally.

MONITOR DESCRIPTION

Under closed−loop fuel control, fuel injection volumes that deviate from those estimated by the ECM cause changes in the long−term fuel trim compensation value. The long−term fuel trim is adjusted when there are persistent deviations in the short−term fuel trim values. Deviations from the ECM's estimated fuel injection volumes also affect the average fuel trim learning value, which is a combination of the average short−term fuel trim (fuel feedback compensation value) and the average long−term fuel trim (learning value of the air−fuel ratio). If the average fuel trim learning value exceeds the malfunction thresholds, the ECM interprets this a fault in the fuel system and sets a DTC.

Example:

The average fuel trim leaning value is more than +35 % or less than −35 %, the ECM interprets this as a fuel system malfunction.

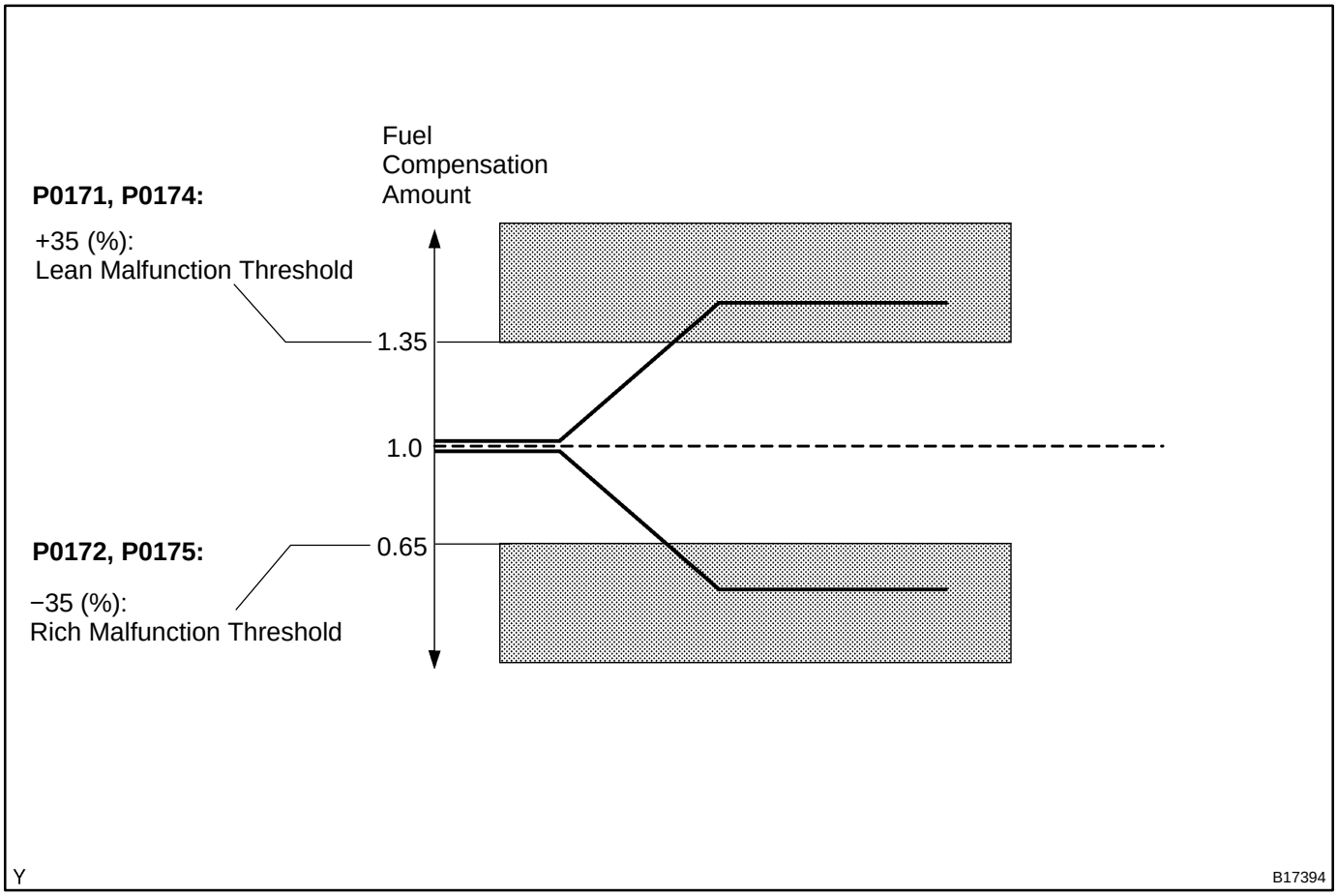

MONITOR STRATEGY

Related DTCs	P0171	Fuel system lean (Bank 1)
	P0172	Fuel system rich (Bank 1)
	P0174	Fuel system lean (Bank 2)
	P0175	Fuel system rich (Bank 2)
Required sensors/components	Main sensors/components	Fuel system
	Related sensors/components	Engine coolant temperature sensor, Mass air flow meter, Crankshaft position sensor, A/F sensor
Frequency of operation	Continuous	
Duration	10 sec.	
MIL operation	2 driving cycles	
Sequence of operation	None	

TYPICAL ENABLING CONDITIONS

Item	Specification	
	Minimum	Maximum
The monitor will run whenever these DTCs are not present	See page DI−18	
Battery voltage	11 V	−
Fuel system status	Closed−loop	
Either of the following conditions is met:	Condition 1 or 2	
1. Engine RPM	−	1,100 rpm
2. Intake air amount per revolution	0.22 g/sec.	−
Catalyst monitor	No executed	

TYPICAL MALFUNCTION THRESHOLDS

Detection Criteria	Threshold
EVAP purge−cut	Executing
Either of the following conditions is met	Condition 1 or 2
1. Average between short−term fuel trim and long−term fuel trim	35% or more (varies with ECT)
2. Average between short−term fuel trim and long−term fuel trim	−35% or less (varies with ECT)

WIRING DIAGRAM

Refer to DTC P2195 on page DI−312.

INSPECTION PROCEDURE

HINT:

Hand−held tester only:

Malfunctioning areas can be identified by performing the A/F CONTROL function provided in the ACTIVE TEST. The A/F CONTROL function can help to determine whether the Air−Fuel Ratio (A/F) sensor, Heated Oxygen (HO2) sensor and other potential trouble areas are malfunctioning.

The following instructions describe how to conduct the A/F CONTROL operation using a hand−held tester.

(1) Connect a hand−held tester to the DLC3.
(2) Start the engine and turn the tester ON.
(3) Warm up the engine at an engine speed of 2,500 rpm for approximately 90 seconds.
(4) On the tester, select the following menu items: DIAGNOSIS / ENHANCED OBD II / ACTIVE TEST / A/F CONTROL.
(5) Perform the A/F CONTROL operation with the engine in an idling condition (press the RIGHT or LEFT button to change the fuel injection volume).
(6) Monitor the voltage outputs of the A/F and HO2 sensors (AFS B1S1 (AFS B2S1) and OS2 B1S2 (OS2 B2S2)) displayed on the tester.

HINT:

- The A/F CONTROL operation lowers the fuel injection volume by 12.5 % or increases the injection volume by 25 %.
- Each sensor reacts in accordance with increases and decreases in the fuel injection volume.

Standard:

Tester Display (Sensor)	Injection Volumes	Status	Voltages
AFS B1S1 (AFS B2S1) (A/F)	+25 %	Rich	Less than 3.0
AFS B1S1 (AFS B2S1) (A/F)	−12.5 %	Lean	More than 3.35
O2S B1S2 (O2S B2S2) (HO2)	+25 %	Rich	More than 0.55
O2S B1S2 (O2S B2S2) (HO2)	−12.5 %	Lean	Less than 0.4

NOTICE:

The Air−Fuel Ratio (A/F) sensor has an output delay of a few seconds and the Heated Oxygen (HO2) sensor has a maximum output delay of approximately 20 seconds.

- Following the A/F CONTROL procedure enables technicians to check and graph the voltage outputs of both the A/F and HO2 sensors.
- To display the graph, select the following menu items on the tester: DIAGNOSIS / ENHANCED OBD II / ACTIVE TEST / A/F CONTROL / USER DATA / AFS B1S1 and O2S B1S2, and press the YES button and then the ENTER button followed by the F4 button.

Case	A/F Sensor (Sensor 1) Output Voltage	HO2 Sensor (Sensor 2) Output Voltage	Main Suspected Trouble Areas
1	Injection volume +25 % −12.5 % Output voltage More than 3.35 V Less than 3.0 V **OK**	Injection volume +25 % −12.5 % Output voltage More than 0.55 V Less than 0.4V **OK**	—
2	Injection volume +25 % −12.5 % Output voltage Almost no reaction **NG**	Injection volume +25 % −12.5 % Output voltage More than 0.55 V Less than 0.4V **OK**	● A/F sensor ● A/F sensor heater ● A/F sensor circuit
3	Injection volume +25 % −12.5 % Output voltage More than 3.35 V Less than 3.0V **OK**	Injection volume +25 % −12.5 % Output voltage Almost no reaction **NG**	● HO2 sensor ● HO2 sensor heater ● HO2 sensor circuit
4	Injection volume +25 % −12.5 % Output voltage Almost no reaction **NG**	Injection volume +25 % −12.5 % Output voltage Almost no reaction **NG**	● Injector ● Fuel pressure ● Gas leakage from exhaust system (Air−fuel ratio extremely lean or rich)

HINT:

- Read freeze frame data using a hand−held tester or OBD II scan tool. Freeze frame data record the engine condition when malfunctions are detected. When troubleshooting, freeze frame data can help determine if the vehicle was moving or stationary, if the engine was warmed up or not, if the air−fuel ratio was lean or rich, and other data, from the time the malfunction occurred.
- A low A/F sensor voltage could be caused by a rich air−fuel mixture. Check for conditions that would cause the engine to run rich.
- A high A/F sensor voltage could be caused by a lean air−fuel mixture. Check for conditions that would cause the engine to run lean.

1	**Check any other DTCs output (in addition to DTC P0171, P0172, P0174 or P0175).**

PREPARATION:

(a) Connect a hand−held tester to the DLC3.
(b) Turn the ignition switch to ON and turn the tester ON.
(c) Select the following menu items: DIAGNOSIS / ENHANCED OBD II / DTC INFO / CURRENT CODES.

CHECK:

Read DTCs.

Result:

Display (DTC Output)	Proceed To
P0171, P0172, P0174 or P0175	A
P0171, P0172, P0174 or P0175 and other DTCs	B

HINT:

If any DTCs other than P0171, P0172, P0174 or P0175 are output, troubleshoot those DTCs first.

B → **Go to DTC chart (See page DI−57).**

A

2	**Check connection of PCV piping.**

OK:

PCV hose is connected correctly and is not damaged.

NG → **Repair or replace PCV piping.**

OK

3	**Check air induction system (See page SF−1).**

CHECK:

Check the air induction system for vacuum leaks.

NG → **Repair or replace air induction system.**

OK

4	**Perform active test (A/F control).**

(a) Connect the hand−held tester to the DLC3.
(b) Start the engine and turn the tester ON.
(c) Warm up the engine at an engine speed of 2,500 rpm for approximately 90 seconds.
(d) On the tester, select the following menu items: DIAGNOSIS / ENHANCED OBD II / ACTIVE TEST / A/F CONTROL.
(e) Perform the A/F CONTROL operation with the engine in an idling condition (press the RIGHT or LEFT button to change the fuel injection volume).
(f) Monitor the voltage outputs of A/F and HO2 sensors(AFS B1S1 (AFS B2S1) and O2S B1S2 (O2S B2S2)) displayed on the tester.

HINT:

- The A/F CONTROL operation lowers the fuel injection volume by 12.5 % or increases the injection volume by 25 %.
- Each sensor reacts in accordance with increases and decreases in the fuel injection volume.

Standard:

Tester Display (Sensor)	Injection Volumes	Status	Voltages
AFS B1S1 (AFS B2S1) (A/F)	+25 %	Rich	Less than 3.0
AFS B1S1 (AFS B2S1) (A/F)	−12.5 %	Lean	More than 3.35
O2S B1S2 (O2S B2S2) (HO2)	+25 %	Rich	More than 0.55
O2S B1S2 (O2S B2S2) (HO2)	−12.5 %	Lean	Less than 0.4

Result:

Status AFS B1S1 (AFS B2S1)	Status O2S B1S2 (O2S B2S2)	A/F Condition and A/F Sensor Condition	Misfires	Suspected Trouble Areas	Proceed To
Lean/Rich	Lean/Rich	Normal	—	—	C
Lean	Lean	Actual air−fuel ratio lean	May occur	• PCV valve and hose • PCV hose connections • Injector blockage • Gas leakage from exhaust system • Air induction system • Fuel pressure • Mass Air Flow (MAF) meter • Engine Coolant Temperature (ECT) sensor	A
Rich	Rich	Actual air−fuel ratio rich	—	• Injector leakage or blockage • Gas leakage from exhaust system • Ignition system • Fuel pressure • MAF meter • ECT sensor	A
Lean	Lean/Rich	A/F sensor malfunction	—	• A/F sensor	B
Rich	Lean/Rich	A/F sensor malfunction	—	• A/F sensor	B

Lean: During A/F CONTROL, the A/F sensor output voltage (AFS) is consistently more than 3.35 V, and the HO2 sensor output voltage (O2S) is consistently less than 0.4 V.
Rich: During A/F CONTROL, the AFS is consistently less than 3.0 V, and the O2S is consistently more than 0.55 V.

B → **Go to step 11.**

C → **Go to step 15.**

A

5 Read value of coolant temperature.

PREPARATION:
(a) Connect the hand−held tester to the DLC3.
(b) Turn the ignition switch to ON and turn the tester ON.
(c) Select the following menu items: DIAGNOSIS / ENHANCED OBD II / DATA LIST / ALL / COOLANT TEMP.

CHECK:
Read the COOLANT TEMP twice, when the engine is cold and also when warmed up.

OK:
With cold engine: Same as ambient air temperature.
With warm engine: Between 75°C and 95°C (167°F and 203°F)

NG → **Replace engine coolant temperature sensor.**

OK

6	**Read value of mass air flow meter.**

PREPARATION:

(a) Connect the hand−held tester to the DLC3.
(b) Turn the ignition switch to ON and turn the tester ON.
(c) Select the following menu items: DIAGNOSIS / ENHANCED OBD II / DATA LIST / ALL / MAF and COOLANT TEMP.
(d) Allow the engine to idle until the COOLANT TEMP reaches 75°C (167°F) or more.

CHECK:

Read the MAF with the engine in an idling condition and at an engine speed of 2,500 rpm.

Standard:

MAF while engine idling: Between 1.4 gm/s and 2.3 gm/s (shift position: N, A/C: OFF).
MAF at engine speed of 2,500 rpm: Between 5.4 gm/s and 7.9 gm/s (shift position: N, A/C: OFF).

NG → **Replace mass air flow meter.**

OK

7	**Check fuel pressure (See page SF−5).**

CHECK:

Check the fuel pressure (high or low pressure).

NG → **Check and replace fuel pump, pressure regulator, fuel pipe line and filter (See page SF−1).**

OK

8	**Check exhaust system for gas leakage.**

CHECK:

Check for exhaust gas leakage from the exhaust manifold and pipe.

OK:

No exhaust gas leakage.

NG → **Repair or replace exhaust gas leakage point.**

OK

9	**Check for spark and ignition (See page IG−1).**

HINT:
If the spark plugs or ignition system malfunction, engine misfire may occur. The misfire counter can be read with the hand−held tester. Enter the following menus: DIAGNOSIS / ENHANCED OBD II / DATA LIST / MISFIRE / CYL#1 (to CYL#8).

NG → **Repair or replace ignition system.**

OK

10	**Check injector injection (See page SF−26).**

HINT:
If the injectors malfunction, engine misfires may occur. The misfire counter can be read with the hand−held tester. Enter the following menus: DIAGNOSIS / ENHANCED OBD II / DATA LIST / MISFIRE / CYL#1 (to CYL#8).

NG → **Replace injector.**

OK

11	**Check resistance of air−fuel ratio (A/F) sensor heater.**

Component Side:

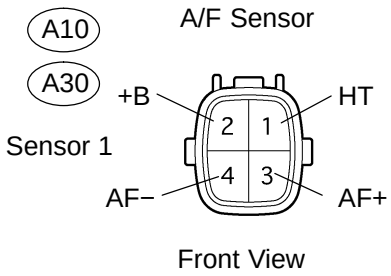

PREPARATION:
Disconnect the A10 or A30 air−fuel ratio (A/F) sensor connector.

CHECK:
Measure resistance between the terminals of the A/F sensor connector.

OK:

Standard:

Tester Connection	Specified Condition
HT (1) − +B (2)	1.8 to 3.4 Ω at 20°C (68°F)
HT (1) − AF− (4)	10 kΩ or higher

NG → **Replace air−fuel ratio (A/F) sensor.**

OK

12	Check A/F relay.

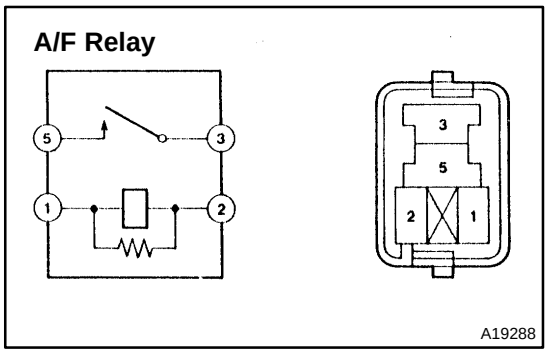

PREPARATION:

Remove the A/F relay from the engine room J/B.

CHECK:

Inspect the A/F relay.

OK:

Standard:

Terminal No.	Condition	Specified Condition
3 − 5	Usually	10 KΩ or higher
3 − 5	Apply B+ between terminals 1 and 2	Below 1 Ω

NG → **Replace A/F relay.**

OK

13	Check for open and short in harness and connector between ECM and A/F sensor.

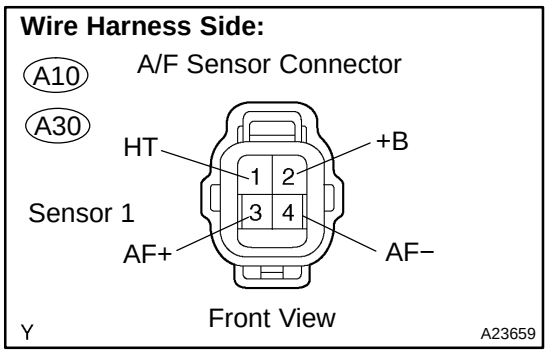

PREPARATION:

(a) Disconnect the A10 or A30 A/F sensor connector.

(b) Turn the ignition switch to ON.

CHECK:

Measure the voltage between the +B terminal of the A/F sensor connector and body ground.

OK:

Standard:

Tester Connections	Specified Conditions
+B (2) − Body ground	9 to 14 V

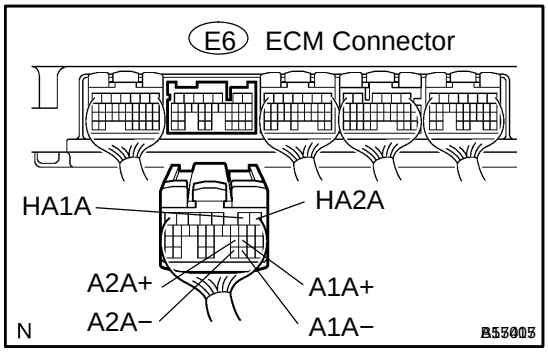

PREPARATION:

(a) Turn the ignition switch to OFF.

(b) Disconnect the E6 ECM connector.

CHECK:

Check the resistance.

OK:

Standard (Check for open):

Tester Connections	Specified Conditions
HT (A10−1) − HA1A (E6−2) HT (A30−1) − HA2A (E6−1)	Below 1 Ω
AF+ (A10−3) − A1A+ (E6−22) AF+ (A30−3) − A2A+ (E6−23)	Below 1 Ω
AF− (A10−4) − A1A− (E6−30) AF− (A30−4) − A2A− (E6−31)	Below 1 Ω

Standard (Check for short):

Tester Connections	Specified Conditions
HT (A10−1) or HA1A (E6−2) − Body ground HT (A30−1) or HA2A (E6−1) − Body ground	10 kΩ or higher
AF+ (A10−3) or A1A+ (E6−22) − Body ground AF+ (A30−3) or A2A+ (E6−23) − Body ground	10 kΩ or higher
AF− (A10−4) or A1A− (E6−30) − Body ground AF− (A30−4) or A2A− (E6−31) − Body ground	10 kΩ or higher

Reference (Bank 1 Sensor 1 System Drawing):

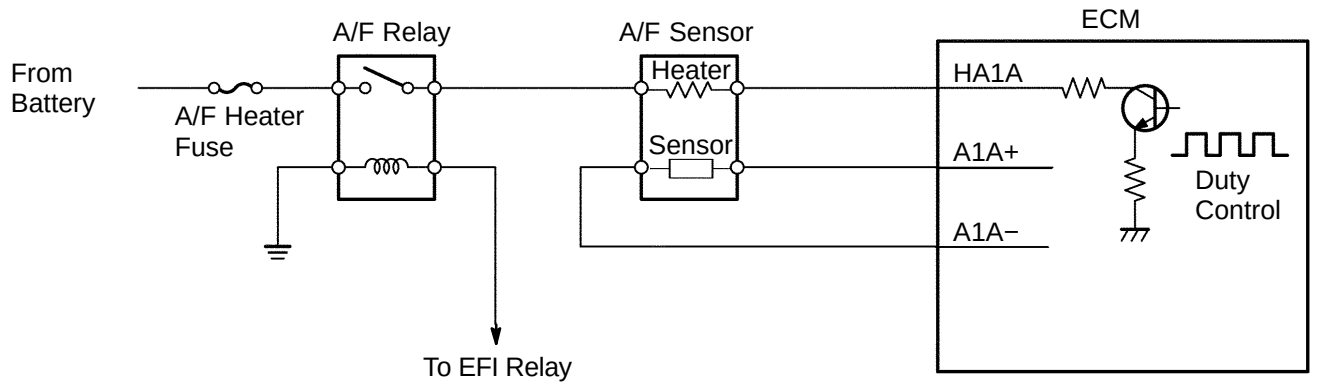

P A23512

NG → **Replace or replace harness or connector.**

OK

14	**Replace air fuel ratio sensor.**

NEXT

15	**Perform confirmation driving pattern.**

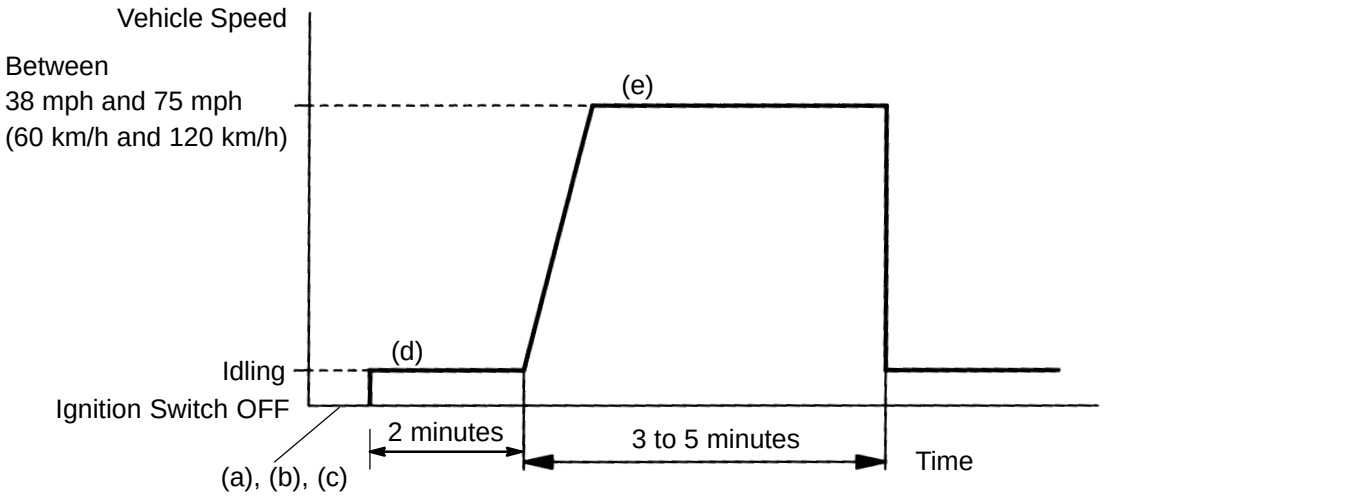

(a) Connect the hand−held tester to the DLC3.
(b) Turn the ignition switch to ON and turn the tester ON.
(c) Clear DTCs (see page DI−42).
(d) Switch the ECM from normal mode to check mode using the tester (see page DI−43).
(e) Start the engine and warm it up with all the accessories switched OFF.
(f) Drive the vehicle at 38 mph to 75 mph (60 km/h to 120 km/h) and at an engine speed of between 1,400 rpm and 3,200 rpm for 3 to 5 minutes.

HINT:

If the system is still malfunctioning, the MIL will be illuminated during step (e).

NOTICE:

If the conditions in this test are not strictly followed, no malfunction will be detected.

NEXT

16	Check whether DTC output recurs (DTC P0171, P0172, P0174 or P0175)

CHECK:

(a) On the hand−held tester, select the following menu items: DIAGNOSIS / ENHANCED OBD II / DTC INFO / CURRENT CODES.

(b) Read DTCs.

RESULT:

Display (DTC Output)	Proceed To
P0171, P0172, P0174 or P0175	A
No output	B

B → **Go to step 5.**

A

END

DIDTK−01

DTC	P0300	Random/Multiple Cylinder Misfire Detected

DTC	P0301	Cylinder 1 Misfire Detected

DTC	P0302	Cylinder 2 Misfire Detected

DTC	P0303	Cylinder 3 Misfire Detected

DTC	P0304	Cylinder 4 Misfire Detected

DTC	P0305	Cylinder 5 Misfire Detected

DTC	P0306	Cylinder 6 Misfire Detected

CIRCUIT DESCRIPTION

When a misfire occurs in the engine, hydrocarbons (HC) enter the exhaust in high concentrations. If this HC concentration is high enough, there could be an increase in exhaust emission levels. High concentrations of HC can also cause the temperature of the catalyst to increase, possibly damaging the catalyst. To prevent this increase in emissions and limit the possibility of thermal damage, the ECM monitors the misfire rate. When the temperature of the catalyst reaches a point of thermal degradation, the ECM will blink the MIL. For monitoring misfire, the ECM uses both the camshaft position sensor and the crankshaft position sensor. The camshaft position sensor is used to identify misfiring cylinders and the crankshaft position sensor is used to measure variations in the crankshaft rotation speed. The misfire counter increments when crankshaft rotation speed variations exceed threshold values.

If the misfiring rate exceeds the threshold value, which could cause emissions deterioration, the ECM illuminates the MIL.

DTC No.	DTC Detecting Condition	Trouble Area
P0300	Misfiring of random cylinders is detected	• Open or short in engine wire • Connector connection • Vacuum hose connection • Ignition system • Injector • Fuel pressure • Mass air flow meter • Engine coolant temperature sensor • Compression pressure • Valve clearance • Valve timing • PCV piping • ECM
P0301 P0302 P0303 P0304 P0305 P0306	Misfiring of each cylinder is detected	

HINT:
When several codes for a misfiring cylinder are recorded repeatedly but no random misfire code is recorded, it indicates that the misfires have been detected and recorded at different times.
Reference: Inspection using the oscilloscope.
With the engine idling, check the waveform between terminals #1 to #8 and E01 of the ECM connectors.
HINT:
The correct waveform is as shown in the illustration.

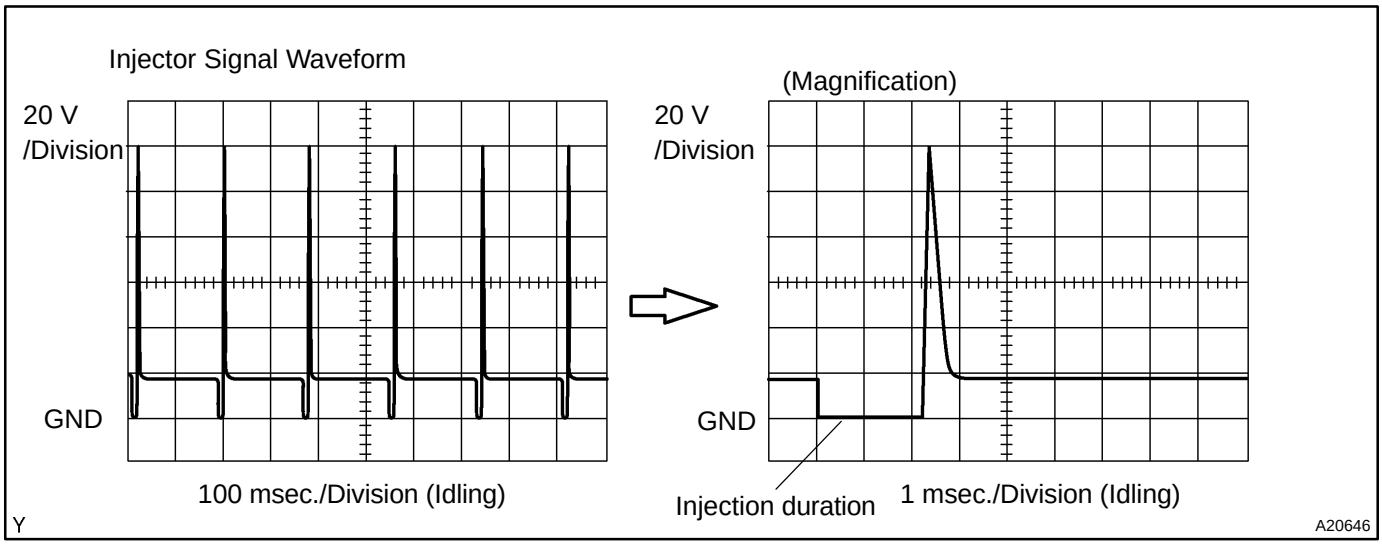

MONITOR DESCRIPTION

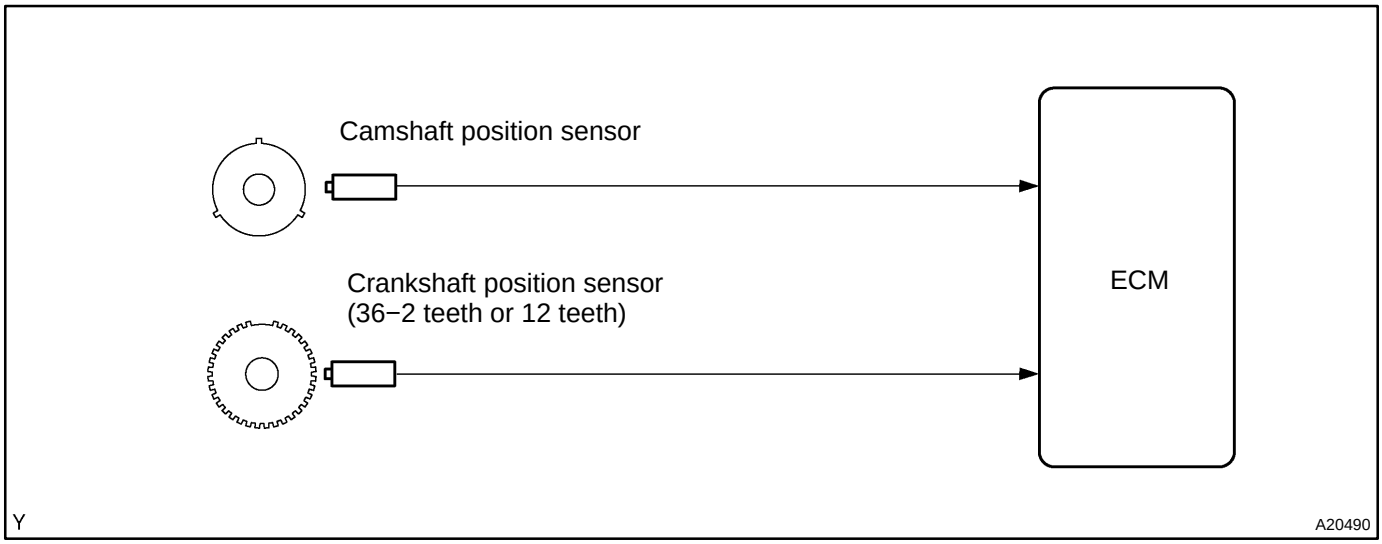

The ECM illuminates the MIL (2 trip detection logic) if:
The ECM will illuminate the MIL when the percentage of misfire exceeds the specified limit per 1,000 engine revolutions. One occurrence of excessive misfire during engine start will set the MIL. Four occurrences are required to set the MIL 1,000 revolutions after engine start.
The ECM blinks the MIL (the MIL blinks immediately) if:

- Within 200 engine revolutions at a high rpm, the threshold for ”percentage of misfire causing catalyst damage” is reached 1 time.
- Within 200 engine revolutions at a normal rpm, the threshold for ”percentage of misfire causing catalyst damage” is reached 3 time.

MONITOR STRATEGY

Related DTCs	P0300	Random/Multiple cylinder misfire detected
	P0301	Cylinder 1 misfire detected
	P0302	Cylinder 2 misfire detected
	P0303	Cylinder 3 misfire detected
	P0304	Cylinder 4 misfire detected
	P0305	Cylinder 5 misfire detected
	P0306	Cylinder 6 misfire detected
Required sensors/components	Main sensors/components	Camshaft position sensor, Crankshaft position sensor
	Related sensors/components	Engine coolant temperature sensor, Intake air temperature sensor, Throttle position sensor
Frequency of operation	Continuous	
Duration	Every 1,000 revolutions (soon after engine is started: 1 time, other: 4 times) (emission related misfire) Every 200 revolutions (1 or 3 times) (catalyst deteriorating misfire)	
MIL operation	2 driving cycles: MIL ON Immediate: MIL flashing (Catalyst deteriorating misfire)	
Sequence of operation	None	

TYPICAL ENABLING CONDITIONS

Item	Specification	
	Minimum	Maximum
All:		
The monitor will run whenever these DTCs are not present	See page DI−18	
Battery voltage	8 V	−
VVT system	Not operate by scan tool	
Engine RPM	450 to 5,400rpm (Manual transmission) 400 to 5,400rpm (Automatic transmission)	
Either of the following conditions is met:	Condition (a) or (b)	
(a) ECT at engine start	−7°C (19°F)	−
(b) ECT	20°C (68°F)	−
Fuel−cut	OFF	
Emission−related−misfire:		
First 1,000 revolutions after engine start, or check mode	Crankshaft 1,000 revolutions	
Except above	Crankshaft 1,000 revolutions x 4	
Catalyst−damage−misfire (MIL blinks):		
All of the following conditions 1, 2 and 3 are met	Crankshaft 200 revolutions	
1. Driving cycle	1st	
2. Check mode	OFF	
3. Engine RPM	−	2,800 rpm
Except above	Crankshaft 200 revolutions x 3	

TYPICAL MALFUNCTION THRESHOLDS

Detection Criteria	Threshold
Emission−related−misfire:	
Misfire rate:	2.9% or more (Manual transmission) 2.0% or more (Automatic transmission)
Catalyst−damage−misfire (MIL blinks):	
Number of misfire per 200 revolutions	77 or more (varies with intake air armount and RPM)
Paired cylinders misfire	Detected

WIRING DIAGRAM

Refer to DTC P0351 on page DI−216 for the wiring diagram of the ignition system.

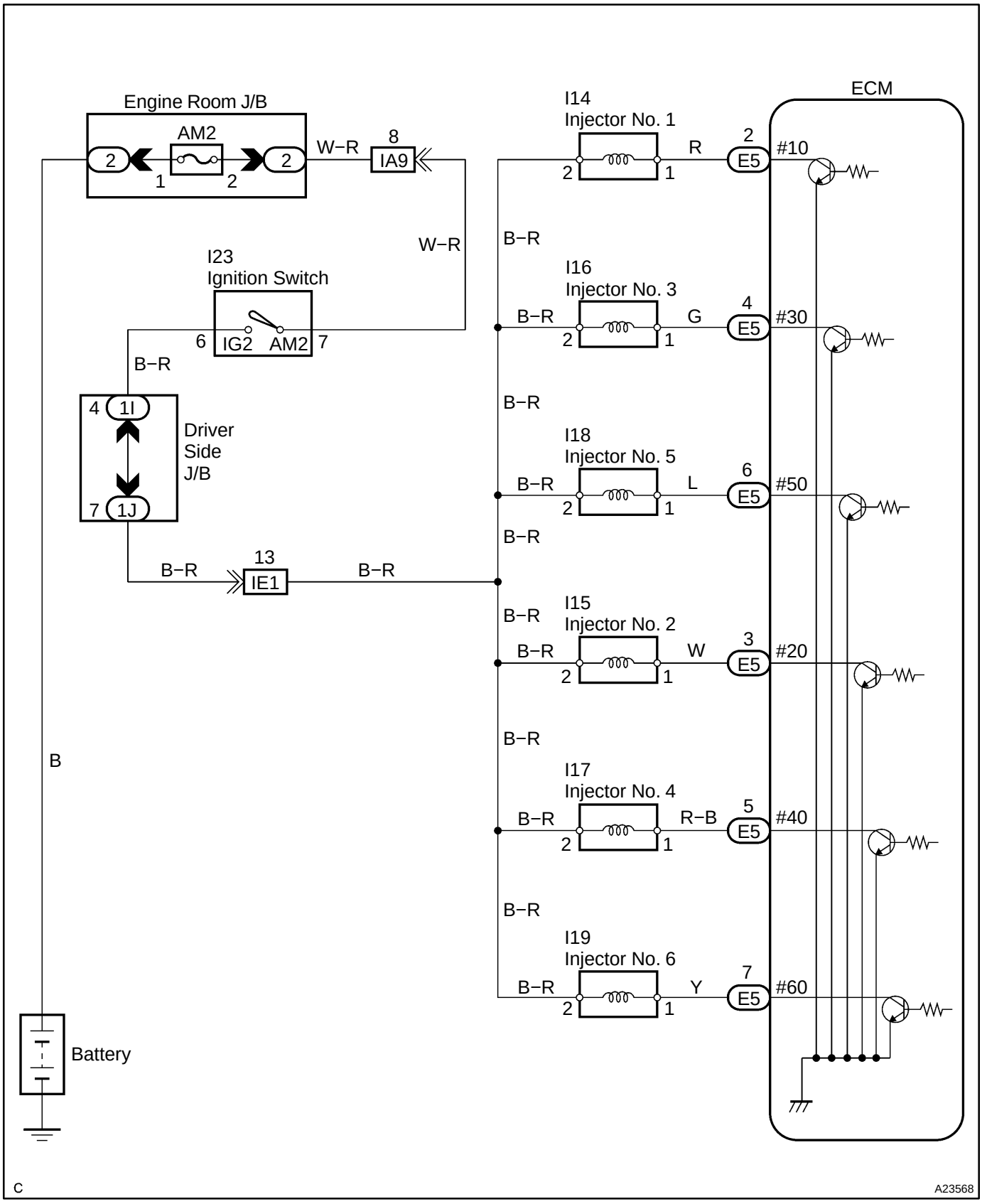

CONFIRMATION DRIVING PATTERN

(a) Connect the hand−held tester to the DLC3.
(b) Record DTC and the freeze frame data.
(c) Use the hand−held tester to set the check mode (See page DI−43).
(d) Read the value on the misfire counter for each cylinder when idling. If the value is displayed on the misfire counter, skip the following procedure of confirmation driving.
(e) Drive the vehicle several times with the engine speed, load and surrounding range shown as ENGINE SPD, CALC LOAD in the freeze frame data or MISFIRE RPM, MISFIRE LOAD in the DATA LIST.

If you have no hand−held tester, turn the ignition switch OFF after the symptom is simulated once. Then repeat the simulation process again.

HINT:

In order to memorize the DTC of misfire, it is necessary to drive around MISFIRE RPM, MISFIRE LOAD in the DATA LIST for the following period of time. Take care not to turn the ignition switch OFF. Turning the ignition switch OFF switches the diagnosis system from check mode to normal mode, and all DTCs, etc., are erased.

Engine Speed	Time
Idling	3 minutes 30 seconds or more
1,000 rpm	3 minutes or more
2,000 rpm	1 minute 30 seconds or more
3,000 rpm	1 minute or more

(f) Check if there is misfire, and the DTC and the freeze frame data. Record the DTC's, freeze frame data and misfire counter data.
(g) Turn the ignition switch OFF and wait for at least 5 seconds.

INSPECTION PROCEDURE

HINT:

- If DTCs besides misfire DTCs are memorized simultaneously, troubleshoot the non−misfire DTCs first.
- If the misfire does not occur when the vehicle is brought to the workshop, the misfire can be confirmed by reproducing the condition of the freeze frame data. Also, after finishing the repair, confirm that there is no misfire (See confirmation driving pattern).
- On 6 or 8 cylinder engines, misfiring cylinder identification is disabled at high engine speed and only a general misfire fault code P0300 is stored instead of a cylinder specific misfire fault code (P0301 to P0306).
  If the misfire starts in a high engine speed area or the misfire occurs only in a high engine speed area, only code P0300 may be stored.

When only a general misfire fault code like P0300 is stored:

- Erase the general misfire fault code using the hand−held tester
- Start the engine and drive the confirmation patten.
- Read the value of the misfire ratio for each cylinder. Or read the DTC.
- Repair the cylinder that has a high misfire ratio. Or repair the cylinder indicated by the DTC.
- After finishing repairs, drive the confirmation pattern again and confirm that no misfire occurs.
- When either of SHORT FT #1, LONG FT #1, SHORT FT #2 or LONG FT #2 in the freeze frame data is over the range of ±20 %, there is a possibility that the air−fuel ratio is becoming RICH (−20 % or less) or LEAN (+20 % or more).
- When COOLANT TEMP in the freeze frame data is less than 80°C (176°F), there is a possibility of misfire only during engine warm−up.
- If the misfire cannot be reproduced, the following reasons may apply: 1) the vehicle has low fuel, 2) improper fuel is being used, or 3) the ignition plug is contaminated.
- Be sure to check the value on the misfire counter after the repair.

1	**Are there any other codes (besides DTC P0300, P0301, P0302, P0303, P0304 P0305 or P0306) being output?**

PREPARATION:

(a) Connect the hand−held tester to the DLC3.
(b) Turn the ignition switch to ON and push the hand−held tester main switch ON.
(c) When using hand−held tester, enter the following menu: DIAGNOSIS / ENHANCED OBD II / DTC INFO / CURRENT CODES.

CHECK:

Read the DTCs using hand−held tester.

RESULT:

Display (DTC Output)	Proceed to
”P0300, P0301, P0302, P0303, P0304, P0305 and/or P0306”	A
”P0300, P0301, P0302, P0303, P0304, P0305 or P0306” and other DTCs	B

HINT:

If any other codes besides ”P0300, P0301, P0302, P0303, P0304, P0305 or P0306” are output, perform the troubleshooting for those DTCs.

B → **Go to DTC chart (See page DI−57).**

A

2	**Check wire harness, connector and vacuum hose in engine room.**

CHECK:

(a) Check the connection conditions of the wire harness and connector.
(b) Check for the disconnection and damaged of the vacuum hose.

NG → **Repair or replace, then confirm that there is no misfire (See confirmation driving pattern).**

OK

3	**Check connection of PCV hose.**

OK:

PCV hose is connected correctly and is not damaged.

NG → **Repair or replace PCV hose.**

OK

4	**Connect hand−held tester, and read the number of misfire.**

PREPARATION:

(a) Connect the hand−held tester to the DLC3.
(b) Turn the ignition switch to ON and push the hand−held tester main switch ON.
(c) Start the engine.
(d) When using hand−held tester, enter the following menu: DIAGNOSIS / ENHANCED OBD II / DATA LIST / ALL / CYL#1 to CYL#6.

CHECK:

Read the number of misfire on the hand−held tester.

HINT:

When a misfire is not reproduced, be sure to branch below based on the stored DTC.

RESULT:

High Misfire Rate Cylinder	Proceed to
1 or 2 cylinders	A
More than 3 cylinders	B

B → **Go to step 15.**

A

5	Check spark plug and spark of misfiring cylinder.

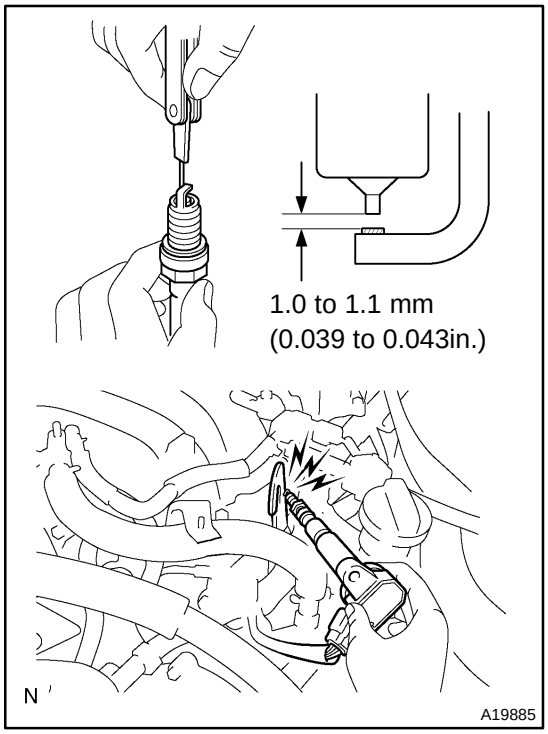

PREPARATION:

(a) Remove the ignition coil assembly.
(b) Remove the spark plug.

CHECK:

(a) Check the electrode for carbon deposits.
(b) Check the spark plug type (See page IG−1).
(c) Check electrode gap.

OK:

No large carbon deposit present.
Not wet with gasoline or oil.
Electrode gap: 1.0 to 1.1 mm (0.039 to 0.043 in.)

NOTICE:

If adjusting the gap of a new spark plug, bend only ”the base / ground” electrode. Do not touch the tip. Never attempt to adjust the gap of a used plug.

NG → **Replace spark plug.**

OK

6	**Change normal spark plug and check spark of misfiring cylinder.**

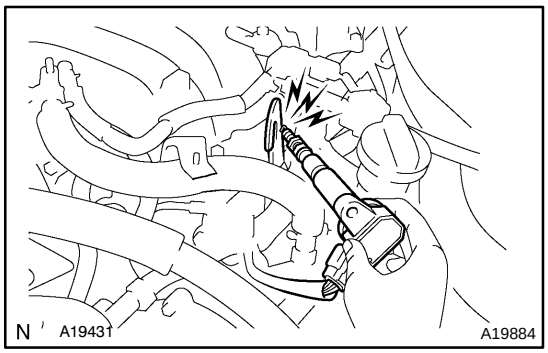

PREPARATION:

(a) Change to the normal spark plug.
  (1) Remove the spark plug that may be faulty from the ignition coil assembly.
  (2) Install another spark plug to the ignition coil assembly.

(b) Disconnect the injector connectors.

(c) Ground the spark plug.

CHECK:

Check if spark occurs while the engine is being cranked.

CAUTION:

Always disconnect each injector connector.

NOTICE:

Do not crank the engine for more than 2 seconds.

OK:

Spark jumps across electrode gap.

OK	**Go to step 8.**

NG

7	**Check for open and short in harness and connector between ignition coil and ECM.**

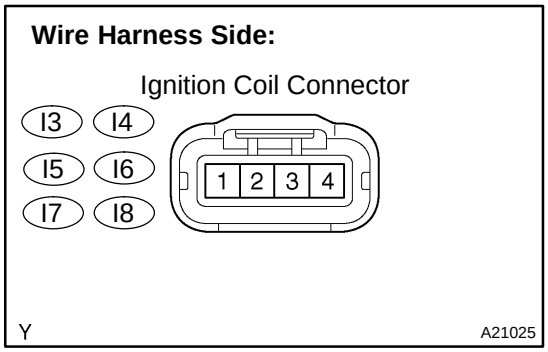

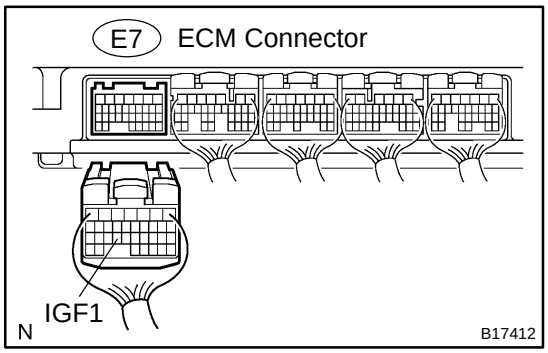

PREPARATION:

(a) Disconnect the I3, I4, I5, I6, I7 or I8 ignition coil connector.

(b) Disconnect the E7 ECM connector.

CHECK:

Check the resistance between the wire harness side connectors.

OK:

Standard:

Tester Connection	Specified Condition
Ignition coil (I3−2) − IGF1 (E7−24)	Below 1 Ω
Ignition coil (I4−2) − IGF1 (E7−24)	Below 1 Ω
Ignition coil (I5−2) − IGF1 (E7−24)	Below 1 Ω
Ignition coil (I6−2) − IGF1 (E7−24)	Below 1 Ω
Ignition coil (I7−2) − IGF1 (E7−24)	Below 1 Ω
Ignition coil (I8−2) − IGF1 (E7−24)	Below 1 Ω
Ignition coil (I3−2) or IGF1 (E7−24) − Body ground	10 kΩ or higher
Ignition coil (I4−2) or IGF1 (E7−24) − Body ground	10 kΩ or higher
Ignition coil (I5−2) or IGF1 (E7−24) − Body ground	10 kΩ or higher
Ignition coil (I6−2) or IGF1 (E7−24) − Body ground	10 kΩ or higher
Ignition coil (I7−2) or IGF1 (E7−24) − Body ground	10 kΩ or higher
Ignition coil (I8−2) or IGF1 (E7−24) − Body ground	10 kΩ or higher

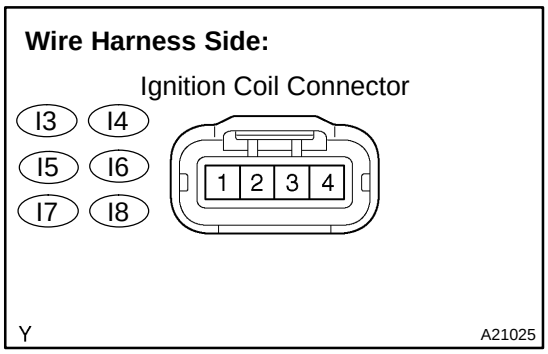

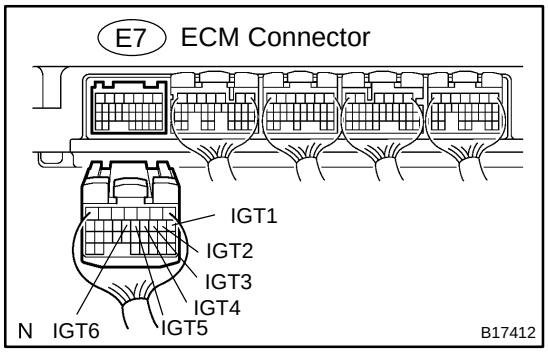

PREPARATION:

(a) Disconnect the I3, I4, I5, I6, I7 or I8 ignition coil connector.

(b) Disconnect the E7 ECM connector.

CHECK:

Check the resistance between the wire harness side connectors.

OK:

Standard:

Tester Connection	Specified Condition
Ignition coil (I3−3) − IGT1 (E7−8)	Below 1 Ω
Ignition coil (I4−3) − IGT2 (E7−9)	Below 1 Ω
Ignition coil (I5−3) − IGT3 (E7−10)	Below 1 Ω
Ignition coil (I6−3) − IGT4 (E7−11)	Below 1 Ω
Ignition coil (I7−3) − IGT5 (E7−12)	Below 1 Ω
Ignition coil (I8−3) − IGT6 (E7−13)	Below 1 Ω
Ignition coil (I3−3) or IGT1 (E7−8) − Body ground	10 kΩ or higher
Ignition coil (I4−3) or IGT2 (E7−9) − Body ground	10 kΩ or higher
Ignition coil (I5−3) or IGT3 (E7−10) − Body ground	10 kΩ or higher
Ignition coil (I6−3) or IGT4 (E7−11) − Body ground	10 kΩ or higher
Ignition coil (I7−3) or IGT5 (E7−12) − Body ground	10 kΩ or higher
Ignition coil (I8−3) or IGT6 (E7−13) − Body ground	10 kΩ or higher

OK → **Replace ignition coil with igniter, then confirm that there is no misfire.**

NG

Repair or replace harness or connector.

8	Check ECM terminal of misfiring cylinder.

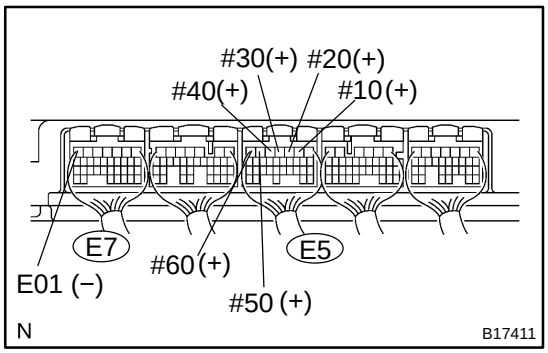

PREPARATION:

Turn the ignition switch to ON.

CHECK:

Measure the voltage between the terminals of the E5 and E7 ECM connectors.

OK:

Standard:

Tester Connection	Specified Condition
#10 (E5−2) − E01 (E7−7)	9 to 14 V
#20 (E5−3) − E01 (E7−7)	9 to 14 V
#30 (E5−4) − E01 (E7−7)	9 to 14 V
#40 (E5−5) − E01 (E7−7)	9 to 14 V
#50 (E5−6) − E01 (E7−7)	9 to 14 V
#60 (E5−7) − E01 (E7−7)	9 to 14 V

OK	Go to step 11.

NG

9	Check injector resistance of misfiring cylinder (See page SF−21).

NG	Replace injector.

OK

10	**Check for open and short in harness and connector between ignition SW and injector, injector and ECM of misfiring cylinder.**

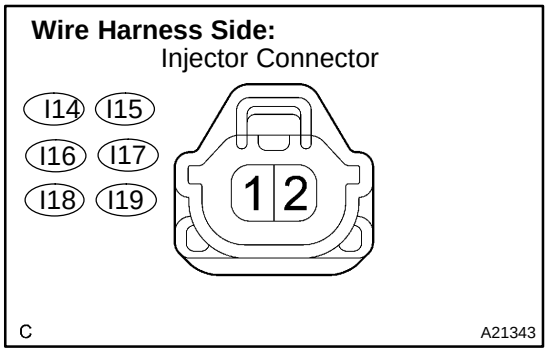

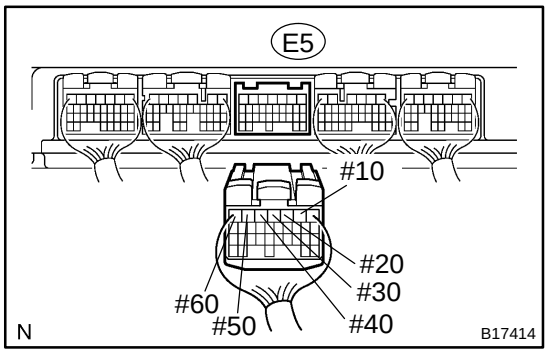

PREPARATION:

(a) Disconnect the I14, I15, I16, I17, I18 or I19 injector connector.

(b) Disconnect the E5 ECM connector.

CHECK:

Measure the resistance of the wire harness side connectors between the ECM and injector.

OK:

Standard:

Tester Connection	Specified Condition
Injector (I14−1) − #10 (E5−2)	Below 1 Ω
Injector (I15−1) − #20 (E5−3)	Below 1 Ω
Injector (I16−1) − #30 (E5−4)	Below 1 Ω
Injector (I17−1) − #40 (E5−5)	Below 1 Ω
Injector (I18−1) − #50 (E5−6)	Below 1 Ω
Injector (I19−1) − #60 (E5−7)	Below 1 Ω
Injector (I14−1) or #10 (E5−2) − Body ground	10 kΩ or higher
Injector (I15−1) or #20 (E5−3) − Body ground	10 kΩ or higher
Injector (I16−1) or #30 (E5−4) − Body ground	10 kΩ or higher
Injector (I17−1) or #40 (E5−5) − Body ground	10 kΩ or higher
Injector (I18−1) or #50 (E5−6) − Body ground	10 kΩ or higher
Injector (I19−1) or #60 (E5−7) − Body ground	10 kΩ or higher

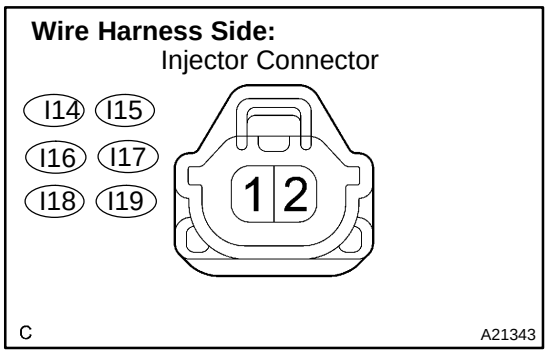

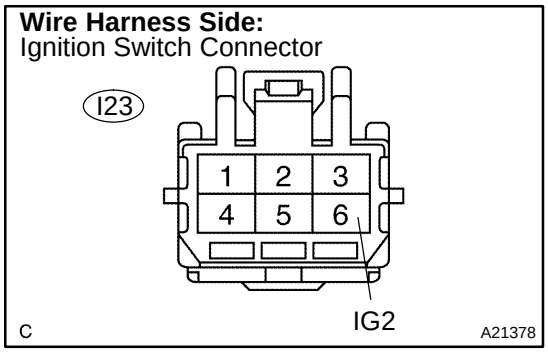

PREPARATION:

(a) Disconnect the I14, I15, I16, I17, I18 or I19 injector connector.

(b) Disconnect the I23 ignition switch connector.

CHECK:

Measure the resistance of the wire harness side connectors between the injector and ignition switch.

OK:

Standard:

Tester Connection	Specified Condition
Injector (I14−2) − IG2 (I23−6)	Below 1 Ω
Injector (I15−2) − IG2 (I23−6)	Below 1 Ω
Injector (I16−2) − IG2 (I23−6)	Below 1 Ω
Injector (I17−2) − IG2 (I23−6)	Below 1 Ω
Injector (I23−2) − IG2 (I23−6)	Below 1 Ω
Injector (I19−2) − IG2 (I23−6)	Below 1 Ω
Injector (I14−2) or IG2 (I23−6) − Body ground	10 kΩ or higher
Injector (I15−2) or IG2 (I23−6) − Body ground	10 kΩ or higher
Injector (I16−2) or IG2 (I23−6) − Body ground	10 kΩ or higher
Injector (I17−2) or IG2 (I23−6) − Body ground	10 kΩ or higher
Injector (I18−2) or IG2 (I23−6) − Body ground	10 kΩ or higher
Injector (I19−2) or IG2 (I23−6) − Body ground	10 kΩ or higher

NG → **Repair or replace harness or connector.**

OK

11	**Check injector injection of misfiring cylinder (See page SF−26).**

NG → **Replace injector.**

OK

12	Check compression pressure of misfiring cylinder (See page EM−3).

NG → Repair or replace.

OK

13	Check valve clearance of misfiring cylinder (See page EM−4).

NG → Adjust valve clearance.

OK

14	Check result of step 4, and proceed to each step.

RESULT:

High misfire rate cylinder	Proceed to
1 or 2 cylinders	A
More than 3 cylinders	B

B → Check for intermittent problems (See page DI−11).

A

15	Check valve timing (Check for looseness or a jumped tooth of timing chain) (See page EM−44).

NG → Adjust valve timing (Repair or replace timing belt).

OK

16	**Check fuel pressure (See page SF−5).**

NG → **Check and replace fuel pump, pressure regulator, fuel pipe line and filter (See page SF−1).**

OK

17	**Check intake air temperature and mass air flow rate.**

PREPARATION:

(a) Connect the hand−held tester to the DLC3.

(b) Turn the ignition switch to ON.

CHECK:

Check the intake air temperature.

(1) When using hand−held tester, enter the following menu: DIAGNOSIS / ENHANCED OBD II / DATA LIST / ALL / INTAKE AIR.

(2) Read its value displayed on the hand−held tester.

OK:

Equivalent to ambient temperature

CHECK:

Check the air flow rate.

(1) When using hand−held tester, enter the following menu: DIAGNOSIS/ENHANCED OBD II/DATA LIST/ALL/MAF.

(2) Read its value displayed on the hand−held tester.

OK:

Condition	Air Flow Rate (g/s)
Ignition switch ON (do not start engine)	0
Idling	4 to 6
Running without load (2,500 rpm)	13 to 20
Idling to quickly accelerating	Air flow rate fluctuates

NG → **Replace mass air flow meter.**

OK

18	Check engine coolant temperature sensor.

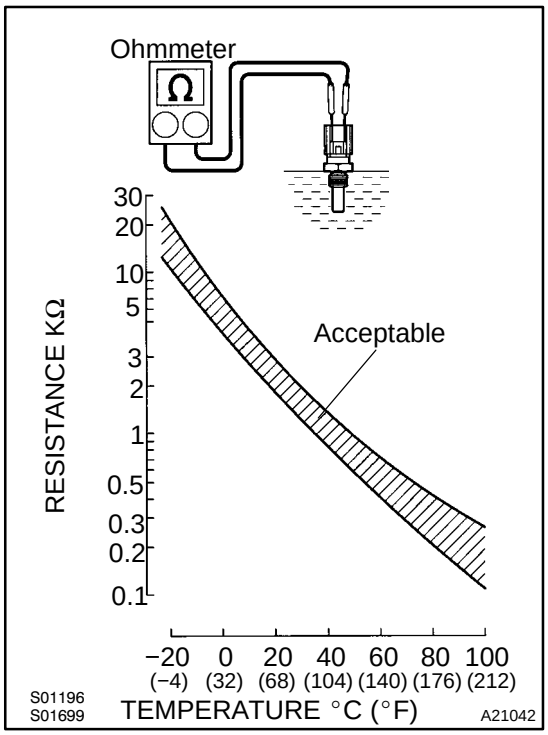

PREPARATION:

Remove the engine coolant temperature sensor.

CHECK:

Measure the resistance between the terminals of the engine coolant temperature sensor.

Resistance:

Tester Connection	Specified Condition
1 − 2	2.32 to 2.59 kΩ (20°C (68°F))
1 − 2	0.310 to 0.326 kΩ (80°C (176°F))

NOTICE:

In case of checking the engine coolant temperature sensor in the water, be careful not to allow water to go into the terminals. After checking, dry the sensor.

HINT:

Alternate procedure: Connect an ohmmeter to the installed engine coolant temperature sensor and read the resistance. Use an infrared thermometer to measure the engine temperature in the immediate vicinity of the sensor. Compare these values to the resistance/temperature graph. Change the engine temperature (by warming up or cooling down) and repeat the test.

NG → **Replace engine coolant temperature sensor.**

OK

19	Check result of step 4, and proceed to each step.

High misfire rate cylinder	Proceed to
1 or 2 cylinders	A
More than 3 cylinders	B

B → **Go to step 5.**

A

Check for intermittent problems (See page DI−11).

DIDUJ−01

DTC	P0327	Knock Sensor 1 Circuit Low Input (Bank 1 or Single Sensor)

DTC	P0328	Knock Sensor 1 Circuit High Input (Bank 1 or Single Sensor)

DTC	P0332	Knock Sensor 2 Circuit Low Input (Bank 2)

DTC	P0333	Knock Sensor 2 Circuit High Input (Bank 2)

CIRCUIT DESCRIPTION

A flat type knock sensor (non−resonant type) has the structure that can detect the vibration in a wider band of frequency from about 6 kHz to 15 kHz and has the following features.
Knock sensors are fitted on the right bank and left bank of the cylinder block to detect engine knocking. Each knock sensor contains a piezoelectric element which generates voltage when it becomes deformed. Generation of the voltage occurs when the cylinder block vibrates due to knocking. If engine knocking occurs, the ignition timing is retarded in order to suppress the knocking.

DTC No.	DTC Detection Condition	Trouble Area
P0327 P0332	Output voltage of the knock sensor 1 or 2 is 0.5 V or less	• Short in knock sensor 1 or 2 circuit • Knock sensor 1 or 2 • ECM
P0328 P0333	Output voltage of the knock sensor 1 or 2 is 4.5 V or more	• Open in knock sensor 1 or 2 circuit • Knock sensor 1 or 2 • ECM

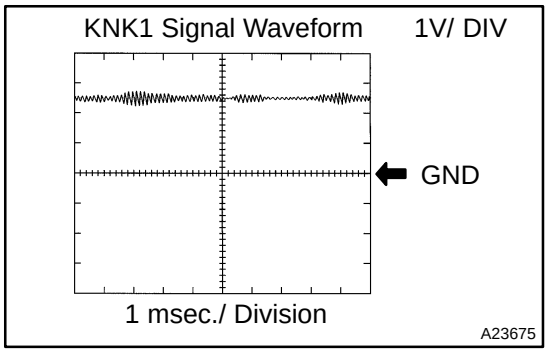

Reference: Inspection using the oscilloscope.
The correct waveform is as shown.

Item	Details
Terminal	KNK1 − EKNK or KNK2 − EKN2
Equipment Settings	0.01 to 10 V/Division, 0.01 to 10 msec./Division
Condition	After warming up the engine, keep the engine speed at 4,000 rpm.

MONITOR DESCRIPTION

The knock sensor located on the cylinder block detects spark knock.
When spark knock occurs, the sensor pick−up vibrates in a specific frequency range. When the ECM detects the voltage in this frequency range, it retards the ignition timing to suppress the spark knock.
If there is a defect in the knock sensor or an open or short circuit, the voltage level will deviate outside the normal operating range. The ECM interprets this deviation as a defect in the knock sensor and sets a DTC.
Example:
When the knock sensor voltage output is less than 0.5 V, or more than 4.5 V, and if either the condition continues for more than 3 sec.

MONITOR STRATEGY

Related DTCs	P0327	Knock sensor (Bank 1) range check (Low voltage)
	P0328	Knock sensor (Bank 1) range check (High voltage)
	P0332	Knock sensor (Bank 2) range check (Low voltage)
	P0333	Knock sensor (Bank 2) range check (High voltage)
Required sensors/components	Main sensors/components	Knock sensor
	Related sensors/components	Crankshaft position sensor, Camshaft position sensor, Engine coolant temperature sensor, Mass air flow meter
Frequency of operation	Continuous	
Duration	1 sec.	
MIL operation	Immediate	
Sequence of operation	None	

TYPICAL ENABLING CONDITIONS

Item	Specification	
	Minimum	Maximum
The monitor will run whenever these DTCs are not present	See page DI−18	
Battery voltage	10.5 V	−
Time after engine start	5 sec.	−
Ignition switch	ON	
Starter	OFF	

TYPICAL MALFUNCTION THRESHOLDS

Detection Criteria	Threshold
Knock sensor range check (Low voltage) P0327, P0332:	
Knock sensor voltage	Less than 0.5 V
Knock sensor range check (High voltage) P0328, P0333:	
Knock sensor voltage	More than 4.5 V

WIRING DIAGRAM

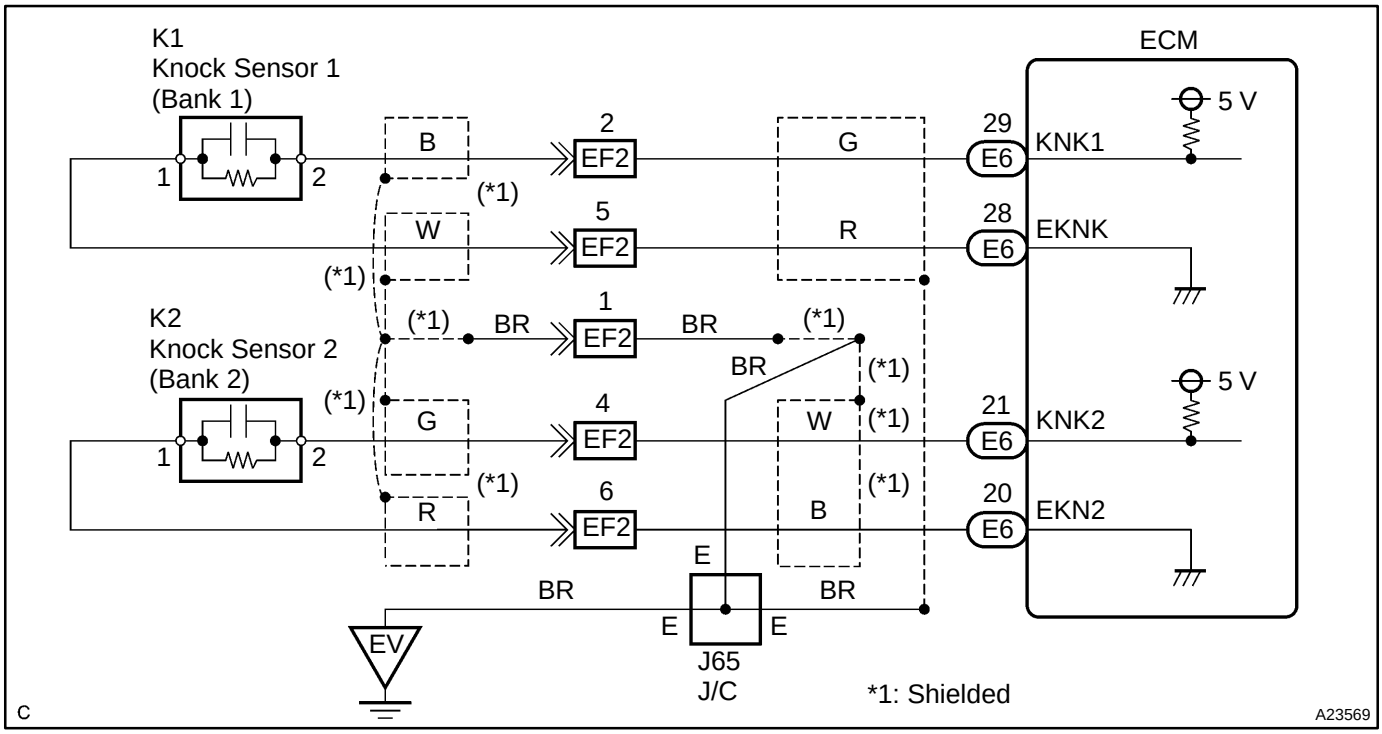

INSPECTION PROCEDURE

HINT:

- DTC P0327 and P0328 are for the bank 1 knock sensor circuit.
- DTC P0332 and P0333 are for the bank 2 knock sensor circuit.
- Read freeze frame data using the hand−held tester. Freeze frame data records the engine conditions when a malfunction is detected. When troubleshooting, freeze frame data can help determine if the vehicle was running or stopped, if the engine was warmed up or not, if the air−fuel ratio was lean or rich, and other data from the time the malfunction occurred.

1	Connect hand−held tester, and check knock sensor circuit.

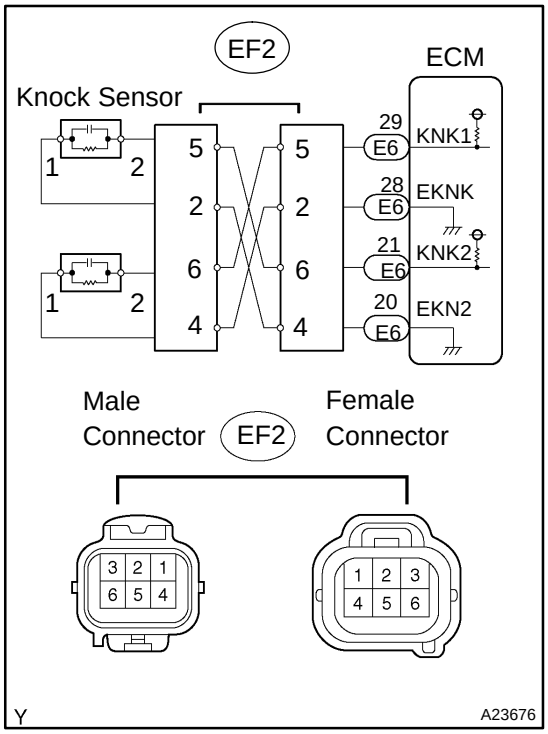

PREPARATION:

(a) Disconnect the EF2 connector.

(b) Using lead wires, connect the EF2 connectors as follows.

Male Connector − Female Connector
Terminal 5 − Terminal 6
Terminal 2 − Terminal 4
Terminal 6 − Terminal 5
Terminal 4 − Terminal 2

(c) Warm up the engine.

(d) Run the engine at 3,000 rpm for 10 seconds or more.

CHECK:

(a) Connect the hand−held tester to the DLC3.

(b) Turn the ignition switch to ON and turn the hand−held tester ON.

(c) Select the item: DIAGNOSIS / ENHANCED OBD II / DTC INFO / CURRENT CODES.

(d) Read DTCs.

Result :

Display	Proceed to
DTCs same as when vehicle brought in P0327, P0328 → P0327, P0328 or P0332, P0333 → P0332, P0333	A
DTCs different from when vehicle brought in P0327, P0328 → P0332, P0333 or P0332, P0333 → P0327, P0328	B

(e) Reconnect the EF2 connector.

B	Go to step 4.

A

2	**Check for open and short in harness and connector between EF2 connector and ECM (See page IN−30).**

NG → **Repair or replace harness or connector.**

OK

3	**Measure voltage between terminals KNK1 and EKNK, KNK2 and EKN2 of ECM.**

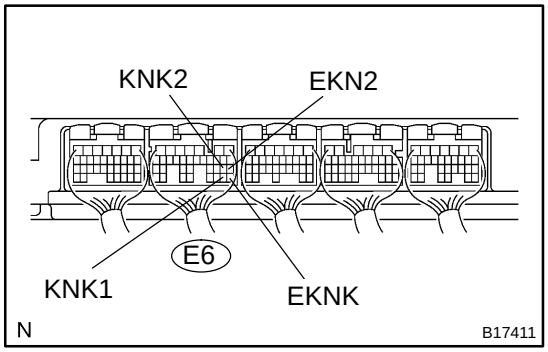

PREPARATION:

(a) Disconnect the E6 ECM connector.

(b) Turn the ignition switch to ON.

CHECK:

Measure the voltage between the specified ECM terminals.

OK:

Standard:

Tester Connection	Specified Condition
KNK1 (E6−29) − EKNK (E6−28)	4.5 to 5.5 V
KNK2 (E6−21) − EKN2 (E6−20)	4.5 to 5.5 V

(a) Reconnect the ECM connector.

NG → **Replace ECM (See page SF−66).**

OK

Check for intermittent problems (See page DI−11).

4	Check knock sensor.

Wire Harness Side:

Male Connector

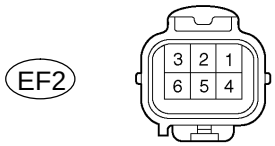

Front View

Y A23674

PREPARATION:

Disconnect the EF2 connector.

CHECK:

(a) Check the resistance between the terminals of the EF2 male connector.

OK:

Standard:

Tester Connection	Specified Condition
EF2 male connector 2 −5	120 to 280 kΩ
EF2 male connector 4 − 6	120 to 280 kΩ

(b) Reconnect the EF2 connector.

OK → **Check for intermittent problems (See page DI−11).**

NG

5	Check for open and short in harness and connector between EF2 connector and knock sensor (See page IN−30).

HINT:

- If DTC P0327 or P0328 has changed to P0332 or P0333, check the knock sensor circuit on the right bank side.
- If DTC P0332 or P0333 has changed to P0327 or P0328, check the knock sensor circuit on the left bank side.

NG → **Repair or replace harness or connector.**

OK

Replace knock sensor.

DIDTL−01

DTC	P0335	Crankshaft Position Sensor ”A” Circuit

DTC	P0339	Crankshaft Position Sensor ”A” Circuit Intermittent

CIRCUIT DESCRIPTION

The crankshaft position sensor system consists of a crankshaft position sensor plate and a pick−up coil. The sensor plate has 34 teeth and is installed on the crankshaft. The pick−up coil is made of an iron core and magnet. The sensor plate rotates and as each tooth passes through the pick−up coil, a pulse signal is created. The pick−up coil generates 34 signals for each engine revolution. Based on these signals, the ECM calculates the crankshaft position and engine RPM. Using these calculations, the fuel injection time and ignition timing are controlled.

DTC No.	DTC Detecting Condition	Trouble Area
P0335	No crankshaft position sensor signal to ECM with engine speed 600 rpm or more (1 trip detection logic)	• Open or short in crankshaft position sensor circuit • Crankshaft position sensor • Signal plate • ECM
P0339	In condition (a), (b) and (c), when no crankshaft position sensor (NE) signal is input for 0.05 sec. or more. : (1 trip detection logic) (c) Engine revolution 1,000 rpm or more (d) STA signal is OFF (e) 3 sec. or more has lapsed after STA signal is switched from ON to OFF.	• Open or short in crankshaft position sensor circuit • Crankshaft position sensor • Signal plate • ECM

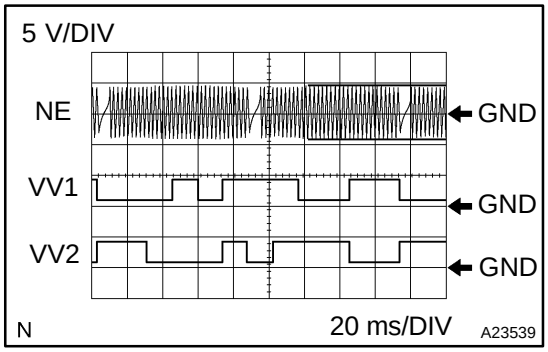

Reference: Inspection using the oscilloscope.

The correct waveform is as shown in the illustration.

Tester Connection	Specified Condition
VV1+ (E5−19) − VV1− (E5−29)	Correct waveform is as shown
VV2+ (E5−18) − VV2− (E5−28)	
NE+ (E5−21) − NE− (E5−20)	

MONITOR DESCRIPTION

If there are no signals from the crankshaft sensor even though the engine is revolving, the ECM interprets this as a malfunction of the sensor.

MONITOR STRATEGY

Related DTCs	P0335	Crankshaft position sensor range check or rationality
Required sensors/components	Main sensors/components	Crankshaft position sensor
	Related sensors/components	Engine speed sensor
Frequency of operation	Continuous	
Duration	Case 1: 0.016 sec. Case 2: 3 times	
MIL operation	Immediate	
Sequence of operation	None	

TYPICAL ENABLING CONDITIONS

Item	Specification	
	Minimum	Maximum
The monitor will run whenever this DTC is not present	See page DI−18	
Case 1:		
Engine speed	600 rpm	−
Starter	OFF	
Time after starter ON to OFF	3 sec.	−
Case 2:		
Time after starter ON to OFF	0.3 sec.	−
Number of camshaft position sensor signal pulse	6	−
Ignition switch	ON	
Battery voltage	7 V	−
Camshaft position sensor circuit fail	Not detected	

TYPICAL MALFUNCTION THRESHOLDS

Detection Criteria	Threshold
Case 1:	
Engine speed signal	No signal
Case 2:	
Number of crankshaft position sensor signal pulse	132 or less, or 174 or more

WIRING DIAGRAM

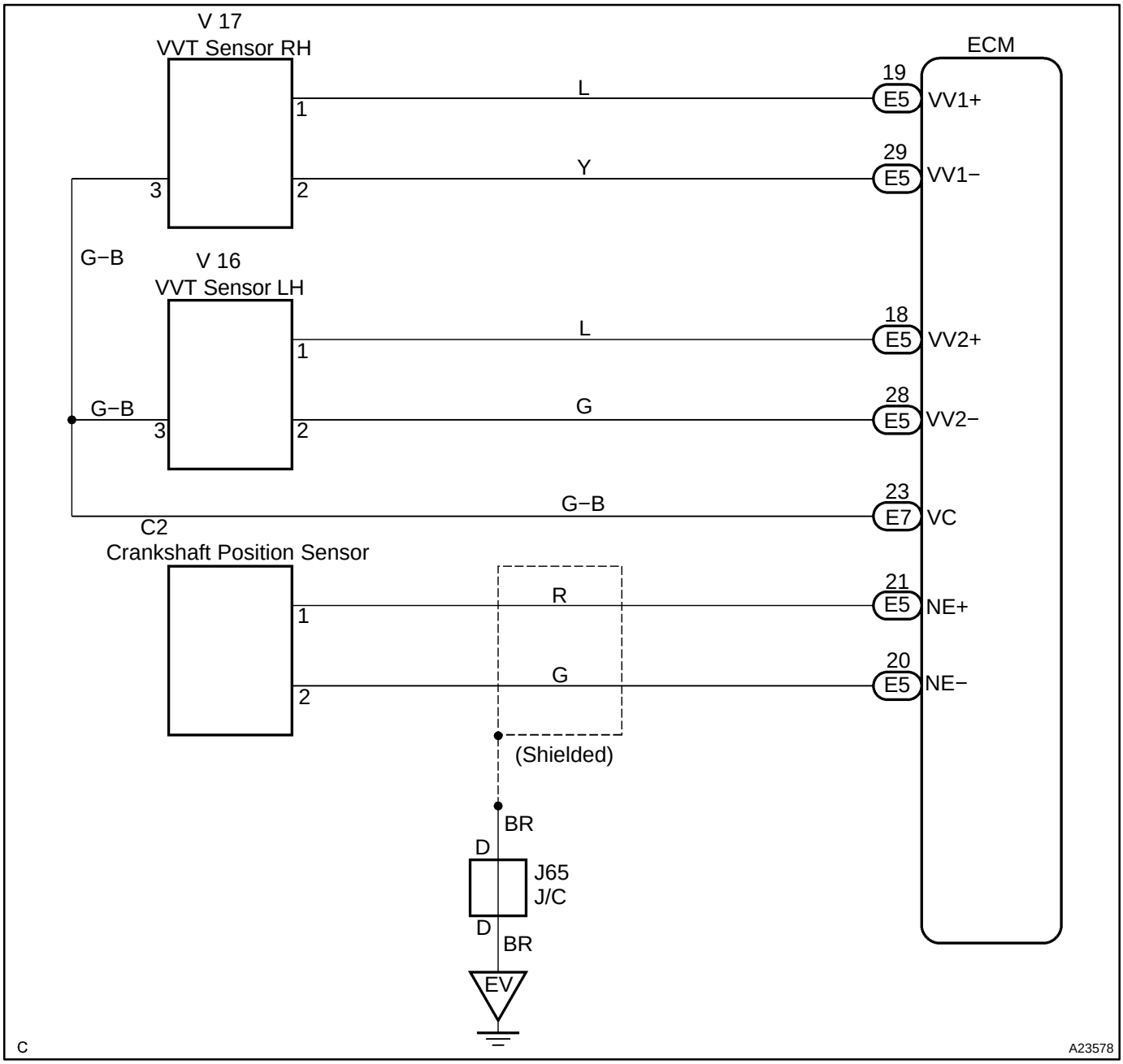

INSPECTION PROCEDURE

HINT:

- Read freeze frame data using the hand−held tester. Freeze frame records the engine conditions when a malfunction is detected. When troubleshooting it is useful for determining whether the vehicle was running or stopped. the engine was warmed up or not, the air−fuel ratio lean or rich, etc. at the time of the malfunction.
- READ VALUE ON HAND−HELD TESTER

(a) Connect the hand−held tester to the DLC3.
(b) Start the engine and push the hand−held tester tool main switch ON.
(c) When using hand−held tester, enter the following menu: ”DIAGNOSIS / ENHANCED OBD II / DATA LIST / ALL / ENGINE SPD”.

- The engine speed can be confirmed in DATA LIST using the hand−held tester. If there are no NE signals from the crankshaft position sensor despite the engine revolving, the engine speed will be indicated as zero. If voltage output of the crankshaft position sensor is insufficient, the engine speed will be indicated as lower RPM (than the actual RPM).

1	**Check resistance of crankshaft position sensor.**

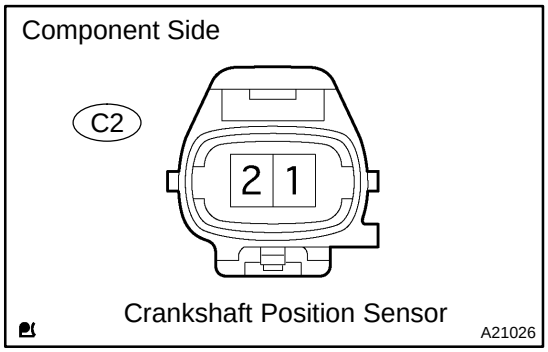

PREPARATION:

Disconnect the C2 crankshaft position sensor connector.

CHECK:

Measure the resistance between terminals 1 and 2.

OK:

Standard:

Tester Connection	Specified Condition
1 − 2	985 to 1,600 Ω at cold
1 − 2	1,265 to 1,890 Ω at hot

NOTICE:

” Cold” and ”Hot” shown above mean the temperature of the coils themselves. ”Cold” is form −10˚C (14˚F) to 50˚C (122˚F) and ”Hot” is from 50˚C (122˚F) to 100˚C (212˚F).

NG → **Replace crankshaft position sensor.**

OK

2	**Check for open and short in harness and connector between ECM and crankshaft position sensor.**

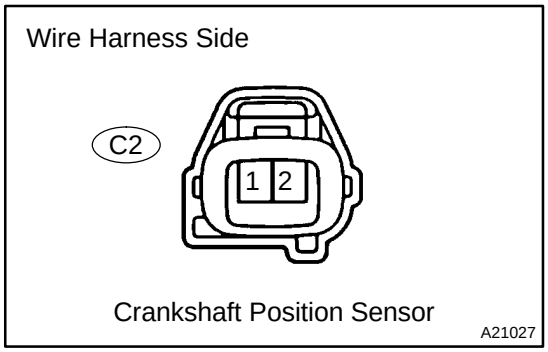

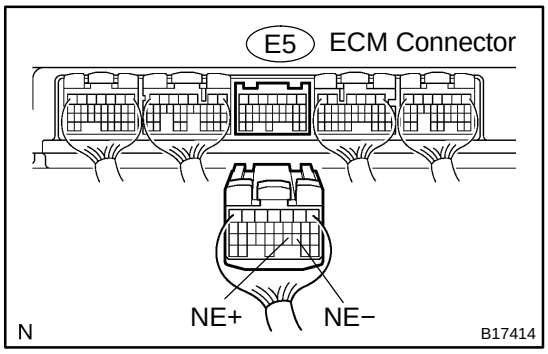

PREPARATION:

(a) Disconnect the C2 crankshaft position sensor connector.

(b) Disconnect the E5 ECM connector.

CHECK:

Measure the resistance between the wire harness side connectors.

OK:

Standard:

Tester Connection	Specified Condition
Crankshaft position sensor (C2−1) − NE+ (E5−21)	Below 1 Ω
Crankshaft position sensor (C2−2) − NE− (E5−20)	Below 1 Ω
Crankshaft position sensor (C2−1) or NE+ (E5−21) − Body ground	10 kΩ or higher
Crankshaft position sensor (C2−2) or NE− (E5−20) − Body ground	10 kΩ or higher

NG	**Repair or replace harness or connector.**

OK

3	**Check sensor installation (crankshaft position sensor).**

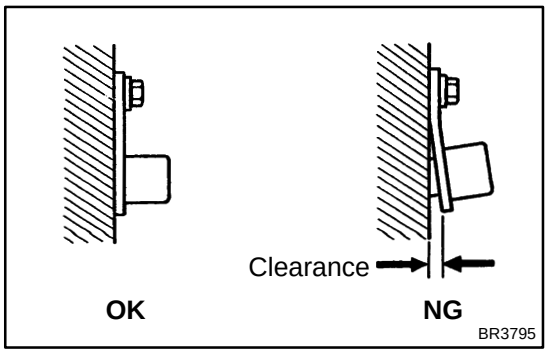

CHECK:

Check the crankshaft position sensor installation.

OK:

The crankshaft position sensor is installed properly.

NG	**Tighten sensor installation bolt.**

OK

4	**Inspect teeth of sensor plate.**

PREPARATION:
Remove the crankshaft angle sensor plate (See page EM−111).
CHECK:
Check the teeth of sensor plate.

NG → **Replace sensor plate.**

OK

Replace ECM (See page SF−66).

DIDTM−01

DTC	P0340	Camshaft Position Sensor ”A” Circuit (Bank 1 or Single Sensor)

DTC	P0342	Camshaft Position Sensor ”A” Circuit Low Input (Bank 1 or Single Sensor)

DTC	P0343	Camshaft Position Sensor ”A” Circuit High Input (Bank 1 or Single Sensor)

DTC	P0345	Camshaft Position Sensor ”A” Circuit (Bank 2)

DTC	P0347	Camshaft Position Sensor ”A” Circuit Low Input (Bank 2)

DTC	P0348	Camshaft Position Sensor ”A” Circuit High Input (Bank 2)

CIRCUIT DESCRIPTION

The camshaft position sensor (G signal) consists of a magnet and MRE element.
The camshaft drive gear has 5 teeth on its inner circumference. When the camshaft gear rotates, air gap changes between the protrusion on the gear and the pickup coil. The change affects the magnetic field and result in change in the resistance of the MRE element. The crankshaft angle sensor plate has 32 teeth and output 32 signals every engine revolution. The ECM detects the standard crankshaft angle based on the G signal and actual crankshaft angle and engine speed by NE signal.

DTC No.	DTC Detection Condition	Trouble Area
P0340 P0345	No camshaft position sensor signal to ECM during cranking for 4 seconds or more. (2 trip detection logic)	• Open or short in camshaft position sensor circuit • Camshaft position sensor • Camshaft timing pulley • Jumping teeth of timing belt • ECM
P0340 P0345	No camshaft position sensor signal to ECM at engine speed 600 rpm or more for 5 seconds or more. (1 trip detection logic)	• Open or short in camshaft position sensor circuit • Camshaft position sensor • Camshaft timing pulley • Jumping teeth of timing belt • ECM

P0340 P0345	Input voltage to ECM remains 0.3 V or less, or 4.7 V or higher for more than 5 seconds, when 2 or more seconds have elapsed after turning the ignition switch ON. (1 trip detection logic)	• Open or short in camshaft position sensor circuit • Camshaft position sensor • Camshaft timing pulley • Jumping teeth of timing belt • ECM
P0342 P0347	Input voltage to ECM remains 0.3 V or less for more than 5 seconds, when 2 or more seconds have elapsed after turning the ignition switch ON. (1 trip detection logic)	• Open or short in camshaft position sensor circuit • Camshaft position sensor • Camshaft timing pulley • Jumping teeth of timing belt • ECM
P0343 P0348	Input voltage to ECM remains 4.7 V or higher for more than 5 seconds, when 2 or more seconds have elapsed after turning the ignition switch ON. (1 trip detection logic)	• Open or short in camshaft position sensor circuit • Camshaft position sensor • Camshaft timing pulley • Jumping teeth of timing belt • ECM

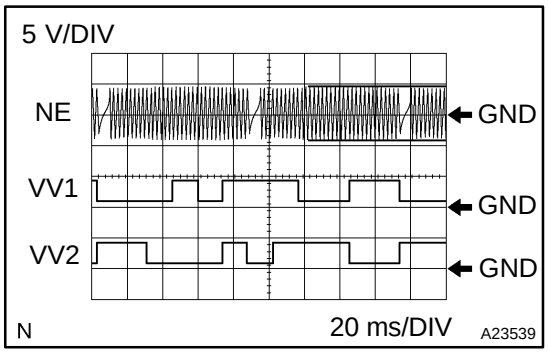

Inspection using the oscilloscope.

The correct waveform is as shown in the illustration.

Tester Connection	Specified Condition
VV1+ (E5−25) − VV1− (E5−24)	Correct waveform is as shown
VV2+ (E5−18) − VV2− (E5−28)	Correct waveform is as shown
NE+ (E5−21) − NE− (E5−20)	Correct waveform is as shown

MONITOR DESCRIPTION

If there are no signals from the camshaft position sensor even though the engine is turning, or if the rotation of the camshaft and the crankshaft is not synchronized, the ECM interprets this as a malfunction of the sensor.

MONITOR STRATEGY

Related DTCs	P0340	Camshaft position sensor range check
		Camshaft position/crankshaft position misalignment
		Camshaft position sensor range check (Fluctuating)
	P0342	Camshaft position sensor range check (Low voltage)
	P0343	Camshaft position sensor range check (High voltage)
	P0345	VVT sensor range check (While starting engine)
		VVT sensor range check (After starting engine)
		VVT sensor range check (Fluctuating)
	P0347	VVT sensor range check (Low voltage)
	P0348	VVT sensor range check (High voltage)
Required sensors/components	Main sensors/components	VVT sensor, Camshaft position sensor
	Related sensors/components	Crankshaft position sensor, Engine speed sensor
Frequency of operation	Continuous	
Duration	4 sec.: P0340 (Camshaft position sensor range check), P0345 (VVT sensor range check (While starting engine)) 5 sec.: Others	
MIL operation	2 driving cycles: P0340 (Camshaft position sensor range check), P0345 (VVT sensor range check (While starting engine)) Immediate: Others	
Sequence of operation	None	

TYPICAL ENABLING CONDITIONS

Item	Specification	
	Minimum	Maximum
The monitor will run whenever these DTCs are not present	See page DI−18	
Camshaft position sensor range check:		
Starter	ON and not starter ON again	
Minimum battery voltage while starter ON	−	11 V
Camshaft position/crankshaft position misalignment:		
Engine RPM	600 rpm	−
Starter	OFF	
Camshaft position sensor range check (Fluctuating, Low voltage, High voltage):		
Starter	OFF	
Ignition switch ON and time after ignition switch is OFF to ON	2 sec.	−
VVT sensor range check (While starting engine):		
Starter	ON	
Battery voltage while starter ON once at least	−	11 V

VVT sensor range check (After starting engine):		
Engine RPM	600 rpm	−
Battery voltage	8 V	−
Ignition switch	ON	
Starter	OFF	
VVT sensor range check (Fluctuating, Low voltage, High voltage):		
Starter	OFF	
Ignition switch ON and time after ignition switch is OFF to ON	2 sec.	−
Battery voltage	8 V	−

TYPICAL MALFUNCTION THRESHOLDS

Detection Criteria	Threshold
Camshaft position sensor range check:	
Camshaft position sensor signal	No signal
Camshaft position/crankshaft position misalignment:	
Camshaft position and crankshaft position phase	Mis−aligned
Camshaft position sensor range check (Fluctuating):	
Camshaft position sensor voltage	Less than 0.3 V, or more than 4.7 V
Camshaft position sensor range check (Low voltage):	
Camshaft position sensor voltage	Less than 0.3 V
Camshaft position sensor range check (High voltage):	
Camshaft position sensor voltage	More than 4.7 V
VVT sensor range check (While starting engine):	
VVT sensor signal	No signal
VVT sensor range check (After starting engine):	
VVT sensor signal	No signal
VVT sensor range check (Fluctuating):	
VVT sensor voltage	Less than 0.3 V, or more than 4.7 V
VVT sensor range check (Low voltage):	
VVT sensor voltage	Less than 0.3 V
VVT sensor range check (High voltage):	
VVT sensor voltage	More than 4.7 V

WIRING DIAGRAM

Refer to DTC P0335 on page DI−203.

INSPECTION PROCEDURE

HINT:

Read freeze frame data using the hand−held tester. Freeze frame data records the engine conditions when a malfunction is detected. When troubleshooting, freeze frame data can help determine if the vehicle was running or stopped, if the engine was warmed up or not, if the air−fuel ratio was lean or rich, as well as other data from the time when a malfunction occurred.

1	**Check camshaft position sensor power source.**

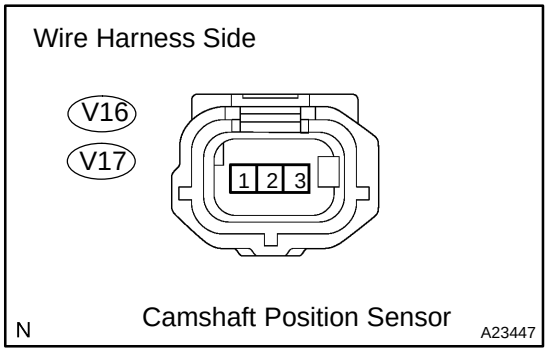

PREPARATION:

Disconnect the camshaft position sensor connector.

CHECK:

Measure the voltage between terminal 3 of the camshaft position sensor wire harness side connector and body ground.

OK:

Standard:

4.5 to 5.5 V

NG → **Check and repair harness and connector.**

OK

2	**Check signal of camshaft position sensor.**

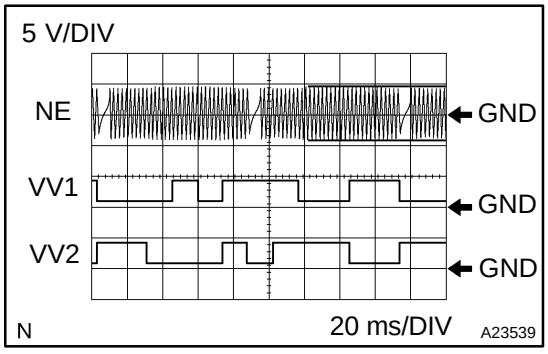

PREPARATION:

Start the engine.

CHECK:

Using oscilloscope, measure the signal waveform between terminal 3 of the camshaft position sensor and body ground.

OK:

Standard:

Tester Connection	Specified Condition
VV1+ (E5−19) − VV1− (E5−29)	Correct waveform is as shown
VV2+ (E5−18) − VV2− (E5−28)	Correct waveform is as shown
NE+ (E5−21) − NE− (E5−20)	Correct waveform is as shown

OK → **Replace ECM (See page SF−66).**

NG

3	Check for open and short in harness and connector between ECM and camshaft position sensor.

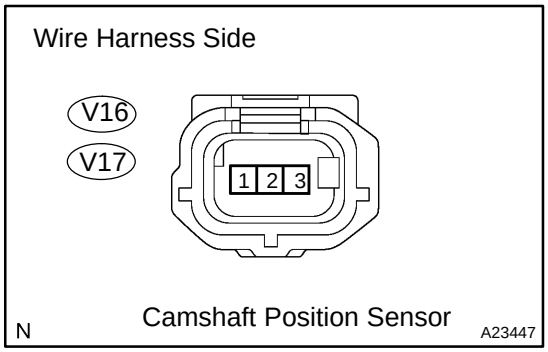

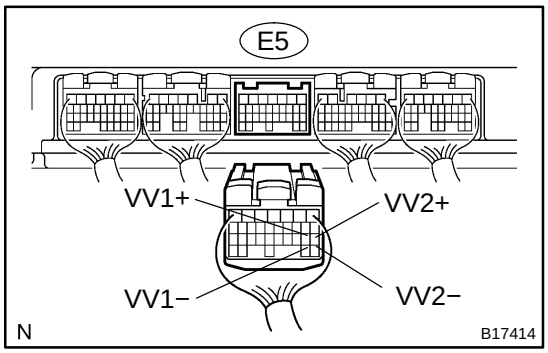

PREPARATION:

(a) Disconnect the camshaft position sensor connector.

(b) Disconnect the E5 ECM connector.

CHECK:

Measure the resistance between the wire harness side connectors.

OK:

Standard:

Tester Connection	Specified Condition
Camshaft position sensor (V17−1) − VV1+ (E5−19)	Below 1 Ω
Camshaft position sensor (V17−2) − VV1− (E5−29)	Below 1 Ω
Camshaft position sensor (V16−1) − VV2+ (E5−18)	Below 1 Ω
Camshaft position sensor (V16−2) − VV2− (E5−28)	Below 1 Ω
Camshaft position sensor (V17−1) or VV1+ (E5−19) − Body ground	10 kΩ or higher
Camshaft position sensor (V16−2) or VV1− (E5−29) − Body ground	10 kΩ or higher
Camshaft position sensor (V16−1) or VV2+ (E5−18) − Body ground	10 kΩ or higher
Camshaft position sensor (V16−2) or VV2− (E5−28) − Body ground	10 kΩ or higher

NG → **Repair or replace harness or connector.**

OK ↓

4	Check sensor installation (Camshaft position sensor).

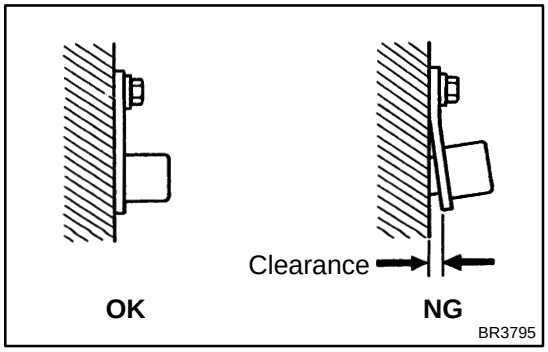

CHECK:

Check the VVT position sensor installation.

OK:

The VVT sensor is installed properly.

NG → **Tighten sensor installation bolt.**

OK ↓

5	**Inspect teeth of camshaft timing belt pulley.**

PREPARATION:
Remove the camshaft timing belt pulley (See page EM−53).
CHECK:
Check the camshaft timing belt pulley.

NG → **Replace camshaft timing pulley.**

OK

Replace Camshaft position sensor (See page IG−11).

DIDTN−01

DTC	**P0351**	**Igniter Coil ”A” Primary/Secondary Circuit**

DTC	**P0352**	**Igniter Coil ”B” Primary/Secondary Circuit**

DTC	**P0353**	**Igniter Coil ”C” Primary/Secondary Circuit**

DTC	**P0354**	**Igniter Coil ”D” Primary/Secondary Circuit**

DTC	**P0355**	**Igniter Coil ”E” Primary/Secondary Circuit**

DTC	**P0356**	**Igniter Coil ”F” Primary/Secondary Circuit**

HINT:

- These DTCs indicate a malfunction related to primary circuit.
- If DTC P0351 is displayed, check No. 1 ignition coil with igniter circuit.
- If DTC P0352 is displayed, check No. 2 ignition coil with igniter circuit.
- If DTC P0353 is displayed, check No. 3 ignition coil with igniter circuit.
- If DTC P0354 is displayed, check No. 4 ignition coil with igniter circuit.
- If DTC P0355 is displayed, check No. 5 ignition coil with igniter circuit.
- If DTC P0356 is displayed, check No. 6 ignition coil with igniter circuit.

CIRCUIT DESCRIPTION

These DTCs indicate a malfunction related to primary circuit.

The DIS is a 1−cylinder ignition system which ignites one cylinder with one ignition coil. In the 1−cylinder ignition system, the one spark plug is connected to the end of the secondary winding. High voltage generated in the secondary winding is applied directly to the spark plug. The spark of the spark plug passes from the center electrode to the ground electrode.

The ECM determines the ignition timing and outputs the ignition signals (IGTs) for each cylinder. Using the IGT, the ECM turns on and off the power transistor inside the igniter and this switches on and off the current to the primary coil. When the current to the primary coil is cut off, high−voltage is generated in the secondary coil and this voltage is applied to the spark plugs to create sparks inside the cylinders. As the ECM cuts the current to the primary coil, the igniter sends back the ignition confirmation signal (IGF) for each cylinder ignition to the ECM.

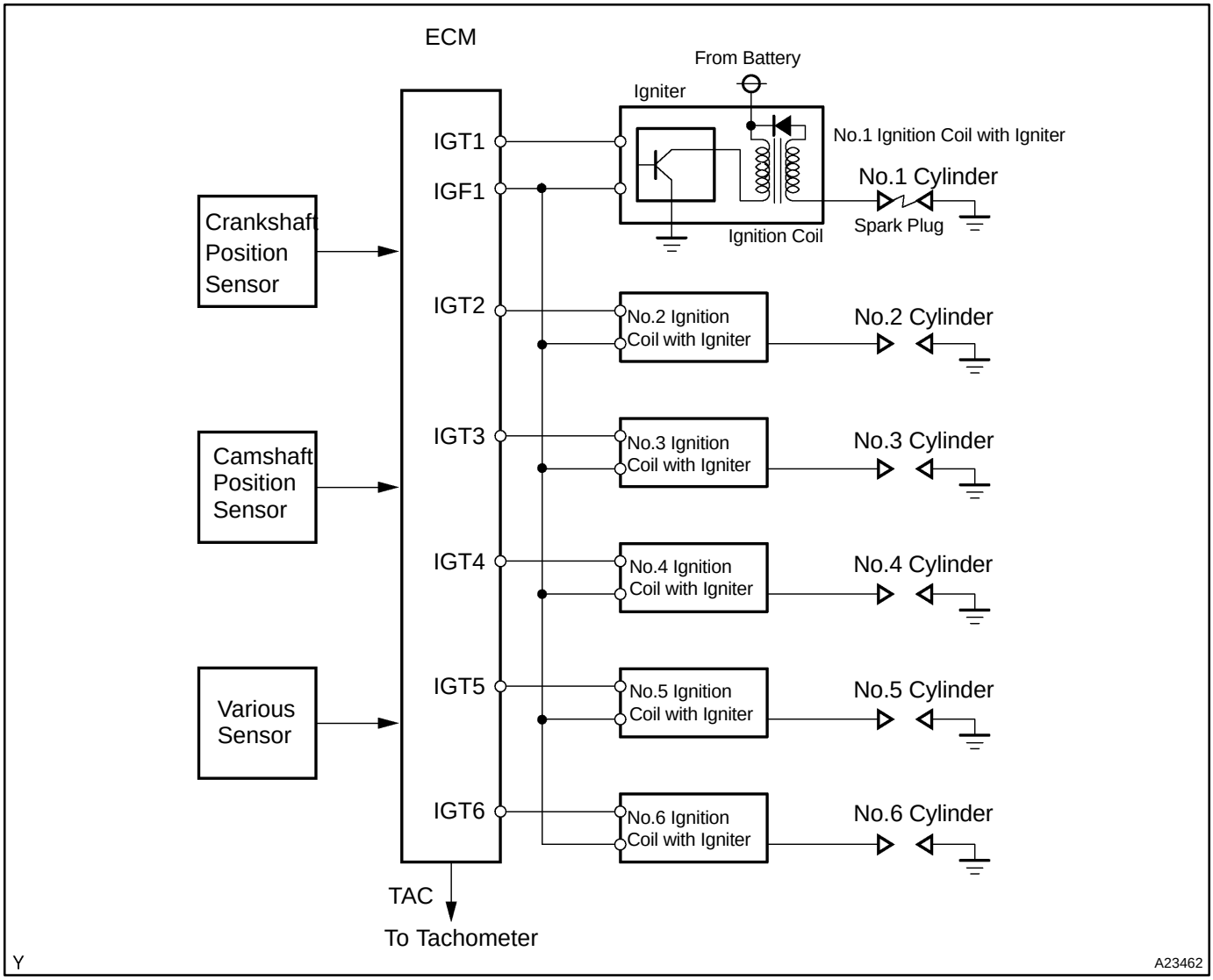

DTC No.	DTC Detecting Condition	Trouble Area
P0351 P0352 P0353 P0354 P0355 P0356	No IGF1 signal to ECM while engine is running	• Open or short in IGF1 and IGT1 to IGT6 circuit from ignition coil with igniter to ECM • No. 1 to No. 6 ignition coil with igniter (primary ignition) • Ignition system • ECM

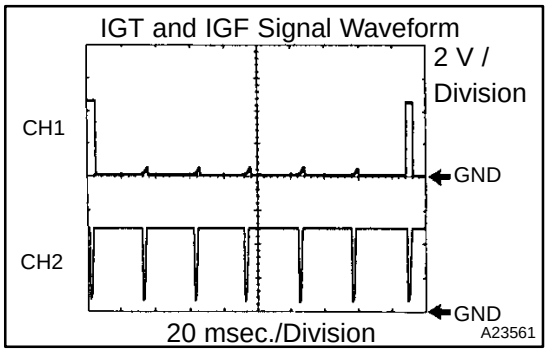

Reference: Inspection using the oscilloscope.
During cranking or idling, check the waveform between terminals IG1 to IG6 and E1, and terminal IGF1 and E1 of the E5 and E7 ECM connectors.

MONITOR DESCRIPTION

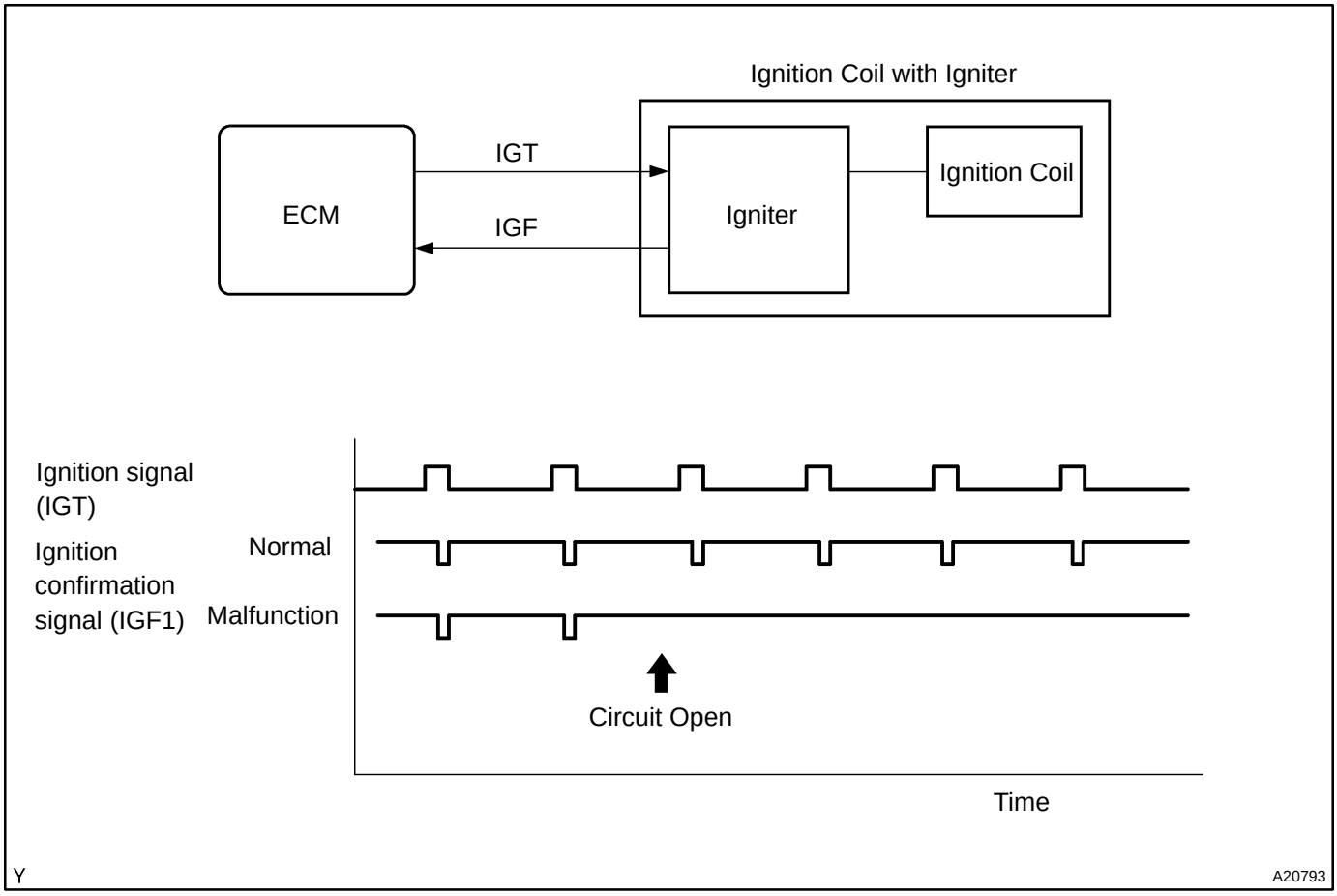

If the ECM does not receive the IGF1 after sending the IGT it interprets this as a fault in the igniter and sets a DTC.

MONITOR STRATEGY

Related DTCs	P0351	No. 1 ignition coil with igniter circuit malfunction
	P0352	No. 2 ignition coil with igniter circuit malfunction
	P0353	No. 3 ignition coil with igniter circuit malfunction
	P0354	No. 4 ignition coil with igniter circuit malfunction
	P0355	No. 5 ignition coil with igniter circuit malfunction
	P0356	No. 6 ignition coil with igniter circuit malfunction
Required sensors/components	Igniter	
Frequency of operation	Continuous	
Duration	0.256 sec. + 4 sparks	
MIL operation	Immediate	
Sequence of operation	None	

TYPICAL ENABLING CONDITIONS

Item	Specification	
	Minimum	Maximum
The monitor will run whenever these DTCs are not present	See page DI−18	
Engine speed	−	1,500 rpm
Either of the following conditions is met:	Condition 1 or 2	
1. Following conditions are met:	Condition (a) and (b)	
(a) Engine speed	−	500 rpm
(b) Battery voltage	6 V	−
2. Following conditions are met:	Condition (a) and (b)	
(a) Engine speed	500 rpm	−
(b) Battery voltage	10 V	−

TYPICAL MALFUNCTION THRESHOLDS

Detection Criteria	Threshold
”Ignition signal fail count”	More than 2
”Ignition signal fail count” is on the right:	When IGF does not return despite sending IGT.

COMPONENT OPERATING RANGE

Standard Value
Confirmed signal number = ignition signal number

WIRING DIAGRAM

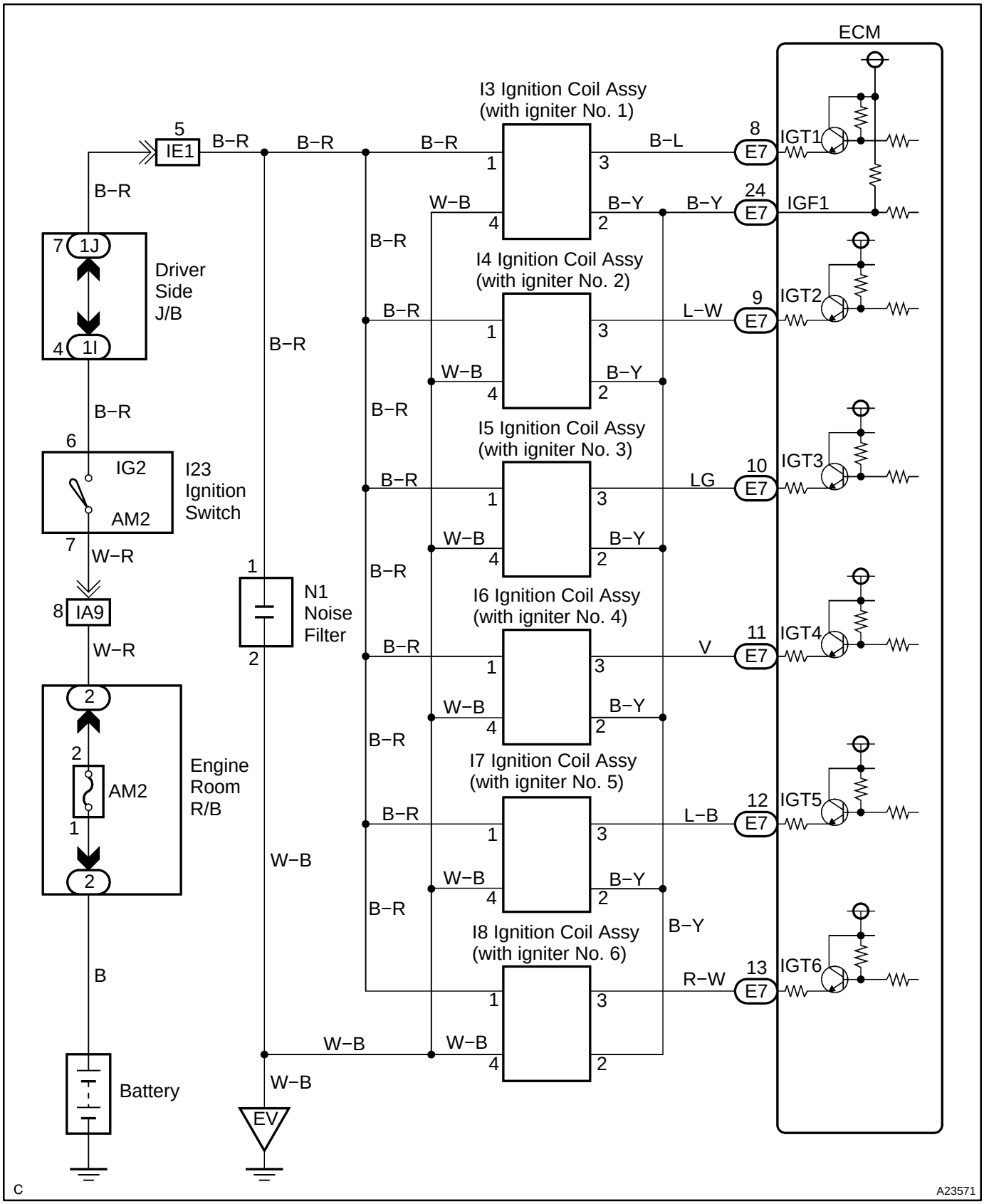

INSPECTION PROCEDURE

HINT:

Read freeze frame data using the hand−held tester. Freeze frame data records the engine conditions when a malfunction is detected. When troubleshooting, freeze frame data can help determine if the vehicle was running or stopped, if the engine was warmed up or not, if the air−fuel ratio was lean or rich, as well as other data from the time when a malfunction occurred.

1	**Check spark plug and spark (See page IG−1).**

NG → **Go to step 4.**

OK

2	**Check for open and short in harness and connector in IGF signal circuits between ECM and ignition coil with igniter.**

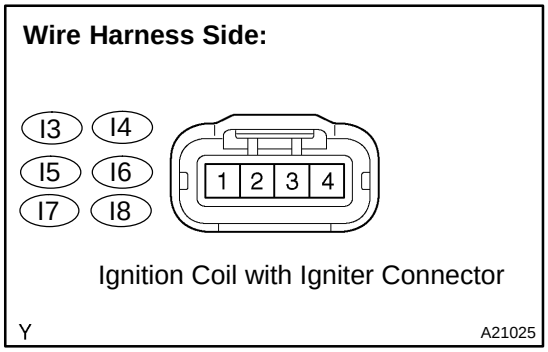

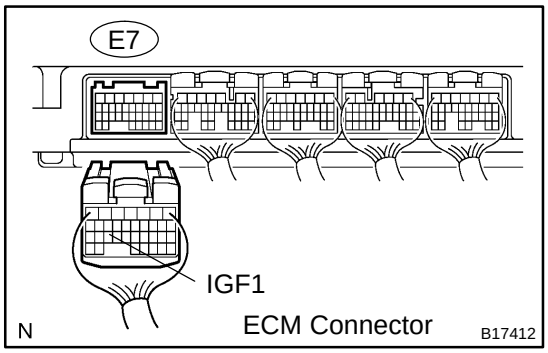

PREPARATION:

(a) Disconnect the I3, I4, I5, I6, I7 or I8 ignition coil will igniter connector.

(b) Disconnect the E7 ECM connector.

CHECK:

Check the resistance between the wire harness side connectors.

OK:

Standard:

Tester Connection	Specified Condition
Ignition coil (I3−2) − IGF1 (E7−24)	Below 1 Ω
Ignition coil (I4−2) − IGF1 (E7−24)	Below 1 Ω
Ignition coil (I5−2) − IGF1 (E7−24)	Below 1 Ω
Ignition coil (I6−2) − IGF1 (E7−24)	Below 1 Ω
Ignition coil (I7−2) − IGF1 (E7−24)	Below 1 Ω
Ignition coil (I8−2) − IGF1 (E7−24)	Below 1 Ω
Ignition coil (I3−2) or IGF1 (E7−24) − Body ground	10 kΩ or higher
Ignition coil (I4−2) or IGF1 (E7−24) − Body ground	10 kΩ or higher
Ignition coil (I5−2) or IGF1 (E7−24) − Body ground	10 kΩ or higher
Ignition coil (I6−2) or IGF1 (E7−24) − Body ground	10 kΩ or higher
Ignition coil (I7−2) or IGF1 (E7−24) − Body ground	10 kΩ or higher
Ignition coil (I8−2) or IGF1 (E7−24) − Body ground	10 kΩ or higher

NG → **Repair or replace harness or connector.**

OK

3	**Disconnect ignition coil with igniter connector, and check voltage between terminals IGF1 and E1 of ECM connector.**

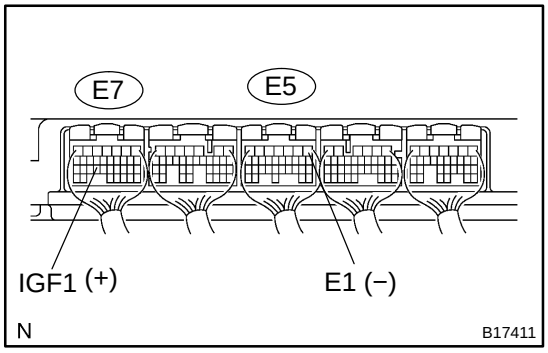

PREPARATION:

(a) Disconnect the I3, I4, I5, I6, I7 or I8 ignition coil with igniter connector.

(b) Turn the ignition switch ON.

CHECK:

Measure the voltage between the E8 and E6 ECM connectors.

OK:

Standard:

Tester Connection	Specified Condition
IGF1 (E7−24) − E1 (E5−1)	4.5 to 5.5 V

NG → **Replace ECM (See page SF−66).**

OK

Replace ignition coil with igniter.

4	**Check for open and short in harness and connector in IGT signal circuit between ECM and ignition coil with igniter.**

Wire Harness Side:

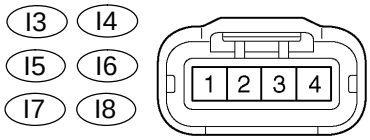

Ignition Coil with Igniter Connector

Y A21025

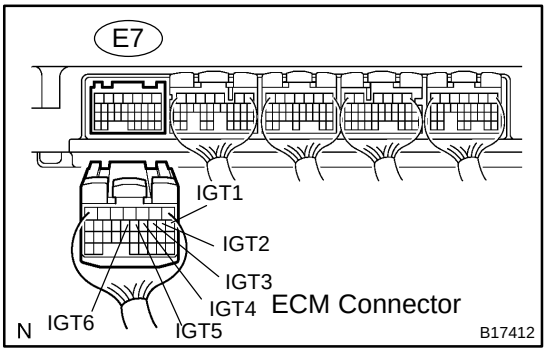

N B17412

PREPARATION:

(a) Disconnect the I3, I4, I5, I6, I7 or I8 ignition coil connector.

(b) Disconnect the E7 ECM connector.

CHECK:

Check the resistance between the wire harness side connectors.

OK:

Standard:

Tester Connection	Specified Condition
Ignition coil (I3−3) − IGT1 (E7−8)	Below 1 Ω
Ignition coil (I4−3) − IGT2 (E7−9)	Below 1 Ω
Ignition coil (I5−3) − IGT3 (E7−10)	Below 1 Ω
Ignition coil (I6−3) − IGT4 (E7−11)	Below 1 Ω
Ignition coil (I7−3) − IGT5 (E7−12)	Below 1 Ω
Ignition coil (I8−3) − IGT6 (E7−13)	Below 1 Ω
Ignition coil (I3−3) or IGT1 (E7−8) − Body ground	10 kΩ or higher
Ignition coil (I4−3) or IGT2 (E7−9) − Body ground	10 kΩ or higher
Ignition coil (I5−3) or IGT3 (E7−10) − Body ground	10 kΩ or higher
Ignition coil (I6−3) or IGT4 (E7−11) − Body ground	10 kΩ or higher
Ignition coil (I7−3) or IGT5 (E7−12) − Body ground	10 kΩ or higher
Ignition coil (I8−3) or IGT6 (E7−13) − Body ground	10 kΩ or higher

NG → **Repair or replace harness or connector.**

OK

5	Check voltage between terminals IGT1 to IGT6 and E1 of ECM connector.

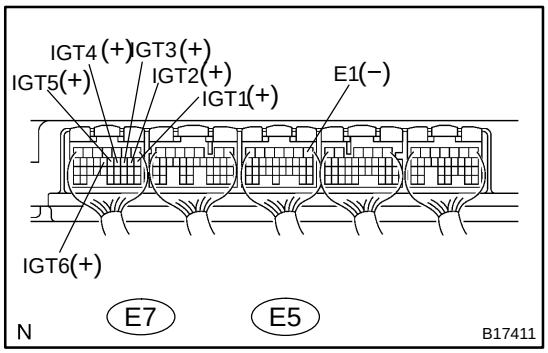

PREPARATION:

Disconnect the I3, I4, I5, I6, I7 or I8 ignition coil with igniter connector.

CHECK:

Measure the voltage between terminals the E5 and E7 ECM connectors when the engine is cranked.

OK:

Standard:

Tester Connection	Specified Condition
IGT1 (E7−8) − E1 (E5−1)	More than 0.1 V or less than 4.5 V
IGT2 (E7−9) − E1 (E5−1)	
IGT3 (E7−10) − E1 (E5−1)	
IGT4 (E7−11) − E1 (E5−1)	
IGT5 (E7−12) − E1 (E5−1)	
IGT6 (E7−13) − E1 (E5−1)	

NG → **Replace ECM (See page SF−66).**

OK

6	**Disconnect ignition coil with igniter connector, and check voltage between terminals IGT1 to IGT6 and E1 of ECM connector.**

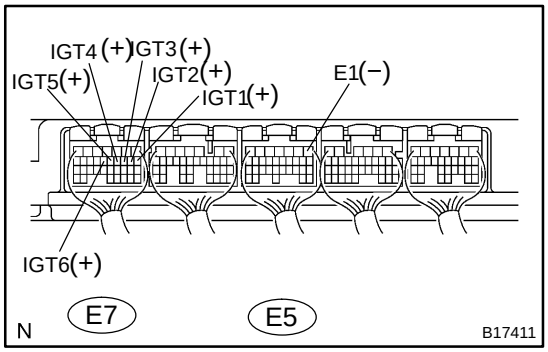

PREPARATION:

(a) Disconnect the I3, I4, I5, I6, I7 or I8 ignition coil with igniter connector.

(b) Turn the ignition switch to ON.

CHECK:

Measure the voltage between terminals the E5 and E7 ECM connectors when the engine is cranked.

OK:

Standard:

Tester Connection	Specified Condition
IGT1 (E7−8) − E1 (E5−1)	4.5 V or more
IGT2 (E7−9) − E1 (E5−1)	4.5 V or more
IGT3 (E7−10) − E1 (E5−1)	4.5 V or more
IGT4 (E7−11) − E1 (E5−1)	4.5 V or more
IGT5 (E7−12) − E1 (E5−1)	4.5 V or more
IGT6 (E7−13) − E1 (E5−1)	4.5 V or more

NG → **Replace ECM (See page SF−66).**

OK →

7	Check ignition coil with igniter power source circuit.

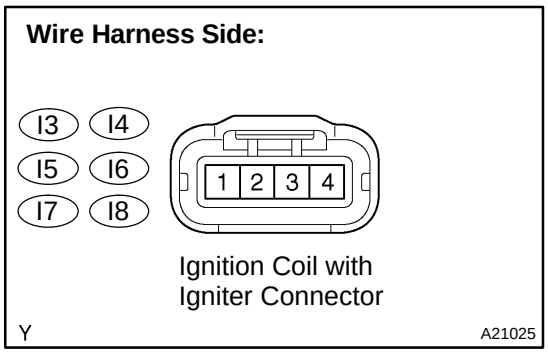

PREPARATION:

(a) Disconnect the I3, I4, I5, I6, I7 or I8 ignition coil with igniter connector.

(b) Turn the ignition switch to ON.

CHECK:

Measure the voltage between the terminal of the wire harness side connector and body ground.

OK:

Standard:

Tester Connection	Specified Condition
I3−1 − Body ground	9 to 14 V
I4−1 − Body ground	9 to 14 V
I5−1 − Body ground	9 to 14 V
I6−1 − Body ground	9 to 14 V
I7−1 − Body ground	9 to 14 V
I8−1 − Body ground	9 to 14 V

OK	Repair ignition coil with igniter.

NG

8	**Check for open and short in harness and connector between ignition switch and ignition coil with igniter.**

Wire Harness Side:

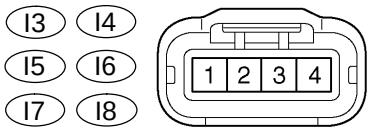

Ignition Coil with Igniter

Y A21025

Wire Harness Side:

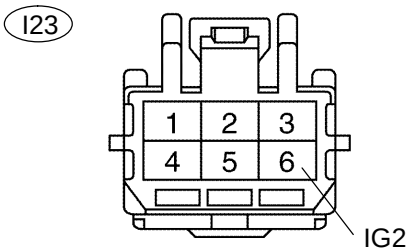

Ignition Switch

C A21378

PREPARATION:

(a) Disconnect the I3, I4, I5, I6, I7 or I8 ignition coil with igniter connector.

(b) Disconnect the I23 ignition switch connector.

CHECK:

Measure the resistance between the wire harness side connectors.

OK:

Standard:

Tester Connection	Specified Condition
Ignition coil (I3−1) − IG2 (I23−6)	Below 1 Ω
Ignition coil (I4−1) − IG2 (I23−6)	Below 1 Ω
Ignition coil (I5−1) − IG2 (I23−6)	Below 1 Ω
Ignition coil (I6−1) − IG2 (I23−6)	Below 1 Ω
Ignition coil (I7−1) − IG2 (I23−6)	Below 1 Ω
Ignition coil (I8−1) − IG2 (I23−6)	Below 1 Ω
Ignition coil (I3−1) or IG2 (I23−6) − Body ground	10 kΩ or higher
Ignition coil (I4−1) or IG2 (I23−6) − Body ground	10 kΩ or higher
Ignition coil (I5−1) or IG2 (I23−6) − Body ground	10 kΩ or higher
Ignition coil (I6−1) or IG2 (I23−6) − Body ground	10 kΩ or higher
Ignition coil (I7−1) or IG2 (I23−6) − Body ground	10 kΩ or higher
Ignition coil (I8−1) or IG2 (I23−6) − Body ground	10 kΩ or higher

NG → **Repair or replace harness or connector.**

OK

Replace ignition coil with igniter.

DIDTO−01

DTC	P0420	Catalyst System Efficiency Below Threshold (Bank 1)

DTC	P0430	Catalyst System Efficiency Below Threshold (Bank 2)

MONITOR DESCRIPTION

The ECM uses the two sensors, mounted in front of and behind the Three−way Catalytic Converter (TWC), to monitor its efficiency.

The first sensor, the Air−Fuel Ratio (A/F) sensor (sensor 1), sends pre−catalyst information to the ECM. The second sensor, the Heated Oxygen (HO2) sensor (sensor 2), sends post−catalyst information to the ECM. The ECM compares the information transmitted by these two sensors to determine the efficiency of the TWC performance and its ability to store oxygen.

When the TWC is functioning properly, the variation in the oxygen concentration in the exhaust gas, after it has passed through the TWC, is small. In this condition, the voltage output of sensor 2 slowly alternates between the rich and lean signal voltages (shown in the illustration below). As the TWC performance efficiency deteriorates, its oxygen storage capacity decreases, and the variation in the oxygen concentration in the exhaust gas increases. As a result, the sensor voltage output fluctuates frequently.

While the catalyst monitor is running, the ECM measures the signal lengths of both sensors 1 and 2, and calculates the ratio of the signal lengths to determine the extent of the TWC deterioration. If the deterioration level exceeds the preset threshold, the ECM interprets this as the TWC malfunction. The ECM then illuminates the MIL and sets the DTC.

DTC No.	DTC Detecting Condition	Trouble Area
P0420 P0430	After engine and catalyst are warmed up, and while vehicle is driven within set vehicle and engine speed range, each waveform of heated oxygen sensors has same amplitude (2 trip detection logic)	• Gas leakage on exhaust system • Heated oxygen sensor (bank 1, 2 sensor 1, 2) • Three−way catalytic converter

HINT:

- Bank 1 refers to the bank that includes cylinder No.1.
- Bank 2 refers to the bank that does not include cylinder No.1.
- Sensor 1 refers to the sensor closest to the engine assembly.
- Sensor 2 refers to the sensor farthest away from the engine assembly.

MONITOR STRATEGY

Related DTCs	P0420	Bank 1 catalyst is deteriorated
	P0430	Bank 2 catalyst is deteriorated
Required sensors/components	Main sensors/components	Front and rear heated oxygen sensor
	Related sensors/components	Mass air flow meter, Engine coolant temperature sensor, Engine speed sensor, Intake air temperature sensor
Frequency of operation	Once per driving cycle	
Duration	30 sec.	
MIL operation	2 driving cycles	
Sequence of operation	None	

TYPICAL ENABLING CONDITIONS

Item	Specification	
	Minimum	Maximum
The monitor will run whenever these DTCs are not present	See page DI−18	
Battery voltage	11 V	−
IAT	−10°C (14°F)	−
ECT	75°C (167°F)	−
Atmospheric pressure coefficient	0.75	−
Idle	OFF	
Engine RPM	−	3,200 rpm
A/F sensor	Activated	
Fuel system status	Closed loop	
Engine load	10 to 70 %	
All of the following conditions are met	Condition 1, 2 and 3	
1. MAF	5 to 70 g/sec	
2. Front catalyst temperature (estimated)	650 to 840°C (1,202 to 1,544°F)	
3. Rear catalyst temperature (estimated)	100 to 900°C (212 to 1,652°F)	
Rear HO2S monitor	Completed	
Shift position	4th	−

TYPICAL MALFUNCTION THRESHOLDS

Detection Criteria	Threshold
Oxygen storage capacity (OSC) of catalyst	Less than 0.04

MONITOR RESULT

Refer to page DI−26 for detailed information.

The test value and test limit information are described as shown in the following table. Check the monitor result and test values after performing the monitor drive pattern (see page DI−27).

- TID (Test Identification Data) is assigned to each emissions−related component.
- TLT (Test Limit Type):
  If TLT is 0, the component is malfunctioning when the test value is higher than the test limit.
  If TLT is 1, the component is malfunctioning when the test value is lower than the test limit.
- CID (Component Identification Data) is assigned to each test value.
- Unit Conversion is used to calculate the test value indicated on generic OBD II scan tools.

TID $01: Catalyst (Active A/F control method)

TLT	CID	Unit Conversion	Description of Test Data	Description of Test Limit
1	$01	Multiply by 0.0078 (no dimension)	Oxygen storage capacity (bank 1): Calculated by HO2S 2 output	Malfunction criteria for catalyst deterioration
1	$02	Multiply by 0.0078 (no dimension)	Oxygen storage capacity (bank 2): Calculated by HO2S 2 output	Malfunction criteria for catalyst deterioration

WAVEFORMS OF AIR−FUEL RATIO (A/F) AND HEATED OXYGEN (HO2) SENSORS

HINT:

Perform the operation with the engine speeds and time durations described below prior to check the waveforms of the A/F and HO2 sensors. This is in order to activate the sensors sufficiently to obtain the appropriate inspection results.

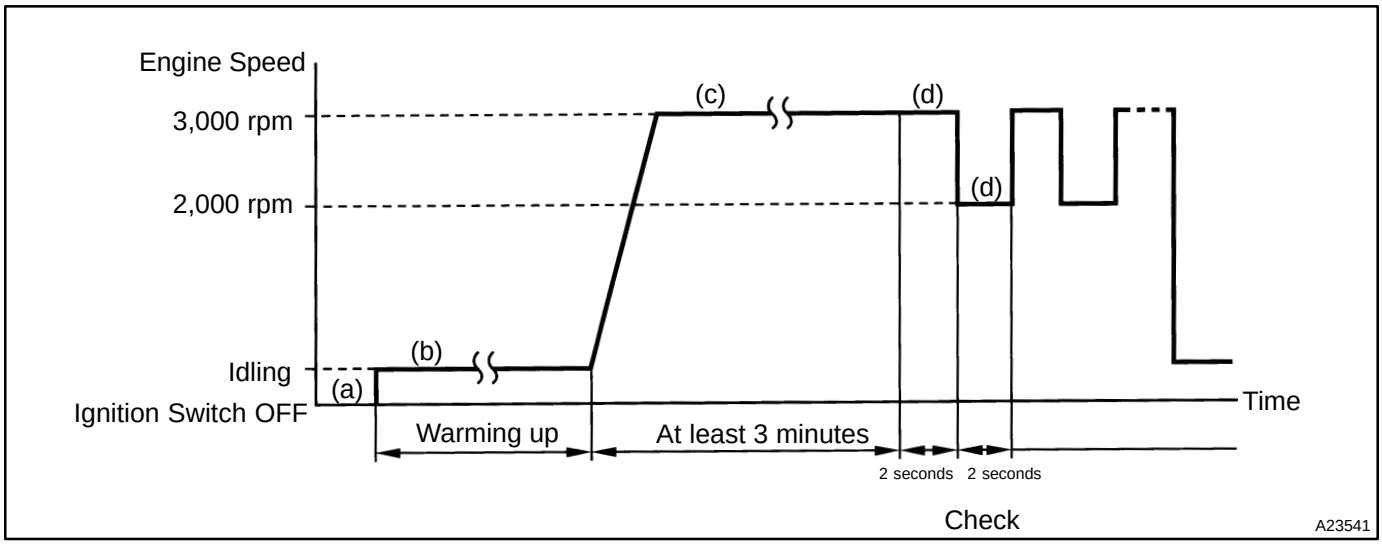

(a) Connect the hand−held tester to the DLC3.

(b) Start the engine and warm it up with all the accessories switched OFF, until the engine coolant temperature stabilizes.

(c) Run the engine at an engine speed of between 2,500 rpm and 3,000 rpm for at least 3 minutes.

(d) After confirming that the waveform of the heated oxygen sensor (bank 1, 2 sensor 1 (OX1A, OX2A)), oscillate around 0.5 V during feedback to the ECM, check the waveform of the heated oxygen sensor (bank 1, 2 sensor 2 (OX1B, OX2B)).

HINT:

- If either of the voltage outputs of the Air−Fuel Ratio (A/F) or Heated Oxygen (HO2) sensors does not fluctuate, or either of the sensors makes a noise, the sensor may be malfunctioning.
- If the voltage outputs of both the sensors remain lean or rich, the air−fuel ratio may be extremely lean or rich. In such cases, perform the following A/F CONTROL using a hand−held tester.

- If the Three−Way Catalytic Converter (TWC) has deteriorated, the HO2 sensor (located behind the TWC) voltage output fluctuates up and down frequently, even under normal driving conditions (active air−fuel ratio control is not performed).

Voltage output when active air−fuel ratio control not performed

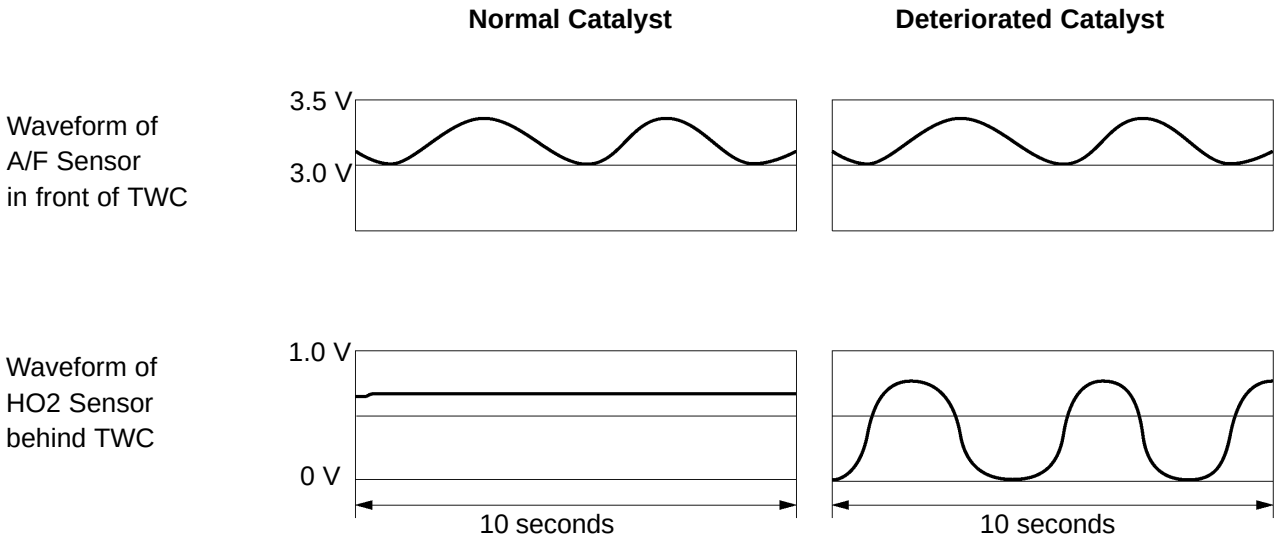

A/F CONTROL

HINT:

Hand−held tester only:

Malfunctioning areas can be identified by performing the A/F CONTROL function provided in the ACTIVE TEST. The A/F CONTROL function can help to determine whether the Air−Fuel Ratio (A/F) sensor, Heated Oxygen (HO2) sensor and other potential trouble areas are malfunctioning.

The following instructions describe how to conduct the A/F CONTROL operation using a hand−held tester.

(1) Connect a hand−held tester to the DLC3.
(2) Start the engine and turn the tester ON.
(3) Warm up the engine at an engine speed of 2,500 rpm for approximately 90 seconds.
(4) On the tester, select the following menu items: DIAGNOSIS / ENHANCED OBD II / ACTIVE TEST / A/F CONTROL.
(5) Perform the A/F CONTROL operation with the engine in an idling condition (press the RIGHT or LEFT button to change the fuel injection volume).
(6) Monitor the voltage outputs of the A/F and HO2 sensors (AFS B1S1 and OS2 B1S2) displayed on the tester.

HINT:

- The A/F CONTROL operation lowers the fuel injection volume by 12.5 % or increases the injection volume by 25 %.
- Each sensor reacts in accordance with increases and decreases in the fuel injection volume.

Standard:

Tester Display (Sensor)	Injection Volumes	Status	Voltages
AFS B1S1 (A/F)	+25 %	Rich	Less than 3.0
AFS B1S1 (A/F)	−12.5 %	Lean	More than 3.35
O2S B1S2 (HO2)	+25 %	Rich	More than 0.55
O2S B1S2 (HO2)	−12.5 %	Lean	Less than 0.4

NOTICE:

The Air−Fuel Ratio (A/F) sensor has an output delay of a few seconds and the Heated Oxygen (HO2) sensor has a maximum output delay of approximately 20 seconds.

Case	A/F Sensor (Sensor 1) Output Voltage	HO2 Sensor (Sensor 2) Output Voltage	Main Suspected Trouble Areas
1	Injection volume +25 % −12.5 % Output voltage More than 3.35 V Less than 3.0 V **OK**	Injection volume +25 % −12.5 % Output voltage More than 0.55 V Less than 0.4V **OK**	—
2	Injection volume +25 % −12.5 % Output voltage Almost no reaction **NG**	Injection volume +25 % −12.5 % Output voltage More than 0.55 V Less than 0.4V **OK**	● A/F sensor ● A/F sensor heater ● A/F sensor circuit
3	Injection volume +25 % −12.5 % Output voltage More than 3.35 V Less than 3.0V **OK**	Injection volume +25 % −12.5 % Output voltage Almost no reaction **NG**	● HO2 sensor ● HO2 sensor heater ● HO2 sensor circuit
4	Injection volume +25 % −12.5 % Output voltage Almost no reaction **NG**	Injection volume +25 % −12.5 % Output voltage Almost no reaction **NG**	● Injector ● Fuel pressure ● Gas leakage from exhaust system (Air−fuel ratio extremely lean or rich)

- Following the A/F CONTROL procedure enables technicians to check and graph the voltage outputs of both the A/F and HO2 sensors.
- To display the graph, select the following menu items on the tester: DIAGNOSIS / ENHANCED OBD II / ACTIVE TEST / A/F CONTROL / USER DATA / AFS B1S1 and O2S B1S2, and press the YES button and then the ENTER button followed by the F4 button.

INSPECTION PROCEDURE

HINT:

Read freeze frame data using the hand−held tester. Freeze frame data records the engine conditions when a malfunction is detected. When troubleshooting, freeze frame data can help determine if the vehicle was running or stopped, if the engine was warmed up or not, if the air−fuel ratio was lean or rich, as well as other data from the time when a malfunction occurred.

1	**Are there any other codes (besides DTC P0420 or P0430) being output?**

PREPARATION:

(a) Connect the hand−held tester to the DLC3.
(b) Turn the ignition switch to ON and push the hand−held tester main switch ON.
(c) When using hand−held tester, enter the following menu: DIAGNOSIS / ENHANCED OBD II / DTC INFO / CURRENT CODES.

CHECK:

Read the DTC using the hand−held tester.

RESULT:

Display (DTC Output)	Proceed to
”P0420 and/or P0430”	A
”P0420 or P0430” and other DTCs	B

HINT:

If any other codes besides ”P0420 and/or P0430” are output, perform the troubleshooting for those DTCs first.

B → **Go to DTC chart (See page DI−57).**

A

2	**Check gas leakage on exhaust system.**

NG → **Repair or replace exhaust gas leakage point.**

OK

3	**Check A/F sensor (bank 1, 2 sensor 1) (See page SF−64).**

HINT:

Refer to the HINT following the end of this flowchart.

NG → **Replace A/F sensor.**

OK

4	**Check heated oxygen sensor (bank 1, 2 sensor 2) (See page SF−64).**

HINT:
Refer to the HINT following the end of this flowchart.

NG → **Replace heated oxygen sensor.**

OK

Replace front and rear three−way catalytic converter in the bank a malfunction is detected.

HINT:
Hand−held tester only:
Narrowing down the trouble area is possible by performing ACTIVE TEST of the following ”A/F CONTROL” (Heated oxygen sensor or another can be distinguished).
(a) Perform ACTIVE TEST by hand−held tester (A/F CONTROL).
HINT:
”A/F CONTROL” is the ACTIVE TEST which changes the injection volume to −12.5 % or +25 %.
(1) Connect the hand−held tester to the DLC3 on the vehicle.
(2) Turn the ignition switch to ON.
(3) Warm up the engine with the engine speed at 2,500 rpm for approximately 90 seconds.
(4) Select the menu ”DIAGNOSIS / ENHANCED OBD II / ACTIVE TEST / A/F CONTROL”.
(5) Perform ”A/F CONTROL” with the engine in an idle condition (press the right or left button).

RESULT:

Heated oxygen sensor reacts in accordance with increase and decrease of injection volume
+25 % → rich output: More than 0.5 V
−12.5 % → lean output: Less than 0.4 V

NOTICE:
There is a few second delay in the sensor 1 (front sensor) output. And there is approximately 20 seconds delay in the sensor 2 (rear sensor).

	Output voltage of heated oxygen sensor (sensor 1: front sensor)	Output voltage of heated oxygen sensor (sensor 2: rear sensor)	Mainly suspected trouble area
Case 1	Injection volume +25 % −12.5 % 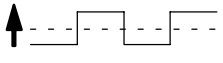 Output voltage More than 0.5 V Less than 0.4 V  **OK**	Injection volume +25 % −12.5 % 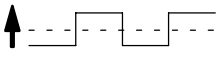 Output voltage More than 0.5 V Less than 0.4 V 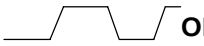 **OK**	—
Case 2	Injection volume +25 % −12.5 % 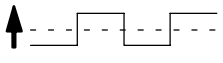 Output voltage Almost no reaction **NG**	Injection volume +25 % −12.5 % 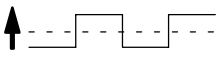 Output voltage More than 0.5 V Less than 0.4 V 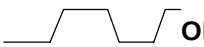 **OK**	Sensor 1: front sensor (sensor 1, heater, sensor 1 circuit)
Case 3	Injection volume +25 % −12.5 % 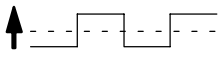 Output voltage More than 0.5 V Less than 0.4 V  **OK**	Injection volume +25 % −12.5 % 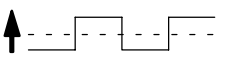 Output voltage Almost no reaction **NG**	Sensor 2: rear sensor (sensor 2, heater, sensor 2 circuit)
Case 4	Injection volume +25 % −12.5 % 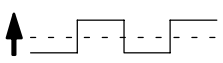 Output voltage Almost no reaction **NG**	Injection volume +25 % −12.5 % 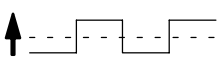 Output voltage Almost no reaction **NG**	Extremely rich or lean actual air−fuel ratio (Injector, fuel pressure, gas leakage in exhaust system, etc.)

The following A/F CONTROL procedure enables the technician to check and graph the voltage output of the heated oxygen sensors (sensor 1 and 2).
For displaying the graph indication, enter ”ACTIVE TEST / A/F CONTROL / USER DATA” then select ”O2S B1S1 and O2S B1S2” by pressing ”YES” button and push ”ENTER” button before pressing ”F4” button.
NOTICE:
If the vehicle is short of fuel, the air−fuel ratio becomes LEAN and DTCs P0133 and/or P0153 will be recorded, and the MIL then comes on.

- If different DTCs related to different systems while terminal E2 as ground terminal are output simultaneously, terminal E2 may be open.
- Read freeze frame data using the hand−held tester or the OBD II scan tool. Freeze frame data records the engine conditions when a malfunction is detected. When troubleshooting, it is useful for determining whether the vehicle was running or stopped, the engine was warmed up or not, the air−fuel ratio was lean or rich, etc. at the time of the malfunction.
- A high heated oxygen sensor (sensor 1) voltage (0.5 V or more) could be caused by a rich air fuel mixture. Check for conditions that would cause the engine to run rich.
- A low heated oxygen sensor (sensor 1) voltage (0.4 V or less) could be caused by a lean air fuel mixture. Check for conditions that would cause the engine to run lean.

DIDTQ−01

DTC	P0450	Evaporative Emission Control System Pressure Sensor/Switch

DTC	P0451	Evaporative Emission Control System Pressure Sensor/Switch Range/Performance

DTC	P0452	Evaporative Emission Control System Pressure Sensor/Switch Low Input

DTC	P0453	Evaporative Emission Control System Pressure Sensor/Switch High Input

DTC SUMMARY

DTC	Monitoring Items	Malfunction Detection Conditions	Trouble Areas	Detection Timings	Detection Logic
P0450	Pressure sensor voltage abnormal fluctuation	Sensor output voltage rapidly fluctuates beyond upper and lower malfunction thresholds for 0.5 seconds.	• Pump module • Connector/Wire harness (Pump module − ECM) • ECM	• EVAP monitoring (ignition OFF) • Ignition ON	1 trip
P0451	Pressure sensor noising	Sensor output voltage fluctuates frequently in certain time period.	• Pump module • Connector/Wire harness (Pump module − ECM) • ECM	• EVAP monitoring (ignition OFF) • Engine running	2 trip
P0451	Pressure sensor stuck	Sensor output voltage does vary in certain time period.	• Pump module • Connector/Wire harness (Pump module − ECM) • ECM	• EVAP monitoring (ignition OFF)	2 trip
P0452	Pressure sensor voltage low	Sensor output voltage is less than 0.45 V for 0.5 seconds.	• Pump module • Connector/Wire harness (Pump module − ECM) • ECM	• Ignition ON • EVAP monitoring (ignition OFF)	1 trip
P0453	Pressure sensor voltage high	Sensor output voltage is more than 4.9 V for 0.5 seconds.	• Pump module • Connector/Wire harness (Pump module − ECM) • ECM	• Ignition ON • EVAP monitoring (ignition OFF)	1 trip

HINT:
The pressure sensor is built into the pump module.

CIRCUIT DESCRIPTION

The circuit description can be found in the EVAP (Evaporative Emission) Inspection Procedure (see page DI−368).

MONITOR DESCRIPTION

Pressure Sensor Specification:

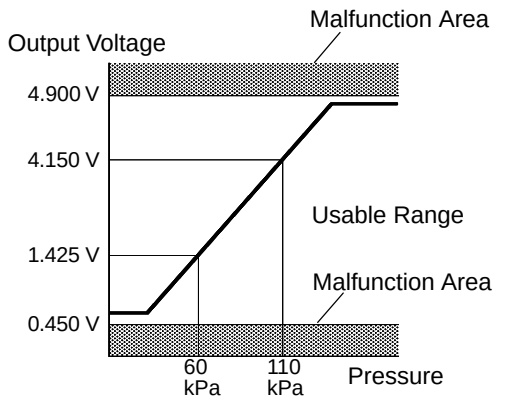

HINT:
Standard atmospheric pressure is 101.3 kPa

(a) DTC P0450: Pressure sensor voltage abnormal fluctuation.
If the pressure sensor voltage output rapidly fluctuates between less than 0.45 V and more than 4.9 V, the ECM interprets this as an open or short circuit malfunction in the pressure sensor or its circuit, and stops the EVAP (Evaporative Emission) system monitor. The ECM then illuminates the MIL and sets the DTC (1 trip detection logic).

(b) DTC P0451: Pressure sensor noising or stuck
If the pressure sensor voltage output fluctuates rapidly for 10 seconds, the ECM stops the EVAP system monitor. The ECM interprets this as noise from the pressure sensor, and stops the EVAP system monitor. The ECM then illuminates the MIL and sets the DTC.
Alternatively, if the sensor voltage output does not change for 10 seconds, the ECM interprets this as the sensor being stuck, and stops the monitor. The ECM then illuminates the MIL and sets the DTC.
(Both the malfunctions are detected by 2 trip detection logic)

(c) DTC P0452: Pressure sensor voltage low
If the pressure sensor voltage output is below 0.45 V, the ECM interprets this as an open or short circuit malfunction in the pressure sensor or its circuit, and stops the EVAP system monitor. The ECM then illuminates the MIL and sets the DTC (1 trip detection logic).

(d) DTC P0453: Pressure sensor voltage high
If the pressure sensor voltage output is 4.9 V or more, the ECM interprets this as an open or short circuit malfunction in the pressure sensor or its circuit, and stops the EVAP system monitor. The ECM then illuminates the MIL and sets the DTC (1 trip detection logic).

MONITOR STRATEGY

Related DTCs	P0450	Evaporative emission control system pressure sensor/switch chattering
	P0451	Evaporative emission control system pressure sensor noise
		Evaporative emission control system pressure sensor stuck
	P0452	Evaporative emission control system pressure sensor/switch low input
	P0453	Evaporative emission control system pressure sensor/switch high input
Required sensors/components	Pump module	
Frequency of operation	Once per driving cycle	
Duration	0.5 sec.: P0450, P0452, P0453 10 sec.: P0451	
MIL operation	Immediate: P0450, P0452, P0453 2 driving cycles: P0451	
Sequence of operation	None	

TYPICAL ENABLING CONDITIONS

Item	Specification	
	Minimum	Maximum
The monitor will run whenever these DTCs are not present	See page DI−18	
Pressure sensor noise:		
Atmospheric pressure	70 to 110 kPa (525 to 825 mmHg)	
Battery voltage	10.5 V	−
IAT	4.4 to 35°C (40 to 95°F)	
EVAP pressure sensor malfunction (P0450, P0452, P0453)	Not detected	
Either of the following conditions is met	Condition 1 or 2	
1. Time after key off	5 or 7 or 9.5 hours	
2. Engine condition	Running	
Pressure sensor stuck:		
Battery voltage	10.5 V	−
IAT	4.4 to 35°C (40 to 95°F)	
EVAP pressure sensor malfunction (P0450, P0452, P0453)	Not detected	
Atmospheric pressure	70 to 110 kPa (525 to 825 mmHg)	
Time after key off	5 or 7 or 9.5 hours	
Pressure sensor chattering, low/high voltage:		
Battery voltage	8 V	−
Ignition switch	ON	
Starter	OFF	

TYPICAL MALFUNCTION THRESHOLDS

Detection Criteria	Threshold
Pressure sensor noise:	
Frequency that EVAP pressure change is 0.3 kPa (2.3 mmHg) or more	10 times or more for 10 sec.
Pressure sensor stuck:	
EVAP pressure change during reference pressure measurement	Less than 0.65 kPa (4.9 mmHg)
Pressure sensor chattering:	
EVAP pressure	Less than 42.11 kPa (315.90 mmHg), or more than 123.761 kPa (928.440 mmHg)
Pressure sensor low voltage:	
EVAP pressure	Less than 42.11 kPa (315.90 mmHg)
Pressure sensor high voltage:	
EVAP pressure	More than 123.761 kPa (928.440 mmHg)

INSPECTION PROCEDURE

NOTICE:

- **When a vehicle is brought into the workshop, leave it as it is. Do not change the vehicle condition. For example, do not tighten the fuel tank cap.**
- **Do not disassemble the pump module.**
- **A hand−held tester is required to conduct the following diagnostic troubleshooting procedure.**

1	**Confirm DTC and EVAP pressure.**

PREPARATION:

(a) Connect a hand−held tester to the DLC3.
(b) Turn the ignition switch to ON (do not start the engine).
(c) Turn the tester ON.

CHECK:

(a) Select the following menu items: DIAGNOSIS / ENHANCED OBD II / DTC INFO / CURRENT CODES.
(b) Read DTCs.
(c) Select the following menu items: DIAGNOSIS / ENHANCED OBD II / DATA LIST / ALL / VAPOR PRESS.
(d) Read the EVAP (Evaporative Emission) pressure displayed on the tester.

RESULT:

Display (DTC Output)	Test Results	Suspected Trouble Areas	Proceed To
P0451	—	• Pressure sensor	C
P0452	Less than 45 kpa (338 mmHg)	• Wire harness/connector (ECM − pressure sensor) • Pressure sensor • Short in ECM circuit	A
P0453	More than 120 kPa (900 mmHg)	• Wire harness/connector (ECM − pressure sensor) • Pressure sensor • Open in ECM circuit	B

B	**Go to step 4.**
C	**Go to EVAP inspection procedure (See page DI−368).**

A

2	**Measure resistance between terminal PPMP of ECM and body ground.**

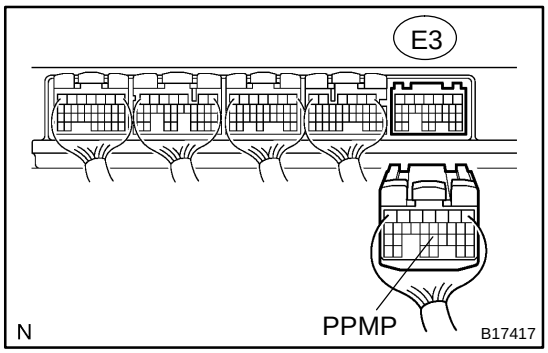

PREPARATION:

(a) Turn the ignition switch to OFF.

(b) Disconnect the E3 ECM connector.

CHECK:

Measure the resistance between PPMP terminal of the ECM connector and the body ground.

RESULT:

Test Results	Suspected Trouble Areas	Proceed To
10 Ω or less	• Wire harness/connector (ECM − pressure sensor) • Short in pressure sensor circuit	A
10 kΩ or more	• Wire harness/connector (ECM − pressure sensor) • Short in ECM circuit	B

B → **Go to step 7.**

A

3	Measure resistance between terminal PPMP of ECM and body ground.

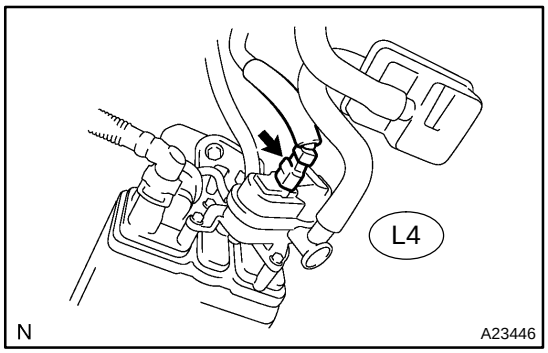

PREPARATION:

(a) Disconnect the L4 canister connector.

(b) Disconnect the E3 ECM connector.

CHECK:

Check the resistance between PPMP terminal of the ECM connector and the body ground.

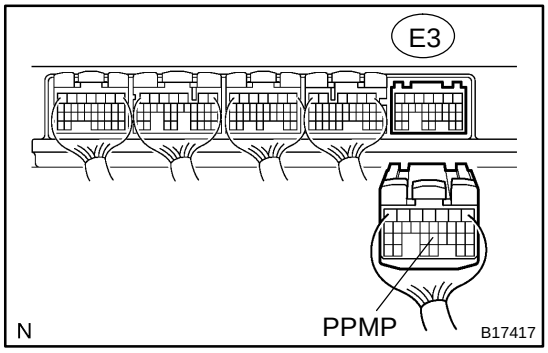

Result:

Test Results	Suspected Trouble Areas	Proceed To
10 kΩ or more	• Short in pressure sensor circuit	A
10 Ω or less	• Short in wire harness/connector (ECM − pressure sensor)	B

A	**Go to step 5.**
B	**Go to step 6.**

4	Measure voltage and resistance of pump module connector.

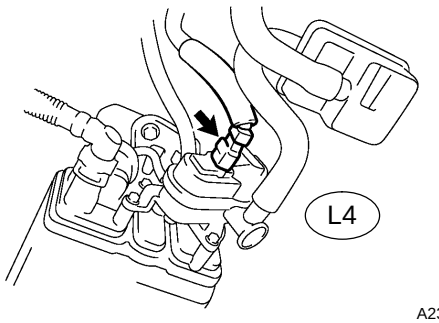

PREPARATION:

(a) Disconnect the L4 canister connector.

(b) Turn the ignition switch to ON.

CHECK:

Measure the voltage and resistance of the L4 connector.

OK:

Standard:

Tester Connections	Specified Conditions
L4−4 − Body ground	Between 4.5 V and 5.5 V
L4−3 − Body ground	Between 4.5 V and 5.5 V
L4−2 − Body ground	100 Ω or less

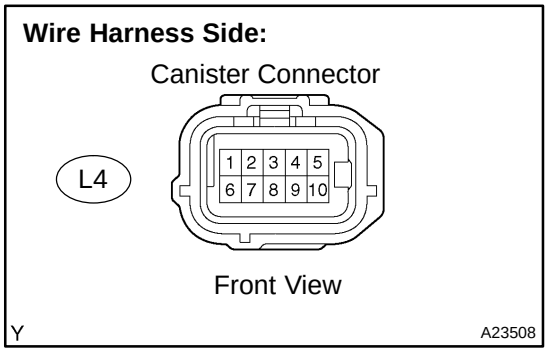

RESULT:

Test Results	Suspected Trouble Areas	Proceed To
Voltage and resistance within standard ranges	• Open in pressure sensor circuit	A
Voltage and resistance outside standard ranges	• Open in wire harness/connector (ECM − pressure sensor)	B

B → **Go to step 6.**

A

5	Replace charcoal canister assembly.

NEXT → **Go to step 8.**

6	Repair or replace wire harness and connectors.

HINT:

If the exhaust tail pipe has been removed, go to the next step before reinstalling it.

NEXT → **Go to step 8.**

7	**Replace ECM (See page SF−66).**

NEXT

8	**Check whether DTC output recurs.**

PREPARATION:

(a) Connect the hand−held tester to the DLC3.
(b) Turn the ignition switch to ON and turn the tester ON.
(c) Wait for at least 60 seconds.

CHECK:

On the tester, select the following menu items: DIAGNOSIS/ENHANCED OBD II/DTC INFO/PENDING CODES.

HINT:

If no pending DTC is displayed on the tester, the repair has been successfully completed.

NEXT

Completed

DIDTS−01

DTC	P0500	Vehicle Speed Sensor ”A”

DTC	P0503	Vehicle Speed Sensor ”A” Intermittent/ Erratic/High

CIRCUIT DESCRIPTION

The No.1 vehicle speed sensor outputs a 4−pulse signal for every revolution of the rotor shaft, which is rotated by the transmission output shaft via the driven gear. After this signal is converted into a more precise rectangular waveform by the waveform shaping circuit inside the combination meter, it is then transmitted to the ECM. The ECM determines the vehicle speed based on the frequency of these pulse signals.

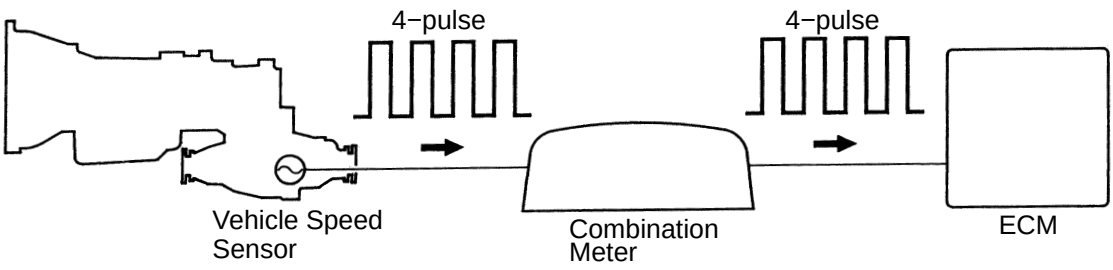

P22487

DTC No.	Proceed to	DTC Detection Condition	Trouble Area
P0500	Step 1	No vehicle speed sensor signal to ECM under following conditions: (1 trip detection logic) • Vehicle is being driven	• Combination meter • Open or short in vehicle speed sensor circuit • Vehicle speed sensor • ECM
P0503	DI−11	Intermittent problem in the vehicle speed sensor circuit	• Combination meter • Open or short in vehicle speed sensor circuit • Vehicle speed sensor • ECM

MONITOR DESCRIPTION

The ECM assumes that the vehicle is driven when the park/neutral position switch is OFF and it has been over 4 sec. since the actual vehicle speed was 6 mph (9 km/h) or more.
If there is no signal from the vehicle speed sensor when these conditions are satisfied, the ECM concludes that there is a fault in the vehicle speed sensor. The ECM will turn on the MIL and a DTC is set.

MONITOR STRATEGY

Related DTCs	P0500	Vehicle speed sensor ”A” pulse input error
Required sensors/components	Main sensors	Vehicle speed sensor
	Related sensors	Park/Neutral position switch, Engine coolant temperature sensor, Combination meter
Frequency of operation	Continuous	
Duration	Case 1: 500 times Case 2: 8 sec.	
MIL operation	Case 1: Immediate Case 2: 2 driving cycles	
Sequence of operation	None	

TYPICAL ENABLING CONDITIONS

Item	Specification	
	Minimum	Maximum
The monitor will run whenever this DTC is not present	See page DI−18	
Case 1:		
Vehicle speed is 5.59 mph (9 km/h) or more	4 sec.	−
Park/neutral position switch	OFF	
Case 2:		
ECT	70°C (158°F)	−
Fuel cut at high engine speed	Not executing	
Engine RPM	2,000 rpm	6,800 rpm
Battery voltage	8 V	−
Ignition switch	ON	
Starter	OFF	

TYPICAL MALFUNCTION THRESHOLDS

Detection Criteria	Threshold
Case 1, 2	
Sensor signal	No pulse input

WIRING DIAGRAM

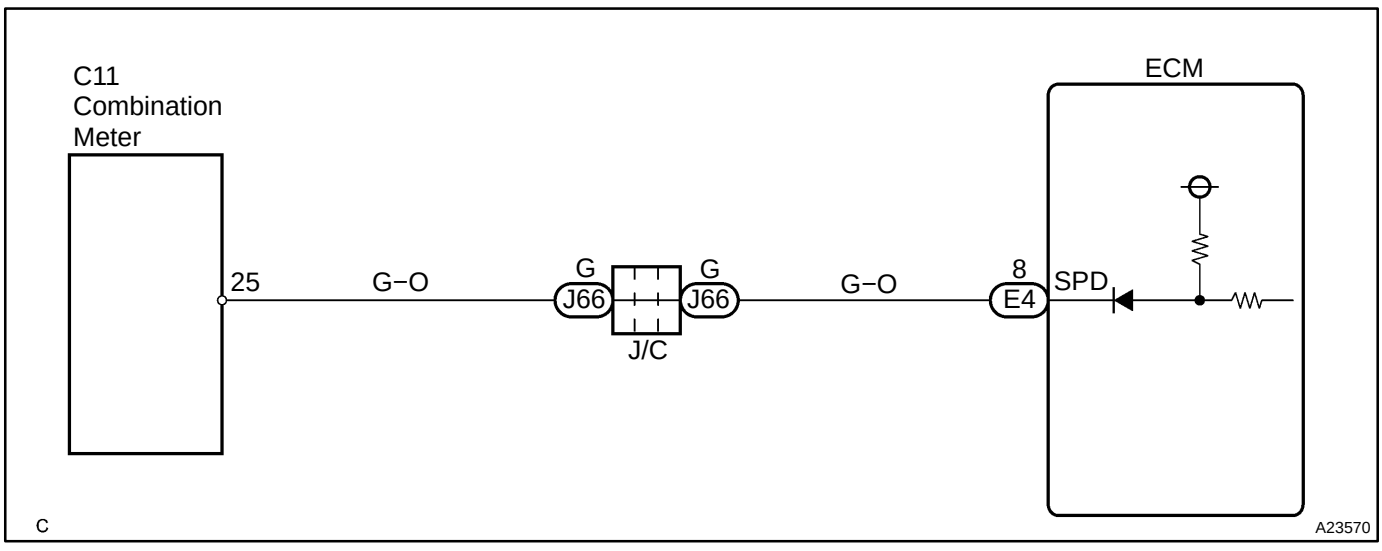

INSPECTION PROCEDURE

HINT:
Read freeze frame data using the hand−held tester. Freeze frame data records the engine conditions when a malfunction is detected. When troubleshooting, freeze frame data can help determine if the vehicle was running or stopped, if the engine was warmed up or not, if the air−fuel ratio was lean or rich, as well as other data from the time when a malfunction occurred.

1	**Check operation of speedometer.**

PREPARATION:

(a) Connect the hand−held tester to the DLC3.
(b) Turn the ignition switch to ON and push the hand−held tester main switch ON.
(c) Start the engine.
(d) When using hand−held tester, enter the following menu: DIAGNOSIS / ENHANCED OBD II / DATA LIST / PRIMARY / VEHICLE SPD.

CHECK:

Read the mass air flow rate on the hand−held tester.

RESULT:

Vehicle speed	Proceed to
Vehicle speed remains 0 km/h (0 mph)	A
Vehicle speed is lower than actual speed	A
Vehicle speed is same as actual speed	B

NG → **Check speedometer circuit. See combination meter troubleshooting (See page BE−2).**

OK

2	Check voltage between terminal SPD and E1 of ECM connector.

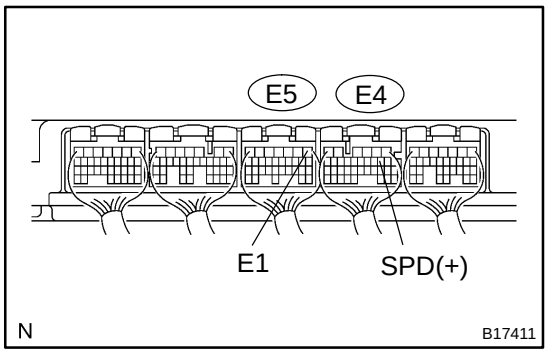

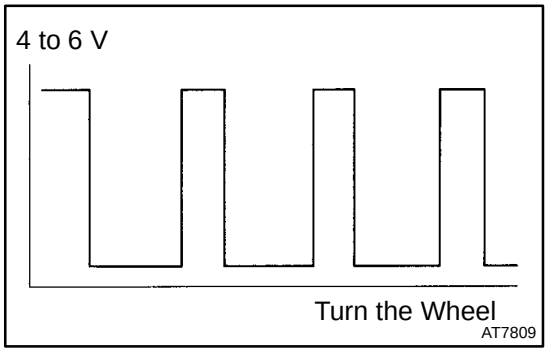

PREPARATION:

(a) Shift the shift lever to neutral.
(b) Jack up the rear wheel on one side.
(c) Turn the ignition switch to ON.

CHECK:

Measure the voltage between the specified terminal of the E4 and E5 ECM connectors when the wheel is turned slowly.

OK:

Standard:

Tester Connection	Specified Condition
SPD (E4−8) − E1 (E5−1)	Generated intermittently

HINT:

The output voltage should fluctuate up and down similarly to the diagram on the left when the wheel is turned slowly.

NG → **Check and repair harness and connector between combination meter and ECM.**

OK

Replace ECM (See page SF−66).

DIDTW−01

DTC	P0604	Internal Control Module Random Access Memory (RAM) Error

DTC	P0606	ECM/PCM Processor

DTC	P0607	Control Module Performance

DTC	P0657	Actuator Supply Voltage Circuit / Open

MONITOR DESCRIPTION

The ECM continuously monitors its internal memory status, internal circuits, and output signals to the throttle actuator. This self−check insures that the ECM is functioning properly. If any malfunction is detected, the ECM will set the appropriate DTC and illuminate the MIL.

The ECM memory status is diagnosed by internal ”mirroring” of the main CPU and the sub CPU to detect RAM (Random Access Memory) errors. The two CPUs also perform continuous mutual monitoring.

The ECM sets a DTC if: 1) outputs from the 2 CPUs are different and deviate from the standards, 2) the signals to the throttle actuator deviate from the standards, 3) a malfunction is found in the throttle actuator supply voltage, and 4) any other ECM malfunction is found.

DTC No.	DTC Detecting Condition	Trouble Area
P0604 P0606 P0607 P0657	ECM malfunction	• ECM

MONITOR STRATEGY

Related DTCs	P0604	Random access memory (RAM) error
	P0606	CPU malfunction
	P0607	ECM range check
	P0657	ETCS power supply
Required sensors/components	ECM	
Frequency of operation	Continuous	
Duration	Within 1 sec.	
MIL operation	Immediate	
Sequence of operation	None	

TYPICAL ENABLING CONDITIONS

The monitor will run whenever these DTCs are not present	See page DI−18
The typical enabling condition is not available	−

TYPICAL MALFUNCTION THRESHOLDS

Detection Criteria	Threshold
P0604:	
RAM	RAM check fail
P0606:	
Either of the following conditions is met	Condition 1 or 2
1. Difference between TP of main CPU and TP of sub CPU	0.3 V or more
2. Difference between APP of main CPU and APP of sub CPU	0.3 V or more
P0607:	
Either of the following conditions is met	Condition 1 or 2
1. All of the following conditions are met	Condition (a), (b) and (c)
(a) CPU reset	1 time or more
(b) Difference between TP and APP learned	0.4 V or more
(c) Electronic throttle actuator	OFF
2. CPU reset	2 times or more
P0657:	
ECTS power supply when ignition switch OFF to ON	7 V or more

INSPECTION PROCEDURE

HINT:

Read freeze frame data using the hand−held tester. Freeze frame data records the engine conditions when a malfunction is detected. When troubleshooting, freeze frame data can help determine if the vehicle was running or stopped, if the engine was warmed up or not, if the air−fuel ratio was lean or rich, as well as other data from the time when a malfunction occurred.

Replace ECM (See page SF−66).

DIDT1−01

CHECK MODE PROCEDURE

HINT:

Hand−held tester only:

Check mode has a higher sensitivity to detect malfunctions and can detect malfunctions that normal mode cannot detect. Check mode can also detect all the malfunctions that normal mode can detect.

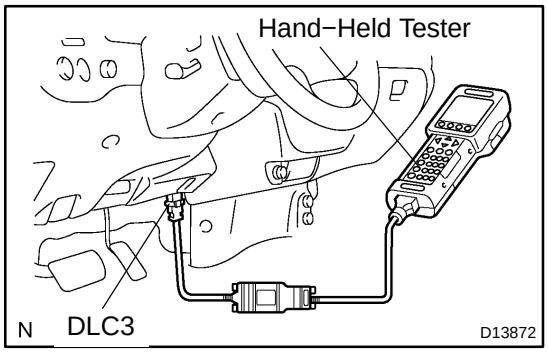

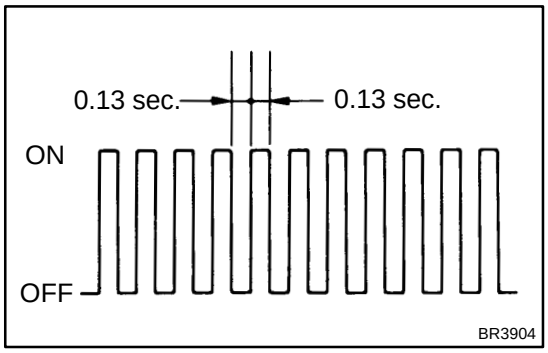

1. CHECK MODE PROCEDURE

(a) Make sure that the items below are true.
  (1) Battery positive voltage 11 V or more
  (2) Throttle valve fully closed
  (3) Transmission in the P or N position
  (4) A/C switched OFF

(b) Turn the ignition switch OFF.

(c) Connect the hand−held tester to the DLC3.

(d) Turn the ignition switch ON.

(e) Change the ECM to check mode with the hand−held tester. Enter the following menus: DIAGNOSIS / ENHANCED OBD II / CHECK MODE. Make sure the MIL flashes as shown in the illustration.

NOTICE:

All DTCs and freeze frame data recorded will be erased if: 1) the hand−held tester is used to change the ECM from normal mode to check mode or vice−versa; or 2) during check mode, the ignition switch is turned from ON to ACC or OFF.

(f) Start the engine. The MIL should turn off after the engine starts.

(g) Simulate the conditions of the malfunction described by the customer.

(h) After simulating the malfunction conditions, use the hand−held tester diagnosis selector to check the DTC, freeze frame data and other data.

(i) After checking the DTC, inspect the applicable circuit.

2. CLEAR DTC (Using the hand−held tester)

(a) Connect the OBD ll scan tool or the hand−held tester to the DLC3.

(b) Turn the ignition switch ON.

(c) Erase DTCs and freeze frame data with the OBD II scan tool (complying with SAE J1978) or the hand−held tester. For the hand−held tester: 1) enter the following menus: DIAGNOSIS / ENHANCED OBD II / DTC INFO / CLEAR CODES; and 2) press YES. For the OBD II scan tool, see its instruction manual.

3. CLEAR DTC (Not using the hand−held tester)

(a) Remove the EFI No. 1 and ETCS fuses from the engine room J/B for more than 60 seconds, or disconnect the battery terminal for more than 60 seconds.
After disconnecting the battery terminal, perform the ”INITIALIZE” procedure.

DIDSW−01

CHECKING MONITOR STATUS

1. OUTLINE

The monitor results and the test values can be checked with the hand−held tester.
The engine control module (ECM) monitors the emissions−related components as the thermostat, catalyst converter and evaporative emissions (EVAP), and determines whether they are functioning normally or not. When finished and monitoring, the ECM stores the monitor results and the test values.
The monitor result indicates whether the component is functioning normally or not. The test value is the value that was used to determine the monitor result. If the test value is outside the test limit (malfunction criterion), the ECM determines the component is malfunctioning. Some emissions−related components have multiple test values to determine monitor result. If one of these test values is outside test limit, the ECM determines the component is determine monitor result. If one of these test values is outside test limit, the ECM determines the components is malfunctioning.

2. DESCRIPTION

The test value and test limit information are described as shown in the following table. This information is included under ”MONITOR RESULT” in the emissions−related DTC sections.

Thermostat:

MID	TID	Scaling	Test Result	Minimum Test Limit	Maximum Test Limit
$E1	$E8	Multiply by 0.1 [°C]	ECT sensor output when estimated ECT reached to malfunction criteria	Malfunction criteria	Maximum test limit

- MID (Monitor Identification Data) is assigned to each emissions−related component.
- TID (Test Identification Data) is assigned to each test value.
- Scaling is used to calculate the test value indicated on generic hand−held tester.

3. PROCEDURE (USING HAND−HELD TESTER)

(a) Connect the hand−held tester to the DLC3.
(b) Turn the ignition switch and hand−held tester ON.
(c) Clear DTCs.
(d) Allow the vehicle to drive, in accordance with the applicable drive pattern described in the READINESS MONITOR DRIVE PATTERN section (see page DI−27).
(e) Check the monitor result. Select the hand−held tester menus: DIAGNOSIS/ENHANCED OBDII/MONITOR INFO/MONITOR STATUS. The monitor result appears after the component name.
- AVAIL indicates the component has not been monitored yet.
- COMPL indicates the component is functioning normally.
- INCMPL indicates the component is malfunctioning.

(f) Check the test value(s). Select the hand−held tester menus: DIAGNOSIS/ENHANCED OBDII/MONITOR INFO/TEST RESULT.
(g) Select the component and press ENTER. If the monitor result has been COMPL or INCMPL, the accuracy test value appears.
(h) Compare the test value with the test limits, MIN and MAX.
- If the test value is outside of the test limit, the component is malfunctioning.
- If the test value is on the borderline of the test limit, a malfunction is concealed in the component.

HINT:
The monitor result might on rare occasions be COMPL even if the malfunction indicator lamp (MIL) is illuminated. This indicates the system malfunctioned on a previous driving cycle. This might be caused by an intermittent problem.

DIDSQ−01

CUSTOMER PROBLEM ANALYSIS CHECK

ENGINE CONTROL SYSTEM Check Sheet

Inspector's Name _____

Customer's Name		VIN	
Driver's Name		Production Date	
Data Vehicle Brought in		Licence Plate No.	
Engine model		Odometer Reading	km miles

Problem Symptoms	☐ Engine does not Start	☐ Engine does not crank ☐ No initial combustion ☐ No complete combustion
	☐ Difficult to Start	☐ Engine cranks slowly ☐ Other _____
	☐ Poor Idling	☐ Incorrect first idle ☐ Idling rpm is abnormal ☐ High (rpm) ☐ Low (rpm) ☐ Rough idling ☐ Other _____
	☐ Poor Driveability	☐ Hesitation ☐ Back fire ☐ Muffler explosion (after−fire) ☐ Surging ☐ Knocking ☐ Other _____
	☐ Engine Stall	☐ Soon after starting ☐ After accelerator pedal depressed ☐ After accelerator pedal released ☐ During A/C operation ☐ Shifting from N to D ☐ Other _____
	☐ Others	

Dates Problem Occurred		
Problem Frequency		☐ Constant ☐ Sometimes (times per day/month) ☐ Once only ☐ Other _____
Condition When Problem Occurs	Weather	☐ Fine ☐ Cloudy ☐ Rainy ☐ Snowy ☐ Various/Other _____
	Outdoor Temperature	☐ Hot ☐ Warm ☐ Cool ☐ Cold (approx. ____ ˚C/____ ˚F)
	Place	☐ Highway ☐ Suburbs ☐ Inner city ☐ Uphill ☐ Downhill ☐ Rough road ☐ Other _____
	Engine Temp.	☐ Cold ☐ Warming up ☐ After warming up ☐ Any temp. ☐ Other _____
	Engine Operation	☐ Starting ☐ Just after starting (min.) ☐ Idling ☐ Racing ☐ Driving ☐ Constant speed ☐ Acceleration ☐ Deceleration ☐ A/C switch ON/OFF ☐ Other _____

Condition of malfunction indicator light (MIL)		☐ Remains on ☐ Sometimes lights up ☐ Does not light up
DTC Inspection	Normal Mode (Pre−check)	☐ Normal ☐ Malfunction code(s) (code) ☐ Freeze frame data ( )
	Check Mode	☐ Normal ☐ Malfunction code(s) (code) ☐ Freeze frame data ( )

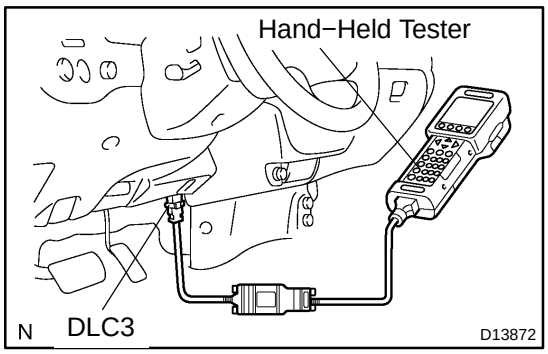

DIDT0−01

DTC CHECK / CLEAR

1. CHECK DTC

DTCs which are stored in the ECM can be displayed with the hand−held tester or generic OBD II scan tool.

These scan tools can display pending DTCs and current DTCs. Some DTCs are not stored if the ECM does not detect a malfunction during consecutive driving. However, the detected malfunction during once driving is stored as pending DTC.

(a) Connect the hand−held tester to the CAN VIM. Then connect the CAN VIM to the Data Link Connector 3 (DLC3).

(b) Turn the ignition switch to ON.

(c) Enter the following menus: DIAGNOSIS / ENHANCED OBD II / DTC INFO / CURRENT CODES (or PENDING CODE).

(d) Confirm the DTCs and freeze frame data and then write them down.

(e) See page DI−57 to confirm the details of the DTCs.

NOTICE:

When simulating a symptom with the hand−held tester to check the DTCs, use the normal mode. For DTC chart subject to ”2 trip detection logic”, perform either of the following actions.

Turn the ignition switch OFF after the symptom is simulated once. Then repeat the simulation process again. When the problem has been simulated twice, the MIL illuminates and the DTCs are recorded in the ECM.

2. CLEAR DTC

(a) Connect the hand−held tester to the CAN VIM. Then connect the CAN VIM to the DLC3.

(b) Turn the ignition switch to ON.

(c) Enter the following menus: DIAGNOSIS / ENHANCED OBD II / DTC INFO / CLEAR CODES and press YES.

DIDSZ−01

DIAGNOSIS SYSTEM

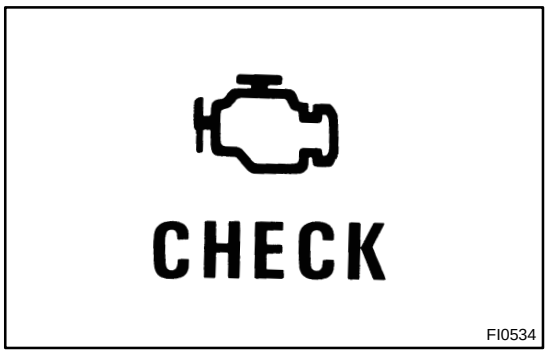

1. Description

- When troubleshooting On−Board Diagnostic (OBD ll) vehicles, the vehicle must be connected to the hand−held tester. Various data output from the vehicle's ECM can then be read.
- OBD ll regulations require that the vehicle's on−board computer illuminates the Malfunction Indicator Light (MIL) on the instrument panel when the computer detects a malfunction in: 1) the emission control system/components, or 2) the powertrain control components (which affect vehicle emissions), or 3) the computer. In addition, the applicable Diagnostic Trouble Codes (DTCs) prescribed by SAE J2012 are recorded in the ECM memory (See page DI−57).

If the malfunction does not reoccur in 3 consecutive trips, the MIL goes off automatically but the DTCs remain recorded in the ECM memory.

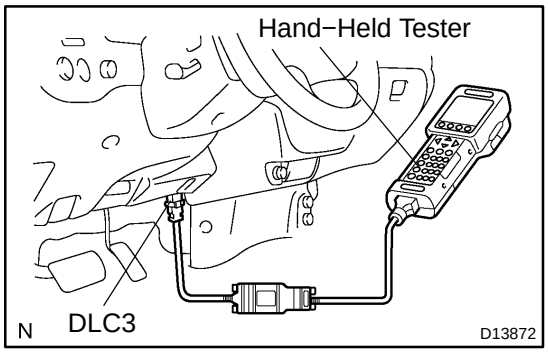

To check the DTC, connect the hand−held tester or OBD II scan tool to the Data Link Connector 3 (DLC3) of the vehicle. The hand−held tester also enables you to erase the DTC and check the freeze frame data and various forms of engine data (See the instruction manual for the hand−held tester). The DTC includes SAE controlled codes and manufacturer controlled codes. SAE controlled codes must be set according to the SAE, while manufacturer controlled codes can be set by a manufacturer with certain restrictions (See the DTC chart on page DI−57).

2. NORMAL MODE AND CHECK MODE

The diagnosis system operates in "normal mode" during normal vehicle use. In "normal mode", 2 trip detection logic* is used to ensure accurate detection of malfunctions. A "check mode" is also available to technicians as an option. In "check mode", 1 trip detection logic is used for simulating malfunction symptoms and increasing the system's ability to detect malfunctions, including intermittent malfunctions (See page DI−11).

3. 2−TRIP DETECTION LOGIC

When a malfunction is first detected, the malfunction is temporarily stored in the ECM memory. This is known as 1st trip detection. If the ignition switch is turned OFF and then ON again, and the same malfunction is detected again, the MIL will illuminate. This is known as 2nd trip detection.

- Freeze frame data:
  The freeze frame data records the engine conditions (fuel system, calculated load, engine coolant temperature, fuel trim, engine speed, vehicle speed, etc.) when a malfunction is detected. When troubleshooting, freeze frame data can help determine if the vehicle was running or stopped, if the engine was warmed up or not, if the air−fuel ratio was lean or rich, as well as other data from the time when a malfunction occurred.

Priorities for troubleshooting:

When multiple DTCs occur, find out the order in which the DTCs should be inspected by checking the component's DTC chart. If no instructions are written in the DTC chart, check DTCs in the following order of priority:

(a) DTCs other than fuel trim malfunction DTCs (P0171, P0172, P0174 and P0175) and misfire DTCs (P0300 to P0306).
(b) Fuel trim malfunction DTCs (P0171, P0172, P0174 and P0175).
(c) Misfire DTCs (P0300 to P0306).

4. CHECK DLC3

The vehicle's ECM uses the ISO 9141−2 for communication protocol. The terminal arrangement of the DLC3 complies with SAE J1962 and matches the ISO 9141−2 format.

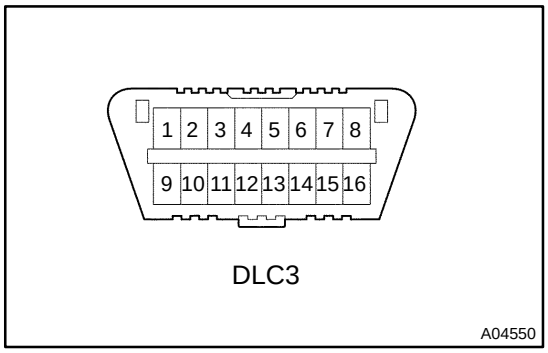

DLC3

Symbol	Terminal Description	Condition	Specified Condition
SIL (7) − SG (5)	Bus "+" line	During transmission	Pulse generation
CG (4) − Body ground	Chassis ground	Always	Below 1 Ω
SG (5) − Body ground	Signal ground	Always	Below 1 Ω
BAT (16) − Body ground	Battery positive	Always	11 to 14 V
CANH (6) − CANL (14)	HIGH−level CAN bus line	Ignition switch OFF	54 to 69 Ω
CANH (6) − Battery positive	HIGH−level CAN bus line	Ignition switch OFF	1 MΩ or higher
CANH (6) − CG (4)	HIGH−level CAN bus line	Ignition switch OFF	1 kΩ or higher
CANL (14) − Battery positive	LOW−level CAN bus line	Ignition switch OFF	1 MΩ or higher
CANL (6) − CG (4)	LOW−level CAN bus line	Ignition switch OFF	1 kΩ or higher

HINT:

Connect the cable of the hand−held tester to the DLC3, turn the ignition switch ON and attempt to use the hand−held tester. If the screen displays UNABLE TO CONNECT TO VEHICLE, a problem exists in the vehicle side or the tester side.

- If the communication is normal when the tool is connected to another vehicle, inspect the DLC3 on the original vehicle.

- If the communication is still impossible when the tool is connected to another vehicle, the problem is probably in the tool itself, so consult the Service Department listed in the tool's instruction manual.

5. INSPECT BATTERY VOLTAGE

Battery Voltage: 11 to 14 V

If voltage is below 11 V, recharge the battery before proceeding.

6. CHECK MIL

(a) The MIL comes on when the ignition switch is turned ON and the engine is not running.

HINT:

If the MIL is not illuminated, troubleshoot the MIL circuit (See page DI−417).

(b) When the engine is started, the MIL should not illuminate. If the lamp remains on, the diagnosis system has detected a malfunction or abnormality in the system.

7. ALL READINESS

For this vehicle, using the hand−held tester allows readiness codes corresponding to all DTCs to be read. When diagnosis (normal or malfunctioning) has been complete, readiness codes are set. Enter the following menus: ENHANCED OBD II / MONITOR STATUS on the hand−held tester.

DIDT3−01

DATA LIST / ACTIVE TEST

1. DATA LIST

HINT:

By reading the DATA LIST displayed on a hand−held tester, you can check values, including those of the switches, sensors, and actuators, without removing any parts. Reading the DATA LIST as the first step of troubleshooting is one method of shortening diagnostic time.

NOTICE:

In the table below, the values listed under Normal Conditions are for reference only. Do not depend solely on these values when determining whether or not a part is faulty.

(a) Warm up the engine.
(b) Turn the ignition switch to OFF.
(c) Connect a hand−held tester to the DLC3.
(d) Turn the ignition switch to ON.
(e) Turn the tester ON.
(f) Select the following menu items: DIAGNOSIS / ENHANCED OBD II / DATA LIST.
(g) Check the values by referring to the table below.

Hand−Held Tester Display	Measurement Item:Range (Display)	Normal Condition *	Diagnostic Note
INJECTOR	Injection period of the No. 1 cylinder: Min.: 0 ms, Max.: 32.64 ms	2.3 to 3.8 ms: Idling	—
IGN ADVANCE	Ignition timing advance for No. 1 cylinder/ Min.: −64 deg., Max.: 63.5 deg.	BTDC 4 to 17˚: Idling	—
CALC LOAD	Calculated load by ECM: Min.: 0 %, Max.: 100 %	• 11 to 21 %: Idling • 12 to 22 %: Running without load (2,500 rpm)	—
VEHICLE LOAD	Vehicle load: Min.: 0 %, Max.: 25700 %	Actual vehicle load	—
MAF	Air flow rate from MAF meter: Min.: 0 g/s, Max.: 655 g/s	2.0 to 3.9 g/s: Idling	If the value approximately 0.0 g/s: • Mass air flow meter power source circuit open • VG circuit open or short If the value 160.0 g/s or more: • E2G circuit open
ENGINE SPD	Engine speed: Min.: 0 rpm, Max.: 16,383 rpm	600 ±50 rpm: Idling	—
VEHICLE SPD	Vehicle speed: Min.: 0 km/h, Max.: 255 km/h	Actual vehicle speed	Speed indicated on speedometer
COOLANT TEMP	Engine coolant temperature: Min.: −40°C, Max.: 140°C	80 to 100˚C (176 to 212˚F): After warming up	• If the value −40°C (−40°F): sensor circuit open • If the value 140°C (284°F): sensor circuit shorted
INTAKE AIR	Intake air temperature: Min.: −40°C, Max.: 140°C	Equivalent to ambient air temperature	• If the value −40°C (−40°F): sensor circuit open • If the value 140°C (284°F): sensor circuit shorted
AIR−FUEL RATIO	Air−fuel ratio: Min.: 0, Max.: 1.999	0.8 to 1.2: During idling	—
EVAP VAPOR PRES	EVAP vapor pressure: Min.: −8192 Pa, Max.: 8191 Pa	0 Pa: Fuel tank cap removed	—
PURGE DENSITY	Learning value of purge density/ Min.: −50, Max.: 350	Idling: −40 to 0 %	Service data

PURGE FLOW	Purge flow: Min.: 0 %, Max.: 102.4 %	0 to 100 %: Idling	—
EVAP PURGE VSV	EVAP (Purge) VSV control duty: Min.: 0 %, Max.: 100 %	0 to 100 %: During idling	Order signal from ECM
VAPOR PRESS	Vapor pressure: Min.: −4.125 kPa, Max.: 2.125 kPa	0 kPa: Fuel tank cap removed	Pressure inside fuel tank monitored by the vapor pressure sensor
KNOCK CRRT VAL	Correction learning value of knocking: Min.: −64 CA, Max.: 1,984 CA	0 to 22 °CA: Driving, 44 mph (70 km/h)	Service data
KNOCK FB VAL	Feedback value of knocking: Min.: −64 CA, Max.: 1,984 CA	−22 to 0 °CA Driving, 44 mph (70 km/h)	Service data
ACCEL POS #1	Absolute Accelerator Pedal Position (APP) No. 1: Min.: 0 %, Max.: 100 %	10 to 22 %: accelerator pedal is released 54 to 86 %: accelerator pedal is fully depressed	—
ACCEL POS #2	Absolute APP No. 2: Min.: 0 %, Max.: 100 %	12 to 42 %: accelerator pedal is released 66 to 98 %: The accelerator pedal is fully depressed	—
ACCEL POS #1	APP sensor No. 1 voltage: Min.: 0 V, Max.: 4.98 V	—	ETCS freeze data
ACCEL POS #2	APP sensor No. 2 voltage: Min.: 0 V, Max.: 4.98 V	—	ETCS freeze data
ACCEL POS #1	APP sensor No. 1 voltage: Min.: 0 V, Max.: 5 V	0.5 to 1.1 V: accelerator pedal is released. 2.6 to 4.5 V: or pedal is fully depressed.	—
ACCEL POS #2	APP sensor No. 2 voltage: Min.: 0 V, Max.: 5 V	1.2 to 2.0 V: accelerator pedal is released. 3.4 to 5.3 V: accelerator pedal is fully depressed.	—
ACCEL IDL POS	Whether or not accelerator pedal position sensor detecting idle: ON or OFF	ON: Idling	—
THRTL LEARN VAL	Throttle valve fully closed (learned value):	0.4 to 0.8 V	—
ACCEL SSR #1 AD	Accelerator fully closed value No.1 (AD): Min.: 0, Max.: 4.98 V	—	ETCS service data
ACCEL LRN VAL#1	Accelerator fully closed learning value No.1: Min.: 0, Max.: 124.512	—	ETCS service data
ACCEL LRN VAL#2	Accelerator fully closed learning value No.2: Min.: 0, Max.: 124.512	—	ETCS service data
FAIL #1	Whether or not fail safe function executed: ON or OFF	ON: ETCS has failed	—
FAIL #2	Whether or not fail safe function executed: ON or OFF	ON: ETCS has failed	—
ST1	Starter signal: ON or OFF	ON: Cranking	—

SYSGUARD JUDGE	System guard: ON or OFF	—	ETCS service data
OPN MALFUNCTION	Open side malfunction: ON or OFF	—	ETCS service data
THROTTLE POS	Absolute throttle position sensor: Min.: 0 %, Max.: 100 %	• 10 to 24 %: Throttle fully closed • 64 to 96 %: Throttle fully open	Read the value with intrusive operation (active test)
THROTTL IDL POS	Whether or not throttle position sensor detecting idle: ON or OFF	ON: Idling	—
THRTL REQ POS	Throttle requirement position: Min.: 0 V, Max.: 5 V	0.5 to 1.0 V: Idling	—
THROTTLE POS	Throttle sensor positioning: Min.: 0 %, Max.: 100 %	10 to 18 %: Idling	Calculated value based on VTA1
THROTTLE POS #2	Throttle sensor positioning #2: Min.: 0 %, Max.: 100 %	—	Calculated value based on VTA2
THROTTLE POS #1	Throttle position sensor No. 1 output voltage: Min.: 0 V, Max.: 4.9 V	—	ETCS freeze data
THROTTLE POS #2	Throttle position sensor No.2 output voltage: Min.: 0 V, Max.: 4.9 V	—	ETCS freeze data
THROTTLE POS #1	Throttle position No. 1: Min.: 0 V, Max.: 5 V	• 0.5 to 1.2 V: Throttle fully closed • 3.2 to 4.8 V: Throttle fully opened	—
THROTTLE POS #2	Throttle position No. 2: Min.: 0 V, Max.: 5 V	• 2.0 to 2.9 V: Throttle fully closed • 4.6 to 5.5 V: Throttle fully open	Read the value with intrusive operation (active test)
THRTL COMND VAL	Throttle position command value: Min.: 0 V, Max.: 4.98 V	0.5 to 4.8 V	ETCS service data
THROTTLE SSR #1	Throttle sensor opener position No. 1: Min.: 0 V, Max.: 4.98 V	0.6 to 0.9 V	ETCS service data
THROTTLE SSR #2	Throttle sensor opener position No. 2: Min.: 0 V, Max.: 4.98 V	2.2 to 2.6 V	ETCS service data
THRTL SSR #1 AD	Throttle sensor opener position No.1 (AD): Min.: 0 V, Max.: 4.98 V	0.6 to 0.9 V	ETCS service data
THROTTLE MOT	Whether or not throttle motor control permitted: ON or OFF	ON: Idling	Read the value with the power switch ON (Do not start engine)
THROTTLE MOT	Throttle motor current: Min.: 0 A, Max.: 80 A	0 to 3.0 A: Idling	—
THROTTLE MOT	Throttle motor: Min.: 0 %, Max.: 100 %	0.5 to 40 %: Idling	—
THROTTLE MOT	Throttle motor current: Min.: 0 A, Max.: 19.92 A	0 to 3.0 A: Idling	—
THROTL OPN DUTY	Throttle motor opening duty ratio: Min.: 0 %, Max.: 100 %	0 to 40 %: During idling	When accelerator pedal depressed, duty ratio increased
THROTL CLS DUTY	Throttle motor closed duty ratio: Min.: 0 %, Max.: 100 %	0 to 40 %: During idling	When accelerator pedal released quickly, duty ratio increased
THRTL MOT (OPN)	Throttle motor duty ratio (open): Min.: 0 %, Max.: 100 %	—	ETCS service data
THRTL MOT (CLS)	Throttle motor duty ratio (close): Min.: 0 %, Max.: 100 %	—	ETCS service data

O2S B1 S2	Heated oxygen sensor output voltage for bank 1 sensor 2: Min.: 0 V, Max.: 1.275 V	0.1 to 0.9 V: Driving 44 mph (70 km/h)	Performing the INJ VOL or A/F CONTROL function of the ACTIVE TEST enables the technician to check voltage output of the sensor
O2S B2 S2	Heated oxygen sensor output voltage for bank 1 sensor 2: Min.: 0 V, Max.: 1.275 V	0.1 to 0.9 V: Driving 44 mph (70 km/h)	Performing the INJ VOL or A/F CONTROL function of the ACTIVE TEST enables the technician to check voltage output of the sensor
AFS B1 S1	A/F sensor output voltage for bank 1 sensor 1: Min.: 0 V, Max.: 7.999 V	2.8 to 3.8 V: Idling	Performing the INJ VOL or A/F CONTROL function of the ACTIVE TEST enables the technician to check voltage output of the sensor
AFS B2 S1	A/F sensor output voltage for bank 1 sensor 1: Min.: 0 V, Max.: 7.999 V	2.8 to 3.8 V: Idling	Performing the INJ VOL or A/F CONTROL function of the ACTIVE TEST enables the technician to check voltage output of the sensor
TOTAL FT #1	Total fuel trim of bank 1 Average value for fuel trim system of bank 1: Min.: −0.5, Max.: 1,496	−0.2 to 0.2: Idling	—
TOTAL FT #2	Total fuel trim of bank 1 Average value for fuel trim system of bank 1: Min.: −0.5, Max.: 1,496	−0.2 to 0.2: Idling	—
SHORT FT #1	Short−term fuel trim of bank 1: Min.: −100 %, Max.: 99.2%	0 ± 20 %	This item the short−term fuel compensation used to maintain the air−fuel ratio at stoichiometric air−fuel ratio
SHORT FT #2	Short−term fuel trim of bank 1: Min.: −100 %, Max.: 99.2%	0 ± 20 %	This item the short−term fuel compensation used to maintain the air−fuel ratio at stoichiometric air−fuel ratio
LONG FT #1	Long−term fuel trim of bank 1: Min.: −100 %, Max.: 99.2 %	0 ± 20 %	This item the overall fuel compensation carried out in long−term to compensate a continual deviation of the short−term fuel trim from the central value
LONG FT #2	Long−term fuel trim of bank 1: Min.: −100 %, Max.: 99.2 %	0 ± 20 %	This item the overall fuel compensation carried out in long−term to compensate a continual deviation of the short−term fuel trim from the central value
FUEL SYS #1	Fuel system status (Bank1): OL or CL or OL DRIVE or OL FAULT or CL FAULT	CL: Idling after warming up	• OL (Open Loop): Has not yet satisfied conditions to go closed loop • CL (Closed Loop): Using heated oxygen sensor as feedback for fuel control. • OL DRIVE: Open loop due to driving conditions (fuel enrichment) • OL FAULT: Open loop due to detected system fault • CL FAULT: Closed loop but heated oxygen sensor, which used for fuel control malfunctioning

FUEL SYS #2	Fuel system status (Bank1): OL or CL or OL DRIVE or OL FAULT or CL FAULT	CL: Idling after warming up	• OL (Open Loop): Has not yet satisfied conditions to go closed loop • CL (Closed Loop): Using heated oxygen sensor as feedback for fuel control. • OL DRIVE: Open loop due to driving conditions (fuel enrichment) • OL FAULT: Open loop due to detected system fault • CL FAULT: Closed loop but heated oxygen sensor, which used for fuel control malfunctioning
O2FT B1 S2	Short−term fuel trim associated with the bank 1 sensor 2: Min.: −100 %, Max.: 99.2 %	0 ± 20 %	Same as SHORT FT #1
O2FT B2 S2	Short−term fuel trim associated with the bank 1 sensor 2: Min.: −100 %, Max.: 99.2 %	0 ± 20 %	Same as SHORT FT #1
AF FT B1 S1	Short−term fuel trim associated with the bank 1 sensor 1: Min.: 0, Max.: 1.999	• Value less than 1 (0.000 to 0.999) = Lean • Stoichiometric air−fuel ratio=1 • Value greater than 1 (1.001 to 1.999) = RICH	—
AF FT B2 S1	Short−term fuel trim associated with the bank 1 sensor 1: Min.: 0, Max.: 1.999	• Value less than 1 (0.000 to 0.999) = Lean • Stoichiometric air−fuel ratio=1 • Value greater than 1 (1.001 to 1.999) = RICH	—
CAT TEMP B1S1	Catalyst temperature (Bank 1, Sensor 1): Min.: −40, Max.: 6,513.5 °C	—	—
CAT TEMP B2S1	Catalyst temperature (Bank 1, Sensor 1): Min.: −40, Max.: 6,513.5 °C	—	—
CAT TEMP B1S2	Catalyst temperature (Bank 1, Sensor 2): Min.: −40, Max.: 6,513.5 °C	—	—
CAT TEMP B2S2	Catalyst temperature (Bank 1, Sensor 2): Min.: −40, Max.: 6,513.5 °C	—	—
INI COOL TEMP	Initial engine coolant temperature: Min.: −40°C, Max.: 140°C	Close to ambient air temperature	Service data
INI INTAKE TEMP	Initial intake air temperature: Min.: −40°C, Max.: 140°C	Close to ambient air temperature	Service data
INJ VOL	Injection volume (cylinder 1): Min.: 0 ml, Max.: 2.048 ml	0 to 0.5 ml	Quantity of fuel injection volume for 10 times
ACC RELAY	ACC relay: ON or OFF	ON: Cranking	—
STARTER RELAY	Starter relay: ON or OFF	ON: Cranking	—
STARTER SIG	Starter signal: ON or OFF	ON: Cranking	—
STARTER CONTROL	Starter switch status: ON or OFF	ON: Cranking	—
PS SW	Power steering signal: ON or OFF	ON: Power steering operation	—

PS SIGNAL	Power steering signal: ON or OFF	ON: When steering wheel first turned after ignition switch turned to ON	This signal status usually ON until ignition switch turned to OFF
CTP SW	Closed throttle position switch: ON or OFF	• ON: Throttle fully closed • OFF: Throttle open	—
PNP SW (NSW)	PNP switch status: ON or OFF	ON: P or N position	—
A/C SIG	A/C signal: ON or OFF	ON: A/C ON	—
ELECT LOAD SIG	Electrical load signal: ON or OFF	ON: Headlights or defogger is turned ON	—
STOP LIGHT SW	Stop lamp switch: ON or OFF	ON: brake pedal is depressed.	—
+BM	Whether or not electric throttle control system power inputted: ON or OFF	ON: Idling	—
+BM VOLTAGE	+BM voltage: Min.: 0, Max.: 19.92	10 to 15 V: Idling	ETCS service data
BATTERY VOLTAGE	Battery voltage: Min.: 0 V, Max.: 65.535 V	9 to 14 V: Idling	—
ACTUATOR POWER	Actuator power supply: ON or OFF	ON: Idling	ETCS service data
ATM PRESSURE	Atmospheric pressure: Min.: 0 kPa, Max.: 150 kPa	Equivalent to atmospheric pressure (absolute pressure)	—
ACT VSV	A/C cut status for Active Test: ON or OFF	—	Active Test support data
ACIS VSV	VSV for ACIS control: ON or OFF	—	Active Test support data
EVAP (Purge) VSV	VSV status for EVAP control: ON or OFF	—	Active Test support data
FUEL PUMP / SPD	Fuel pump/speed status: ON or OFF	—	Active Test support data
FUEL SP CTL	Fuel pump speed control status: ON or OFF	—	Active Test support data
VVT CTRL B1	VVT control status: ON or OFF	—	Active Test support data
VVT CTRL B2	VVT control status: ON or OFF	—	Active Test support data
VACUUM PUMP	Key−off EVAP system pump status: ON or OFF	—	Active Test support data
EVAP VENT VAL	Key−off EVAP system vent valve status: ON or OFF	—	Active Test support data
TC/TE1	TC and TE1 terminal of DLC3: ON or OFF	—	—
VVTL AIM ANGL #1	VVT aim angle (bank 1): Min.: 0 %, Max.: 100 %	0 %: Idling	VVT duty signal value during intrusive operation
VVTL AIM ANGL #2	VVT aim angle (bank 1): Min.: 0 %, Max.: 100 %	0 %: Idling	VVT duty signal value during intrusive operation
VVT CHNG ANGL #1	VVT change angle: Min.: 0°FR, Max.: 60°FR	0 to 5 °FR: Idling	Displacement angle during intrusive operation
VVT CHNG ANGL #2	VVT change angle: Min.: 0°FR, Max.: 60°FR	0 to 5 °FR: Idling	Displacement angle during intrusive operation

VVT OCV DUTY B1	VVT OCV operation duty: Min.: 0 %, Max.: 100 %	0 %: Idling	Requested duty value for intrusive operation
VVT OCV DUTY B2	VVT OCV operation duty: Min.: 0 %, Max.: 100 %	0 %: Idling	Requested duty value for intrusive operation
FC IDL	Fuel cut idle: ON or OFF	ON: Fuel cut operation	FC IDL = ”ON” when throttle valve fully closed and engine speed over 2,800 rpm
FC TAU	Fuel cut TAU: Fuel cut during very light load: ON or OFF	ON: Fuel cut operating	The fuel cut being performed under very light load to prevent the engine combustion from becoming incomplete
IGNITION	Ignition counter: Min.: 0, Max.: 800	0 to 800	—
CYL #1, #2, #3, #4, #5, #6	Misfire ratio of the cylinder 1 to 4: Min.: 0, Max.: 255	0 %	This item displayed in only idling
CYL ALL	All cylinders misfire rate: Min.: 0, Max.: 255	0 to 35	—
MISFIRE RPM	Engine RPM for first misfire range: Min.: 0 rpm, Max.: 6,375 rpm	0 rpm: Misfire 0	—
MISFIRE LOAD	Engine load for first misfire range: Min.: 0 g/rev, Max.: 3.98 g/rev	0 g/rev: Misfire 0	—
MISFIRE MARGIN	Misfire monitoring: MIn.: −100 %, Max.: 99.22 %	−100 to 99.2 %	Misfire detecting margin
#CODES	#Codes: Min.: 0, Max.: 255	—	Number of detected DTCs
CHECK MODE	Check mode: 0: ON, 1: OFF	ON: Check mode ON	See page DI−43
SPD TEST	Check mode result for vehicle speed sensor: 0: COMPL, 1: INCOMPL	—	See page DI−43
MISFIRE TEST	Check mode result for misfire monitor: 0: COMPL, 1: INCOMPL	—	See page DI−43
OXS1 TEST	Check mode result for HO2 sensor : 0: COMPL, 1: INCOMPL	—	See page DI−43
OXS2 TEST	Check mode result for HO2 sensor : 0: COMPL, 1: INCOMPL	—	See page DI−43
A/F SSR TEST B1	Check mode result for air−fuel ratio sensor : 0: COMPL, 1: INCOMPL	—	See page DI−43
A/F SSR TEST B2	Check mode result for air−fuel ratio sensor : 0: COMPL, 1: INCOMPL	—	See page DI−43
MIL	MIL status: ON or OFF	ON: MIL ON	—
MIL ON RUN DIST	MIL ON Run Distance: Min.: 0 second, Max.: 65,535 seconds	Distance after DTC detected	—
MIL ON RUN TIME	Running time from MIL ON: Min.: 0 minute, Max.: 65,535 minutes	Equivalent to running time after MIL was ON	—

ENG RUN TIME	Engine run time: Min.: 0 second, Max.: 65,535 seconds	Time after engine start	Service data
TIME DTC CLEAR	Time after DTC cleared: Min.: 0 minute, Max.: 65,535 minutes	Equivalent to time after DTCs were erased	—
DIST DTC CLEAR	Distance after DTC cleared: Min.: 0 km/h, Max.: 65535 km/h	Equivalent to drive distance after DTCs were erased	—
WU CYC DTC CLEAR	Warm−up cycle after DTC cleared: Min.: 0, Max.: 255	—	Number of warm−up cycles after DTC cleared
MODEL CODE	Model code:	—	Identifying the model code: GSK3#
ENGINE TYPE	Engine type:	—	Identifying the engine type: 1GRFE
CYLINDER NUMBER	Cylinder number: Min.: 0, Max.: 255	—	Identifying the cylinder number: 6
TRANSMISSION	Transmission type:	—	Identifying the transmission type: ECT(5AT), M/T
DESTINATION	Destination	—	Identifying the destination: A (America)
MODEL YEAR	Model year: Min.: 0, Max.: 255	—	Identifying the model year: 200#
SYSTEM	System identification	—	Identifying the engine system: GASLIN (gasoline engine)

*1: If no idling conditions are specified, the transmission gear selector lever should be in the N or P position, and the A/C switch and all accessory switches should be OFF.

2. ACTIVE TEST

HINT:

Performing an ACTIVE TEST enables components including the relays, VSV (Vacuum Switching Valve), and actuators, to be operated without removing any parts. The ACTIVE TEST can be performed with a hand−held tester. Performing an ACTIVE TEST as the first step of troubleshooting is one method of shortening diagnostic time.

DATA LIST can be displayed during ACTIVE TESTs.

(a) Connect a hand−held tester to the DLC3.
(b) Turn the ignition switch to ON.
(c) Turn the tester ON.
(d) Select the following menu items: DIAGNOSIS / ENHANCED OBD II / ACTIVE TEST.
(e) Perform the ACTIVE TEST by referring to the table below.

Hand−held Tester Displays	Test Details	Control Ranges	Diagnostic Notes
INJ VOL	Change injection volume	Between −12 % and 25 %	• All injectors tested at the same time • Perform test at less than 3,000 rpm • Injection volume can be changed in 1 % graduations within control range
A/F CONTROL	Change injection volume	Lower by 12.5 % or increase by 25 %	• Perform test at less than 3,000 rpm • A/F CONTROL enables checking and graphing of A/F (Air Fuel Ratio) sensor and Heated Oxygen (HO2) sensor voltage outputs • To conduct test, select following menu items: ACTIVE TEST / A/F CONTROL / USER DATA / AFS B1S1 and O2S B1S2, and press YES and ENTER followed by F4
FUEL PMP SP CTL	Fuel pump speed control	ON (low speed)/OFF (high speed)	Test possible when following conditions met: • Engine switch on (IG) • Engine is stopped
INTAKE CTL VSV1	ACIS VSV	ON/OFF	−
EVAP VSV (ALONE)	Activate EVAP VSV control	ON/OFF	−
VVT CTRL B1	Turn on and off OCV (Oil Control Valve)	ON/OFF	• Engine stalls or idles roughly when OCV turned ON • Normal engine running or idling when OCV off
VVT CTRL B2	Turn on and off OCV (Oil Control Valve)	ON/OFF	• Engine stalls or idles roughly when OCV turned ON • Normal engine running or idling when OCV off
A/C CUT SIG	Control A/C cut signal	ON/OFF	−
FUEL PUMP/SPD	Activate fuel pump (C/OPN Relay)	ON/OFF	−
TC/TE1	Turn on and off TC and TE1 connection	ON/OFF	• ON: TC and TE1 connected • OFF: TC and TE1 disconnected
FC IDL PROHBT	Prohibit idling fuel cut control	ON/OFF	−
STARTER	Starter	ON/OFF	−
ACC CUT	Active ACC cut relay	ON/OFF	Test possible when following conditions met: • Engine switch on (IG) • Engine is stopped

ETCS OPEN SLOW	Throttle actuator	ON: throttle valve opens slowly	This test is possible when the following conditions are met: • Ignition switch ON • Engine does not start • Fully depressing accelerator pedal (APP: 58 degrees or more)
ETCS CLOSE SLOW	Throttle actuator	ON: throttle valve closes slowly	Same as above
ETCS OPEN FAST	Throttle actuator	ON: throttle valve opens fast	Same as above
ETCS CLOSE FAST	Throttle actuator	ON: throttle valve closes fast	Same as above
FUEL CUT #1	Cylinder #1 injector fuel cut	ON/OFF	This test is possible during vehicle stopping and engine idling.
FUEL CUT #2	Cylinder #2 injector fuel cut	ON/OFF	Same as above
FUEL CUT #3	Cylinder #3 injector fuel cut	ON/OFF	Same as above
FUEL CUT #4	Cylinder #4 injector fuel cut	ON/OFF	Same as above
FUEL CUT #5	Cylinder #5 injector fuel cut	ON/OFF	Same as above
FUEL CUT #6	Cylinder #6 injector fuel cut	ON/OFF	Same as above
VVT B1	Control the VVT (bank 1)	−128 to 127% This valve added to present OCV control duty 100%: Maximum advance −100%: Maximum retard	Engine stall or rough idle when the VVT actuator is operated by 100%. This test is possible during idle.
VVT B2	Control the VVT (bank 2)	Between −128% and 127%	Same as above
VENT VALVE (ALONE)	Activate vent valve (built into pump module)	ON/OFF	−
VCUUM PUMP	Activate vacuum pump (built into pump module)	ON/OFF	−

3. SYSTEM CHECK

HINT:

Performing a SYSTEM CHECK enables the system, which consists of multiple actuators, to be operated without removing any parts. In addition, it can show whether or not any DTCs are set, and can detect potential malfunctions in the system. The SYSTEM CHECK can be performed with a hand−held tester.

(a) Connect a hand−held tester to the DLC3.
(b) Turn the ignition switch to ON.
(c) Turn the tester ON.
(d) Select the following menu items: DIAGNOSIS / ENHANCED OBD II / SYSTEM CHECK.
(e) Perform the SYSTEM CHECK by referring to the table below.

Hand−held Tester Displays	Test Details	Recommended Fuel Temperatures	Diagnostic Notes
EVAP SYS CHECK (AUTO OPERATION)	Perform 5 steps in order to operate EVAP key−off monitor automatically	35°C (95°F) or less	• If no DTCs in PENDING CODE after performing this test, system functioning normally • Refer to EVAP Inspection Procedure on page DI−368
EVAP SYS CHECK (MANUAL OPERATION)	Perform 5 steps in order to operate EVAP key−off monitor manually	35°C (95°F) or less	• Used to detect malfunctioning parts • Refer to EVAP Inspection Procedure on page DI−368

DIDSL−01

DEFINITION OF TERMS

Term	Definition
Monitor description	Description of what the ECM monitors and how it detects malfunctions (monitoring purpose and its details).
Related DTCs	Diagnostic code
Typical enabling condition	Preconditions that allow the ECM to detect malfunctions. With all preconditions satisfied, the ECM sets the DTC when the monitored value(s) exceeds the malfunction threshold(s).
Sequence of operation	The priority order that is applied to monitoring, if multiple sensors and components are used to detect the malfunction. When a sensor is being monitored, the next sensor or component will not be monitored until the sensor monitoring is finished.
Required sensor/components	The sensors and components that are used by the ECM to detect malfunctions.
Frequency of operation	The number of times that the ECM checks for malfunctions per driving cycle. ”Once per driving cycle” means that the ECM detects the malfunction only one time during a single driving cycle. ”Continuous” means that the ECM detects malfunction every time an enabling condition is met.
Duration	The minimum time that the ECM must sense a continuous deviation in the monitored value(s) before setting a DTC. This timing begins after the ”typical enabling conditions” are met.
Malfunction thresholds	Beyond this value, the ECM will conclude that there is a malfunction and set a DTC.
MIL operation	MIL illumination timing after a defect is detected. ”Immediately” means that the ECM illuminates MIL the instant the ECM determines that there is a malfunction. ”2 driving cycle” means that the ECM illuminates MIL if the same malfunction is detected again in the 2nd driving cycle.

DIDX7−01

DIAGNOSTIC TROUBLE CODE CHART

HINT:

Parameters listed in the chart may not be exactly the same as your reading due to the type of instrument or other factors.

If a malfunction code is displayed during the DTC check in check mode, check the circuit for the codes listed in the table below. For details of each code, refer to the ”See page” under the respective ’’DTC No.’’ in the DTC chart.

DTC No. (See page)	Detection Item	Trouble Area	MIL*1	Memory
P0010 (DI−70)	Camshaft Position ”A” Actuator Circuit (Bank 1)	• Open or short in OCV circuit • OCV • ECM	○	○
P0011 (DI−76)	Camshaft Position ”A” −Timing Over− Advanced or System Performance (Bank 1)	• Valve timing • OCV • VVT controller assembly • ECM	○	○
P0012 (DI−76)	Camshaft Position ”A” −Timing Over− Retarded (Bank 1)	• Valve timing • OCV • VVT controller assembly • ECM	○	○
P0016 (DI−81)	Crankshaft Position − Camshaft Position Correlation (Bank 1 Sensor A)	• Open or short in VVT sensor circuit • VVT sensor • ECM	○	○
P0018 (DI−81)	Crankshaft Position − Camshaft Position Correlation (Bank 2 Sensor A)	• Open or short in VVT sensor circuit • VVT sensor • ECM	○	○
P0020 (DI−70)	Camshaft Position ”A” Actuator Circuit (Bank 2)	• Open or short in OCV circuit • OCV • ECM	○	○
P0021 (DI−76)	Camshaft Position ”A” −Timing Over− Advanced or System Performance (Bank 2)	• Valve timing • OCV • VVT controller assembly • ECM	○	○
P0022 (DI−76)	Camshaft Position ”A” −Timing Over− Retarded (Bank 2)	• Valve timing • OCV • VVT controller assembly • ECM	○	○
P0031 (DI−84)	Oxygen (A/F) Sensor Heater Control Circuit Low (Bank 1 Sensor 1)	• Open in heater circuit of A/F sensor • A/F sensor heater • A/F relay • ECM	○	○
P0032 (DI−84)	Oxygen (A/F) Sensor Heater Control Circuit High (Bank 1 Sensor 1)	• Short in heater circuit of A/F sensor • A/F sensor heater • A/F relay • ECM	○	○
P0037 (DI−90)	Oxygen Sensor Heater Control Circuit Low (Bank 1 Sensor 2)	• Open in heater circuit of heated oxygen sensor • Heated oxygen sensor heater • EFI relay • ECM	○	○
P0038 (DI−90)	Oxygen Sensor Heater Control Circuit High (Bank 1 Sensor 2)	• Short in heater circuit of heated oxygen sensor • Heated oxygen sensor heater • EFI relay • ECM	○	○

P0051 (DI−84)	Oxygen (A/F) Sensor Heater Control Circuit Low (Bank 2 Sensor 1)	• Open in heater circuit of A/F sensor • A/F sensor heater • A/F relay • ECM	○	○
P0052 (DI−84)	Oxygen (A/F) Sensor Heater Control Circuit High (Bank 2 Sensor 1)	• Short in heater circuit of A/F sensor • A/F sensor heater • A/F relay • ECM	○	○
P0057 (DI−90)	Oxygen Sensor Heater Control Circuit Low (Bank 2 Sensor 2)	• Open in heater circuit of heated oxygen sensor • Heated oxygen sensor heater • EFI relay • ECM	○	○
P0058 (DI−90)	Oxygen Sensor Heater Control Circuit High (Bank 2 Sensor 2)	• Short in heater circuit of heated oxygen sensor • Heated oxygen sensor heater • EFI relay • ECM	○	○
P0100 (DI−98)	Mass or Volume Air Flow Circuit	• Open or short in mass air flow meter circuit • Mass air flow meter • ECM	○	○
P0101 (DI−106)	Mass or Volume Air Flow Circuit Range/Performance Problem	• Mass air flow meter	○	○
P0102 (DI−98)	Mass or Volume Air Flow Circuit Low Input	• Open or short in mass air flow meter circuit • Mass air flow meter • ECM	○	○
P0103 (DI−98)	Mass or Volume Air Flow Circuit High Input	• Open or short in mass air flow meter circuit • Mass air flow meter • ECM	○	○
P0110 (DI−109)	Intake Air Temperature Circuit	• Open or short in intake air temperature sensor circuit • Intake air temperature sensor (built in mass air flow meter) • ECM	○	○
P0112 (DI−109)	Intake Air Temperature Circuit Low Input	• Open or short in intake air temperature sensor circuit • Intake air temperature sensor (built in mass air flow meter) • ECM	○	○
P0113 (DI−109)	Intake Air Temperature Circuit High Input	• Open or short in intake air temperature sensor circuit • Intake air temperature sensor (built in mass air flow meter) • ECM	○	○
P0115 (DI−115)	Engine Coolant Temperature Circuit	• Open or short in engine coolant temperature sensor circuit • Engine coolant temperature sensor • ECM	○	○
P0116 (DI−121)	Engine Coolant Temperature Circuit Range/Performance Problem	• Engine coolant temperature sensor	○	○
P0117 (DI−115)	Engine Coolant Temperature Circuit Low Input	• Open or short in engine coolant temperature sensor circuit • Engine coolant temperature sensor • ECM	○	○
P0118 (DI−115)	Engine Coolant Temperature Circuit High Input	• Open or short in engine coolant temperature sensor circuit • Engine coolant temperature sensor • ECM	○	○
P0120 (DI−123)	Throttle Pedal Position Sensor/ Switch ”A” Circuit	• Open or short in throttle control motor and sensor circuit • Throttle control motor and sensor • ECM	○	○
P0121 (DI−133)	Throttle/Pedal Position Sensor/ Switch ”A” Circuit Range/Performance Problem	• Throttle control motor and sensor	○	○

P0122 (DI−123)	Throttle/Pedal Position Sensor/ Switch "A" Circuit Low Input	• Short in throttle control motor and sensor circuit • Throttle control motor and sensor • Short in VTA1 circuit • Open in VC circuit • ECM	○	○
P0123 (DI−123)	Throttle/Pedal Position Sensor/ Switch "A" Circuit High Input	• Open in throttle control motor and sensor circuit • Throttle control motor and sensor • Open in VTA1 circuit • Open in E2 circuit • VC and VTA1 circuit are short−circuited • ECM	○	○
P0125 (DI−135)	Insufficient Coolant Temperature for Closed Loop Fuel Control	• Cooling system • Engine coolant temperature sensor • Thermostat	○	○
P0128 (DI−138)	Coolant Thermostat (Coolant Temperature Below Thermostat Regulating Temperature)	• Thermostat • Cooling system • Engine coolant temperature sensor • ECM	○	○
P0136 (DI−142)	Oxygen Sensor Circuit Malfunction (Bank 1 Sensor 2)	• Open or short in heated oxygen sensor circuit • Heated oxygen sensor • Heated oxygen sensor heater • EFI relay	○	○
P0137 (DI−142)	Oxygen Sensor Circuit Low Voltage (Bank 1 Sensor 2)	• Open in heated oxygen sensor circuit • Heated oxygen sensor • Heated oxygen sensor sensor heater • EFI relay • Gas leakage from exhaust system	○	○
P0138 (DI−142)	Oxygen Sensor Circuit High Voltage (Bank 1 Sensor 2)	• Short in heated oxygen sensor circuit • Short in heated oxygen sensor • ECM internal circuit malfunction	○	○
P0156 (DI−142)	Oxygen Sensor Circuit Malfunction (Bank 2 Sensor 2)	• Open or short in heated oxygen sensor circuit • Heated oxygen sensor • Heated oxygen sensor heater • EFI relay	○	○
P0157 (DI−142)	Oxygen Sensor Circuit Low Voltage (Bank 2 Sensor 2)	• Open in heated oxygen sensor (sensor 2) circuit • Heated oxygen sensor (sensor 2) • Heated oxygen sensor heater (sensor 2) • EFI relay • Gas leakage from exhaust system	○	○
P0158 (DI−142)	Oxygen Sensor Circuit High Voltage (Bank 2 Sensor 2)	• Short in heated oxygen sensor (sensor 2) circuit • Short in heated oxygen sensor (sensor 2) • ECM internal circuit malfunction	○	○
P0171 (DI−160)	System too Lean (Bank 1)	• Air induction system • Injector blockage • Mass air flow meter • Engine coolant temperature sensor • Fuel pressure • Gas leakage on exhaust system • Open or short in heated oxygen sensor (bank 1 sensor 1) circuit • Heated oxygen sensor (bank 1 sensor 1) • Heated oxygen sensor heater • EFI relay • PCV piping • ECM	○	○

P0172 (DI−160)	System too Rich (Bank 1)	• Injector leak, blockage • Mass air flow meter • Engine coolant temperature sensor • Ignition system • Fuel pressure • Gas leakage in exhaust system • Open or short in heated oxygen sensor (bank 1 sensor 1) circuit • Heated oxygen sensor (bank 1 sensor 1) • ECM	○	○
P0174 (DI−160)	System too Lean (Bank 2)	• Air induction system • Injector blockage • Mass air flow meter • Engine coolant temperature sensor • Fuel pressure • Gas leakage in exhaust system • Open or short in heated oxygen sensor (bank 2 sensor 1) circuit • Heated oxygen sensor (bank 2 sensor 1) • Heated oxygen sensor heater • EFI relay • PCV piping • ECM	○	○
P0175 (DI−160)	System too Rich (Bank 2)	• Injector leak, blockage • Mass air flow meter • Engine coolant temperature sensor • Ignition system • Fuel pressure • Gas leakage in exhaust system • Open or short in heated oxygen sensor (bank 2 sensor 1) circuit • Heated oxygen sensor (bank 2 sensor 1) • ECM	○	○
P0220 (DI−123)	Throttle/Pedal Position Sensor/ Switch ”B” Circuit	• Throttle control motor and sensor • ECM	○	○
P0222 (DI−123)	Throttle/Pedal Position Sensor/ Switch ”B” Circuit Low Input	• Throttle control motor and sensor • Short in VTA2 circuit • Open in VC circuit • ECM	○	○
P0223 (DI−123)	Throttle/Pedal Position Sensor/ Switch ”B” Circuit High Input	• Throttle control motor and sensor • Open in VTA2 circuit • Open in E2 circuit • VC and VTA2 circuit are short−circuited • ECM	○	○
P0230 (DI−174)	Fuel Pump Primary Circuit	• Open or short in fuel pump relay circuit • Fuel pump relay • Circuit opening relay • Fuel pump • ECM	−	○

P0300 (DI−179)	Random/Multiple Cylinder Misfire Detected	• Open or short in engine wire • Connector connection • Vacuum hose connection • Ignition system • Injector • Fuel pressure • Mass air flow meter • Engine coolant temperature sensor • Compression pressure • Valve clearance • Valve timing • PCV piping • ECM	○*2	○
P0301 (DI−179)	Cylinder 1 Misfire Detected	• Open or short in engine wire • Connector connection • Vacuum hose connection • Ignition system • Injector • Fuel pressure • Mass air flow meter • Engine coolant temperature sensor • Compression pressure • Valve clearance • Valve timing • PCV piping • ECM	○*2	○
P0302 (DI−179)	Cylinder 2 Misfire Detected	• Open or short in engine wire • Connector connection • Vacuum hose connection • Ignition system • Injector • Fuel pressure • Mass air flow meter • Engine coolant temperature sensor • Compression pressure • Valve clearance • Valve timing • PCV piping • ECM	○*2	○
P0303 (DI−179)	Cylinder 3 Misfire Detected	• Open or short in engine wire • Connector connection • Vacuum hose connection • Ignition system • Injector • Fuel pressure • Mass air flow meter • Engine coolant temperature sensor • Compression pressure • Valve clearance • Valve timing • PCV piping • ECM	○*2	○

P0304 (DI−179)	Cylinder 4 Misfire Detected	• Open or short in engine wire • Connector connection • Vacuum hose connection • Ignition system • Injector • Fuel pressure • Mass air flow meter • Engine coolant temperature sensor • Compression pressure • Valve clearance • Valve timing • PCV piping • ECM	○*2	○
P0305 (DI−179)	Cylinder 5 Misfire Detected	• Open or short in engine wire • Connector connection • Vacuum hose connection • Ignition system • Injector • Fuel pressure • Mass air flow meter • Engine coolant temperature sensor • Compression pressure • Valve clearance • Valve timing • PCV piping • ECM	○*2	○
P0306 (DI−179)	Cylinder 6 Misfire Detected	• Open or short in engine wire • Connector connection • Vacuum hose connection • Ignition system • Injector • Fuel pressure • Mass air flow meter • Engine coolant temperature sensor • Compression pressure • Valve clearance • Valve timing • PCV piping • ECM	○*2	○
P0327 (DI−197)	Knock Sensor 1 Circuit Low Input (Bank 1 or Single Sensor)	• Short in knock sensor circuit • Knock sensor • ECM	○	○
P0328 (DI−197)	Knock Sensor 1 Circuit High Input (Bank 1 or Single Sensor)	• Open in knock sensor circuit • Knock sensor • ECM	○	○
P0332 (DI−197)	Knock Sensor 2 Circuit Low Input (Bank 2)	• Short in knock sensor circuit • Knock sensor • ECM	○	○
P0333 (DI−197)	Knock Sensor 2 Circuit High Input (Bank 2)	• Open in knock sensor circuit • Knock sensor • ECM	○	○
P0335 (DI−203)	Crankshaft Position Sensor ”A” Circuit	• Open or short in crankshaft position sensor circuit • Crankshaft position sensor • Signal plate • ECM	○	○

P0339 (DI−203)	Crankshaft Position Sensor ”A” Circuit Intermittent	• Open or short in crankshaft position sensor circuit • Crankshaft position sensor • Signal plate • ECM	−	○
P0340 (DI−209)	Camshaft Position Sensor ”A” Circuit (Bank 1 or Single Sensor)	• Open or short in camshaft position sensor circuit • Camshaft position sensor • LH camshaft timing pulley • Jumping teeth of timing belt • ECM	○	○
P0342 (DI−209)	Camshaft Position Sensor ”A” Circuit (Bank 1 or Single Sensor)	Same as DTC P0340	○	○
P0343 (DI−209)	Camshaft Position Sensor ”A” Circuit (Bank 1 or Single Sensor)	Same as DTC P0340	○	○
P0345 (DI−209)	Camshaft Position Sensor ”A” Circuit (Bank 2)	Same as DTC P0340	○	○
P0347 (DI−209)	Camshaft Position Sensor ”A” Circuit (Bank 2)	Same as DTC P0340	○	○
P0348 (DI−209)	Camshaft Position Sensor ”A” Circuit (Bank 2)	Same as DTC P0340	○	○
P0351 (DI−216)	Ignition Coil ”A” Primary/Secondary Circuit	• Open or short in IGF 1 and IGT 1 circuit from No. 1 ignition coil with igniter to ECM • No. 1 ignition coil with igniter • Ignition system • ECM	○	○
P0352 (DI−216)	Ignition Coil ”B” Primary/Secondary Circuit	• Open or short in IGF 1 and IGT 2 circuit from No. 2 ignition coil with igniter to ECM • No. 2 ignition coil with igniter • Ignition system • ECM	○	○
P0353 (DI−216)	Ignition Coil ”C” Primary/Secondary Circuit	• Open or short in IGF 1 and IGT 3 circuit from No. 3 ignition coil with igniter to ECM • No. 3 ignition coil with igniter • Ignition system • ECM	○	○
P0354 (DI−216)	Ignition Coil ”D” Primary/Secondary Circuit	• Open or short in IGF 1 and IGT 4 circuit from No. 4 ignition coil with igniter to ECM • No. 4 ignition coil with igniter • Ignition system • ECM	○	○
P0355 (DI−216)	Ignition Coil ”E” Primary/Secondary Circuit	• Open or short in IGF 1 and IGT 5 circuit from No. 5 ignition coil with igniter to ECM • No. 5 ignition coil with igniter • Ignition system • ECM	○	○
P0356 (DI−216)	Ignition Coil ”F” Primary/Secondary Circuit	• Open or short in IGF 1 and IGT 6 circuit from No. 6 ignition coil with igniter to ECM • No. 6 ignition coil with igniter • Ignition system • ECM	○	○
P0420 (DI−228)	Catalyst System Efficiency Below Threshold (Bank 1)	• Gas leakage on exhaust system • Heated oxygen sensor (bank 1 sensor 1, 2) • Three−way catalytic converter	○	○

P0430 (DI−228)	Catalyst System Efficiency Below Threshold (Bank 2)	• Gas leakage on exhaust system • Heated oxygen sensor (bank 2 sensor 1, 2) • Three−way catalytic converter	○	○
P043E (DI−353)	Evaporate Emission System Reference Orifice Clog Up	• Pump module • ECM	○	○
P043F (DI−353)	Evaporate Emission System Reference Orifice High Flow	• Pump module • ECM	○	○
P0441 (DI−236)	Evaporative Emission Control System Incorrect Purge Flow	• Purge valve • Purge valve circuit (between purge valve and ECM) • Leakage from EVAP line (between purge valve and intake manifold) • EVAP line (between purge valve and canister) clogged • ECM	○	○
P0450 (DI−243)	Evaporative Emission Control System Pressure Sensor/Switch [Fuel Tank Pressure Sensor]	• Pump module (including pressure sensor) • ECM	○	○
P0451 (DI−243)	Evaporative Emission Control System Pressure Sensor/Switch Range/Performance	• Pump module (including pressure sensor)	○	○
P0452 (DI−243)	Evaporative Emission Control System Pressure Sensor/Switch Low Input	• Pump module (including pressure sensor) • Connector/Wire harness (between pump module and ECM) • ECM	○	○
P0453 (DI−243)	Evaporative Emission Control System Pressure Sensor/Switch High Input	• Pump module (include pressure sensor) • Connector/Wire harness (between pump module and ECM) • ECM	○	○
P0455 (DI−252)	Evaporative Emission Control System Leak Detected (Gross Leak)	• Fuel tank cap (loose) • Leakage from EVAP line (between canister and fuel tank) • Leakage from EVAP line (between purge valve and canister) • Leakage from pump module • Leakage from fuel tank • Leakage from canister	○	○
P0456 (DI−252)	Evaporative Emission Control System Leak Detected (Very Small Leak)	• Same as DTC No. P0445	○	○
P0500 (DI−257)	Vehicle Speed Sensor ”A”	• Combination meter • Open or short in vehicle speed sensor circuit • Vehicle speed sensor • ECM	○	○
P0503 (DI−257)	Vehicle Speed Sensor ”A” Intermittent/Erratic/High	• Combination meter • Open or short in vehicle speed sensor circuit • Vehicle speed sensor • ECM	−	○
P0504 (DI−261)	Brake Switch ”A”/”B” Correlation	• Short in stop lamp switch signal circuit • STOP fuse • Stop lamp switch • ECM	−	○
P0505 (DI−266)	Idle Air Control System	• Air induction system • Electric throttle control system • PCV hose connection	○	○
P050A (DI−269−1)	Cold Start Idle Air Control System Performance	• ETCS (Electronic Throttle Control System) • Air induction system • PCV hose connections • ECM	○	○

P050B (DI−269−1)	Cold Start Ignition Timing Performance	• ETCS (Electronic Throttle Control System) • Air induction system • PCV hose connections • ECM	○	○
P0560 (DI−270)	System Voltage	• Back−up power source circuit • EFI No. 1 fuse • ECM	○	○
P0604 (DI−274)	Internal Control Module Random Access Memory (RAM) Error	• ECM	○	○
P0606 (DI−274)	ECM/PCM Processor	• ECM	○	○
P0607 (DI−274)	Control Module Performance	• ECM	○	○
P0617 (DI−276)	Starter Relay Circuit High	• Park/neutral position switch • Starter relay circuit • Ignition switch • ECM	○	○
P0630 (DI−281)	VIN not Programmed or Mis-match−ECM/PCM	• ECM	○	○
P0657 (DI−274)	Actuator Supply Voltage Circuit/ Open	• ECM	○	○
P0705 (DI−993)	Transmission Range Sensor Cir-cuit Malfunction (PRNDL Input)	• Electronic Controlled Automatic Transaxle (ECT)	○	○
P0710 (DI−999)	Transmission Fluid Temperature Sensor ”A” Circuit	• Electronic control automatic transmission (ECT)	○	○
P0711 (DI−1005)	Transmission Fluid Temperature Sensor ”A” Performance	• Electronic control automatic transmission (ECT)	○	○
P0712 (DI−999)	Transmission Fluid Temperature Sensor ”A” Circuit Low Input	• Electronic control automatic transmission (ECT)	○	○
P0713 (DI−999)	Transmission Fluid Temperature Sensor ”A” Circuit High Input	• Electronic control automatic transmission (ECT)	○	○
P0717 (DI−1008)	Input/Turbine Speed Sensor ”A” Circuit No Signal	• Electronic control automatic transmission (ECT)	○	○
P0722 (DI−1013)	Output Speed Sensor Circuit No Signal	• Electronic control automatic transmission (ECT)	○	○
P0724 (DI−1017)	Brake Switch ”B” Circuit High	• Electronic control automatic transmission (ECT)	○	○
P0748 (DI−1020)	Pressure Control Solenoid ”A” Electrical (Shift Solenoid Valve SL1)	• Electronic control automatic transmission (ECT)	○	○
P0751 (DI−1025)	Shift Solenoid ”A” Performance (Shift Solenoid Valve S1)	• Electronic control automatic transmission (ECT)	○	○
P0756 (DI−1031)	Shift Solenoid ”B” Performance (Shift Solenoid Valve S2)	• Electronic control automatic transmission (ECT)	○	○
P0771 (DI−1037)	Shift Solenoid ”E” Performance (Shift Solenoid Valve SR)	• Electronic control automatic transmission (ECT)	○	○
P0776 (DI−1042)	Pressure Control Solenoid ”B” Performance (Shift Solenoid Valve SL2)	• Electronic control automatic transmission (ECT)	○	○
P0778 (DI−1048)	Pressure Control Solenoid ”B” Electrical (Shift Solenoid Valve SL2)	• Electronic control automatic transmission (ECT)	○	○

P0781 (DI−1053)	1−2 Shift (1−2 Shift Valve)	• Electronic control automatic transmission (ECT)	○	○
P0973 (DI−1058)	Shift Solenoid ”A” Control Circuit Low (Shift solenoid Valve S1)	• Electronic control automatic transmission (ECT)	○	○
P0974 (DI−1058)	Shift Solenoid ”A” Control Circuit High (Shift solenoid Valve S1)	• Electronic control automatic transmission (ECT)	○	○
P0976 (DI−1063)	Shift Solenoid ”B” Control Circuit Low (Shift solenoid Valve S2)	• Electronic control automatic transmission (ECT)	○	○
P0977 (DI−1063)	Shift Solenoid ”B” Control Circuit High (Shift solenoid Valve S2)	• Electronic control automatic transmission (ECT)	○	○
P0985 (DI−1068)	Shift Solenoid ”E” Control Circuit Low (Shift Solenoid Valve SR)	• Electronic control automatic transmission (ECT)	○	○
P0986 (DI−1068)	Shift Solenoid ”E” Control Circuit High (Shift Solenoid Valve SR)	• Electronic control automatic transmission (ECT)	○	○
P2102 (DI−283)	Throttle Actuator Control Motor Circuit Low	• Open in throttle control motor and sensor circuit • Throttle control motor and sensor • ECM	○	○
P2103 (DI−283)	Throttle Actuator Control Motor Circuit High	• Short in throttle control motor and sensor circuit • Throttle control motor and sensor • Throttle valve • Throttle body • ECM	○	○
P2111 (DI−287)	Throttle Actuator Control System − Stuck Open	• Throttle control motor and sensor circuit • Throttle control motor and sensor • Throttle valve • Throttle body	○	○
P2112 (DI−287)	Throttle Actuator Control System − Stuck Closed	• Throttle control motor and sensor circuit • Throttle control motor and sensor • Throttle valve • Throttle body	○	○
P2118 (DI−291)	Throttle Actuator Control Motor Current Range/Performance	• Open in throttle control motor and sensor power source circuit • ETCS fuse • ECM	○	○
P2119 (DI−296)	Throttle Actuator Control Throttle Body Range/Performance	• Electric throttle control system • Throttle body	○	○
P2120 (DI−299)	Throttle/Pedal Position Sensor/ Switch ”D” Circuit	• Open or short in accelerator pedal position sensor circuit • Accelerator pedal position sensor • ECM	○	○
P2121 (DI−309)	Throttle/Pedal Position Sensor/ Switch ”D” Circuit Range/Performance	• Accelerator pedal position sensor	○	○
P2122 (DI−299)	Throttle/Pedal Position Sensor/ Switch ”D” Circuit Low Input	• Open in accelerator pedal position sensor circuit • Accelerator pedal position sensor • VCPA circuit open • VPA circuit open or ground short • ECM	○	○
P2123 (DI−299)	Throttle/Pedal Position Sensor/ Switch ”D” Circuit High Input	• Short in accelerator pedal position sensor circuit (+B circuit) • Accelerator pedal position sensor • EPA circuit open • ECM	○	○
P2125 (DI−299)	Throttle/Pedal Position Sensor/ Switch ”E” Circuit	• Open or short in accelerator pedal position sensor circuit • Accelerator pedal position sensor • ECM	○	○

P2127 (DI−299)	Throttle/Pedal Position Sensor/ Switch "E" Circuit Low Input	• Open in accelerator pedal position sensor circuit • Accelerator pedal position sensor • VCP2 circuit open • VPA2 circuit open or ground short • ECM	○	○
P2128 (DI−299)	Throttle/Pedal Position Sensor/ Switch "E" Circuit High Input	• Short in accelerator pedal position sensor circuit (+B circuit) • Accelerator pedal position sensor • EPA circuit open • ECM	○	○
P2135 (DI−123)	Throttle/Pedal Position Sensor/ Switch "A" / "B" Voltage Correlation	• Throttle control motor and sensor • VTA1 and VTA2 circuit are short−circuited • ECM	○	○
P2138 (DI−299)	Throttle/Pedal Position Sensor/ Switch "D" / "E" Voltage Correlation	• Open or short in accelerator pedal position sensor circuit • Accelerator pedal position sensor • VPA and VPA2 circuit are short circuited • ECM	○	○
P2195 (DI−312)	Oxygen (A/F) Sensor Signal Stuck Lean (Bank 1 Sensor 1)	• Open or short in A/F sensor (sensor 1) circuit • A/F sensor (sensor 1) • A/F sensor heater (sensor 1) • A/F relay • A/F sensor heater and EFI relay circuits • Air induction system • Fuel pressure • Injector • ECM	○	○
P2196 (DI−312)	Oxygen (A/F) Sensor Signal Stuck Rich (Bank 1 Sensor 1)	• Open or short in A/F sensor (sensor 1) circuit • A/F sensor (sensor 1) • A/F sensor heater (sensor 1) • A/F relay • A/F sensor heater and EFI relay circuits • Air induction system • Fuel pressure • Injector • ECM	○	○
P2197 (DI−312)	Oxygen (A/F) Sensor Signal Stuck Lean (Bank 2 Sensor 1)	• Open or short in A/F sensor (sensor 1) circuit • A/F sensor (sensor 1) • A/F sensor heater (sensor 1) • A/F relay • A/F sensor heater and EFI relay circuits • Air induction system • Fuel pressure • Injector • ECM	○	○
P2198 (DI−312)	Oxygen (A/F) Sensor Signal Stuck Rich (Bank 2 Sensor 1)	• Open or short in A/F sensor (sensor 1) circuit • A/F sensor (sensor 1) • A/F sensor heater (sensor 1) • A/F relay • A/F sensor heater and EFI relay circuits • Air induction system • Fuel pressure • Injector • ECM	○	○
P2238 (DI−330)	Oxygen Sensor Pumping Current Circuit Low (For A/F Sensor) (Bank 1 Sensor 1)	• Open or short in A/F sensor (sensor 1) circuit • A/F sensor (sensor 1) • A/F sensor heater (sensor 1) • A/F relay • A/F sensor heater and EFI relay circuits	○	○

P2239 (DI−330)	Oxygen Sensor Pumping Current Circuit High (For A/F Sensor) (Bank 1 Sensor 1)	• Open or short in A/F sensor (sensor 1) circuit • A/F sensor (sensor 1) • A/F sensor heater (sensor 1) • A/F relay • A/F sensor heater and EFI relay circuits	○	○
P2241 (DI−330)	Oxygen Sensor Pumping Current Circuit Low (For A/F Sensor) (Bank 2 Sensor 1)	• Open or short in A/F sensor (sensor 1) circuit • A/F sensor (sensor 1) • A/F sensor heater (sensor 1) • A/F relay • A/F sensor heater and EFI relay circuits	○	○
P2242 (DI−330)	Oxygen Sensor Pumping Current Circuit High (For A/F Sensor) (Bank 2 Sensor 1)	• Open or short in A/F sensor (sensor 1) circuit • A/F sensor (sensor 1) • A/F sensor heater (sensor 1) • A/F relay • A/F sensor heater and EFI relay circuits	○	○
P2252 (DI−330)	Oxygen Sensor Reference Ground Current Circuit Low (For A/F Sensor) (Bank 1 Sensor 1)	• Open or short in A/F sensor (sensor 1) circuit • A/F sensor (sensor 1) • A/F sensor heater (sensor 1) • A/F relay • A/F sensor heater and EFI relay circuits	○	○
P2253 (DI−330)	Oxygen Sensor Reference Current Circuit High (For A/F Sensor) (Bank 1 Sensor 1)	• Open or short in A/F sensor (sensor 1) circuit • A/F sensor (sensor 1) • A/F sensor heater (sensor 1) • A/F relay • A/F sensor heater and EFI relay circuits	○	○
P2255 (DI−330)	Oxygen Sensor Reference Ground Current Circuit Low (For A/F Sensor) (Bank 2 Sensor 1)	• Open or short in A/F sensor (sensor 1) circuit • A/F sensor (sensor 1) • A/F sensor heater (sensor 1) • A/F relay • A/F sensor heater and EFI relay circuits	○	○
P2256 (DI−330)	Oxygen Sensor Reference Current Circuit High (For A/F Sensor) (Bank 2 Sensor 1)	• Open or short in A/F sensor (sensor 1) circuit • A/F sensor (sensor 1) • A/F sensor heater (sensor 1) • A/F relay • A/F sensor heater and EFI relay circuits	○	○
P2401 (DI−339)	Evaporative Emission System Leak Detection Pump Control Circuit Low	• Pump module • Connector/Wire harness (between pump module and ECM) • ECM	○	○
P2402 (DI−339)	Evaporative Emission System Leak Detection Pump Control Circuit High	• Pump module • Connector/Wire harness (between pump module and ECM) • ECM	○	○
P2419 (DI−345)	Evaporate Emission System Switching Valve Control Circuit Low	• Pump module • Connector/Wire harness (between pump module and ECM) • ECM	○	○
P2420 (DI−345)	Evaporate Emission System Switching Valve Control Circuit High	• Pump module • Connector/Wire harness (between pump module and ECM) • ECM	○	○
P2610 (DI−351)	ECM/PCM Internal Engine Off Timer Performance	• ECM	○	○
P2714 (DI−1073)	Pressure Control Solenoid ”D” Performance (Shift Solenoid Valve SLT)	• Electronic control automatic transmission (ECT)	○	○
P2716 (DI−1079)	Pressure Control Solenoid ”D” Electrical (Shift Solenoid Valve SLT)	• Electronic control automatic transmission (ECT)	○	○
P2740 (DI−1083)	Transmission Fluid Temperature Sensor ”B” Circuit	• Electronic control automatic transmission (ECT)	○	○

P2742 (DI–1083)	Transmission Fluid Temperature Sensor ”B” Circuit Low Input	• Electronic control automatic transmission (ECT)	○	○
P2743 (DI–1083)	Transmission Fluid Temperature Sensor ”B” Circuit High Input	• Electronic control automatic transmission (ECT)	○	○
P2757 (DI–1089)	Torque Converter clutch Pressure Control Solenoid Performance (Shift Solenoid Valve SLU)	• Electronic control automatic transmission (ECT)	○	○
P2759 (DI–1097)	Torque Converter clutch Pressure Control Solenoid Electrical (Shift Solenoid Valve SLU)	• Electronic control automatic transmission (ECT)	○	○
P2A00 (DI–359)	A/F Sensor Circuit Slow Response (Bank 1 Sensor 1)	• Open or short in A/F sensor (sensor 1) circuit • A/F sensor (sensor 1) • A/F sensor heater (sensor 1) • EFI relay • A/F sensor heater and EFI relay circuits • Air induction system • Fuel pressure • Injector • PCV valve and hose • PCV hose connections • ECM	○	○
P2A03 (DI–359)	A/F Sensor Circuit Slow Response (Bank 2 Sensor 1)	• Open or short in A/F sensor (sensor 1) circuit • A/F sensor (sensor 1) • A/F sensor heater (sensor 1) • EFI relay • A/F sensor heater and EFI relay circuits • Air induction system • Fuel pressure • Injector • PCV valve and hose • PCV hose connections • ECM	○	○

*1: – .... MIL does not light up. ○ .... MIL lights up.
*2: MIL lights up or blinks.

DIDT2−01

FAIL−SAFE CHART

If any of the following code is recorded, the ECM enters fail−safe mode.

DTC No.	Fail−Safe Operation	Fail−Safe Deactivation Conditions
P0031 P0032 P0037 P0038 P0051 P0052 P0057 P0058	The heater circuit in which an abnormality is detected is turned off	Ignition switch OFF
P0100 P0102 P0103	Ignition timing is calculated from engine speed and throttle angle	”Pass” condition detected
P0110 P0112 P0113	Intake air temperature is fixed at 20°C (68°F)	”Pass” condition detected
P0115 P0117 P0118	Engine coolant temperature is fixed at 80°C (176°F)	”Pass” condition detected
P0120 P0121 P0122 P0123 P0220 P0222 P0223 P0606 P0607 P0657 P2102 P2103 P2111 P2112 P2118 P2119 P2135	If the Electronic Throttle Control System (ETCS) has a malfunction, the ECM cuts off current to the throttle control motor. The throttle control valve returns to a predetermined opening angle (approximately 16°) by the force of the return spring. The ECM then adjusts the engine output by controlling the fuel injection (intermittent fuel−cut) and ignition timing in accordance with the accelerator pedal opening angle to enable the vehicle to continue at a minimal speed. If the accelerator pedal is depressed firmly and slowly, the vehicle can be driven slowly. If the accelerator pedal is depressed quickly, the vehicle may speed up and slow down erratically.	”Pass” condition is detected and then the ignition switch is turned OFF.

P0351 P0352 P0353 P0354 P0355 P0356 P0357 P0358	Fuel cut	”Pass” condition detected
P2120 P2121 P2122 P2123 P2125 P2127 P2128 P2138	The accelerator pedal position sensor has two (main and sub) sensor circuits. If a malfunction occurs in either of the sensor circuits, the ECM detects the abnormal signal voltage difference between the two sensor circuits and switches to limp mode. In limp mode, the remaining circuit is used to calculate the accelerator pedal opening to allow the vehicle to continue driving. If both circuits malfunction, the ECM regards the opening angle of the accelerator pedal to be fully closed. In this case, the throttle valve will remain closed as if the engine is idling.	”Pass” condition is detected and the ignition switch is turned OFF.

DIDSP−01

HOW TO PROCEED WITH TROUBLESHOOTING

Troubleshoot in accordance with the procedure on the following page.

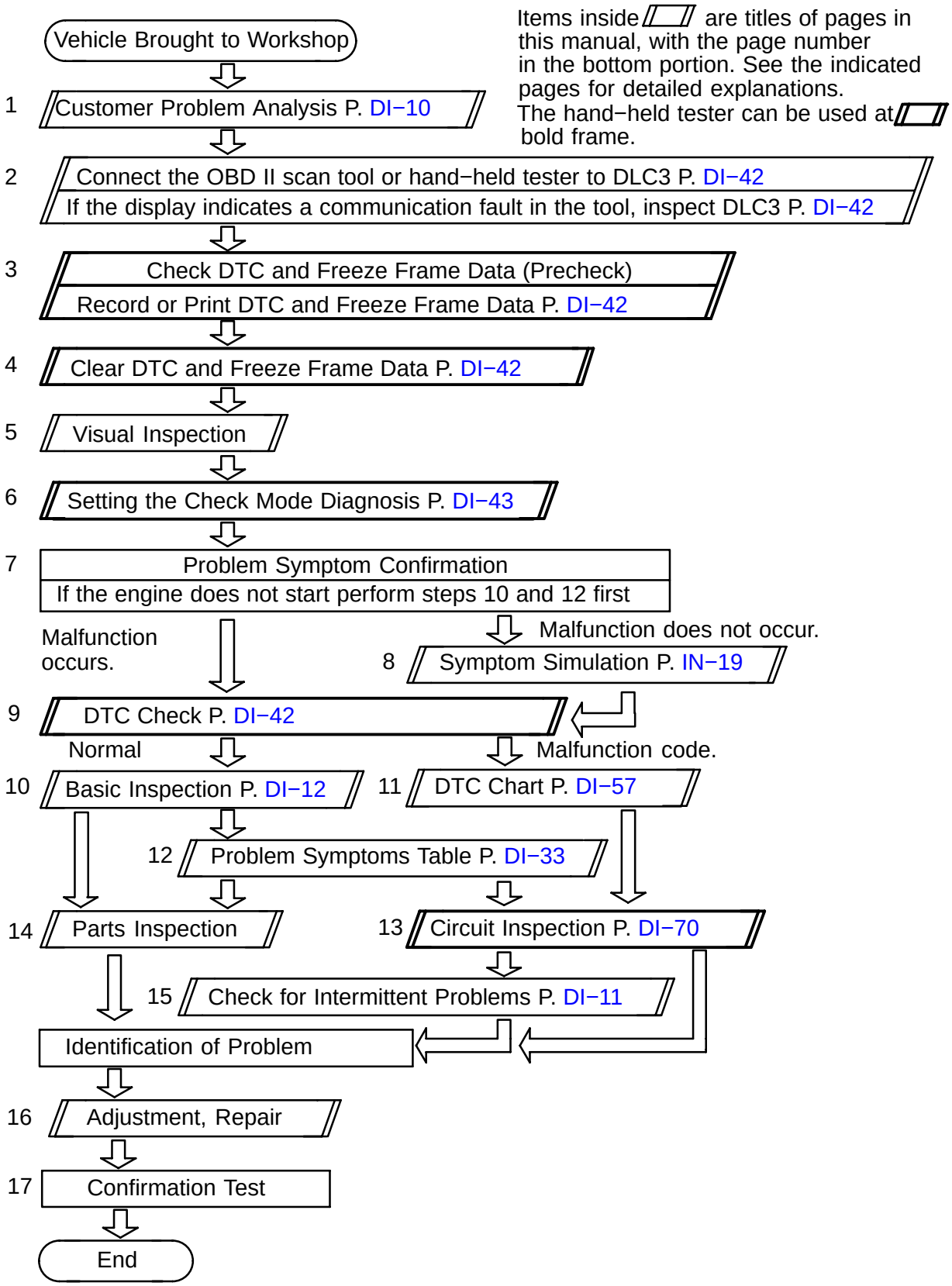

DIDSO–01

LOCATION

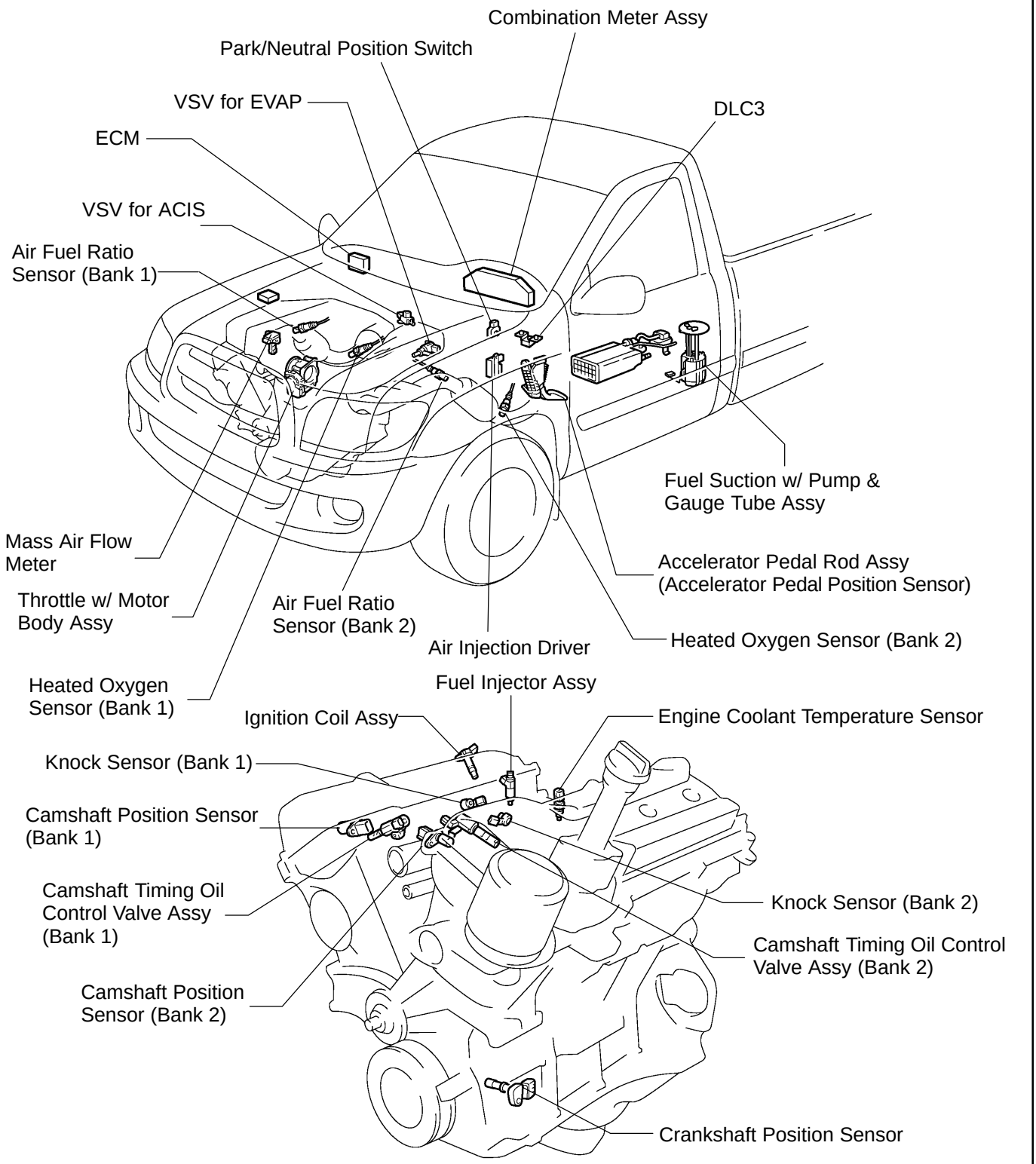

DIDSU−01

LIST OF DISABLE A MONITOR

HINT:

This table indicates ECM monitoring status for the items in the upper columns if the DTCs in each line on the left are being set.

As for the ”X” mark, when the DTC on the left is stored, detection of the DTC in the upper column is not performed.

Monitor detected malfunction

Fault code	Fault code	Component/ system	Monitor disablement (X - disabled)																										
			P0010,P0020	P0011	P0012	P0016,P0018	P0021	P0022	P0030,50	P0135,P0155	P0036,56	P0043,44,63,64	P0100	P0101	P0105	P0106	P0110	P0115	P0116	P0120,P0121	P0125	P0128	P0130-P0153	P0134,P0154	P0136,P0156	P0142,P0162	P0171,P0172	P0300-P0308
			P0010,P0020	P0011	P0012	P0016,P0018	P0021	P0022	P0031,32,51,52	P0031,32,51,52	P0037,38,57,58	P0043,44,63,64	P0100-P0103	P0101	P0105-P0108	P0106	P0110-P0113	P0115-P0118	P0116	P0120-P0223,P2135	P0125	P0128	P0130-P0153	P0134,P0154	P0136,P0156	P0142,P0162	P0171,P0172	P0300-P0308
			VVT VSV1,2	VVT System1 -Advance	VVT System1 - Retard	VVT System - Misalignment	VVT System2 - Advance	VVT System2 - Retard	O2 Sensor Heater - Sensor1	A/F Sensor Heater - Sensor1	O2 Sensor Heater - Sensor2	O2 Sensor Heater - Sensor3	MAF sensor	MAF sensor	MAP sensor	MAP sensor	IAT sensor	ECT sensor	ECT sensor	TP sensor	Insufficient ECT for Closed Loop	Thermostat	O2 Sensor -Sensor1	O2 Sensor, A/F Sensor(No Activity) - Sensor1	O2 Sensor - Sensor2	O2 Sensor - Sensor3	Fuel system	Misfire
P0010,P0020	P0010,P0020	VVT VSV1,2																				X							
P0011	P0011	VVT System1 - Advance				X		X														X					X		
P0012	P0012	VVT System1 - Retard				X		X														X					X		
P0016,P0018	P0016,P0018	VVT System - Misalignment																											
P0021	P0021	VVT System2 - Advance			X	X																X					X		
P0022	P0022	VVT System2 - Retard			X																	X					X		
P0030,50	P0031,32,51,52	O2 Sensor Heater - Sensor1																				X	X	X	X	X	X		
P0135,P0155	P0031,32,51,52	A/F Sensor Heater - Sensor1																				X			X	X	X		
P0036,56	P0037,38,57,58	O2 Sensor Heater - Sensor2																							X	X			
P0043,44,63,64	P0043,44,63,64	O2 Sensor Heater - Sensor3																								X			
P0100,P0101	P0100-P0103	MAF sensor		X	X		X	X											X		X	X	X	X	X	X	X	X	X
P0105,P0106	P0105-P0108	MAP sensor		X	X		X	X											X		X	X	X	X	X	X	X	X	X
P0110	P0110-P0113	IAT sensor																			X	X	X	X	X	X			X
P0115,P0116	P0115-P0118	ECT sensor		X	X	X	X	X						X		X					X	X	X	X	X	X	X	X	X
P0120,P0121	P0120-P0223,P2135	TP sensor												X		X							X	X	X	X	X	X	X
P0125	P0125	Insufficient ECT for Closed Loop		X	X		X	X						X		X						X	X	X	X	X	X	X	X
P0128	P0128	Thermostat																					X						
P0130-P0153	P0130-P0153	O2 Sensor - Sensor1																				X		X	X	X			
P0134,P0154	P0134,P0154	O2 Sensor, A/F Sensor(No Activity) - Sensor1								X												X	X		X	X	X		
P0136,P0156	P0136,P0156	O2 Sensor - Sensor2																											
P0142,P0162	P0142,P0162	O2 Sensor - Sensor3																											
P0171,P0172	P0171,P0172	Fuel system																				X	X	X	X	X			
P0300-P0308	P0300-P0308	Misfire							X													X	X	X	X	X			
P0325,P0330	P0325-P0333	Knock sensor																											X
P0335	P0335	CKP sensor		X	X		X	X						X		X						X	X	X	X	X	X	X	X
P0340, P0341	P0340, P0341	CMP sensor		X	X		X	X						X		X						X	X	X	X	X	X	X	X
P0340-P0346	P0340-P0346	VVT sensor1,2																				X							
P0351-P0358	P0351-P0358	Ignitor		X	X		X	X														X							
P0385	P0385	CKP sensor 2												X		X						X	X	X	X	X	X	X	X
P0401	P0401	EGR system (closed)																				X					X		
P0402	P0402	EGR system (open)																				X	X	X	X	X	X		
P0405,P0409	P0405-P0409	Lift sensor																									X		
P0420,P0430	P0420,P0430	Catalyst																											
P0442-P0456	P0442-P0456	EVAP system																					X	X	X	X			
P0450,P0451	P0450-P0453	EVAP press sensor																											

C

A21570

Monitor detected malfunction

Fault code		Component/ system	Monitor disablement (X - disabled)																										
			P0010,P0020	P0011	P0012	P0016,P0018	P0021	P0022	P0030,50	P0135,P0155	P0036,56	P0043,44,63,64	P0100	P0101	P0105	P0106	P0110	P0115	P0116	P0120,P0121	P0125	P0128	P0130-P0153	P0134,P0154	P0136,P0156	P0142,P0162	P0171,P0172	P0300-P0308
	Fault code		P0010,P0020	P0011	P0012	P0016,P0018	P0021	P0022	P0031,32,51,52	P0031,32,51,52	P0037,38,57,58	P0043,44,63,64	P0100-P0103	P0101	P0105-P0108	P0106	P0110-P0113	P0115-P0118	P0116	P0120-P0223,P2135	P0125	P0128	P0130-P0153	P0134,P0154	P0136,P0156	P0142,P0162	P0171,P0172	P0300-P0308
			VVT VSV1,2	VVT System1 -Advance	VVT System1 - Retard	VVT System - Misalignment	VVT System2 - Advance	VVT System2 - Retard	O2 Sensor Heater - Sensor1	A/F Sensor Heater - Sensor1	O2 Sensor Heater - Sensor2	O2 Sensor Heater - Sensor3	MAF sensor	MAF sensor	MAP sensor	MAP sensor	IAT sensor	ECT sensor	ECT sensor	TP sensor	Insufficient ECT for Closed Loop	Thermostat	O2 Sensor -Sensor1	O2 Sensor, A/F Sensor(No Activity) - Sensor1	O2 Sensor - Sensor2	O2 Sensor - Sensor3	Fuel system	Misfire
P0500	P0500	VSS																				X	X	X	X	X	X	X
P0511	P0511	IAC valve																					X					
P0510	P0510	Idle switch												X		X						X	X		X	X	X	X
P0560	P0560	System Voltage																										
P0617	P0617	Starter signal																										
P0705	P0705	Shift lever position switch																										
P0710	P0710-P0713	Trans fluid temp sensor																										
P0720-P0793	P0720-P0793	Output speed sensor																										
P0715-P0717	P0715-P0717	Input speed sensor																										
P0724	P0724	Stop lamp switch																										
P0741-P0796	P0741-P0796	Trans solenoid (function)																										
P0748-P0798	P0748-P0799	Trans solenoid (range)																										
P0850	P0850	PNP switch																										X
P1010,P1020	P1010,P1020	VVTL																				X					X	
P1011,12(,21,22)	P1011,12(,21,22)	VVTL system1(,2)																				X					X	
P1126	P1126	Electronic magnet clutch																										
P1129	P1129	Electronic throttle system																										
P1430	P1430	HC adsorber ACT press sensor																										
P2004,6	P2004,6	Intake Manifold Runner Control																										
P2009,10	P2009,10	Intake Manifold Runner Control Circuit																										
P2014,16,17	P2014,16,17	Intake Manifold Runner Position Sensor																										
P2102,P2103	P2102,P2103	Throttle motor																										
P2120-P2138	P2120-P2138	Accel position sensor																										
P2196,P2198	P2196,P2198	A/F sensor (rationality)																				X			X	X		
P2226	P2226	BARO sensor																					X		X	X		
P2237,P2240	P2237,P2240	A/F sensor (open)																				X			X	X		
P2423,24	P2423,24	HC Adsorption Catalyst																										
P2430,2,3	P2430,2,3	AIR Pressure Sensor(Low/High)																										
P2431	P2431	AIR Pressure Sensor(Rationality)																										
P2440	P2440	AIR control valve stuck open																					X	X	X	X	X	
P2441	P2441	AIR control valve stuck close																					X	X	X	X	X	
P2444	P2444	AIP stuck On																					X	X	X	X	X	
P2445	P2445	AIP stuck Off																					X	X	X	X	X	
P2714-P2759	P2714-P2759	Trans solenoid(SLU-SLD)																										
P2A00,P2A03	P2A00,P2A03	A/F sensor (slow response)																				X			X	X		

C

A21571

Monitor detected malfunction

Fault code	Fault code	Component/system	Monitor disablement (X - disabled)																														
			P0325,P0330	P0335	P0340,P0341	P0340-P0346	P0351-P0358	P0385	P0401	P0402	P0405	P0409	P0420,P0430	P0440-P0446	P0450,P0451	P0500	P0500	P0500	P0511	P0510	P0560	P0617	P0705	P0710	P0720-P0793	P0715-P0717	P0724	P0741-P0796						
			P0325-P0333	P0335	P0340,P0341	P0340-P0346	P0351-P0358	P0385	P0401	P0402	P0405,P0406	P0409	P0420,P0430	P0440-P0446	P0450-P0453	P0500	P0500	P0500	P0511	P0510	P0560	P0617	P0705	P0710-P0713	P0720-P0793	P0715-P0717	P0724	P0741-P0796						
			Knock sensor	CKP sensor	CMP sensor	VVT sensor1,2	Ignitor	CKP sensor 2	EGR system (closed)	EGR system (open)	EGR Lift sensor	EGR Lift sensor	Catalyst	EVAP system	EVAP press sensor	VSS(ECT2sensor)	VSS(ECT1sensor, non-ECT)	VSS(M/T)	IAC valve	Idle switch	System Voltage	Starter signal	Shift lever position switch	Trans fluid temp sensor	Output speed sensor	Input speed sensor	Stop lamp switch	Trans solenoid (function)*1						
P0010,P0020	P0010,P0020	VVT VSV1,2																										X					
P0011	P0011	VVT System1 - Advance							X	X			X	X					X														
P0012	P0012	VVT System1 - Retard							X	X			X	X					X														
P0016,P0018	P0016,P0018	VVT System - Misalignment																															
P0021	P0021	VVT System2 - Advance							X	X			X	X					X														
P0022	P0022	VVT System2 - Retard							X	X			X	X					X														
P0030,50	P0031,32,51,52	O2 Sensor Heater - Sensor1							X	X			X						X										X				
P0135,P0155	P0031,32,51,52	A/F Sensor Heater - Sensor1							X	X			X						X														
P0036,56	P0037,38,57,58	O2 Sensor Heater - Sensor2											X																				
P0043,44,63,64	P0043,44,63,64	O2 Sensor Heater - Sensor3																															
P0100,P0101	P0100-P0103	MAF sensor							X	X			X	X				X	X										X				
P0105,P0106	P0105-P0108	MAP sensor							X	X			X	X				X	X										X				
P0110	P0110-P0113	IAT sensor							X	X				X															X				
P0115,P0116	P0115-P0118	ECT sensor							X	X		X	X	X				X	X										X				
P0120,P0121	P0120-P0223,P2135	TP sensor							X	X			X	X			X		X										X				
P0125	P0125	Insufficient ECT for Closed Loop							X	X		X	X	X				X	X										X				
P0128	P0128	Thermostat																															
P0130-P0153	P0130-P0153	O2 Sensor - Sensor1							X	X			X	X					X										X				
P0134,P0154	P0134,P0154	O2 Sensor, A/F Sensor(No Activity) - Sensor1							X	X			X						X										X				
P0136,P0156	P0136,P0156	O2 Sensor - Sensor2											X																				
P0142,P0162	P0142,P0162	O2 Sensor - Sensor3																															
P0171,P0172	P0171,P0172	Fuel system							X	X			X	X					X										X				
P0300-P0308	P0300-P0308	Misfire											X	X					X										X				
P0325,P0330	P0325-P0333	Knock sensor							X	X																			X				
P0335	P0335	CKP sensor							X	X			X	X					X										X				
P0340, P0341	P0340, P0341	CMP sensor							X	X			X	X					X										X				
P0340-P0346	P0340-P0346	VVT sensor1,2																															
P0351-P0358	P0351-P0358	Ignitor							X	X			X	X					X										X				
P0385	P0385	CKP sensor 2							X	X			X	X					X														
P0401	P0401	EGR system (closed)											X																X				
P0402	P0402	EGR system (open)											X	X					X										X				
P0405,P0409	P0405-P0409	Lift sensor																															
P0420,P0430	P0420,P0430	Catalyst																															
P0442-P0456	P0442-P0456	EVAP system																	X														
P0450,P0451	P0450-P0453	EVAP press sensor												X																			

C

A21572

Monitor detected malfunction

Fault code	Fault code	Component/ system	Monitor disablement (X - disabled)																														
			P0325,P0330	P0335	P0340,P0341	P0340-P0346	P0351-P0358	P0385	P0401	P0402	P0405	P0409	P0420,P0430	P0440-P0446	P0450,P0451	P0500	P0500	P0500	P0511	P0510	P0560	P0617	P0705	P0710	P0720-P0793	P0715-P0717	P0724	P0741-P0796						
			P0325-P0333	P0335	P0340,P0341	P0340-P0346	P0351-P0358	P0385	P0401	P0402	P0405,P0406	P0409	P0420,P0430	P0440-P0446	P0450-P0453	P0500	P0500	P0500	P0511	P0510	P0560	P0617	P0705	P0710-P0713	P0720-P0793	P0715-P0717	P0724	P0741-P0796						
			Knock sensor	CKP sensor	CMP sensor	VVT sensor1,2	Ignitor	CKP sensor 2	EGR system (closed)	EGR system (open)	EGR Lift sensor	EGR Lift sensor	Catalyst	EVAP system	EVAP press sensor	VSS(ECT2sensor)	VSS(ECT1sensor, non-ECT)	VSS(M/T)	IAC valve	Idle switch	System Voltage	Starter signal	Shift lever position switch	Trans fluid temp sensor	Output speed sensor	Input speed sensor	Stop lamp switch	Trans solenoid (function)*1						
P0500	P0500	VSS							X	X			X	X					X						X	X		X					
P0511	P0511	IAC valve																															
P0510	P0510	Idle switch								X			X	X					X									X					
P0560	P0560	System Voltage																															
P0617	P0617	Starter signal																															
P0705	P0705	Shift lever position switch																															
P0710	P0710-P0713	Trans fluid temp sensor																															
P0720-P0793	P0720-P0793	Output speed sensor																															X
P0715-P0717	P0715-P0717	Input speed sensor																															
P0724	P0724	Stop lamp switch																															
P0741-P0796	P0741-P0796	Trans solenoid (function)																															
P0748-P0798	P0748-P0799	Trans solenoid (range)																							X	X		X					
P0850	P0850	PNP switch																	X									X					
P1010,P1020	P1010,P1020	VVTL																															
P1011,12(,21,22)	P1011,12(,21,22)	VVTL system1(,2)							X	X			X	X					X														
P1126	P1126	Electronic magnet clutch																															
P1129	P1129	Electronic throttle system																															
P1430	P1430	HC adsorber ACT press sensor												X	X																		
P2004,6	P2004,6	Intake Manifold Runner Control																															
P2009,10	P2009,10	Intake Manifold Runner Control Circuit																															
P2014,16,17	P2014,16,17	Intake Manifold Runner Position Sensor																															
P2102,P2103	P2102,P2103	Throttle motor																															
P2120-P2138	P2120-P2138	Accel position sensor																															
P2196,P2198	P2196,P2198	A/F sensor (rationality)							X	X			X						X									X					
P2226	P2226	BARO sensor																										X					
P2237,P2240	P2237,P2240	A/F sensor (open)							X	X			X						X									X					
P2423,24	P2423,24	HC Adsorption Catalyst																															
P2430,2,3	P2430,2,3	AIR Pressure Sensor(Low/High)																															
P2431	P2431	AIR Pressure Sensor(Rationality)																															
P2440	P2440	AIR control valve stuck open							X	X			X																				
P2441	P2441	AIR control valve stuck close							X	X			X																				
P2444	P2444	AIP stuck On							X	X			X																				
P2445	P2445	AIP stuck Off							X	X			X																				
P2714-P2759	P2714-P2759	Trans solenoid(SLU-SLD)																										X					
P2A00,P2A03	P2A00,P2A03	A/F sensor (slow response)							X	X			X						X									X					

C

A21573

Monitor detected malfunction

Fault code	Fault code	Component/ system	Monitor disablement (X - disabled)																												
			P0741-P0796	P0748-P0798	P0850	P1010,P1020	P1011,12(,21,22)	P1126	P1129	P1430	P2004,P2006	P2009,P2010	P2014,16,17	P2102,P2103	P2120-P2138	P2196,P2198	P2226	P2237,P2240	P2423,24	P2430,2,3	P2431	P2440	P2441	P2444	P2445	P2714-P2759	P2A00,P2A03
	P0741-P0796	Trans solenoid (function)*2																													
	P0748-P0999	Trans solenoid (range)																													
	P0850	PNP switch																													
	P1010,P1020	VVTL																													
	P1011,12(,21,22)	VVTL system1(,2)																													
	P1126	Electronic magnet clutch																													
	P1129	Electronic throttle system																													
	P1430	HC adsorber ACT press sensor																													
	P2004,6	Intake Manifold Runner Control																													
	P2009,10	Intake Manifold Runner Control Circuit																													
	P2014,16,17	Intake Manifold Runner Position Sensor																													
	P2102,P2103	Throttle motor																													
	P2120-P2138	Accel position sensor																													
	P2196,P2198	A/F Sensor(Rationality) - Sensor1																													
	P2226	BARO sensor																													
	P2237,P2240	A/F Sensor(Open) - Sensor1																													
	P2423,24	HC Adsorption Catalyst																													
	P2430,2,3	AIR Pressure Sensor(Low/High)																													
	P2431	AIR Pressure Sensor(Rationality)																													
	P0010,P0020	P0010,P0020	VVT VSV1,2																				X	X	X	X					
	P0011	P0011	VVT System1 - Advance																				X	X	X	X					
	P0012	P0012	VVT System1 - Retard																				X	X	X	X					
	P0016,P0018	P0016,P0018	VVT System - Misalignment																				X	X	X	X					
	P0021	P0021	VVT System2 - Advance																				X	X	X	X					
	P0022	P0022	VVT System2 - Retard																				X	X	X	X					
	P0030,50	P0031,32,51,52	O2 Sensor Heater - Sensor1																X				X	X	X	X					
	P0135,P0155	P0031,32,51,52	A/F Sensor Heater - Sensor1													X		X	X				X	X	X	X				X	
	P0036,56	P0037,38,57,58	O2 Sensor Heater - Sensor2													X			X												
	P0043,44,63,64	P0043,44,63,64	O2 Sensor Heater - Sensor3																X												
	P0100,P0101	P0100-P0103	MAF sensor				X	X								X		X	X				X	X	X	X				X	
	P0105,P0106	P0105-P0108	MAP sensor				X	X								X		X	X				X	X	X	X				X	
	P0110	P0110-P0113	IAT sensor									X				X		X					X	X	X	X				X	
	P0115,P0116	P0115-P0118	ECT sensor	X			X	X				X				X		X	X				X	X	X	X				X	
	P0120,P0121	P0120-P0223,P2135	TP sensor													X		X	X				X	X	X	X				X	
	P0125	P0125	Insufficient ECT for Closed Loop	X			X									X		X	X				X	X	X	X				X	
	P0128	P0128	Thermostat																												
	P0130-P0153	P0130-P0153	O2 Sensor - Sensor1																X				X	X	X	X					
	P0134,P0154	P0134,P0154	O2 Sensor, A/F Sensor(No Activity) - Sensor1													X		X	X				X	X	X	X				X	
	P0136,P0156	P0136,P0156	O2 Sensor - Sensor2													X			X												
	P0142,P0162	P0142,P0162	O2 Sensor - Sensor3																X												
	P0171,P0172	P0171,P0172	Fuel system													X		X	X				X	X	X	X				X	
	P0300-P0308	P0300-P0308	Misfire													X		X	X				X	X	X	X				X	
	P0325,P0330	P0325-P0333	Knock sensor																				X	X	X	X					
	P0335	P0335	CKP sensor				X	X								X		X	X				X	X	X	X				X	
	P0340, P0341	P0340, P0341	CMP sensor				X	X								X		X	X				X	X	X	X				X	
	P0340-P0346	P0340-P0346	VVT sensor1,2																				X	X	X	X					
	P0351-P0358	P0351-P0358	Ignitor																X				X	X	X	X					
	P0385	P0385	CKP sensor 2				X	X								X		X	X				X	X	X	X				X	
	P0401	P0401	EGR system (closed)																X												
	P0402	P0402	EGR system (open)													X		X	X				X	X	X	X				X	
	P0405,P0409	P0405-P0409	Lift sensor																												
	P0420,P0430	P0420,P0430	Catalyst																												
	P0442-P0456	P0442-P0456	EVAP system													X		X					X	X	X	X				X	
	P0450,P0451	P0450-P0453	EVAP press sensor																				X	X	X	X					

C

A21575

Monitor detected malfunction

Fault code	Fault code	Component/system	Monitor disablement (X - disabled)																												
			P0741-P0796	P0748-P0798	P0850	P1010,P1020	P1011,12(,21,22)	P1126	P1129	P1430	P2004,P2006	P2009,P2010	P2014,16,17	P2102,P2103	P2120-P2138	P2196,P2198	P2226	P2237,P2240	P2423,24	P2430,2,3	P2431	P2440	P2441	P2444	P2445	P2714-P2759	P2A00,P2A03
	P0741-P0796	Trans solenoid (function)*2																													
	P0748-P0999	Trans solenoid (range)																													
	P0850	PNP switch																													
	P1010,P1020	VVTL																													
	P1011,12(,21,22)	VVTL system1(,2)																													
	P1126	Electronic magnet clutch																													
	P1129	Electronic throttle system																													
	P1430	HC adsorber ACT press sensor																													
	P2004,6	Intake Manifold Runner Control																													
	P2009,10	Intake Manifold Runner Control Circuit																													
	P2014,16,17	Intake Manifold Runner Position Sensor																													
	P2102,P2103	Throttle motor																													
	P2120-P2138	Accel position sensor																													
	P2196,P2198	A/F Sensor(Rationality) - Sensor1																													
	P2226	BARO sensor																													
	P2237,P2240	A/F Sensor(Open) - Sensor1																													
	P2423,24	HC Adsorption Catalyst																													
	P2430,2,3	AIR Pressure Sensor(Low/High)																													
	P2431	AIR Pressure Sensor(Rationality)																													
	P2440	AIR control valve stuck open																													
	P2441	AIR control valve stuck close																													
	P2444	AIP stuck On																													
	P2445	AIP stuck Off																													
	P2714-P2759	Trans solenoid(SLU-SLD)																													
	P2A00,P2A03	A/F Sensor (Slow response) - Sensor1																													
P0500	P0500	VSS	X													X		X	X			X	X	X	X		X
P0511	P0511	IAC valve														X		X										X
P0510	P0510	Idle switch														X		X	X									X
P0560	P0560	System Voltage																													
P0617	P0617	Starter signal																													
P0705	P0705	Shift lever position switch																													
P0710	P0710-P0713	Trans fluid temp sensor																													
P0720-P0793	P0720-P0793	Output speed sensor																													
P0715-P0717	P0715-P0717	Input speed sensor																													
P0724	P0724	Stop lamp switch																													
P0741-P0796	P0741-P0796	Trans solenoid (function)																													
P0748-P0798	P0748-P0799	Trans solenoid (range)	X																												
P0850	P0850	PNP switch																													
P1010,P1020	P1010,P1020	VVTL																				X	X	X	X		
P1011,12(,21,22)	P1011,12(,21,22)	VVTL system1(,2)																				X	X	X	X		X
P1126	P1126	Electronic magnet clutch																													
P1129	P1129	Electronic throttle system																													
P1430	P1430	HC adsorber ACT press sensor																													
P2004,6	P2004,6	Intake Manifold Runner Control																													
P2009,10	P2009,10	Intake Manifold Runner Control Circuit																													
P2014,16,17	P2014,16,17	Intake Manifold Runner Position Sensor																													
P2102,P2103	P2102,P2103	Throttle motor																													
P2120-P2138	P2120-P2138	Accel position sensor																													
P2196,P2198	P2196,P2198	A/F sensor (rationality)																	X			X	X	X	X		X
P2226	P2226	BARO sensor														X		X				X	X	X	X		X
P2237,P2240	P2237,P2240	A/F sensor (open)																	X			X	X	X	X		X
P2423,24	P2423,24	HC Adsorption Catalyst																													
P2430,2,3	P2430,2,3	AIR Pressure Sensor(Low/High)																			X	X	X	X	X		
P2431	P2431	AIR Pressure Sensor(Rationality)																				X	X	X	X		
P2440	P2440	AIR control valve stuck open														X		X	X								X
P2441	P2441	AIR control valve stuck close														X		X	X								X
P2444	P2444	AIP stuck On														X		X	X								X
P2445	P2445	AIP stuck Off														X		X	X								X
P2714-P2759	P2714-P2759	Trans solenoid(SLU-SLD)																									
P2A00,P2A03	P2A00,P2A03	A/F sensor (slow response)																	X			X	X	X	X		

C

A21576

DIDSV−01

O2S TEST RESULT

INTRODUCTION

The O2S TEST RESULT refers to the results of the engine control module (ECM) when it monitors the oxygen sensor (O2S), and it can be read using the hand−held tester. Based on this, you can find the O2S's conditions.

The ECM monitors the O2S in the various items. You can read the monitor result (TEST DATA) of each monitor item using the O2S TEST RESULT. However, the output value of the TEST DATA is the latest "snapshot" value that is taken after monitoring and therefore it is not dynamic.

In this repair manual, the description of the O2S TEST RESULT (for O2S related DTCs) are written in a table.

This table consists of 5 items:

(1) TEST ID (a code applied to each TEST DATA)
(2) Description of TEST DATA
(3) Conversion Factor (When Conversion Factor has a value written in the table, multiply the TEST DATA value appearing on the scan tool by the Conversion Factor value. The result will be the required value.)
(4) Unit
(5) Standard Value

If the TEST DATA value appearing on the scan tool is out of the standard value, the O2S is malfunctioning. If it is within the standard value, the O2S is functioning normally. However, if the value is on the borderline of the standard value, the O2S may malfunction very soon.

HOW TO READ O2S TEST RESULT USING HAND−HELD TESTER

(a) Connect the hand−held tester to the DLC3.

O2S TEST RESULT Screen

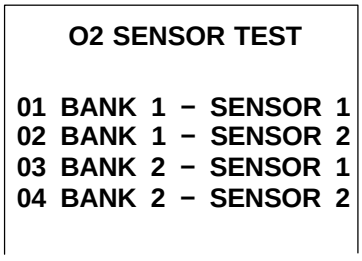

(b) On the tester screen, select the following menus: DIAGNOSIS / CARB OBDII / O2S TEST RESULT. A list of the O2S equipped on the vehicle will be displayed.

TEST DATA Screen

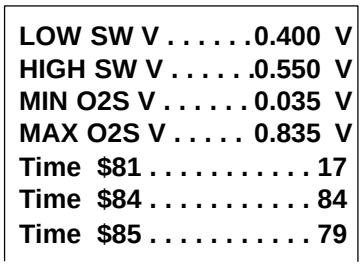

(c) Select the desired O2S and press ENTER. The following screen will appear.

(d) Press HELP and ⁎ simultaneously. More information will appear.

(e) Example:

(1) The hand−held tester displays ”17” as a value of the ”TIME $81” (see the illustration on the left).

(2) Find the Conversion Factor value of ”TIME $81” in the O2S TEST RESULT chart below. 0.3906 is specified for $81 in this chart.

(3) Multiply ”17” in step (1) by 0.3906 (Conversion Factor) in the step (2).
17 x 0.3906 = 6.6 %

(4) If the answer is within the standard value, the ”TIME $81” can be confirmed to be normal.

O2S TEST RESULT Chart

TEST ID	Description of TEST DATA	Conversion Factor	Unit	Standard Value
$81	Percentage of monitoring time when the HO2S voltage is less than 0.05V	Multiply 0.3906	%	Within 60 %

ENGINE (1GR−FE)

DIDSK−01

PRECAUTION

NOTICE:

Perform the RESET MEMORY (AT initialization) when replacing the automatic transaxle assembly, engine assembly or ECM (see page DI−961).

HINT:

RESET MEMORY (AT initialization) can not be completed by only removing the battery.

DIDSX−01

PROBLEM SYMPTOMS TABLE

Symptom	Suspect Area	See page
Engine does not crank (Does not start)	1. Cranking holding function circuit 2. Starter 3. Starter relay 4. Park/neutral position switch	DI−404 ST−1 ST−26 DI−993
No initial combustion (Does not start)	1. ECM power source circuit 2. Fuel pump control circuit 3. Engine control module (ECM)	DI−409 DI−414 IN−30
No complete combustion (Does not start)	1. Fuel pump control circuit	DI−414
Engine cranks normally but difficult to start	1. Starter signal circuit 2. Fuel pump control circuit 3. Compression	DI−276 DI−414 EM−3
Difficult to start with cold engine	1. Starter signal circuit 2. Fuel pump control circuit	DI−276 DI−414
Difficult to start with hot engine	1. Starter signal circuit 2. Fuel pump control circuit	DI−276 DI−414
High engine idle speed (Poor idling)	1. A/C switch circuit 2. ECM power source circuit	− DI−409
Low engine idle speed (Poor idling)	1. A/C switch circuit 2. Fuel pump control circuit	− DI−414
Rough idling (Poor idling)	1. Compression 2. Fuel pump control circuit	 DI−414
Hunting (Poor idling)	1. ECM power source circuit 2. Fuel pump control circuit	IN−30 DI−414
Hesitation/Poor acceleration (Poor driveability)	1. Fuel pump control circuit 2. A/T faulty	DI−414 −
Surging (Poor driveability)	1. Fuel pump control circuit	DI−414
Engine stalls soon after starting	1. Fuel pump control circuit	DI−414
Engine stalls during A/C operation	1. A/C switch circuit 2. Engine control module (ECM)	− IN−30
Unable to refuel/Difficult to refuel	1. ORVR system	−

DIDST−01

REGISTRATION

NOTICE:

The Vehicle Identification Number (VIN) must be input into the replacement ECM.

HINT:

The VIN is in the form of a 17−digit alphanumeric vehicle identification number. A hand−held tester is required to resister the VIN.

1. DESCRIPTION

This registration section consists of three parts, Input Instructions, Read VIN and Write VIN.

(a) Input Instructions: Explains the general VIN input instructions using a hand−held tester.

(b) Read VIN: Explains the VIN reading process in a flowchart. This process allows the VIN stored in the ECM to be read, in order to confirm that the two VINs, provided with the vehicle and stored in the vehicle's ECM, are the same.

(c) Write VIN: Explains the VIN writing process in a flowchart. This process allows the VIN to be input into the ECM. If the ECM is changed, or the VIN and VIN do not match, the VIN can be registered, or overwritten in the ECM by following this procedure.

2. INPUT INSTRUCTIONS

(a) Hand−held tester

The arrow buttons (UP, DOWN, RIGHT and LEFT) and numerical buttons (0 to 9) are used, in order to input the VIN.

(b) Cursor Operation

To move the cursor around the tester screen, press the RIGHT and LEFT buttons.

(c) Alphabetical Character Input

(1) Press the UP and DOWN buttons to select the desired alphabetical character.

(2) After selection, the cursor should move.

(d) Numeric Character Input

(1) Press the numerical button corresponding to the number that you want to input.

(2) Select or input the correct character using the UP/DOWN buttons, or the numerical buttons.

HINT:

Numerical characters can be selected by using the UP and DOWN buttons.

(e) Correction

(1) After input, the cursor should move.

(2) When correcting the input character(s), put the cursor onto the character using the RIGHT or LEFT buttons.

(f) Finishing Input Operation

(1) Make sure that the input VIN matches the vehicle VIN after input.

(2) Press the ENTER button on the tester.

3. READ VIN (Vehicle Identification Number)

(a) Read VIN using a hand−held tester.

READ:

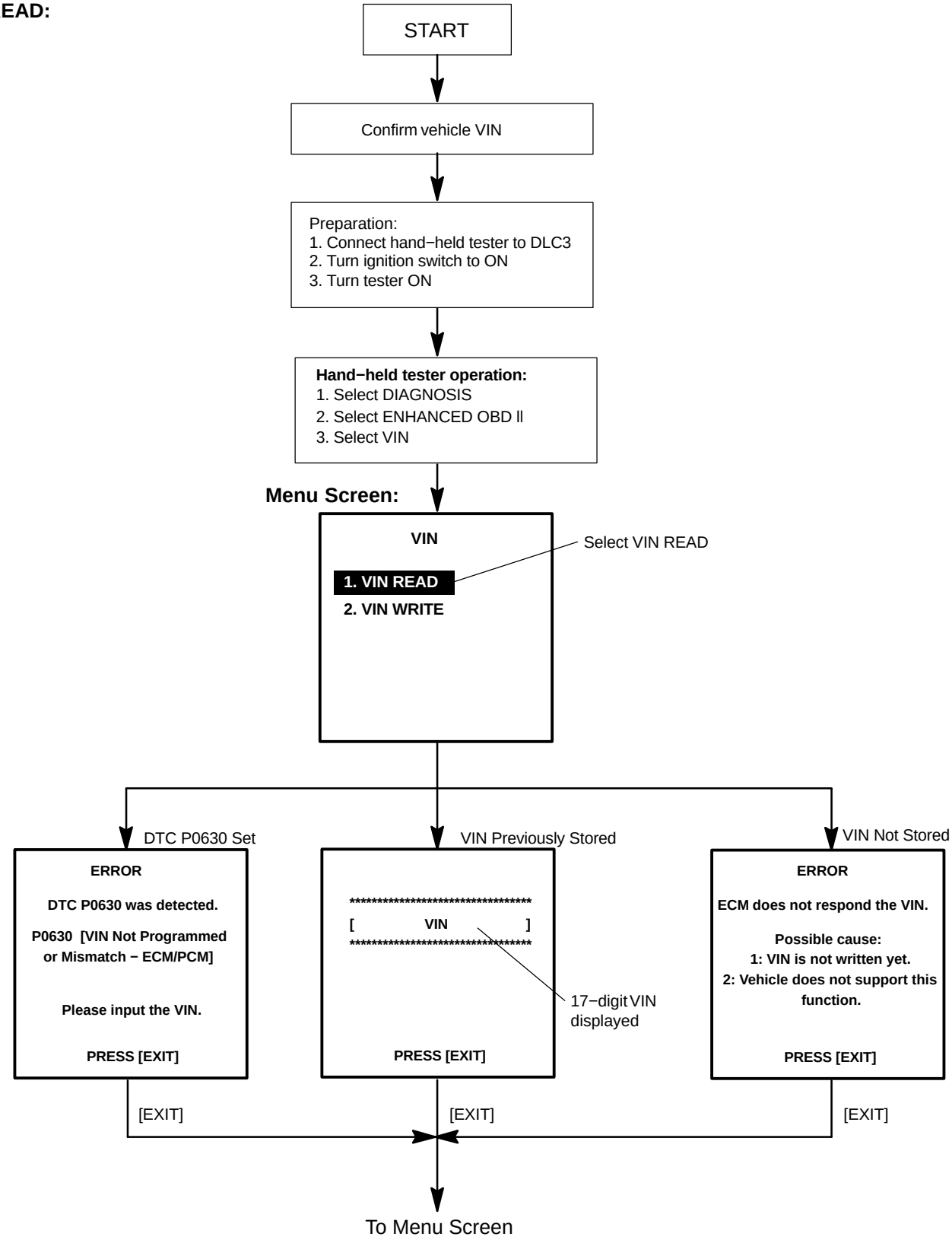

4. WRITE VIN

(a) Write VIN using the hand−held tester.

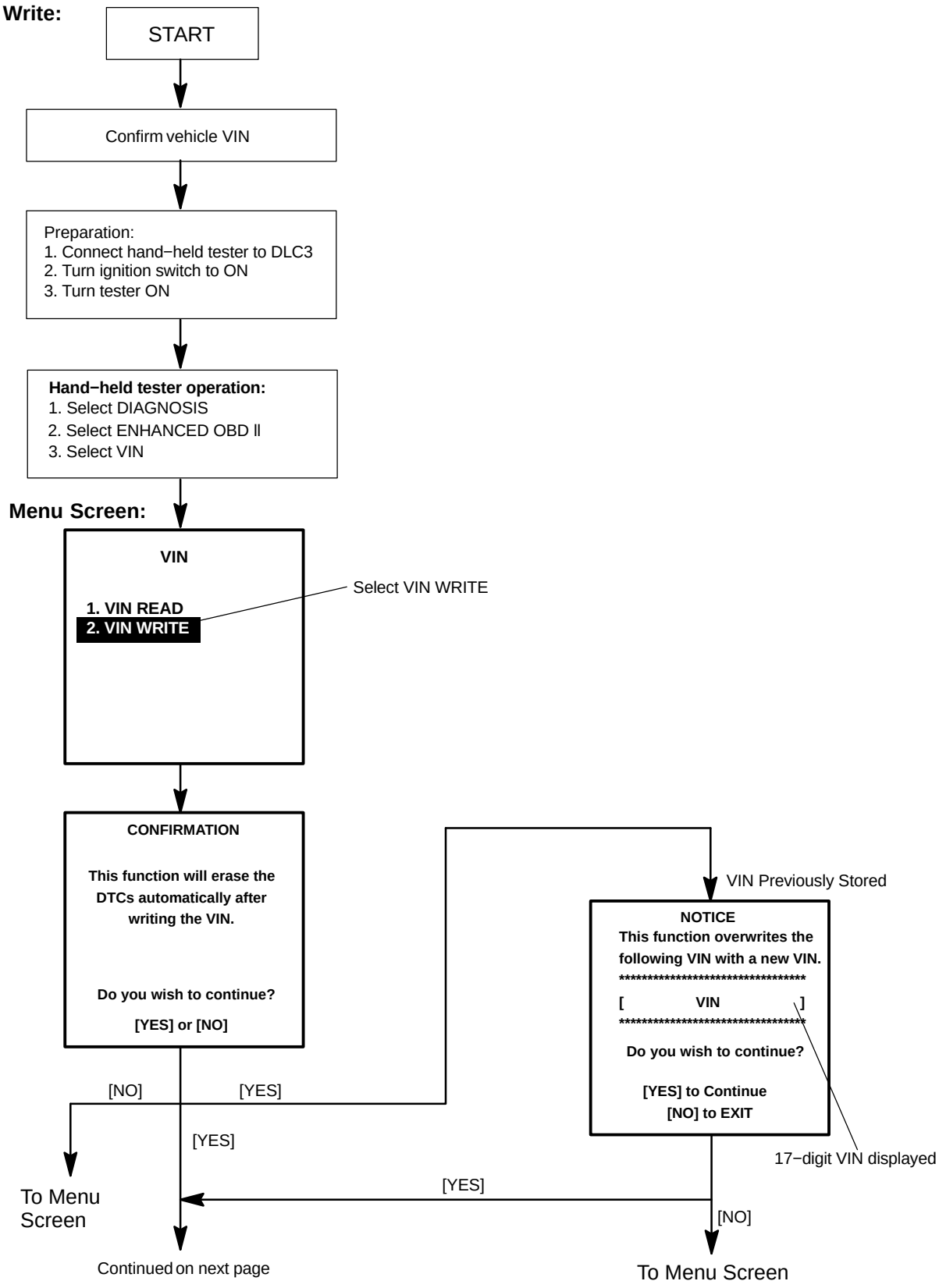

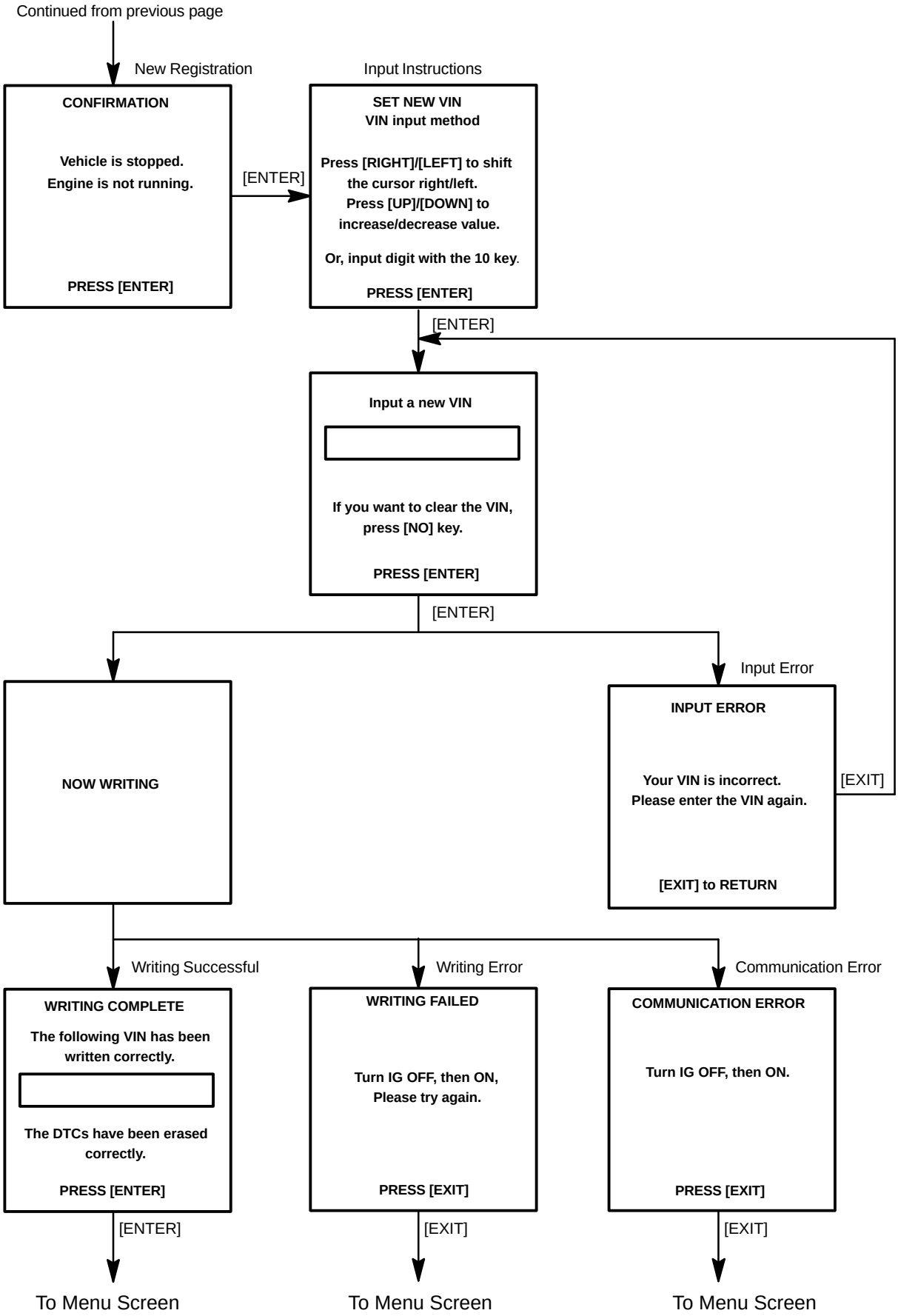
Continued from previous page
New Registration
Input Instructions
CONFIRMATION
Vehicle is stopped.
Engine is not running.
PRESS [ENTER]
[ENTER]
SET NEW VIN
VIN input method
Press [RIGHT]/[LEFT] to shift the cursor right/left.
Press [UP]/[DOWN] to increase/decrease value.
Or, input digit with the 10 key.
PRESS [ENTER]
[ENTER]
Input a new VIN
If you want to clear the VIN, press [NO] key.
PRESS [ENTER]
[ENTER]
Input Error
NOW WRITING
INPUT ERROR
Your VIN is incorrect.
Please enter the VIN again.
[EXIT] to RETURN
[EXIT]
Writing Successful
Writing Error
Communication Error
WRITING COMPLETE
The following VIN has been written correctly.
The DTCs have been erased correctly.
PRESS [ENTER]
WRITING FAILED
Turn IG OFF, then ON,
Please try again.
PRESS [EXIT]
COMMUNICATION ERROR
Turn IG OFF, then ON.
PRESS [EXIT]
[ENTER]
[EXIT]
[EXIT]
To Menu Screen
To Menu Screen
To Menu Screen

DIDUH−01

READINESS MONITOR DRIVE PATTERN

1. PURPOSE OF THE READINESS TESTS

- The On−Board Diagnostic (OBD II) system is designed to monitor the performance of emission−related components and report any detected abnormalities in the form of Diagnostic Trouble Codes (DTCs). Since the various components need to be monitored during different driving conditions, the OBD II system is designed to run separate monitoring programs called Readiness Monitors. Many state Inspection and Maintenance (I/M) programs require that vehicles complete their Readiness Monitors prior to beginning an emission test.
- The current status of the Readiness Monitors can be seen by using the hand−held tester with version 9.0 software (or newer), or a generic OBD II Scan tool.
- To view the Readiness Monitor status using the hand−held tester, select ”Monitor Status” from the Enhanced OBD II Menu.
- A status of ”complete” indicates that the necessary conditions have been met to run the performance tests for the related Readiness Monitor.
- The Readiness Monitor will be reset to ”incomplete” if:
  - ECM has lost power (battery or fuse).
  - DTCs have been cleared.
  - The conditions for running the Readiness Monitor have not been met.
- In the event that any Readiness Monitor shows ”incomplete,” follow the appropriate Readiness Monitor Drive Pattern to activate the monitor and change the readiness status to ”complete.”

CAUTION:

Strictly observe the posted speed limits, traffic laws, and road conditions when performing these drive patterns.

NOTICE:

These drive patterns represent the fastest method to satisfy all necessary conditions which allow the specific readiness monitor to complete.

In the event that the drive pattern must be interrupted (possibly due to traffic conditions or other factors) the drive pattern can be resumed, and in most cases, the readiness monitor will still set to ”complete”.

To ensure rapid completion of readiness monitors, avoid sudden changes in vehicle load and speed (driving up and down hills and/or sudden acceleration).

Contents:

TITLE	STEP(s)
CATALYST MONITOR	2
EVAP MONITOR	3, 4
AIR−FUEL RATIO (A/F) AND OXYGEN SENSOR (O2S) MONITOR	5
OXYGEN SENSOR HEATER MONITOR	6

2. CATALYST MONITOR (ACTIVE AIR−FUEL RATIO CONTROL TYPE)

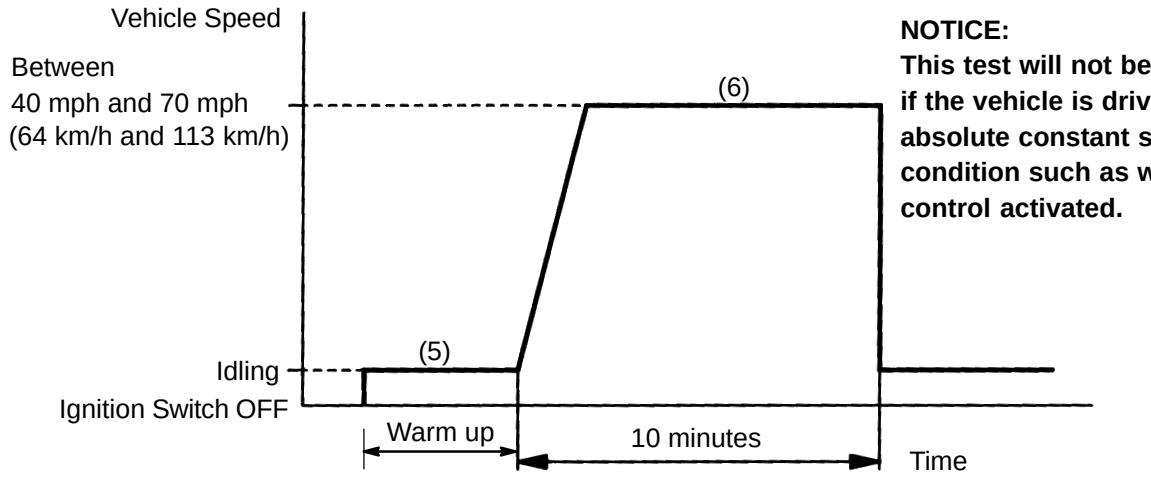

(a) Preconditions

The monitor will not run unless:

- The MIL is OFF

(b) Drive Pattern

(1) Connect a hand−held tester or OBD II scan tool to the DLC3.
(2) Turn the ignition switch to ON.
(3) Turn the tester or scan tool ON.
(4) Clear DTCs (where set) (see page DI−42).
(5) Start the engine and warm it up.
(6) Drive the vehicle at between 40 mph and 70 mph (64 km/h and 113 km/h) for at least 10 minutes.

(c) Monitor Status

(1) Check the Readiness Monitor status displayed on the tester or scan tool.
(2) If the status does not switch to COMPL (complete), extend the driving time.

3. EVAP MONITOR (VACUUM PRESSURE MONITOR)

NOTICE:

A cold soak must be performed prior to conducting the drive pattern to complete the Internal Pressure Readiness Monitor.

(a) Cold Soak Preconditions

The monitor will not run unless:

- MIL is OFF
- Fuel level is approximately 1/2 to 3/4
- Altitude is 7,800 feet (2,400 m) or less

(b) Cold Soak Procedure

Let the vehicle cold soak for 8 hours or until the difference between IAT and ECT becomes less than 7˚C (13˚F)

HINT:

Examples:

- Scenario 1
  ECT = 24˚C (75˚F)
  IAT = 16˚C (60˚F)
  Difference between ECT and IAT is 8˚C (15˚F)
  → The monitor will not run because difference between ECT and IAT is greater than 7˚C (13˚F)
- Scenario 2
  ECT = 21˚C (70˚F)
  IAT = 20˚C (68˚F)
  Difference between ECT and IAT is 1˚C (2˚F)
  → The monitor will run because difference between ECT and IAT is less than 7˚C (13˚F)

4. EVAP MONITOR (VACUUM PRESSURE MONITOR) (CONTINUED)

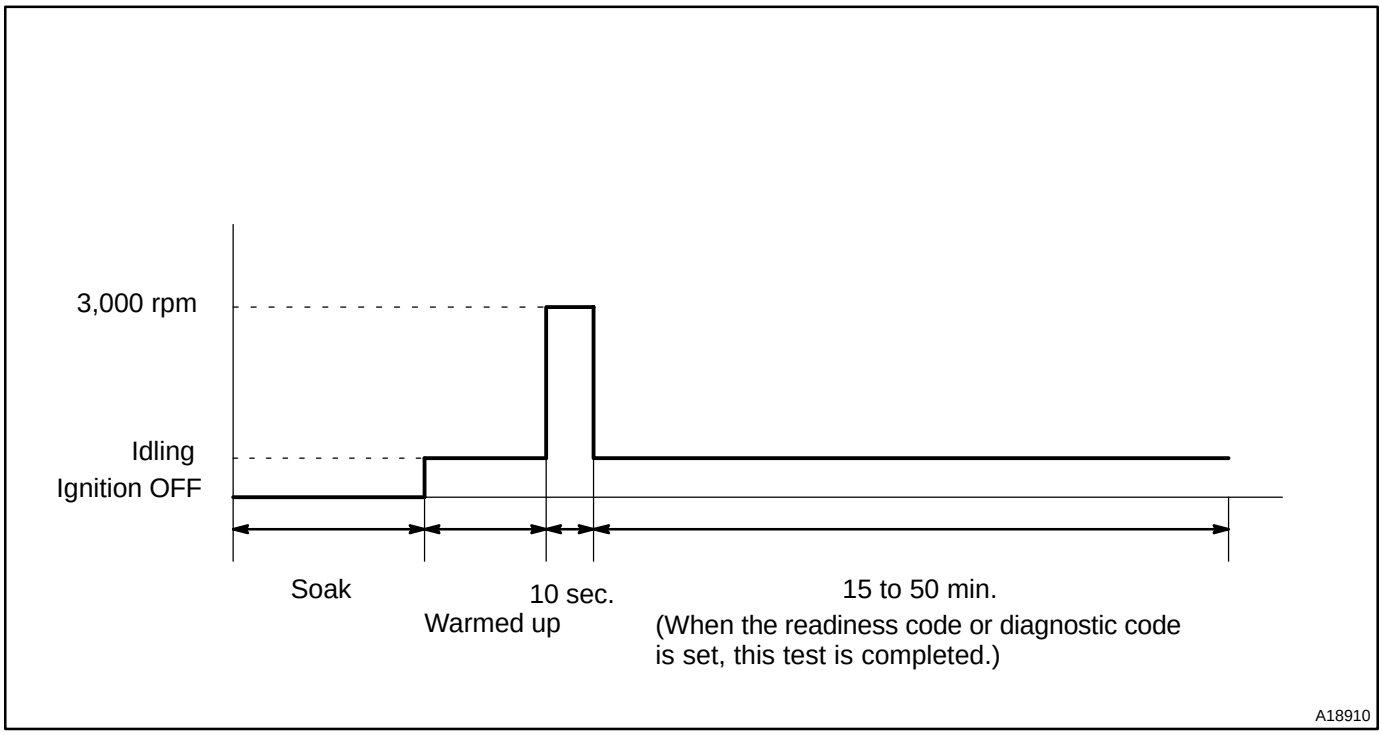

(a) Preconditions

The monitor will not run unless:

- MIL is OFF
- Fuel level is approximately 1/2 to 3/4
- Altitude is 7,800 feet (2,400 m) or less
- Engine Coolant Temperature (ECT) is between 4.4°C and 35°C (40°F and 95°F)
- Intake Air Temperature (IAT) is between 4.4°C and 35°C (40°F and 95°F)
- Cold Soak Procedure has been completed
- Before starting the engine, the difference between ECT and IAT must be less than 7°C (13°F)

HINT:

Examples:

- Scenario 1

  ECT = 24°C (75°F)

  IAT = 16°C (60°F)

  Difference between ECT and IAT is 8°C (15°F)

  → The monitor will not run because difference between ECT and IAT is higher than 7°C (13°F)
- Scenario 2

  ECT = 21°C (70°F)

  IAT = 20°C (68°F)

  Difference between ECT and IAT is 1°C (2°F)

  → The monitor will run because difference between ECT and IAT is less than 7°C (13°F)

The readiness test can be completed in cold ambient conditions (less than 40°F / 4.4°C) and/or at high altitudes (more than 7,800 feet / 2,400 m) if the drive pattern is repeated a second time after cycling the ignition off.

(b) Drive Pattern

(1) Connect the OBD II scan tool to DLC3 to check monitor status and preconditions (refer to (a)).

(2) Release pressure in fuel tank by removing the fuel tank cap and then reinstall it.

(3) Start the engine and allow it to idle until ECT becomes 75°C (167°F) or higher.

(4) Run the engine at 3,000 rpm for approximately 10 seconds.

(5) Allow the engine to idle with the A/C ON (to create slight load) for 15 to 50 minutes.

NOTICE:

If the vehicle is not equipped with A/C, put a slight load on the engine by doing the following :

- **Securely set the parking brake.**
- **Block the drive wheels with wheel chocks.**
- **Allow the vehicle to idle in drive for 15 to 50 minutes.**

5. AIR−FUEL RATIO (A/F) AND OXYGEN SENSOR (HO2) MONITOR (ACTIVE AIR−FUEL RATIO CONTROL TYPE)

(a) Preconditions

The monitor will not run unless:

- 2 minutes or more have elapsed since the engine was started.
- The Engine Coolant Temperature (ECT) is 75°C (167°F) or higher.
- Air−fuel ratio feedback control is performed.
- Fuel−cut control is performed for 8 seconds or more.

(b) Drive Pattern

(1) Connect the hand−held tester to DLC3.
(2) Turn the ignition switch to ON.
(3) Clear DTCs (see page DI−42).
(4) Start the engine, and warm it up until the ECT reaches 75°C (167°F) or higher.
(5) Drive the vehicle at 40 mph (64 km/h) or more for at least 10 minutes.
(6) Change the transmission to 2nd gear.
(7) Accelerate the vehicle to 30 mph (48 km/h) or more by depressing the accelerator pedal for at least 10 seconds.
(8) Soon after performing step (8) above, release the accelerator pedal for at least 4 seconds without depressing the brake pedal, in order to execute fuel−cut control.
(9) Stop the vehicle and allow the engine to idle for 10 seconds or more.
(10) Allow the vehicle to decelerate until the vehicle speed declines to less than 6 mph (10 km/h).
(11) Repeat steps from (8) through (10) above at least 3 times in one driving cycle.

(c) Monitor Status

(1) Check the Readiness Monitor status displayed on the tester.
(2) If the status does not switch to COMPL (complete), make sure that the preconditions have been met, and then perform steps from (5) through (11) in Drive Pattern above.

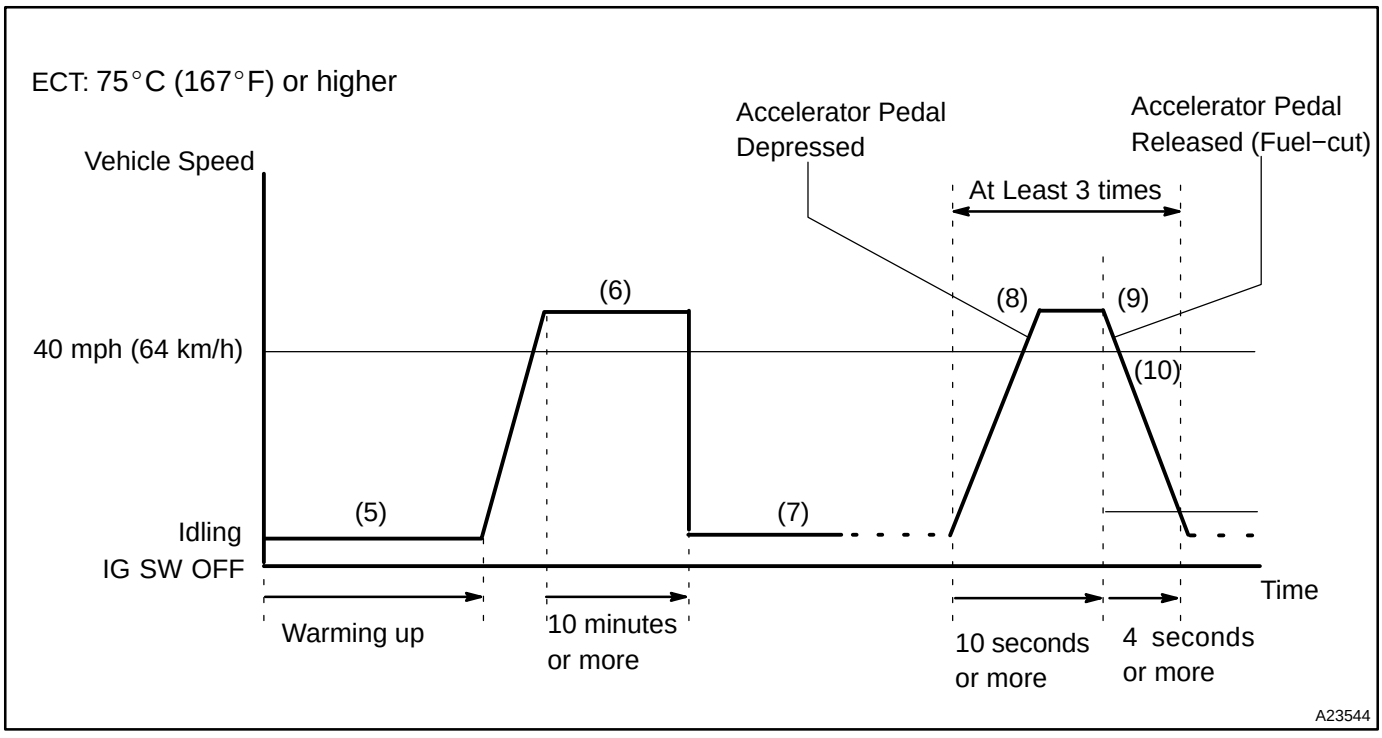

6. OXYGEN SENSOR HEATER MONITOR

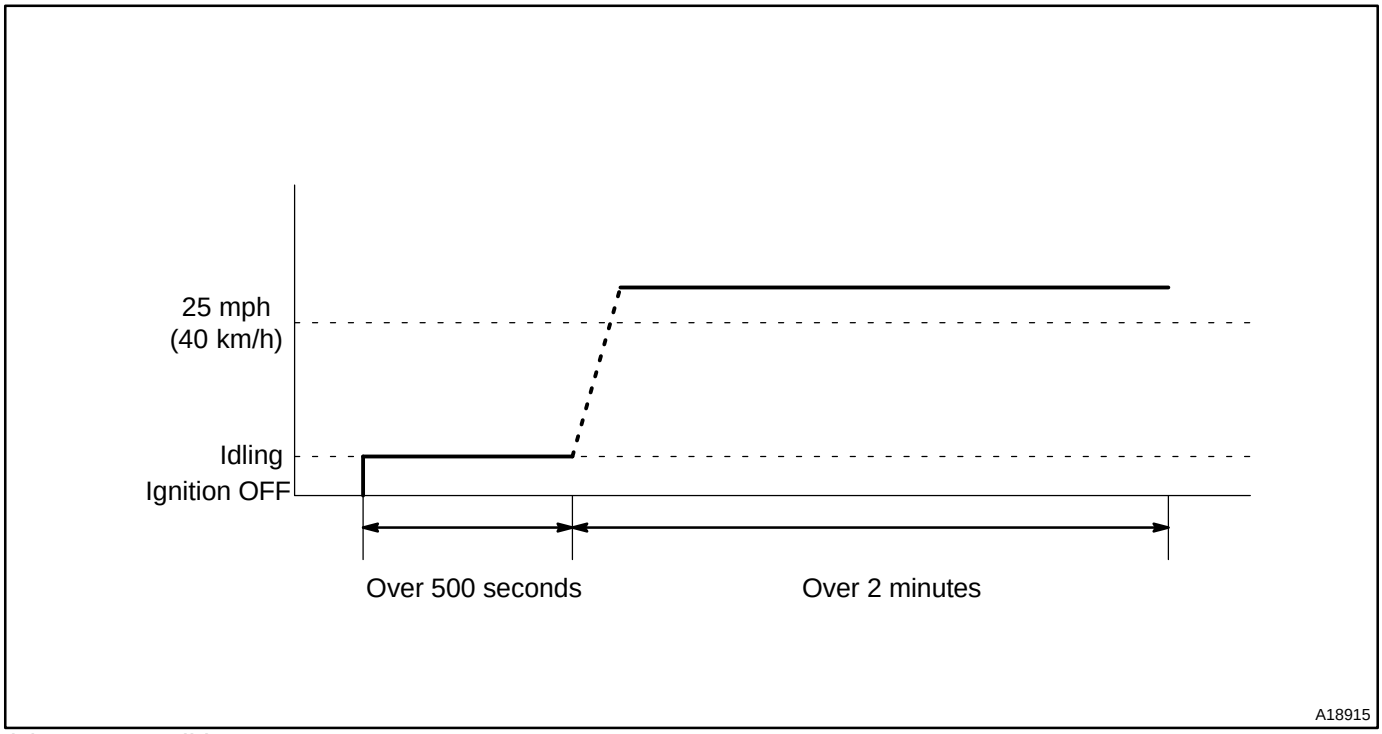

(a) Preconditions

The monitor will not run unless:

- MIL is OFF

(b) Drive Pattern

(1) Connect the OBD II scan tool to the DLC3 to check monitor status and preconditions (refer to (a)).

(2) Start the engine and allow it to idle for 500 seconds or more.

(3) Drive the vehicle at 25 mph (40 km/h) or more for at least 2 minutes.

(4) Check the status of the readiness monitor on the scan tool display. If readiness status did not switch to complete, ensure the preconditions are met, turn the ignition off and then repeat steps (2) and (3).

DIDSN−01

SYSTEM DIAGRAM

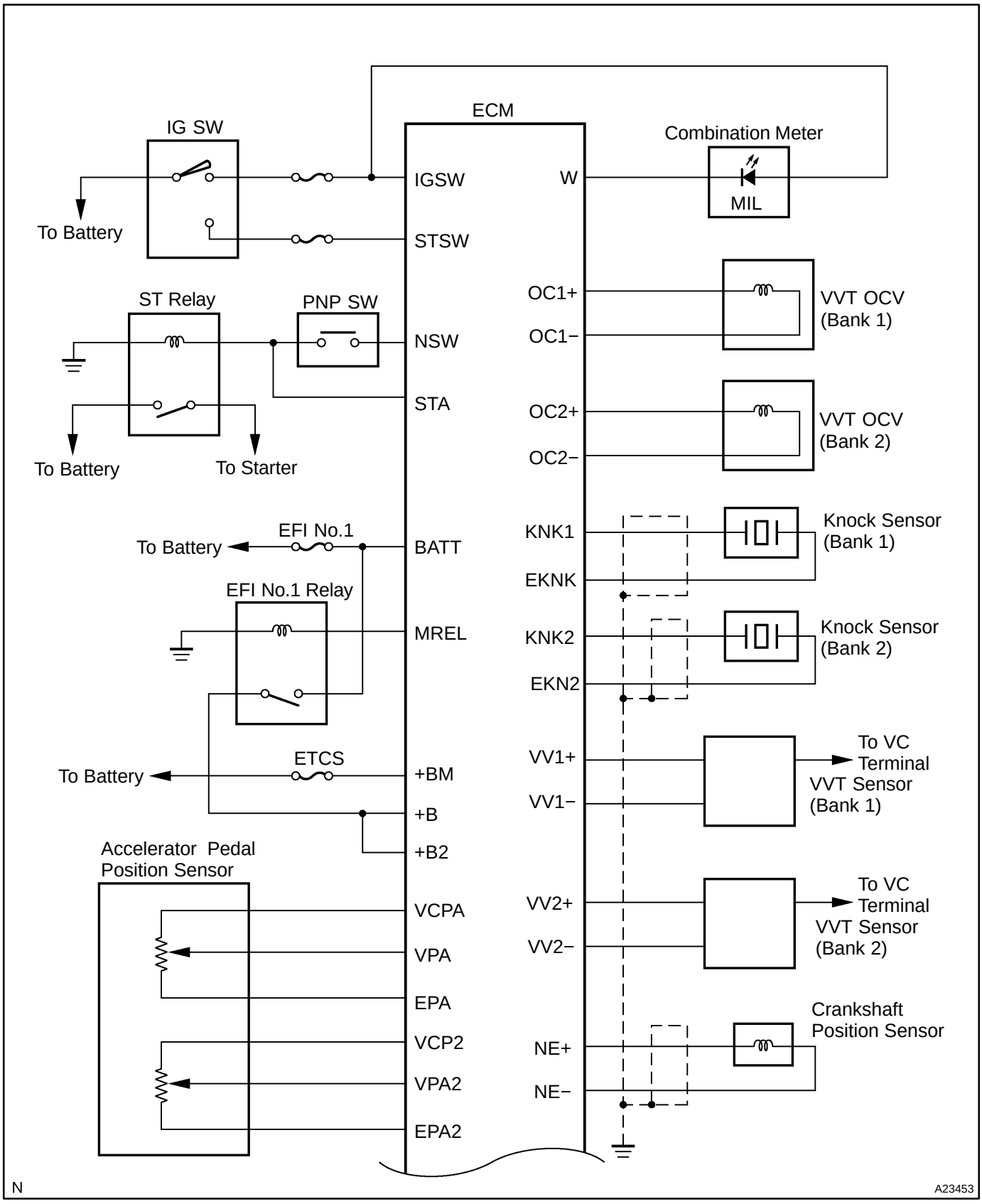

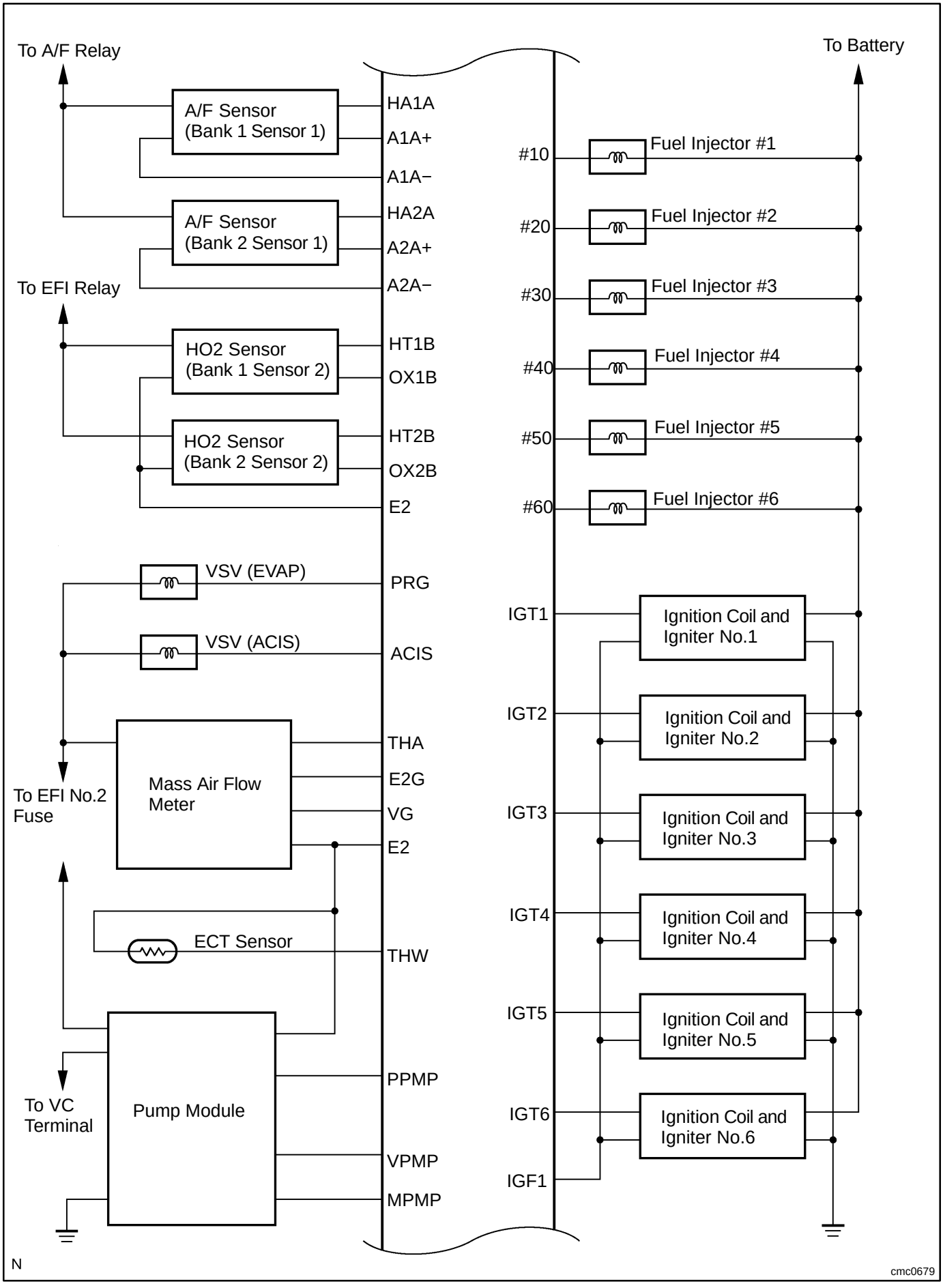
To A/F Relay
A/F Sensor
(Bank 1 Sensor 1)
HA1A
A1A+
A1A−
A/F Sensor
(Bank 2 Sensor 1)
HA2A
A2A+
A2A−
To EFI Relay
HO2 Sensor
(Bank 1 Sensor 2)
HT1B
OX1B
HO2 Sensor
(Bank 2 Sensor 2)
HT2B
OX2B
E2
VSV (EVAP)
PRG
VSV (ACIS)
ACIS
To EFI No.2
Fuse
Mass Air Flow
Meter
THA
E2G
VG
E2
ECT Sensor
THW
To VC
Terminal
Pump Module
PPMP
VPMP
MPMP
To Battery
#10
Fuel Injector #1
#20
Fuel Injector #2
#30
Fuel Injector #3
#40
Fuel Injector #4
#50
Fuel Injector #5
#60
Fuel Injector #6
IGT1
Ignition Coil and
Igniter No.1
IGT2
Ignition Coil and
Igniter No.2
IGT3
Ignition Coil and
Igniter No.3
IGT4
Ignition Coil and
Igniter No.4
IGT5
Ignition Coil and
Igniter No.5
IGT6
Ignition Coil and
Igniter No.6
IGF1
N
cmc0679

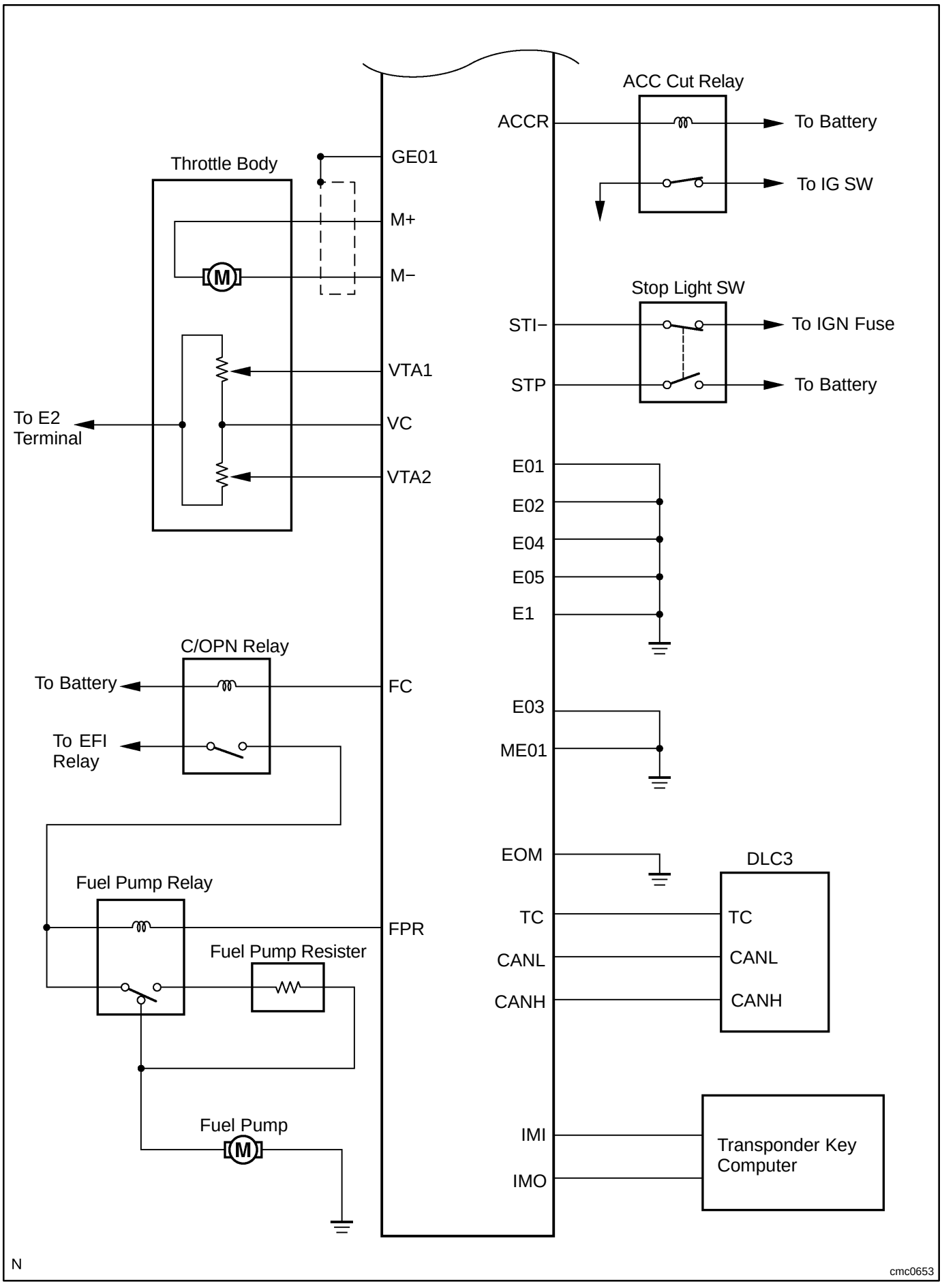
ACC Cut Relay
ACCR
To Battery
To IG SW
Throttle Body
GE01
M+
M−
Stop Light SW
STI−
To IGN Fuse
STP
To Battery
VTA1
To E2
Terminal
VC
VTA2
E01
E02
E04
E05
E1
C/OPN Relay
To Battery
FC
To EFI
Relay
E03
ME01
EOM
DLC3
Fuel Pump Relay
TC
TC
FPR
Fuel Pump Resister
CANL
CANL
CANH
CANH
Fuel Pump
IMI
Transponder Key
Computer
IMO
N
cmc0653

DIDSY−01

TERMINALS OF ECM

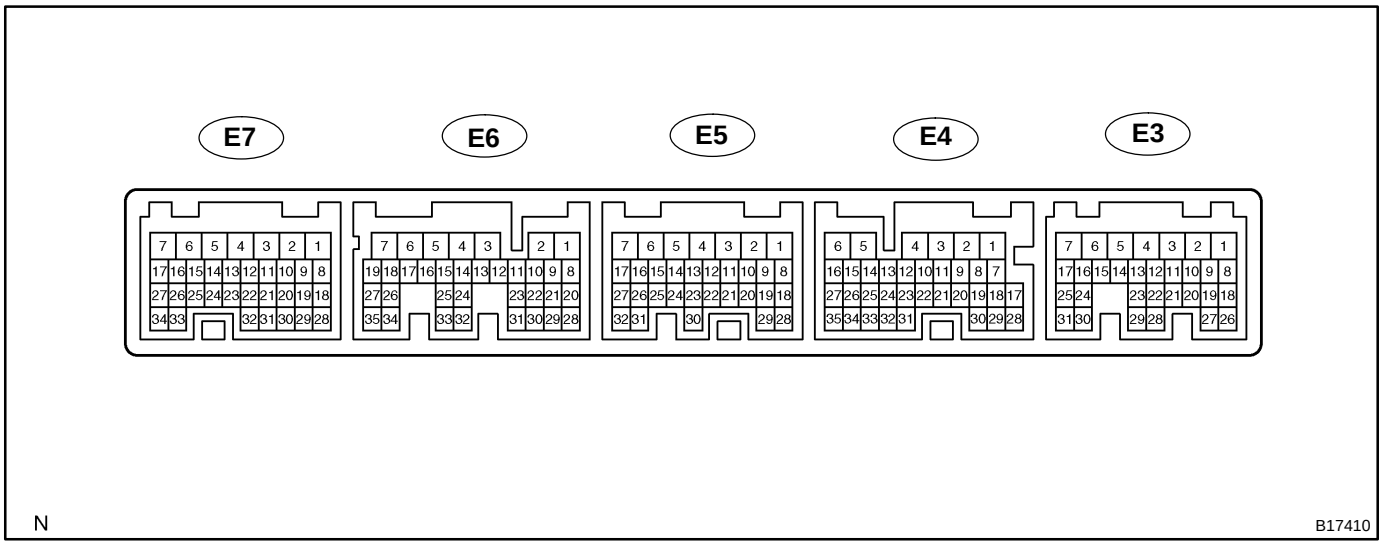

Each ECM terminals' standard voltage is shown in the table below. In the table, first follow the information under "Condition".
Look under "Symbols (Terminals No.)" for the terminals to be inspected.
The standard voltage between the terminals is shown under "STD Voltage".
Use the illustration above as a reference for the ECM terminals.

Symbols (Terminals No.)	Wiring Color	Condition	STD Voltage
BATT (E3−3) − E1 (E5−1)	B−R − BR	Always	9 to 14 V
+BM (E3−7) − E1 (E5−1)	G−Y − BR		
IGSW (E3−9) − E1 (E5−1)	B−O − BR	IG switch ON	9 to 14 V
+B (E3−1) − E1 (E5−1)	W−L − BR		
+B2 (E3−2) − E1 (E5−1)	W−L − BR		
MREL (E3−8) − E1 (E5−1)	GR−G − BR	IG switch ON	9 to 14 V
VC (E7−23) − E2 (E7−28)	G−B − B−W	IG switch ON	4.5 to 5.5 V
VG (E7−30) − E2G (E7−29)	R−L − G−W	Idling, P or N position, A/C switch OFF	0.5 to 3.0 V
THA (E7−22) − E2 (E7−28)	Y−G − B−W	Idling, Intake air temp. 20°C (68°F)	0.5 to 3.4 V
THW (E7−21) − E2 (E7−28)	G−Y − B−W	Idling, Engine coolant temp. 80°C (176°F)	0.2 to 1.0 V
VTA1 (E7−20) − E2 (E7−28)	GR − B−W	IG switch ON, Accelerator pedal released	0.5 to 1.2 V
		IG switch ON, Accelerator pedal depressed	3.2 to 4.8 V
VTA2 (E7−19) − E2 (E7−28)	R−B − B−W	IG switch ON, Accelerator pedal released	2.0 to 3.1 V
		IG switch ON, Accelerator pedal depressed	4.5 to 5.5 V
VPA (E3−18) − EPA (E3−20)	R−G − V−R	IG switch ON, Accelerator pedal released	0.5 to 1.1 V
		IG switch ON, Accelerator pedal depressed	2.6 to 4.5 V
VPA2 (E3−19) − EPA2 (E3−21)	L − LG−R	IG switch ON, Accelerator pedal released	1.2 to 2.0 V
		IG switch ON, Accelerator pedal depressed	3.4 to 5.3 V
VCPA (E3−26) − EPA (E3−20)	P−G − V−R	IG switch ON	4.5 to 5.5 V
VCP2 (E3−27) − EPA2 (E3−21)	G−R − LG−R	IG switch ON	4.5 to 5.5 V
#10 (E5−2) − E01 (E7−7)	R − W−B	IG switch ON	9 to 14 V
#20 (E5−3) − E01 (E7−7)	W − W−B		
#30 (E5−4) − E01 (E7−7)	G− W−B	Idling	Pulse generation (See waveform 1)
#40 (E5−5) − E01 (E7−7)	R−B − W−B		
#50 (E5−6) − E01 (E7−7)	L − W−B		
#60 (E5−7) − E01 (E7−7)	Y − W−B		

KNK1 (E6−29) − EKNK (E6−28)	G − R	Maintain engine speed at 4,000 rpm after warming up	Pulse generation (See waveform 2)
KNK2 (E6−21) − EKN2 (E6−20)	W − B		
OC1+ (E5−17) − OC1− (E5−16)	W−R − G−B	Accelerate slowly after engine warmed−up	Pulse generation (See waveform 3)
OC2+ (E5−15) − OC2− (E5−14)	L−R − V	Accelerate slowly after engine warmed−up	Pulse generation (See waveform 3)
VV1+ (E5−19) − VV1− (E5−29)	L − Y	Idling	Pulse generation (See waveform 4)
VV2+ (E5−18) − VV2− (E5−28)	L − G	Idling	Pulse generation (See waveform 4)
NE+ (E5−21) − NE− (E5−20)	R − G	Idling	Pulse generation (See waveform 4)
PRG (E7−34) − E1 (E5−1)	G−W − BR	IG switch ON	9 to 14 V
SPD (E4−8) − E1 (E5−1)	G−O − BR	IG switch ON, Rotate driving wheel slowly	Pulse generation (See waveform 5)
M+ (E7−5) − E1 (E5−1)	G − BR	Idling	Pulse generation (See waveform 6)
M− (E7−4) − E1 (E5−1)	R − BR	Idling	Pulse generation (See waveform 7)
FPR (E5−30) − E1 (E5−1)	R−G − BR	IG switch ON	0 to 3.0 V
FC (E3−10) − E1 (E5−1)	Y − BR	IG switch ON	9 to 14 V
IGT1 (E7−8) − E1 (E5−1) IGT2 (E7−9) − E1 (E5−1) IGT3 (E7−10) − E1 (E5−1) IGT4 (E7−11) − E1 (E5−1) IGT5 (E7−12) − E1 (E5−1) IGT6 (E7−13) − E1 (E5−1)	B−L − BR L−W − BR LG − BR V − BR L−B − BR R−W − BR	Idling	Pulse generation (See waveform 9)
IGF1 (E7−24) − E1 (E5−1)	B−Y − BR	IG switch ON	4.5 to 5.5 V
		Idling	Pulse generation (See waveform 8)
HA1A (E6−2) − E1 (E5−1)	Y − BR	Idling	Below 3.0 V
HA2A (E6−1) − E1 (E5−1)	G − BR	IG switch ON	9 to 14 V
A1A+ (E6−22) − E1 (E5−1)	V − BR	Always (Ignition switch ON)	3.3 V*1
A1A− (E6−30) − E1 (E5−1)	P − BR	Always (Ignition switch ON)	3.0 V*1
A2A+ (E6−23) − E1 (E5−1)	G − BR	Always (Ignition switch ON)	3.3 V*1
A2A− (E6−31) − E1 (E5−1)	P − BR	Always (Ignition switch ON)	3.0 V*1
HT1B (E7−1) − E1 (E5−1)	L − BR	Idling	Below 3.0 V
HT2B (E6−5) − E1 (E5−1)	G−B − BR	IG switch ON	9 to 14 V
OX1B (E7−18) − E2 (E7−28)	B − B−W	Idling	Pulse generation (See waveform 9)
OX2B (E6−33) − E2 (E7−28)	B − B−W	Idling	Pulse generation (See waveform 9)
STP (E3−15) − E1 (E5−1)	G−W − BR	Brake pedal is depressed	7.5 to 14 V
		Brake pedal is released	Below 1.5 V
STI− (E3−16) − E1 (E5−1)	B − BR	Brake pedal is depressed	Below 1.5 V
		Brake pedal is released	7.5 to 14 V
STA (E5−11) − E1 (E5−1)	B − BR*1 P − BR*2	Shift lever position P or N, Ignition switch START	6.0 V or more
STSW (E5−12) − E1 (E5−1)	R−L − BR	Shift lever position P or N, ignition switch START	6.0 V or more

NSW (E6−8) − E1 (E5−1)	L−R − BR	IG switch ON, Other shift position in P, N	9 to 14 V
		IG switch ON, Shift position in P, N	0 to 3.0 V
W (E4−30) − E1 (E5−1)	V−G − BR	Idling	9 to 14 V
		IG switch ON	Below 3.0 V
TACH (E4−1) − E1 (E5−1)	L−W − BR	Idling	Pulse generation (See waveform 10)
ACIS (E7−33) − E1 (E5−1)	B − BR	IG switch ON	9 to 14 V
VPMP (E3−5) − E1 (E5−1)	L−B − BR	Ignition switch ON	9 V to 14 V
MPMP (E3−6) − E1 (E5−1)	R−W − BR	• Vacuum pump OFF • Vacuum pump ON	0 V to 3 V 9 V to 14 V
PPMP (E3−22) − E1 (E5−1)	L−W − BR	Ignition switch ON	3 V to 3.6 V

*1: M/T
*2: A/T

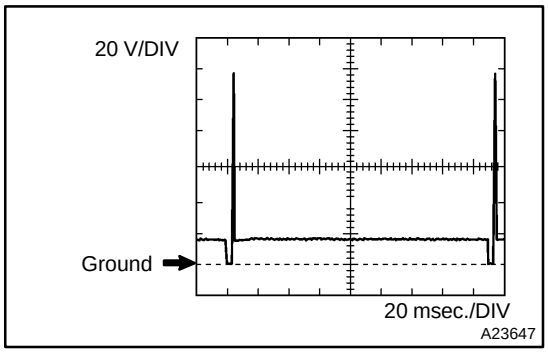

WAVEFORM 1

Fuel injector

ECM Terminal Names	Between #10 (to 60) and E01
Tester Ranges	20 V/DIV, 20 msec./DIV
Conditions	Idling

HINT:

The wavelength becomes shorter as the engine rpm increases.

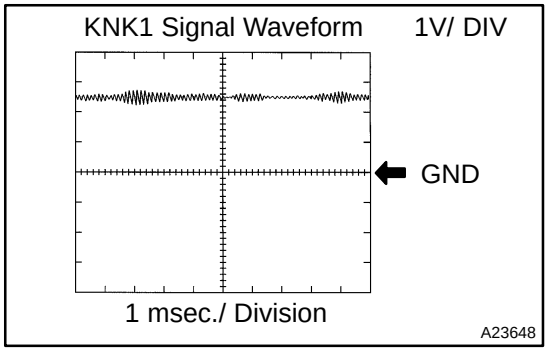

WAVEFORM 2

Knock sensor

ECM Terminal Name	Between KNK1 and EKNK Between KNK2 and EKN2
Tester Range	1 V/DIV, 1 msec./DIV
Condition	Maintain engine RPM at 2,000 rpm after engine warmed−up

HINT:

- The wavelength becomes shorter as engine rpm increases.
- The waveforms and amplitudes displayed differ slightly depending on the vehicle.

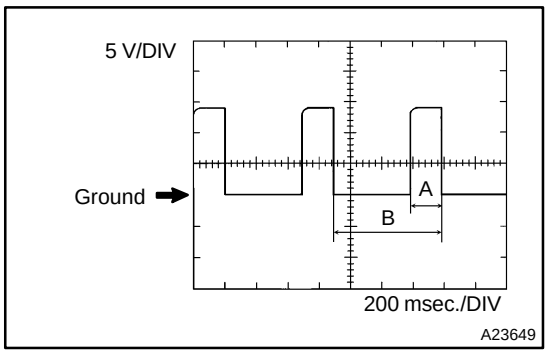

WAVEFORM 3

VVT OCV

ECM Terminal Name	Between OC1+ and OC1− Between OC2+ and OC2−
Tester Range	0.2 V/DIV, 200 msec./DIV
Condition	Accelerate slowly after engine warmed−up

HINT:

In the DATA LIST, the items VVT OCV DUTY B1 and B2 show the duty ratio of voltage flowing to the OCV (see illustration on left).

VVT OCV DUTY B1, B2 = A/B x 100 (%)

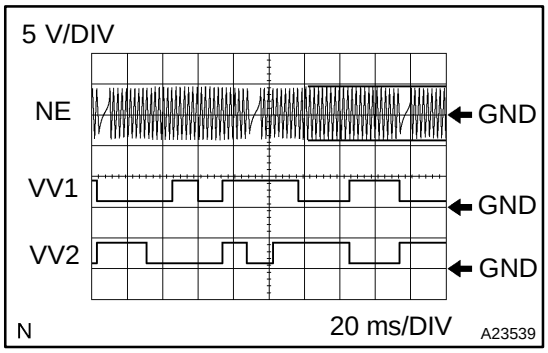

WAVEFORM 4

(a) VVT sensor bank 1

(b) VVT sensor bank 2

(c) Crankshaft position sensor

ECM Terminal Name	(a) Between VV1+ and VV1− (b) Between VV2+ and VV2− (c) Between NE+ and NE−
Tester Range	5 V/DIV, 20 msec./DIV
Condition	Idle after engine warmed−up

HINT:

The wavelength becomes shorter as the engine rpm increases.

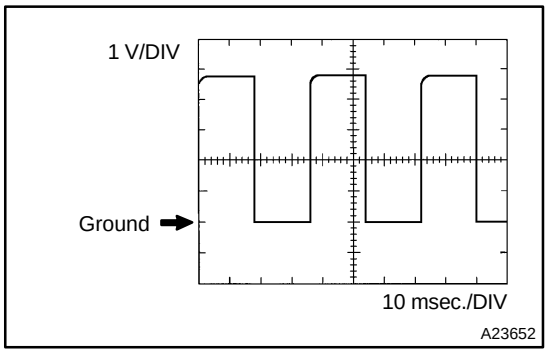

WAVEFORM 5

Vehicle speed signal

ECM Terminal Name	Between SPD and E1
Tester Range	5 V/DIV, 10 msec./DIV
Condition	Driving by 40 km/h (25 mph)

HINT:

The wavelength becomes shorter as vehicle speed increases.

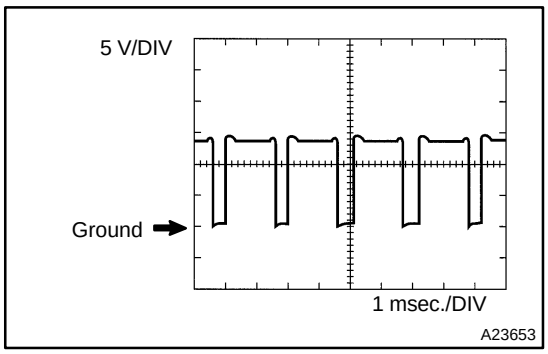

WAVEFORM 6

Throttle actuator positive terminal

ECM Terminal Name	Between M+ and ME01
Tester Range	5 V/DIV, 1 msec./DIV
Condition	Idle after engine warmed−up

HINT:

The duty ratio varies depending on the throttle opening operation.

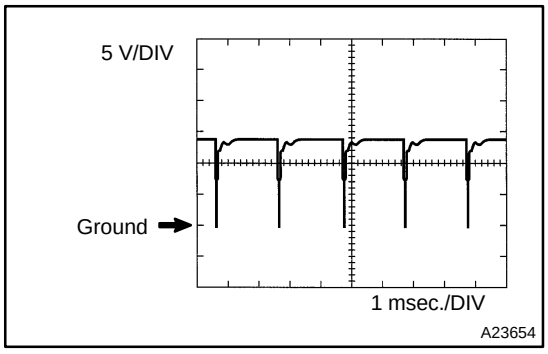

WAVEFORM 7

Throttle actuator negative terminal

ECM Terminal Name	Between M− and ME01
Tester Range	5 V/DIV, 1 msec./DIV
Condition	Idle after engine warmed−up

HINT:

The duty ratio varies depending on the throttle opening operation.

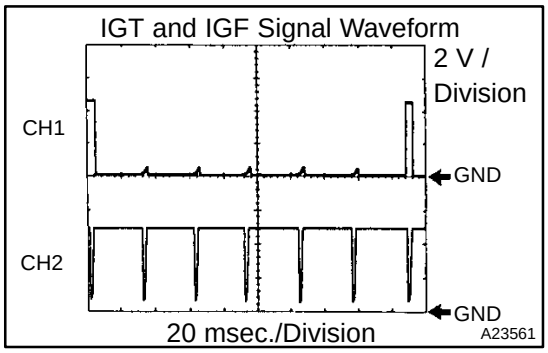

WAVEFORM 8

(a) Igniter IGT signal (from ECM to igniter)

(b) Igniter IGF1 signal (from igniter to ECM)

ECM Terminal Name	(a) Between IGT1 (to IGT6) and E1 (b) Between IGF1 and E1
Tester Range	2 V/DIV, 20 msec./DIV
Condition	Idling

HINT:

The wavelength becomes shorter as vehicle speed increases.

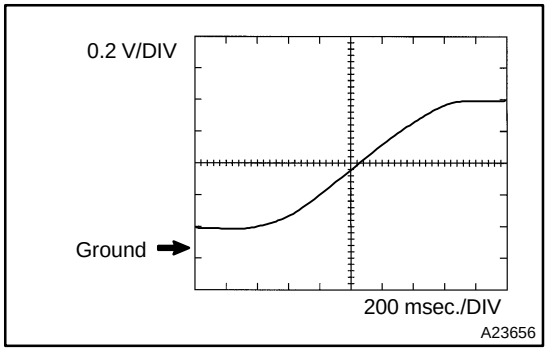

WAVEFORM 9

Heated oxygen sensor

ECM Terminal Names	Between OX1B and E2
Tester Ranges	0.2 V/DIV, 200 msec./DIV
Conditions	Engine speed maintained 2,500 rpm for 2 minutes after warming up sensor

HINT:

In the DATA LIST, item O2S B1S2 shows the ECM input values from the heated oxygen sensor.

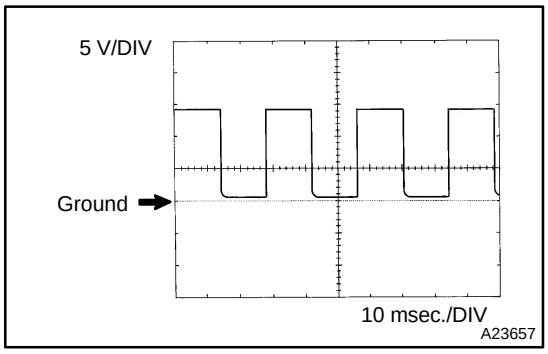

WAVEFORM 10

Engine speed signal

ECM Terminal Names	Between TACH and E1
Tester Ranges	5 V/DIV, 10 msec./DIV
Conditions	Idling

HINT:

The wavelength becomes shorter as vehicle speed increases.

DIDQW−01

BASIC INSPECTION

When the malfunction is not confirmed in the DTC check, troubleshooting should be carried out in all the possible circuits considered as causes of the problem. In many cases, by carrying out the basic engine check shown in the following flowchart, the location causing the problem can be found quickly and efficiently. Therefore, using this check is essential in the engine troubleshooting.

1	**Is battery voltage 11 V or more when engine stopped?**

NO → **Charge or replace battery.**

YES

2	**Is engine cranked?**

NO → **Proceed to page ST−18 and continue to troubleshoot.**

YES

3	**Does engine start?**

NO → **Go to step 6.**

YES

4	**Check air filter.**

PREPARATION:
Remove the air filter.
CHECK:
Visual check that the air filter is not excessively dirty or oily.

NG → **Repair or replace air filter.**

OK ↓

5	**Check idle speed (See page EM−11).**

NG → **Proceed to problem symptoms table on page DI−452.**

OK ↓

6	**Check fuel pressure (See page SF−7).**

NG → **Proceed to page SF−7 and continue to trouble-shoot.**

OK ↓

7	**Check for spark (See page IG−1).**

NG → **Proceed to page IG−1 and continue to trouble-shoot.**

OK ↓

Proceed to problem symptoms table on page DI−452.

DIDQV−01

CHECK FOR INTERMITTENT PROBLEMS

HINT:

Hand−held tester only:

Inspect the vehicle’s ECM using check mode. Intermittent problems are easier to detect with a hand−held tester when the ECM is in check mode. In check mode, the ECM uses 1trip detection logic, which is more sensitive to malfunctions than normal mode (default), which uses 2 trip detection logic.

(a) Clear DTCs (see page DI−462).

(b) Switch the ECM from normal mode to check mode using a hand−held tester (see page DI−463).

(c) Perform a simulation test (see page IN−19).

(d) Check and wiggle the harness(es), connector(s) and terminal(s) (see page IN−30).

DIDSG−01

IACV Control Circuit

CIRCUIT DESCRIPTION

This circuit opens and closes the Intake Air Control Valve (IACV) in response to the engine load in order to increase the intake efficiency (ACIS: Acoustic Control Induction System).
When the engine speed is 4,700 rpm or more and the throttle valve opening angle is 60° or more, the VSV is OFF, so the is IACV open. All the other times, the ECM turns the VSV ON and closes the IACV.

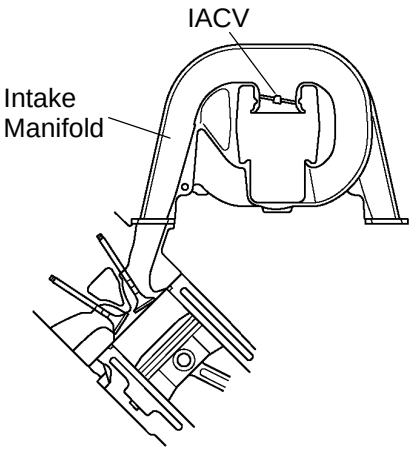

A01995 A15196

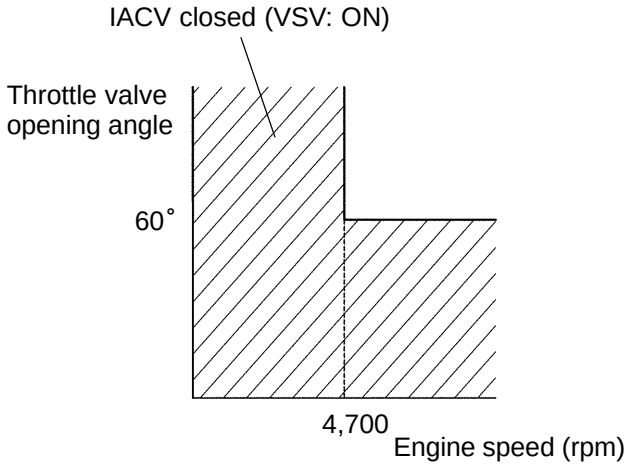

A15197

WIRING DIAGRAM

Access Cab, Standard Cab:

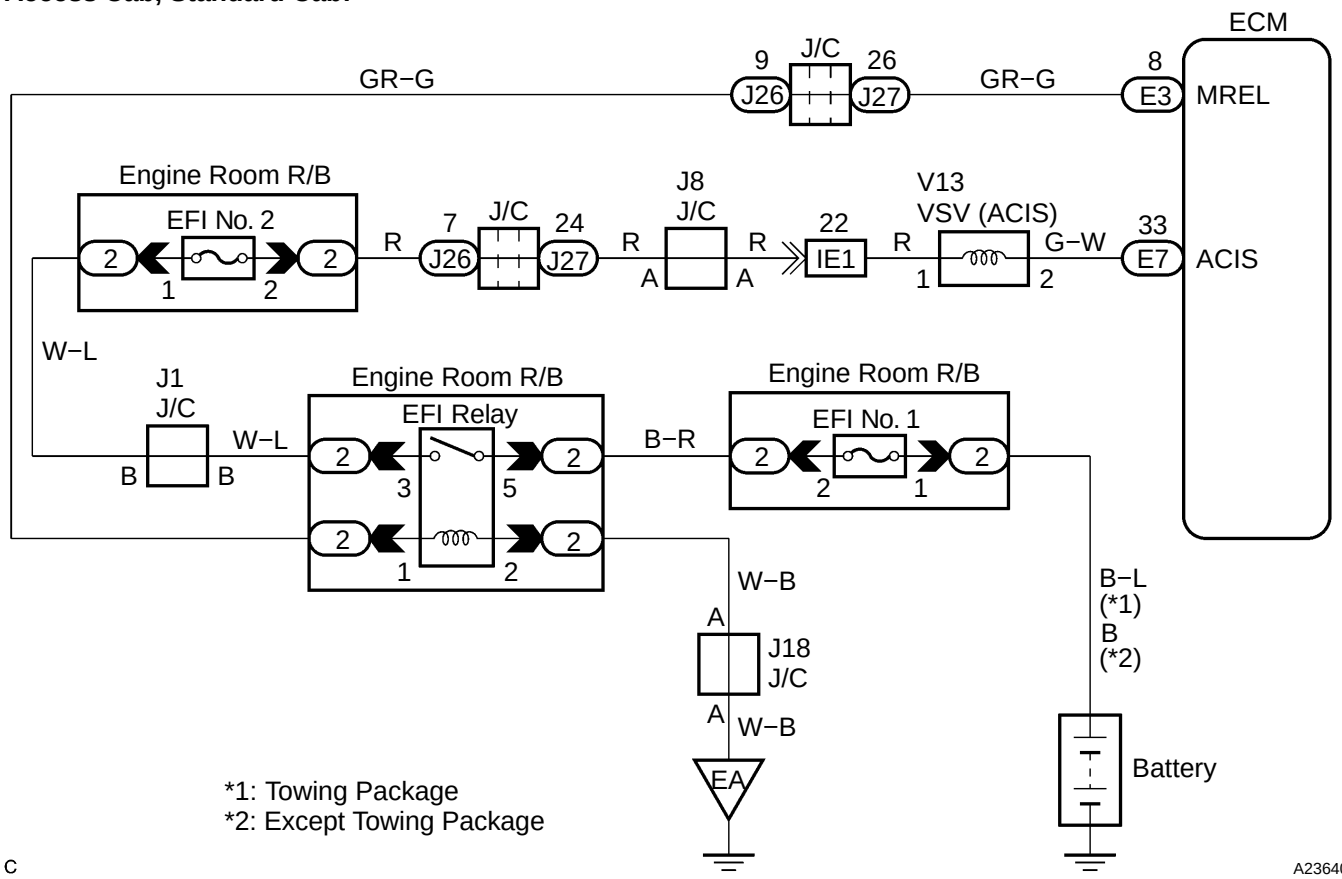

Double Cab:

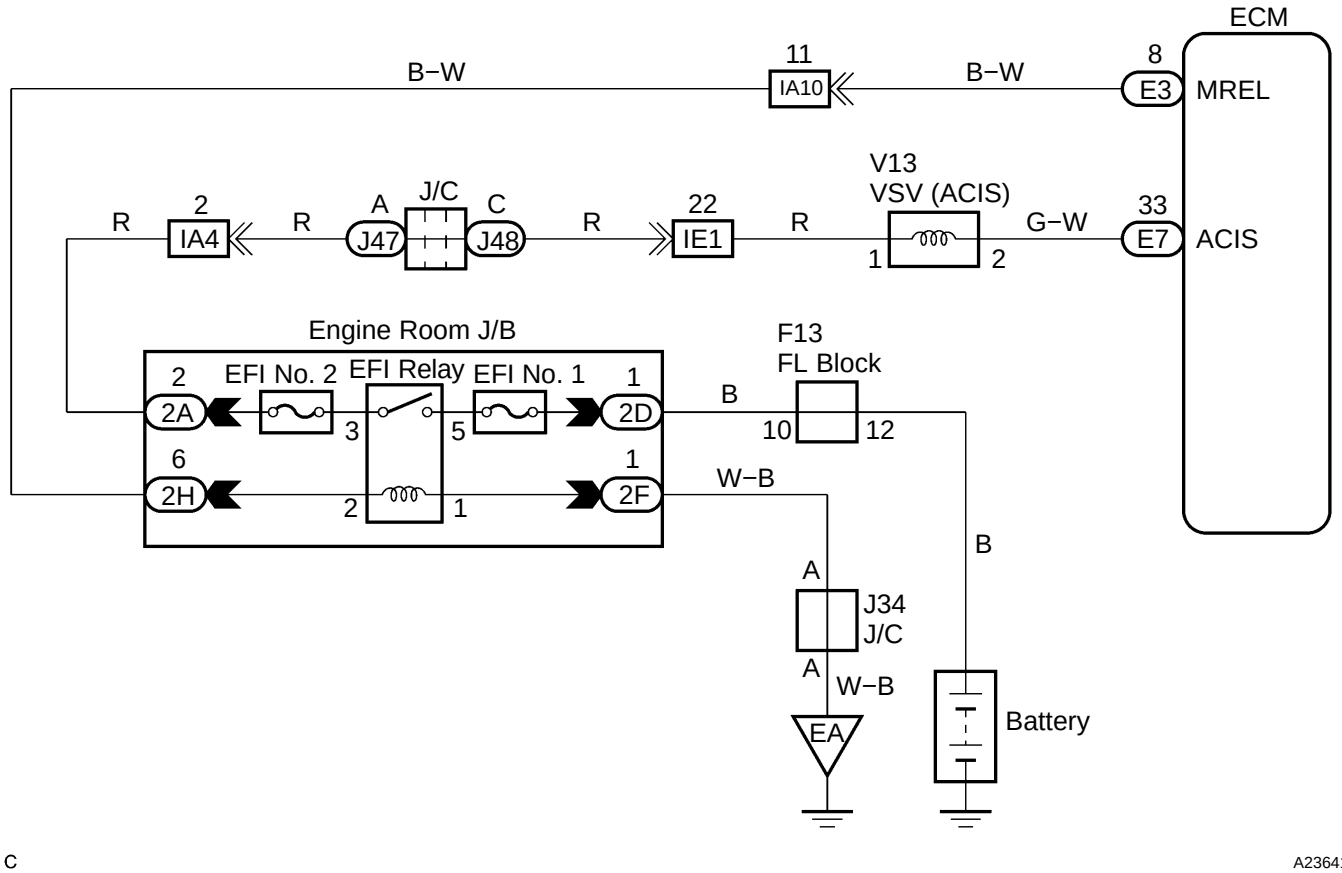

INSPECTION PROCEDURE

1	**Connect hand−held tester, and check operation of VSV for ACIS.**

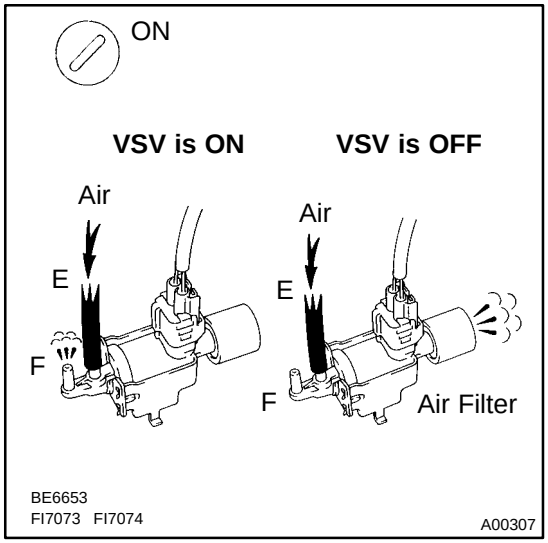

PREPARATION:

(a) Connect the hand−held tester to the DLC3.

(b) Turn the ignition switch ON and push the hand−held tester main switch ON.

(c) Select the ACTIVE TEST mode on the hand−held tester.

CHECK:

Check the operation of the VSV when the VSV is operated by the hand−held tester.

OK:

VSV is ON:
Air from port E flows out through port F.
VSV is OFF:
Air from port E flows out through the air filter.

OK → **Check for vacuum tank (See page SF−56).**

NG

2	**Check VSV for ACIS (See page SF−51).**

NG → **Replace VSV for ACIS.**

OK

3	**Check for open and short in harness and connector between EFI main relay (Marking: EFI) and ECM (See page IN−30).**

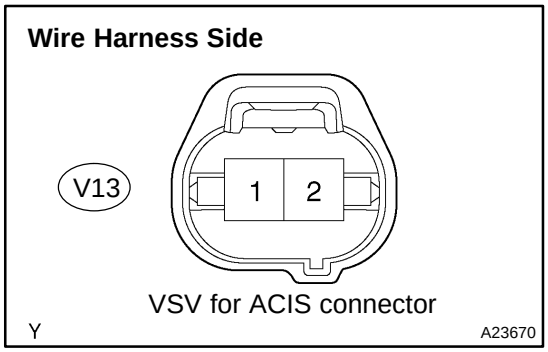

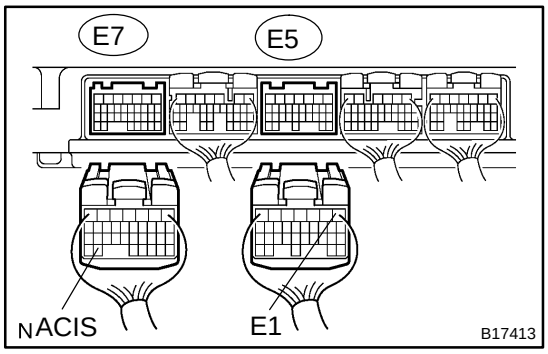

(a) Check the wire harness between the VSV for ACIS and connector the ECM connector.
  (1) Disconnect the VSV for ACIS connector.
  (2) Disconnect the E5 and E7 ECM connector.
  (3) Check for resistance between the wire harness side connectors.

Standard (Check for open):

Symbols (Terminal No.)	Specified condition
VSV for ACIS (V13−2) − ACIS (E7−33)	Below 1 Ω

Standard (Check for short):

Symbols (Terminal No.)	Specified condition
VSV for ACIS (V13−2) or ACIS (E7−33) − E1 (E5−1)	10 kΩ or higher

(b) Check the wire harness between the VSV for ACIS connector and the EFI relay.
  (1) Disconnect the VSV for ACIS connector.
  (2) Remove the EFI relay from the engine room R/B.
  (3) Check for resistance between the wire harness side connectors.

Standard (Check for open):

Symbols (Terminal No.)	Specified condition
VSV for ACIS (V13−1) − EFI relay terminal 3 of R/B	Below 1 Ω

NG → **Repair or replace harness or connector.**

OK

Replace ECM (See page SF−82).

Cranking Hold Function Circuit

CIRCUIT DESCRIPTION

The starter is controlled by the ECM, when the ECM detects a start signal (STSW) from the ignition switch, this system monitors the engine speed (NE) and continues to operate the starter until it has determined that the engine has started (engine speed reaches approximately 500 rpm). If the engine is already running and the ignition switch is turned to START, the ECM will not operate the starter.

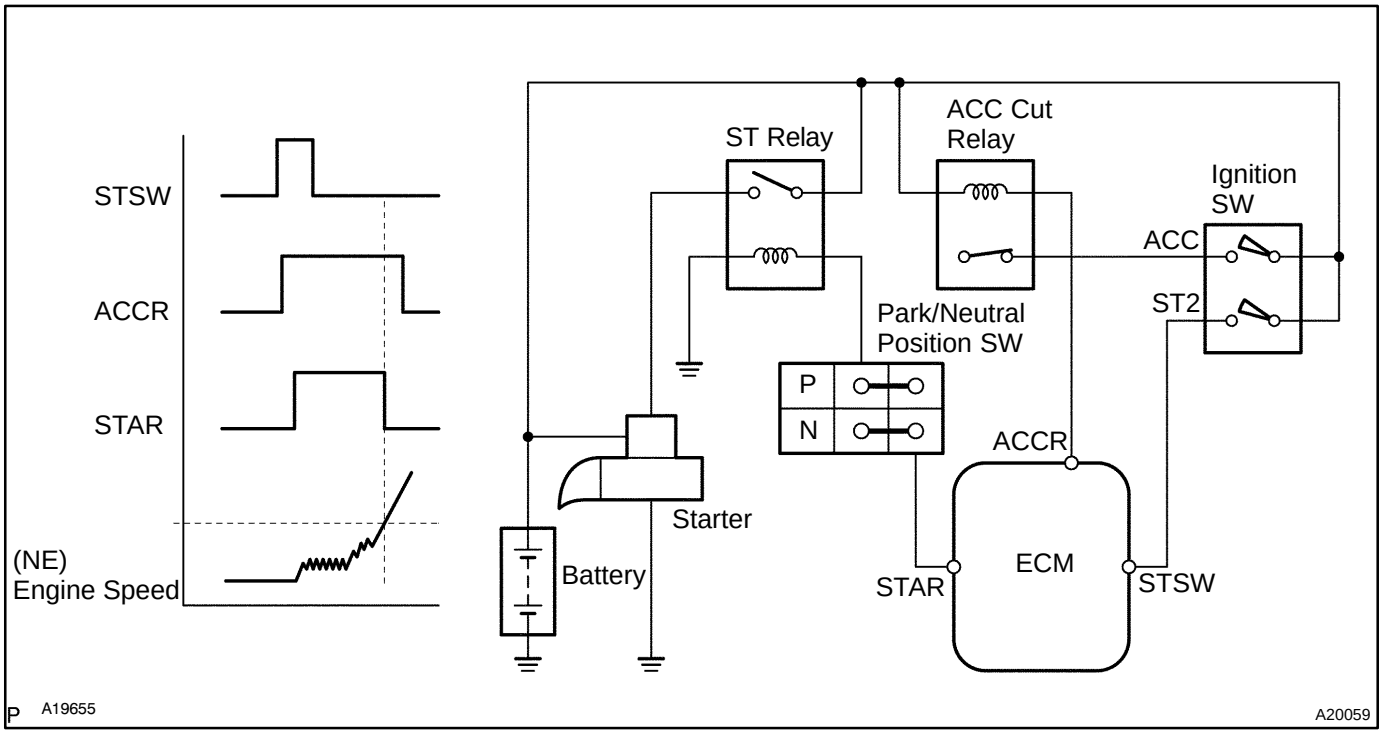

WIRING DIAGRAM

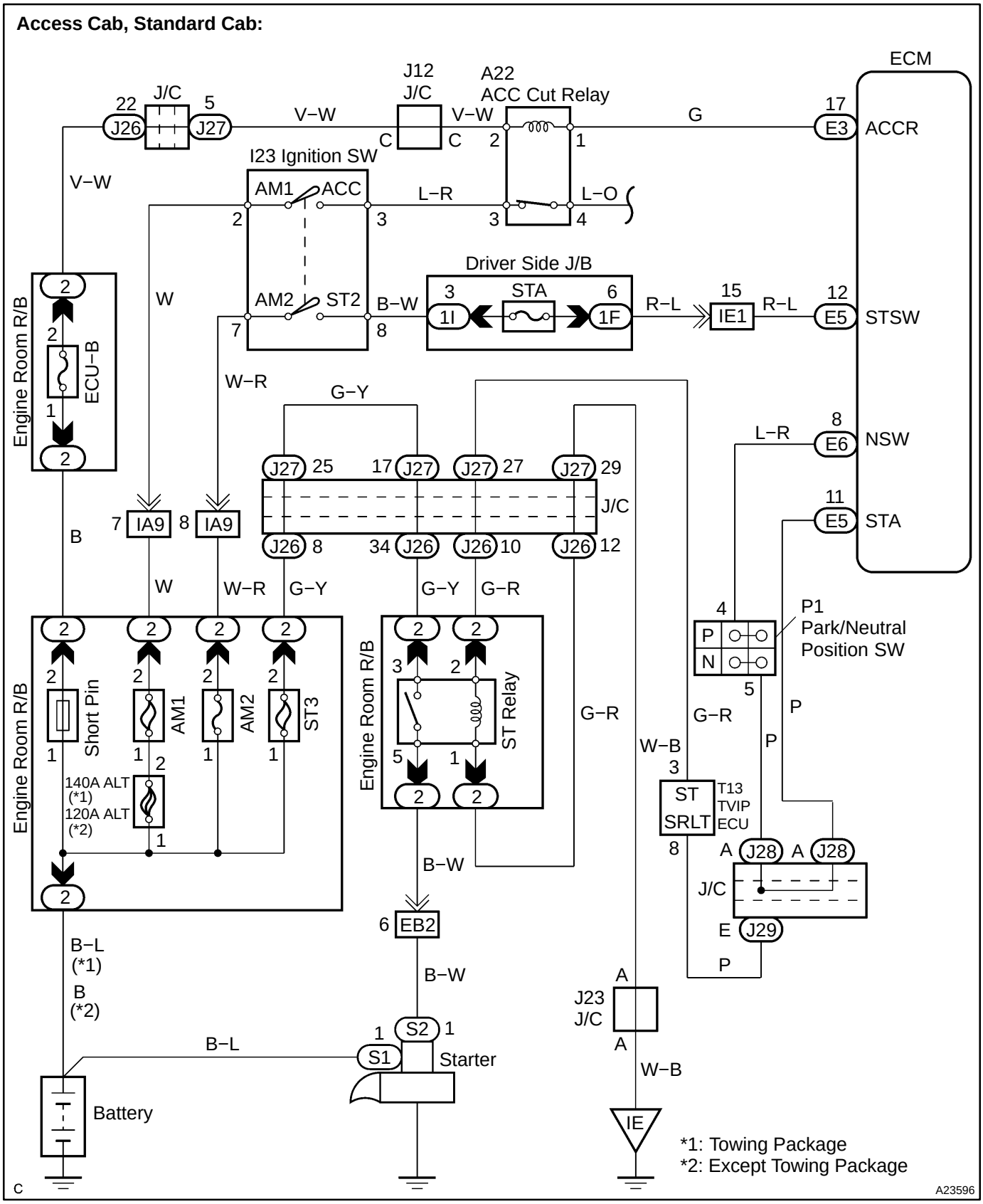

Double Cab:

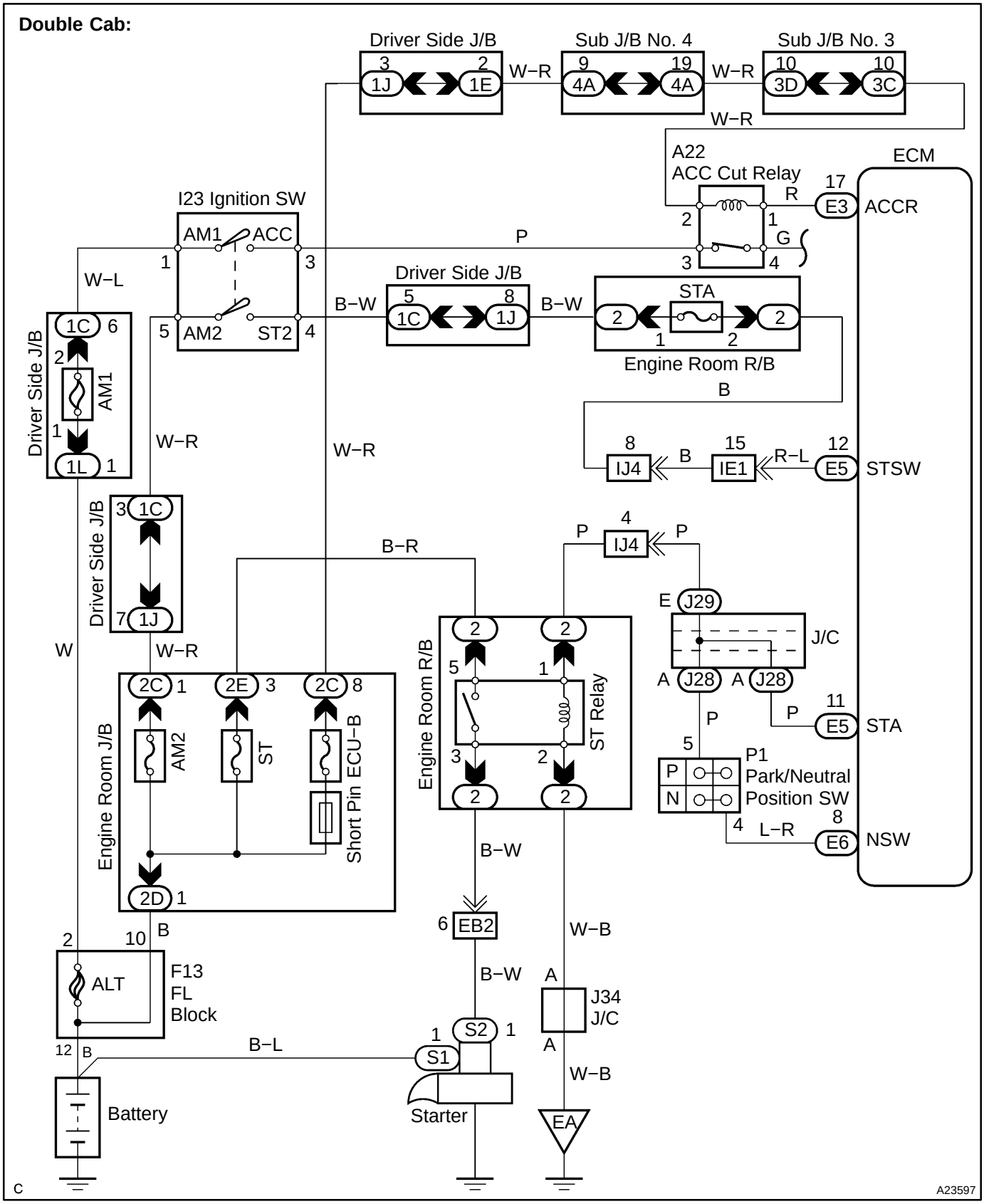
Driver Side J/B
Sub J/B No. 4
Sub J/B No. 3
3
2
1J
1E
W−R
9
19
4A
4A
W−R
10
10
3D
3C
W−R
A22
ACC Cut Relay
ECM
17
R
E3
ACCR
2
1
G
3
4
I23 Ignition SW
AM1
ACC
P
1
3
W−L
Driver Side J/B
B−W
5
8
1C
1J
B−W
STA
2
2
1
2
Engine Room R/B
5
AM2
ST2
4
1C
6
2
AM1
1
1L
1
Driver Side J/B
B
W−R
W−R
8
IJ4
B
15
IE1
R−L
12
E5
STSW
3
1C
7
1J
Driver Side J/B
4
P
IJ4
P
B−R
E
J29
J/C
W
W−R
2
2
5
1
A
J28
A
J28
2C
1
2E
3
2C
8
Engine Room R/B
ST Relay
P
11
E5
STA
AM2
ST
Short Pin ECU−B
3
2
5
P1
Park/Neutral
Position SW
P
N
2
2
4
L−R
8
E6
NSW
Engine Room J/B
2D
1
B−W
6
EB2
W−B
2
10
B
B−W
A
ALT
F13
FL
Block
J34
J/C
1
S2
1
12
B
B−L
S1
A
W−B
Battery
Starter
EA
C
A23597

INSPECTION PROCEDURE

Hand−held tester:

1	**Check operation of engine cranking.**

CHECK:

When turning the ignition switch to the START position, check whether the starter motor starts.

OK:

Starter motor starts.

OK → **Check for intermittent problems (See page DI−430).**

NG

2	**Connect hand−held tester, and check STA signal.**

PREPARATION:

(a) Connect the hand−held tester to the DLC3.
(b) Turn the ignition switch ON, and push the hand−held tester main switch ON.
(c) Enter the following menu: DIAGNOSIS / ENHANCED OBD II / DATA LIST / ALL / STARTER SIG.

CHECK:

Read the STA signal on the hand−held tester while the starter operates.

OK:

Ignition Switch Position	ON	START
STARTER SIG	OFF	ON

NG → **Go to step 5.**

OK

3	Check voltage between terminal STAR, STSW and E1 of ECM connector.

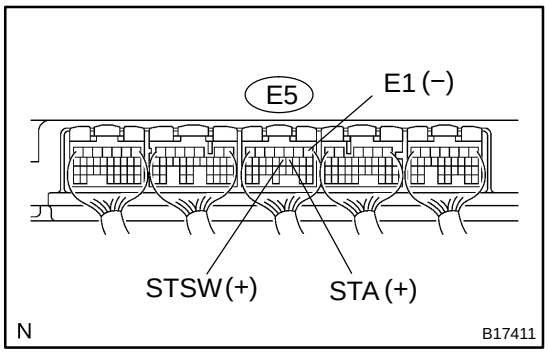

CHECK:

Measure the voltage between the terminals of the E5 ECM connectors, while cranking the engine (ignition switch START position).

OK:

Standard:

Tester Connection	Specified Condition
STA (E5−11) − E1 (E5−1)	9 to 14 V
STSW (E5−12) − E1 (E5−1)	9 to 14 V

RESULT:

Terminal STAR	Terminal STSW	Proceed to
9 to 14 V	9 to 14 V	A
0 V	9 to 14 V	B
0 V	0 V	C

B	**Replace ECM (See page SF−82).**
C	**Go to step 9.**

A

4	Check park/neutral position switch.

Component Side:

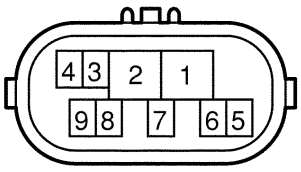

P D14154

PREPARATION:

Remove the P1 park/neutral position switch connector.

CHECK:

Check resistance between each terminal shown below when the shift lever is moved to each range.

Shift range	Terminal No. to continuity	
P	1 − 3	6 − 9
R	2 − 3	−
N	3 − 5	6 − 9
D	3 − 7	−
2	3 − 4	−
L	3 − 8	−

OK:

Below 1 Ω

NG → **Replace the park/neutral position switch.**

OK

Check and repair harness and connector between park/neutral position switch and ECM.

5	Check starter relay.

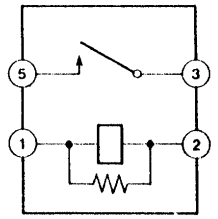

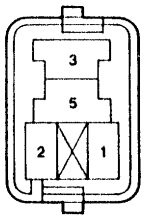

A19288

(a) Remove the starter relay from the engine room R/B.

(b) Inspect the starter relay.

Standard:

Tester Connection	Specified Condition
3 − 5	10 kΩ or higher
3 − 5	Below 1 Ω (Apply battery voltage to terminals 1 and 2)

NG → **Replace starter relay.**

OK

6	**Check for open and short in harness and connector between park/neutral position switch and starter relay.**

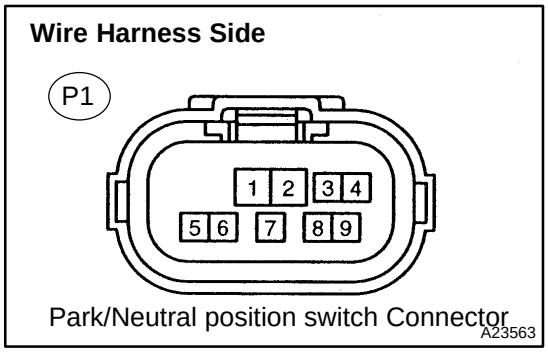

(a) Check the harness and the connector between the park/neutral position switch connector and the starter relay.
(1) Disconnect the park/neutral position switch connector.
(2) Remove the starter relay from the engine room R/B.
(3) Check for resistance between the wire harness side connectors.

Standard (Check for open):

Symbols (Terminal No.)	Specified condition
Park/Neutral position switch (P1−6) − Starter relay (1)	Below 1 Ω

Standard (Check for short):

Symbols (Terminal No.)	Specified condition
Park/Neutral position switch (P1−6) or Starter relay (1) − Body ground	10 kΩ or higher

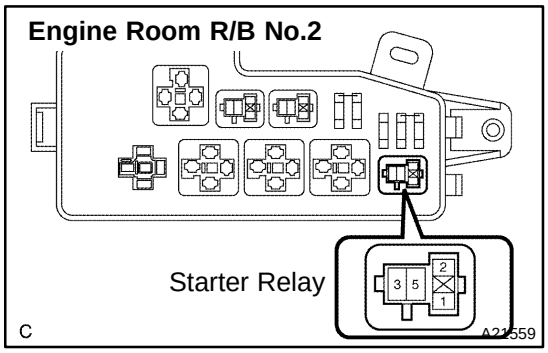

(b) Check the harness and the connector between the starter relay and the body ground.
(1) Remove the starter relay from the engine room R/B.
(2) Check for resistance between the starter relay and the body ground.

Standard (Check for open):

Symbols (Terminal No.)	Specified condition
Starter relay (2) − Body ground	Below 1 Ω

NG → **Repair or replace harness or connector.**

OK

7	Check engine room R/B No.2 (Starter relay voltage).

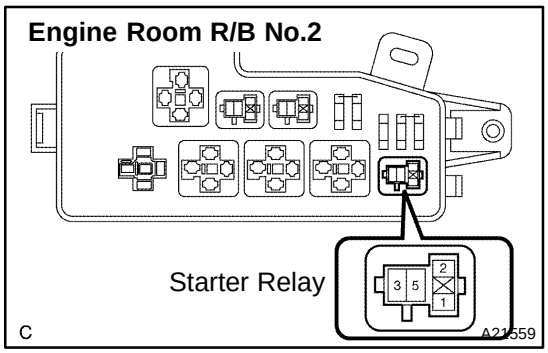

PREPARATION:

Remove the starter relay from the engine room R/B No.2.

CHECK:

Measure the voltage between the terminal of the engine room R/B and body ground.

OK:

Standard:

Tester Connection	Specified Condition
Starter relay (5) − Body ground	9 to 14 V

NG → **Check and repair harness and connector between starter relay and battery.**

OK

8	Check starter (See page ST−18).

NG → **Repair or replace starter.**

OK

9	Check ignition switch.

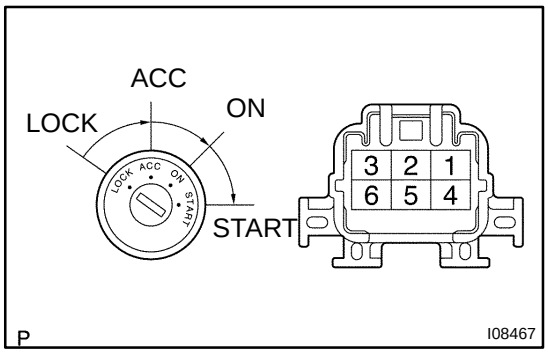

PREPARATION:

(a) Remove the lower finish panel.

(b) Disconnect the ignition switch connector.

CHECK:

Check resistance between terminals.

OK:

Standard:

Switch Position	Terminal Condition	Specified Condition
LOCK	Always	10 kΩ or more
ACC	1 − 3	Below 1 Ω
ON	1 − 2 − 3 5 − 6	Below 1 Ω
START	1 − 2 4 − 5 − 6	Below 1 Ω

NG → **Replace ignition switch.**

OK →

Check for open in harness and connector between ECM and ignition switch, ignition switch and battery (See page IN−30).

DIDSE−01

ECM Power Source Circuit

CIRCUIT DESCRIPTION

When the ignition switch is turned ON, battery positive voltage is applied to terminal IGSW of the ECM and the EFI relay control circuit in the ECM sends a signal to terminal MREL of the ECM switching on the EFI relay.

This signal causes current to flow to the coil, closing the contacts of the EFI relay and supplying power to terminal +B of the ECM.

WIRING DIAGRAM

Access Cab, Standard Cab:

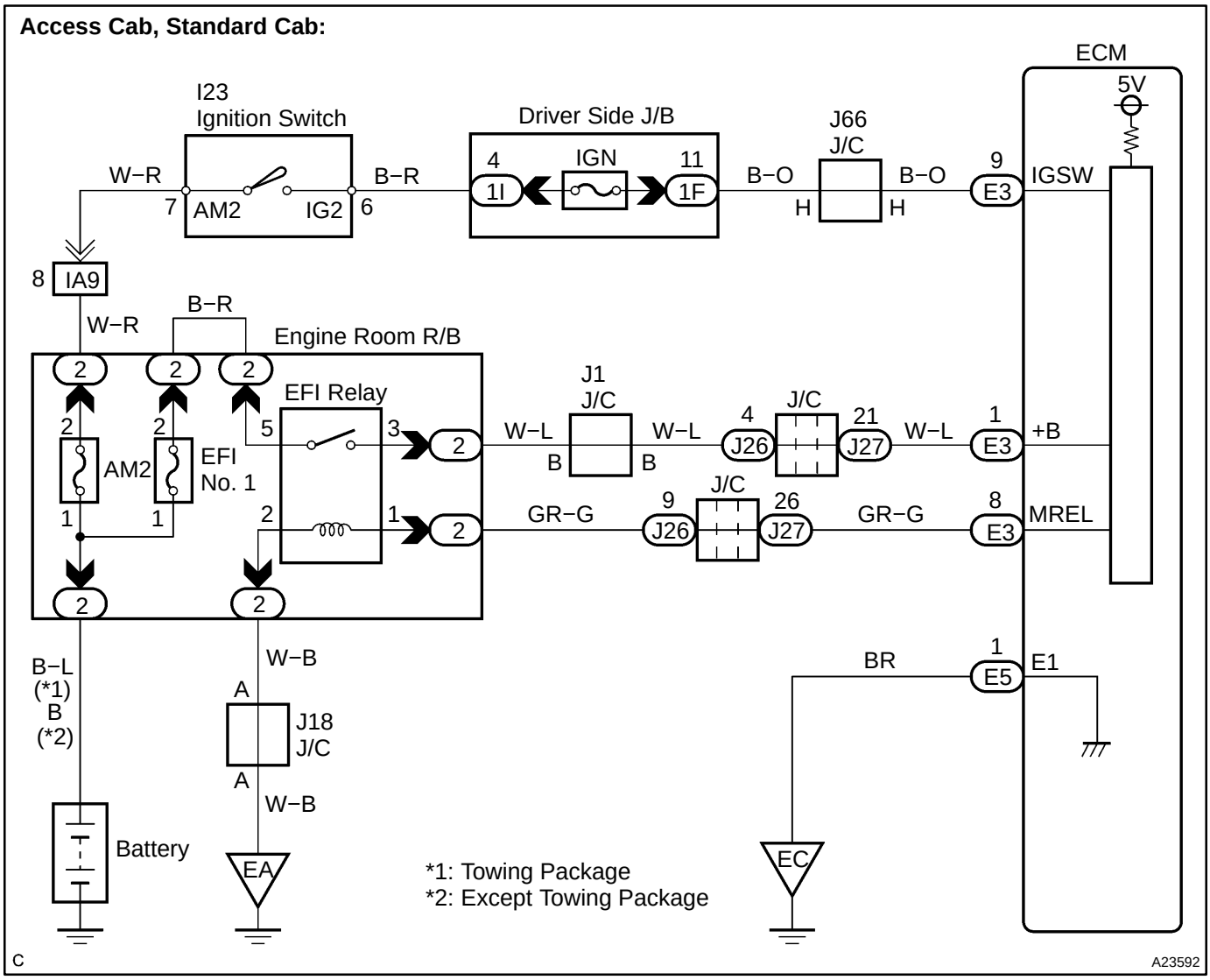

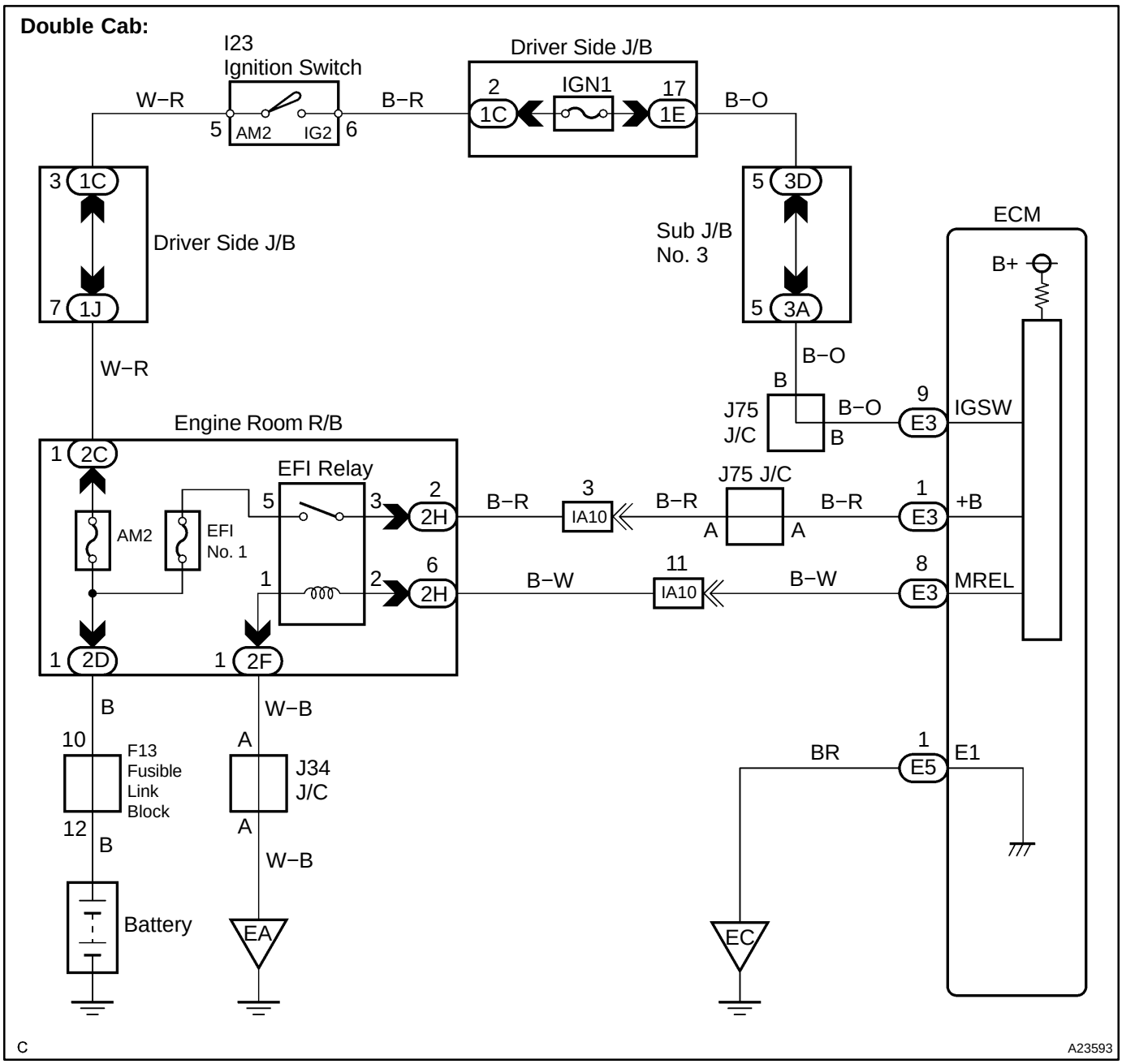
Double Cab:
I23
Ignition Switch
Driver Side J/B
IGN1
W−R
B−R
B−O
5
AM2
IG2
6
2
1C
17
1E
3
1C
7
1J
Driver Side J/B
5
3D
5
3A
Sub J/B
No. 3
ECM
B+
W−R
B−O
B
J75
J/C
B
B−O
9
E3
IGSW
Engine Room R/B
1
2C
EFI Relay
AM2
EFI
No. 1
5
3
2
2H
B−R
3
IA10
B−R
J75 J/C
A
A
B−R
1
E3
+B
1
6
2H
B−W
11
IA10
B−W
8
E3
MREL
1
2D
1
2F
B
W−B
10
F13
Fusible
Link
Block
A
J34
J/C
12
B
A
W−B
Battery
EA
BR
1
E5
E1
EC
C
A23593

INSPECTION PROCEDURE

1	**Check voltage between terminals +B and E1 of ECM connector.**

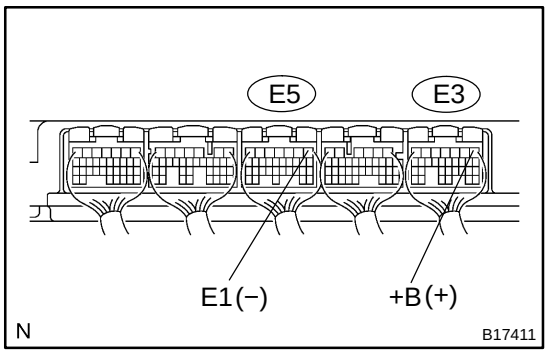

PREPARATION:
Turn the ignition switch ON.
CHECK:
Measure the voltage between terminals +B and E1 of the ECM connectors.
OK:
Standard: 9 to 14 V

OK	**Proceed to next circuit inspection shown in the Problem symptoms table (See page DI−452).**

NG

2	**Check for open in harness and connector between terminal E1 of ECM and body ground (See page IN−30).**

NG	**Repair or replace harness or connector.**

OK

3	**Check voltage between terminal IGSW of ECM connector and body ground.**

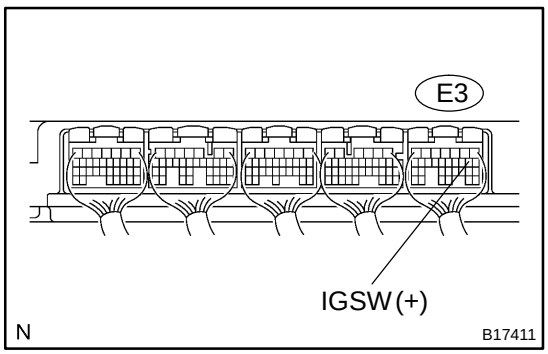

PREPARATION:
Turn the ignition switch ON.
CHECK:
Measure the voltage between terminal IGSW of the ECM connector and body ground.
OK:
Standard: 9 to 14 V

OK	**Go to step 6.**

NG

4	Check IGN1 fuse.

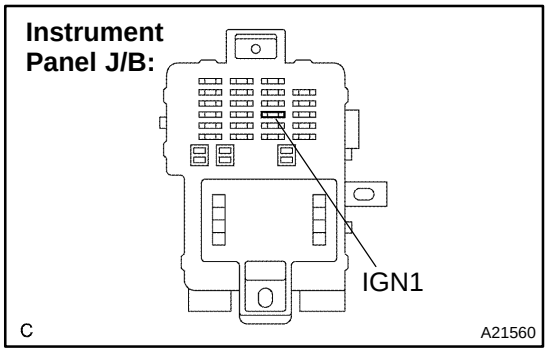

PREPARATION:
Remove the IGN1 fuse from the instrument panel J/B.
CHECK:
Check the resistance of the IGN1 fuse.
OK:
Below 1 Ω

NG → **Check for short in all harness and components connected to IGN1 fuse.**

OK

5	Check ignition switch (See page BE−37).

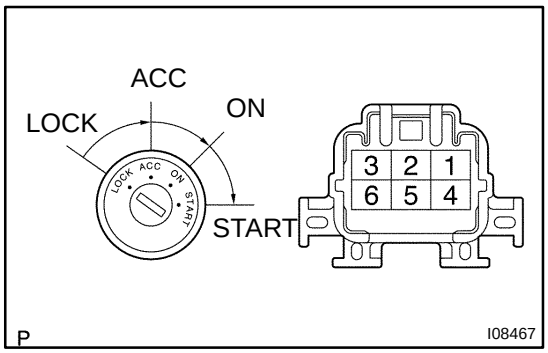

PREPARATION:
(a) Remove the lower finish panel.
(b) Disconnect the ignition switch connector.
CHECK:
Check resistance between terminals.
OK:
Standard:

Switch Position	Terminal Condition	Specified Condition
LOCK	Always	10 kΩ or more
ACC	1 − 3	Below 1 Ω
ON	1 − 2 − 3 5 − 6	Below 1 Ω
START	1 − 2 4 − 5 − 6	Below 1 Ω

NG → **Replace ignition switch.**

OK

Check and repair harness and connector between IGN fuse and ECM.

6	Check voltage between terminal MREL of ECM connector and body ground.

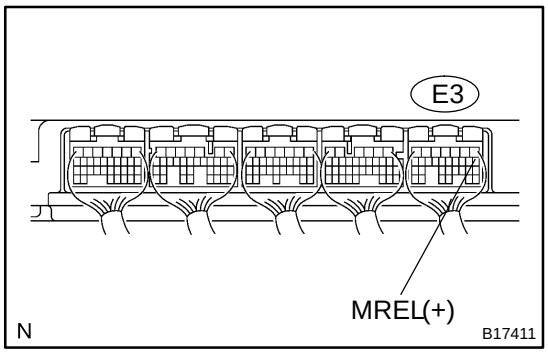

PREPARATION:
Turn the ignition switch ON.
CHECK:
Measure the voltage between terminal MREL of the ECM connector and body ground.
OK:
Standard: 9 to 14 V

NG	Replace ECM (See page SF−82).

OK

7	Check EFI No. 1 fuse of engine room J/B.

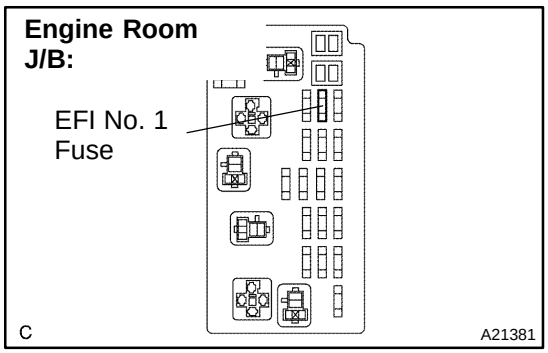

PREPARATION:
Remove the EFI No. 1 fuse from the engine room J/B.
CHECK:
Check resistance of EFI No. 1 fuse.
OK:
Below 1 Ω

NG	Check for short in all harness and components connected to EFI No. 1 fuse.

OK

8	Check EFI relay.

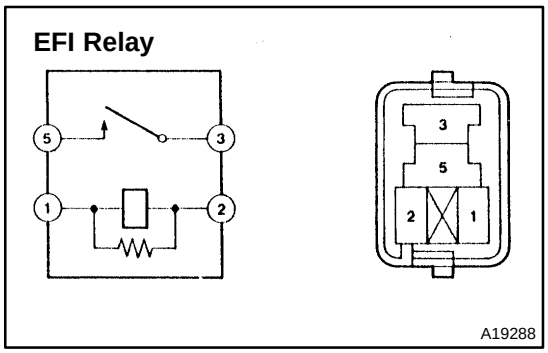

PREPARATION:
Remove the EFI relay from the engine room J/B.
CHECK:
Inspect the EFI relay.
OK:

Standard:

Terminal No.	Condition	Specified Condition
3 − 5	Always	10 KΩ or higher
3 − 5	Apply B+ between terminals 1 and 2	Below 1 Ω

NG → **Replace EFI relay.**

OK

9	Check for open and short in harness and connector between terminal MREL of ECM and body ground.

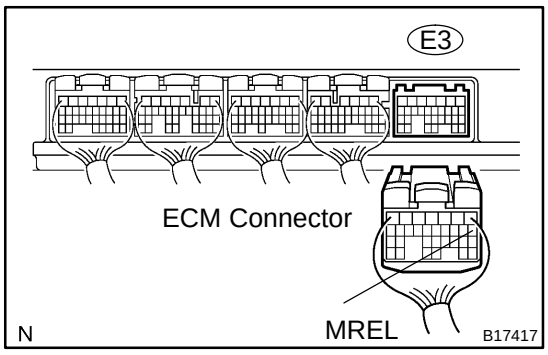

PREPARATION:
Disconnect the E3 ECM connector.
CHECK:
Measure the resistance between the wire harness side connector and body ground.
OK:

Standard:

Tester Connection	Specified Condition
MREL (E3−8) − Body ground	Below 1 Ω

NG → **Repair or replace harness or connector.**

OK

Check for intermittent problems (See page DI−430).

DIDSF−01

EVAP (Evaporative Emission) Inspection Procedure

DTCS RELATING TO EVAP SYSTEM

DTCs	Monitoring Items	See Page
P043E	0.02 inch orifice clogged (built into pump module)	DI−869
P043F	0.02 inch orifice high−flow (built into pump module)	DI−869
P0441	• Purge VSV (Vacuum Switching Valve) stuck closed • Purge VSV stuck open • Purge flow	DI−680
P0450	Pressure sensor (built into pump module) voltage abnormal fluctuation	DI−687
P0451	• Pressure sensor (built into pump module) noise • Pressure sensor (built into pump module) signal becomes fixed/flat	DI−687
P0452	Pressure sensor (built into pump module) voltage low	DI−687
P0453	Pressure sensor (built into pump module) voltage high	DI−687
P0455	EVAP gross leak	DI−696
P0456	EVAP small leak	DI−696
P2401	Vacuum pump stuck OFF (built into pump module)	DI−834
P2402	Vacuum pump stuck ON (built into pump module)	DI−834
P2419	Vent valve stuck closed (built into pump module)	DI−840
P2420	Vent valve stuck open (vent) (built into pump module)	DI−840
P2610	Soak timer (built into ECM)	DI−866

If any EVAP system DTCs are set, the malfunctioning area can be determined using the table below.

DTCs / Malfunctioning Areas	P043E P043F	P0441	P0450	P0451	P0452	P0453	P0455	P0456	P2401 P2402	P2419	P2420
0.02 inch orifice clogged	●								●	●	
0.02 inch orifice high−flow	●								●	●	
Purge VSV stuck open		●					●				
Purge VSV stuck closed		●									
Pressure sensor stuck				●							
Pressure sensor noise				●							
Pressure sensor low output			●		●						
Pressure sensor high output			●			●					
Gross leak		●					●				
Small leak								●			
Vacuum pump stuck OFF	●								●	●	
Vacuum pump stuck ON	●								●	●	
Vent valve stuck closed	●								●	●	
Vent valve stuck open (vent)											●

NOTICE:

If the 0.02 inch reference pressure difference between the first and second checks is greater than the specification, the DTCs corresponding to the reference pressure (P043E, P043F, P0441, P0455, P0456, P2401, P2420) will be all stored.

CIRCUIT DESCRIPTION

Location of EVAP (Evaporative Emission) system:

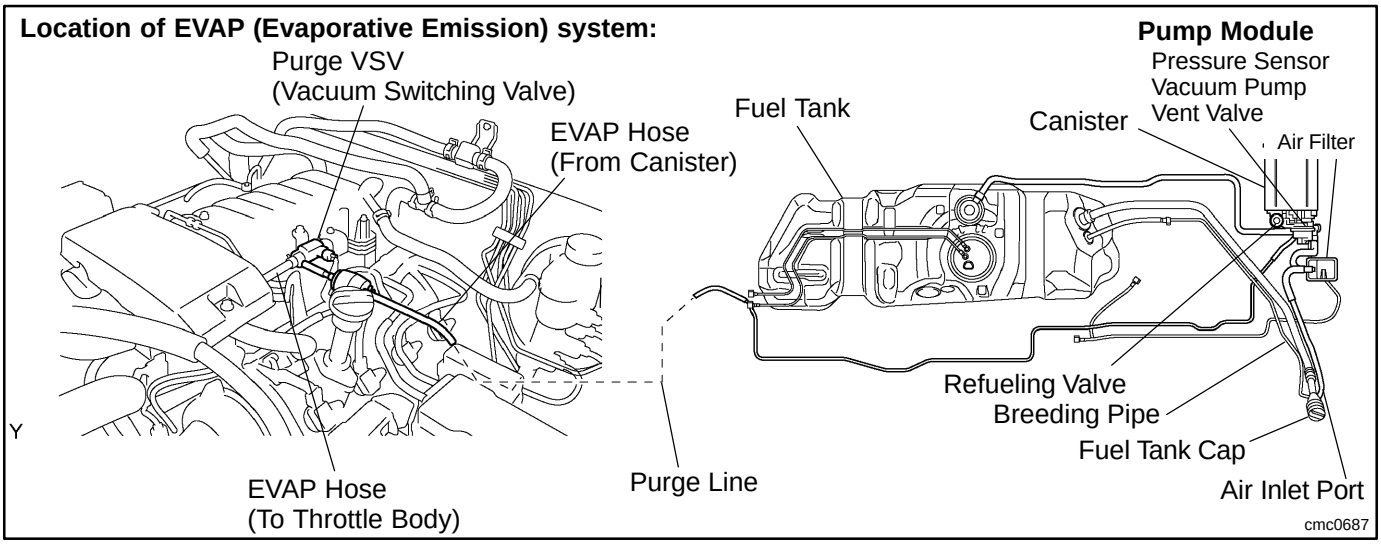

HINT:
The canister is located near the fuel tank, underneath the body.

EVAP System Circuit:

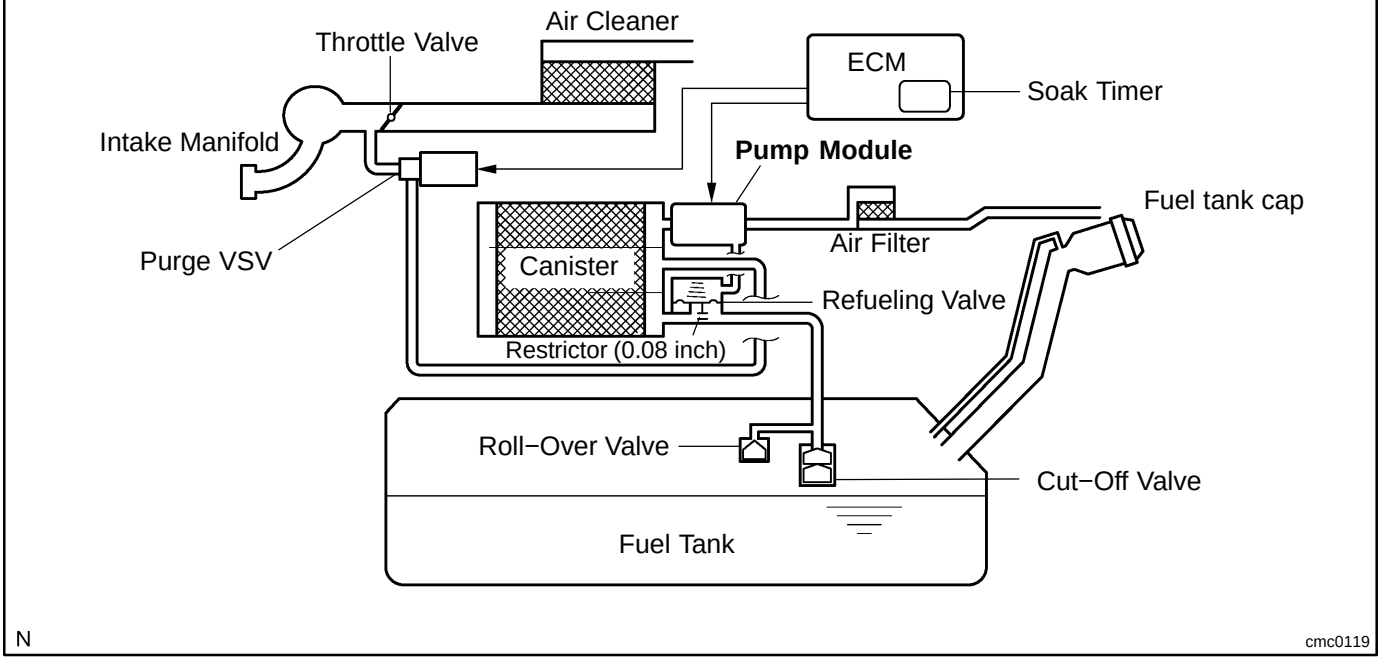

While the engine is running, if a predetermined condition (closed−loop, etc.) is met, the purge VSV is opened by the ECM and stored fuel vapors in the canister are purged to the intake manifold. The ECM changes the duty cycle ratio of the purge VSV to control purge flow volume.
The purge flow volume is also determined by the intake manifold pressure. Atmospheric pressure is allowed into the canister through the vent valve to ensure that the purge flow is maintained when the negative pressure (vacuum) is applied to the canister.
The following two monitors run to confirm appropriate EVAP system operation.

Key−off monitor

This monitor checks for EVAP (Evaporative Emission) system leaks and pump module malfunctions. The monitor starts 5 hours*after the ignition switch is turned OFF. More than 5 hours are required to allow enough time for the fuel to cool down to stabilize the Fuel Tank Pressure (FTP), thus making the EVAP system monitor more accurate.

The electric vacuum pump creates negative pressure (vacuum) in the EVAP system and the pressure is measured. Finally, the ECM monitors for leaks from the EVAP system, and malfunctions in both the pump module and purge VSV, based on the EVAP pressure.

HINT:

*:If the engine coolant temperature is not below 35°C 5 hours after the ignition switch is turned off, the monitor check starts 2 hours later. If it is still not below 35°C 7 hours after the ignition switch is turned off, the monitor check starts 2.5 hours later.

Purge flow monitor

The purge flow monitor consists of the two monitors. The 1st monitor is always conducted every time and the 2nd monitor is activated if necessary.

- The 1st monitor
  While the engine is running and the purge VSV (Vacuum Switching Valve) is ON (open), the ECM monitors the purge flow by measuring the EVAP pressure change. If negative pressure is not created, the ECM begins the 2nd monitor.
- The 2nd monitor
  The vent valve is turned ON (closed) and the EVAP pressure is then measured. If the variation in the pressure is less than 0.5 kpa (3.75 mmHg), the ECM interprets this as the purge VSV being stuck closed, and illuminates the MIL and sets DTC P0441 (2 trip detection logic).

Atmospheric pressure check:

In order to ensure reliable malfunction detection, the variation between the atmospheric pressures, before and after conduction of the purge flow monitor, is measured by the ECM.

EVAP Purge Flow:

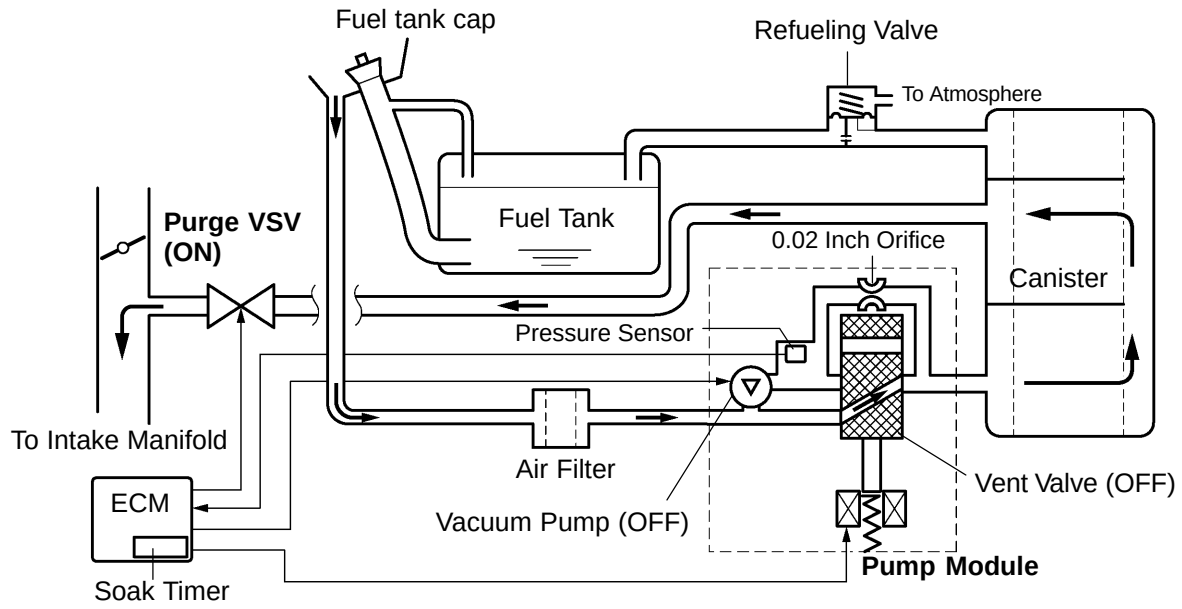

N

cmc0120

Components	Operations
Canister	Contains activated charcoal to absorb EVAP (Evaporative Emissions) generated in fuel tank.
Cut−off valve	Located in fuel tank. Valve floats and closes when fuel tank is 100 % full.
Purge VSV (Vacuum Switching Valve)	Opens or closes line between canister and intake manifold. ECM uses purge VSV to control EVAP purge flow. In order to discharge EVAP absorbed by canister to intake manifold, ECM opens purge VSV. EVAP discharge volume to intake manifold controlled by purge VSV duty cycle ratio (current−carrying time). (Open: ON, Close: OFF)
Refueling valve	Controls EVAP pressure from fuel tank to canister. Valve consists of diaphragm, spring and restrictor (diameter: 0.08 inch). When fuel vapor and pressure inside fuel tank increase, valve opens. While EVAP purged, valve closes and restrictor prevents large amount of vacuum from affecting pressure in fuel tank. Valve opened while refueling. When valve open, adding fuel into fuel tank possible.
Roll−over valve	Located in fuel tank. Valve closes by its own weight when vehicle overturns to prevent fuel from spilling out.
Service port	Used for connecting vacuum gauge for inspecting EVAP system.
Soak timer	Built into ECM. To ensure accurate EVAP monitor, measures 5 hours* after ignition switch turned to OFF. This allows fuel to cool down, stabilizing Fuel Tank Pressure (FTP). When approx. 5 hours* elapsed, ECM activates.
Pump module	Consists of (a) to (d) below. Pump module cannot be disassembled.
(a) Vent valve	Vents and closes EVAP system. When ECM turns valve ON, EVAP system closed. When, ECM turns valve OFF, EVAP system vented. Negative pressure (vacuum) created in EVAP system to check for EVAP leaks by closing purge VSV, turning on vent valve (closed) and operating vacuum pump (refer to fig. 1).
(b) Pressure sensor	Indicates pressure as voltages. ECM supplies regulated 5 V to pressure sensor, and uses feedback from sensor to monitor EVAP system pressure (refer to fig 2).
(c) Vacuum pump	Creates negative pressure (vacuum) in EVAP system for leak check.
(d) 0.02 inch orifice	Has opening with 0.02 inch diameter. Vacuum produced through orifice by closing purge VSV, turning off vent valve and operating vacuum pump, to monitor 0.02 inch leak pressure. 0.02 inch leak pressure indicates small leak of EVAP.

HINT:

*:If the engine coolant temperature is not below 35°C after 5 hours after the ignition switch is turned off, the monitor check starts 2 hours later. If it is still not below 35°C 7 hours after the ignition switch is turned off, the monitor check starts 2.5 hours later.

Pump Module (fig. 1):

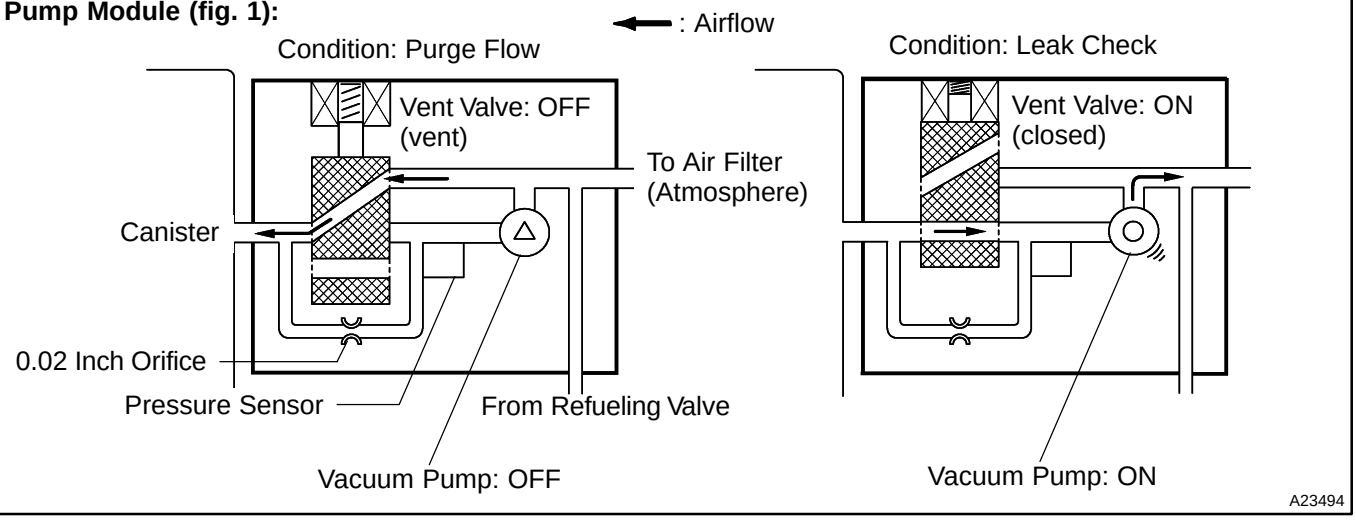

Pressure Sensor Specification (fig. 2)

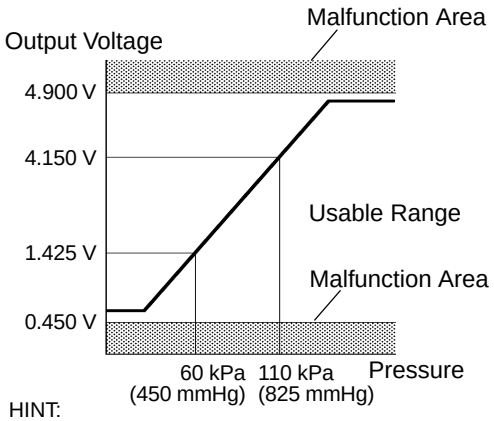

HINT:
Standard atmospheric pressure is
101.3 kPa (760 mmHg)

Soak Timer Circuit (fig. 3)

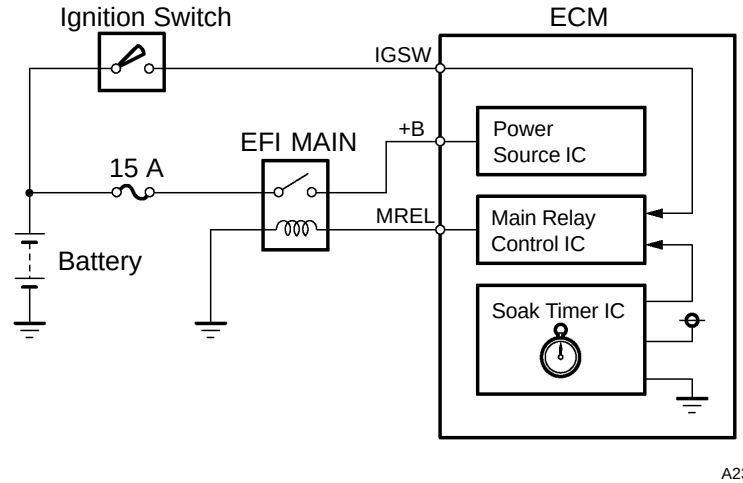

WIRING DIAGRAM

Access Cab, Standard Cab:

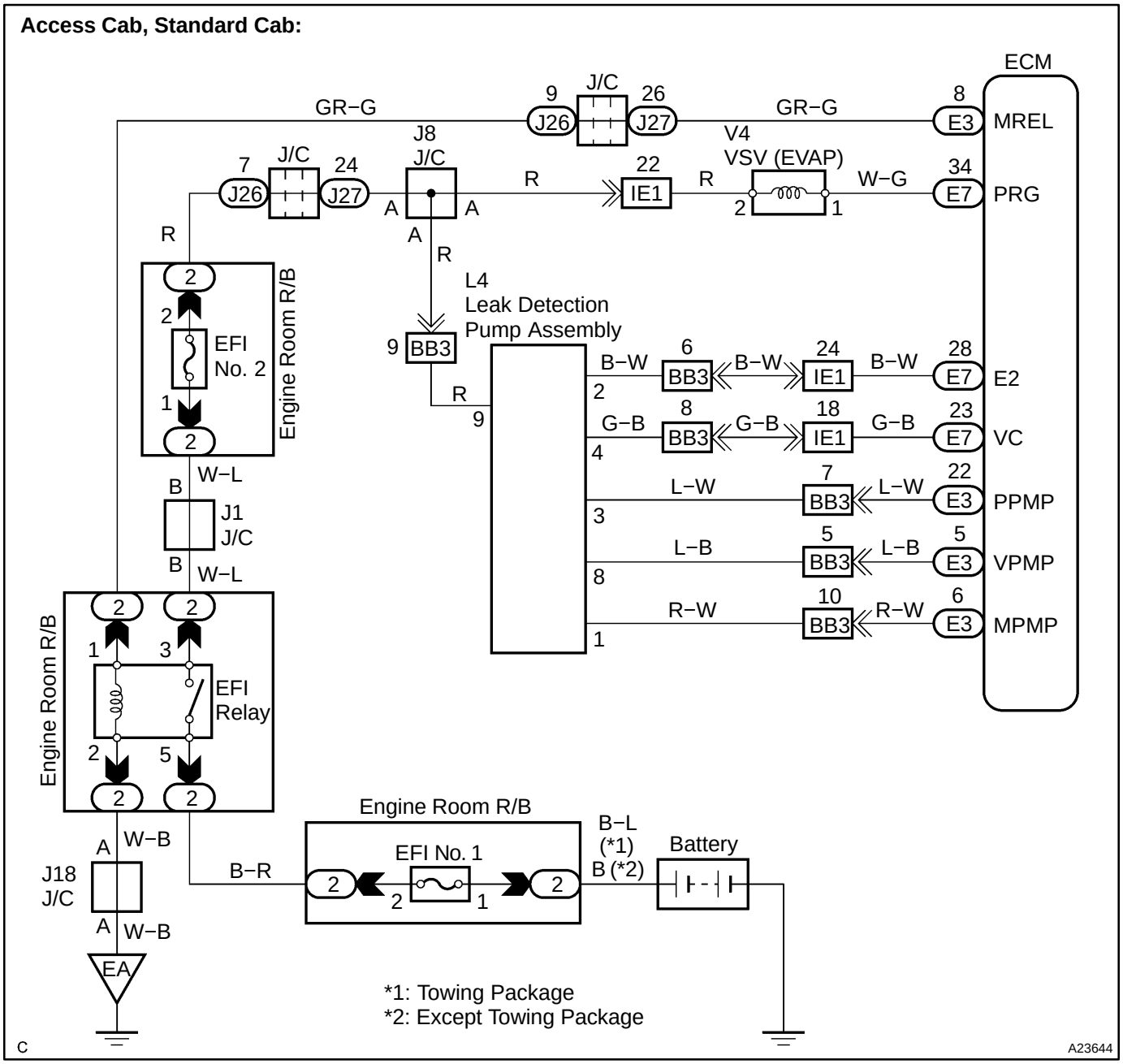

Double Cab:

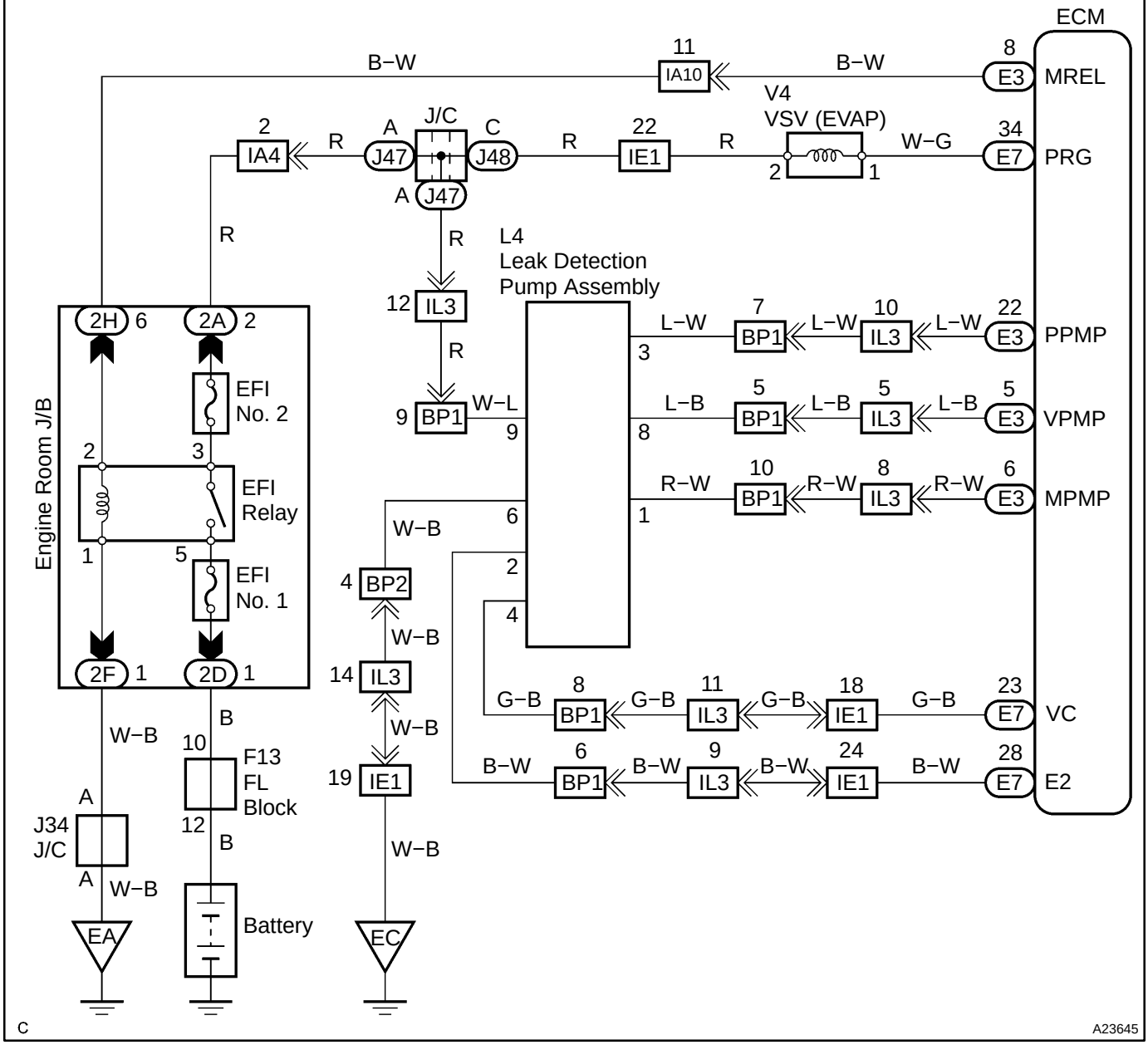
ECM
B−W
11
IA10
B−W
8
E3
MREL
V4
VSV (EVAP)
2
IA4
R
A
J47
J/C
C
J48
R
22
IE1
R
2
1
W−G
34
E7
PRG
A
J47
R
R
L4
Leak Detection
Pump Assembly
12
IL3
R
2H
6
2A
2
EFI
No. 2
2
3
EFI
Relay
1
5
EFI
No. 1
2F
1
2D
1
Engine Room J/B
9
BP1
W−L
9
L−W
7
BP1
L−W
10
IL3
L−W
22
E3
PPMP
3
L−B
5
BP1
L−B
5
IL3
L−B
5
E3
VPMP
8
R−W
10
BP1
R−W
8
IL3
R−W
6
E3
MPMP
1
W−B
6
4
BP2
2
4
W−B
14
IL3
W−B
19
IE1
W−B
G−B
8
BP1
G−B
11
IL3
G−B
18
IE1
G−B
23
E7
VC
B−W
6
BP1
B−W
9
IL3
B−W
24
IE1
B−W
28
E7
E2
W−B
B
10
F13
FL
Block
12
B
A
J34
J/C
A
W−B
EA
Battery
EC
C
A23645

INSPECTION PROCEDURE

NOTICE:

A hand−held tester is required to conduct the following diagnostic troubleshooting procedure.

HINT:

- Using hand−held tester monitor results enables the EVAP (Evaporative Emission) system to be confirmed.
- Read freeze frame data using a hand−held tester Freeze frame data record the engine condition when malfunctions are detected. When troubleshooting, freeze frame data can help determine if the vehicle was moving or stationary, if the engine was warmed up or not, if the air−fuel ratio was lean or rich, and other data, from the time the malfunction occurred.

1	**Confirm DTC.**

(a) Turn the ignition switch to OFF and wait for 10 seconds.
(b) Turn the ignition switch to ON.
(c) Turn the ignition switch to OFF and wait for 10 seconds.
(d) Connect a hand−held tester to the DLC3.
(e) Turn the ignition switch to ON and turn the tester ON.
(f) Select the following menu items: DIAGNOSIS / ENHANCED OBD II / DTC INFO / CURRENT CODES.
(g) Confirm DTCs and freeze frame data.

If any EVAP system DTCs are set, the malfunctioning area can be determined using the table below.

DTCs / Malfunctioning Areas	P043E P043F	P0441	P0450	P0451	P0452	P0453	P0455	P0456	P2401 P2402	P2419	P2420
0.02 inch orifice clogged	●								●	●	
0.02 inch orifice high−flow	●								●	●	
Purge VSV stuck open		●					●				
Purge VSV stuck closed		●									
Pressure sensor signal becomes fixed/flat				●							
Pressure sensor noise				●							
Pressure sensor voltage low			●		●						
Pressure sensor voltage high			●			●					
Gross leak		●					●				
Small leak								●			
Vacuum pump stuck OFF	●								●	●	
Vacuum pump stuck ON	●								●	●	
Vent valve stuck ON (closed)	●								●	●	
Vent valve stuck OFF (vent)											●

NOTICE:

If the 0.02 inch reference pressure difference between the first and second checks is greater than the specification, the DTCs corresponding to the reference pressure (P043E, P043F, P0441, P0455, P0456, P2401, P2420) will be all stored.

NEXT

2	**Perform EVAP system check.**

NOTICE:

- **In the EVAP SYSTEM CHECK (AUTO OPERATION), the series of 5 EVAP SYSTEM CHECK steps is performed automatically by the hand−held tester. It takes a maximum of approximately 18 minutes.**
- **Do not perform the EVAP SYSTEM CHECK when the fuel tank is more than 90% full because the cut−off valve may be closed and making the leak check of the fuel tank unavailable.**
- **Do not run the engine in this step.**
- **When the temperature of the fuel is 35°C (95°F) or more, a large amount of vapor forms and any check results become inaccurate. When performing the EVAP SYSTEM CHECK, keep the temperature below 35°C (95°F).**

(a) Clear DTCs (see page DI−462).

(b) On the hand−held tester, select the following menu items: DIAGNOSIS / ENHANCED OBD II / SYSTEM CHECK / EVAP SYS CHECK / AUTO OPERATION.

(c) After the EVAP SYSTEM CHECK is completed, check for pending DTCs by selecting the following menu items: DIAGNOSIS / ENHANCED OBD II / DTC INFO / PENDING CODES.

HINT:

If no pending DTC is displayed, perform the Monitor Confirmation after this repair is completed. After this confirmation, check for pending DTCs. If no DTC is displayed, the EVAP system is normal.

NEXT

3	**Perform EVAP system manual operation check.**

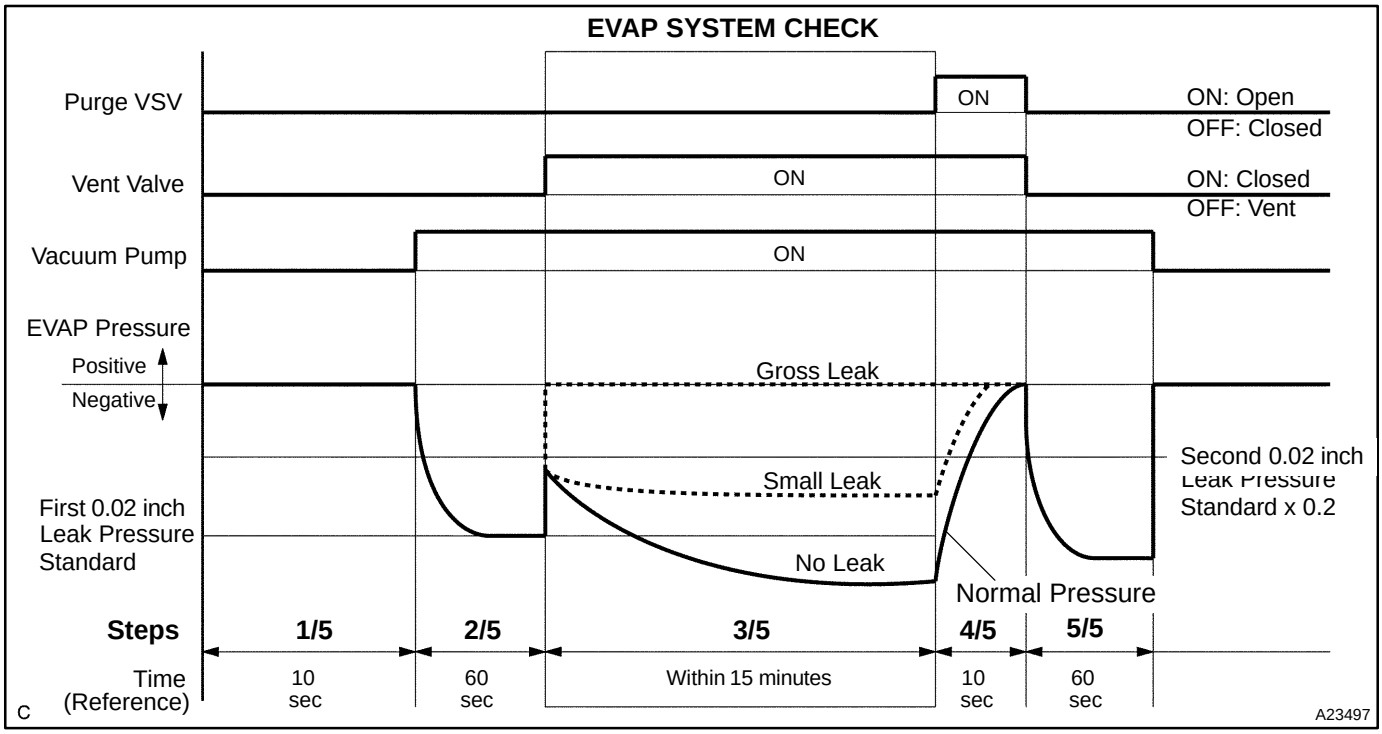

NOTICE:

- **In the EVAP SYSTEM CHECK (MANUAL OPERATION), the series of 5 EVAP SYSTEM CHECK steps is performed manually by the hand−held tester.**
- **Do not perform the EVAP SYSTEM CHECK when the fuel tank is more than 90% full because the cut−off valve may be closed and making the leak check of the fuel tank unavailable.**
- **Do not run the engine in this step.**
- **When the temperature of the fuel is 35°C (95°F) or more, a large amount of vapor forms and any check results become inaccurate. When performing the EVAP SYSTEM CHECK, keep the temperature below 35°C (95°F).**

(a) Clear DTCs (see page DI−462).

(b) On the hand−held tester, select the following menu items: DIAGNOSIS / ENHANCED OBD II / SYSTEM CHECK / EVAP SYS CHECK / MANUAL OPERATION.

NEXT

4	**Perform EVAP system step 1/5 check.**

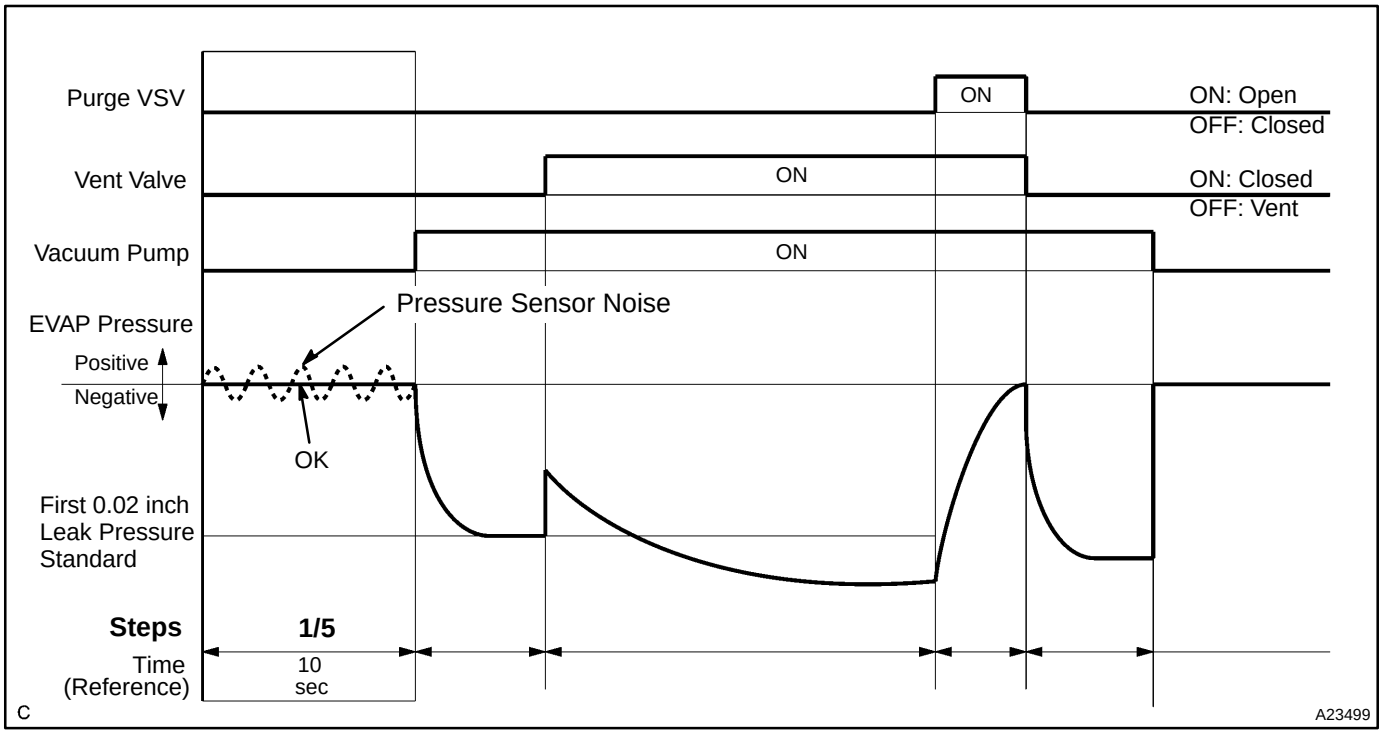

(a) Check the EVAP pressure in step 1/5.

Result:

DTCs*	Test Results	Suspected Trouble Areas	Proceed To
—	Virtually no variation in EVAP pressure	Not yet determined	A
P0451	EVAP pressure fluctuates by ±0.3 kPa (2.25 mmHg) or more	Pressure sensor noising	B

*: The DTCs relating to the EVAP system displayed on a hand−held tester when checking.

B → **Go to step 30**

A

5	**Perform EVAP system step 1/5 to 2/5 check.**

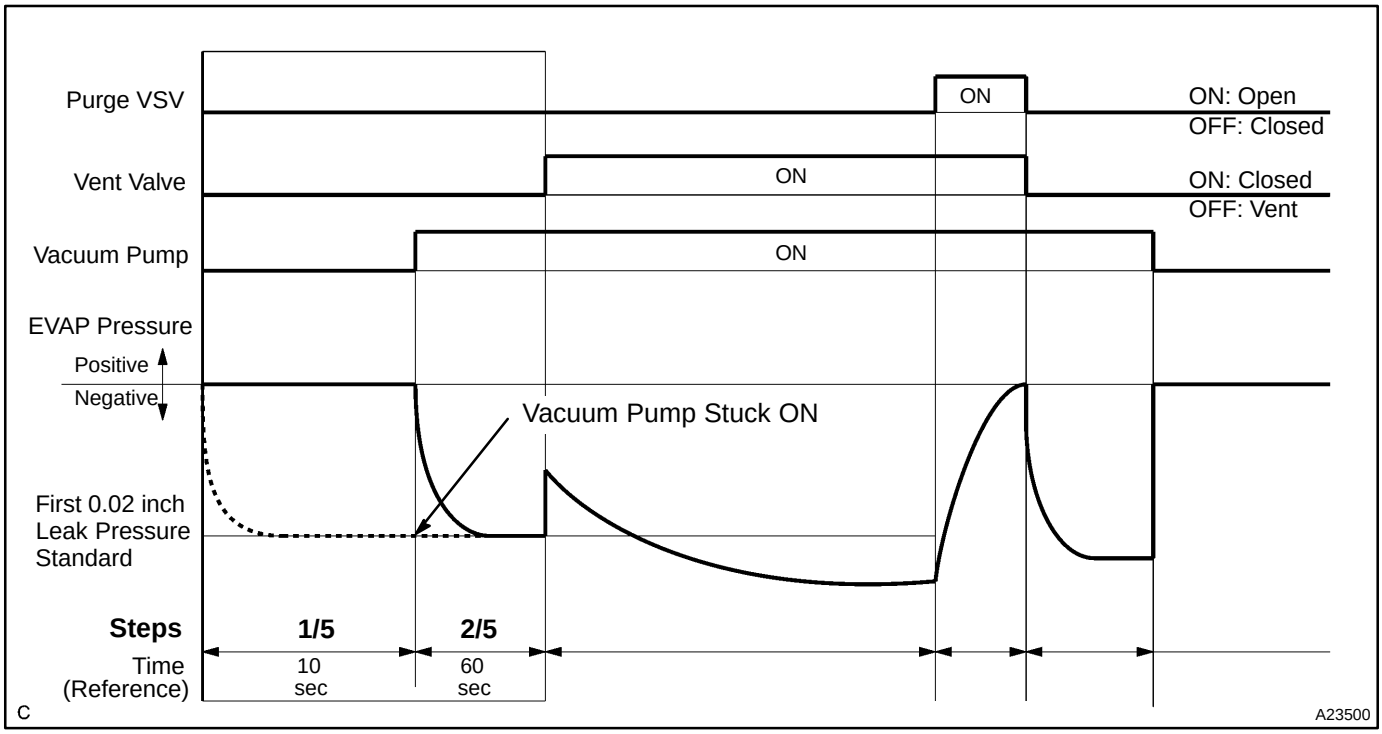

(a) Check the EVAP pressure in step 1/5 and 2/5.

Result:

DTCs*	Test Results	Suspected Trouble Areas	Proceed To
—	Virtually no variation in EVAP pressure during step 1/5. Then decreases to 0.02 inch leak pressure standard*	Not yet determined	A
P2402	Small difference between EVAP pressures during steps 1/5 and 2/5	Vacuum pump stuck ON	B

*: The DTCs relating to the EVAP system displayed on a hand−held tester when checking.

HINT:

The 0.02 inch leak pressure standard is the value determined in step 2/5.

B	**Go to step 23.**

A

6	**Perform EVAP system step 2/5 check.**

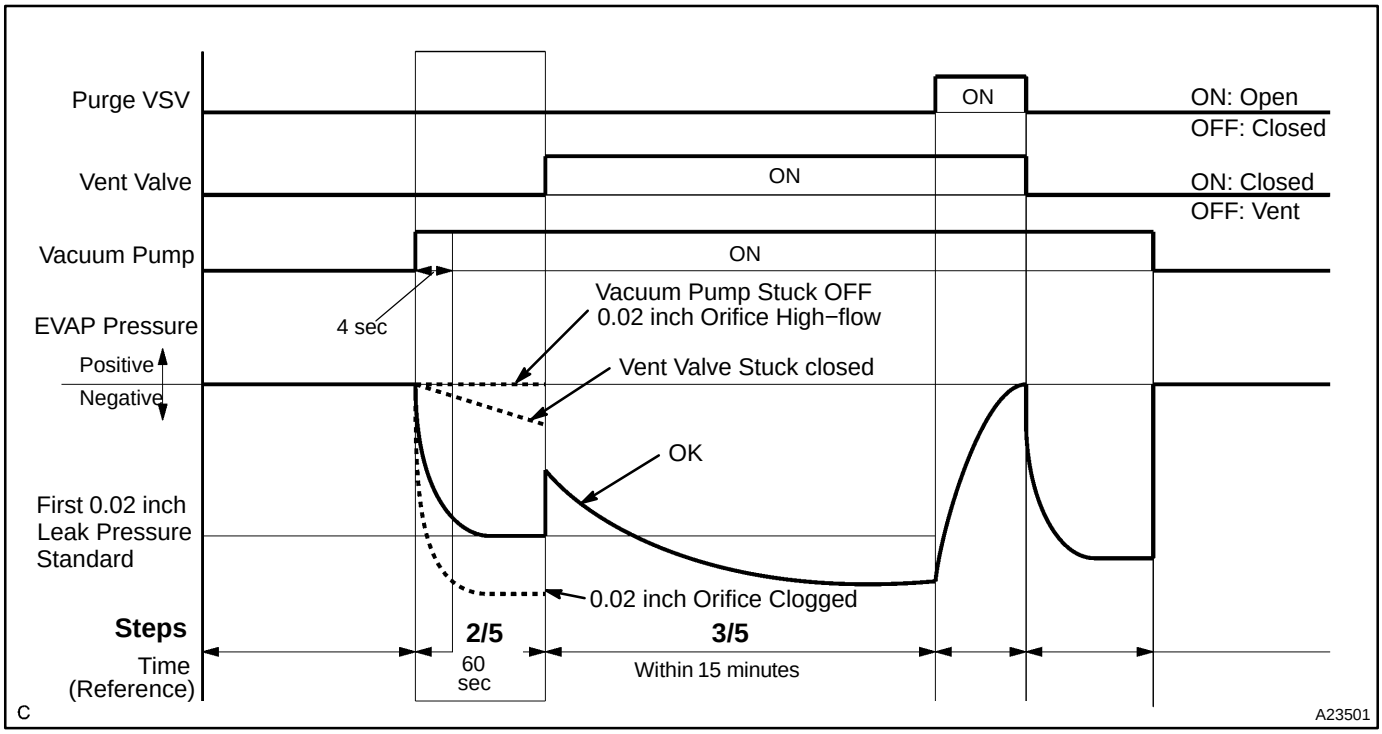

HINT:

Make a note of the pressures checked in steps (a) and (b) below.

(a) Check the EVAP pressure 4 seconds after the vacuum pump is activated*.

(b) Check the EVAP pressure again when it has stabilized. This pressure is the 0.02 inch leak pressure standard.

*: The vacuum pump begins to operate as step 1/5 is proceeded to step 2/5.

Result:

DTCs*	Test Results	Suspected Trouble Areas	Proceed To
—	EVAP pressure in step (b) between −4.85 kPa and −1.06 kPa (−36.38 mmHg and −7.95 mmHg)	Not yet determined	A
P043F and P2401	EVAP pressure in step (b) −1.06 kPa (−7.95 mmHg) or more	• 0.02 inch orifice high−flow • Vacuum pump stuck OFF	B
P043E	EVAP pressure in step (b) below −4.85 kPa (−36.38 mmHg)	0.02 inch orifice clogged	C
P2419	EVAP pressure in step (a) more than −1.06 kPa (−7.95 mmHg)	Vent valve stuck closed	D

*: The DTCs relating to the EVAP system displayed on a hand−held tester when checking.

B	**Go to step 11**
C	**Go to step 30**
D	**Go to step 19**

A

7	**Perform EVAP system step 2/5 to 3/5 check.**

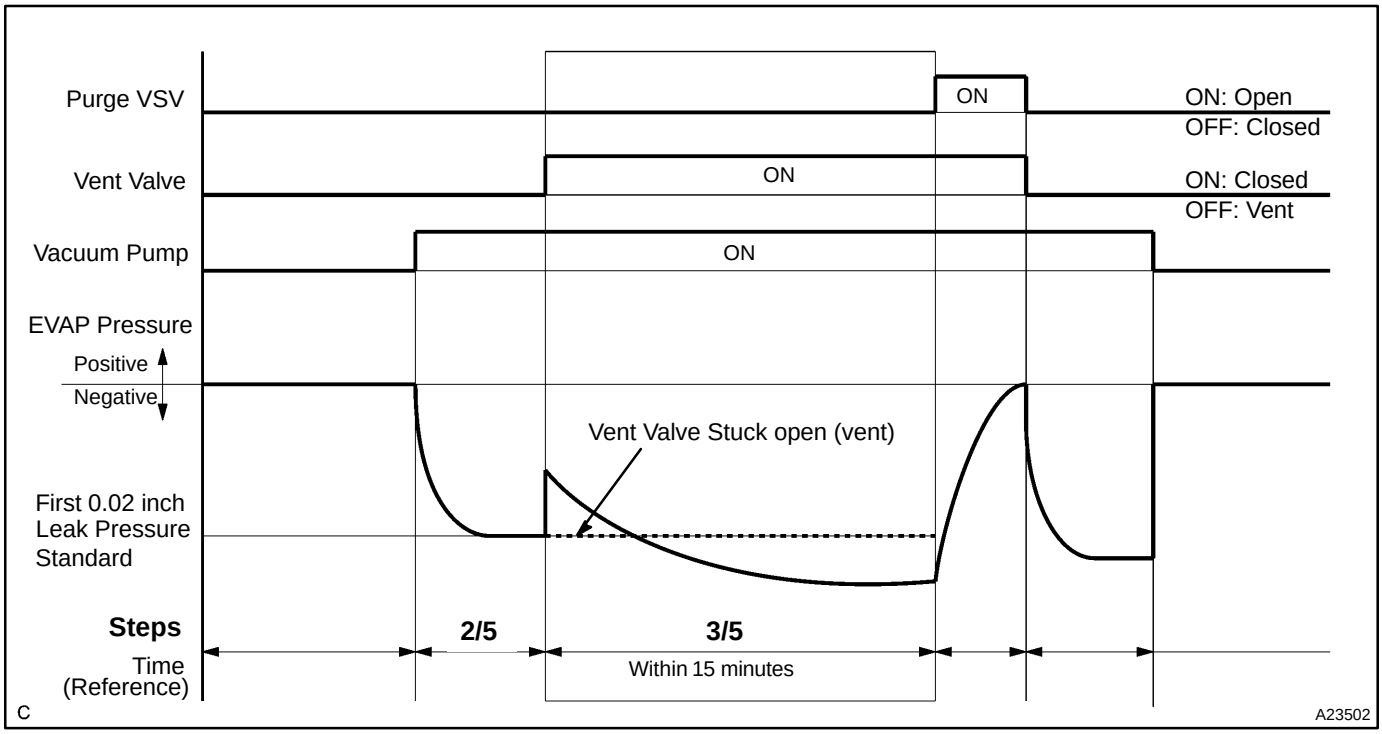

(a) Check the EVAP pressure increase in step 3/5.

Result:

DTCs*	Test Results	Suspected Trouble Areas	Proceed To
—	EVAP pressure increases by 0.3 kPa (2.25 mmHg) or more within 10 seconds of proceeding from step 2/5 to step 3/5	Not yet determined	A
P2420	No variation in EVAP pressure despite proceeding from step 2/5 to step 3/5	Vent valve stuck open (vent)	B
P0451	No variation in EVAP pressure during steps 1/5 through 3/5	Pressure sensor malfunction stuck	C

*: The DTCs relating to the EVAP system displayed on a hand−held tester when checking.

B	**Go to step 19.**
C	**Go to step 30.**

A

8	**Perform EVAP system step 3/5 check.**

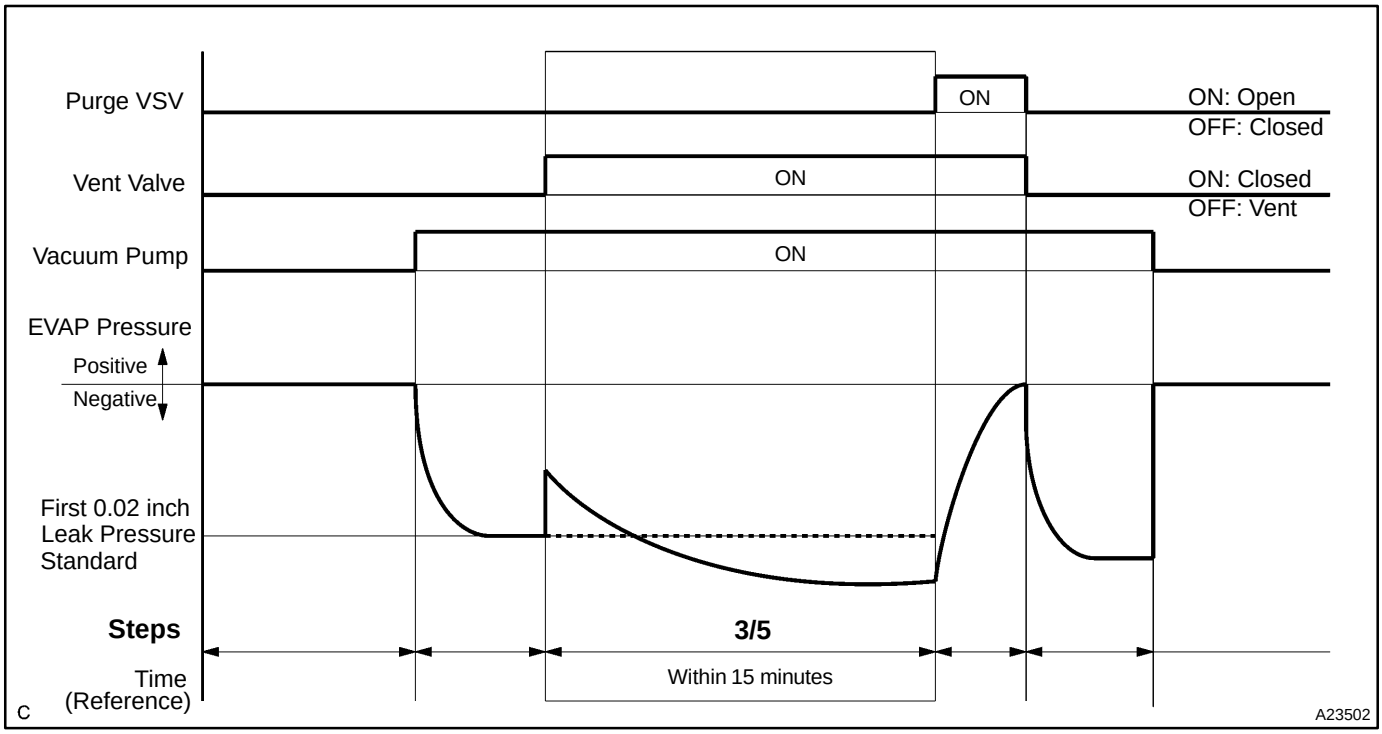

(a) Wait until the EVAP pressure change is less than 0.1 kPa (0.75 mmHg) for 30 seconds.
(b) Measure the EVAP pressure and record it.

HINT:

A few minutes are required for the EVAP pressure to become saturated. When there is little fuel in the fuel tank, it takes up to 12 minutes.

NEXT

9	**Perform EVAP system step 4/5 check.**

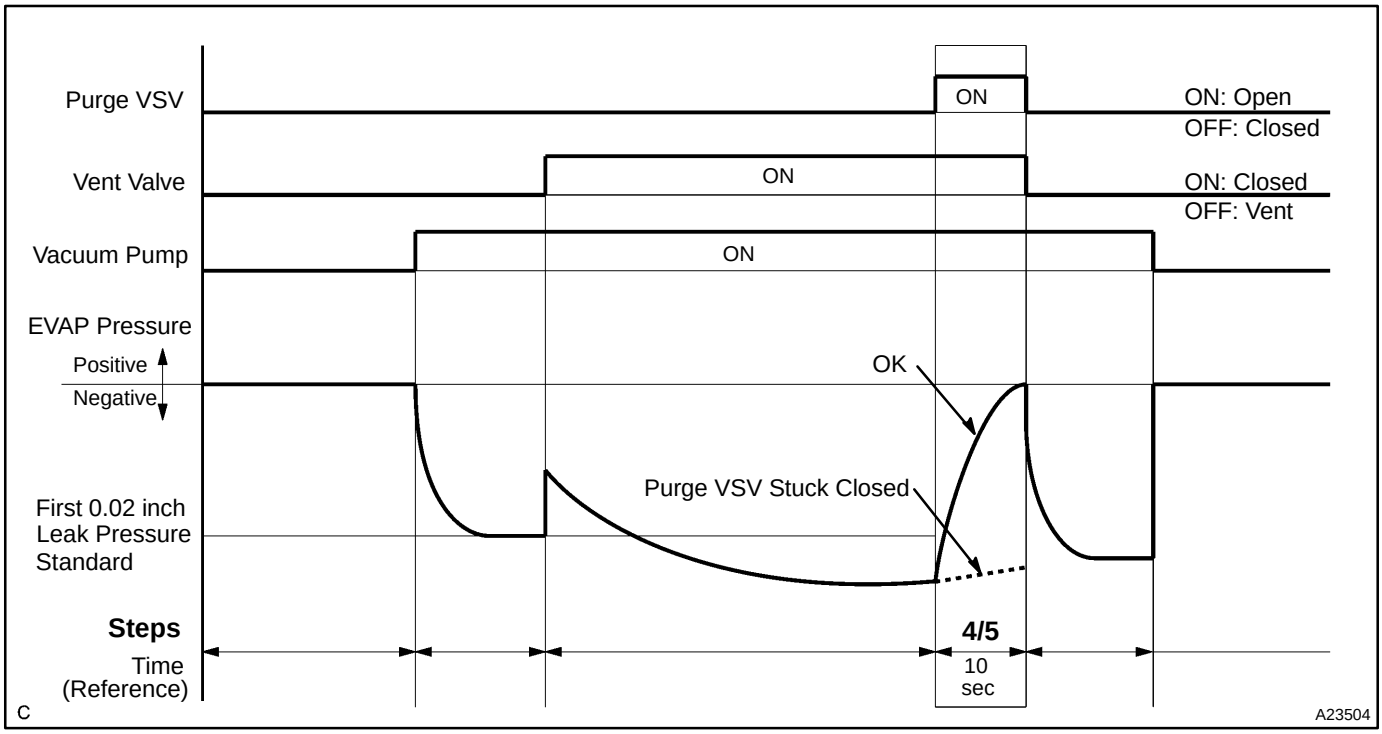

(a) Check the EVAP pressure in step 4/5.

DTCs*	Test Results	Suspected Trouble Areas	Proceed To
—	EVAP pressure increases by 0.3 kPa (2.25 mmHg) or more within 10 seconds of proceeding from step 3/5 to step 4/5	Not yet determined	A
P0441	EVAP pressure increases by 0.3 kPa (2.25 mmHg) or more within 10 seconds of proceeding from step 3/5 to step 4/5	Problems in EVAP hose between pure VSV and throttle body	B
P0441	Variation in EVAP pressure is less than 0.3 kPa (2.25 mmHg) for 10 seconds, after proceeding from step 3/5 to step 4/5	Purge VSV stuck closed	C

*: The DTCs relating to the EVAP system displayed on a hand−held tester when checking.

B	**Go to step 15.**
C	**Go to step 12.**

A

10	**Perform EVAP system step 5/5 check.**

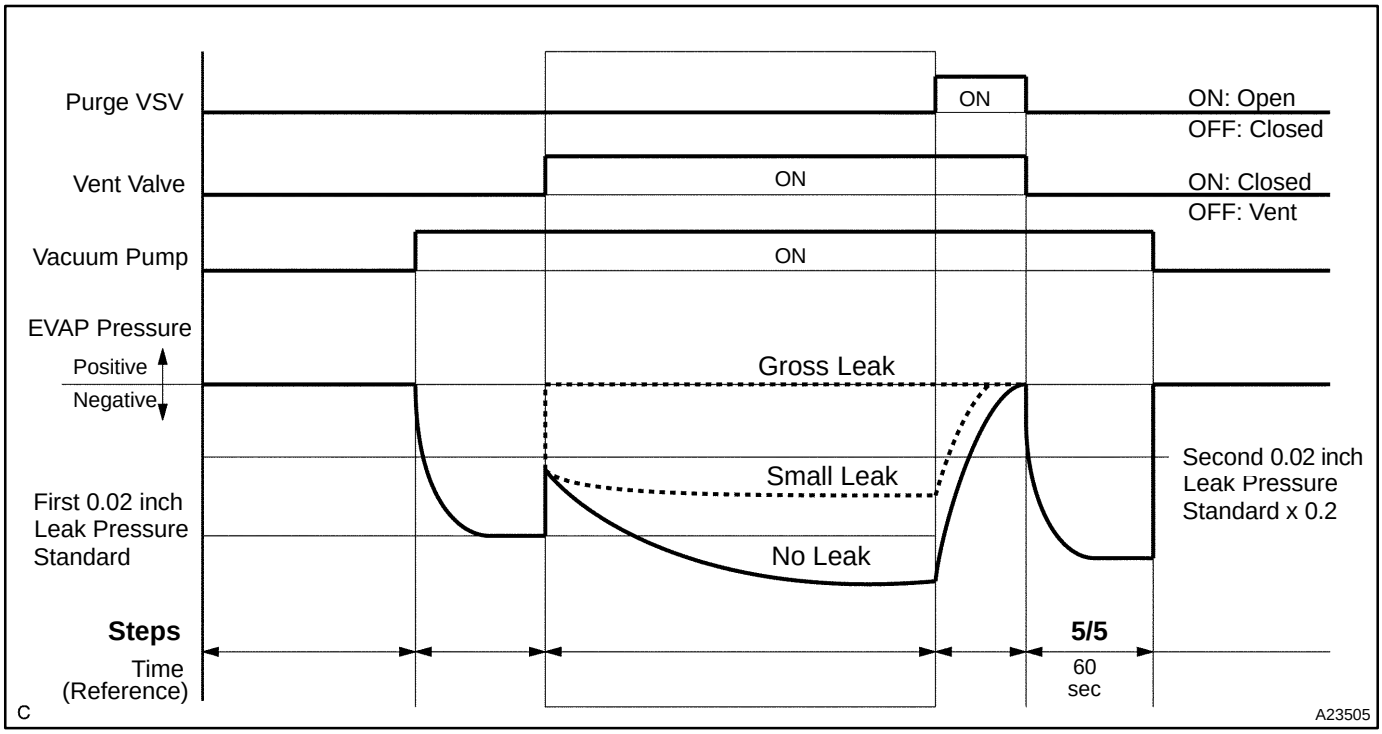

(a) Check the EVAP pressure in step 5/5.

(b) Compare the EVAP pressure in step 3/5 and the second 0.02 inch leak pressure standard (step 5/5).

Result:

DTCs*	Test Results	Suspected Trouble Areas	Proceed To
—	EVAP pressure (step 3/5) lower than the second 0.02 inch leak pressure standard (step 5/5)	Not yet determined (no leakage from EVAP system)	A
P0441 and P0455	EVAP pressure (step 3/5) higher than [second 0.02 inch leak pressure standard (step 5/5) x 0.2]	• Purge VSV stuck open • EVAP gross leak	B
P0456	EVAP pressure (step 3/5) higher than second 0.02 inch leak pressure standard (step 5/5)	EVAP small leak	B

*: The DTCs relating to the EVAP system displayed on a hand−held tester when checking.

A	**Go to step 36.**
B	**Go to step 12.**

11	**Perform EVAP system step 3/5 check.**

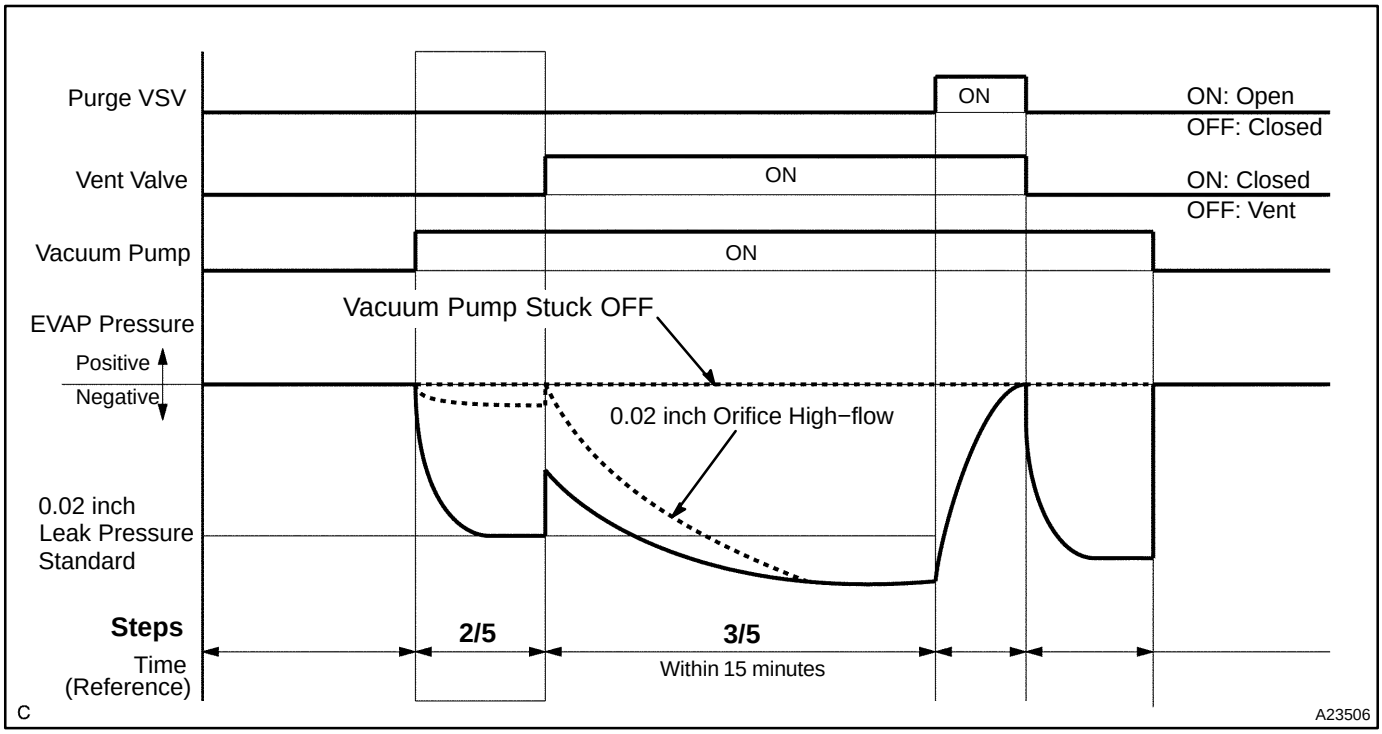

(a) Check the EVAP pressure in step 3/5.

Result:

DTCs*	Test Results	Suspected Trouble Areas	Proceed To
—	EVAP pressure less than [0.02 inch leak pressure standard x 0.2]	0.02 inch orifice high−flow	A
—	EVAP pressure more than [0.02 inch leak pressure standard x 0.2]	Vacuum pump stuck OFF	B

*: The DTCs relating to the EVAP system displayed on a hand−held tester when checking.

HINT:

The 0.02 inch leak pressure standard is the value determined in step 2/5.

A	**Go to step 30.**
B	**Go to step 23.**

12	Perform active test of purge VSV.

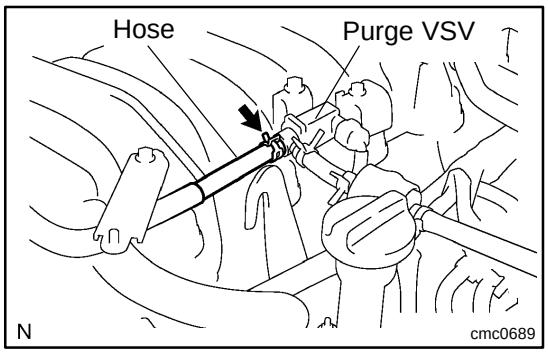

PREPARATION:

(a) On the hand−held tester, select the following menu items: DIAGNOSIS / ENHANCED OBD II/ ACTIVE TEST / EVAP VSV.
(b) Disconnect the hose (connected to the canister) from the purge VSV.
(c) Start the engine.

CHECK:

(a) On the tester, turn off the purge VSV (EVAP VSV: OFF).
(b) Use your finger to confirm that the purge VSV has no suction.
(c) Using the tester, turn on the purge VSV (EVAP VSV: ON).
(d) Use your finger to confirm that the purge VSV has suction.

RESULT:

Test Results	Suspected Trouble Areas	Proceed To
No suction when purge VSV turned OFF, and suction applied when tuned ON	Purge VSV normal	A
Suction applied when purge VSV turned OFF	Purge VSV stuck open	B
No suction when purge VSV turned ON	• Purge VSV stuck closed • Problems with EVAP hose between purge VSV and throttle body	C

B → **Go to step 14.**

C → **Go to step 15.**

A

13	Check fuel tank cap.

CHECK:

(a) Check that the fuel tank cap is correctly installed and confirm the fuel tank cap meets OEM specification.

HINT:

If an EVAP tester is available, check the fuel tank cap using the tester.

(1) Tighten the fuel tank cap.
(2) Remove the fuel tank cap and install it onto a fuel tank cap adaptor.
(3) Connect an EVAP tester pump hose to the adaptor, and pressurize to 3.2 to 3.7 kPa (24 to 28 mmHg) using an EVAP tester pump.
(4) Seal the adaptor and wait for 2 minutes.
(5) Check the pressure. If the pressure is 2 kPa (15 mmHg) or more, the fuel tank cap is normal.

PREPARATION:

Test Results	Suspected Trouble Areas	Proceed To
Fuel tank cap correctly installed	—	A
Fuel tank cap loose	• Fuel tank cap improperly installed • Defective fuel tank cap • Fuel tank cap does not meet OEM specifications	B
No fuel tank cap	—	C

A	**Go to step 29.**
B	**Go to step 27.**
C	**Go to step 28.**

14	Inspect EVAP VSV.

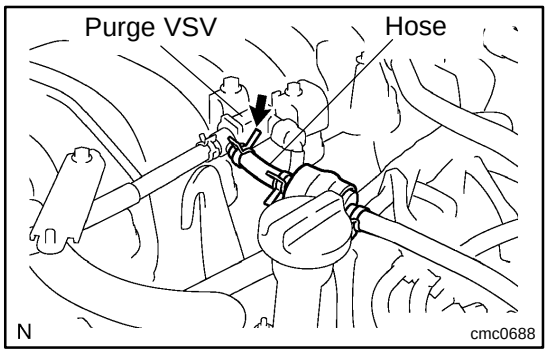

PREPARATION:

(a) Turn the ignition switch to OFF.
(b) Disconnect the V4 purge VSV connector.
(c) Disconnect the hose (connected to the canister) from the purge VSV.
(d) Start the engine.

CHECK:

Use your finger to confirm that the purge VSV has no suction.

RESULT:

Test Results	Suspected Trouble Areas	Proceed To
No suction	ECM	A
Suction applied	Purge VSV	B

A → **Go to step 34.**

B → **Go to step 30.**

15	Check EVAP hose between purge VSV and throttle body.

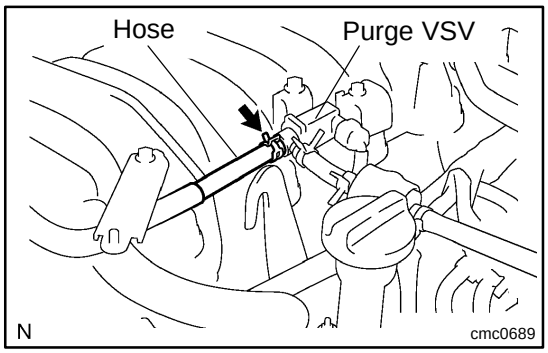

PREPARATION:

(a) Disconnect the hose (connected to the throttle body) from the purge VSV.
(b) Start the engine.

CHECK:

(a) Use your finger to confirm that the hose has suction.

RESULT:

Test Results	Suspected Trouble Areas	Proceed To
Suction applied	EVAP hose between purge VSV and throttle body normal	A
No suction	• Throttle body • EVAP hose between purge VSV and throttle body	B

B → **Go to step 26.**

A

16	Inspect EVAP VSV.

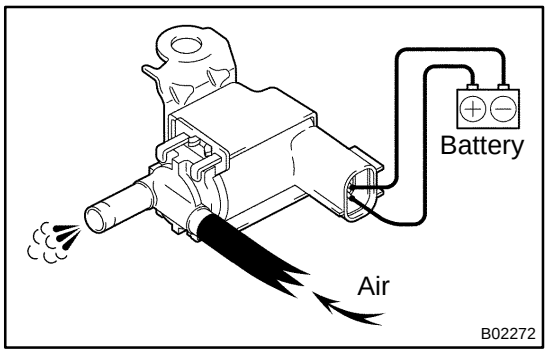

PREPARATION:

(a) Remove the purge VSV.

(b) Apply battery voltage to the terminals of the purge VSV.

CHECK:

Using an air gun, confirm that air flows from port A to port B.

RESULT:

Test Results	Suspected Trouble Areas	Proceed To
Suction applied	EVAP hose between purge VSV and throttle body normal	A
No suction	• Throttle body • EVAP hose between purge VSV and throttle body	B

B → **Go to step 31.**

A

17	Measure purge VSV terminal voltage.

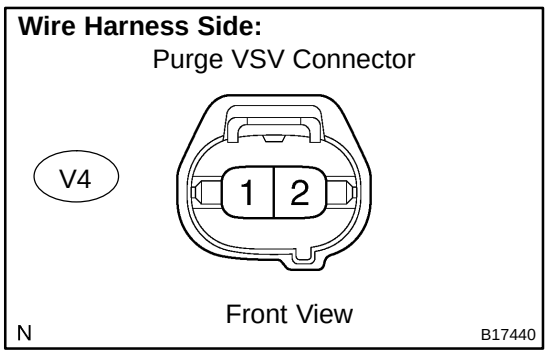

PREPARATION:

(a) Disconnect the V4 purge VSV connector.

(b) Turn the ignition switch to ON.

CHECK:

(a) Measure the voltage between terminal 1 of the purge VSV connector and the body ground.

RESULT:

Test Results	Suspected Trouble Areas	Proceed To
Between 11 V and 14 V	Normal	A
Other than result above	Wire harness or connectors between purge VSV and ECM	B

B → **Go to step 32.**

A

18	Check for open and short circuit in harness and connector between purge VSV and ECM.

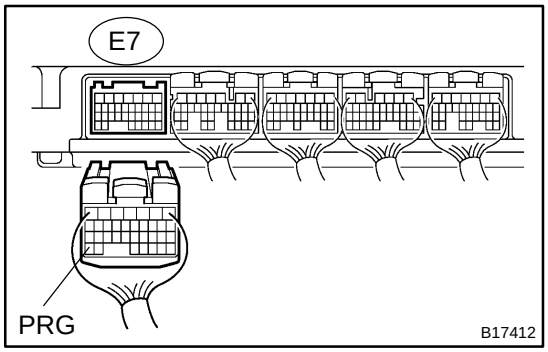

PREPARATION:

Disconnect the E7 ECM connector and the V4 purge VSV connector.

CHECK:

Check the resistance.

OK:

Standard:

Tester Connections	Specified Conditions
E7−34 (PRG) − V4−1	Below 1 Ω
E7−34 (PRG) − Body ground	10 kΩ or higher
V4−1 − Body ground	10 kΩ or higher

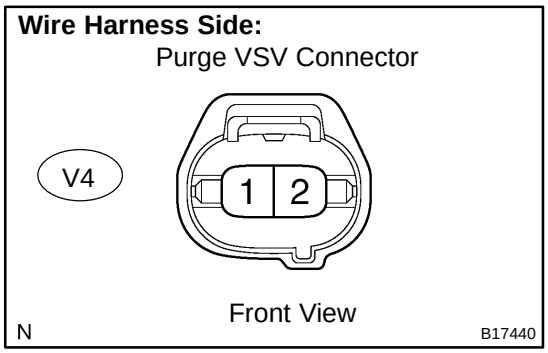

OK	Go to step 35.

NG	Go to step 32.

19	Perform active test for vent valve.

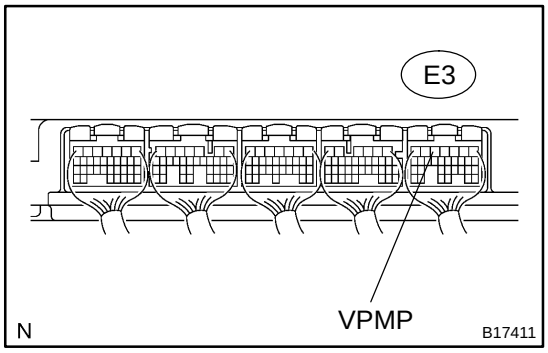

PREPARATION:

(a) Turn the ignition switch to ON.

(b) On the hand−held tester, select the following menu items: DIAGNOSIS/ ENHANCED OBD II/ ACTIVE TEST/ VENT VALVE (ALONE).

CHECK:

Measure the voltage between terminal VPMP of the ECM connector and the body ground when the vent valve is turned ON (close) and OFF (vent) using the tester.

RESULT:

Test Results	Suspected Trouble Areas	Proceed To
Between 9 V and 14 V when OFF Below 3 V when ON	Vent valve	A
Below 3 V when OFF and ON	ECM	B

A	Go to step 22.

B	Go to step 35.

20	Perform active test for vent valve.

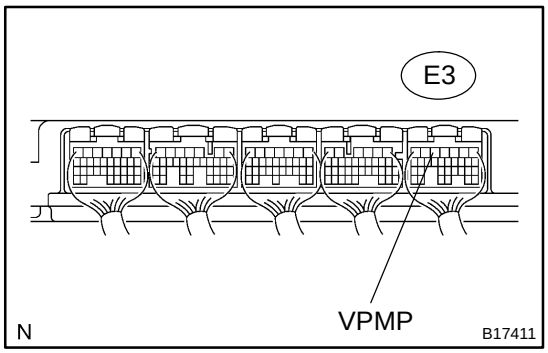

PREPARATION:

(a) Turn the ignition switch to ON.

(b) On the hand−held tester, select the following menu items: DIAGNOSIS/ ENHANCED OBD II/ ACTIVE TEST/ VENT VALVE (ALONE).

CHECK:

Measure the voltage between terminal VPMP of the ECM connector and the body ground when the vent valve is turned ON (close) and OFF (vent) using the tester.

RESULT:

Test Results	Suspected Trouble Areas	Proceed To
Below 3 V when OFF and ON	Power source of vent valve	A
Between 9 V and 14 V when OFF Below 3 V when ON	Vent valve	B
Between 9 V and 14 V when OFF and ON	ECM	C

B → **Go to step 24.**

C → **Go to step 35.**

A

21	Inspect pump module power source circuit.

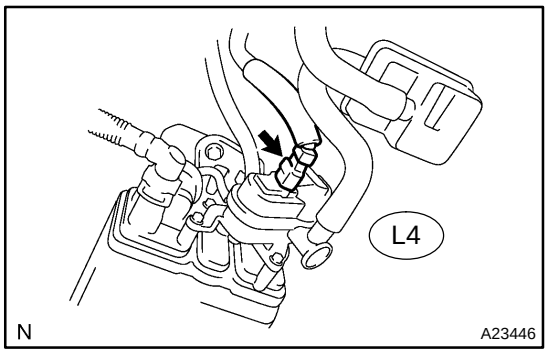

PREPARATION:

(a) Turn the ignition switch to OFF.
(b) Disconnect the L4 canister connector.
(c) Turn the ignition switch to ON.

CHECK:

Measure the voltage between terminal 9 of the canister connector and the body ground.

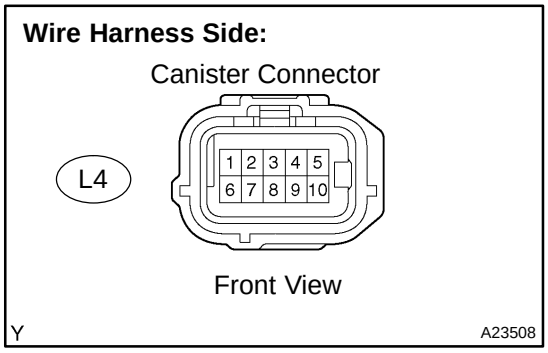

RESULT:

Test Results	Suspected Trouble Areas	Proceed To
Between 9 V and 14 V	Normal	A
Between 0 V and 3 V	Power source wire harness of vent valve	B

B → **Go to step 32.**

A

22	Inspect vent valve operation of pump module.

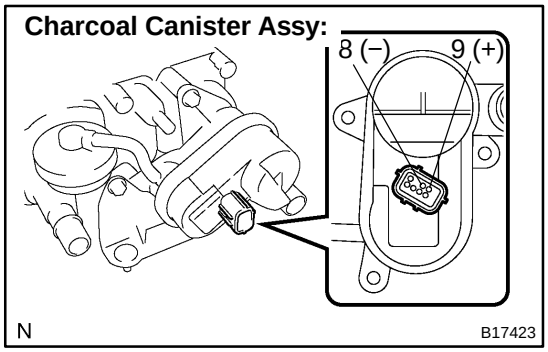

PREPARATION:

(a) Disconnect the L4 canister connector.
(b) Turn the ignition switch to OFF.
(c) Apply the battery voltage to terminals 9 and 8 of the pump module.

CHECK:

Touch the pump module to confirm the vent valve operation.

RESULT:

Test Results	Suspected Trouble Areas	Proceed To
Operating	Wire harness between vent valve and ECM	A
Not operating	Vent valve	B

A	**Go to step 32.**
B	**Go to step 30.**

23	Perform active test for vacuum pump.

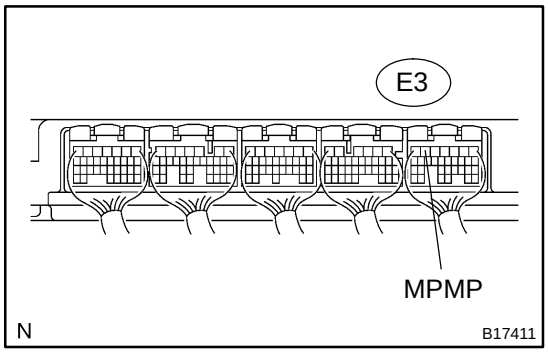

PREPARATION:

On the hand−held tester, select the following menu items: DIAGNOSIS / ENHANCED OBD II / ACTIVE TEST / VACUUM PUMP (ALONE).

CHECK:

Measure the voltage between terminal MPMP of the ECM connector and the body ground when the vacuum pump is turned ON and OFF using the tester.

Result:

Tests Results	Suspected Trouble Areas	Proceed To
Between 0 V and 3 V when OFF Between 9 V and 14 V when ON	ECM normal	A
Between 9 V and 14 V when OFF Between 0 V and 3 V when ON	ECM	B

B	**Go to step 35.**

A

24	Check for open and short circuit in harness and connecter between pump module and ECM.

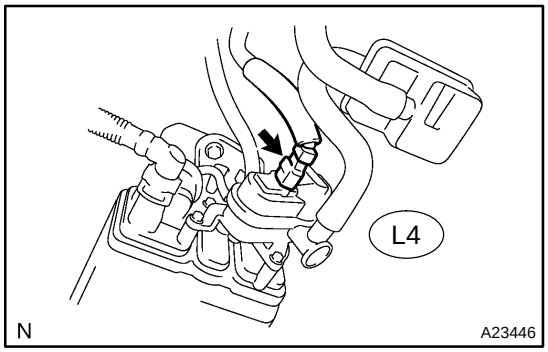

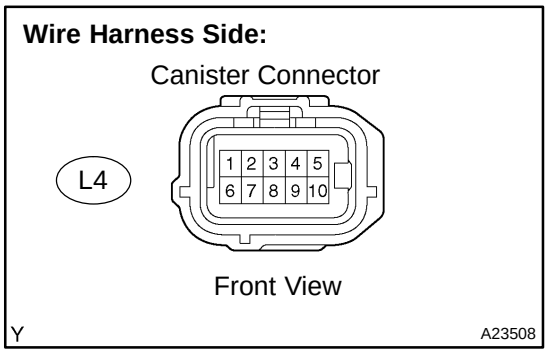

PREPARATION:

(a) Turn the ignition switch to OFF.
(b) Disconnect the L4 canister connector.
(c) Turn the ignition switch to ON.
(d) On the hand−held tester, select the following menu items:DIAGNOSIS / ENHANCED OBD II / ACTIVE TEST / VACUUM PUMP (ALONE).
(e) Turn the vacuum pump ON.

CHECK:

Measure the voltage between terminal 1 of the canister connector and the body ground.

RESULT:

Test Results	Suspected Trouble Areas	Proceed To
Between 9 V and 14 V	Normal	A
Between 0 V and 3 V	Wire harness between ECM and vacuum pump	B

B → **Go to step 32.**

A

25	Check for open and short in harness and connector between pump module and ECM.

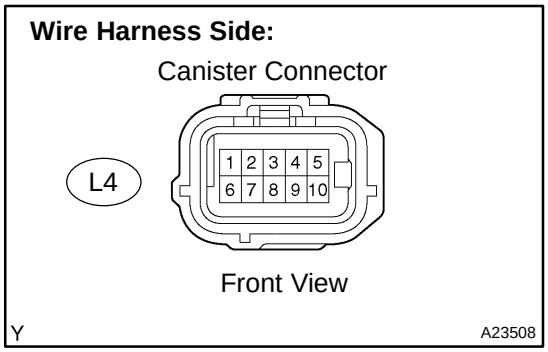

PREPARATION:

(a) Disconnect the L4 canister connector.

(b) Turn the ignition switch to OFF.

CHECK:

Check the resistance between terminal 6 of the canister connector and the body ground.

RESULT:

Test Results	Suspected Trouble Areas	Proceed To
Below 1 Ω	Vacuum pump	A
10 kΩ or more	Wire harness between vacuum pump and body ground	B

A	Go to step 30.
B	Go to step 32.

26	Inspect throttle body.

PREPARATION:

(a) Stop the engine.

(b) Disconnect the EVAP hose from the throttle body.

(c) Start the engine.

CHECK:

(a) Use your finger to confirm that the port of the throttle body has suction.

RESULT:

Test Results	Suspected Trouble Areas	Proceed To
Suction applied	EVAP hose between throttle body and purge VSV	A
No suction	Throttle body	B

A	Go to step 33.
B	Go to step 34.

27	**Correctly reinstall or replace fuel tank cap.**

HINT:

- When reinstalling the fuel tank cap, tighten it until a few click sounds are heard.
- When replacing the fuel tank cap, use a fuel tank cap that meets OEM specifications, and install it until a few click sounds are heard.

NEXT	**Go to step 37.**

28	**Replace fuel tank cap.**

HINT:

When installing the fuel tank cap, tighten it until a few click sounds are heard.

NEXT	**Go to step 37.**

29	**Locate EVAP leak.**

(a) Disconnect the vent hose.

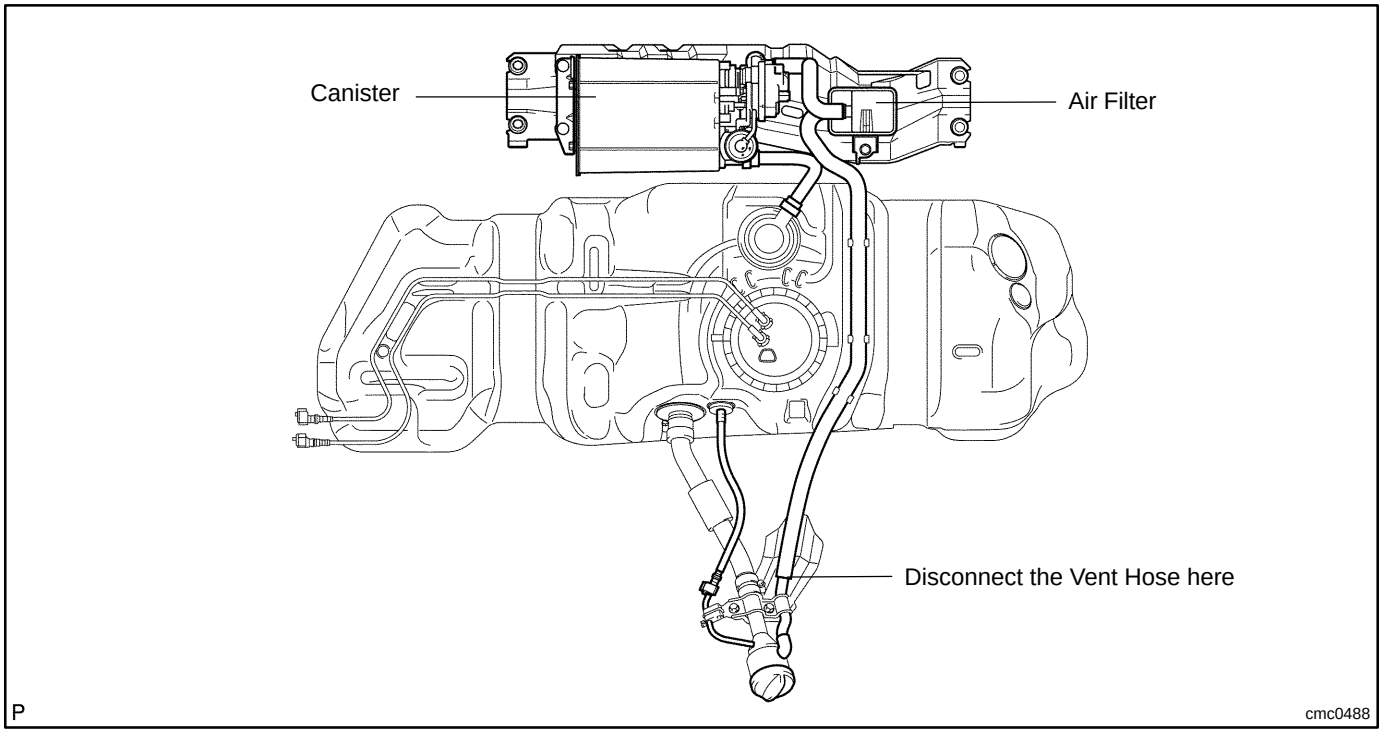

(b) Connect the EVAP pressure tester tool to the canister with the adapter.

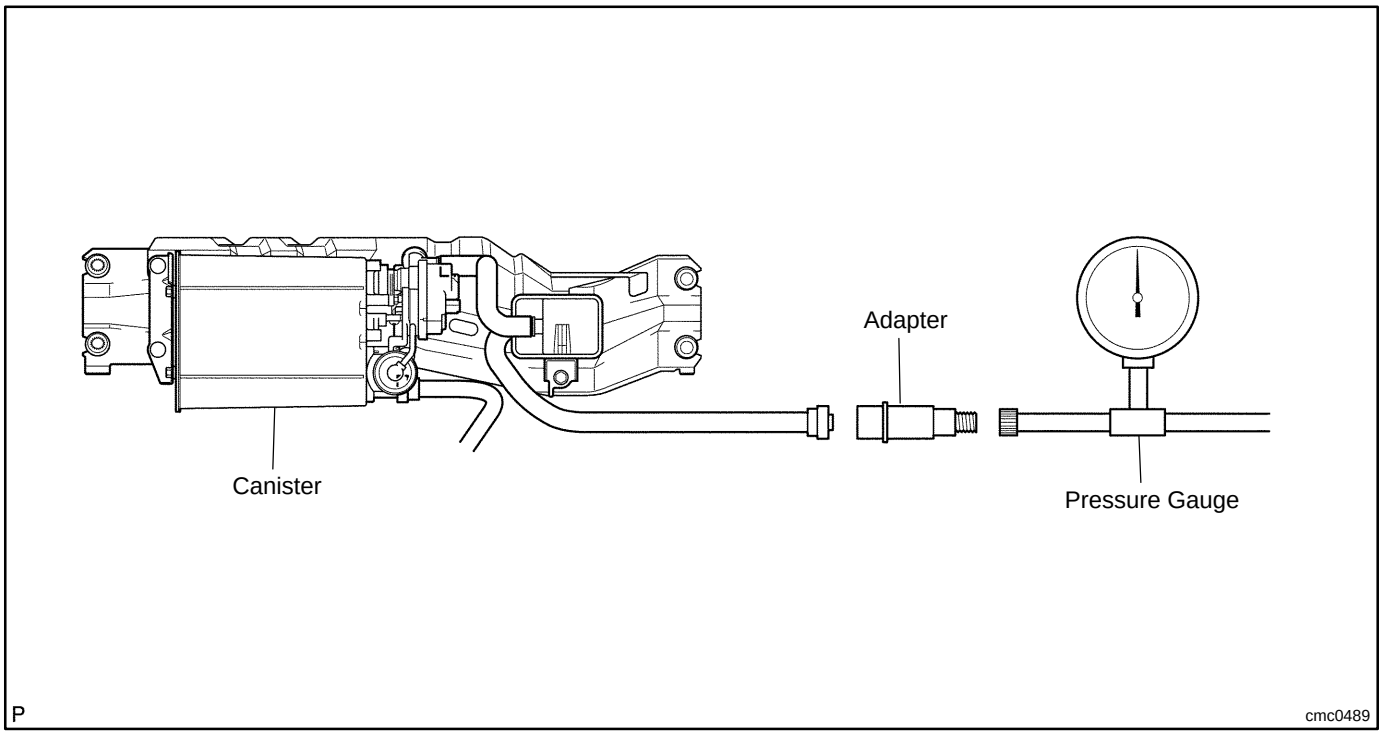

(c) Pressurize the EVAP system by 3.2 to 3.7 kPa (24 to 28 mmHg).
(d) Apply soapy water to the piping and the connecting parts of the EVAP system.
(e) Look for areas where bubbles appear. This indicates leak point.
(f) Repair or replace the leak point.

NEXT	**Go to step 37.**

30	**Replace charcoal canister.**

NEXT	**Go to step 37.**

31	**Replace EVAP VSV (See page SF−64).**

(a) Disconnect the connector and the hoses from the purge VSV.
(b) Remove the purge VSV.
(c) Install a new purge VSV.
(d) Reconnect the connector and hoses.

NEXT	**Go to step 37.**

32	**Repair or replace wire harness or connector.**

NEXT	**Go to step 37.**

33	**Replace EVAP hose between EVAP VSV and throttle body.**

NEXT	**Go to step 37.**

34	**Inspect throttle body.**

(a) Remove the throttle body (see page SF−44).
(b) Check that the EVAP purge port of the throttle body is not clogged. If necessary, replace the throttle body.

NEXT	**Go to step 37.**

35	**Replace ECM (See page SF−82)**

NEXT	**Go to step 37.**

36	**Repair or replace parts and components indicated by output DTCs.**

(a) Repair the malfunctioning areas indicated by the DTCs that had been confirmed when the vehicle was brought in.

NEXT	**Go to step 37.**

37	**Perform EVAP system auto operation check.**

NOTICE:

- **In the EVAP SYSTEM CHECK (AUTO OPERATION), the series of 4 EVAP SYSTEM CHECK steps is performed automatically by the hand−held tester. It takes a maximum of approximately 15 minutes.**
- **Do not perform the EVAP SYSTEM CHECK when the fuel tank is more than 90 % full because the cut−off valve may be closed and making the leak check of the fuel tank unavailable.**
- **Do not run the engine in this step.**
- **When the temperature of the fuel is 35°C (95°F) or more, a large amount of vapor forms and any check results become inaccurate. When performing an EVAP SYSTEM CHECK, keep the temperature below 35°C (95°F).**

(a) Clear DTCs (see page DI−462).
(b) On the hand−held tester, select the following menu items: DIAGNOSIS / ENHANCED OBD II / SYSTEM CHECK / EVAP SYS CHECK / AUTO OPERATION.
(c) After the SYSTEM CHECK is completed, check for pending DTCs by selecting the following menu items: DIAGNOSIS / ENHANCED OBD II / DTC INFO / PENDING CODES.

HINT:
If no pending DTC is found, the repair has been successfully completed.

NEXT

Completed

Monitor Confirmation

HINT:

After a repair, check Monitor Status by performing the Key−Off Monitor Confirmation and Purge Flow Monitor Confirmation described below.

1. KEY−OFF MONITOR CONFIRMATION

(a) Preconditions

The monitor will not run unless:

- The vehicle has been driven for 10 minutes or more (in a city area or on a free way)
- The fuel tank is less than 90 % full
- The altitude is less than 8,000 ft (2,400 m)
- The Engine Coolant Temperature (ECT) is between 4.4°C and 35°C (40°F and 95°F)
- The Intake Air Temperature (IAT) is between 4.4°C and 35°C (40°F and 95°F)
- The vehicle remains stationary (the vehicle speed is 0 mph [0 km/h])

(b) Monitor Conditions

(1) Allow the engine to idle for at least 5 minutes.

(2) Turn the ignition switch to OFF and wait for 6 hours (8 or 10.5 hours).

HINT:

Do not start the engine until checking MONITOR STATUS. If the engine is started, the steps described above must be repeated.

(c) Monitor Status

(1) Connect a hand−held tester to the DLC3.

(2) Turn the ignition switch to ON and turn the tester ON.

(3) On the tester, select the following menu items: DIAGNOSIS / ENHANCED OBD II / MONITOR STATUS.

(4) Check the Monitor Status displayed on the tester.

HINT:

If INCMP is displayed, the monitor is not completed. Make sure that the preconditions have been met, and perform the Monitor Conditions again.

2. PURGE FLOW MONITOR CONFIRMATION (P0441)

HINT:

Perform this monitor confirmation after the Key−Off Monitor Confirmation shows COMPL (complete).

(a) Preconditions

The monitor will not run unless:

- The vehicle has been driven for 10 minutes or more (in a city area or on a free way)
- The ECT is between 4.4°C and 35°C (40°F and 95°F)
- The IAT is between 4.4°C and 35°C (40°F and 95°F)

(b) Monitor Conditions

(1) Release the pressure from the fuel tank by removing and reinstalling the fuel tank cap.

(2) Warm the engine up until the ECT reaches more than 75°C (167°F).

(3) Increase the engine speed to 3,000 rpm once.

(4) Allow the engine to idle and turn A/C ON for 1 minute.

(c) Monitor Status
(1) Turn the ignition switch to OFF (where ON or the engine is running).
(2) Connect a hand−held tester to the DLC3.
(3) Turn the ignition switch to ON and turn the tester ON.
(4) On the tester, select the following menu items: DIAGNOSIS / ENHANCED OBD II / MONITOR STATUS.
(5) Check the Monitor Status displayed on the tester.

HINT:
If INCMP is displayed, the monitor is not completed. Make sure that the preconditions have been met, and perform the Monitor Conditions again.

MONITOR RESULT

Refer to page DI−445 for detailed information.
The test value and test limit information are described as shown in the following table. Check the monitor result and test values after performing the monitor drive pattern (refer to ”Confirmation Monitor”).

- MID (Monitor Identification Data) is assigned to each emissions−related component.
- TID (Test Identification Data) is assigned to each test value.
- Scaling is used to calculate the test value indicated on generic OBD ll scan tools.

EVAP−Key−off monitor

MID	TID	Scaling	Description of Test Value	Minimum Test Limit	Maximum Test Limit
$3D	$C9	Multiply by 0.01 (kPa)	Test value for small leak (P0456): Refer to pressure D*.	Minimum test limit for small leak	Maximum test limit for small leak
$3D	$CA	Multiply by 0.01 (kPa)	Test value for gross leak (P0455): Refer to pressure E*.	Minimum test limit for gross leak	Maximum test limit for gross leak
$3D	$CB	Multiply by 0.01 (kPa)	Test value for vacuum pump stuck OFF (P2401): Refer to pressure A*.	Minimum test limit for vacuum pump stuck OFF	Maximum test limit for vacuum pump stuck OFF
$3D	$CD	Multiply by 0.01 (kPa)	Test value for vacuum pump stuck ON (P2402): Refer to pressure A*.	Minimum test limit for vacuum pump stuck ON	Maximum test limit for vacuum pump stuck ON
$3D	$CE	Multiply by 0.01 (kPa)	Test value for vent valve stuck OFF (vent) (P2420): Refer to pressure C*.	Minimum test limit for vent valve stuck ON	Maximum test limit for vent valve stuck ON
$3D	$CF	Multiply by 0.01 (kPa)	Test value for vent valve stuck ON (closed) (P2419): Refer to pressure A*.	Minimum test limit for vent valve stuck OFF	Maximum test limit for vent valve stuck OFF
$3D	$D0	Multiply by 0.01 (kPa)	Test value for 0.02 inch orifice low flow (P043E): Refer to pressure B*.	Minimum test limit for 0.02 inch orifice low flow	Maximum test limit for 0.02 inch orifice low flow
$3D	$D1	Multiply by 0.01 (kPa)	Test value for 0.02 inch orifice high flow (P043F): Refer to pressure A*.	Minimum test limit for 0.02 inch orifice high flow	Maximum test limit for 0.02 inch orifice high flow
$3D	$D4	Multiply by 0.01 (kPa)	Test value for purge VSV stuck close (P0441): Refer to pressure F*.	Minimum test limit for purge VSV stuck close	Maximum test limit for purge VSV stuck close
$3D	$D5	Multiply by 0.01 (kPa)	Test value for purge VSV stuck open (P0441): Refer to pressure E*.	Minimum test limit for purge VSV stuck open	Maximum test limit for purge VSV stuck open
$3D	$D7	Multiply by 0.01 (kPa)	Test value for purge flow (P0441): Refer to pressure G*.	Minimum test limit for purge flow	Maximum test limit for purge flow

* Pressure A to G are indicated as shown in the diagram below.

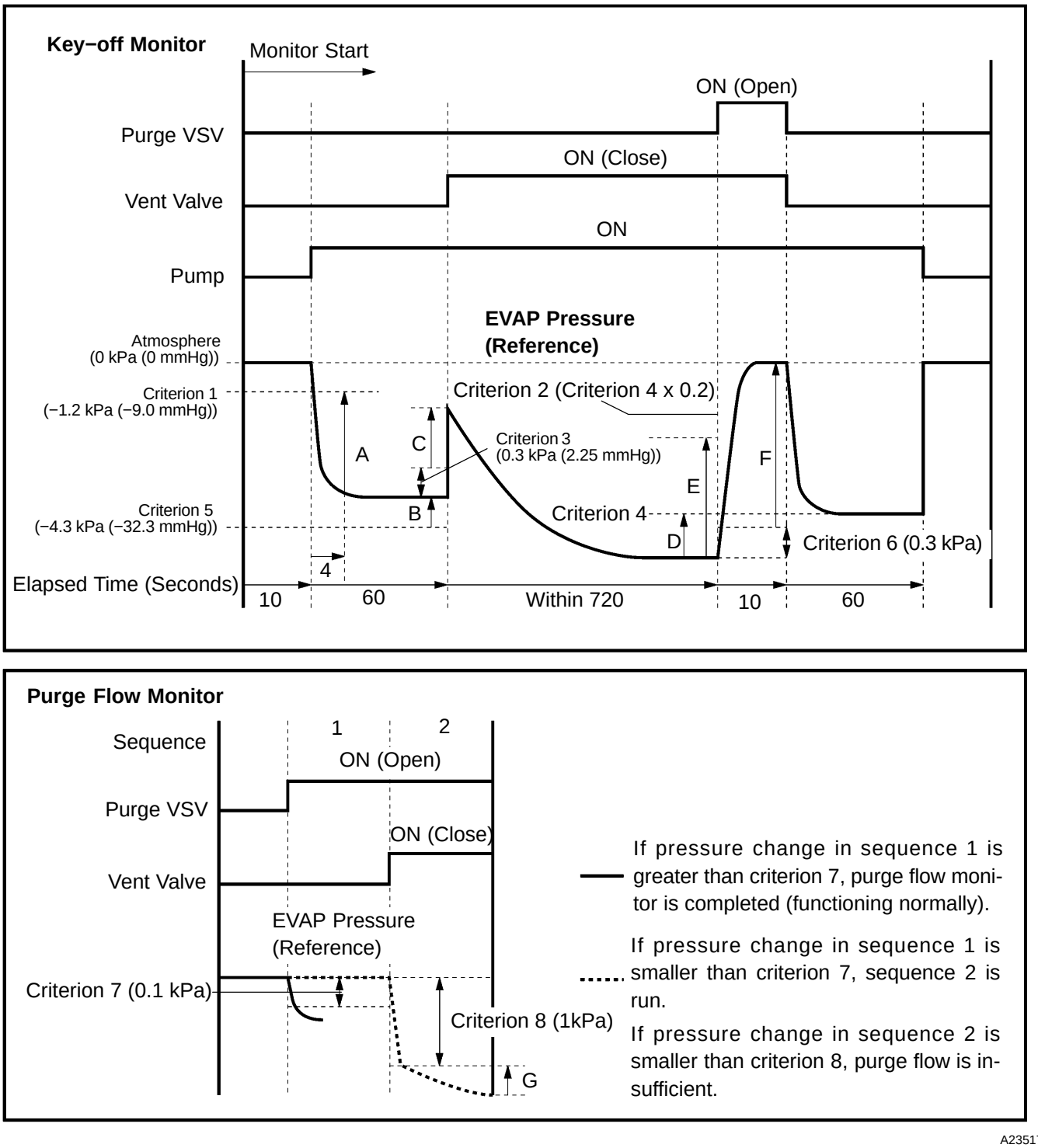
Key−off Monitor
Monitor Start
ON (Open)
Purge VSV
ON (Close)
Vent Valve
ON
Pump
EVAP Pressure
(Reference)
Atmosphere
(0 kPa (0 mmHg))
Criterion 1
(−1.2 kPa (−9.0 mmHg))
Criterion 2 (Criterion 4 x 0.2)
A
C
Criterion 3
(0.3 kPa (2.25 mmHg))
F
E
Criterion 5
(−4.3 kPa (−32.3 mmHg))
B
Criterion 4
D
Criterion 6 (0.3 kPa)
4
Elapsed Time (Seconds)
10
60
Within 720
10
60
Purge Flow Monitor
Sequence
1
2
ON (Open)
Purge VSV
ON (Close)
Vent Valve
EVAP Pressure
(Reference)
Criterion 7 (0.1 kPa)
Criterion 8 (1kPa)
G
If pressure change in sequence 1 is greater than criterion 7, purge flow monitor is completed (functioning normally).
If pressure change in sequence 1 is smaller than criterion 7, sequence 2 is run.
If pressure change in sequence 2 is smaller than criterion 8, purge flow is insufficient.
C
A23517

DIDSI−01

Fuel Pump Control Circuit

CIRCUIT DESCRIPTION

Refer to DTC P0230 on page DI−600.

WIRING DIAGRAM

Refer to DTC P0230 on page DI−600.

INSPECTION PROCEDURE

1	**Check fuel pump operation (See page SF−7).**

OK → **Go to step 8.**

NG

2	**Connect hand−held tester, and check operation of fuel pump relay.**

PREPARATION:

(a) Connect the hand−held tester to the DLC3.
(b) Turn the ignition switch ON and push the hand−held tester main switch ON.
(c) Enter the following menu: DIAGNOSIS / ENHANCED OBD II / ACTIVE TEST / FUEL PUMP SPD.

CHECK:

Check the operation of the fuel pump relay when it is switched ON and OFF by the hand−held tester.

OK:

Operating noise can be heard from the relay.

OK → **Go to step 4.**

NG

3	Check operation of fuel pump relay.

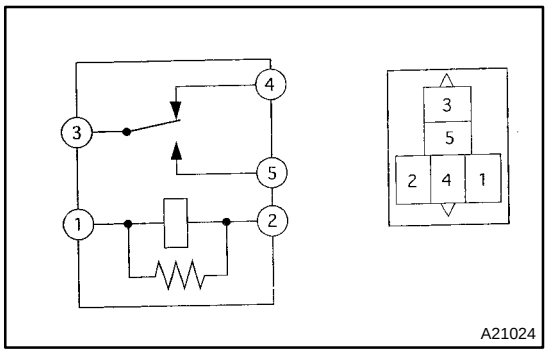

PREPARATION:
Remove the fuel pump relay from the engine room R/B.
CHECK:
Inspect the fuel pump relay.
OK:

Terminal No.	Condition	Specified Condition
3 − 4	Apply B+ between terminals 1 and 2	10 KΩ or higher
3 − 4	Always	Below 1 Ω
3 − 5	Always	10 KΩ or higher
3 − 5	Apply B+ between terminals 1 and 2	Below 1 Ω

NG → **Replace fuel pump relay.**

OK

4	Check fuel pump (See page SF−15).

NG → **Repair or replace fuel pump.**

OK

5	Check circuit opening relay).

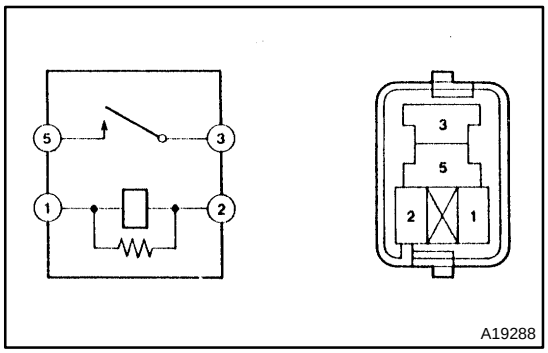

PREPARATION:
Remove the C/OPN relay from the engine room J/B.
CHECK:
Inspect the C/OPN relay.
OK:

Standard:

Terminal No.	Condition	Specified Condition
3 − 5	Always	10 KΩ or higher
3 − 5	Apply B+ between terminals 1 and 2	Below 1 Ω

NG → **Replace circuit opening relay.**

OK

6	**Check for open in harness and connector between circuit opening relay and fuel pump, and fuel pump and body ground (See page IN−30).**

NG → **Repair or replace harness or connector.**

OK

7	**Check voltage between terminal FC and E1 of ECM connector.**

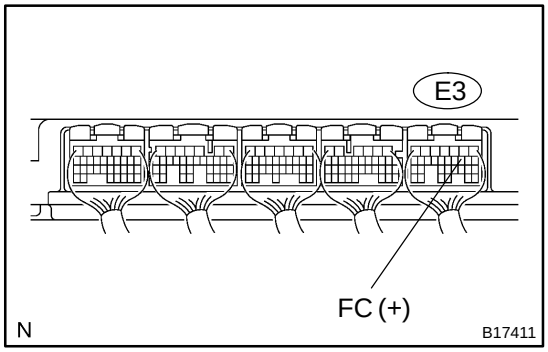

PREPARATION:
Turn the ignition switch ON.
CHECK:
Measure the voltage between terminal FC of the ECM connector and body ground.
OK:
Voltage: 9 to 14 V

NG → **Check for open in harness and connector between battery and FC terminal of ECM (See page IN−30).**

OK

Proceed to problem symptoms table (See page DI−452).

8	**Check fuel pump resistor (See page SF−63).**

NG → **Replace fuel pump resistor.**

OK

Check for open in harness and connector between circuit opening relay and fuel pump resistor, and fuel pump resistor and fuel pump (See page IN−30).

DIDSJ−01

MIL Circuit

CIRCUIT DESCRIPTION

If the ECM detects a trouble, the MIL lights up. At this time, the ECM records a DTC in the memory.

WIRING DIAGRAM

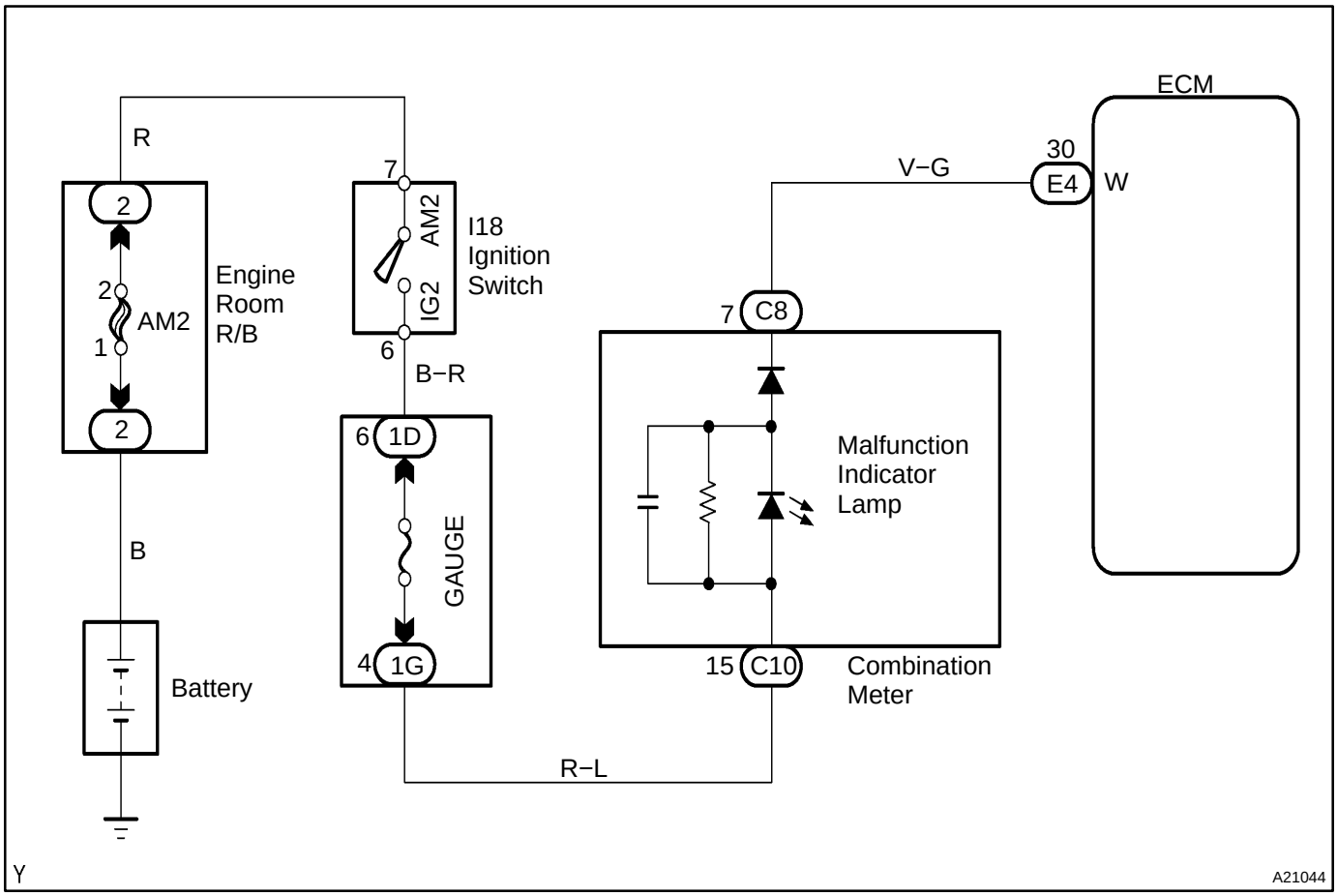

INSPECTION PROCEDURE

HINT:

Troubleshoot each trouble symptom in accordance with the chart below .

MIL remains on	Start inspection from step 1
MIL does not light up	Start inspection from step 3

1	**Clear DTC.**

PREPARATION:

(a) Connect the hand−held tester to the DLC3.
(b) Turn the ignition switch ON and push the hand−held tester main switch ON.
(c) Read the DTC (See page DI−462).
(d) Clear DTCs (see page DI−462).

CHECK:

(a) Check that MIL does not light up.

OK:

Standard: MIL does not light up

OK → **Repair circuit indicated by output code (See page DI−477).**

NG

2	**Check Harness and connector (Check for short in wire harness).**

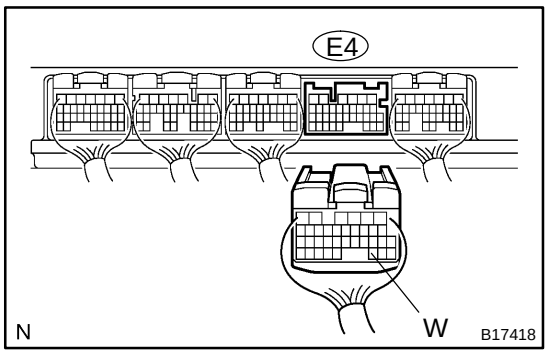

PREPARATION:

(a) Disconnect the E4 ECM connector.
(b) Turn the ignition switch ON.

CHECK:

(a) Check that MIL does not light up.

OK:

Standard: MIL does not light up

OK → **Replace ECM (See page SF−82).**

NG

Check and repair harness and connector between combination meter and ECM.

3	**Check that MIL lights up.**

CHECK:

Check that MIL lights up when turning the ignition switch ON.

OK:

Standard: MIL lights up

OK → **System OK.**

NG

4	**Inspect combination meter assy (MIL circuit).**

See the combination meter troubleshooting on page BE−86.

NG → **Repair or replace bulb or combination meter assembly.**

OK

Check and repair harness and connector between combination meter and ECM.

DIDSC−01

DTC	P2A00	A/F Sensor Circuit Slow Response (Bank 1 Sensor 1)

DTC	P2A03	A/F Sensor Circuit Slow Response (Bank 2 Sensor 1)

CIRCUIT DESCRIPTION

Refer to DTC P2195 on page DI−806.

DTC No.	DTC Detection Conditions	Trouble Areas
P2A00 P2A03	Calculated test value for A/F sensor response rate deterioration level is less than threshold.	• Open or short in A/F sensor (sensor 1) circuit • A/F sensor (sensor 1) • ECM

MONITOR DESCRIPTION

After engine is warmed up, the ECM performs air−fuel ratio feedback control to regulate the air−fuel ratio at stoichiometric ratio. In addition, this vehicle performs Active A/F Ratio Control for approximately 10 seconds after preconditions met in order to measure the A/F sensor response rate. During active air−fuel ratio control, the ECM forcibly increases and decreases the injection volume for certain amount based on learned stoichiomentric air −fuel ratio during usual air−fuel feedback control, and measures the A/F sensor response rate. The ECM calculates the signal from the A/F sensor while value for A/F sensor response rate deterioration level.

If the test value for A/F sensor response rate deterioration level is less than threshold, ECM interprets this as a malfunction, and sets the DTC.

Air−fuel Ratio Sensor Output:

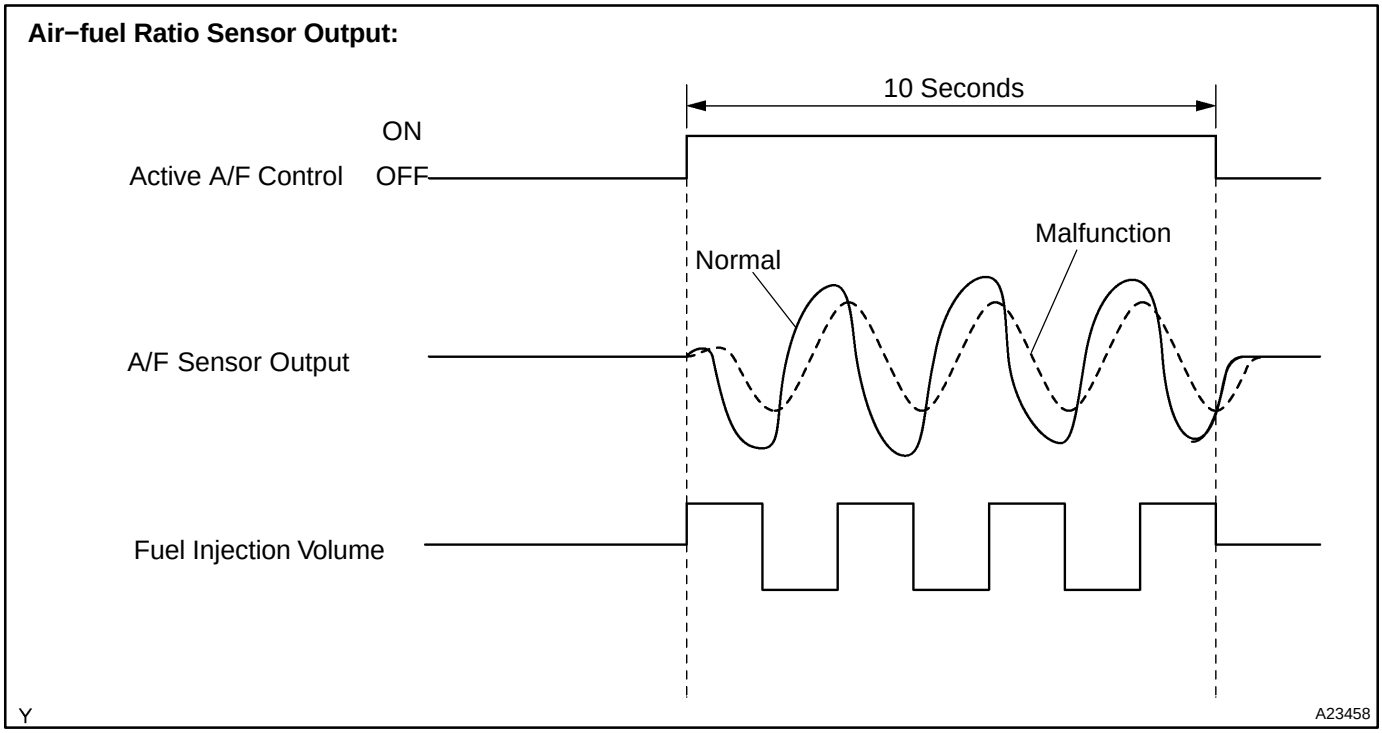

CONFIRMATION DRIVING PATTERN

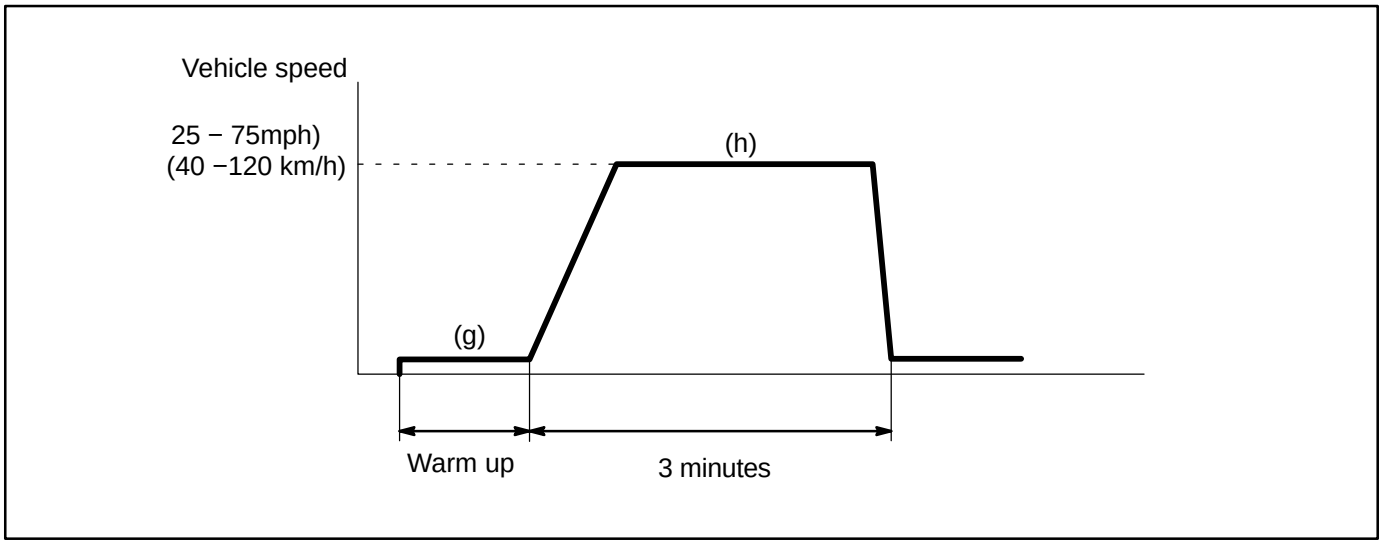

(a) Connect the hand−held tester to the DLC3.
(b) Turn the ignition switch to ON.
(c) Turn the hand−held tester ON.
(d) Clear DTCs.
(e) Select the following menu items: DIAGNOSIS/ENHANCED OBD II/MONITOR INFO/MONITOR RESULT.
(f) Check that RES RATE B1 S1 is INCOMPL.
(g) Start the engine and warm it up.
(h) Drive the vehicle at between 25 mph and 75 mph (40 km/h and 120km/h) for 3 minutes. However, the vehicle should be driven at constant−speed.
(i) When detection is complete, Response rate of MONITOR RESULT changes.

If the value does not change, perform step (g) once more.

(j) Notes the value of the Monitor Result.
(k) Select the following menu items: DIAGNOSIS/ENHANCED OBD II/DTC INFO/ PENDING CODES.
(l) Check if any DTCs (any pending DTCs) are set.

MONITOR STRATEGY

Related DTCs	P2A00	A/F sensor (Bank 1) slow response
	P2A03	A/F sensor (Bank 2) slow response
Required sensors/components	A/F sensor	
Frequency of operation	Once per driving cycle	
Duration	10 to 15 sec.	
MIL operation	2 driving cycles	
Sequence of operation	None	

TYPICAL ENABLING CONDITIONS

Item	Specification	
	Minimum	Maximum
The monitor will run whenever these DTCs are not present	See page DI−437	
Active A/F control	Performing	
Active A/F control is performed when the following conditions are met:	−	
Battery voltage	11 V	−
ECT	75°C (167°F)	−
Idle	OFF	
Engine RPM	−	4,000 rpm
A/F sensor status	Activated	
Fuel cut	OFF	
Engine load	10 to 70%	
Shift position	2nd	−
Catalyst monitor	Not executing	
Intake air amount	2.5 to 12 g/sec	

TYPICAL MALFUNCTION THRESHOLDS

Detection Criteria	Threshold
Response rate deterioration level	Less than 0.2 V

MONITOR RESULT

Refer to page DI−445 for detailed information.

The test value and test limit information are described as shown in the following table. Check the monitor result and test values after performing the monitor drive pattern (refer to ”Confirmation Monitor”).

- MID (Monitor Identification Data) is assigned to each emissions−related component.
- TID (Test Identification Data) is assigned to each test value.
- Scaling is used to calculate the test value indicated on generic OBD II scan tools.

A/F sensor bank 1 sensor 1

MID	TID	Scaling	Description of Test Value	Minimum Test Limit	Maximum Test Limit
$01	$8E	Multiply by 0.0003 (no dimension)	Response rate deterioration level for A/F sensor	Malfunction criterion	FF

A/F sensor bank 2 sensor 1

MID	TID	Scaling	Description of Test Value	Minimum Test Limit	Maximum Test Limit
$05	$8E	Multiply by 0.0003 (no dimension)	Response rate deterioration level for A/F sensor	Malfunction criterion	FF

WIRING DIAGRAM

Refer to DTC P2195 on page DI−806.

INSPECTION PROCEDURE

HINT:

Hand−held tester only:

Malfunctioning areas can be identified by performing the A/F CONTROL function provided in the ACTIVE TEST. The A/F CONTROL function can help to determine whether the Air−Fuel Ratio (A/F) sensor, Heated Oxygen (HO2) sensor and other potential trouble areas are malfunctioning.

The following instructions describe how to conduct the A/F CONTROL operation using a hand−held tester.

(1) Connect a hand−held tester to the DLC3.
(2) Start the engine and turn the tester ON.
(3) Warm up the engine at an engine speed of 2,500 rpm for approximately 90 seconds.
(4) On the tester, select the following menu items: DIAGNOSIS / ENHANCED OBD II / ACTIVE TEST / A/F CONTROL.
(5) Perform the A/F CONTROL operation with the engine in an idling condition (press the RIGHT or LEFT button to change the fuel injection volume).
(6) Monitor the voltage outputs of the A/F and HO2 sensors (AFS B1S1 (AFS B2S1) and OS2 B1S2 (O2S B2S2)) displayed on the tester.

HINT:

- The A/F CONTROL operation lowers the fuel injection volume by 12.5 % or increases the injection volume by 25 %.
- Each sensor reacts in accordance with increases and decreases in the fuel injection volume.

Standard:

Tester Display (Sensor)	Injection Volumes	Status	Voltages
AFS B1S1 (AFS B2S1) (A/F)	+25 %	Rich	Less than 3.0
AFS B1S1 (AFS B2S1) (A/F)	−12.5 %	Lean	More than 3.35
O2S B1S2 (O2S B2S2) (HO2)	+25 %	Rich	More than 0.55
O2S B1S2 (O2S B2S2) (HO2)	−12.5 %	Lean	Less than 0.4

NOTICE:
The Air−Fuel Ratio (A/F) sensor has an output delay of a few seconds and the Heated Oxygen (HO2) sensor has a maximum output delay of approximately 20 seconds.

Case	A/F Sensor (Sensor 1) Output Voltage	HO2 Sensor (Sensor 2) Output Voltage	Main Suspected Trouble Areas
1	Injection volume +25 % −12.5 % Output voltage More than 3.35 V Less than 3.0 V **OK**	Injection volume +25 % −12.5 % Output voltage More than 0.55 V Less than 0.4V **OK**	—
2	Injection volume +25 % −12.5 % Output voltage Almost no reaction **NG**	Injection volume +25 % −12.5 % Output voltage More than 0.55 V Less than 0.4V **OK**	● A/F sensor ● A/F sensor heater ● A/F sensor circuit
3	Injection volume +25 % −12.5 % Output voltage More than 3.35 V Less than 3.0V **OK**	Injection volume +25 % −12.5 % Output voltage Almost no reaction **NG**	● HO2 sensor ● HO2 sensor heater ● HO2 sensor circuit
4	Injection volume +25 % −12.5 % Output voltage Almost no reaction **NG**	Injection volume +25 % −12.5 % Output voltage Almost no reaction **NG**	● Injector ● Fuel pressure ● Gas leakage from exhaust system (Air−fuel ratio extremely lean or rich)

- Following the A/F CONTROL procedure enables technicians to check and graph the voltage outputs of both the A/F and HO2 sensors.
- To display the graph, select the following menu items on the tester: DIAGNOSIS / ENHANCED OBD II / ACTIVE TEST / A/F CONTROL / USER DATA / AFS B1S1 and O2S B1S2, and press the YES button and then the ENTER button followed by the F4 button.

HINT:

- DTC P2A00 may be also set, when the air−fuel ratio is stuck rich or lean.
- A low A/F sensor voltage could be caused by a rich air−fuel mixture. Check for conditions that would cause the engine to run rich.
- A high A/F sensor voltage could be caused by a lean air−fuel mixture. Check for conditions that would cause the engine to run lean.
- Read freeze frame data using a hand−held tester or OBD II scan tool. Freeze frame data record the engine condition when malfunctions are detected. When troubleshooting, freeze frame data can help determine if the vehicle was moving or stationary, if the engine was warmed up or not, if the air−fuel ratio was lean or rich, and other data, from the time the malfunction occurred.

1	**Check any other DTCs output (in addition to DTC P2A00 or P2A03).**

PREPARATION:

(a) Connect a hand−held tester to the DLC3.
(b) Turn the ignition switch to ON and turn the tester ON.
(c) Select the following menu items: DIAGNOSIS / ENHANCED OBD II / DTC INFO / CURRENT CODES.

CHECK:

(a) Read DTCs.

Result:

Display (DTC Output)	Proceed To
P2A00 and/or P2A03	A
P2A00 and/or P2A03 and other DTCs	B

HINT:
If any DTCs other than P2A00 and/or P2A03 are output, troubleshoot those DTCs first.

B → **Go to relevant DTC chart (See page DI−477).**

A

2	**Check resistance of air−fuel ratio (A/F) sensor heater.**

Component Side:

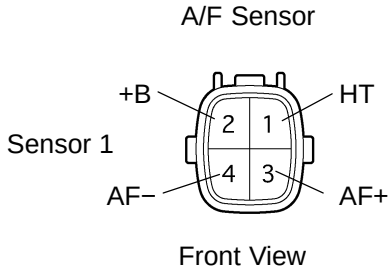

PREPARATION:

Disconnect the air−fuel ratio (A/F) sensor connector.

CHECK:

Measure resistance between the terminals of the A/F sensor connector.

OK:

Standard:

Tester Connection	Specified Condition
HT (1) − +B (2)	Between 1.8 Ω and 3.4 Ω at 20°C (68°F)
HT (1) − AF− (4)	10 kΩ or higher

NG → **Replace air−fuel ratio (A/F) sensor.**

OK

3	**Check for open and short in harness and connector between ECM and A/F sensor.**

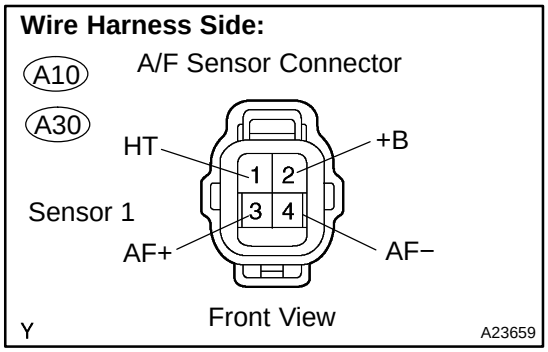

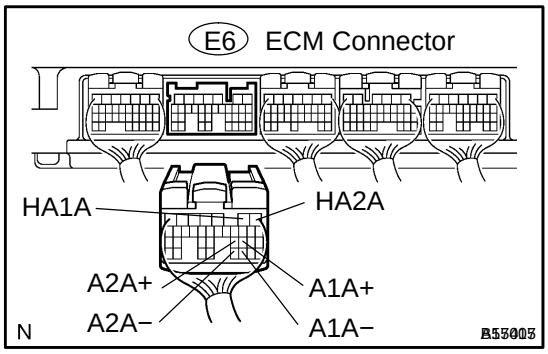

PREPARATION:

(a) Disconnect the A10 or A30 A/F sensor connector.

(b) Turn the ignition switch to ON.

CHECK:

(a) Measure the voltage between the +B terminal of the A/F sensor connector and body ground.

OK:

Standard:

Tester Connections	Specified Conditions
+B (2) − Body ground	Between 9 V and 14 V

PREPARATION:

(a) Turn the ignition switch to OFF.

(b) Disconnect the E6 ECM connector.

CHECK:

(a) Check the resistance.

OK:

Standard (Check for open):

Tester Connections	Specified Conditions
HT (A10−1) − HA1A (E6−2) HT (A30−1) − HA2A (E6−1)	Below 1 Ω
AF+ (A10−3) − A1A+ (E6−22) AF+ (A30−3) − A2A+ (E6−23)	Below 1 Ω
AF− (A10−4) − A1A− (E6−30) AF− (A30−4) − A2A− (E6−31)	Below 1 Ω

Standard (Check for short):

Tester Connections	Specified Conditions
HT (A10−1) or HA1A (E6−2) − Body ground HT (A30−1) or HA2A (E6−1) − Body ground	10 kΩ or higher
AF+ (A10−3) or A1A+ (E6−22) − Body ground AF+ (A30−3) or A2A+ (E6−23) − Body ground	10 kΩ or higher
AF− (A10−4) or A1A− (E6−30) − Body ground AF− (A30−4) or A2A− (E6−31) − Body ground	10 kΩ or higher

Reference (Bank 1 Sensor 1 System Drawing):

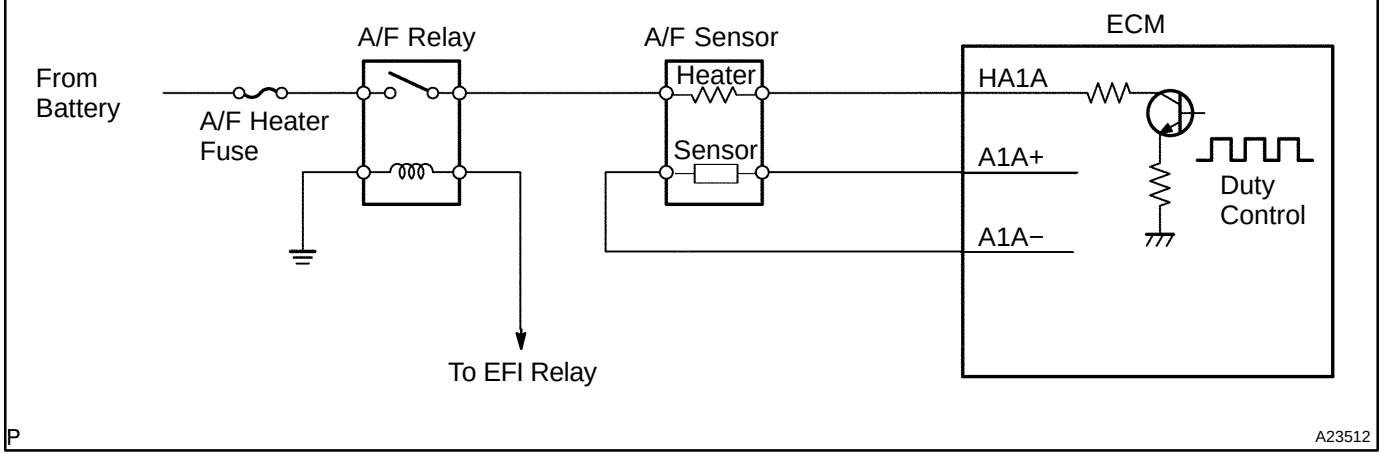

NG → **Replace or replace harness or connector.**

OK

4	**Perform confirmation driving pattern.**

NEXT

5	**Check whether DTC output recurs (DTC P2A00 or P2A03)**

CHECK:

(a) On the hand−held tester, select the following menu items: DIAGNOSIS / ENHANCED OBD II / DTC INFO / PENDING CODES.

(b) Read DTCs.

RESULT:

Display (DTC Output)	Proceed To
P2A00 or P2A03	A
No output	B

B → **Check for intermittent problems (See page DI−430).**

A

6	**Replace air fuel ratio sensor.**

NEXT

7	**Perform confirmation driving pattern.**

NEXT

8	Check whether DTC output recurs (DTC P2A00 or P2A03)

CHECK:

(a) On the hand−held tester, select the following menu items: DIAGNOSIS / ENHANCED OBD II / DTC INFO / PENDING CODES.

(b) Read DTCs.

RESULT:

Display (DTC Output)	Proceed To
P2A00 or P2A03	A
No output	B

A → **Check air−fuel ratio extremely lean or rich (See page DI−586).**

B →

END

DIDRV−01

DTC	P1340	Camshaft Position Sensor ”A” (Bank 1 Sensor 1)

DTC	P1341	Camshaft Position Sensor ”A” (Bank 1 Sensor 1)

CIRCUIT DESCRIPTION

Camshaft position sensor (G signal) consists of a magnet, iron core and pickup coil.
The camshaft drive gear (LH) has 3 teeth on its inner circumference. When the camshaft gear rotates, air gap changes between the protrusion on the gear and the pickup coil. The change affects the magnetic field and result in change in the resistance of the MRE element.
The crankshaft signal plate has 32 teeth and is mounted on the crankshaft. The crankshaft position sensor generates 32 signals at every engine revolution. The ECM detects the standard crankshaft angle based on the G signal and the actual crankshaft angle and the engine speed by the NE signal.

DTC No.	DTC Detecting Condition	Trouble Area
P1340 P1341	No camshaft position sensor signal to ECM during cranking (2 trip detection logic)	• Open or short in camshaft position sensor circuit • Camshaft position sensor • LH camshaft timing pulley • ECM
	No camshaft position sensor signal to ECM with engine speed 600 rpm or more	

MONITOR DESCRIPTION

The camshaft position sensor (G signal) consists of a magnet and MRE element.
The camshaft drive gear has 5 teeth on its inner circumference. When the camshaft gear rotates, air gap changes between the protrusion on the gear and the pickup coil. The change affects the magnetic field and result in change in the resistance of the MRE element. The crankshaft angle sensor plate has 32 teeth and output 32 signals every engine revolution. The ECM detects the standard crankshaft angle based on the G signal and actual crankshaft angle and engine speed by NE signal.

MONITOR STRATEGY

Related DTCs	P1340	Camshaft position sensor (Bank 1) range check or rationality
	P1341	Camshaft position sensor (Bank 1) range check or rationality
Required sensors/components	Main sensors/components	Camshaft position sensor
	Related sensors/components	Crankshaft position sensor, Engine speed sensor
Frequency of operation	Continuous	
Duration	5 sec.	
MIL operation	P1340 case 1 (no signal): 2 driving cycles P1340 case 2 (mis−aligned), P1341: Immediate	
Sequence of operation	None	

TYPICAL ENABLING CONDITIONS

Item	Specification	
	Minimum	Maximum
The monitor will run whenever these DTCs are not present	See page DI−437	
P1340 Case 1 (No signal):		
Starter	ON	
Minimum battery voltage while starter ON	−	11 V
P1340 Case 2 (Mis−aligned):		
Engine RPM	600 rpm	−
Starter	OFF	
P1341:		
Starter	After OFF to ON timing	

TYPICAL MALFUNCTION THRESHOLDS

Detection Criteria	Threshold
P1340 Case 1 (No signal):	
Camshaft position sensor signal	No signal
P1340 Case 2 (Mis−aligned):	
Crankshaft/camshaft alignment is mis−aligned (judged by comparing the crankshaft position to the camshaft position)	
Camshaft position sensor signal: No input in appropriate timing.	
P1341:	
Crankshaft/Camshaft alignment	Mis−aligned
Camshaft position sensor count	12 or more / 720°CA (= Engine 2 revolutions)

COMPONENT OPERATING RANGE

Parameter	Standard Value
Camshaft position sensor signal input at every 720°CA	3

WIRING DIAGRAM

Refer to DTC P0335 on page DI−632.

INSPECTION PROCEDURE

HINT:

Read freeze frame data using hand−held tester. Because freeze frame records the engine conditions when the malfunction is detected. When troubleshooting, it is useful for determining whether the vehicle was running or stopped, the engine was warmed up or not, the air−fuel ratio was lean or rich, etc. at the time of the malfunction.

1	Check voltage of camshaft position sensor power source circuit.

Wire Harness Side:

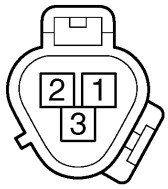

Camshaft Position Sensor

N B17445

PREPARATION:

(a) Disconnect the Camshaft position sensor connector.

(b) Turn the ignition switch to ON.

CHECK:

Measure the voltage between terminal 3 of the camshaft position sensor connector and body ground.

OK:

Standard: 4.5 to 5.5 V

NG → **Repair or replace harness or connector.**

OK

2	Check camshaft position sensor signal.

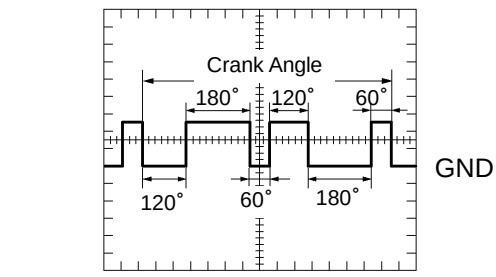

Y

PREPARATION:

Start the engine.

CHECK:

Check the waveform between the G2+ (E5−19) and G2− (E5−29) of the ECM connector.

OK:

Standard: Correct waveform is as shown.

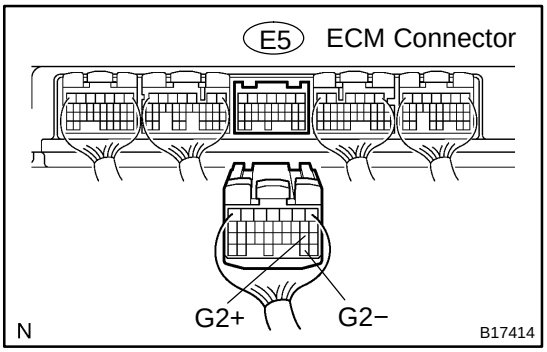

N

OK → **Replace ECM (See page SF−82).**

NG

3	Check for open and short in harness and connector between ECM and camshaft position sensor.

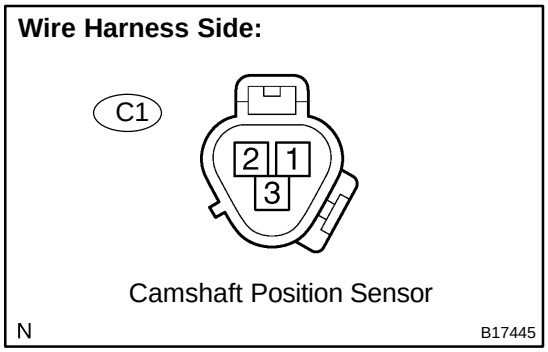

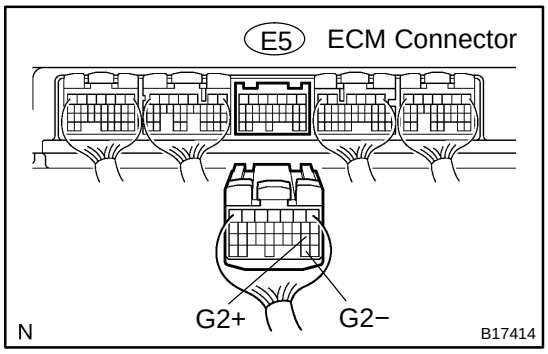

PREPARATION:

(a) Disconnect the Camshaft position sensor connector.

(b) Disconnect the E5 ECM connector.

CHECK:

Measure the resistance between wire harness side connectors.

OK:

Standard:

Tester Connection	Specified Condition
Camshaft position sensor (C1−2) − G2+ (E5−19)	Below 1 Ω
Camshaft position sensor (C1−1) − G2− (E5−29)	Below 1 Ω
Camshaft position sensor (C1−2) or G2+ (E5−19) − Body ground	10 kΩ or higher
Camshaft position sensor (C1−1) or G2− (E5−29) − Body ground	10 kΩ or higher

NG → **Repair or replace harness or connector.**

OK ↓

4	Inspect sensor installation and signal plate tooth of LH camshaft timing pulley.

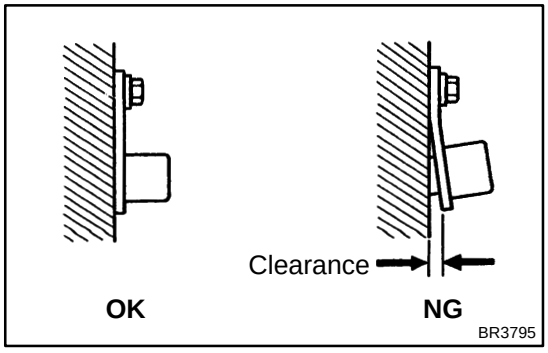

CHECK:

Check the camshaft position sensor installation.

OK:

The camshaft position sensor is installed properly.

NG → **Tighten sensor installation bolt.**

OK ↓

5	**Inspect signal plate tooth of LH camshaft timing pulley.**

NG → **Replace LH camshaft timing pulley.**

OK

Replace camshaft position sensor.

DIDRZ−01

DTC	P1613	Air Injection System Air Injection Driver

CIRCUIT DESCRIPTION

Refer to DTC P0412 on page DI−656.

DTC No.	DTC Detection Condition	Trouble Area
P1613	Either of following condition (a) or (b) met: (a) All of following condition met (1 trip detection logic): • While either of air pump or air switching valve does not operate. • Air injection driver outputs normal signal (80% duty signal) (b) All of following condition met (1 trip detection logic): • Air injection driver outputs abnormal duty signal (duty signal excluding 0, 20, 40, 60, 80, 100%)	• Air injection driver (AID) • Open in air injection driver ground circuit
P1613	All of following condition met (1 trip detection logic): (a) While air injection system operating (Air pump ON and all ASV ON) (b) Air injection driver outputs air pump malfunction signal (0% duty signal)	• Short in diagnostic information signal circuit (AID − ECM) • Open or short in air pump and air switching valve command signal circuit (AID − ECM) • Air injection driver (AID) • Open in air injection driver ground circuit • ECM
P1613	Air injection driver outputs abnormal duty signal (100% duty signal) (1 trip detection logic)	• Open or short in AID power source circuit • Open in diagnostic information signal circuit (AID − ECM) • Air injection driver (AID) • ECM

MONITOR DESCRIPTION

When the air injection system operation is required while the engine is warming up, the ECM transmits command signals to the Air Injection Driver (AID) to drive the air pump and air switching valve.

AID detects an open and short in the air pump and air switching valve circuit according to the terminal voltage and sends a signal as the diagnostic information to the ECM.

If the air injection system drive circuit or the AID itself has a malfunction, the AID sends a malfunction signal (duty signal) as a diagnostic information signal to the ECM (when the system is normal, a system normal signal is sent).

The ECM sets the DTC based on the diagnostic information from the AID.

Example:

(1) The duty ratio of the diagnostic information signal output from AID is 0 or 100% (remains at 0 V or battery voltage).

(2) The duty ratio output from AID is the ratio to output the impossible (excluding 0, 20, 40, 60, 80, 100%).

(3) The AID outputs the normal signal (normal duty signal: 80%) while the system not operating.

MONITOR STRATEGY

Related DTCs	P1613	Secondary air injection system control module range check
Required sensors/components	Air injection driver	
Frequency of operation	Continuous	
Duration	3 sec.	
MIL operation	Immediate	
Sequence of operation	None	

TYPICAL ENABLING CONDITIONS

Item	Specification	
	Minimum	Maximum
The monitor will run whenever this DTC is not present	See page DI−437	
Case 1:		
Battery voltage	8 V	−
Ignition switch	ON	
Starter	OFF	
Case 2:		
Either of following conditions is met	Condition 1 or 2	
1. Air pump	Not operating	
2. Air switching valve	Not operating	
Battery voltage	8 V	−
Ignition switch	ON	
Starter	OFF	
Case 3:		
Air pump	Operating	
Air switching valve	Operating	
Battery voltage	8 V	−
Ignition switch	ON	
Starter	OFF	
Case 4:		
Battery voltage	8 V	−
Ignition switch	ON	
Starter	OFF	

TYPICAL MALFUNCTION THRESHOLDS

Detection Criteria	Threshold
Case 1:	
One of the following conditions is met:	Condition 1, 2, 3 or 4
1. Diagnostic signal duty ratio from air injection driver	1 to 10 %
2. Diagnostic signal duty ratio from air injection driver	30 %
3. Diagnostic signal duty ratio from air injection driver	49 %
4. Diagnostic signal duty ratio from air injection driver	91 to 99 %
Case 2:	
Diagnostic signal duty ratio from air injection driver	70 to 90 %

Case 3:	
Diagnostic signal duty ratio from air injection driver	0 %
Case 4:	
Diagnostic signal duty ratio from air injection driver	100 %

COMPONENT OPERATING RANGE

Parameter	Standard Value
Diagnostic signal duty ratio from air injection driver	70 to 90% when secondary air injection system operating and 0% when secondary air injection system not operating

WIRING DIAGRAM

Refer to DTC P0412 on page DI−656.

INSPECTION PROCEDURE

HINT:

The diagnostic information output from the AID can be confirmed by connecting an oscilloscope to the diagnostic information terminal of the AID. It narrows a trouble area search to read the waveform on the oscilloscope when performing the AI system intrusive operation function provided in the SYSTEM CHECK.

(a) Start the engine and warm it up.
(b) Turn the ignition switch to OFF.
(c) Connect a hand−held tester to the DLC3.

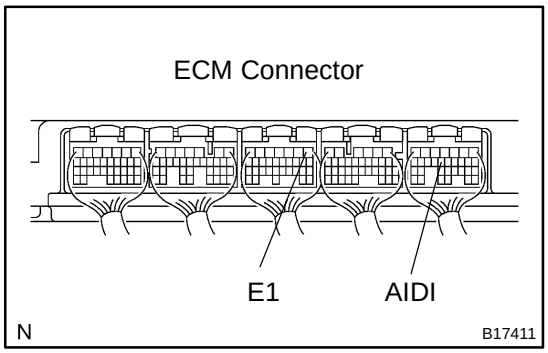

(d) Connect an oscilloscope probe to the AIDI terminal of the ECM.
(e) Start the engine and turn the tester ON.
(f) On the tester, select the following menu items: DIAGNOSIS / ENHANCED OBD II / SYSTEM CHECK / AIR INJ SYSTEM.

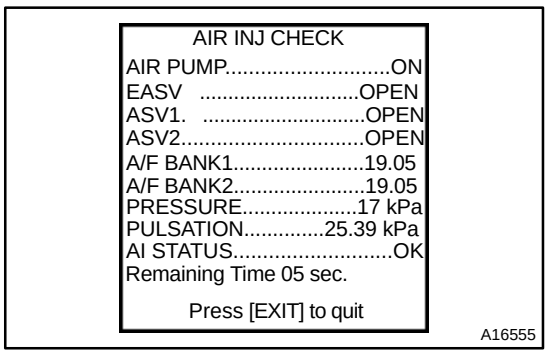

(g) On the tester, select the following menu items: DIAGNOSIS / ENHANCED OBD II / SYSTEM CHECK / AIR INJ CHECK / MANUAL OPERATION / OPERATION 1 and 2.

HINT:

OPERATION 1: AP: OFF, EASV:CLOSE, ASV1:CLOSE, ASV2:OFF

OPERATION 2: AP: ON, EASV:OPEN, ASV1:OPEN, ASV2:OPEN

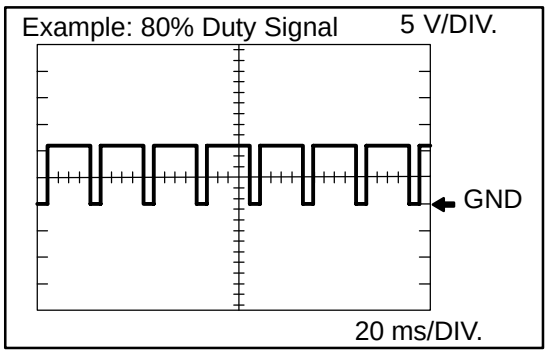

(1) Monitor the voltage output of the AID (duty ratio signal).

Oscilloscope range:

Items	Contents
Terminals	CH1: AIDI − E1
Equipment Settings	5 V/Division, 20 to 40 ms/Division
Conditions	Idling

NOTICE:

- **This AIR INJECTION CHECK only allows technicians to operate the AI system for 5 seconds. Furthermore, the check can be performed 4 times a trip. If the test is repeated, intervals of at least 30 seconds are required between checks.**
  While the AI system operation using the hand−held tester is prohibited, the tester displays the prohibition (WAIT or ERROR). If the ERROR (AI STATUS NG) is displayed on the tester, stop the engine for 10 minutes and then try again.
- **Performing the AIR INJ CHECK over and over again may cause the damage in the secondary air injection system. If necessary, put an interval of several minutes between tests to prevent overheating the system.**

AID Diagnostic Signal Waveforms	ECM Commands	DTCs (ECM Output)	Suspected Trouble Areas
100 % Duty ratio 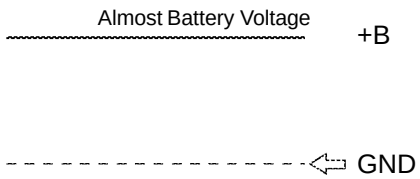	Any Air Injection (AI) System operation	**P1613**	• Open in diagnostic signal circuit • Air Injection Control Driver (AID) • Open in AID+B circuit (AID power source) • Short between +B circuit and diagnostic signal circuit
0 % Duty ratio 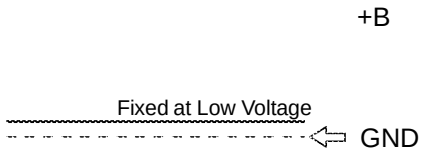	AI System: ON (Air pump ON, ASV ON)	**P1613**	• Open or short in air pump or Air Switching Valve (ASV) command signal circuit (ECM−AID) • Open in AID ground circuit • Short between diagnostic signal circuit and body ground • AID • ECM
	AI System: OFF (Air pump OFF, ASV OFF)	**–**	Normal
20 % Duty ratio 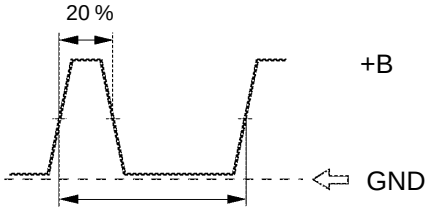	Air Pump: ON	**P0418**	Short between air pump drive circuit and body ground • Harness & connector (AID−Pump) • Air Pump • AID • ECM
	Air Pump: OFF	**P0418**	Open in air pump drive circuit (AID−Pump) , or short between air pump drive circuit and +B • Harness & connector (AID−Pump) • Air Pump • AID • ECM
40 % Duty ratio 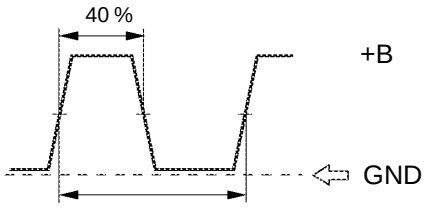	ASV: ON	**P0412**	Short between ASV drive circuit and body ground • Harness & connector (AID−ASV) • ASV • AID • ECM
	ASV: OFF	**P0412**	Open in ASV drive circuit (AID−ASV), or short between ASV drive circuit and +B • Harness & connector (AID−ASV) • AID • ASV • ECM
80 % Duty ratio 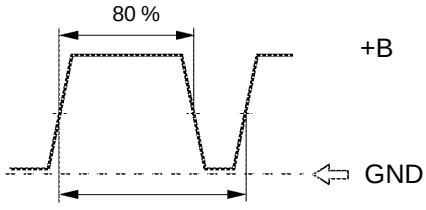	AI System: OFF (Air pump OFF, ASV OFF)	**P1613**	• AID • ECM
	AI System: ON (Air pump ON, ASV ON)	—	Normal
Excluding above (excluding 0, 20, 40, 80, 100 % duty)	—	**P1613**	• AID • Open in AID ground circuit

A23464

HINT:

- Using the AIR INJ CHECK operation of the SYSTEM CHECK provided in the hand−held tester function, conditions for air−fuel ratio and pressure in the secondary air injection system passage can be checked while the secondary air injection system operating. It helps technicians to troubleshoot the system when it malfunctioning.
- Read freeze frame data using a hand−held tester. Freeze frame data record the engine condition when malfunctions are detected. When troubleshooting, freeze frame data can help determine if the vehicle was moving or stationary, if the engine was warmed up or not, if the air−fuel ratio was lean or rich, and other data, from the time the malfunction occurred.

1	**Check any other DTCs output (In addition to air injection system DTCs).**

PREPARATION:

(a) Connect a hand−held tester to the DLC3.
(b) Turn the ignition switch to ON and turn the tester ON.
(c) Select the following menu items: DIAGNOSIS / ENHANCED OBD II / DTC INFO / CURRENT CODES.

CHECK:

(a) Read DTCs.

RESULT:

Display (DTC Output)	Proceed To
P1613	A
P1613 and other DTCs	B

HINT:

If any DTCs other than P1613 are output, troubleshoot those DTCs first.

B → **Go to DTC chart (See page DI−477).**

A

2	Check voltage between AIDI terminal of ECM and body ground.

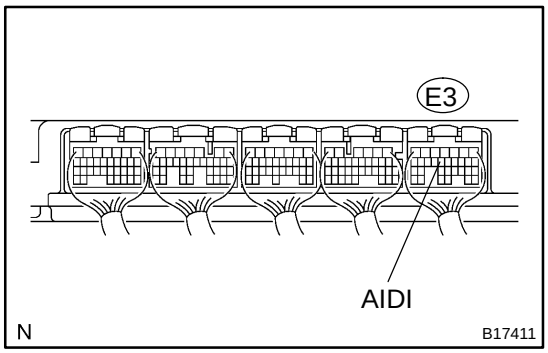

PREPARATION:

(a) Start the engine and warm it up.
(b) Turn the ignition switch to OFF.
(c) Connect a hand−held tester to the DLC3.
(d) Turn the ignition switch ON and turn the tester ON.
(e) Start the engine.
(f) Select the following menu items: DIAGNOSIS/ENHANCED OBD II/SYSTEM CHECK/AIR INJ CHECK/AUTOMATIC OPERATION

CHECK:

Measure voltage between terminal E3−13 (AIDI) of the ECM connector and body ground when the air injection system is ON and OFF.

RESULT:

Results	Suspected Trouble Areas	Proceed To
Fixed at Low (1.6 V or less) even when AI system ON (Air pump ON, ASV ON)	• Short between air pump or air switching valve command signal circuit and body ground • Open in air pump command signal circuit (between ECM and AID) • Open in ASV command signal circuit (between ECM and AID) • Open in AID ground circuit (between AID and body ground) • Diagnostic signal circuit ground short • AID • ECM	A
Fixed at High (12 V or more) even when AI system OFF (Air pump OFF, ASV OFF)	• Open in diagnostic signal circuit (ECM − AID) • Short between +B circuit and diagnostic signal circuit (ECM − AID) • Open in AID power source circuit • AID • ECM	B
Other than above: • Fluctuating (duty signal excluding 20, 40, 80%)	• AID • Open in AID ground circuit (between AID and body ground)	C

B	**Go to step 5.**
C	**Go to step 8.**

A

3	Check voltage between AIRP, AIRV terminals of ECM and body ground.

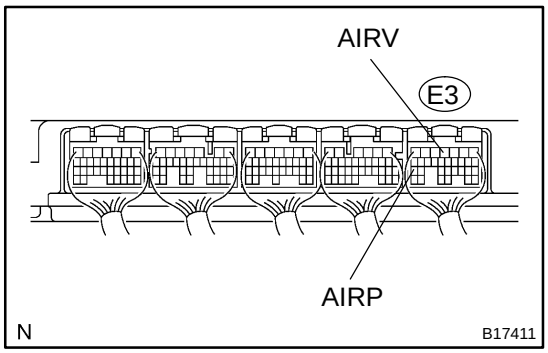

PREPARATION:
Turn the ignition switch ON.
CHECK:
Measure voltage between terminal E3−25 (AIRP), E3−4 (AIRV) of the ECM connector and body ground.
OK:

Tester Connection	Specified Condition
E3−25 (AIRP) − Body ground	10 V or more
E3−4 (AIRV) − Body ground	10 V or more

NG → **Replace ECM (See page SF−82).**

OK

4	Check for short in harness and connector between SIP terminal of air injection driver and SIRP of ECM.

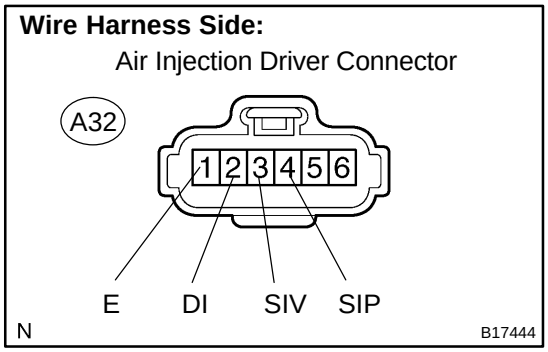

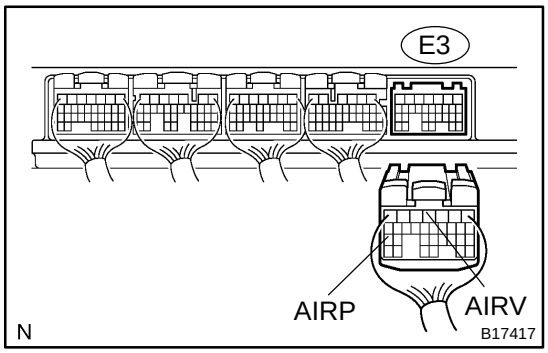

PREPARATION:
(a) Disconnect the A32 air injection driver connector.
(b) Disconnect the E3 ECM connector.
CHECK:
Measure the resistance between the wire harness side connectors.
OK:
Standard:

Tester Connection	Specified Condition
SIP (A32−4) or AIRP (E3−25) − Body ground	10 kΩ or higher
SIV (A32−3) or AIRV (E3−4) − Body ground	10 kΩ or higher
E (A32−1) − Body ground	Below 1 Ω

CHECK:
Measure the voltage between DI (A32−2) and E (A32−1) of the air injection driver wire harness side connectors.
OK:
Standard:

Tester Connection	Specified Condition
DI (A32−2) − E (A32−1)	9 V or more

NG → **Repair or replace harness or connector.**

OK

Replace air injection driver.

5	**Inspect air injection driver power source circuit.**

Wire Harness Side:
Air Injection Driver Connector

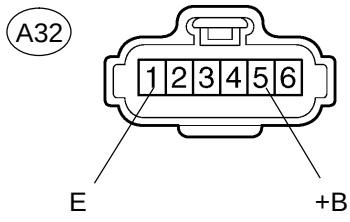

PREPARATION:
(a) Disconnect the A32 air injection driver connector.
(b) Turn the ignition switch to ON.

CHECK:
Measure the voltage between the terminal +B (A32−5) and E (A32−1) of the air injection driver connector.

OK:

Standard:

Tester Connection	Specified Condition
A32−5 (+B) − E (A32−1)	10 V or more

NG → **Repair or replace harness or connector.**

OK

6	**Check voltage between DI terminals of air injection driver and body ground.**

Wire Harness Side:
Air Injection Driver Connector

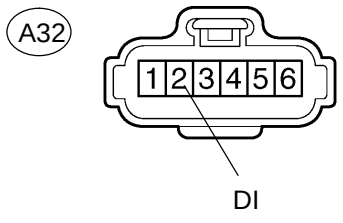

PREPARATION:
(a) Disconnect the A32 air injection driver connector.
(b) Turn the ignition switch to ON.

CHECK:
Measure the voltage between the terminal A32−2 (DI) of the air injection driver connector and body ground.

OK:

Standard:

Tester Connection	Specified Condition
A32−2 (DI) − Body ground	10 V or more

NG → **Go to step 7.**

OK

7	Check for short in harness and connector between DI terminal of air injection driver and AIDI terminal of ECM.

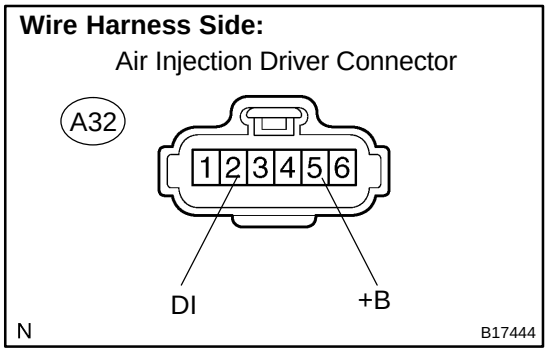

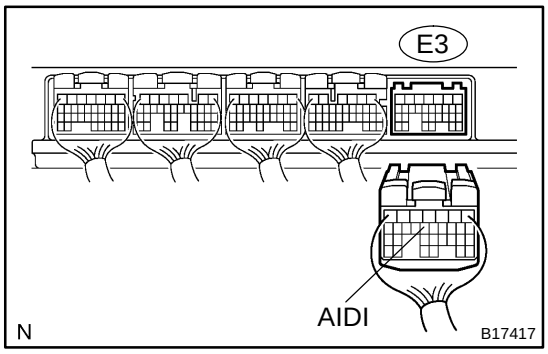

PREPARATION:

(a) Disconnect the A32 air injection driver connector.

(b) Disconnect the E3 ECM connector.

CHECK:

Measure the resistance between the wire harness side connectors.

OK:

Standard:

Tester Connection	Specified Condition
DI (A32−2) − AIDI (E3−13)	Below 1 Ω
DI (A32−2) or AIDI (E3−13) − +B (A32−5)	10 kΩ or higher

NG → **Repair or replace harness or connector.**

OK

Replace ECM (See page SF−82).

8	Inspect air injection driver ground circuit.

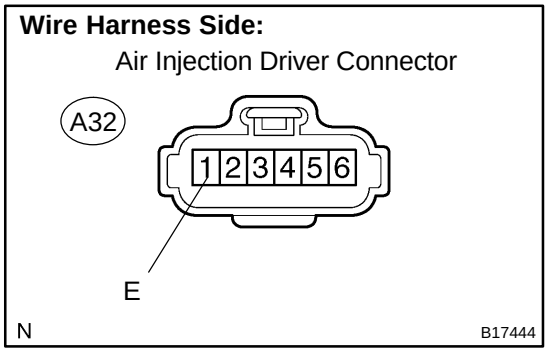

PREPARATION:

Disconnect the A32 air injection driver connector.

CHECK:

Measure the resistance between the terminal E (A32−1) of the air injection driver connector and body ground.

OK:

Standard:

Tester Connection	Specified Condition
E (A32−1) − Body ground	10 V or more

NG → **Repair or replace harness or connector.**

OK

9	**Replace air injection driver.**

NEXT

10	**Check whether DTC output recurs.**

PREPARATION:

(a) Connect a hand−held tester to the DLC3.
(b) Turn the ignition switch to ON and turn the tester ON.
(c) Clear the DTCs (see page DI−462).
(d) Start the engine.

CHECK:

(a) Perform ACTIVE TEST to operate the air injection system.
Select the following menu items: DIAGNOSIS/ENHANCED OBD II/SYSTEM CHECK/AIR INJ CHECK/AUTOMATIC OPERATION
(b) After operating the secondary air injection system, confirm the pending codes of the secondary air injection system by selecting the following menu items: DIAGNOSIS/ENHANCED OBD II/DTC INFO/PENDING CODES.

OK:

DTC P1613 for the secondary air injection system is not output.

NG → **Go to DTC chart (See page DI−462).**

OK

END

DIDS2−01

DTC	P2118	Throttle Actuator Control Motor Current Range/Performance

CIRCUIT DESCRIPTION

The Electronic Throttle Control System (ETCS) has a dedicated power supply circuit. The voltage (+BM) is monitored and when the voltage is low (less than 4V), the ECM concludes that the ETCS has a fault and current to the throttle control motor is cut.
When the voltage becomes unstable, the ETCS itself becomes unstable. For this reason, when the voltage is low, the current to the motor is cut. If repairs are made and the system has returned to normal, turn the ignition switch OFF. The ECM then allows current to flow to the motor and the motor can be restarted.
HINT:
This Electrical Throttle Control System (ETCS) does not use a throttle cable.

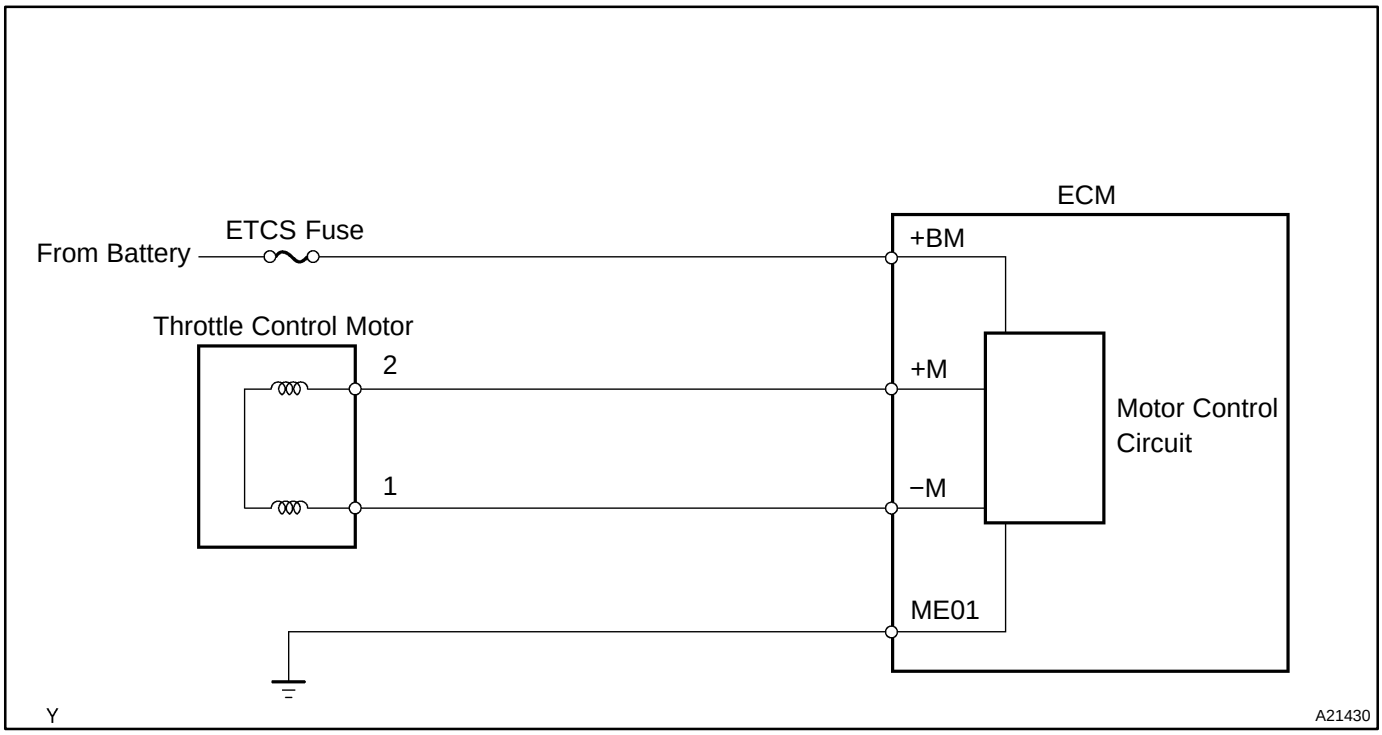

DTC No.	DTC Detection Condition	Trouble Area
P2118	Open in ETCS power source circuit (+BM)	• Open in ETCS power source circuit • ETCS fuse • ECM

MONITOR DESCRIPTION

The ECM monitors the battery supply voltage applied to the electronic throttle motor +BM. When the power supply voltage drops below the threshold, the ECM concludes that the power supply has an open circuit. The MIL is turned on and a DTC is set.

FAIL SAFE

If the ETCS (Electronic Throttle Control System) has a malfunction, the ECM cuts off current to the throttle control motor. The throttle control valve returns to a predetermined opening angle (approximately 16˚) by the force of the return spring. The ECM then adjusts the engine output by controlling the fuel infection (intermittent fuel−cut) and ignition timing in accordance with the accelerator pedal opening angle to enable the vehicle to continue at a minimum speed.
If the accelerator pedal is depressed firmly and slowly, the vehicle can be driven slowly.
If a ”pass” condition is detected and then the ignition switch is turned OFF, the fail−safe operation will stop and the system will return to normal condition.

MONITOR STRATEGY

Related DTCs	P2118	Throttle actuator motor power supply line range check (Low voltage)
Required sensors/components	Throttle actuator motor	
Frequency of operation	Continuous	
Duration	0.8 sec.	
MIL operation	Immediate	
Sequence of operation	None	

TYPICAL ENABLING CONDITIONS

Item	Specification	
	Minimum	Maximum
The monitor will run whenever this DTC is not present	See page DI−437	
Actuator power	ON	
Battery voltage	8 V	−

TYPICAL MALFUNCTION THRESHOLDS

Detection Criteria	Threshold
Throttle actuator motor power supply voltage	Less than 4 V

COMPONENT OPERATING RANGE

Parameter	Standard Value
Throttle actuator motor power supply voltage	9 to 14 V

WIRING DIAGRAM

Access Cab, Standard Cab:

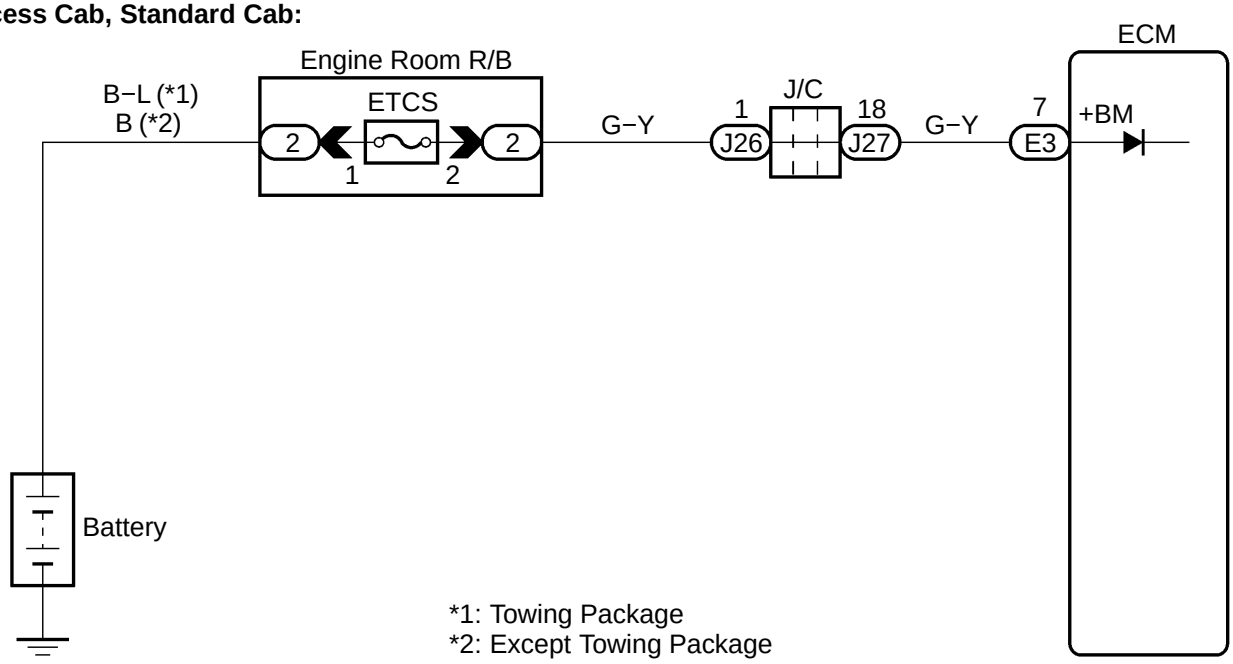

Double Cab:

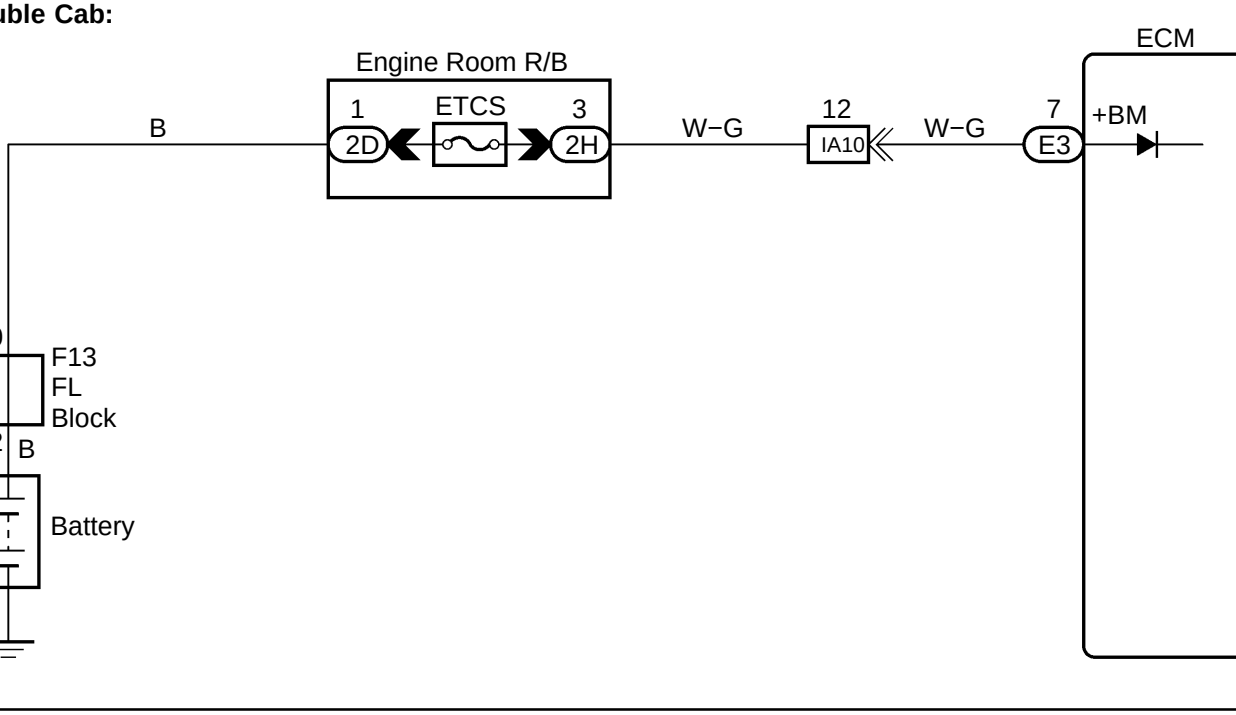

INSPECTION PROCEDURE

HINT:

Read freeze frame data using the hand−held tester. Freeze frame data records the engine conditions when a malfunction is detected. When troubleshooting, freeze frame data can help determine if the vehicle was running or stopped, if the engine was warmed up or not, if the air−fuel ratio was lean or rich, as well as other data from the time when a malfunction occurred.

1	**Check ETCS fuse.**

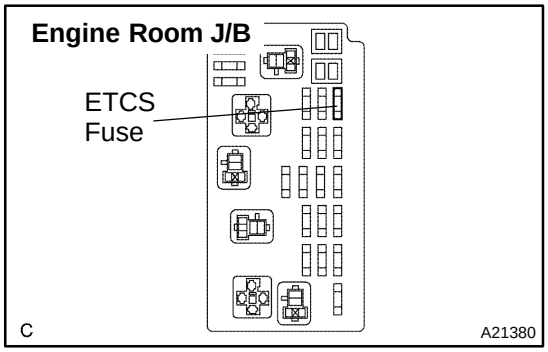

PREPARATION:

Remove the ETCS fuse from the engine room J/B.

CHECK:

Check the resistance of the ETCS fuse.

OK:

Below 1 Ω

NG → **Check for short in all harness and components connected to ETCS fuse.**

OK ↓

2	**Check voltage between terminal +BM and E1 of ECM connector.**

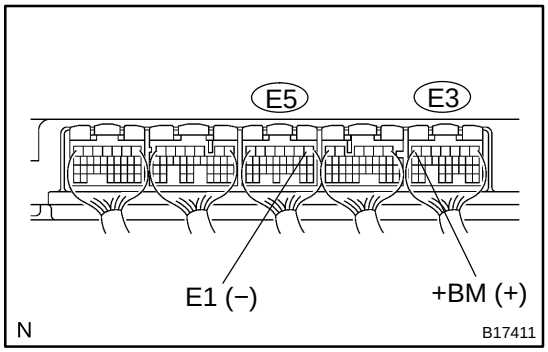

CHECK:

Measure the voltage between the specified terminals of the E5 and E3 ECM connector.

OK:

Standard:

Tester Connection	Specified Condition
+BM (E3−7) − E1 (E5−1)	9 to 14 V

C → **Check for intermittent problems (See page DI−430).**

NG ↓

3	**Check for open or short in harness or connector between battery and ETCS fuse, ETCS fuse and ECM.**

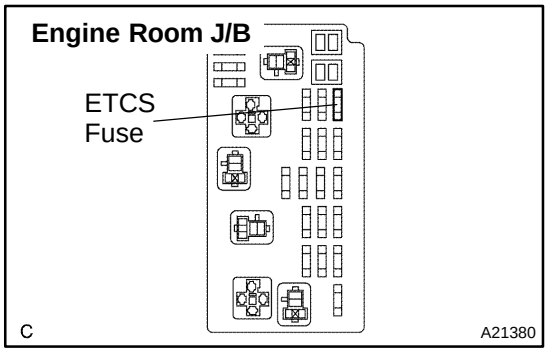

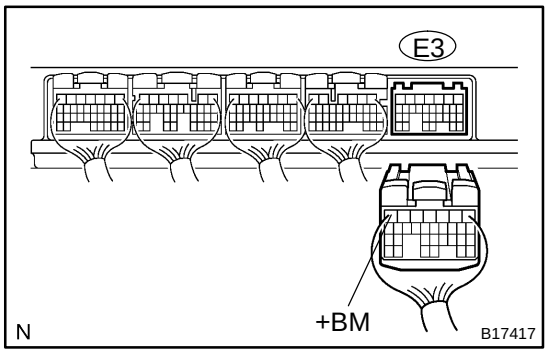

PREPARATION:

(a) Remove the ETCS fuse from the engine room J/B.

(b) Disconnect the E3 ECM connector.

CHECK:

Measure the resistance of the wire harness side connector between the ETCS fuse and ECM.

OK:

Standard:

Tester Connection	Specified Condition
Engine Room J/B (ETCS fuse terminal) − +BM (E3−7)	Below 1 Ω
Engine Room J/B (ETCS fuse terminal) or +BM (E3−7) − Body ground	10 kΩ or higher

PREPARATION:

(a) Remove the ETCS fuse from the engine room J/B.

(b) Disconnect the battery positive terminal.

CHECK:

Measure the resistance of the wire harness side connector between the ETCS fuse and battery.

OK:

Standard:

Tester Connection	Specified Condition
Engine Room J/B (ETCS fuse terminal) − Battery positive terminal	Below 1 Ω
Engine Room J/B (ETCS fuse terminal) or Battery positive terminal − Body ground	10 kΩ or higher

NG → **Repair or replace harness or connector.**

OK

Check engine room J/B.

DIDS3−01

DTC	P2119	Throttle Actuator Control Throttle Body Range Performance

CIRCUIT DESCRIPTION

The Electric Throttle Control System (ETCS) is composed of a throttle motor that operates the throttle valve, a throttle position sensor that detects the opening angle of the throttle valve, an accelerator pedal position sensor that detects the accelerator pedal position, and the ECM that controls the ETCS system.
The ECM operates the throttle motor to position the throttle valve for proper response to driver inputs. The throttle position sensor, mounted on the throttle body, detects the opening angle of the throttle valve and provides this signal to the ECM so that the ECM can regulate the throttle motor.

DTC No.	DTC Detection Condition	Trouble Area
P2119	Throttle opening angle continues to vary greatly from target throttle opening angle (1 trip detection logic)	• Electric throttle control system • Throttle body

MONITOR DESCRIPTION

The ECM determines the ”actual” throttle angle based on the throttle position sensor signal. The ”actual” throttle position is compared to the ”target” throttle position commanded by the ECM. If the difference of these two values exceeds a specified limit, the ECM interprets this as a fault in the ETCS (Electronic Throttle Control System). The ECM turns on the MIL and a DTC is set.

FAIL SAFE

If the ETCS (Electronic Throttle Control System) has a malfunction, the ECM cuts off current to the throttle control motor. The throttle control valve returns to a predetermined opening angle (approximately 16°) by the force of the return spring. The ECM then adjusts the engine output by controlling the fuel infection (intermittent fuel−cut) and ignition timing in accordance with the accelerator pedal opening angle to enable the vehicle to continue at a minimum speed.
If the accelerator pedal is depressed firmly and slowly, the vehicle can be driven slowly.
If a ”pass” condition is detected and then the ignition switch is turned OFF, the fail−safe operation will stop and the system will return to normal condition.

MONITOR STRATEGY

Related DTCs	P2119	Electronic throttle control system failure
Required sensors/components	Main sensors	Throttle actuator motor
	Related sensors	Throttle position sensor
Frequency of operation	Continuous	
Duration	1 sec.	
MIL operation	Immediate	
Sequence of operation	None	

TYPICAL ENABLING CONDITIONS

The monitor will run whenever this DTC is not present	See page DI−437	
System guard*	ON	
*System guard is ON when the following conditions are set:	−	
Throttle actuator	ON	
Throttle actuator duty calculation	Executing	
Throttle position sensor	Fail determined	
Throttle actuator current−cut operation	Not executing	
Throttle actuator power supply	4 V	−
Throttle actuator	Fail determined	

TYPICAL MALFUNCTION THRESHOLDS

Detection Criteria	Threshold
Either of the following conditions is met:	Condition (a) or (b)
(a) Commanded closed throttle position−current closed throttle position	0.3 V or more
(b) Commanded open throttle position−current open throttle position	0.3 V or more

COMPONENT OPERATING RANGE

Standard Value
Commanded throttle position and current throttle position are nearly the same

WIRING DIAGRAM

Refer to DTC P0120 on page DI−548.

INSPECTION PROCEDURE

HINT:

Read freeze frame data using the hand−held tester. Freeze frame data records the engine conditions when a malfunction is detected. When troubleshooting, freeze frame data can help determine if the vehicle was running or stopped, if the engine was warmed up or not, if the air−fuel ratio was lean or rich, as well as other data from the time when a malfunction occurred.

1	Are there any other codes (besides DTC P2119) being output?

PREPARATION:

(a) Connect the hand−held tester to the DLC3.
(b) Turn the ignition switch ON and push the hand−held tester main switch ON.
(c) When using hand−held tester, enter the following menu: DIAGNOSIS / ENHANCED OBD II / DTC INFO / CURRENT CODES.

CHECK:

Read the DTC using the hand−held tester.

RESULT:

Display (DTC Output)	Proceed to
P2119	A
”P2119” and other DTC	B

HINT:

If any other codes besides P2119 are output, perform the troubleshooting for those DTCs first.

B → **Go to DTC chart (See page DI−462).**

A

2	Check throttle control motor.

Component Side:
Throttle Control Motor and Sensor

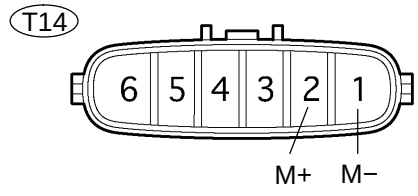

PREPARATION:

Disconnect the throttle control motor and sensor connector.

CHECK:

Measure the resistance between terminals of the throttle control motor.

OK:

Standard:

Tester Connection	Specified Condition
M+ (T14−2) − M− (T14−1)	0.3 to100 Ω (20°C (68°F))

NG → **Replace throttle body (See page SF−44).**

OK

3	**Replace ECM and check DTC (Check if DTC outputs reoccur).**

PREPARATION:

(a) Replace ECM.
(b) Clear DTCs (see page DI−462).
(c) Start and warm up the engine.
(d) Run the engine at idle for 15 seconds or more.

CHECK:

Read the DTC using the hand−held tester (See page DI−462).

OK:

No DTC output.

OK → **System is normal.**

NG

Replace throttle body (See page SF−44).

DICNF−02

DTC	P2121	Throttle/Pedal Position Sensor/Switch ”D” Circuit Range/Performance

HINT:
This is repair procedure for the ”accelerator pedal position sensor”.

CIRCUIT DESCRIPTION

Refer to DTC P2120 on page DI−794.

DTC No.	DTC Detecting Condition	Trouble Area
P2121	Conditions (a) and (b) continue for 0.5 seconds: (a) Difference between VPA and VPA2 exceeds the threshold (b) IDL is OFF	• Accelerator pedal position sensor circuit • Accelerator pedal position sensor • ECM

MONITOR DESCRIPTION

The accelerator pedal position sensor is mounted on the accelerator pedal bracket. The accelerator pedal position sensor has 2 sensor elements/signal outputs: VPA1 and VPA2. VPA1 is used to detect the actual accelerator pedal angle (used for engine control) and VPA2 is used to detect malfunctions in VPA1. When the difference between the voltage outputs of VPA1 and VPA2 deviates from the standard, the ECM concludes the accelerator pedal position sensor has a malfunction. The ECM turns on the MIL and a DTC is set.

FAIL SAFE

The accelerator pedal position sensor has two (main and sub) sensor circuits. If a malfunction occurs in either of the sensor circuits, the ECM detects the abnormal signal voltage difference between the two sensor circuits and switches to limp mode. In limp mode, the remaining circuit is used to calculate the accelerator pedal opening to allow the vehicle to continue driving.
If both circuits malfunction, the ECM regards the opening angle of the accelerator pedal to be fully closed. In this case, the throttle valve will remain closed as if the engine is idling.
If a ”pass” condition is detected and then the ignition switch is turned OFF, the fail−safe operation will stop and the system will return to normal condition.

MONITOR STRATEGY

Related DTCs	P2121	Accelerator position sensor (rationality)
Required sensors/components	Accelerator position sensor	
Frequency of operation	Continuous	
Duration	0.5 sec.	
MIL operation	Immediate	
Sequence of operation	None	

TYPICAL ENABLING CONDITIONS

Item	Specification	
	Minimum	Maximum
The monitor will run whenever this DTC is not present	See page DI−437	
Either of the following conditions is met	Condition 1 or 2	
1. Ignition switch	ON	
2. Throttle control motor power	ON	

TYPICAL MALFUNCTION THRESHOLDS

Detection Criteria	Threshold
Difference between VPA1 voltage (learned value) and VPA2 voltage (learned value)	Less than 0.4 V, or more than 1.2 V

WIRING DIAGRAM

Refer to DTC P2120 on page DI−794.

INSPECTION PROCEDURE

HINT:

Read freeze frame data using the hand−held tester. Freeze frame data records the engine conditions when a malfunction is detected. When troubleshooting, freeze frame data can help determine if the vehicle was running or stopped, if the engine was warmed up or not, if the air−fuel ratio was lean or rich, as well as other data from the time when a malfunction occurred.

1	**Connect hand−held tester, and read the voltage for accelerator pedal position sensor data.**

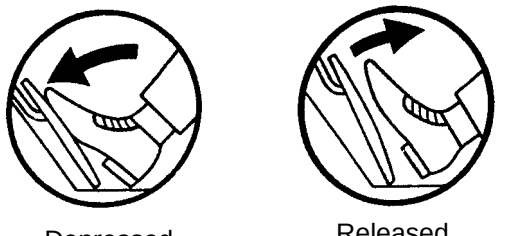

PREPARATION:

(a) Connect the hand−held tester to the DLC3.

(b) Turn the ignition switch ON and push the hand−held tester main switch ON.

(c) Enter the following menu: DIAGNOSIS / ENHANCED OBD II / DATA LIST / ETCS / ACCEL POS #1 and ACCEL POS #2.

CHECK:

Read the voltage for the accelerator pedal position sensor data.

OK:

Standard:

Accelerator pedal	ACCEL POS #1	ACCEL POS #2
Released	0.5 to 1.1 V	1.2 to 2.0 V
Depressed	2.6 to 4.5 V	3.4 to 5.3 V

OK → **Replace ECM (See page SF−82).**

NG

2	**Check for open and short in harness and connector between accelerator pedal position sensor and ECM.**

Wire Harness Side:
Accelerator Pedal Position Sensor

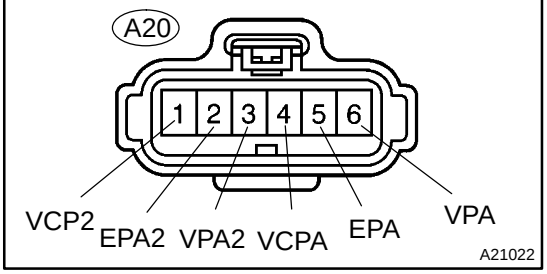

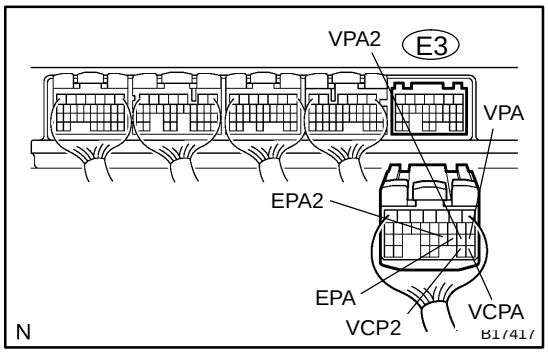

PREPARATION:

(a) Disconnect the A20 accelerator pedal position sensor connector.

(b) Disconnect the E3 ECM connector.

CHECK:

Measure the resistance between the wire harness side connectors.

OK:

Standard (Check for open):

Tester Connection	Specified Condition
VPA (A20−6) − VPA (E3−18)	Below 1 Ω
EPA (A20−5) − EPA (E3−20)	Below 1 Ω
VCPA (A20−4) − VCPA (E3−26)	Below 1 Ω
VPA2 (A20−3) − VPA2 (E3−19)	Below 1 Ω
EPA2 (A20−2) − EPA2 (E3−21)	Below 1 Ω
VCP2 (A20−1) − VCP2 (E3−27)	Below 1 Ω

Standard (Check for short):

Tester Connection	Specified Condition
VPA (A20−6) or VPA (E3−18) − Body ground	10 kΩ or higher
EPA (A20−5) or EPA (E3−20) − Body ground	10 kΩ or higher
VCPA (A20−4) or VCPA (E3−26) − Body ground	10 kΩ or higher
VPA2 (A20−3) or VPA2 (E3−19) − Body ground	10 kΩ or higher
EPA2 (A20−2) or EPA2 (E3−21) − Body ground	10 kΩ or higher
VCP2 (A20−1) or VCP2 (E3−27) − Body ground	10 kΩ or higher

NG → **Repair or replace harness or connector.**

OK

Replace accelerator pedal pedal assembly.

DIDS6−01

DTC	P2401	Evaporative Emission System Leak Detection Pump Control Circuit Low

DTC	P2402	Evaporative Emission System Leak Detection Pump Control Circuit High

CIRCUIT DESCRIPTION

Refer to EVAP Inspection Procedure (see page DI−884).

DTCs	Monitoring Item	DTC Detection Condition	Trouble Areas	Detection Timing	Detection Logic
P2401	Vacuum pump stuck OFF	One of following conditions are met: • 0.02 inch orifice low−flow • 0.02 inch orifice high−low • Vacuum pump ON stuck • Vacuum pump OFF stuck • Vent valve ON (Closed) stuck NOTE: P043E, P043F, P2401, P2402 and P2419 have same DTC detection conditions.	• Pump module • Connector / Wire harness (Pump module − ECM) • ECM	While ignition switch OFF	2 trips
P2402	Vacuum pump stuck ON				

WIRING DIAGRAM

Refer to EVAP Inspection Procedure (see page DI−884).

MONITOR DESCRIPTION

5 hours* after the ignition switch is turned OFF, the electric vacuum pump creates negative pressure (vacuum) in the EVAP (Evaporative Emission) system. The ECM monitors for leaks and actuator malfunctions based on the EVAP pressure.

HINT:

*: If the engine coolant temperature is not below 35°C (95°F) 5 hours after the ignition switch is turned off, the monitor check starts 2 hours later. If it is still not below 35°C (95°F) 7 hours after the ignition switch is turned off, the monitor check starts 2.5 hours later.

Sequence	Operations	Descriptions	Duration
−	ECM activation	Activated by soak timer, 5 hours (7 or 9.5 hours) after ignition switch turned to OFF.	−
A	Atmospheric pressure measurement	Vent valve turned OFF (vent) and EVAP system pressure measured by ECM in order to register atmospheric pressure. If EVAP pressure is not between 70 kPa and 110 kPa (525 mmHg and 825 mmHg), ECM cancels EVAP system monitor.	10 seconds
B	First 0.02 inch leak pressure measurement	In order to determine 0.02 inch leak pressure standard, vacuum pump creates negative pressure (vacuum) through 0.02 inch orifice and then ECM checks if vacuum pump and vent valve operate normally.	60 seconds
C	EVAP system pressure measurement	Vent valve turned ON (closed) to shut EVAP system. Negative pressure (vacuum) created in EVAP system, and EVAP system pressure then measured. Write down the measured value as it will be used in the leak check. If EVAP pressure does not stabilize within 15 minutes, ECM cancels EVAP system monitor.	15 minutes*
D	Purge VSV monitor	Purge VSV opened and then EVAP system pressure measured by ECM. Large increase indicates normal.	10 seconds
E	Second 0.02 inch leak pressure measurement	Leak check is performed after second 0.02 inch leak pressure standard is measured. If stabilized system pressure higher than second 0.02 inch leak pressure standard, ECM determines that EVAP system leaking.	60 seconds
F	Final check	Atmospheric pressure measured and then monitoring result recorded by ECM.	−

* If only a small amount of fuel is in the fuel tank, it takes longer for the EVAP pressure to stabilize.

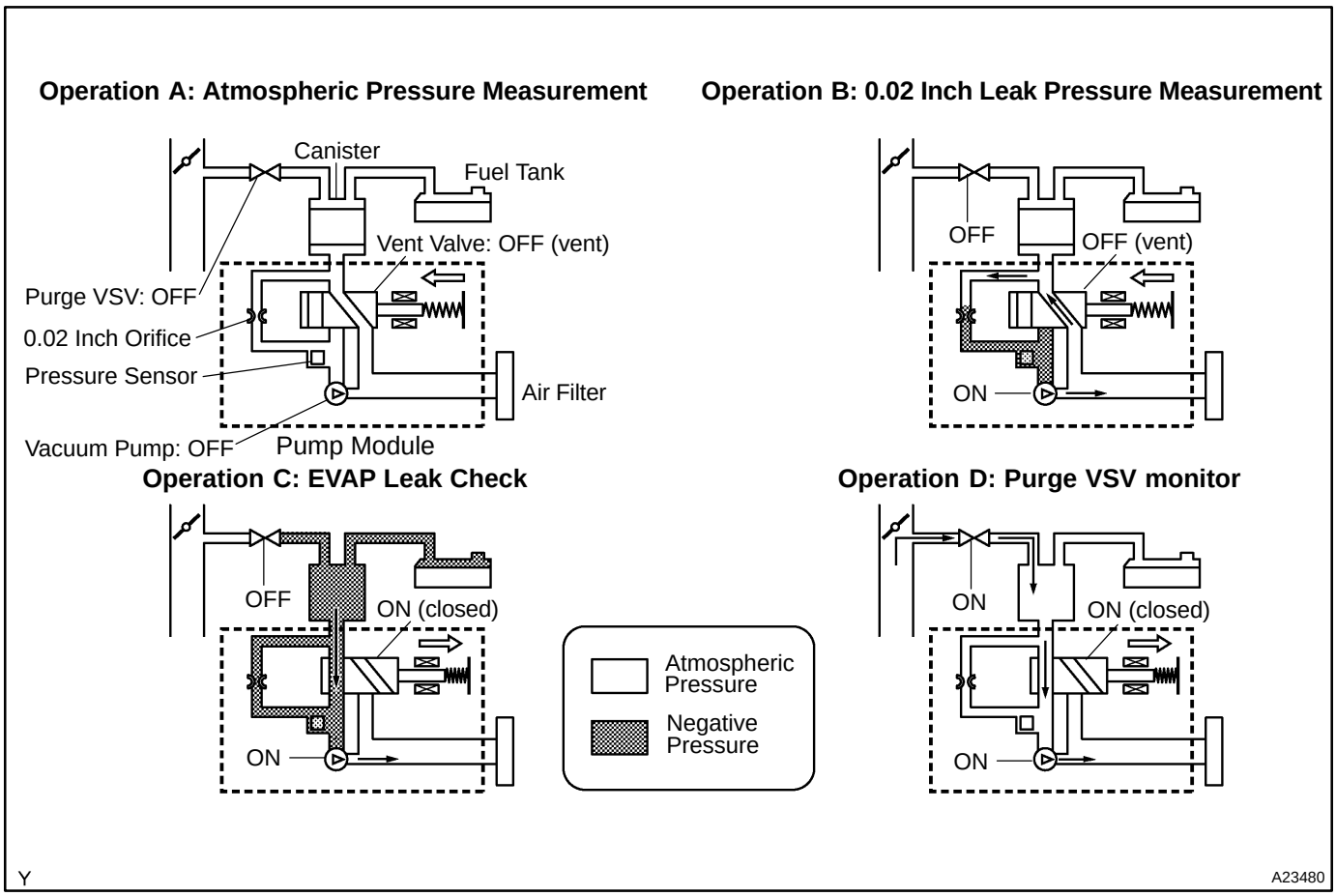

In sequence B and E, to determine the leak criterion, the vacuum pump creates negative pressure in the canister pump module through the 0.02 inch orifice. If the pressure is out of specified range or is not saturated, the ECM illuminates the MIL and sets DTCs P043E, P043F, P2401, P2402 and P2419 (2−trip detection logic).

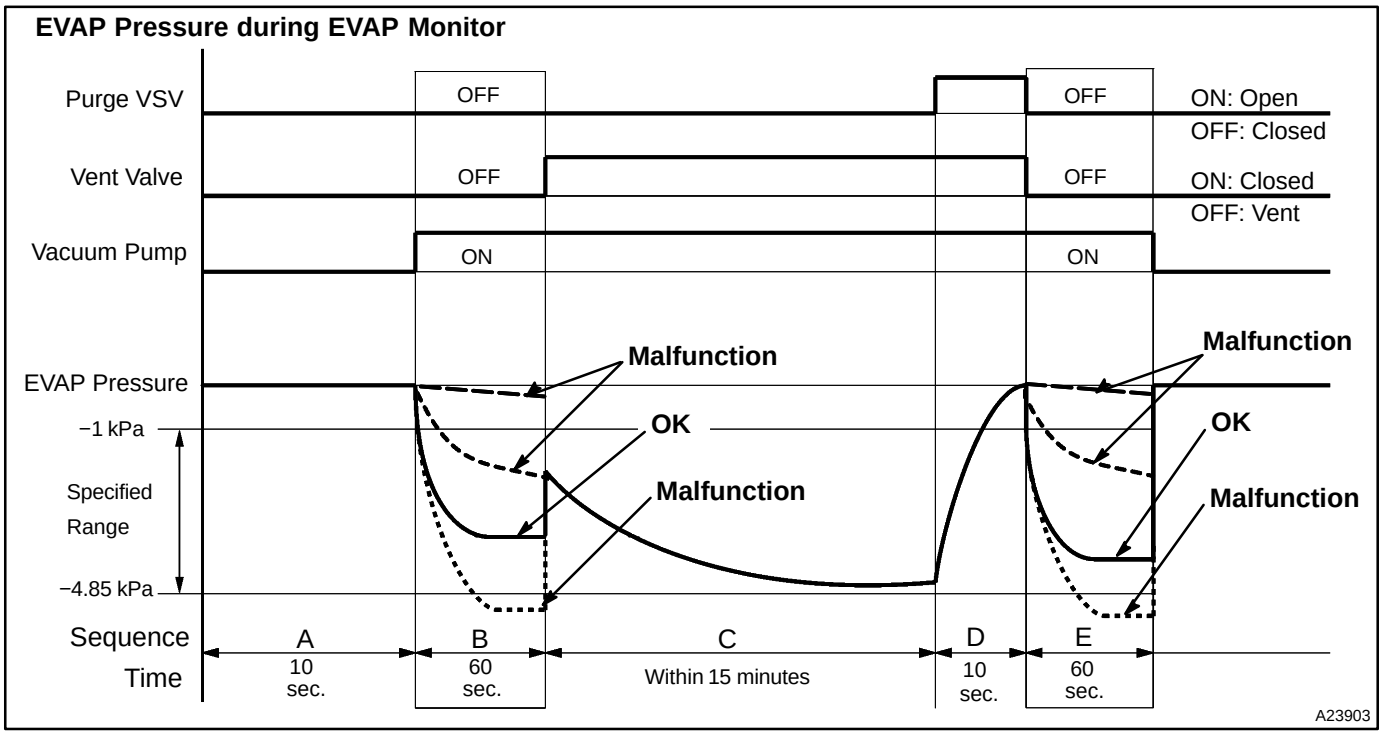

MONITOR STRATEGY

Related DTCs	P2401	Vacuum pump stuck OFF
	P2402	Vacuum pump stuck ON
Required sensors/components	Purge VSV and pump module	
Frequency of operation	Once per driving cycles	
Duration	Within 2 minutes (varies with amount of fuel in tank)	
MIL operation	2 driving cycles	
Sequence of operation	None	

TYPICAL ENABLING CONDITIONS

Item	Specification	
	Minimum	Maximum
The monitor will run whenever these DTCs are not present	See page DI−437	
Atmospheric pressure	70 to 110 kPa (525 to 825 mmHg)	
Battery voltage	10.5 V	−
Vehicle speed	−	2.5 mph (4 km/h)
Ignition switch	OFF	
Time after key off	5 or 7 or 9.5 hours	
EVAP pressure sensor malfunction (P0450, P0452, P0453)	Not detected	
EVAP canister purge valve	Not operated by scan tool	
EVAP canister vent valve	Not operated by scan tool	
EVAP leak detection pump	Not operated by scan tool	
Both of the following conditions 1 and 2 set before key off	−	
1. Duration that vehicle has been driven	5 min.	−
2. EVAP purge operation	Performed	
ECT	4.4 to 35°C (40 to 95°F)	
IAT	4.4 to 35°C (40 to 95°F)	
Key−off monitor sequence	1 to 8	
1. Atmospheric pressure	−	
Next sequence is run if the following condition is set	−	
Atmospheric pressure change	−	0.3 kPa (2.25 mmHg)
2. First reference pressure measurement	−	
Next sequence is run if the following conditions are set	Condition 1, 2 and 3	
1. EVAP pressure just after reference pressure measurement start	−	−1 kPa (−7.5 mmHg)
2. Reference pressure	−4.85 to −1.057 kPa (−36.38 to −7.93 mmHg)	
3. Reference pressure	Saturated within 60 seconds	

3. EVAP canister vent valve close stuck check	−	
Next sequence is run if the following condition is set	−	
EVAP pressure change after vent valve is ON	0.3 kPa (2.25 mmHg)	−
4. Vacuum introduction	−	
Next sequence is run if the following condition is set	−	
EVAP pressure	Saturated within 15 minutes	
5. EVAP canister purge valve close stuck check	−	
Next sequence is run if the following condition is set	−	
EVAP pressure change after purge valve is open	0.3 kPa (2.25 mmHg)	−
6. Second reference pressure measurement	−	
Next sequence is run if the following conditions are set	Condition 1, 2, 3 and 4	
1. EVAP pressure just after reference pressure	−	−1 kPa (−7.5 mmHg)
2. Reference pressure	−4.85 to −1.057 kPa (−36.38 to −7.93 mmHg)	
3. Reference pressure	Saturated within 60 seconds	
4. Difference between first reference pressure and second reference pressure	−	0.7 kPa (5.25 mmHg)
7. Leak check	−	
Next sequence is run if the following condition is set	−	
EVAP pressure when vacuum introduction is complete	−	Second reference pressure
8. Atmospheric pressure measurement	−	
EVAP monitor is complete if the following condition is set	−	
Atmospheric pressure difference between sequence 1 and 8	−	0.3 kPa (2.25 mmHg)

TYPICAL MALFUNCTION THRESHOLDS

Detection Criteria	Threshold
One of the following conditions is set:	Condition 1, 2, 3, 4 or 5
1. EVAP pressure just after reference pressure measurement start	More than −1 kPa (−7.5 mmHg)
2. Reference pressure	Less than −4.85 kPa (−36.38 mmHg)
3. Reference pressure	−1.057 kPa (−7.93 mmHg) or more
4. Reference pressure	Not saturated
5. Difference between first reference pressure and second reference pressure	5.25 mmHg (0.7 kPa) or more

MONITOR RESULT (MODE 06 DATA)

Refer to page DI−445 for detailed information.

INSPECTION PROCEDURE

Refer to the EVAP Inspection Procedure (see page DI−884).

DIDS7−01

DTC	P2419	Evaporate Emission System Switching Valve Control Circuit Low

DTC	P2420	Evaporate Emission System Switching Valve Control Circuit High

CIRCUIT DESCRIPTION

Refer to the EVAP Inspection Procedure (see page DI−884).

DTCs	Monitoring Item	DTC Detection Conditions	Trouble Areas	Detection Timing	Detection Logic
P2419	Vent valve stuck ON (Closed)	One of following conditions are met: • 0.02 inch orifice low−flow • 0.02 inch orifice high−flow • Vacuum pump ON stuck • Vacuum pump OFF stuck • Vent valve ON (Closed) stuck NOTE: P043E, P043F, P2401, P2402 and P2419 have same DTC detection conditions.	• Pump module • Connector/Wire harness (Pump module − ECM) • ECM	While Ignition switch OFF	2 trips
P2420	Vent valve stuck OFF (Vent)	Vent valve OFF (Vent) stuck			

WIRING DIAGRAM

Refer to the EVAP Inspection Procedure (see page DI−884).

MONITOR DESCRIPTION

5 hours* after the ignition switch is turned OFF, the electric vacuum pump creates negative pressure (vacuum) in the EVAP (Evaporative Emission) system. The ECM monitors for leaks and actuator malfunctions based on the EVAP pressure.

HINT:

*: If the engine coolant temperature is not below 35°C (95°F) 5 hours after the ignition switch is turned off, the monitor check starts 2 hours later. If it is still not below 35°C (95°F) 7 hours after the ignition switch is turned off, the monitor check starts 2.5 hours later.

Sequence	Operations	Descriptions	Duration
−	ECM activation	Activated by soak timer, 5 hours (7 or 9.5 hours) after ignition switch turned to OFF.	−
A	Atmospheric pressure measurement	Vent valve turned OFF (vent) and EVAP system pressure measured by ECM in order to register atmospheric pressure. If EVAP pressure is not between 70 kPa and 110 kPa (525 mmHg and 825 mmHg), ECM cancels EVAP system monitor.	10 seconds
B	First 0.02 inch leak pressure measurement	In order to determine 0.02 inch leak pressure standard, vacuum pump creates negative pressure (vacuum) through 0.02 inch orifice and them ECM checks if vacuum pump and vent valve operate normally.	60 seconds
C	EVAP system pressure measurement	Vent valve turned ON (closed) to shut EVAP system. Negative pressure (vacuum) created in EVAP system, and EVAP system pressure then measured. Write down the measured value as it will be used in the leak check. If EVAP pressure does not stabilize within 15 minutes, ECM cancels EVAP system monitor.	15 minutes*
D	Purge VSV monitor	Purge VSV opened and then EVAP system pressure measured by ECM. Large increase indicates normal.	10 seconds
E	Second 0.02 inch leak pressure measurement	Leak check is performed after second 0.02 inch leak pressure standard is measured. If stabilized system pressure higher than second 0.02 inch leak pressure standard, ECM determines that EVAP system leaking.	60 seconds
F	Final check	Atmospheric pressure measured and then monitoring result recorded by ECM.	−

* If only a small amount of fuel is in the fuel tank, it takes longer for the EVAP pressure to stabilize.

Operation A: Atmospheric Pressure Measurement

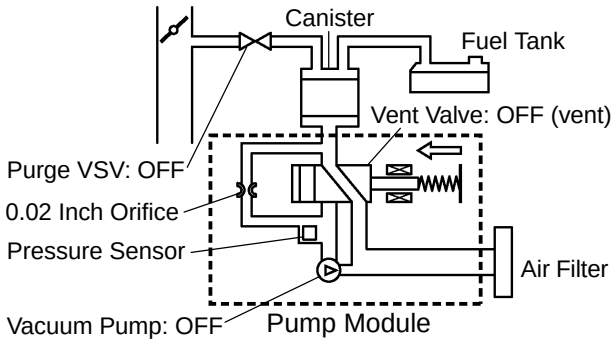

Operation B: 0.02 Inch Leak Pressure Measurement

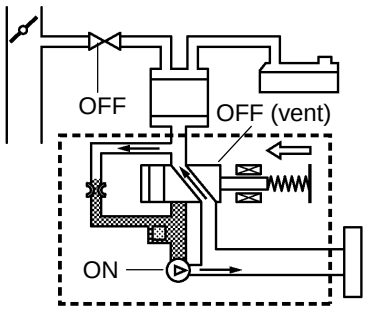

Operation C: EVAP Leak Check

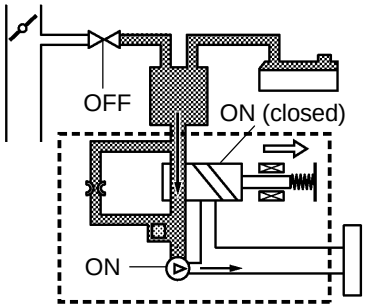

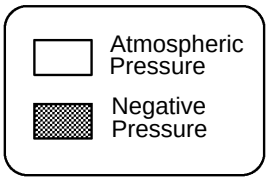

Operation D: Purge VSV monitor

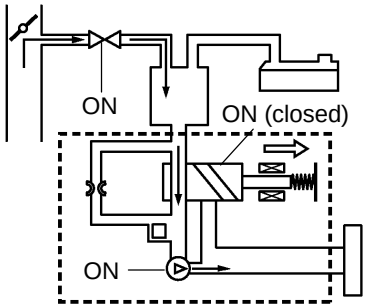

Y

A23480

(a) P2419: Vent valve stuck ON (Closed)
In sequence B and E, to determine the leak criterion, the vacuum pump creates negative pressure in the canister pump module through the 0.02 inch orifice. If the pressure is out of specified range or is not saturated, the ECM illuminates the MIL and sets DTCs P043E, P043F, P2401, P2402 and P2419 (2−trip detection logic).

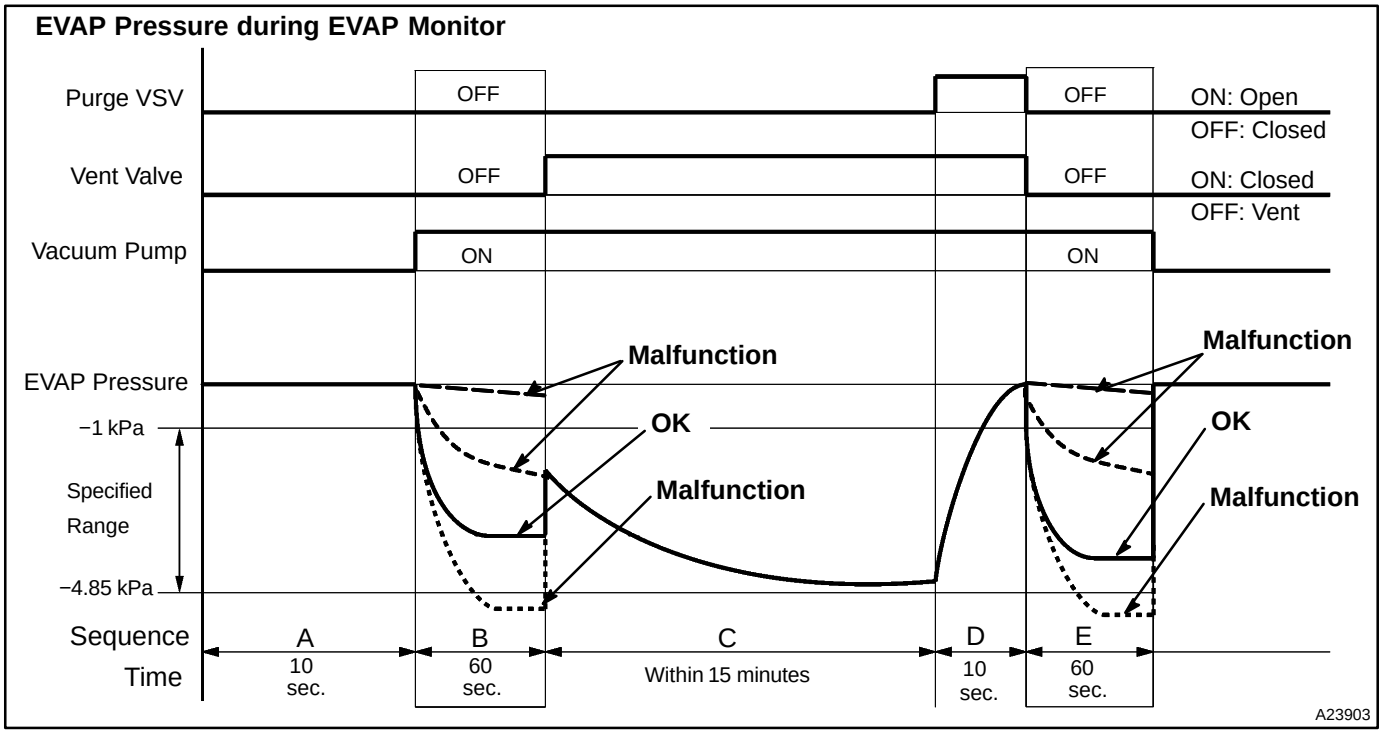

(b) P2420: Vent valve stuck OFF (vent)

In sequence C, the vent valve turns ON (closes) and the EVAP (Evaporative Emission) system pressure is then measured by the ECM, using the pressure sensor, to conduct an EVAP leak check. If the pressure does not increase when the vent valve turned ON (closed), the ECM interprets this as the vent valve being stuck OFF (vent). The ECM illuminates the MIL and sets the DTC.

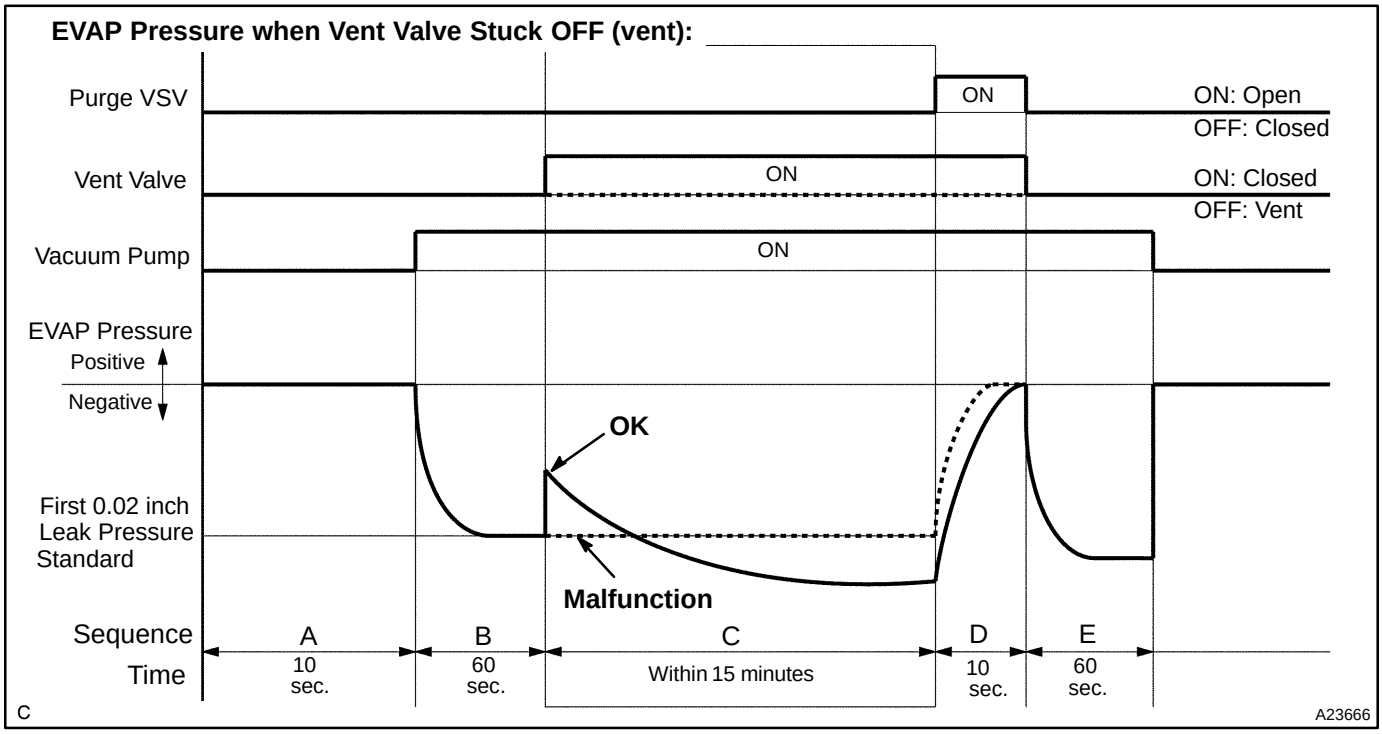

MONITOR STRATEGY

Related DTCs	P2419	Vent valve stuck open
	P2420	Vent valve stuck closed
Required sensors/components	Vent valve	
Frequency of operation	Once per driving cycle	
Duration	Within 2 minutes (varies with amount of fuel in tank)	
MIL operation	2 driving cycles	
Sequence of operation	None	

TYPICAL ENABLING CONDITIONS

Item	Specification	
	Minimum	Maximum
The monitor will run whenever these DTCs are not present	See page DI−437	
Atmospheric pressure	70 to 110 kPa (525 to 825 mmHg)	
Battery voltage	10.5 V	−
Vehicle speed	−	2.5 mph (4 km/h)
Ignition switch	OFF	
Time after key off	5 or 7 or 9.5 hours	
EVAP pressure sensor malfunction (P0450, P0452, P0453)	Not detected	
EVAP canister purge valve	Not operated by scan tool	
EVAP canister vent valve	Not operated by scan tool	

EVAP leak detection pump	Not operated by scan tool	
Both of the following conditions 1 and 2 set before key off	−	
1. Duration that vehicle has been driven	5 min.	−
2. EVAP purge operation	Performed	
ECT	4.4 to 35°C (40 to 95°F)	
IAT	4.4 to 35°C (40 to 95°F)	
Key−off monitor sequence	1 to 8	
1. Atmospheric pressure	−	
Next sequence is run if the following condition is set	−	
Atmospheric pressure change	−	0.3 kPa (2.25 mmHg)
2. First reference pressure measurement	−	
Next sequence is run if the following conditions are set	Condition 1, 2 and 3	
1. EVAP pressure just after reference pressure measurement start	−	−1 kPa (−7.5 mmHg)
2. Reference pressure	−4.85 to −1.057 kPa (−36.38 to −7.93 mmHg)	
3. Reference pressure	Saturated within 60 seconds	
3. EVAP canister vent valve close stuck check	−	
Next sequence is run if the following condition is set	−	
EVAP pressure change after vent valve is ON	0.3 kPa (2.25 mmHg)	−
4. Vacuum introduction	−	
Next sequence is run if the following condition is set	−	
EVAP pressure	Saturated within 15 minutes	
5. EVAP canister purge valve close stuck check	−	
Next sequence is run if the following condition is set	−	
EVAP pressure change after purge valve is open	0.3 kPa (2.25 mmHg)	−
6. Second reference pressure measurement	−	
Next sequence is run if the following conditions are set	Condition 1, 2, 3 and 4	
1. EVAP pressure just after reference pressure	−	−1 kPa (−7.5 mmHg)
2. Reference pressure	−4.85 to −1.057 kPa (−36.38 to −7.93 mmHg)	
3. Reference pressure	Saturated within 60 seconds	
4. Difference between first reference pressure and second reference pressure	−	0.7 kPa (5.25 mmHg)

7. Leak check	−	
Next sequence is run if the following condition is set	−	
EVAP pressure when vacuum introduction is complete	−	Second reference pressure
8. Atmospheric pressure measurement	−	
EVAP monitor is complete if the following condition is set	−	
Atmospheric pressure difference between sequence 1 and 8	−	0.3 kPa (2.25 mmHg)

TYPICAL MALFUNCTION THRESHOLDS

Detection Criteria	Threshold
Vent valve stuck open:	
One of the following conditions set	Condition 1, 2, 3, 4 or 5
1. EVAP pressure just after reference pressure measurement start	More than −1 kPa (−7.5 mmHg)
2. Reference pressure	Less than −4.85 kPa (−36.38 mmHg)
3. Reference pressure	−1.057 kPa (−7.93 mmHg) or more
4. Reference pressure	Not saturated
5. Difference between first reference pressure and second reference pressure	0.7 kPa (5.25 mmHg) or more
Vent valve stuck closed:	
EVAP pressure change after EVAP canister vent valve is ON	Less than 0.3 kPa (2.25 mmHg)

MONITOR RESULT (MODE 06 DATA)

Refer to page DI−445 for detailed information.

INSPECTION PROCEDURE

Refer to the EVAP Inspection Procedure (see page DI−884).

DIDS9−01

DTC	P2444	Secondary Air Injection System Pump Stuck On Bank 1

DTC	P2445	Secondary Air Injection System Pump Stuck Off Bank 1

CIRCUIT DESCRIPTION

Refer to DTC P0412 on page DI−656.

DTC No.	DTC Detection Condition	Trouble Area
P2444	**Air pump stack ON.** The secondary air pressure is more than 2.5 kPa (19 mmHg) despite the ECM ordering the air pump to turn off. (2 trip detection logic)	• Short in air pump circuit • Air injection driver • Pressure sensor • Open or short in pressure sensor circuit • ECM
P2445	**Air pump stuck OFF or air injection volume is insufficient.** The amount of air flow is below the criteria. (The secondary air pressure is less than specified value despite the ECM ordering the air pump turn ON.) (2 trip detection logic)	• Air pump fuse • Vacuum hose • Air pump assembly • Air injection driver • Open in air pump circuit • Air injection system piping • Pressure sensor • Open or short in pressure sensor circuit • ECM

MONITOR DESCRIPTION

P2444:

The ECM observes the pressure in the secondary air passage using the pressure sensor located on the air switching valve in the secondary air injection system. The sensor measures the pressure in the secondary air passage and sends a signal to the ECM.

If the pressure level from the sensor exceed a certain level despite the ECM turning off the air pump, the ECM interprets this as a fault in the secondary air injection system and sets a DTC.

P2445:

The ECM calculates the amount of air flow within the secondary air system based on the output values of the pressure sensor and Mas air flow meter.

The ECM determines whether the amount of air flow is normal or not according to the calculated value. When the amount of air flow is below the criteria the ECM stores the DTC and illuminates the MIL.

MONITOR STRATEGY

Related DTCs	P2444	Air pump is stuck ON (case 1)
	P2445	Air pump is stuck OFF (case 2)
	P2445	Air flow volume is insufficient (case 3)
	P2445	Air pressure sensor is stuck (case 4)
Required sensors/components	AIR pressure sensor, AIR valve, AIR VSV (Bank 1), AIR VSV (Bank 2)	
Frequency of operation	Once per driving cycle	
Duration	Within 60 seconds	
MIL operation	2 driving cycles	
Sequence of operation	None	

TYPICAL ENABLING CONDITIONS

Item	Specification	
	Minimum	Maximum
The monitor will run whenever these DTCs are not present	See page DI−437	
Conditions for case 1, case 2 and case 3:		
Atmospheric pressure	45 kPa (338 mmHg)	−
Battery voltage	11.5 V	−
Sequence 1 to 6 are performed to monitor AIR	−	
Sequence 1	−	
AIR	In operation	
AIR pump	ON	
AIR valve (Electric type)	ON	
Either of the following conditions is met:	Condition 1 or 2	
1. Both of the following conditions are met:	Condition (a) and (b)	
(a) AIR valve (vacuum type) bank 1	ON	
(b) AIR valve (vacuum type) bank 2	OFF	
2. Both of the following conditions are met:	Condition (c) and (d)	
(c) AIR valve (vacuum type) bank 1	OFF	
(d) AIR valve (vacuum type) bank 2	ON	
Idle	ON	
Sequence 2	−	
AIR valve (Electric type)	ON	
AIR valve (vacuum type) bank 1	ON	
AIR valve (vacuum type) bank 2	ON	
Idle	ON	
Sequence 3	−	
AIR pump	ON	
AIR valve (Electric type)	ON	
AIR valve (vacuum type) bank 1	ON	
AIR valve (vacuum type) bank 2	ON	
Engine RPM	−	3750 rpm
Sequence 4 (This sequence is run when AIR pressure is no change at monitor)	−	

AIR	Not operating	
AIR pump	ON	
AIR valve (Electric type)	ON	
Either of the following conditions is met:	Condition 1 or 2	
1. Both of the following conditions are met:	Condition (a) and (b)	
(a) AIR valve (vacuum type) bank 1	ON	
(b) AIR valve (vacuum type) bank 2	OFF	
2. Both of the following conditions are met:	Condition (c) and (d)	
(c) AIR valve (vacuum type) bank 1	OFF	
(d) AIR valve (vacuum type) bank 2	ON	
Engine RPM	−	3750 rpm
Sequence 5	−	
AIR	Not operating	
AIR pump	OFF	
AIR valve (Electric type)	OFF	
AIR valve (vacuum type) bank 1	OFF	
AIR valve (vacuum type) bank 2	OFF	
Engine RPM	−	3750 rpm
Sequence 6	−	
AIR status	Not operating	
AIR pump	OFF	
AIR valve (Electric type)	ON	
AIR valve (vacuum type) bank 1	OFF	
AIR valve (vacuum type) bank 2	OFF	
Engine RPM	−	3750 rpm
Conditions for case 4:		
ECT at engine start	−	5°C (41°F)
IAT at engine start	−15°C (5°F)	−
Time after ECT is 80°C (176°F) or more	10 to 60 minutes	
Cumulative intake air amount	172 g/sec.	−
Monitor sequence 3 (during AIR: ON)	Completed	
One of the following condition is met:	Condition (a), (b) or (c)	
(a) Vehicle speed	49.7 mph (80 km/h)	−
(b) Engine RPM	0 rpm	−
(c) Throttle position	0 deg	−
AIR valve	OFF	
AIR VSV bank 1	OFF	
AIR VSV bank 2	OFF	
AIR pressure sensor malfunction (open circuit, out of range)	Not detected	

TYPICAL MALFUNCTION THRESHOLDS

Detection Criteria	Threshold
Thresholds for case 1	
AIR pressure during monitor sequence 6	5 kPa (37.5 mmHg) or more
Thresholds for case 2	
AIR pressure during monitor sequence 3	Less than 1 kPa (7.5 mmHg)
Thresholds for case 3	
AIR amount	100 L/min. or less
Thresholds for case 4	
AIR pressure change	5 kPa (37.5 mmHg) or more

MONITOR RESULT

Refer to page DI−445 for detailed information.

The test value and test limit information are described as shown in the following table. Check the monitor result and test values after performing the monitor drive pattern (refer to ”Confirmation Monitor”).

- MID (Monitor Identification Data) is assigned to each emissions−related component.
- TID (Test Identification Data) is assigned to each test value.
- Scaling is used to calculate the test value indicated on generic OBD ll scan tools.

Secondary air injection (AIR) system

MID	TID	Scaling	Description of Test Value	Minimum Test Limit	Maximum Test Limit
$71	$E1	Multiply by 0.01 (g/s)	Test value of AIR amount insufficient	Minimum test limit	Maximum test limit
$71	$E2	Multiply by 0.01 (kPa)	Test value of AIR pump stuck ON	Minimum test limit	Maximum test limit
$71	$E3	Multiply by 0.01 (kPa)	Test value of AIR pump stuck OFF	Minimum test limit	Maximum test limit
$71	$E4	Multiply by 0.01 (kPa)	Test value of AIR control valve ON	Minimum test limit	Maximum test limit
$71	$E5	Multiply by 0.01 (kPa)	Test value of AIR control valve OFF	Minimum test limit	Maximum test limit
$71	$E6	Multiply by 0.01 (kPa)	Test value of AIR pressure change for AIR valve	Minimum test limit	Maximum test limit
$71	$E7	Multiply by 0.01 (kPa)	Test value of AIR pressure change for AIR VSV bank 1	Minimum test limit	Maximum test limit
$71	$E8	Multiply by 0.01 (kPa)	Test value of AIR pressure change for AIR VSV bank 2	Minimum test limit	Maximum test limit
$71	$E9	Multiply by 0.01 (kPa)	Test value of AIR pressure pulsation for AIR VSV when AIR pressure is low	Minimum test limit	Maximum test limit

WIRING DIAGRAM

Refer to DTC P0412 on page DI−656.

INSPECTION PROCEDURE

HINT:

To check the pressure condition in the secondary air passage, the hand−held tester is available.

1	**Is the DTC P2444 and P2445 being output.**

PREPARATION:

(a) Connect the hand−held tester to the DLC3.
(b) Turn the ignition switch ON and push the hand−held tester main switch ON.
(c) Enter the following menu: DIAGNOSIS/ENHANCED OBD II/DTC INFO/CURRENT CODES.

CHECK:

Read the DTCs.

RESULT:

Display (DTC output)	Proceed to
P2445	A
P2444	B
P2444 and P2445	B
”P2444 and P2445” and other DTCs	C

HINT:

If any other codes besides P2444 or P2445 is output, perform the troubleshooting for those DTCs first.

B	**Go to step 7.**
C	**Go to DTC chart (See page DI−462).**

A

2	Check air injection system pressure.

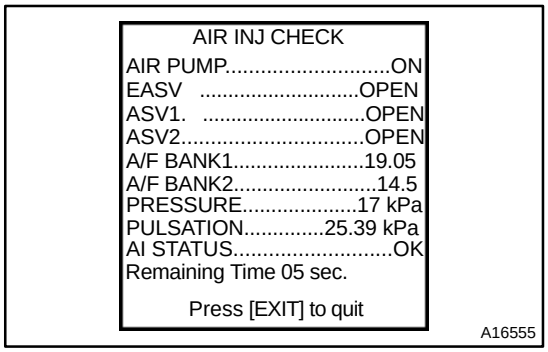

PREPARATION:

(a) Start the engine and warm it up.
(b) Turn the ignition switch to OFF.
(c) Connect the hand−held tester to the DLC3.
(d) Turn the ignition switch to ON and push the hand−held tester main switch ON.
(e) Start the engine.

CHECK:

(a) Select the following menu items: DIAGNOSIS/ENHANCED OBD II/SYSTEM CHECK/ AIR INJ CHECK/ MANUAL OPERATION/OPERATION 1 and 6

HINT:

OPERATION 1: AP:OFF, EASV:CLOSE, ASV1:CLOSE, ASV2:CLOSE

OPERATION 2: AP:ON, EASV:OPEN, ASV1:OPEN, ASV2:OPEN

(b) Check that the PRESSURE on the hand−held tester.

NOTICE:

This test only allows technicians to operate the AI system for 5 seconds. Furthermore, the test can be performed 4 times a trip. If the test is repeated, intervals of at least 30 seconds are required between tests.

While the AI system operation using the hand−held tester is prohibited, the tester displays the prohibition (WAIT or ERROR). If the ERROR (AI STATUS NG) is displayed on the tester, stop the engine for 10 minutes and then try again..

OK:

Tester operation	PRESSURE
Operation 1	Less then 2.5 kPa
Operation 2	5 to 8 kPa or more

NG → **Go to step 4.**

OK

3	**Check whether DTC output recurs.**

PREPARATION:

(a) Start the engine and warm it up.
(b) Turn the ignition switch OFF.
(c) Connect a hand−held tester to the DLC3.
(d) Turn the ignition switch to ON and turn the tester ON.
(e) Clear the DTCs (see page DI−462).
(f) Start the engine.

CHECK:

(a) Perform ACTIVE TEST to operate the air injection system.
Select the following menu items: DIAGNOSIS/ENHANCED OBD II/SYSTEM CHECK/AIR INJ CHECK/AUTOMATIC OPERATION
(b) After operating the secondary air injection system, confirm the pending codes for the secondary air injection system by selecting the following menu items: DIAGNOSIS / ENHANCED OBD II / DTC INFO / PENDING CODES.
(c) Read DTC and check DTC.

OK:

DTC P2444 or P2445 for the secondary air injection system is not output.

NG → **Go to step 4.**

OK

Check for intermittent problems (See page DI−430).

4	**Check vacuum hose.**

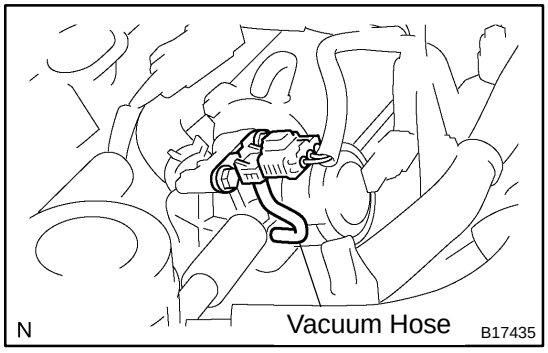

CHECK:

(a) Remove the intake manifold (see page EM−36).
(b) Check the vacuum hose connection between the pressure sensor and air switching valve.

OK:

The vacuum hose is securely connected.

CHECK:

(a) Inspect the vacuum hose for blockage or damage.

OK:

The vacuum hoses no blockages and damages.

NG → **Repair or replace vacuum hose.**

OK

5	Inspect ECM (air voltage).

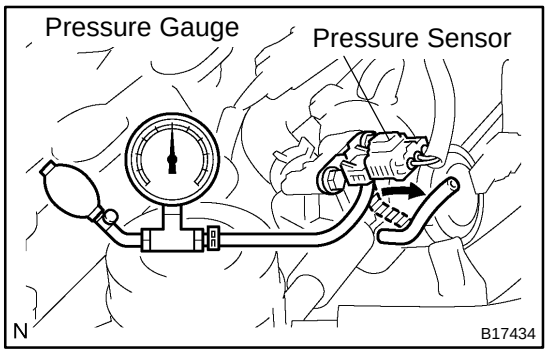

PREPARATION:

(a) Remove the intake manifold (see page EM−36).
(b) Connect the pressure gauge to the pressure sensor as shown in the illustration.
(c) Connect the hand−held tester to the DLC3 on the vehicle.
(d) Turn the ignition switch ON and push the hand−held tester main switch ON (Do not start engine).
(e) Select the following items: DIAGNOSIS / ENHANCED OBD II / DATA LIST / AIR PUMP PRS.

CHECK:

Check that the pressure displayed on the hand−held tester fluctuates when applying the pressure to the pressure sensor with the pressure gauge.

OK:

Pressure fluctuates in response to the pressure applied with pressure gauge.

NG	Replace pressure sensor.

OK

6	Check connection of all air injection system piping and hoses.

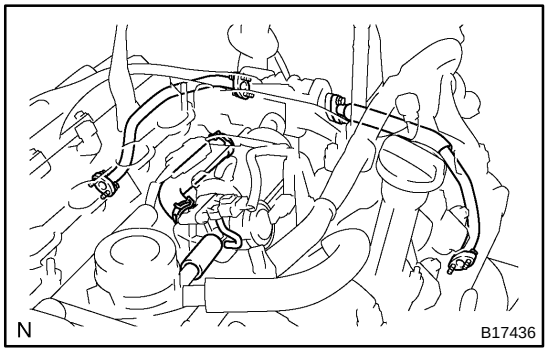

CHECK:

(a) Remove the intake manifold (see page EM−36).
(b) Check that all the pipes and hoses between the air pump and air switching valve are securely connected.

OK:

The all air injection pipes and hoses are securely connected.

CHECK:

(a) Check the pipe and hoses for blockage or damage.

OK:

The air injection system pipes and hoses has no blockages and damages.

NG	Repair or replace air injection system piping.

OK

7	Inspect air injection driver power source circuit.

Wire Harness Side:
Air Injection Driver Connector

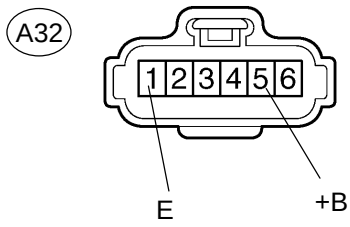

Wire Harness Side:
Air Injection Driver Connector

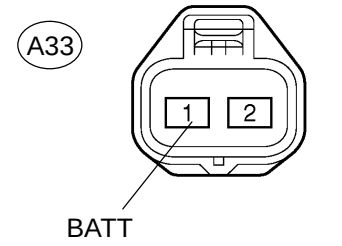

PREPARATION:

(a) Remove the intake manifold (see page EM−36).
(b) Disconnect the A32 and A33 air injection driver connector.
(c) Turn the ignition switch to ON.

CHECK:

Measure the voltage between terminals A32−5 (+B) and A33−1 (BATT) of the air injection driver and body ground.

OK:

Standard:

Tester Connection	Specified Condition
A32−5 (+B) − Body ground	10 V or more
A33−1 (BATT) − Body ground	10 V or more

CHECK:

Measure the resistance between the terminal A32−1 (E) of the air injection driver and body ground.

OK:

Standard:

Tester Connection	Specified Condition
A32−1 (E) − Body ground	Below 1 Ω

NG → **Repair or replace harness or connector.**

OK

8	Check voltage between AIRP and AIRV terminal of ECM and body ground.

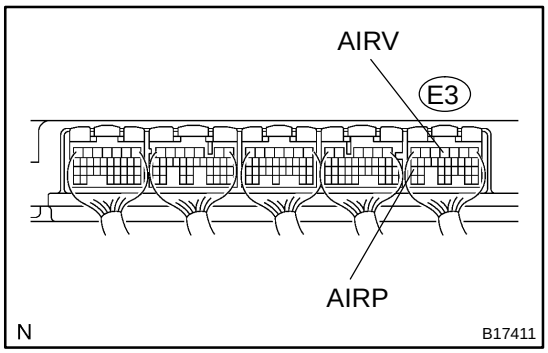

PREPARATION:

(a) Connect the hand−held tester to the DLC3.

(b) Turn the ignition switch ON and turn the tester ON.

CHECK:

(a) When the air pump and air switching valve are operated using hand−held tester, measure voltage between terminal E3−25 (AIRP) and E3−4 (AIRV) of the air injection driver connector and body ground.

(b) Select the following menu items: DIAGNOSIS/ENHANCED OBD II/SYSTEM CHECK/AIR INJ CHECK/MANUAL OPERATION/OPERATION 1 and 2

HINT:

OPERATION 1: AP:OFF, EASV:CLOSE, ASV1:CLOSE, ASV2:CLOSE

OPERATION 2: AP:ON, EASV:OPEN, ASV1:OPEN, ASV2:OPEN

NOTICE:

This test only allows technicians to operate the AI system for 5 seconds. Furthermore, the test can be performed 4 times a trip. If the test is repeated, intervals of at least 30 seconds are required between tests.

While the AI system operation using the hand−held tester is prohibited, the tester displays the prohibition (WAIT or ERROR). If the ERROR (AI STATUS NG) is displayed on the tester, stop the engine for 10 minutes and then try again..

OK:

Standard:

Air pump operation	Tester Connection	Specified Condition
ON	E3−25 (AIRP) − Body ground	10 V or more
OFF	E3−25 (AIRP) − Body ground	3.5 to 7.7 V*
ASV operation (EASV)	Tester Connection	Specified Condition
OPEN	E3−4 (AIRV) − Body ground	10 V or more
CLOSE	E3−4 (AIRV) − Body ground	3.5 to 7.7 V*

*: 35 to 55 % of the +B voltage.

NG → **Replace ECM (See page SF−82).**

OK

9	**Check voltage between SIV and SIP terminal of air injection driver and body ground.**

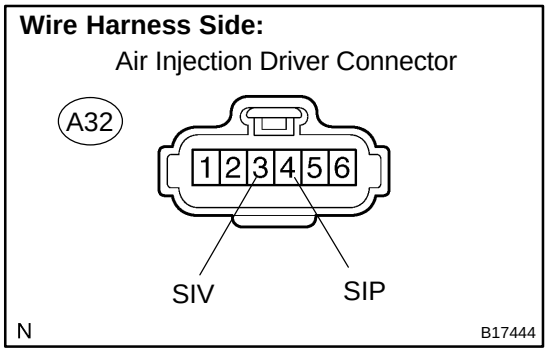

PREPARATION:

(a) Disconnect the A32 air injection driver connector.
(b) Connect the hand−held tester to the DLC3.
(c) Turn the ignition switch ON and turn the tester ON.

CHECK:

(a) When the air pump and air switching valve are operated using hand−held tester, measure voltage between terminal A32−3 (SIV) and A32−4 (SIP) of the air injection driver connector and body ground.
(b) Select the following menu items: DIAGNOSIS/ENHANCED OBD II/SYSTEM CHECK/AIR INJ CHECK/MANUAL OPERATION/OPERATION 1 and 2

HINT:

OPERATION 1: AP:OFF, EASV:CLOSE, ASV1:CLOSE, ASV2:CLOSE

OPERATION 2: AP:ON, EASV:OPEN, ASV1:OPEN, ASV2:OPEN

NOTICE:

This test only allows technicians to operate the AI system for 5 seconds. Furthermore, the test can be performed 4 times a trip. If the test is repeated, intervals of at least 30 seconds are required between tests.

While the AI system operation using the hand−held tester is prohibited, the tester displays the prohibition (WAIT or ERROR). If the ERROR (AI STATUS NG) is displayed on the tester, stop the engine for 10 minutes and then try again.

OK:

Standard:

Air pump operation	Tester Connection	Specified Condition
ON	A32−4 (SIP) − Body ground	10 V or more
OFF	A32−4 (SIP) − Body ground	3.5 to 7.7 V*
ASV operation (EASV)	Tester Connection	Specified Condition
OPEN	A32−3 (SIV) − Body ground	10 V or more
CLOSE	A32−3 (SIV) − Body ground	3.5 to 7.7 V*

*: 35 to 55 % of the +B voltage.

NG → **Repair or replace harness or connector between air injection driver and ECM.**

OK

10	Check voltage between terminal 2 of air pump and body ground.

Wire Harness Side:

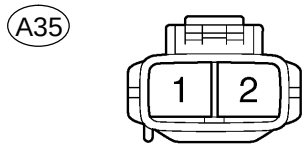

Air Pump Connector

N B17438

PREPARATION:

(a) Remove the intake manifold (see page EM−36).
(b) Disconnect the A35 air pump connector.
(c) Connect the hand−held tester to the DLC3.
(d) Turn the ignition switch ON and turn the tester ON.

CHECK:

(a) When the air pump is operated using the hand−held tester, measure voltage between terminal A35−2 of the air injection driver connector and body ground.
(b) Select the following menu items: DIAGNOSIS/ENHANCED OBD II/SYSTEM CHECK/ AIR INJ CHECK/ MANUAL OPERATION/OPERATION 1 and 2

HINT:

OPERATION 1: AP:OFF, EASV:CLOSE, ASV1:CLOSE, ASV2:CLOSE

OPERATION 2: AP:ON, EASV:OPEN, ASV1:OPEN, ASV2:OPEN

NOTICE:

This test only allows technicians to operate the AI system for 5 seconds. Furthermore, the test can be performed 4 times a trip. If the test is repeated, intervals of at least 30 seconds are required between tests.

While the AI system operation using the hand−held tester is prohibited, the tester displays the prohibition (WAIT or ERROR). If the ERROR (AI STATUS NG) is displayed on the tester, stop the engine for 10 minutes and then try again..

OK:

Standard:

Air pump operation	Tester Connection	Specified Condition
ON	A35−2 − Body ground	10 V or more
OFF	A35−2 − Body ground	Below 1.0 V

NG	Go to step 14.

OK

11	Check for open in harness and connector between air pump and body ground.

Wire Harness Side:

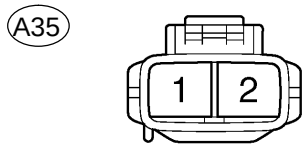

Air Pump Connector

N B17438

PREPARATION:

(a) Remove the intake manifold (see page EM−36).

(b) Disconnect the A35 air pump connector.

CHECK:

Measure the resistance between the wire harness side connectors and body ground.

OK:

Standard:

Tester Connection	Specified Condition
A35−1 − Body ground	Below 1 Ω

NG → **Repair or replace harness or connector.**

OK

12	Check air pump operation.

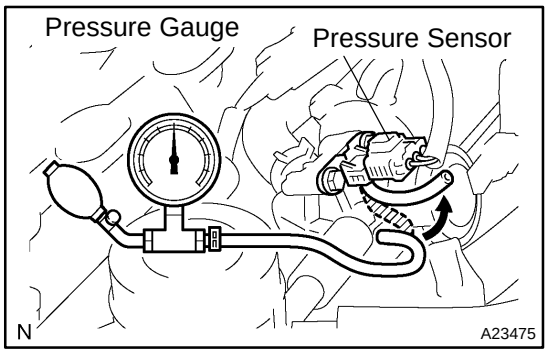

PREPARATION:

(a) Connect the pressure gauge to the air switching valve as shown in the illustration.
(b) Connect the hand−held tester to the DLC3.
(c) Turn the ignition switch ON and turn the tester ON.
(d) Select the following menu items: DIAGNOSIS/ENHANCED OBD II/ACTIVE TEST/AIR INJ CHECK/MANUAL OPERATION/OPERATION 3

CHECK:

(a) When the air pump is operated using the hand−held tester, measure the air injection system pressure.

HINT:

OPERATION 2: AP:ON, EASV:CLOSE, ASV1:CLOSE, ASV2:CLOSE

NOTICE:

This test only allows technicians to operate the AI system for 5 seconds. Furthermore, the test can be performed 4 times a trip. If the test is repeated, intervals of at least 30 seconds are required between tests.

While the AI system operation using the hand−held tester is prohibited, the tester displays the prohibition (WAIT or ERROR). If the ERROR (AI STATUS NG) is displayed on the tester, stop the engine for 10 minutes and then try again..

OK:

Standard:

25 to 30 kPa or more

NG	**Replace air pump.**

OK

13	**Check whether DTC output recurs.**

PREPARATION:

(a) Start the engine and warm it up.
(b) Turn the ignition switch OFF.
(c) Connect a hand−held tester to the DLC3.
(d) Turn the ignition switch to ON and turn the tester ON.
(e) Clear the DTCs (see page DI−462).
(f) Start the engine.

CHECK:

(a) Perform ACTIVE TEST to operate the air injection system.
Select the following menu items: DIAGNOSIS/ENHANCED OBD II/SYSTEM CHECK/AIR INJ CHECK/AUTOMATIC OPERATION
(b) After operating secondary air injection system, confirm the pending codes of the secondary air injection system by selecting the following menu items: DIAGNOSIS / ENHANCED OBD II / DTC INFO / PENDING CODES.
(c) Read DTC and check no DTC.

OK:

DTC P2444 or P2445 for the secondary air injection system is not output.

NG → **Check for intermittent problems (See page DI−430).**

OK ↓

END

14	**Check for open and short in harness and connector between air injection driver and air pump.**

Wire Harness Side:
Air Injection Driver Connector

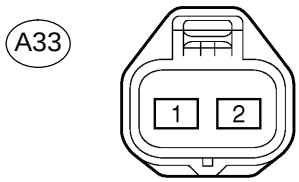

N B17443

Wire Harness Side:

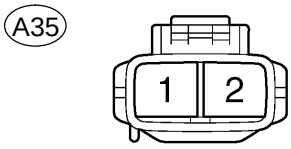

Air Pump Connector

N B17438

PREPARATION:
(a) Remove the intake manifold (see page EM−36).
(b) Disconnect the A33 air injection driver connector.
(c) Disconnect the A35 air pump connector.

CHECK:
Measure the resistance between the wire harness side connectors.

OK:

Standard:

Tester Connection	Specified Condition
VP (A33−2) − A35−2	Below 1 Ω
VP (A33−2) or A35−2 − Body ground	10 kΩ or higher

NG → **Repair or replace harness or connector.**

OK

Replace air injection driver.

DIDSA−01

DTC	P2610	ECM/PCM Internal Engine OFF Timer Performance

DTC SUMMARY

DTC	Monitoring Items	Malfunction Detection Conditions	Trouble Areas	Detection Timings	Detection Logic
P2610	Soak timer (built into ECM)	ECM internal malfunction	ECM	Engine running	2 trip

CIRCUIT DESCRIPTION

To ensure the accuracy of the EVAP (Evaporative Emission) monitor values, the soak timer, which is built into the ECM, measures 5 hours (±15 minutes) from when the ignition switch is turned OFF, before the monitor is run. This allows the fuel to cool down, which stabilizes the Fuel Tank Pressure (FTP). When 5 hours have elapsed, the ECM turns on.

Soak Timer Circuit

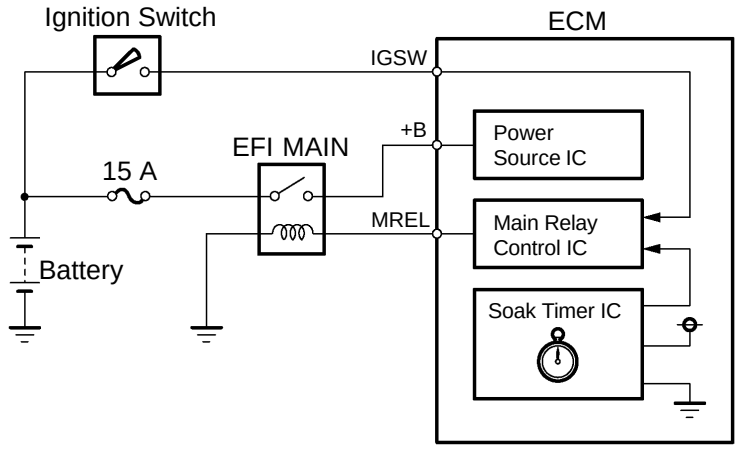

A23667

MONITOR DESCRIPTION

5 hours after the ignition switch is turned OFF, the soak timer activates the ECM to begin the EVAP system monitor. While the engine is running, the ECM monitors the synchronization of the soak timer and the CPU clock. If these two are not synchronized, the ECM interprets this as a malfunction, illuminates the MIL and sets the DTC (2 trip detection logic).

MONITOR STRATEGY

Related DTCs	P2610	Soak timer (built into ECM)
Required sensors/components	ECM	
Frequency of operation	Once per driving cycle	
Duration	10 min.	
MIL operation	2 driving cycles	
Sequence of operation	None	

TYPICAL ENABLING CONDITIONS

Item	Specification	
	Minimum	Maximum
The monitor will run whenever these DTCs are not present	See page DI−437	
Battery voltage	8 V	−
Ignition switch	ON	
Starter	OFF	
Engine	Running	

TYPICAL MALFUNCTION THRESHOLDS

Detection Criteria	Threshold
Soak time measurement when ECM CPU clock counts 10 min.	Less than 7 min., or more than 13 min.

INSPECTION PROCEDURE

HINT:

- DTC P2610 is set if an internal ECM problem is detected. Diagnostic procedures are not required. ECM replacement is required.
- Read freeze frame data using a hand−held tester. Freeze frame data record the engine condition when malfunctions are detected. When troubleshooting, freeze frame data can help determine if the vehicle was moving or stationary, if the engine was warmed up or not, if the air−fuel ratio was lean or rich, and other data, from the time the malfunction occurred.

1	**Replace ECM (See page SF−82).**

NEXT

Check whether DTC output recurs.

(a) Connect a hand−held tester to the DLC3.
(b) Turn the ignition switch to ON.
(c) Clear DTCs (see page DI−462).
(d) Start the engine and wait for 10 minutes or more.
(e) On the tester, select the following menu items: DIAGNOSIS / ENHANCED OBD II / DTC INFO / PENDING CODES.
(f) If no pending DTC is displayed, the repair has been successfully completed.

DIDRW−01

DTC	P1440	Secondary Air Injection System Control Valve Circuit Bank 1

DTC	P1443	Secondary Air Injection System Control Valve Circuit Bank 2

CIRCUIT DESCRIPTION

Refer to DTC P0412 on page DI−656.

DTC No.	DTC Detection Condition	Trouble Area
P1440	AIV1 terminal voltage becomes less than half of the +B voltage while the VSV for air injection control is not operating. (1 trip detection logic)	• Open or short in VSV for air injection control circuit (Bank 1) • VSV power source • VSV for air injection control (Bank 1) • ECM
P1443	AIV2 terminal voltage becomes less than half of the +B voltage while the VSV for air injection control is not operating. (1 trip detection logic)	• Open or short in VSV for air injection control circuit (Bank 2) • VSV power source • VSV for air injection control (Bank 2) • ECM

MONITOR DESCRIPTION

The ECM detects an open or short in the circuit of the VSV for air injection control according to the AIV1 (AIV2) terminal voltage, stores the DTC, and then illuminates the MIL. When the AIV1 (AIV2) terminal voltage is less than half of the +B voltage while the VSV for air injection control is not operating, the ECM determines it as a malfunction.

MONITOR STRATEGY

Related DTCs	P1440	Secondary air injection system control valve circuit (Bank 1) range check
	P1443	Secondary air injection system control valve circuit (Bank 2) range check
Required sensors/components	VSV for air injection control	
Frequency of operation	Continuous	
Duration	0.5 sec.	
MIL operation	Immediate	
Sequence of operation	None	

TYPICAL ENABLING CONDITIONS

Item	Specification	
	Minimum	Maximum
The monitor will run whenever this DTC is not present	See page DI−437	
P1440:		
Engine	Running	
Air switching valve No. 2 (Bank 1)	Not operating	
P1443:		
Engine	Running	
Air switching valve No. 2 (Bank 2)	Not operating	

TYPICAL MALFUNCTION THRESHOLDS

Detection Criteria	Threshold
P1440:	
Air switching valve No. 2 (Bank 1) output terminal level	Low
P1443:	
Air switching valve No. 2 (Bank 2) output terminal level	Low

WIRING DIAGRAM

Refer to DTC P0412 on page DI−656.

INSPECTION PROCEDURE

1	**Check VSV for air injection control power source.**

Wire Harness Side:

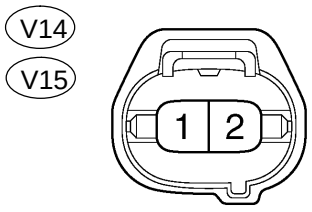

VSV for Air Injection Control Connector

N B17440

PREPARATION:

(a) Disconnect the VSV for air injection control connector.

(b) Turn the ignition switch ON.

CHECK:

Measure the voltage between the terminal 1of VSV connector and body ground.

OK:

Standard: 9 V or more

NG → **Check and replace harness and connector.**

OK

2	**Check for open and short circuit in harness and connector between ECM and VSV for air injection control**

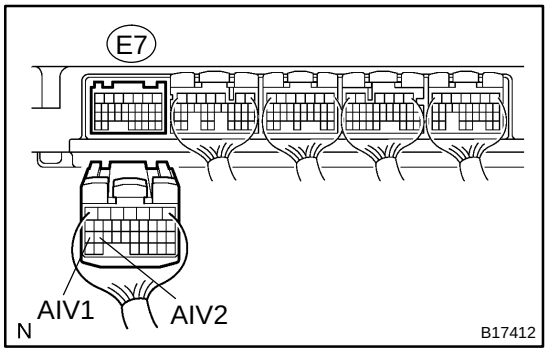

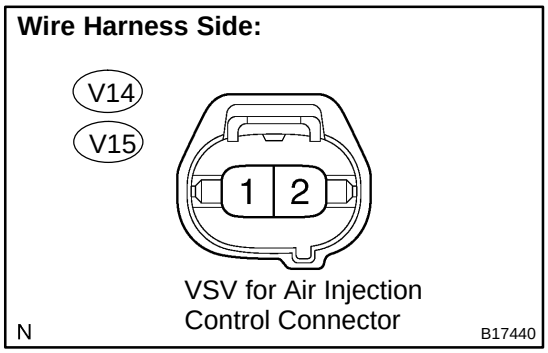

PREPARATION:

(a) Disconnect the E7 ECM connector.

(b) Disconnect the VSV for air injection control connector.

CHECK:

Measure the resistance between the VSV connector and ECM.

OK:

Standard:

Tester connection	Specified condition
E7−27 (AIV1) − V14−2	Below 1 Ω
E7−26 (AIV2) − V15−2	Below 1 Ω

CHECK:

Measure the resistance between the VSV connector and body ground.

OK:

Standard:

Tester connection	Specified condition
E7−27 (AIV1) or V14−2 and Body ground	10 KΩ or higher
E7−26 (AIV1) or V15−2 and Body ground	10 KΩ or higher

NG → **Repair or replace harness or connector.**

OK

3	Check resistance of VSV for air injection control.

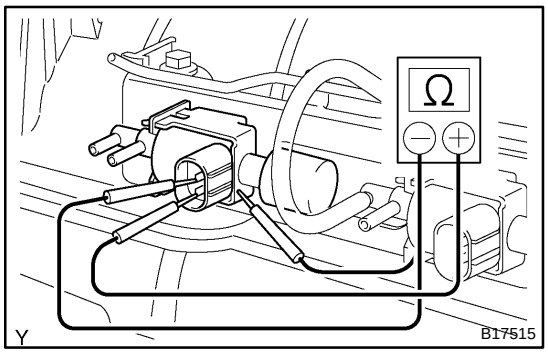

PREPARATION:

(a) Disconnect the connector from the VSV.

(b) Disconnect the 2 vacuum hoses from the VSV.

CHECK:

Measure the resistance between the VSV terminals.

OK:

Standard:

Tester Connection	Specified Condition
1 − 2	33 to 39 Ω at 20°C (68°F)
1 − Body ground	10 kΩ or higher
2 − Body ground	10 kΩ or higher

NG → **Replace VSV for air injection control.**

OK →

Replace ECM. (See page SF−82)

DIDRX−01

DTC	P1441	Secondary Air Injection System Switching Valve No.2 Stuck Open Bank 1

DTC	P1444	Secondary Air Injection System Switching Valve No.2 Stuck Open Bank 2

DTC	P2440	Secondary Air Injection System Switching Valve Stuck Open Bank 1

CIRCUIT DESCRIPTION

Refer to DTC P0412 on page DI−656.

DTC No.	DTC Detection Condition	Trouble Area
P1441	**Air switching valve No.2 (bank 1) stuck open:** The pressure sensor detects exhaust pulsation, when both of air switching valve No.2 OFF (and air switching valve ON). (2 trip detection logic)	• VSV for air injection control circuit (Bank 1) • Air switching valve No.2 (Bank 1) • VSV for air injection system (Bank 1) • ECM
P1444	**Air switching valve No.2 (bank 2) stuck open:** The pressure sensor detects exhaust pulsation, when both of air switching valve No.2 OFF (and air switching valve ON). (2 trip detection logic)	• VSV for air injection control circuit (Bank 2) • Air switching valve No.2 (Bank 2) • VSV for air injection system (Bank 2) • ECM
P2440	**Air switching valve stuck open:** The pressure sensor detects exhaust pulsation when the system is not operate (both of air switching valve No.2 OFF, and air switching valve OFF and air pump OFF). This DTC means open stuck of air switching valve and ”air switching valve No.2 bank 1 or bank 2” (1 trip detection logic)	• Electromagnetic air switching valve • Air switching valve No.2 (Bank 1 and/or 2) • VSV for air injection system (Bank 1 and/or 2) • Air injection driver • Air injection driver circuit • ECM

MONITOR DESCRIPTION

The ECM detects pressure change with the pressure sensor to determine malfunctioning parts in the system, and stores the DTCs. The ECM measures pressure and/or exhaust pulsation of the system at 6 points, A to F, when the air injection system is in operation or when not in operation. When the pressure is high, the ECM determines that the pump operates. When exhaust pulsation is detected, the ECM determines that the ASV is open. The ECM determines malfunction parts based on the measured value, and stores the DTCs.
Points A and B:
ECM detects pressure changes (decrease), and determines that the ASV No.2 is open.
Points C and F:
ECM detects pressure and exhaust pulsation, and determines the pressure pattern of the system.
Point D:
ECM operate the system, as indicated by the dashed lines, to determine which of the ASV No.2 is malfunctioning only when pressure changes cannot be detected at point B.
Point E:
ECM detects exhaust pulsation to determine the condition of the system.

Monitor Operation Outline

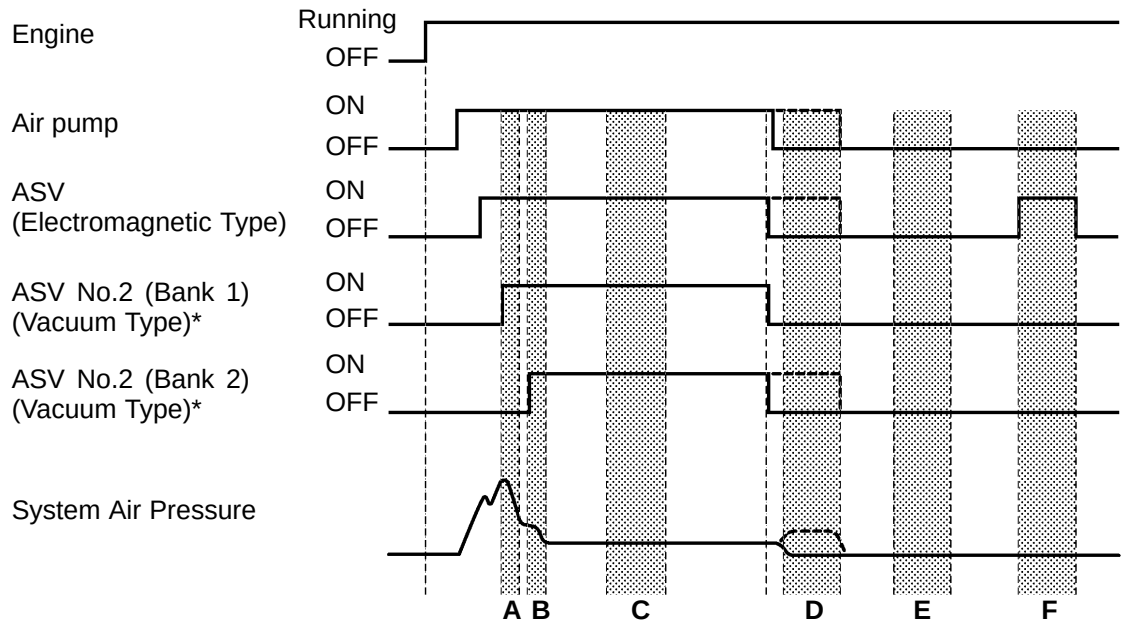

*: ASV No.2 opens alternately per a trip.

B17424

Pressure condition in Secondary Air Injection System
Pattern 1:

Air Pump	ON
Air Switching Valve and Air Switching Valve No.2	Open
Pressure	2.5 kPa or more
Pulsation detection	Exhaust gas pulsation detected

Pattern 2:

Air Pump	OFF
Air Switching Valve and Air Switching Valve No.2	Open
Pressure	Less than 2.5 kPa
Pulsation detection	Exhaust gas pulsation detected

Pattern 3:

Air Pump	ON
Air Switching Valve and Air Switching Valve No.2	Close
Pressure	2.5 kPa or more
Pulsation detection	Slight pulsation detected

Pattern 4:

Air Pump	OFF
Air Switching Valve and Air Switching Valve No.2	Close
Pressure	Less than 2.5 kPa
Pulsation detection	Not detected

Judgement and decision of failure mode:

Monitor						Judgement
C	F	A	B	D	E	DTCs where set
Pattern 1	Pattern 1	Pressure changed	Pressure changed	−	No pulsation detected	P2444, P1441 and P1443
Pattern 1	Pattern 1	No pressure changed	Pressure changed	−	No pulsation detected	P2444 and P1441
Pattern 1	Pattern 1	Pressure changed	No pressure changed	Pulsation detected	No pulsation detected	P2444 and P1443
Pattern 1	Pattern 1	No pressure changed	No pressure changed	Pulsation detected	No pulsation detected	P2444, P1441 and P1443
Pattern 1	Pattern 2	Pressure changed	Pressure changed	−	No pulsation detected	P1441 and P1443
Pattern 1	Pattern 2	No pressure changed	Pressure changed	−	No pulsation detected	P1441
Pattern 1	Pattern 2	Pressure changed	No pressure changed	Pulsation detected	No pulsation detected	P1443 and P1444
Pattern 1	Pattern 2	No pressure changed	No pressure changed	Pulsation detected	No pulsation detected	P1441, P1443 and P1444
Pattern 1	Pattern 3	Pressure changed	Pressure changed	−	No pulsation detected	P2444
Pattern 1	Pattern 3	No pressure changed	Pressure changed	−	No pulsation detected	P2444 and P1442
Pattern 1	Pattern 3	Pressure changed	No pressure changed	No pulsation detected	No pulsation detected	P2444 and P1442
Pattern 1	Pattern 3	No pressure changed	No pressure changed	No pulsation detected	No pulsation detected	P2444, P1442 and P1444
Pattern 1	Pattern 4	Pressure changed	Pressure changed	−	No pulsation detected	Normal
Pattern 1	Pattern 4	Pressure changed	No pressure changed	Pulsation detected	No pulsation detected	Normal
Pattern 1	Pattern 4	Pressure changed	No pressure changed	No pulsation detected	No pulsation detected	P1444
Pattern 1	Pattern 4	No pressure changed	Pressure changed	−	No pulsation detected	P1442
Pattern 1	Pattern 4	No pressure changed	No pressure changed	Pulsation detected	No pulsation detected	P1442
Pattern 1	Pattern 4	No pressure changed	No pressure changed	No pulsation detected	No pulsation detected	P1442 and P1444
Pattern 2	–	No pressure changed	No pressure changed	−	No pulsation detected	P2445
Pattern 3	Pattern 3	No pressure changed	No pressure changed	No pulsation detected	No pulsation detected	P2441, P2444, P1442 and P1444
Pattern 3	Pattern 4	No pressure changed	No pressure changed	No pulsation detected	No pulsation detected	P2441, P1442 and P1444
Pattern 4	–	No pressure changed	No pressure changed	–	–	P2445
–	–	–	–	−	Pulsation detected	P2440 and ”P1441 or P1444”

MONITOR STRATEGY

Related DTCs	P1441	AIR VSV (Bank 1) is stuck open (case 1)
	P1444	AIR VSV (Bank 2) is stuck open (case 2)
	P1441, P1444	AIR VSVs stuck open (case 3)
	P2440	AIR valve stuck open (case 4)
	P2440	AIR valve and AIR VSVs stuck open (case 5)
Required sensors/components	AIR pressure sensor, AIR valve, AIR VSV (Bank 1), AIR VSV (Bank 2)	
Frequency of operation	Once per driving cycle	
Duration	Within 60 seconds	
MIL operation	P1441, P1444: 2 driving cycles P2440: 1 driving cycle	
Sequence of operation	None	

TYPICAL ENABLING CONDITIONS

P1441, P1444: Air switching valve No. 2 bank 1 and/or bank 2 are stuck open

Item	Specification	
	Minimum	Maximum
The monitor will run whenever these DTCs are not present	See page DI−437	
Conditions for case 1, case 2, and case 4:		
Atmospheric pressure	45 kPa (338 mmHg)	−
Battery voltage	11.5 V	−
Sequence 1 to 6 are performed to monitor AIR	−	
Sequence 1	−	
AIR	In operation	
AIR pump	ON	
AIR valve (Electric type)	ON	
Either of the following conditions is met:	Condition 1 or 2	
1. Both of the following conditions are met:	Condition (a) and (b)	
(a) AIR valve (vacuum type) bank 1	ON	
(b) AIR valve (vacuum type) bank 2	OFF	
2. Both of the following conditions are met:	Condition (c) and (d)	
(c) AIR valve (vacuum type) bank 1	OFF	
(d) AIR valve (vacuum type) bank 2	ON	
Idle	ON	
Sequence 2	−	
AIR valve (Electric type)	ON	
AIR valve (vacuum type) bank 1	ON	
AIR valve (vacuum type) bank 2	ON	
Idle	ON	
Sequence 3	−	
AIR pump	ON	
AIR valve (Electric type)	ON	
AIR valve (vacuum type) bank 1	ON	
AIR valve (vacuum type) bank 2	ON	

Engine RPM	−	3750 rpm
Sequence 4 (This sequence is run when AIR pressure is no change at monitor)	−	
AIR	Not operating	
AIR pump	ON	
AIR valve (Electric type)	ON	
Either of the following conditions is met:	Condition 1 or 2	
1. Both of the following conditions are met:	Condition (a) and (b)	
(a) AIR valve (vacuum type) bank 1	ON	
(b) AIR valve (vacuum type) bank 2	OFF	
2. Both of the following conditions are met:	Condition (c) and (d)	
(c) AIR valve (vacuum type) bank 1	OFF	
(d) AIR valve (vacuum type) bank 2	ON	
Engine RPM	−	3750 rpm
Sequence 5	−	
AIR	Not operating	
AIR pump	OFF	
AIR valve (Electric type)	OFF	
AIR valve (vacuum type) bank 1	OFF	
AIR valve (vacuum type) bank 2	OFF	
Engine RPM	−	3750 rpm
Sequence 6	−	
AIR status	Not operating	
AIR pump	OFF	
AIR valve (Electric type)	ON	
AIR valve (vacuum type) bank 1	OFF	
AIR valve (vacuum type) bank 2	OFF	
Engine RPM	−	3750 rpm
Conditions for case 3:		
Atmospheric pressure	45 kPa (338 mmHg)	−
Battery voltage	11.5 V	−
AIR pump	OFF	
Time after engine start	10 seconds	−
AIR VSV bank 1	OFF	
AIR VSV bank 2	OFF	
AIR status	OFF	
Engine load	0 %	−
Intake air amount	40 g/sec.	−
IAT at engine start	−15°C (5°F)	−
ECT at engine start	−	5°C (41°F)
AIR valve (Electric type)	ON	
Engine RPM	−	3750 rpm
Conditions for case 5:		
Cumulative intake air amount	172 g/sec.	−
AIR pump	OFF	
AIR valve	OFF	

AIR VSV bank 1	OFF	
AIR VSV bank 2	OFF	
Engine RPM	−	3750 rpm
AIR pressure sensor malfunction (open circuit, out of range)	Not detected	
AIR status	OFF	

TYPICAL MALFUNCTION THRESHOLDS

Detection Criteria	Threshold
Thresholds for case 1	
Both of the following conditions are met:	Condition 1 or 2
1. One of the following conditions is met:	Condition (a), (b) or (c)
(a) All of the following conditions are met:	−
AIR pressure during monitor sequence 3	1 kPa (7.5 mmHg) or more and pulse is generated
AIR pressure during monitor sequence 6	Less than 5 kPa (37.5 mmHg) and pulse is generated
(b) All of the following conditions are met:	−
AIR pressure during monitor sequence 3	1 kPa (7.5 mmHg) or more and pulse is generated
AIR pressure during monitor sequence 6	5 kPa (37.5 mmHg) or more and pulse is generated
(c) All of the following conditions are met:	−
AIR pressure during monitor sequence 3	Less than 1 kPa (7.5 mmHg) and pulse is generated
AIR pressure during monitor sequence 6	Less than 5 kPa (37.5 mmHg) and pulse is generated
2. One of the following conditions is met:	Condition (d), (e) or (f)
(d) All of the following conditions are met:	−
AIR pressure during monitor sequence 1	Change
AIR pressure during monitor sequence 2	Change
(e) AIR pressure during monitor sequence 1 (when AIR VSV bank 1 is open)	No change
(f) AIR pressure during monitor sequence 2 (when AIR VSV bank 1 is open)	No change
Thresholds for case 2	
Both of the following conditions are met:	Condition 1 or 2
1. One of the following conditions is met:	Condition (a), (b) or (c)
(a) All of the following conditions are met:	−
AIR pressure during monitor sequence 3	1 kPa (7.5 mmHg) or more and pulse is generated
AIR pressure during monitor sequence 6	Less than 5 kPa (37.5 mmHg) and pulse is generated
(b) All of the following conditions are met:	−
AIR pressure during monitor sequence 3	1 kPa (7.5 mmHg) or more and pulse is generated
AIR pressure during monitor sequence 6	5 kPa (37.5 mmHg) or more and pulse is generated
(c) All of the following conditions are met:	−
AIR pressure during monitor sequence 3	Less than 1 kPa (7.5 mmHg) and pulse is generated
AIR pressure during monitor sequence 6	Less than 5 kPa (37.5 mmHg) and pulse is generated
2. One of the following conditions is met:	Condition (d), (e) or (f)
(d) All of the following conditions are met:	−
AIR pressure during monitor sequence 1	Change
AIR pressure during monitor sequence 2	Change

(e) AIR pressure during monitor sequence 1 (when AIR VSV bank 2 is open)	No change
(f) AIR pressure during monitor sequence 2 (when AIR VSV bank 1 is open)	No change
Thresholds for case 3	
AIR pressure	Pulse is generated
Thresholds for case 4	
Both of the following conditions are met:	−
AIR pressure during monitor sequence 3	Less than 1 kPa (7.5 mmHg) and pulse is generated
AIR pressure during monitor sequence 5	No pulse is generated
Thresholds for case 5	
AIR pressure change	Pulse is generated

MONITOR RESULT

Refer to page DI−445 for detailed information.

The test value and test limit information are described as shown in the following table. Check the monitor result and test values after performing the monitor drive pattern (refer to ”Confirmation Monitor”).

- MID (Monitor Identification Data) is assigned to each emissions−related component.
- TID (Test Identification Data) is assigned to each test value.
- Scaling is used to calculate the test value indicated on generic tools.

Secondary air injection (AIR) system

MID	TID	Scaling	Description of Test Value	Minimum Test Limit	Maximum Test Limit
$71	$E1	Multiply by 0.01 (g/s)	Test value of AIR amount insufficient	Minimum test limit	Maximum test limit
$71	$E2	Multiply by 0.01 (kPa)	Test value of AIR pump stuck ON	Minimum test limit	Maximum test limit
$71	$E3	Multiply by 0.01 (kPa)	Test value of AIR pump stuck OFF	Minimum test limit	Maximum test limit
$71	$E4	Multiply by 0.01 (kPa)	Test value of AIR control valve ON	Minimum test limit	Maximum test limit
$71	$E5	Multiply by 0.01 (kPa)	Test value of AIR control valve OFF	Minimum test limit	Maximum test limit
$71	$E6	Multiply by 0.01 (kPa)	Test value of AIR pressure change for AIR valve	Minimum test limit	Maximum test limit
$71	$E7	Multiply by 0.01 (kPa)	Test value of AIR pressure change for AIR VSV bank 1	Minimum test limit	Maximum test limit
$71	$E8	Multiply by 0.01 (kPa)	Test value of AIR pressure change for AIR VSV bank 2	Minimum test limit	Maximum test limit
$71	$E9	Multiply by 0.01 (kPa)	Test value of AIR pressure pulsation for AIR VSV when AIR pressure is low	Minimum test limit	Maximum test limit

WIRING DIAGRAM

Refer to DTC P0412 on page DI−656.

INSPECTION PROCEDURE

1	**Check any other DTCs output (In addition to secondary air injection system DTCs).**

PREPARATION:
(a) Connect hand−held tester to the DLC3.
(b) Turn the ignition switch to ON and turn the tester ON.
(c) Select the following menu items: DIAGNOSIS / ENHANCED OBD II / DTC INFO / CURRENT CODES.
CHECK:
(a) Read DTCs.
RESULT:

Display (DTC Output)	Proceed To
”P1441 and/or P1444” and P2440	A
P1441 and/or P1444	B
”P1441 and/or P1444 and/or P2440” and other DTCs	C

HINT:
If any DTCs other than P1441, P1444 or P2440 are output, troubleshoot those DTCs first.

B	**Go to step 7.**
C	**Go to DTC chart (See page DI−462).**

A

2	**Check air switching valve operation.**

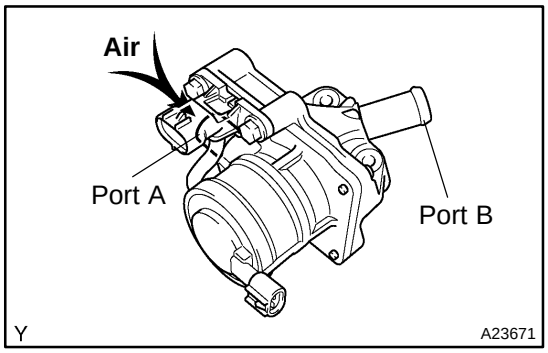

PREPARATION:
(a) Remove the intake manifold (see page EM−36).
(b) Remove the air switching valve.
CHECK:
Blow air into port A and check that air is not discharged from port B.
OK:
Not discharged

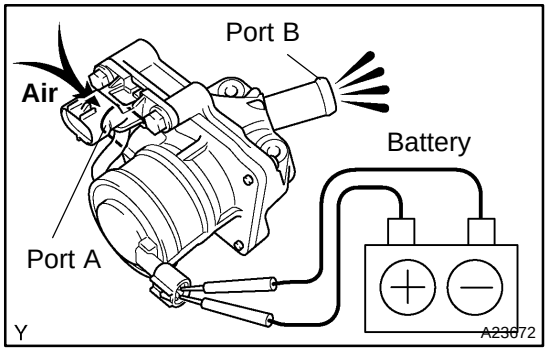

CHECK:
(a) Apply battery positive across the terminals.
(b) Blow air into port A and check that air is discharged from port B.
OK:
Discharged

NG → **Replace air switching valve and go to step 7.**

OK

3	**Check voltage between terminal 1 of air switching valve and body ground.**

Wire Harness Side:

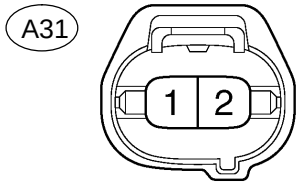

Air Switching Valve Connector

N B17440

PREPARATION:

(a) Remove the intake manifold (see page EM−36).
(b) Disconnect the A31 air switching valve connector.
(c) Turn the ignition switch ON.

CHECK:

Measure the voltage between terminal 1 of the air switching valve connector and body ground.

OK:

Standard:

Tester Connection	Specified Condition
A31−1 − Body ground	Below 1.0 V

NG → **Go to step 4.**

OK

Check for intermittent problems (See page DI−430) and go to step 7.

4	Check for open and short in harness and connector between air injection driver and air switching valve.

Wire Harness Side:
Air Injection Driver Connector

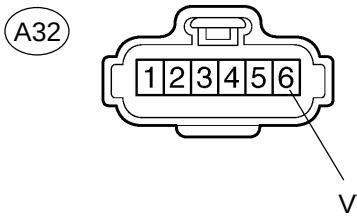

Wire Harness Side:

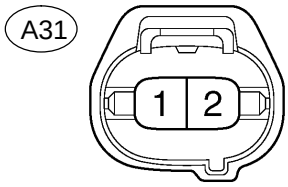

PREPARATION:
(a) Remove the intake manifold (see page EM−36).
(b) Disconnect the A32 air injection driver connector.
(c) Disconnect the A31 air switching valve connector.
(d) Disconnect the battery positive terminal cable.

CHECK:
Measure the resistance between the wire harness side connectors.

OK:

Standard:

Tester Connection	Specified Condition
VV (A32−6) − A31−1	Below 1 Ω
VV (A32−6) or A31−1 − Battery positive terminal cable	10 kΩ or higher

NG → **Repair or replace harness or connector.**

OK

5	Check voltage between SIV terminal of air injection driver and body ground.

Wire Harness Side:
Air Injection Driver Connector

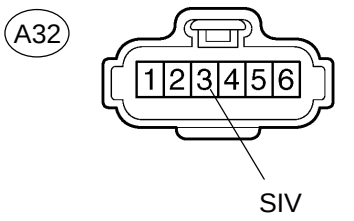

PREPARATION:
(a) Disconnect the A32 air injection driver connector.
(b) Turn the ignition switch ON.

CHECK:
Measure the voltage between terminal 3 (SIV) of the air injection driver connector and body ground.

OK:

Standard:

Tester Connection	Specified Condition
3 (SIV) − Body ground	10 V or more

NG → **Go to step 6.**

OK

Replace air injection driver.

6	**Check for open and short in harness and connector between air injection driver and ECM.**

Wire Harness Side:
Air Injection Driver Connector

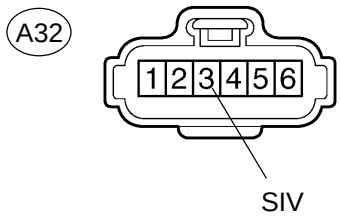

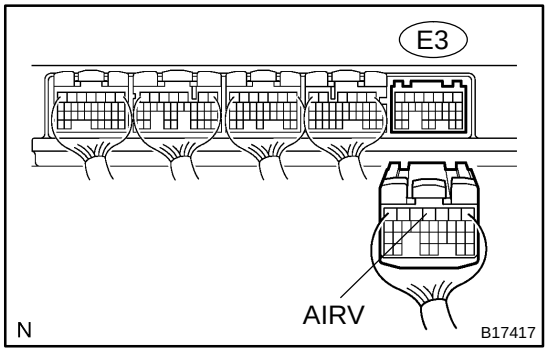

PREPARATION:
(a) Disconnect the air injection driver connector.
(b) Disconnect the E3 ECM connector.

CHECK:
Measure the resistance between the wire harness side connectors.

OK:

Standard:

Tester Connection	Specified Condition
SIV (A32−3) − AIRV (E3−4)	Below 1 Ω
SIV (A32−3) or AIRV (E3−4) − Body ground	10 kΩ or higher

NG → **Repair or replace harness or connector.**

OK

Replace ECM (See page SF−82).

7	Check air switching valve No.2 operation.

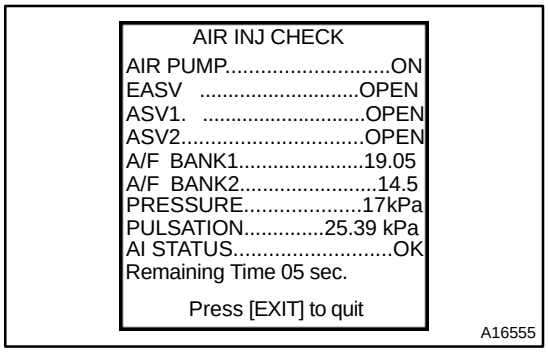

PREPARATION:

(a) Start the engine and warm it up.
(b) Turn the ignition switch to OFF.
(c) Connect the hand−held tester to the DLC3.
(d) Start the engine and push the hand−held tester main switch ON.

CHECK:

(a) Select the following menu items: DIAGNOSIS/ENHANCED OBD II/SYSTEM CHECK/ AIR INJ CHECK/ MANUAL OPERATION/OPERATION 5 and 6

HINT:

OPERATION 5: AP:ON, EASV:OPEN, ASV1:OPEN, ASV2:CLOSE

OPERATION 6: AP:ON, EASV:OPEN, ASV1:CLOSE, ASV2:OPEN

NOTICE:

This test only allows technicians to operate the AI system for 5 seconds. Furthermore, the test can be performed 4 times a trip. If the test is repeated, intervals of at least 30 seconds are required between tests.

While the AI system operation using the hand−held tester is prohibited, the tester displays the prohibition (WAIT or ERROR). If the ERROR (AI STATUS NG) is displayed on the tester, stop the engine for 10 minutes and then try again..

(b) Read values of the A/F BANK1 and BANK2 on the hand−held tester.

RESULT:

Air switching valve No.2 operation	Air−fuel ratio
Open	18 or more
Close	Approximately 14.5

HINT:

- When the ASV No.2 operates normally, the A/F value is 18 or more when the valve is open, and approximately 14.5 when the valve is closed.
- Perform the following procedures only on the bank of which the valve is not close.

NEXT

8	Check VSV for air injection control operation.

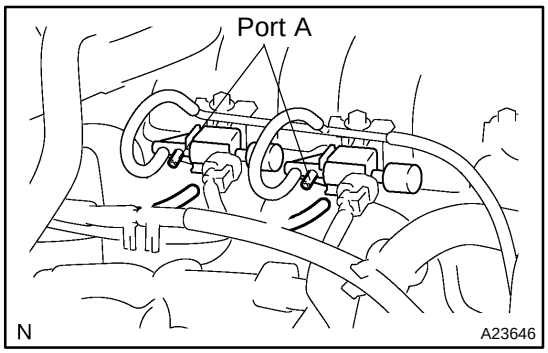

PREPARATION:

(a) Turn the ignition switch OFF.
(b) Disconnect the vacuum hose from the VSV for air injection control.
(c) Connect the hand−held tester to the DLC3.
(d) Start the engine and turn the tester ON.

CHECK:

(a) Select the following menu items: DIAGNOSIS/ENHANCED OBD II/SYSTEM CHECK/ AIR INJ CHECK/ MANUAL OPERATION/OPERATION 1
(b) At this time, check that no negative pressure generates at port A of the VSV.

HINT:

OPERATION 1: AP: OFF, EASV:CLOSE, ASV1:CLOSE, ASV2:CLOSE

NOTICE:

This test only allows technicians to operate the AI system for 5 seconds. Furthermore, the test can be performed 4 times a trip. If the test is repeated, intervals of at least 30 seconds are required between tests.

While the AI system operation using the hand−held tester is prohibited, the tester displays the prohibition (WAIT or ERROR). If the ERROR (AI STATUS NG) is displayed on the tester, stop the engine for 10 minutes and then try again..

OK:

No negative pressure is generated.

NG	**Go to step 10.**

OK

9	Check air switching valve No.2 operation.

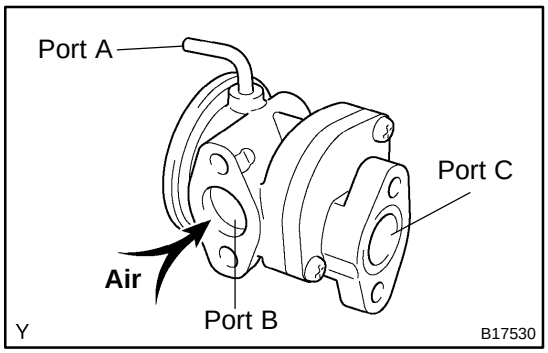

PREPARATION:
Remove the air switching valve No.2.
CHECK:
Blow air into port B and check that air is not discharged from port C.
OK:
Not discharged from port C

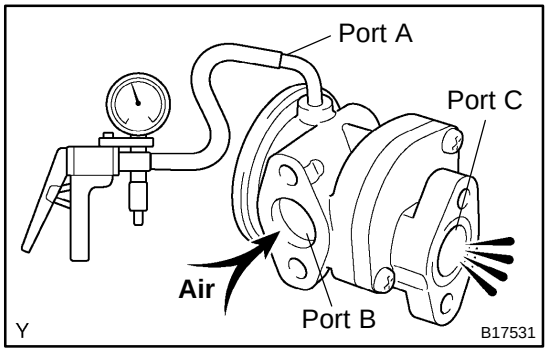

CHECK:
Apply vacuum 30 kPa (225 mmHg) to port A, blow air into port B and check that air is discharged from port C.
OK:
Discharged from port C

NG → **Replace air switching valve No.2.**

OK

Check for intermittent problems (See page DI−430).

10	Check VSV for air injection control.

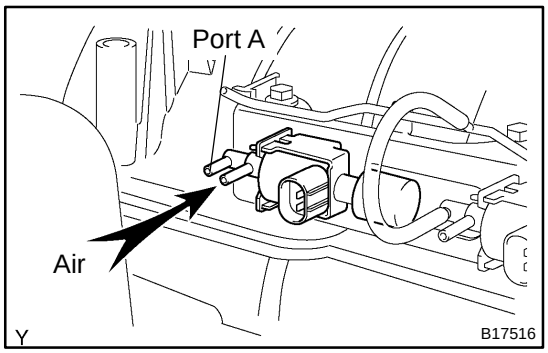

PREPARATION:

Disconnect the connector from the VSV for air injection control.

CHECK:

Check that air does not flow from the port as shown in the illustration.

OK:

Does not flow from port A

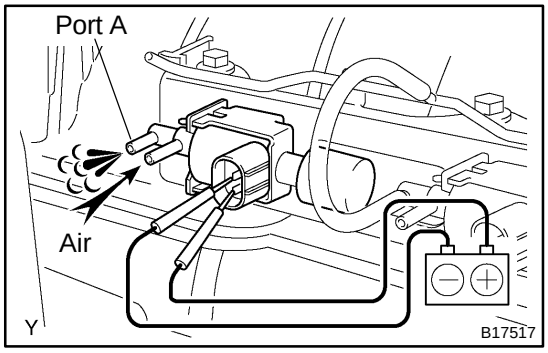

CHECK:

Apply battery positive across the terminals, check that air flows from the ports.

OK:

Flows from port A

NG → **Replace VSV for air injection control.**

OK

11	Check for open and short circuit in harness and connector between ECM and VSV for air injection system control

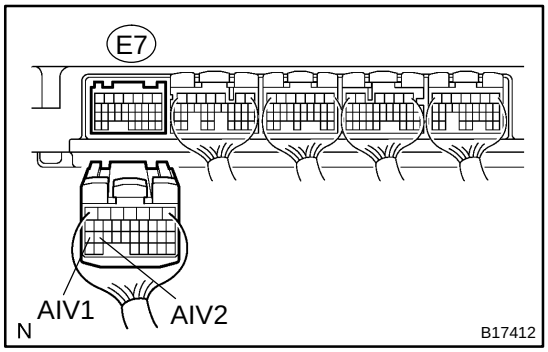

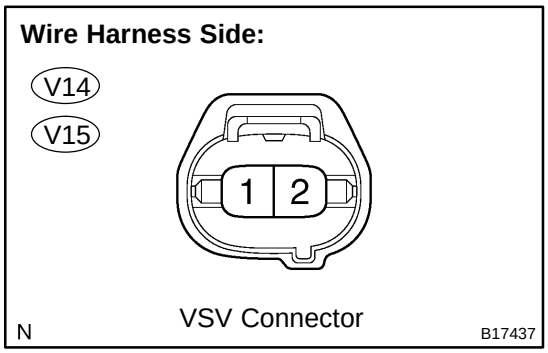

PREPARATION:

(a) Remove the intake manifold (see page EM−36).
(b) Disconnect the E7 ECM connector.
(c) Disconnect the VSV for air injection system control connector.

CHECK:

Measure the resistance between the VSV connector and ECM.

OK:

Standard:

Tester connection	Specified condition
E7−27 (AIV1) − V14−2	Below 1 Ω
E7−26 (AIV2) − V15−2	Below 1 Ω

CHECK:

Measure the resistance between the VSV connector and body ground.

OK:

Standard:

Tester connection	Specified condition
E7−27 (AIV1) or V14−2 and Body ground	10 KΩ or higher
E7−26 (AIV2) or V15−2 and Body ground	10 KΩ or higher

NG → **Repair or replace harness or connector.**

OK

Replace ECM (See page SF−82).

DIDRY−01

DTC	P1442	Secondary Air Injection System Switching Valve No.2 Stuck Close Bank 1

DTC	P1445	Secondary Air Injection System Switching Valve No.2 Stuck Close Bank 2

DTC	P2441	Secondary Air Injection System Switching Valve Stuck Close Bank 1

CIRCUIT DESCRIPTION

Refer to DTC P0412 on page DI−656.

DTC No.	DTC Detection Condition	Trouble Area
P1442	**Air switching valve No.2 (bank 1) stuck close:** No pressure change (decrease) after the ECM sends an open air switching valve No.2 (bank 1) signal. (2 trip detection logic)	• VSV for air injection control circuit (Bank 1) • Vacuum hose (VSV for air injection control − air switching valve No.2) • Air injector pipe (Air switching valve No.2 − exhaust manifold) • Air switching valve No.2 (Bank 1) • VSV for air injection control (Bank 1) • ECM
P1445	**Air switching valve No.2 (bank 2) stuck close:** No pressure change (decrease) after the ECM sends an open air switching valve No.2 (bank 2) signal. (2 trip detection logic)	• VSV for air injection control circuit (Bank 2) • Vacuum hose (VSV for air injection control − air switching valve No.2) • Air injector pipe (Air switching valve No.2 − exhaust manifold) • Air switching valve No.2 (Bank 2) • VSV for air injection control (Bank 2) • ECM
P2441	**Air switching valve stuck close:** The pressure sensor does not detect exhaust pulsation when system operates. (All of air switching valve ON) This DTC means either of following conditions. (a) Electromagnetic air switching valve stuck closed. (b) Both of ”air switching valve No.2 bank 1” and ”air switching valve No.2 bank 2” stuck closed. (2 trip detection logic)	• Vacuum hoses (Throttle body − VSVs for air injection control) • Air switching valve • Air injector pipe (Air switching valve No.2 − exhaust manifold) • Air injection hose • Air switching valve No.2 (Bank 1 and/or 2) • VSV for air injection control (Bank 1 and/or 2) • Air injection driver • Air injection driver circuit • ECM

MONITOR DESCRIPTION

Refer to DTC P1441, P1444 and P2440 on page DI−739.

MONITOR STRATEGY

Related DTCs	P1442	AIR VSV (Bank 1) is stuck close (case 1)
	P1444	AIR VSV (Bank 2) is stuck close (case 2)
	P2441	AIR valve stuck close (case 3)
Required sensors/components	AIR pressure sensor, AIR valve, AIR VSV (Bank 1), AIR VSV (Bank 2)	
Frequency of operation	Once per driving cycle	
Duration	Within 60 seconds	
MIL operation	2 driving cycles	
Sequence of operation	None	

TYPICAL ENABLING CONDITIONS

Item	Specification	
	Minimum	Maximum
The monitor will run whenever these DTCs are not present	See page DI−437	
Atmospheric pressure	45 kPa (338 mmHg)	−
Battery voltage	11.5 V	−
Sequence 1 to 6 are performed to monitor AIR	−	
Sequence 1	−	
AIR	In operation	
AIR pump	ON	
AIR valve (Electric type)	ON	
Either of the following conditions is met:	Condition 1 or 2	
1. Both of the following conditions are met:	Condition (a) and (b)	
(a) AIR valve (vacuum type) bank 1	ON	
(b) AIR valve (vacuum type) bank 2	OFF	
2. Both of the following conditions are met:	Condition (c) and (d)	
(c) AIR valve (vacuum type) bank 1	OFF	
(d) AIR valve (vacuum type) bank 2	ON	
Idle	ON	
Sequence 2	−	
AIR valve (Electric type)	ON	
AIR valve (vacuum type) bank 1	ON	
AIR valve (vacuum type) bank 2	ON	
Idle	ON	
Sequence 3	−	
AIR pump	ON	
AIR valve (Electric type)	ON	
AIR valve (vacuum type) bank 1	ON	
AIR valve (vacuum type) bank 2	ON	
Engine RPM	−	3750 rpm
Sequence 4 (This sequence is run when AIR pressure is no change at monitor)	−	
AIR	Not operating	
AIR pump	ON	

AIR valve (Electric type)	ON	
Either of the following conditions is met:	Condition 1 or 2	
1. Both of the following conditions are met:	Condition (a) and (b)	
(a) AIR valve (vacuum type) bank 1	ON	
(b) AIR valve (vacuum type) bank 2	OFF	
2. Both of the following conditions are met:	Condition (c) and (d)	
(c) AIR valve (vacuum type) bank 1	OFF	
(d) AIR valve (vacuum type) bank 2	ON	
Engine RPM	−	3750 rpm
Sequence 5	−	
AIR	Not operating	
AIR pump	OFF	
AIR valve (Electric type)	OFF	
AIR valve (vacuum type) bank 1	OFF	
AIR valve (vacuum type) bank 2	OFF	
Engine RPM	−	3750 rpm
Sequence 6	−	
AIR status	Not operating	
AIR pump	OFF	
AIR valve (Electric type)	ON	
AIR valve (vacuum type) bank 1	OFF	
AIR valve (vacuum type) bank 2	OFF	
Engine RPM	−	3750 rpm

TYPICAL MALFUNCTION THRESHOLDS

Detection Criteria	Threshold
Thresholds for case 1	
Both of the following conditions are met:	Condition 1 or 2
1. One of the following conditions is met:	Condition (a), (b), (c) or (d)
(a) All of the following conditions are met:	−
AIR pressure during monitor sequence 3	1 kPa (7.5 mmHg) or more and pulse is NOT generated
AIR pressure during monitor sequence 6	5 kPa (37.5 mmHg) or more and pulse is NOT generated
(b) All of the following conditions are met:	−
AIR pressure during monitor sequence 3	1 kPa (7.5 mmHg) or more and pulse is NOT generated
AIR pressure during monitor sequence 6	Less than 5 kPa (37.5 mmHg) and pulse is NOT generated
(c) All of the following conditions are met:	−
AIR pressure during monitor sequence 3	Less than 1 kPa (7.5 mmHg) or more and pulse is NOT generated
AIR pressure during monitor sequence 6	5 kPa (37.5 mmHg) or more and pulse is NOT generated
(d) All of the following conditions are met:	−
AIR pressure during monitor sequence 3	Less than 1 kPa (7.5 mmHg) or more and pulse is NOT generated
AIR pressure during monitor sequence 6	Less than 5 kPa (37.5 mmHg) and pulse is NOT generated
2. One of the following conditions is met:	Condition (e), (f) or (g)
(e) AIR pressure during monitor sequence 1 (when AIR VSV bank 1 is open)	No change
(f) AIR pressure during monitor sequence 2 (when AIR VSV bank 1 is open)	No change

(g) AIR pressure during monitor sequence 4 (when AIR VSV bank 1 is open)	No pulse is generated
Thresholds for case 2	
Both of the following conditions are met:	Condition 1 or 2
1. One of the following conditions is met:	Condition (a), (b), (c) or (d)
(a) All of the following conditions are met:	−
AIR pressure during monitor sequence 3	1 kPa (7.5 mmHg) or more and pulse is NOT generated
AIR pressure during monitor sequence 6	5 kPa (37.5 mmHg) or more and pulse is NOT generated
(b) All of the following conditions are met:	−
AIR pressure during monitor sequence 3	1 kPa (7.5 mmHg) or more and pulse is NOT generated
AIR pressure during monitor sequence 6	Less than 5 kPa (37.5 mmHg) and pulse is NOT generated
(c) All of the following conditions are met:	−
AIR pressure during monitor sequence 3	Less than 1 kPa (7.5 mmHg) or more and pulse is NOT generated
AIR pressure during monitor sequence 6	5 kPa (37.5 mmHg) or more and pulse is NOT generated
(d) All of the following conditions are met:	−
AIR pressure during monitor sequence 3	Less than 1 kPa (7.5 mmHg) or more and pulse is NOT generated
AIR pressure during monitor sequence 6	Less than 5 kPa (37.5 mmHg) or more and pulse is NOT generated
2. One of the following conditions is met:	Condition (e), (f) or (g)
(e) AIR pressure during monitor sequence 1 (when AIR VSV bank 2 is open)	No change
(f) AIR pressure during monitor sequence 2 (when AIR VSV bank 2 is open)	No change
Thresholds for case 3	
AIR pressure during monitor sequence 3	1 kPa (7.5 mmHg) or more and pulse is NOT generated
(g) AIR pressure during monitor sequence 4 (when AIR VSV bank 2 is open)	No pulse is generated

MONITOR RESULT

Refer to page DI−445 for detailed information.

The test value and test limit information are described as shown in the following table. Check the monitor result and test values after performing the monitor drive pattern (refer to ”Confirmation Monitor”).

- MID (Monitor Identification Data) is assigned to each emissions−related component.
- TID (Test Identification Data) is assigned to each test value.
- Scaling is used to calculate the test value indicated on generic OBD ll scan tools.

Secondary air injection (AIR) system

MID	TID	Scaling	Description of Test Value	Minimum Test Limit	Maximum Test Limit
$71	$E1	Multiply by 0.01 (g/s)	Test value of AIR amount insufficient	Minimum test limit	Maximum test limit
$71	$E2	Multiply by 0.01 (kPa)	Test value of AIR pump stuck ON	Minimum test limit	Maximum test limit
$71	$E3	Multiply by 0.01 (kPa)	Test value of AIR pump stuck OFF	Minimum test limit	Maximum test limit
$71	$E4	Multiply by 0.01 (kPa)	Test value of AIR control valve ON	Minimum test limit	Maximum test limit
$71	$E5	Multiply by 0.01 (kPa)	Test value of AIR control valve OFF	Minimum test limit	Maximum test limit
$71	$E6	Multiply by 0.01 (kPa)	Test value of AIR pressure change for AIR valve	Minimum test limit	Maximum test limit
$71	$E7	Multiply by 0.01 (kPa)	Test value of AIR pressure change for AIR VSV bank 1	Minimum test limit	Maximum test limit
$71	$E8	Multiply by 0.01 (kPa)	Test value of AIR pressure change for AIR VSV bank 2	Minimum test limit	Maximum test limit
$71	$E9	Multiply by 0.01 (kPa)	Test value of AIR pressure pulsation for AIR VSV when AIR pressure is low	Minimum test limit	Maximum test limit

WIRING DIAGRAM

Refer to DTC P1441, P1444 and P2440 on page DI−739.

INSPECTION PROCEDURE

1	**Check any other DTCs output (In addition to secondary air injection system DTCs).**

PREPARATION:

(a) Connect a hand−held tester to the DLC3.
(b) Turn the ignition switch to ON and turn the tester ON.
(c) Select the following menu items: DIAGNOSIS / ENHANCED OBD II / DTC INFO / CURRENT CODES.

CHECK:

(a) Read DTCs.

RESULT:

Display (DTC Output)	Proceed To
”P1442 and/or P1445” and P2441	A
P1442 and/or P1445	B
”P1442 and/or P1445 and/or P2441” and other DTCs	C

HINT:

If any DTCs other than P1441 and/or P1444 and P2440 are output, troubleshoot those DTCs first.

B	Go to step 6.
C	Go to DTC chart (See page DI−462).

A

2	Check vacuum hose between throttle body and VSV for air injection control.

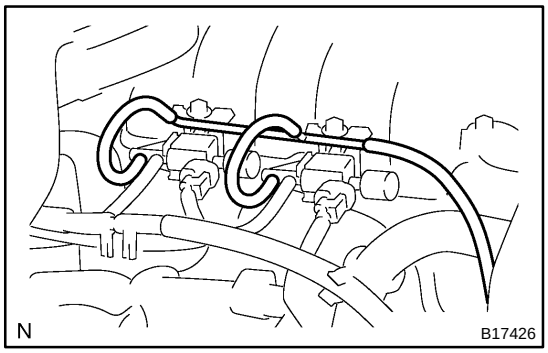

CHECK:

(a) Check that the vacuum hoses between the throttle body and VSV for air injection control are securely connected.

OK:

The vacuum hoses are securely connected.

CHECK:

(a) Inspect the vacuum hoses for blockages and damage.

OK:

The vacuum hoses no blockages and damages.

NG	Repair or replace vacuum hoses.

OK

3	Check voltage between terminal 1 of air switching valve and body ground.

Wire Harness Side:

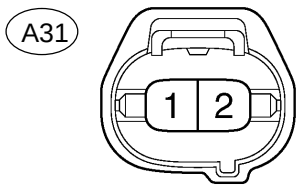

Air Switching Valve Connector

N B17440

PREPARATION:

(a) Remove the intake manifold (see page EM−36).
(b) Disconnect the A31 air switching valve connector.
(c) Connect the hand−held tester to the DLC3.
(d) Turn the ignition switch ON and turn the tester ON.

CHECK:

(a) When the air switching valve is operated using the hand−held tester, measure voltage between terminal A31−1 of the air switching valve connector and body ground.
(b) Select the following menu items: DIAGNOSIS/ENHANCED OBD II/SYSTEM CHECK/AIR INJ CHECK/MANUAL OPERATION/OPERATION 1 and 4

HINT:

OPERATION 1: AP:OFF, EASV:CLOSE, ASV1:CLOSE, ASV2:CLOSE

OPERATION 4: AP:OFF, EASV:OPEN, ASV1:CLOSE, ASV2:CLOSE

NOTICE:
This test only allows technicians to operate the AI system for 5 seconds. Furthermore, the test can be performed 4 times a trip. If the test is repeated, intervals of at least 30 seconds are required between tests.
While the AI system operation using the hand−held tester is prohibited, the tester displays the prohibition (WAIT or ERROR). If the ERROR (AI STATUS NG) is displayed on the tester, stop the engine for 10 minutes and then try again..

OK:

Standard:

Tester operation	Tester Connection	Specified Condition
Operation 4	A31−1 − Body ground	10 V or more
Operation 1	A31−1 − Body ground	Below 1.0 V

NG → **Go to step 12.**

OK

4	**Check all air injection pipes and hoses of air injection system.**

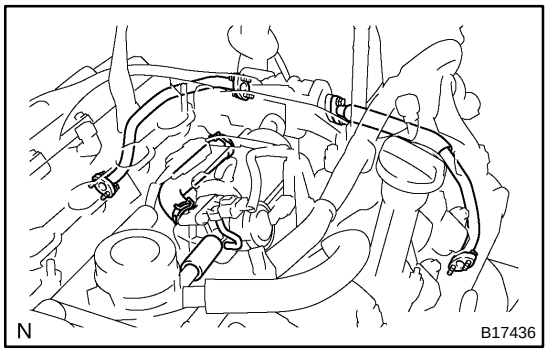

CHECK:

(a) Remove the intake manifold (see page EM−36).
(b) Check all pipes and hoses of the air injection system.

OK:

All the air injection pipes and hoses are securely connected.

CHECK:

(a) Check all pipes and hoses of the air injection system for blockage or damage.

OK:

The air injection system pipes and hoses have no blockage or damage.

NG → **Repair or replace pipe or hose.**

OK

5	Check air switching valve operation.

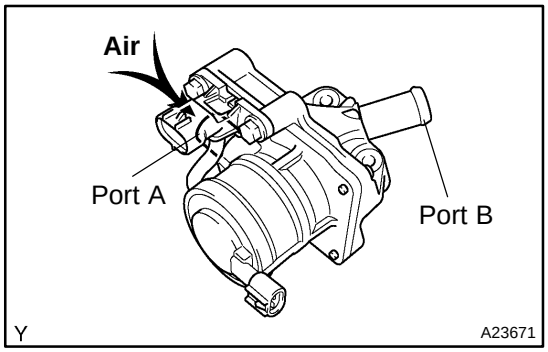

PREPARATION:

(a) Remove the intake manifold (see page EM−36).

(b) Remove the air switching valve.

CHECK:

Blow air into port A and check that air is not discharged from port B.

OK:

Not discharged

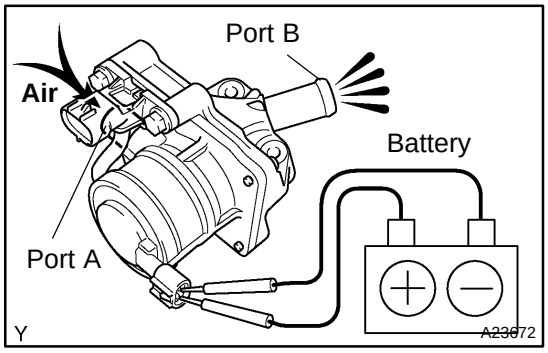

CHECK:

(a) Apply battery positive across the terminals.

(b) Blow air into port A and check that air is discharged from port B.

OK:

Discharged

NG → **Replace air switching valve and go to step 6.**

OK

6	Check air switching valve No.2 operation.

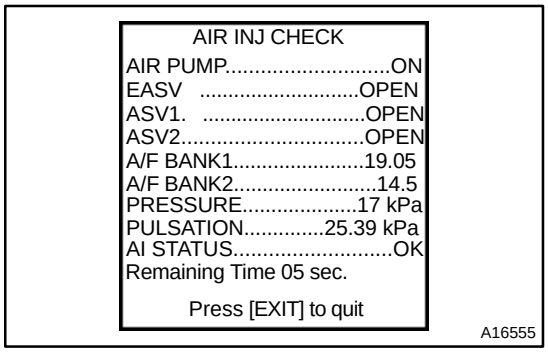

PREPARATION:

(a) Start the engine and warm it up.
(b) Turn the ignition switch to OFF.
(c) Connect the hand−held tester to the DLC3.
(d) Turn the ignition switch to ON and push the hand−held tester main switch ON.

CHECK:

(a) Select the following menu items: DIAGNOSIS/ENHANCED OBD II/SYSTEM CHECK/ AIR INJ CHECK/ MANUAL OPERATION/OPERATION 5 and 6

HINT:

OPERATION 5: AP:ON, EASV:OPEN, ASV1:OPEN, ASV2:CLOSE

OPERATION 6: AP:ON, EASV:OPEN, ASV1:CLOSE, ASV2:OPEN

NOTICE:

This test only allows technicians to operate the AI system for 5 seconds. Furthermore, the test can be performed 4 times a trip. If the test is repeated, intervals of at least 30 seconds are required between tests.

While the AI system operation using the hand−held tester is prohibited, the tester displays the prohibition (WAIT or ERROR). If the ERROR (AI STATUS NG) is displayed on the tester, stop the engine for 10 minutes and then try again..

(b) Read value of the A/F BANK1 and BANK2 on the hand−held tester.

RESULT:

Air switching valve No.2 operation	Air−fuel ratio
Open	18 or more
Close	Approximately 14.5

HINT:

- When the ASV No.2 operates normally, the A/F value is 18 or more when the valve is open, and approximately 14.5 when the valve is closed.
- Perform the following procedures only on the bank of which the valve is not open.

NEXT

7	Check VSV for air injection control operation.

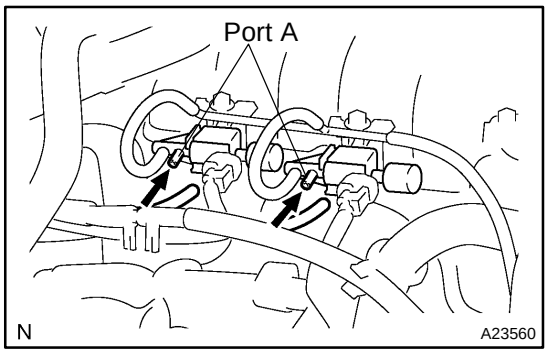

PREPARATION:

(a) Turn the ignition switch OFF.
(b) Disconnect the vacuum hose from the VSV for air injection control.
(c) Connect the hand−held tester to the DLC3.
(d) Turn the ignition switch to ON and turn the tester ON.

CHECK:

(a) When the air switching valve is operated using the hand−held tester, check that negative pressure from the port A.
(b) Select the following menu items: DIAGNOSIS/ENHANCED OBD II/SYSTEM CHECK/ AIR INJ CHECK/ MANUAL OPERATION/OPERATION 2

HINT:

OPERATION 2: AP: ON, EASV:OPEN, ASV1:OPEN, ASV2:OPEN

NOTICE:

This test only allows technicians to operate the AI system for 5 seconds. Furthermore, the test can be performed 4 times a trip. If the test is repeated, intervals of at least 30 seconds are required between tests.

While the AI system operation using the hand−held tester is prohibited, the tester displays the prohibition (WAIT or ERROR). If the ERROR (AI STATUS NG) is displayed on the tester, stop the engine for 10 minutes and then try again..

OK:

Negative pressure from port A

NG	**Go to step 10.**

OK

8	Check vacuum hose between air switching valve(s) No.2 and VSV for air injection control.

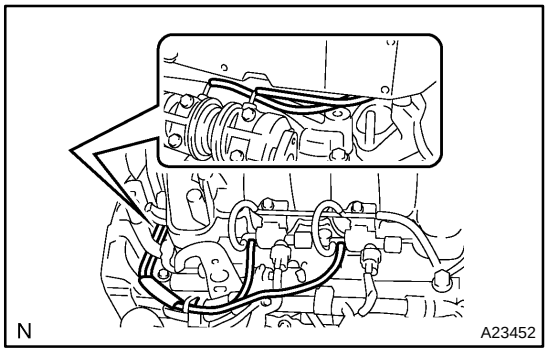

CHECK:

(a) Check that the vacuum hoses between the air switching valve(s) No.2 and VSV for air injection control are securely connected.

OK:

The vacuum hose(s) are securely connected.

CHECK:

(a) Check the vacuum hoses for blockages and damage.

OK:

The vacuum hoses no blockages and damages.

NG → **Repair or replace vacuum hose.**

OK

9	Check air switching valve No.2 operation.

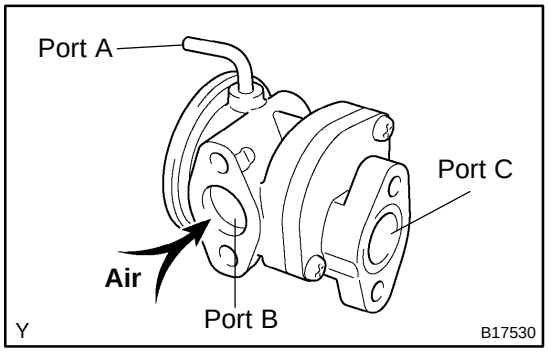

PREPARATION:

Remove the air switching valve No.2.

CHECK:

Blow air into port B and check that air is not discharged from the port C.

OK:

Not discharged from port C

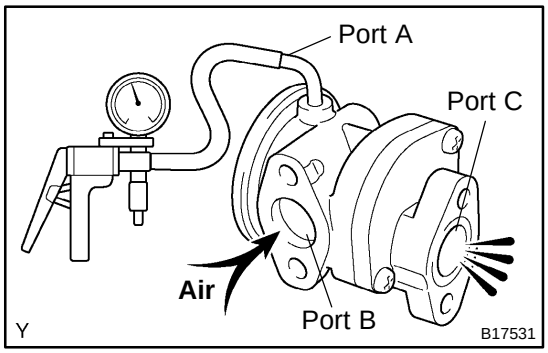

CHECK:

Apply vacuum 30 kPa (225 mmHg) to port A, blow air into port B and check that air is discharged from the port C.

OK:

Discharged from port C

NG → **Replace air switching valve No.2.**

OK

10	Check air injection pipe between air switching valve No.2 and exhaust manifold.

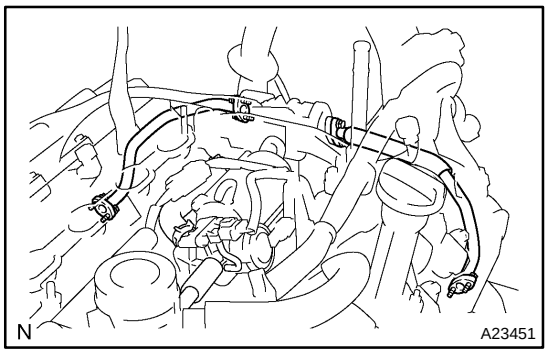

CHECK:

(a) Check that the air injection pipe between the air switching valve(s) No.2 and exhaust manifold are securely connected.

OK:

The air injection pipe is securely connected.

CHECK:

(a) Check the air injection pipe for blockages and damage.

OK:

The air injection pipe no blockages and damages.

NG → **Repair or replace air injection pipe.**

OK

Check for intermittent problems (See page DI−430).

11	Check VSV for air injection control.

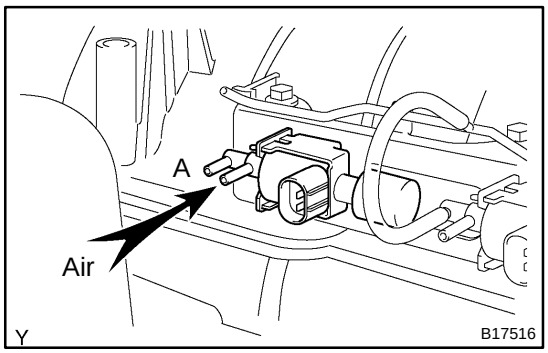

PREPARATION:

Disconnect the 2 vacuum hoses.

CHECK:

Check that air does not flow from the port A as shown in the illustration.

OK:

Not flow from port A

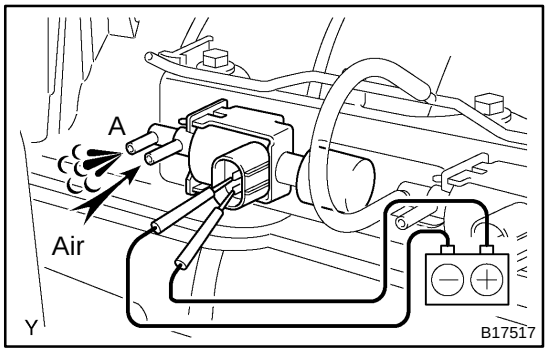

CHECK:

Apply battery positive across the terminals, check that air flows from the port A.

OK:

Flow from port A

NG → **Replace VSV for air injection control.**

OK

12	Check for open and short circuit in harness and connector between ECM and VSV for air injection system control

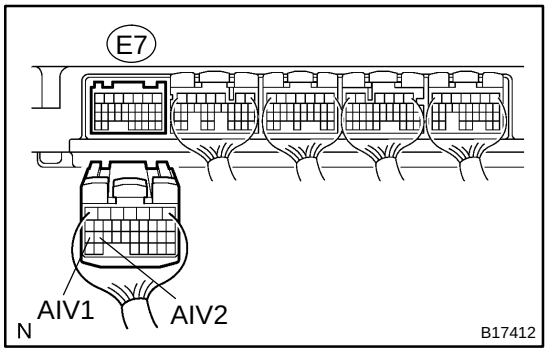

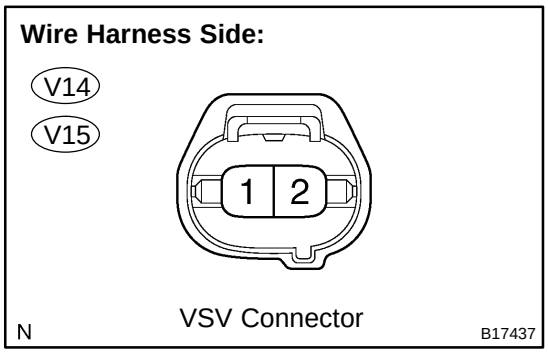

PREPARATION:

(a) Remove the intake manifold (see page EM−36).
(b) Disconnect the E7 ECM connector.
(c) Disconnect the VSV for air injection system control connector.

CHECK:

Measure the resistance between the VSV connector and ECM.

OK:

Standard:

Tester connection	Specified condition
E7−27 (AIV1) − V14−2	Below 1 Ω
E7−26 (AIV2) − V15−2	Below 1 Ω

CHECK:

Measure the resistance between the VSV connector and body ground.

OK:

Standard:

Tester connection	Specified condition
E7−27 (AIV1) or V14−2 and Body ground	10 KΩ or higher
E7−26 (AIV2) or V15−2 and Body ground	10 KΩ or higher

NG → **Repair or replace harness or connector.**

OK

13	**Check for open and short in harness and connector between air injection driver and air switching valve.**

Wire Harness Side:

Air Injection Driver Connector

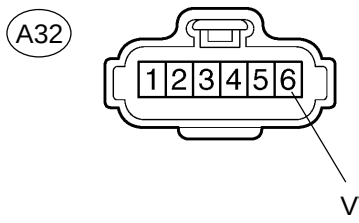

N B17444

Wire Harness Side:

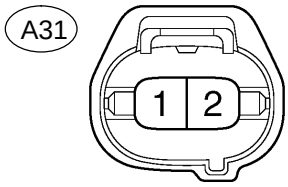

Air Switching Valve Connector

N B17440

PREPARATION:

(a) Remove the intake manifold (see page EM−36).
(b) Disconnect the A32 air injection driver connector.
(c) Disconnect the A31 air switching valve connector.

CHECK:

Measure the resistance between the wire harness side connectors.

OK:

Standard:

Tester Connection	Specified Condition
VV (A32−6) − A31−1	Below 1 Ω
VV (A32−6) or A31−1 − Body ground	10 kΩ or higher

NG → **Repair or replace harness or connector and go to step 6.**

OK

14	**Check for open in harness and connector between air switching valve and body ground.**

Wire Harness Side:

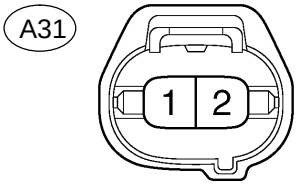

Air Switching Valve Connector

N B17440

PREPARATION:

(a) Remove the intake manifold (see page EM−36).
(b) Disconnect the A31 air switching valve connector.

CHECK:

Measure the resistance between the wire harness side connectors and body ground.

OK:

Standard:

Tester Connection	Specified Condition
A31−2 − Body ground	Below 1 Ω

NG → **Repair or replace harness or connector and go to step 6.**

OK

15	**Check for open and short in harness and connector between air injection driver and ECM.**

Wire Harness Side:
Air Injection Driver Connector

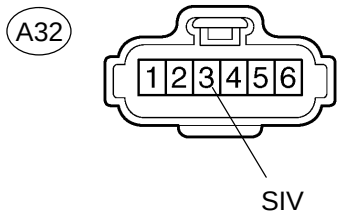

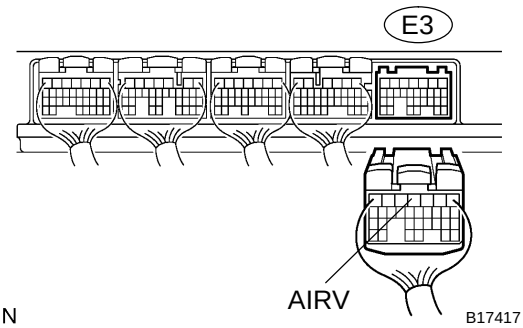

PREPARATION:
(a) Disconnect the air injection driver connector.
(b) Disconnect the E3 ECM connector.

CHECK:
Measure the resistance between the wire harness side connectors.

OK:

Standard:

Tester Connection	Specified Condition
SIV (A32−3) − AIRV (E3−4)	Below 1 Ω
SIV (A32−3) or AIRV (E3−4) − Body ground	10 kΩ or higher

NG → **Repair or replace harness or connector and go to step 6.**

OK

Replace ECM (See page SF−82).

DIDS0−01

DTC	P2102	Throttle Actuator Control Motor Circuit Low

DTC	P2103	Throttle Actuator Control Motor Circuit High

CIRCUIT DESCRIPTION

The throttle motor is operated by the ECM. It opens and closes the throttle valve.
The opening angle of the throttle valve is detected by the throttle position sensor which is mounted on the throttle body. The throttle position sensor provides feedback to the ECM. This feedback allows the ECM to control the throttle motor and monitor the throttle opening angle as the ECM responds to driver inputs.
HINT:
This Electrical Throttle Control System (ETCS) does not use a throttle cable.

DTC No.	DTC Detection Condition	Trouble Area
P2102	Conditions (a) and (b) continue for 2.0 seconds: (1 trip detection logic) (a) Throttle control motor output duty 80 % or more (b) Throttle control motor current less than 0.5 A or less	• Open in throttle control motor and sensor circuit • Throttle control motor and sensor • ECM
P2103	Either of the following condition is met (a) Hybrid IC diagnosis met: (b) Hybrid IC current limiter port fail	• Short in throttle control motor and sensor circuit • Throttle control motor and sensor • Throttle valve • Throttle body • ECM

MONITOR DESCRIPTION

The ECM monitors the current through the electronic throttle motor and detects malfunctions or open circuit in the throttle motor based on the voltage of the current. When the current deviates from the standard, the ECM concludes that there is a fault in the throttle motor.
Or, if the throttle valve is not functioning properly (for example, stuck ON), the ECM concludes that there is a fault, turns on the MIL and sets a DTC is set.
Example:
When the current is more than 10 A. Or the current is less than 0.5 A when the motor driving duty ratio is exceeding 80%. The ECM concludes that the current is out of range, turns on the MIL and a DTC is set.

FAIL SAFE

If the ETCS (Electronic Throttle Control System) has a malfunction, the ECM cuts off current to the throttle control motor. The throttle control valve returns to a predetermined opening angle (approximately 16°) by the force of the return spring. The ECM then adjusts the engine output by controlling the fuel infection (intermittent fuel−cut) and ignition timing in accordance with the accelerator pedal opening angle to enable the vehicle to continue at a minimum speed.
If the accelerator pedal is depressed firmly and slowly, the vehicle can be driven slowly.
If a ”pass” condition is detected and then the ignition switch is turned OFF, the fail−safe operation will stop and the system will return to normal condition.

MONITOR STRATEGY

Related DTCs	P2102	Throttle actuator control motor current (Low current)
	P2103	Throttle actuator control motor current (High current)
Required sensors/components	Throttle actuator motor	
Frequency of operation	Continuous	
Duration	2 sec.	
MIL operation	Immediate	
Sequence of operation	None	

TYPICAL ENABLING CONDITIONS

Item	Specification	
	Minimum	Maximum
The monitor will run whenever these DTCs are not present	See page DI−437	
P2102:		
Throttle motor	ON	
Duty−cycle ratio to open throttle actuator	80%	−
Throttle actuator power supply	8 V	−
Current motor current − Motor current at 0.016 sec. before	−	0.2 A
P2103:		
Throttle motor	ON	
Either of the following conditions is met:	Condition 1 or 2	
1. Throttle actuator power supply	8 V	−
2. Throttle actuator power	ON	
Battery voltage	8 V	−
Starter	OFF	

TYPICAL MALFUNCTION THRESHOLDS

Detection Criteria	Threshold
P2102:	
Throttle motor current	Less than 0.5 A (when motor drive duty 80% or more)
P2103:	
Either of the following condition is met	Condition (a) or (b)
(a) Hybrid IC diagnosis signal	Fail
(b) Hybrid IC current limiter port	fail

WIRING DIAGRAM

Refer to DTC P0120 on page DI−548.

INSPECTION PROCEDURE

HINT:

Read freeze frame data using the hand−held tester. Freeze frame data records the engine conditions when a malfunction is detected. When troubleshooting, freeze frame data can help determine if the vehicle was running or stopped, if the engine was warmed up or not, if the air−fuel ratio was lean or rich, as well as other data from the time when a malfunction occurred.

1	**Check throttle control motor.**

Component Side:
Throttle Control Motor and Sensor

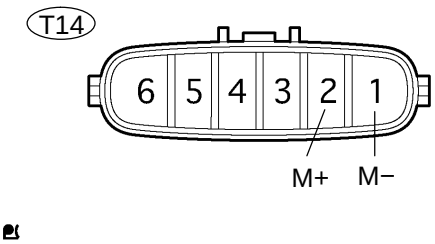

PREPARATION:

Disconnect the throttle control motor and sensor connector.

CHECK:

Measure the resistance between terminals of the throttle control motor.

OK:

Standard:

Tester Connection	Specified Condition
M+ (T14−2) − M− (T14−1)	0.3 to100 Ω (20°C (68°F))

NG → **Replace throttle body (See page SF−44).**

OK

2	Check for open and short in harness and connector between throttle control motor and ECM.

Wire Harness Side:
Throttle Control Motor and Sensor

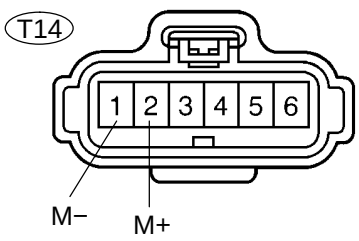

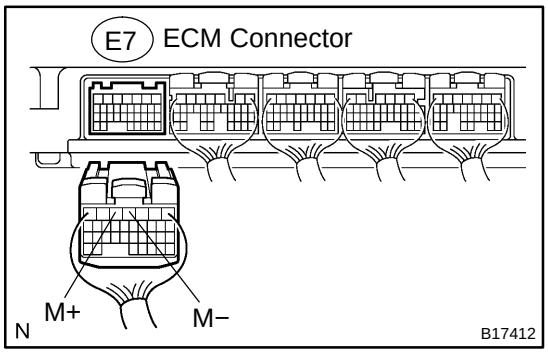

PREPARATION:

(a) Disconnect the T14 throttle control motor and sensor connector.

(b) Disconnect the E7 ECM connector.

CHECK:

Measure the resistance between the wire harness side connectors.

OK:

Standard:

Tester Connection	Specified Condition
M+ (T14−2) − M+ (E7−5)	Below 1 Ω
M− (T14−1) − M− (E7−4)	Below 1 Ω
M+ (T14−2) or M+ (E7−5) − Body ground	10 kΩ or higher
M− (T14−1) or M− (E7−4) − Body ground	10 kΩ or higher

NG → **Repair or replace harness or connector.**

OK

3	Visually check throttle valve.

CHECK:

Check the area between the throttle valve and the housing for foreign objects.
Also, check if the valve can open and close smoothly.

OK:

The throttle valve is not contaminated by foreign objects and can move smoothly.

NG → **Remove foreign object and clean throttle body.**

OK

Replace ECM (See page SF−82).

DIDS1−01

DTC	P2111	Throttle Actuator Control System −Stuck Open

DTC	P2112	Throttle Actuator Control System −Stuck Closed

CIRCUIT DESCRIPTION

The throttle motor is operated by the ECM. It opens and closes the throttle valve using gears. The opening angle of the throttle valve is detected by the throttle position sensor, which is mounted on the throttle body. The throttle position sensor provides feedback to the ECM to control the throttle motor and set the throttle valve angle in response to driver input.

HINT:

This Electrical Throttle Control System (ETCS) does not use a throttle cable.

DTC No.	DTC Detection Condition	Trouble Area
P2111	Throttle motor locked during ECM order to close. (1 trip detection logic)	• Throttle control motor and sensor circuit • Throttle control motor and sensor • Throttle body • Throttle valve
P2112	Throttle motor locked during ECM order to open. (1 trip detection logic)	

MONITOR DESCRIPTION

The ECM concludes that there is a malfunction of the ETCS (Electronic Throttle Control System) when the throttle valve remains at a fixed angle despite high drive current from the ECM. The ECM will turn on the MIL and a DTC is set.

FAIL SAFE

If the ETCS (Electronic Throttle Control System) has a malfunction, the ECM cuts off current to the throttle control motor. The throttle control valve returns to a predetermined opening angle (approximately 16°) by the force of the return spring. The ECM then adjusts the engine output by controlling the fuel infection (intermittent fuel−cut) and ignition timing in accordance with the accelerator pedal opening angle to enable the vehicle to continue at a minimum speed.

If the accelerator pedal is depressed firmly and slowly, the vehicle can be driven slowly.

If a ”pass” condition is detected and then the ignition switch is turned OFF, the fail−safe operation will stop and the system will return to normal condition.

MONITOR STRATEGY

Related DTCs	P2111	Throttle motor actuator lock (Open)
	P2112	Throttle motor actuator lock (Closed)
Required sensors/components	Main sensors/components	Throttle actuator motor
	Related sensors/components	Throttle position sensor
Frequency of operation	Continuous	
Duration	0.5 sec.	
MIL operation	Immediate	
Sequence of operation	None	

TYPICAL ENABLING CONDITIONS

Item	Specification	
	Minimum	Maximum
The monitor will run whenever these DTCs are not present	See page DI−437	
P2111:		
System guard*	ON	
Throttle motor current	2 A	−
Throttle motor duty to close side	80%	−
P2112:		
System guard*	ON	
Throttle motor current	2 A	−
Throttle motor duty to open side	80%	−
*System guard is ON when the following conditions are set:	−	
Throttle actuator	ON	
Throttle actuator duty calculation	Executing	
Throttle position sensor	Fail determined	
Throttle actuator current−cut operation	Not executing	
Throttle actuator power supply	4 V	−
Throttle actuator	Fail determined	

TYPICAL MALFUNCTION THRESHOLDS

Detection Criteria	Threshold
TP sensor voltage change	No change

WIRING DIAGRAM

Refer to DTC P0120 on page DI−548.

INSPECTION PROCEDURE

HINT:

Read freeze frame data using the hand−held tester. Freeze frame data records the engine conditions when a malfunction is detected. When troubleshooting, freeze frame data can help determine if the vehicle was running or stopped, if the engine was warmed up or not, if the air−fuel ratio was lean or rich, as well as other data from the time when a malfunction occurred.

1	**Check any other DTC output (in addition to DTC P2111 or P2112).**

PREPARATION:

(a) Connect a hand−held tester to the DLC3.
(b) Turn the ignition switch to ON and turn the tester ON.
(c) Select the following menu items: DIAGNOSIS / ENHANCED OBD II / DTC INFO / CURRENT CODES.

CHECK:

(a) Read DTCs.

Result:

Display (DTC Output)	Proceed To
P2111 and/or P2112	A
P2111 and/or P2112 and other DTCs	B

HINT:
If any DTCs other than P2111 and/or P2112 are output, troubleshoot those DTCs first.

B → **Go to relevant DTC chart (See page DI−477).**

A

2	**Visually check throttle valve.**

PREPARATION:

Remove the intake air connector.

CHECK:

Check whether or not a foreign body is caught between the throttle valve and housing. Also, check if the valve can open and close smoothly.

OK: The throttle valve is not contaminated by foreign objects and can move smoothly.

NG → **Remove foreign body and clean throttle body.**

OK

3	Check throttle control motor.

Component Side:
Throttle Control Motor and Sensor

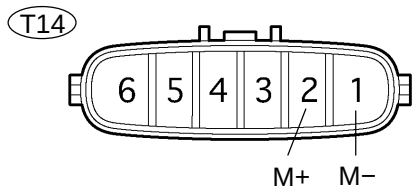

PREPARATION:
Disconnect the throttle control motor and sensor connector.

CHECK:
Measure the resistance between terminals of the throttle control motor.

OK:

Standard:

Tester Connection	Specified Condition
M+ (T14−2) − M− (T14−1)	0.3 to100 Ω (20°C (68°F))

NG → **Replace throttle body (See page SF−44).**

OK

4	Check for open and short in harness and connector between ECM and throttle control motor.

Wire Harness Side:
Throttle Control Motor and Sensor

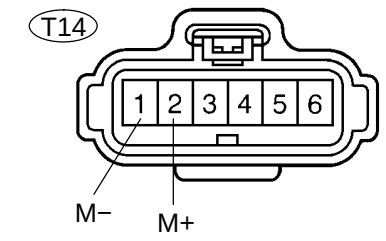

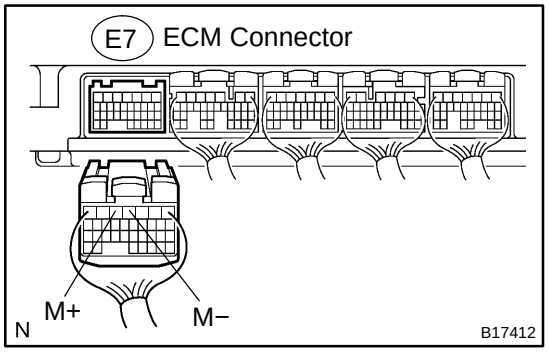

PREPARATION:
(a) Disconnect the T14 throttle control motor and sensor connector.
(b) Disconnect the E7 ECM connector.

CHECK:
Measure the resistance between the wire harness side connectors.

OK:

Standard:

Tester Connection	Specified Condition
M+ (T14−2) − M+ (E7−5)	Below 1 Ω
M− (T14−1) − M− (E7−4)	Below 1 Ω
M+ (T14−2) or M+ (E7−5) − Body ground	10 kΩ or higher
M− (T14−1) or M− (E7−4) − Body ground	10 kΩ or higher

NG → **Repair or replace harness or connector.**

OK

Check for intermittent problems (See page DI−430).

DTC	P2120	Throttle/Pedal Position Sensor/Switch ”D” Circuit

DTC	P2122	Throttle/Pedal Position Sensor/Switch ”D” Circuit Low Input

DTC	P2123	Throttle/Pedal Position Sensor/Switch ”D” Circuit High Input

DTC	P2125	Throttle/Pedal Position Sensor/Switch ”E” Circuit

DTC	P2127	Throttle/Pedal Position Sensor/Switch ”E” Circuit Low Input

DTC	P2128	Throttle/Pedal Position Sensor/Switch ”E” Circuit High Input

DTC	P2138	Throttle/Pedal Position Sensor/Switch ”D”/”E” Voltage Correlation

HINT:
This is the repair procedure for the ”Accelerator Pedal Position (APP) sensor”.

CIRCUIT DESCRIPTION

HINT:

- This electrical throttle control system does not use a throttle cable.
- This accelerator pedal position sensor is a non−contact type.

The accelerator pedal position sensor is mounted in the accelerator pedal to detect the angle of the accelerator pedal. This sensor is electronically controlled and uses Hall−effect elements.

In the accelerator pedal position sensor, the voltage applied to terminals VPA and VPA2 of the ECM changes between 0 V and 5 V in proportion to the angle of the accelerator pedal. The VPA is a signal to indicate the actual accelerator pedal angle and is used for the engine control. VPA2 is used to detect malfunctions of the sensor itself.

The ECM judges the current angle of the accelerator pedal from these signals input from terminals VPA and VPA2, and the ECM controls the throttle motor based on these signals.

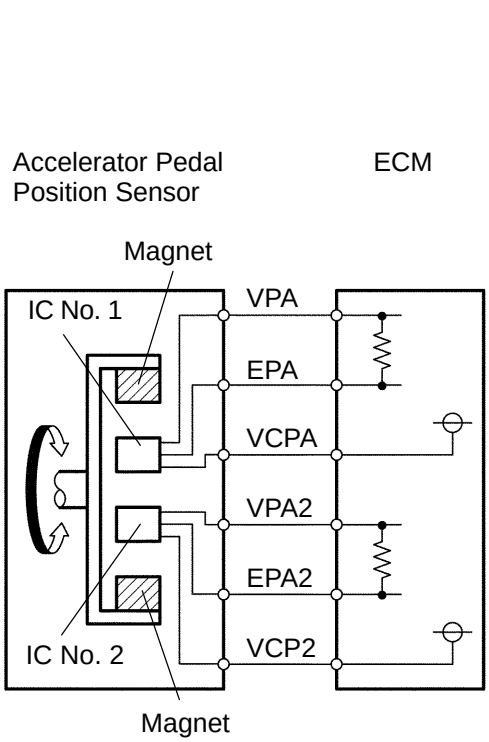

A19694

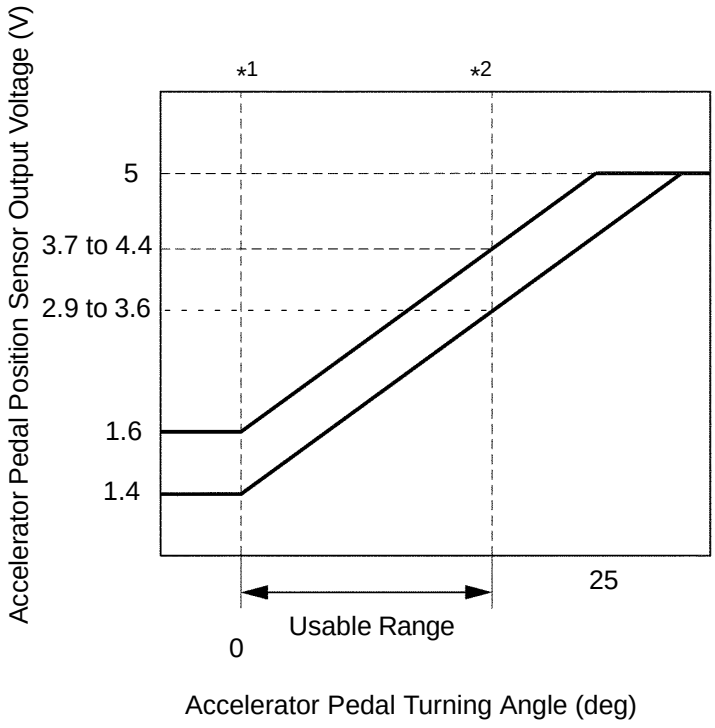

*1 : Accelerator Pedal Fully Released

*2 : Accelerator Pedal Fully Depressed

A19803

DTC No.	DTC Detection Condition (Open or short in accelerator pedal position sensor circuit)	Main trouble Area
P2120	Condition (a) continues for 0.5 seconds or more: (a) VPA ≦ 0.4 V or VPA ≧ 4.8 V	• Accelerator pedal position sensor • ECM
P2122	Condition (a) and (b) continues for 0.5 seconds or more: (a) VPA ≦ 0.4 V (b) VPA2 ≧ 0.04 V	• Accelerator pedal position sensor • VCPA circuit open • VPA circuit open or ground short • ECM
P2123	Condition (a) continues for 2.0 seconds or more: (a) VPA ≧ 4.8 V	• Accelerator pedal position sensor • EPA circuit open • ECM
P2125	Condition (a) continues for 0.5 seconds or more: (a) VPA2 ≦ 1.2 V or VPA2 ≧ 4.8 V and 0.4 V ≦ VPA ≦ 3.45 V	• Accelerator pedal position sensor • ECM
P2127	Condition (a) and (b) continues for 0.5 seconds or more: (a) VPA2 ≦ 1.2 V (b) VPA ≧ 0.04 V	• Accelerator pedal position sensor • VCP2 circuit open • VPA2 circuit open or ground short • ECM
P2128	Condition (a) and (b) continues for 2.0 seconds or more: (a) VPA2 ≧ 4.8 V (a) 0.4 V ≦ VPA ≦ 3.45 V	• Accelerator pedal position sensor • EPA circuit open • ECM
P2138	Condition (a) or (b) continues for 2.0 seconds or more: (a) |VPA − VPA2| ≦ 0.02 V (b) VPA ≦ 0.4 V and VPA2 ≦ 1.2 V	• VPA and VPA2 circuit are short circuited • Accelerator pedal position sensor • ECM

HINT:
After confirming DTC P2120, P2122, P2123, P2125, P2127, P2128 and P2138 use the OBD II scan tool or the hand−held tester to confirm the accelerator pedal opening percentage.

Trouble area	Accelerator pedal position expressed as voltage			
	Accelerator pedal completely released		Accelerator pedal fully depressed	
	ACCEL POS #1	ACCEL POS #2	ACCEL POS #1	ACCEL POS #2
VC circuit open	0 to 0.2 V	0 to 0.2 V	0 to 0.2 V	0 to 0.2 V
VPA circuit open or ground short	0 to 0.2 V	1.2 to 2.0 V	0 to 0.2 V	3.4 to 5.3 V
VPA2 circuit open or ground short	0.5 to 1.1 V	0 to 0.2 V	2.6 to 4.5 V	0 to 0.2 V
E2 circuit open	4.5 to 5.5 V	4.5 to 5.5 V	4.5 to 5.5 V	4.5 to 5.5 V

MONITOR DESCRIPTION

When VPA or VPA2 deviates from the standard, or the difference between the voltage outputs of the two sensors is less than threshold, the ECM concludes that there is a defect in the accelerator pedal position sensor. The ECM turns on the MIL and a DTC is set.
Example:
When the voltage output of the VPA is below 0.2 V or exceeds 4.8 V.

FAIL SAFE

The accelerator pedal position sensor has two (main and sub) sensor circuits. If a malfunction occurs in either of the sensor circuits, the ECM detects the abnormal signal voltage difference between the two sensor circuits and switches to limp mode. In limp mode, the remaining circuit is used to calculate the accelerator pedal opening to allow the vehicle to continue driving.
If both circuits malfunction, the ECM regards the opening angle of the accelerator pedal to be fully closed. In this case, the throttle valve will remain closed as if the engine is idling.
If a ”pass” condition is detected and then the ignition switch is turned OFF, the fail−safe operation will stop and the system will return to normal condition.

MONITOR STRATEGY

Related DTCs	P2120	Accelerator position sensor 1 (VPA) range check (Fluttering)
	P2122	Accelerator position sensor 1 (VPA) range check (Low voltage)
	P2123	Accelerator position sensor 1 (VPA) range check (High voltage)
	P2125	Accelerator position sensor 2 (VPA2) range check (Fluttering)
	P2127	Accelerator position sensor 2 (VPA2) range check (Low voltage)
	P2128	Accelerator position sensor 2 (VPA2) range check (High voltage)
	P2138	Accelerator position sensor correlation range check
Required sensors/components	Accelerator position sensor	
Frequency of operation	Continuous	
Duration	2 sec.	
MIL operation	Immediate	
Sequence of operation	None	

TYPICAL ENABLING CONDITIONS

Item	Specification	
	Minimum	Maximum
The monitor will run whenever these DTCs are not present	See page DI−437	
Ignition switch	ON	
Throttle control motor power	ON	

TYPICAL MALFUNCTION THRESHOLDS

Detection Criteria	Threshold
P2120:	
Either of the following conditions is met	Condition 1 or 2
1. VPA1 voltage when VPA2 is 0.04 V or more	0.4 V or less
2. VPA1 voltage	4.8 V or more
P2122:	
VPA1 voltage when VPA2 is 0.04 V or more	0.4 V or less
P2123:	
VPA1 voltage	4.8 V or more
P2125:	
Either of the following conditions is met	Condition 1 or 2
1. VPA2 voltage when VPA1 is 0.04 V or more	1.2 V or less
2. VPA2 voltage when VPA1 is 0.4 to 3.45 V	4.8 V or more
P2127:	
VPA2 voltage when VPA1 is 0.04 V or more	1.2 V or less
P2128:	
VPA2 voltage when VPA1 is 0.4 to 3.45 V	4.8 V or more

P2138:	
Either of the following condition is met:	Condition 1 or 2
1. Difference between VPA1 and VPA2 voltage	0.02 V or less
2. Both of the following conditions are met:	(a) and (b)
(a) VPA1 voltage	0.4 V or less
(b) VPA2 voltage	1.2 V or less

COMPONENT OPERATING RANGE

Parameter	Standard Value
VPA voltage	More than 0.4 V and less than 4.8 V
VPA2 voltage	More than 1.2 V and Less than 4.8 V
Difference between VPA and VPA2 voltages	More than 0.02 V

WIRING DIAGRAM

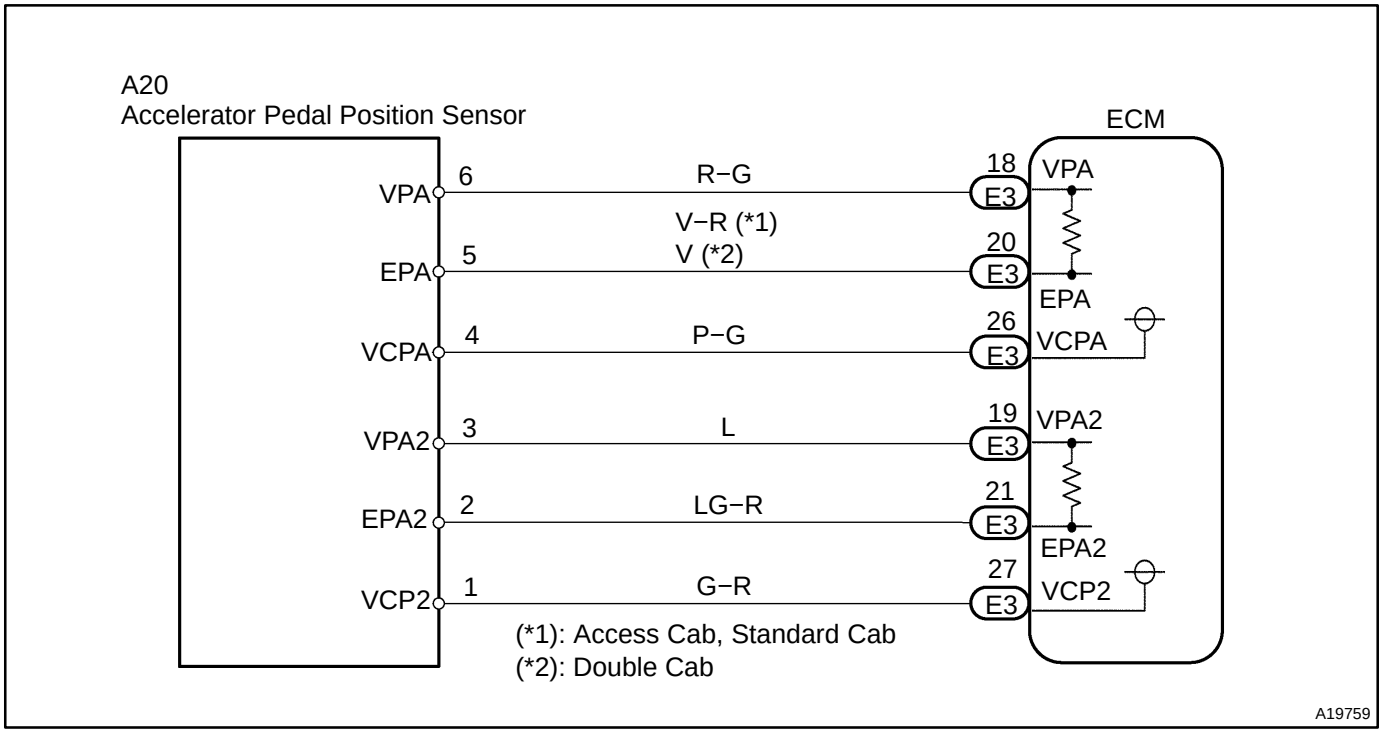

INSPECTION PROCEDURE

HINT:

Read freeze frame data using the hand−held tester. Freeze frame data records the engine conditions when a malfunction is detected. When troubleshooting, freeze frame data can help determine if the vehicle was running or stopped, if the engine was warmed up or not, if the air−fuel ratio was lean or rich, as well as other data from the time when a malfunction occurred.

1	**Connect hand−held tester, and read the voltage for accelerator pedal position sensor data.**

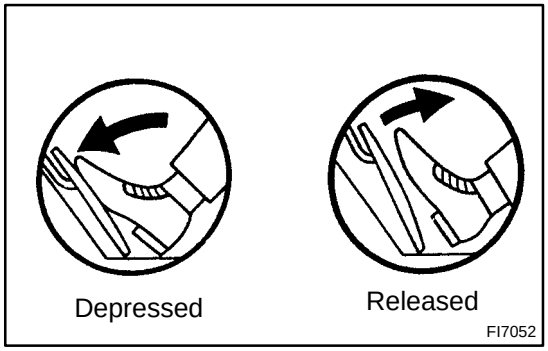

PREPARATION:

(a) Connect the hand−held tester to the DLC3.

(b) Turn the ignition switch ON and push the hand−held tester main switch ON.

(c) Enter the following menu: DIAGNOSIS / ENHANCED OBD II / DATA LIST / ETCS / ACCEL POS #1 and ACCEL POS #2.

CHECK:

Read the voltage for the accelerator pedal position sensor data.

OK:

Standard:

Accelerator pedal	ACCEL POS #1	ACCEL POS #2
Released	0.5 to 1.1 V	1.2 to 2.0 V
Depressed	2.6 to 4.5 V	3.4 to 5.3 V

OK	**Go to step 5.**

NG

2	**Check for open and short in harness and connector in VCPA, VCP2, VPA, VPA2 EPA and EPA2 circuit between ECM and accelerator pedal position sensor.**

Wire Harness Side:
Accelerator Pedal Position Sensor

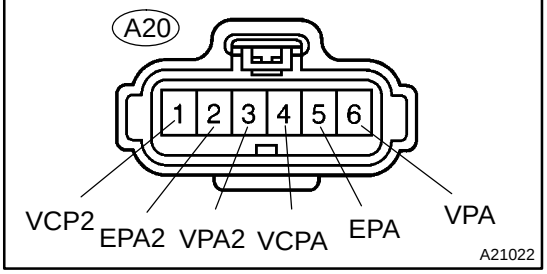

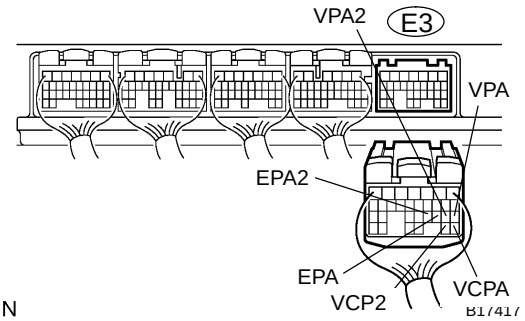

PREPARATION:

(a) Disconnect the A20 accelerator pedal position sensor connector.

(b) Disconnect the E3 ECM connector.

CHECK:

Measure the resistance between the wire harness side connectors.

OK:

Standard:

Tester Connection	Specified Condition
VPA (A20−6) − VPA (E3−18)	Below 1 Ω
EPA (A20−5) − EPA (E3−20)	Below 1 Ω
VCPA (A20−4) − VCPA (E3−26)	Below 1 Ω
VPA2 (A20−3) − VPA2 (E3−19)	Below 1 Ω
EPA2 (A20−2) − EPA2 (E3−21)	Below 1 Ω
VCP2 (A20−1) − VCP2 (E3−27)	Below 1 Ω
VPA (A20−6) or VPA (E3−18) − Body ground	10 kΩ or higher
EPA (A20−5) or EPA (E3−20) − Body ground	10 kΩ or higher
VCPA (A20−4) or VCPA (E3−26) − Body ground	10 kΩ or higher
VPA2 (A20−3) or VPA2 (E3−19) − Body ground	10 kΩ or higher
EPA2 (A20−2) or EPA2 (E3−21) − Body ground	10 kΩ or higher
VCP2 (A20−1) or VCP2 (E3−27) − Body ground	10 kΩ or higher

NG → **Repair or replace harness and connector.**

OK

3	Check voltage between terminals VCPA and EPA, and VCP2 and EPA2 of ECM terminals.

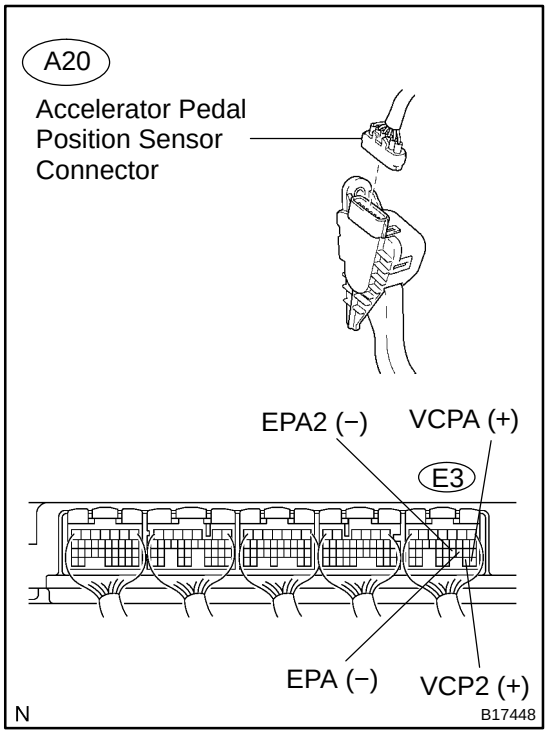

PREPARATION:

(a) Turn the ignition switch ON.

(b) Disconnect the A20 accelerator pedal position sensor connector.

CHECK:

Measure the voltage between the specified terminals of the E3 ECM connector.

OK:

Standard:

Tester Connection	Specified Condition
VCPA (E3−26) − EPA (E3−20)	4.5 to 5.5 V
VCP2 (E3−27) − EPA2 (E3−21)	4.5 to 5.5 V

NG → **Replace ECM (See page SF−82).**

OK

4	Replace accelerator pedal assembly (See page SF−80).

Go

5	**Check whether DTC output recurs (DTC P2120, P2122, P2123, P2125, P2127, P2128 or P2138)**

PREPARATION:

(a) Connect the hand−held tester to the DLC3.
(b) Disconnect the battery terminals or remove the EFI No. 1 fuse and ETCS fuse (Clear DTCs).
(c) Start the engine.
(d) Drive the engine at idle for 15 seconds or more.
(e) On the hand−held tester, select the following menu items: DIAGNOSIS / ENHANCED OBD II / DTC INFO / PENDING CODES.

CHECK:

Read the DTC output.

RESULT:

Display (DTC Output)	Proceed To
P2120, P2122, P2123,P2125, P2127, P2128 or P2138	A
No output	B

B → **System is OK.**

A

Replace ECM (See page SF−82).

DIDS4−01

DTC	**P2195**	**Oxygen (A/F) Sensor Signal Stuck Lean (Bank 1 Sensor 1)**

DTC	**P2196**	**Oxygen (A/F) Sensor Signal Stuck Rich (Bank 1 Sensor 1)**

DTC	**P2197**	**Oxygen (A/F) Sensor Signal Stuck Lean (Bank 2 Sensor 1)**

DTC	**P2198**	**Oxygen (A/F) Sensor Signal Stuck Rich (Bank 2 Sensor 1)**

HINT:

- Although the DTC titles say oxygen sensor, these DTCs relate to the Air−Fuel Ratio (A/F) sensor.
- Sensor 1 refers to the sensor mounted in front of the Three−Way Catalytic Converter (TWC) and located near the engine assembly.

CIRCUIT DESCRIPTION

The A/F sensor generates a voltage* that corresponds to the actual air−fuel ratio. This sensor voltage is used to provide the ECM with feedback so that it can control the air−fuel ratio. The ECM determines the deviation from the stoichiometric air−fuel ratio level, and regulates the fuel injection time. If the A/F sensor malfunctions, the ECM is unable to control the air−fuel ratio accurately.

The A/F sensor is the planar type and is integrated with the heater, which heats the solid electrolyte (zirconia element). This heater is controlled by the ECM. When the intake air volume is low (the exhaust gas temperature is low), a current flows into the heater to heat the sensor, in order to facilitate accurate air−fuel ratio detection. In addition, the sensor and heater portions are narrower than the conventional type. The heat generated by the heater is conducted to the solid electrolyte though the alumina, therefore the sensor activation is accelerated.

In order to obtain a high purification rate of the carbon monoxide (CO), hydrocarbon (HC) and nitrogen oxide (NOx) components in the exhaust gas, a TWC is used. For the most efficient use of the TWC, the air−fuel ratio must be precisely controlled so that it is always close to the stoichiometric level.

*: Value changes inside the ECM. Since the A/F sensor is the current output element, a current is converted to a voltage inside the ECM. Any measurements taken at the A/F sensor or ECM connectors will show a constant voltage.

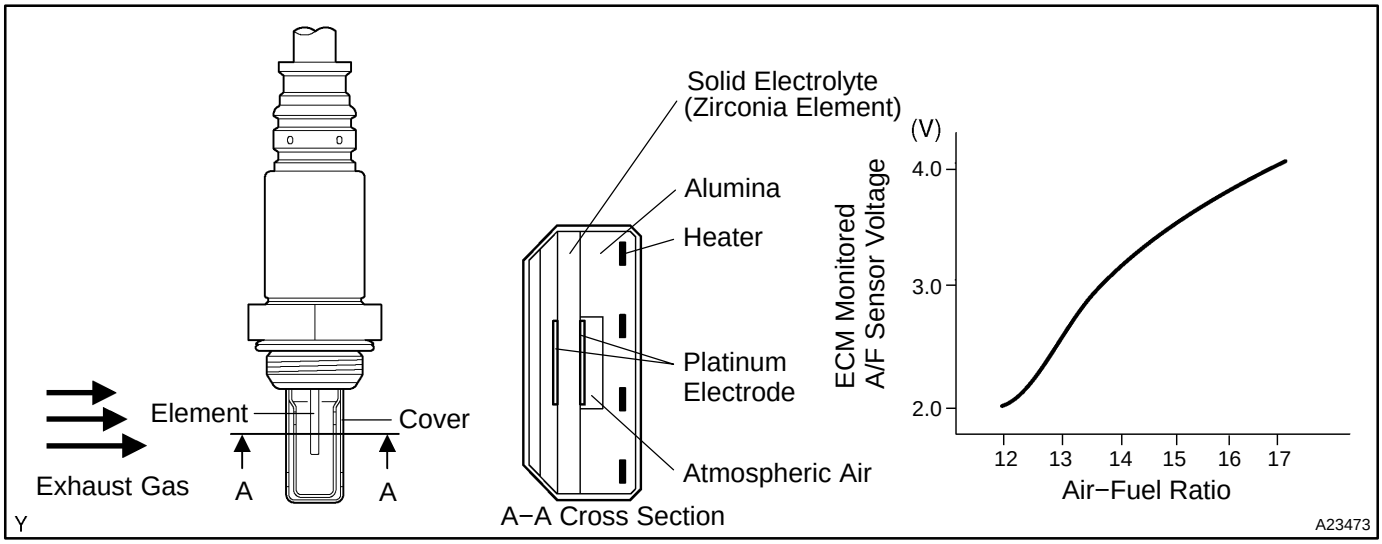

DTC No.	DTC Detection Conditions	Trouble Areas
P2195 P2197	While fuel−cut operation (during vehicle deceleration), air−fuel ratio sensor current is 3.6 mA or more for 3 seconds.	• A/F sensor (sensor 1) • ECM
P2195	Conditions (a) and (b) continue for 2 seconds or more (2 trip detection logic): (a) Air−Fuel Ratio (A/F) sensor voltage more than 3.8 V (b) Heated Oxygen (HO2) sensor voltage 0.15 V or more	• Open or short in A/F sensor (sensor 1) circuit • A/F sensor (sensor 1) • A/F sensor (sensor 1) heater • EFI relay • A/F sensor heater and relay circuits • Air induction system • Fuel pressure • Injector • ECM
P2196 P2198	While fuel−cut operation (during vehicle deceleration), air−fuel ratio sensor current is less than 1.4 mA for 3 seconds.	• A/F sensor (sensor 1) • ECM
P2196	Conditions (a) and (b) continue for 2 seconds or more (2 trip detection logic): (a) A/F sensor voltage less than 2.8 V (b) HO2 sensor voltage less than 0.85 V	• Open or short in A/F sensor (sensor 1) circuit • A/F sensor (sensor 1) • A/F sensor (sensor 1) heater • EFI relay • A/F sensor heater and relay circuits • Air induction system • Fuel pressure • Injector • ECM

HINT:

- When any of these DTCs are set, check the A/F sensor voltage output by selecting the following menu items on a hand−held tester: DIAGNOSIS / ENHANCED OBD II / DATA LIST / ALL / AFS B1S1.
- Short−term fuel trim values can also be read using a hand−held tester.
- The ECM regulates the voltage at the A1A+ and A1A− terminals of the ECM at a constant level. Therefore, the A/F sensor voltage output cannot be confirmed without using a hand−held tester.
- If the A/F sensor functional malfunction is detected, the ECM sets this DTC.

MONITOR DESCRIPTION

- Sensor voltage detection monitor:
  Under the air−fuel ratio feedback control, if the A/F sensor voltage output indicates rich or lean for a certain period of time, the ECM determines that there is a malfunction in the A/F sensor. The ECM illuminates the MIL and sets a DTC.
  Example:
  If the A/F sensor voltage output is less than 2.8 V (very rich condition) for 10 seconds, despite the HO2 sensor voltage output being less than 0.85 V, the ECM sets DTC P2196. Alternatively, if the A/F sensor voltage output is more than 3.8 V (very lean condition) for 10 seconds, despite the HO2 sensor voltage output being 0.15 V or more, DTC P2195 or P2197 is set.

- Sensor current detection monitor:
  A rich air−fuel mixture causes a low air−fuel ratio sensor current, and a lean air fuel mixture causes a high air−fuel ratio sensor current. Therefore, the sensor output becomes high during acceleration, and the sensor becomes low during deceleration.
  The ECM monitors the air−fuel ratio sensor current during fuel−cut and detects unusual current value. If the cumulative time the sensor output is out of range exceeds 3 seconds, the ECM interprets a malfunction in the air−fuel ratio sensor and sets a DTC.

Air−fuel Ratio Sensor Current Monitor:

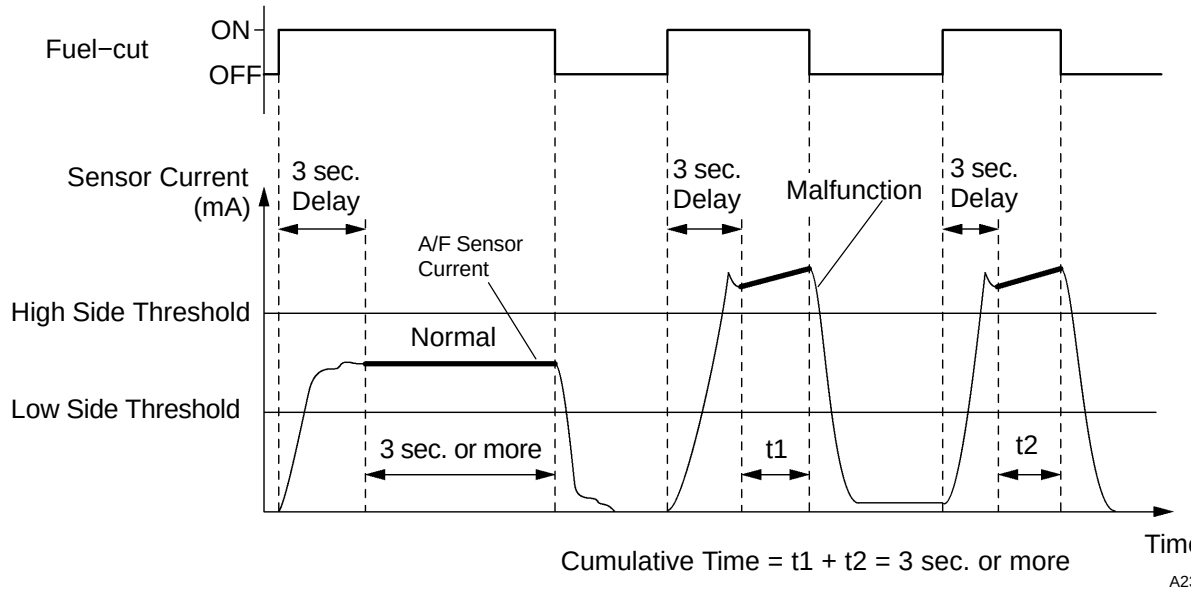

MONITOR STRATEGY

Related DTCs	P2195	A/F sensor (Bank 1) signal stuck lean
		A/F sensor (Bank 1) current (high side)
	P2196	A/F sensor (Bank 1) signal stuck rich
		A/F sensor (Bank 1) current (low side)
	P2197	A/F sensor (Bank 2) signal stuck lean
		A/F sensor (Bank 2) current (high side)
	P2198	A/F sensor (Bank 2) signal stuck rich
		A/F sensor (Bank 2) current (low side)
Required sensors/components	A/F sensor	
Frequency of operation	Once per driving cycle	
Duration	15 sec.: A/F sensor signal stuck lean/rich 3 sec.: A/F sensor current (high/low side)	
MIL operation	2 driving cycles	
Sequence of operation	None	

TYPICAL ENABLING CONDITIONS

Item	Specification	
	Minimum	Maximum
The monitor will run whenever these DTCs are not present	See page DI−437	
P2195, P2197 (A/F sensor signal stuck lean):		
Duration while all of following conditions met	2 sec.	−
Rear HO2S voltage	0.15 V	−
Time after engine start	30 sec.	−
A/F sensor status	Activated	
Fuel system status	Closed−loop	
Engine	Running	
P2196, P2198 (A/F sensor signal stuck rich):		
Duration while all of following conditions met	2 sec.	−
Rear HO2S voltage	−	0.6 V
Time after engine start	30 sec.	−
A/F sensor status	Activated	
Fuel system status	Closed−loop	
Engine	Running	
P2195, P2197 (A/F sensor current (High side)):		
Battery voltage	11 V	−
ECT	75°C (167°F)	−
Atmospheric pressure/760 mmHg	0.75	−
A/F sensor status	Activated	
Continuous time of fuel−cut	3 to 10 sec.	
P2196, P2198 (A/F sensor current (Low side)):		
Battery voltage	11 V	−
ECT	75°C (167°F)	−
Atmospheric pressure/760 mmHg	0.75	−
A/F sensor status	Activated	
Continuous time of fuel−cut	3 to 10 sec.	

TYPICAL MALFUNCTION THRESHOLDS

Detection Criteria	Threshold
P2195, P2197 (A/F sensor signal stuck lean):	
A/F sensor voltage	More than 3.8 V
P2196, P2198 (A/F sensor signal stuck rich):	
A/F sensor voltage	Less than 2.8 V
P2195, P2197 (A/F sensor current (High side)):	
A/F sensor current	3.6 mA or more
P2196, P2198 (A/F sensor current (Low side)):	
A/F sensor current	Less than 1.4 mA

MONITOR RESULT

Refer to page DI−445 for detailed information.

The test value and test limit information are described as shown in the following table. Check the monitor result and test values after performing the monitor drive pattern (refer to ”Confirmation Monitor”).

- MID (Monitor Identification Data) is assigned to each emissions−related component.
- TID (Test Identification Data) is assigned to each test value.

A/F sensor bank 1 sensor 1

MID	TID	Scaling	Description of Test Value	Minimum Test Limit	Maximum Test Limit
$01	$91	Multiply by 0.003906 (mA)	A/F current	Minimum test limit	Maximum test limit

A/F sensor bank 2 sensor 1

MID	TID	Scaling	Description of Test Value	Minimum Test Limit	Maximum Test Limit
$05	$91	Multiply by 0.003906 (mA)	A/F current	Minimum test limit	Maximum test limit

WIRING DIAGRAM

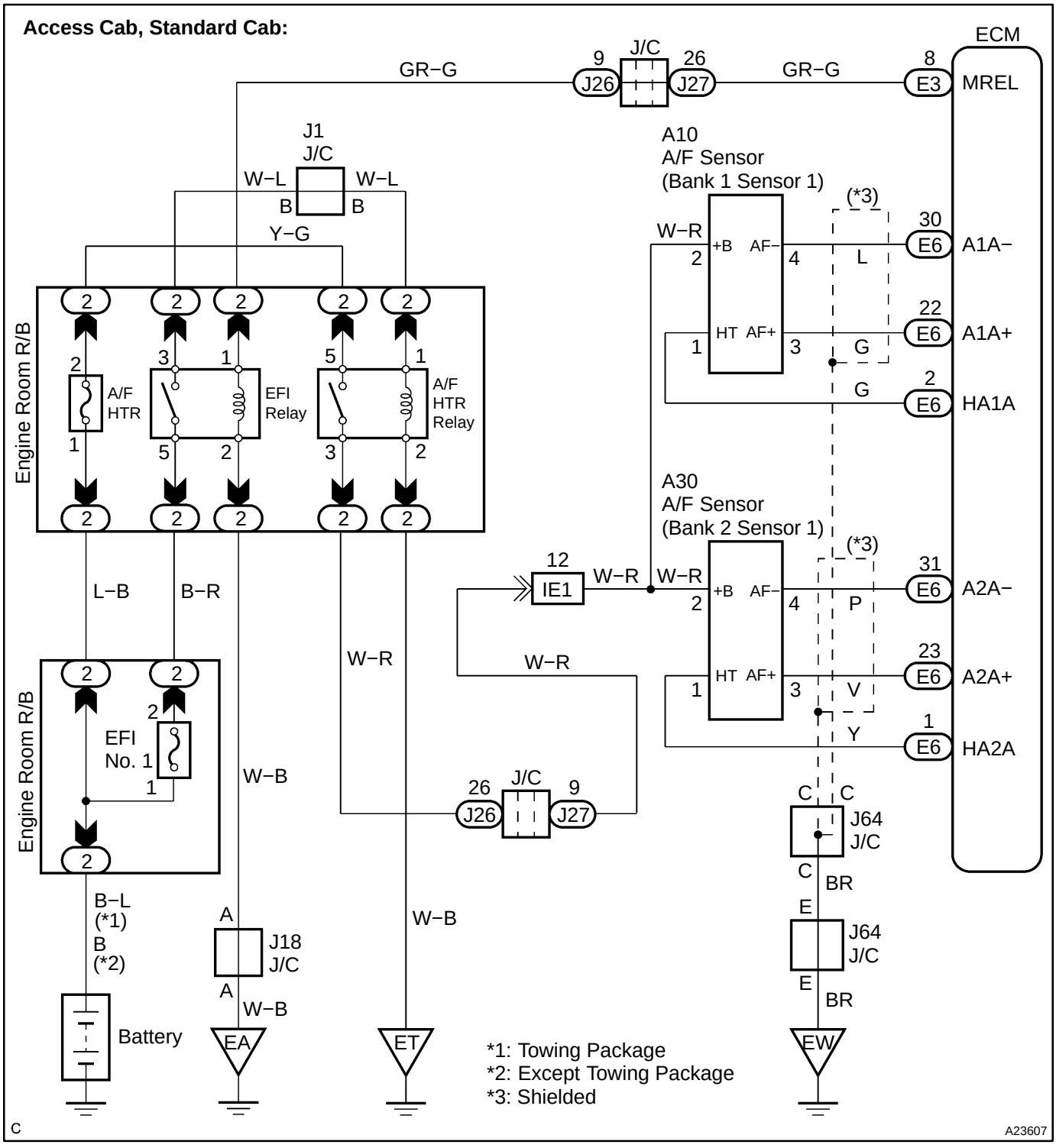

Double Cab:

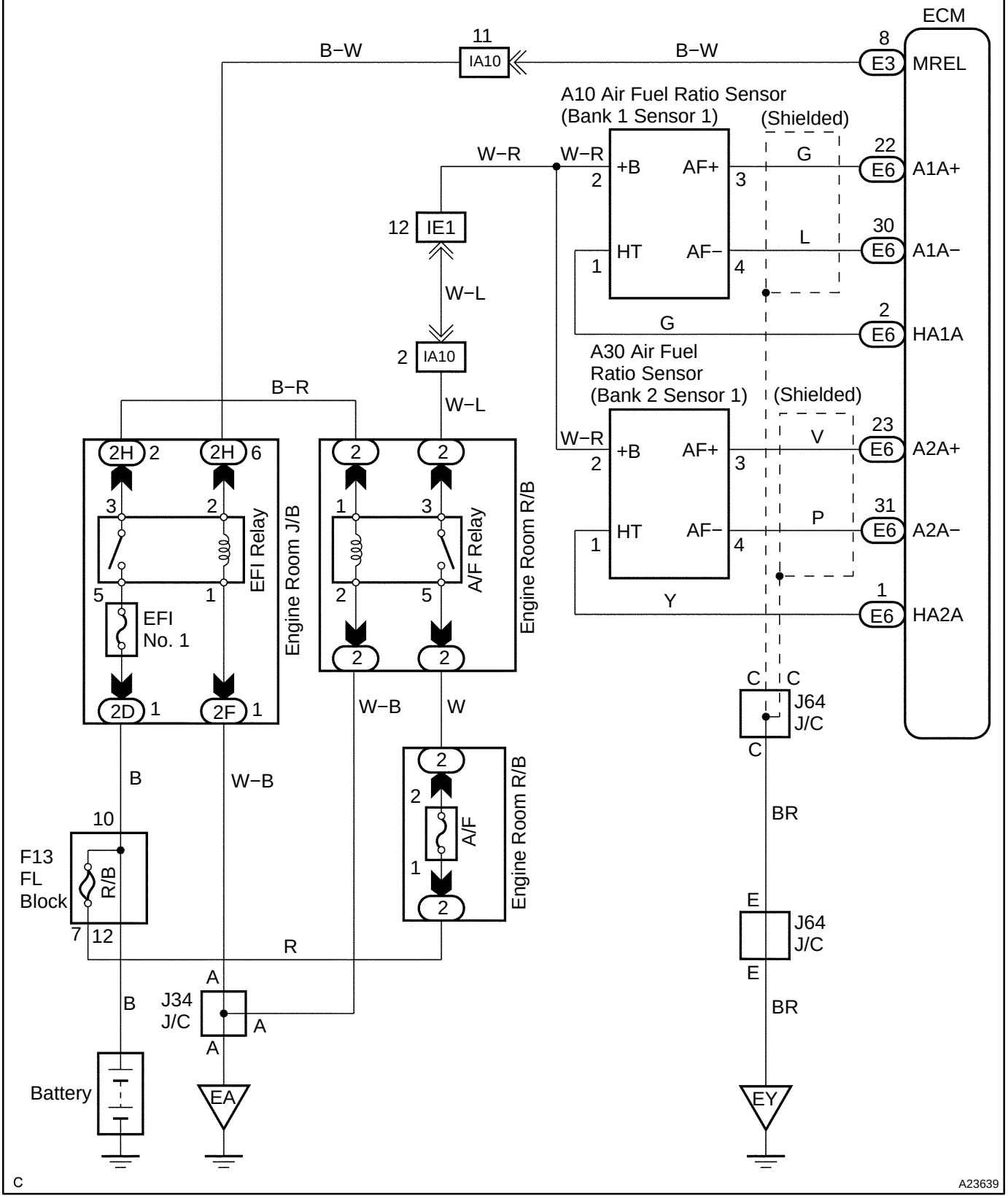
ECM
11
IA10
B−W
B−W
8
E3
MREL
A10 Air Fuel Ratio Sensor
(Bank 1 Sensor 1)
(Shielded)
W−R
W−R
+B
AF+
2
3
G
22
E6
A1A+
12
IE1
HT
AF−
1
4
L
30
E6
A1A−
W−L
G
2
E6
HA1A
2
IA10
A30 Air Fuel
Ratio Sensor
(Bank 2 Sensor 1)
(Shielded)
B−R
W−L
W−R
+B
AF+
2
3
V
23
E6
A2A+
2H
2
2H
6
3
2
HT
AF−
1
4
P
31
E6
A2A−
EFI Relay
Engine Room J/B
5
1
EFI
No. 1
Y
1
E6
HA2A
2
2
1
3
A/F Relay
Engine Room R/B
2
5
2
2
C
C
J64
J/C
C
2D
1
2F
1
W−B
W
B
W−B
2
2
A/F
1
2
Engine Room R/B
BR
10
F13
FL
Block
R/B
7
12
R
E
J64
J/C
E
BR
A
B
J34
J/C
A
A
Battery
EA
EY
C
A23639

CONFIRMATION DRIVING PATTERN

HINT:

This confirmation driving pattern is used in steps 2, 4, 7, 17 and 21 of the following diagnostic troubleshooting procedure when using a hand−held tester.

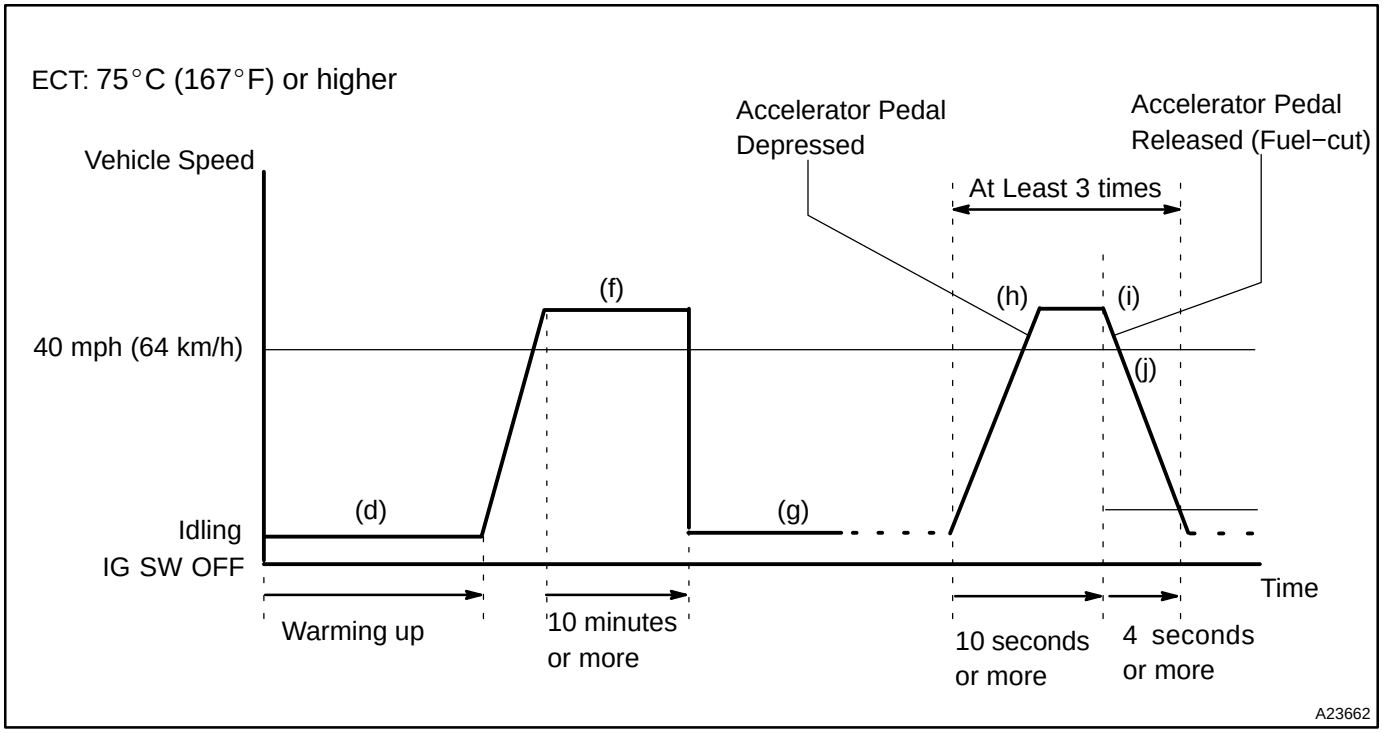

(a) Connect the hand−held tester to DLC3.
(b) Turn the ignition switch to ON and turn the tester ON.
(c) Clear DTCs (see page DI−462).
(d) Start the engine, and warm it up until the ECT reaches 75°C (167°F) or higher.
(e) On the hand−held tester, select the following menu items: DIAGNOSIS/ENHANCED OBD II/DATA LIST/FC IDL.
(f) Drive the vehicle at 40 mph (64 km/h) or more for at least 10 minutes.
(g) Change the transmission to 2nd gear.
(h) Drive the vehicle at an appropriate speed to perform fuel−cut operation.

HINT:

Fuel−cut is performed when the following conditions met:

- Accelerator pedal is fully released.
- Engine speed is 2,500 rpm or more (fuel injection returns at 1,000 rpm).

(i) Accelerate the vehicle to 30 mph (48 km/h) or more by depressing the accelerator pedal for at least 10 seconds.
(j) Soon after performing step (8) above, release the accelerator pedal for at least 4 seconds without depressing the brake pedal, in order to execute fuel−cut control.
(k) Stop the vehicle and allow the engine to idle for 10 seconds or more.
(l) Allow the vehicle to decelerate until the vehicle speed declines to less than 6 mph (10 km/h).
(m) Repeat steps from (8) through (10) above at least 3 times in one driving cycle.

HINT:

Completing all A/F sensor monitors are required to change the value in TEST RESULT.

CAUTION:

Strictly observe the posted speed limits, traffic laws, and road conditions when performing these driving patterns.

INSPECTION PROCEDURE

HINT:

Malfunctioning areas can be identified by performing the A/F CONTROL function provided in the ACTIVE TEST. The A/F CONTROL function can help to determine whether the Air−Fuel Ratio (A/F) sensor, Heated Oxygen (HO2) sensor and other potential trouble areas are malfunctioning.

The following instructions describe how to conduct the A/F CONTROL operation using a hand−held tester.

(1) Connect a hand−held tester to the DLC3.
(2) Start the engine and turn the tester ON.
(3) Warm up the engine at an engine speed of 2,500 rpm for approximately 90 seconds.
(4) On the tester, select the following menu items: DIAGNOSIS / ENHANCED OBD II / ACTIVE TEST / A/F CONTROL.
(5) Perform the A/F CONTROL operation with the engine in an idling condition (press the RIGHT or LEFT button to change the fuel injection volume).
(6) Monitor the voltage outputs of the A/F and HO2 sensors (AFS B1S1 (AFS B2S1) and OS2 B1S2 (O2S B2S2)) displayed on the tester.

HINT:

- The A/F CONTROL operation lowers the fuel injection volume by 12.5 % or increases the injection volume by 25 %.
- Each sensor reacts in accordance with increases and decreases in the fuel injection volume.

Standard:

Tester Display (Sensor)	Injection Volumes	Status	Voltages
AFS B1S1 (AFS B2S1) (A/F)	+25 %	Rich	Less than 3.0
AFS B1S1 (AFS B2S1) (A/F)	−12.5 %	Lean	More than 3.35
O2S B1S2 (O2S B2S2) (HO2)	+25 %	Rich	More than 0.55
O2S B1S2 (O2S B2S2) (HO2)	−12.5 %	Lean	Less than 0.4

NOTICE:
The Air−Fuel Ratio (A/F) sensor has an output delay of a few seconds and the Heated Oxygen (HO2) sensor has a maximum output delay of approximately 20 seconds.

Case	A/F Sensor (Sensor 1) Output Voltage	HO2 Sensor (Sensor 2) Output Voltage	Main Suspected Trouble Areas
1	Injection volume +25 % −12.5 % Output voltage More than 3.35 V Less than 3.0 V **OK**	Injection volume +25 % −12.5 % Output voltage More than 0.55 V Less than 0.4V **OK**	—
2	Injection volume +25 % −12.5 % Output voltage Almost no reaction **NG**	Injection volume +25 % −12.5 % Output voltage More than 0.55 V Less than 0.4V **OK**	● A/F sensor ● A/F sensor heater ● A/F sensor circuit
3	Injection volume +25 % −12.5 % Output voltage More than 3.35 V Less than 3.0V **OK**	Injection volume +25 % −12.5 % Output voltage Almost no reaction **NG**	● HO2 sensor ● HO2 sensor heater ● HO2 sensor circuit
4	Injection volume +25 % −12.5 % Output voltage Almost no reaction **NG**	Injection volume +25 % −12.5 % Output voltage Almost no reaction **NG**	● Injector ● Fuel pressure ● Gas leakage from exhaust system (Air−fuel ratio extremely lean or rich)

- Following the A/F CONTROL procedure enables technicians to check and graph the voltage outputs of both the A/F and HO2 sensors.
- To display the graph, select the following menu items on the tester: DIAGNOSIS / ENHANCED OBD II / ACTIVE TEST / A/F CONTROL / USER DATA / AFS B1S1 and O2S B1S2, and press the YES button and then the ENTER button followed by the F4 button.

HINT:

- Read freeze frame data using a hand−held tester or OBD II scan tool. Freeze frame data record the engine condition when malfunctions are detected. When troubleshooting, freeze frame data can help determine if the vehicle was moving or stationary, if the engine was warmed up or not, if the air−fuel ratio was lean or rich, and other data, from the time the malfunction occurred.
- A low A/F sensor voltage could be caused by a rich air−fuel mixture. Check for conditions that would cause the engine to run rich.
- A high A/F sensor voltage could be caused by a lean air−fuel mixture. Check for conditions that would cause the engine to run lean.

1	**Check any other DTCs output (in addition to DTC P2195, P2196, P2197 or P2198).**

PREPARATION:

(a) Connect a hand−held tester to the DLC3.
(b) Turn the ignition switch to ON and turn the tester ON.
(c) Select the following menu items: DIAGNOSIS / ENHANCED OBD II / DTC INFO / CURRENT CODES.

CHECK:

(a) Read DTCs.
Result:

Display (DTC Output)	Proceed To
P2195, P2196, P2197 or P2198	A
P2195, P2196, P2197 or P2198 and other DTCs	B

HINT:
If any DTCs other than P2195, P2196, P2197 or P2198 are output, troubleshoot those DTCs first.

B → **Go to relevant DTC chart (See page DI−477).**

A

2	**Check A/F sensor output current.**

PREPARATION:

(a) Connect a hand−held tester to the DLC3.
(b) Turn the ignition switch to ON and turn the tester ON.
(c) Clear DTCs (see page DI−462).
(d) On the hand−held tester, select the following menu items: DIAGNOSIS/ENHANCED OBD II/MONITOR INFO/MONITOR STATUS.
(e) Check that the status of O2S MON is COMPL.
(f) On the hand−held tester, select the following menu items: DIAGNOSIS/ENHANCED OBD II/MONITOR INFO/TEST RESULT/RANGE BISI and B2S1.
(g) Check the test value of the air−fuel ratio sensor output current during fuel−cut.

RESULT:

Test Value	Proceed to
Out of normal range (1.4 mA or more, and less than 3.6 mA)	A
Within normal range (Less than 1.4 mA, or 3.6 mA or more)	B

B → **Go to step 20.**

A

3	**Read value output voltage of A/F sensor.**

PREPARATION:

(a) Connect the hand−held tester to the DLC3.
(b) Start the engine and turn the scan tool ON.
(c) Warm up the Air−Fuel Ratio (A/F) sensor at an engine speed of 2,500 rpm for 90 seconds.

CHECK:

(a) Using the scan tool, check the A/F sensor voltage 3 times, once when the engine is in each of the following conditions:
  (1) While idling (check for at least 30 seconds)
  (2) At an engine speed of approximately 2,500 rpm (without any sudden changes in engine speed)
  (3) Raise the engine speed to 4,000 rpm and then quickly release the accelerator pedal so that the throttle valve is fully closed.

  Standard:

Conditions	A/F Sensor Voltage Variations	Reference
(1) and (2)	Changes at approx 0.66 V	Between 0.62 V and 0.7 V
(3)	Increases to 0.76 V or more	This occurs during engine deceleration (when fuel−cut performed)

For more information, see the diagrams below.

Normal Condition:

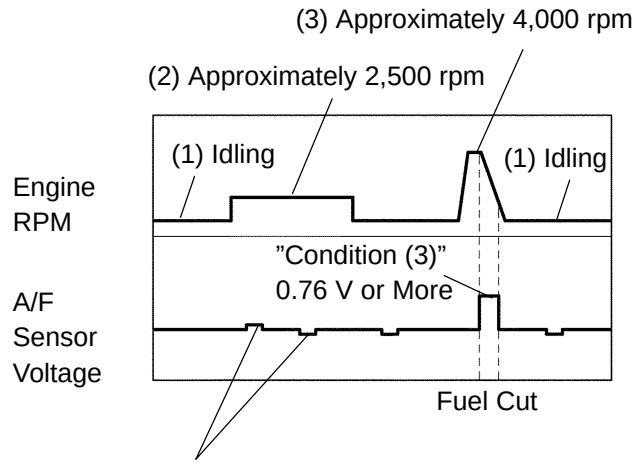

Malfunction Condition:

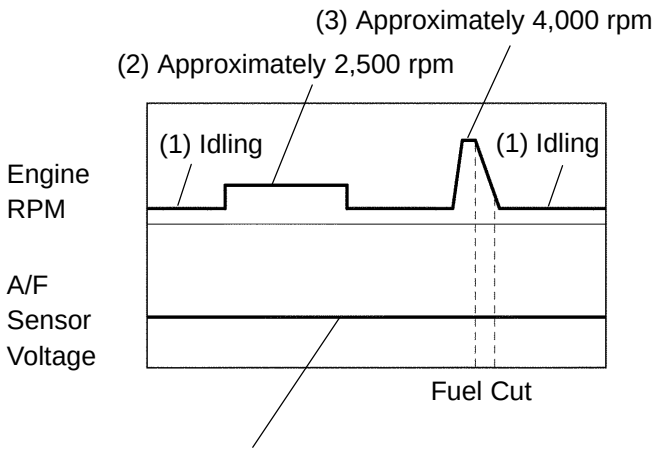

B17393

HINT:

- If the output voltage of the A/F sensor remains at approximately 0.66 V (see Malfunction Condition diagram) under any conditions, including those above, the A/F sensor may have an open circuit. (This will also happen if the A/F sensor heater has an open circuit.)
- If the output voltage of the A/F sensor remains at either approximately 0.76 V or more, or 0.56 V or less (see Malfunction Condition diagram) under any conditions, including those above, the A/F sensor may have a short circuit.
- The ECM stops fuel injection (fuel cut) during engine deceleration. This causes a lean condition and results in a momentary increase in the A/F sensor output voltage.

- The ECM must establish a closed throttle valve position learning value to perform fuel cut. If the battery terminal has been reconnected, the vehicle must be driven over 10 mph (16 km/h) to allow the ECM to learn the closed throttle valve position.
- When the vehicle is driven:
  The output voltage of the A/F sensor may be below 0.56 V during fuel enrichment. For the vehicle, this translates to a sudden increase in speed with the accelerator pedal fully depressed when trying to overtake another vehicle. The A/F sensor is functioning normally.
- The A/F sensor is a current output element; therefore, the current is converted into a voltage inside the ECM. Measuring the voltage at the connectors of the A/F sensor or ECM will show a constant voltage result.

NG → **Go to step 9.**

OK

4	**Perform confirmation driving pattern.**

NEXT

5	**Check whether DTC output recurs (DTC P2195, P2196, P2197 or P2198)**

CHECK:

(a) On the hand−held tester, select the following menu items: DIAGNOSIS / ENHANCED OBD II / DTC INFO / PENDING CODES.

(b) Read DTCs.

RESULT:

Display (DTC Output)	Proceed To
P2195, P2196, P2197 or P2198	A
No output	B

B → **Go to step 5.**

A

6	**Replace air fuel ratio sensor.**

NEXT

7	**Perform confirmation driving pattern.**

NEXT

8	**Check whether DTC output recurs (DTC P2195, P2196, P2197 or P2198)**

CHECK:

(a) On the hand−held tester, select the following menu items: DIAGNOSIS / ENHANCED OBD II / DTC INFO / PENDING CODES.

(b) Read DTCs.

RESULT:

Display (DTC Output)	Proceed To
P2195, P2196, P2197 or P2198	A
No output	B

B → **Go to step 5.**

A

9	**Confirm whether vehicle has run out of fuel in past.**

NO → **Check for intermittent problems (See page DI−430).**

YES

DTC caused by running out of fuel.

10	Check resistance of air−fuel ratio (A/F) sensor heater.

Component Side:

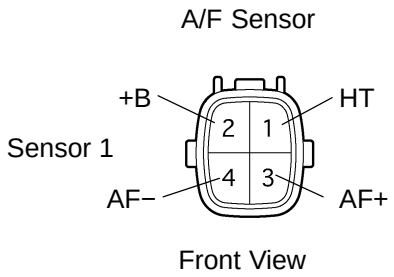

PREPARATION:

Disconnect the air−fuel ratio (A/F) sensor connector.

CHECK:

Measure resistance between the terminals of the A/F sensor connector.

OK:

Tester Connection	Specified Condition
HT (1) − +B (2)	Between 1.8 Ω and 3.4 Ω at 20°C (68°F)
HT (1) − AF− (4)	10 kΩ or higher

NG → **Replace air−fuel ratio (A/F) sensor.**

OK

11	Check A/F relay.

A/F Relay

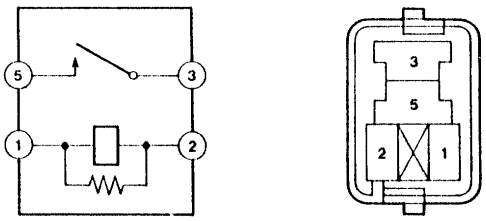

PREPARATION:

Remove the A/F relay from the engine room J/B.

CHECK:

Inspect the A/F relay.

OK:

Standard:

Terminal No.	Condition	Specified Condition
3 − 5	Always	10 KΩ or higher
3 − 5	Apply B+ between terminals 1 and 2	Below 1 Ω

NG → **Replace EFI relay.**

OK

12	Check for open and short in harness and connector between ECM and A/F sensor.

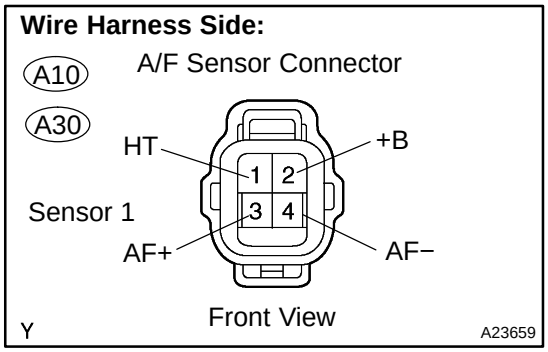

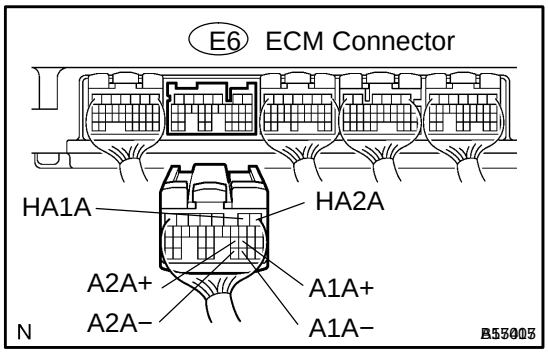

PREPARATION:

(a) Disconnect the A10 or A30 A/F sensor connector.
(b) Turn the ignition switch to ON.

CHECK:

(a) Measure the voltage between the +B terminal of the A/F sensor connector and body ground.

Standard:

Tester Connections	Specified Conditions
+B (2) − Body ground	Between 9 V and 14 V

PREPARATION:

(a) Turn the ignition switch to OFF.
(b) Disconnect the E6 ECM connector.

CHECK:

(a) Check the resistance.

Standard (Check for open):

Tester Connections	Specified Conditions
HT (A10−1) − HA1A (E6−2) HT (A30−1) − HA2A (E6−1)	Below 1 Ω
AF+ (A10−3) − A1A+ (E6−22) AF+ (A30−3) − A2A+ (E6−23)	Below 1 Ω
AF− (A10−4) − A1A− (E6−30) AF− (A30−4) − A2A− (E6−31)	Below 1 Ω

Standard (Check for short):

Tester Connections	Specified Conditions
HT (A10−1) or HA1A (E6−2) − Body ground HT (A30−1) or HA2A (E6−1) − Body ground	10 kΩ or higher
AF+ (A10−3) or A1A+ (E6−22) − Body ground AF+ (A30−3) or A2A+ (E6−23) − Body ground	10 kΩ or higher
AF− (A10−4) or A1A− (E6−30) − Body ground AF− (A30−4) or A2A− (E6−31) − Body ground	10 kΩ or higher

Reference (Bank 1 Sensor 1 System Drawing):

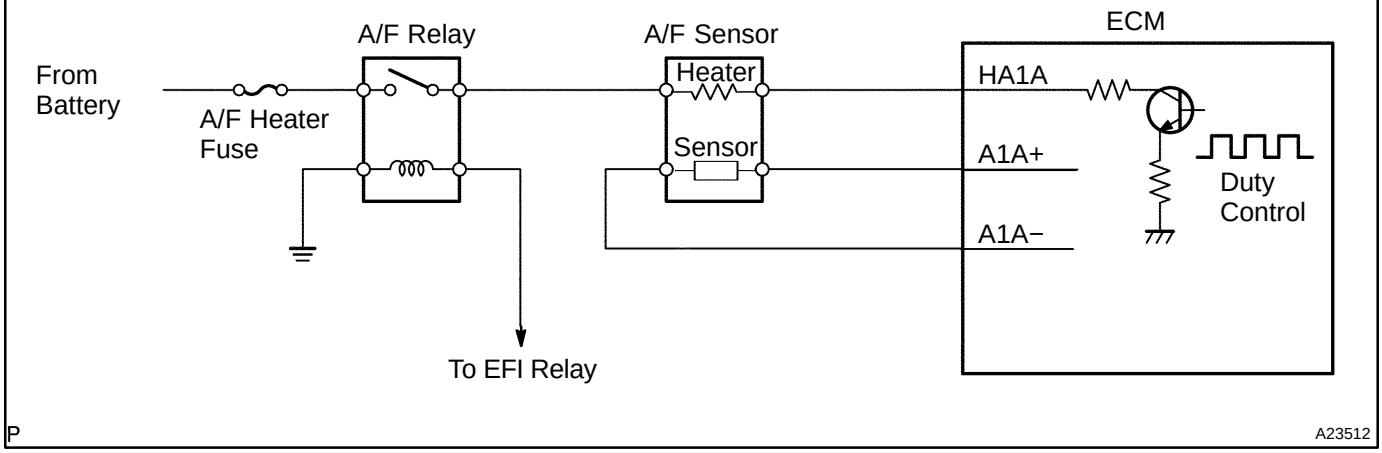

NG → Replace or replace harness or connector.

OK

13	Check air induction system (See page SF−1).

CHECK:
Check the air induction system for vacuum leaks.

NG → Repair or replace air induction system.

OK

14	Check fuel pressure (See page SF−7).

CHECK:
Check the fuel pressure (high or low pressure).

NG → Check and replace fuel pump, pressure regulator, fuel pipe line and filter (See page SF−1).

OK

15	Check injector injection (See page SF−29).

NG → Replace injector.

OK

16	**Replace air fuel ratio sensor.**

NEXT

17	**Perform confirmation driving pattern.**

NEXT

18	**Check whether DTC output recurs (DTC P2195, P2196, P2197 or P2198)**

CHECK:

(a) On the hand−held tester, select the following menu items: DIAGNOSIS / ENHANCED OBD II / DTC INFO / PENDING CODES.

(b) Read DTCs.

RESULT:

Display (DTC Output)	Proceed To
P2195, P2196, P2197 or P2198	A
No output	B

B → **Replace ECM (See page SF−82) and perform confirmation driving pattern.**

A

19	**Confirm whether vehicle has run out of fuel in past.**

NO → **Check for intermittent problems (See page DI−430).**

YES

DTC caused by running out of fuel.

20	**Replace air fuel ratio sensor.**

NEXT

21	**Perform confirmation driving pattern.**

NEXT

22	**Check whether DTC output recurs (DTC P2195, P2196, P2197 or P2198)**

CHECK:

(a) On the hand−held tester, select the following menu items: DIAGNOSIS / ENHANCED OBD II / DTC INFO / PENDING CODES.

(b) Read DTCs.

RESULT:

Display (DTC Output)	Proceed To
P2195, P2196, P2197 or P2198 (A/F sensor pending DTCs)	A
No output	B

B → **Replace ECM (See page SF−82).**

A

END

DIDS5−01

DTC	P2238	Oxygen Sensor Pumping Current Circuit Low (For A/F Sensor)(Bank 1 Sensor1)

DTC	P2239	Oxygen Sensor Pumping Current Circuit High (For A/F Sensor)(Bank 1 Sensor1)

DTC	P2241	Oxygen Sensor Pumping Current Circuit Low (For A/F Sensor)(Bank 2 Sensor1)

DTC	P2242	Oxygen Sensor Pumping Current Circuit High (For A/F Sensor)(Bank 2 Sensor1)

DTC	P2252	Oxygen Sensor Reference Ground Circuit Low (For A/F Sensor)(Bank 1 Sensor1)

DTC	P2253	Oxygen Sensor Reference Ground Circuit High (For A/F Sensor)(Bank 1 Sensor1)

DTC	P2255	Oxygen Sensor Reference Ground Circuit Low (For A/F Sensor)(Bank 2 Sensor1)

DTC	P2256	Oxygen Sensor Reference Ground Circuit High (For A/F Sensor)(Bank 2 Sensor1)

HINT:

- Although the DTC titles say oxygen sensor, these DTCs relate to the Air−Fuel Ratio (A/F) sensor.
- Sensor 1 refers to the sensor mounted in front of the Three−Way Catalytic Converter (TWC) and located near the engine assembly.

CIRCUIT DESCRIPTION

Refer to DTC P2195 on page DI−806.

DTC No.	DTC Detection Conditions	Trouble Areas
P2238 P2241	• Case 1: Condition (a) or (b) continues for 5.0 seconds or more (1 trip detection logic): (a) AF+ voltage 0.5 V or less (b) (AF+) − (AF−) = 0.1 V or less • Case 2: A/F sensor admittance: Less than 0.022 1/Ω (1 trip detection logic)	• Open or short in A/F sensor (sensor 1) circuit • A/F sensor (sensor 1) • A/F sensor heater • EFI relay • A/F sensor heater and relay circuits • ECM
P2239 P2242	AF+ voltage more than 4.5 V for 5.0 seconds or more (1 trip detection logic)	• Open or short in A/F sensor (sensor 1) circuit • A/F sensor (sensor 1) • A/F sensor heater • EFI relay • A/F sensor heater and relay circuits • ECM
P2252 P2255	AF− voltage 0.5 V or less for 5.0 seconds or more (1 trip detection logic)	• Open or short in A/F sensor (sensor 1) circuit • A/F sensor (sensor 1) • A/F sensor heater • EFI relay • A/F sensor heater and relay circuits • ECM
P2253 P2256	AF− voltage more than 4.5 V for 5.0 seconds or more (1 trip detection logic)	• Open or short in A/F sensor (sensor 1) circuit • A/F sensor (sensor 1) • A/F sensor heater • EFI relay • A/F sensor heater and relay circuits • ECM

MONITOR DESCRIPTION

The Air−Fuel Ratio (A/F) sensor varies its output voltage in proportion to the air−fuel ratio. If the A/F sensor impedance (alternating current resistance) or voltage output deviates greatly from the standard range, the ECM determines that there is an open or short malfunction in the A/F sensor circuit.

MONITOR STRATEGY

Related DTCs	P2238	A/F sensor (Bank 1) open circuit between AF+ and AF−
		A/F sensor (Bank 1) short circuit between AF+ and AF−
		A/F sensor (Bank 1) short circuit between AF+ and GND
	P2239	A/F sensor (Bank 1) short circuit between AF+ and +B
	P2241	A/F sensor (Bank 2) open circuit between AF+ and AF−
		A/F sensor (Bank 2) short circuit between AF+ and AF−
		A/F sensor (Bank 2) short circuit between AF+ and GND
	P2242	A/F sensor (Bank 2) short circuit between AF+ and +B
	P2252	A/F sensor (Bank 1) short circuit between AF− and GND
	P2253	A/F sensor (Bank 1) short circuit between AF− and +B
	P2255	A/F sensor (Bank 2) short circuit between AF− and GND
	P2256	A/F sensor (Bank 2) short circuit between AF− and +B
Required sensors/components	A/F sensor	
Frequency of operation	Once per driving cycle	
Duration	10 sec.: A/F sensor open circuit between AF+ and AF− 5 sec.: Others	
MIL operation	Immediate	
Sequence of operation	None	

TYPICAL ENABLING CONDITIONS

Item	Specification	
	Minimum	Maximum
The monitor will run whenever these DTCs are not present	See page DI−437	
P2238, P2241 (A/F sensor open circuit between AF+ and AF−):		
AF+ terminal voltage	0.5 to 4.5 V	
AF− terminal voltage	0.5 to 4.5 V	
Difference between AF+ terminal and AF− terminal voltage	0.1 to 0.8 V	
ECT	0°C (32°F)	−
Engine	Running	
Fuel−cut	OFF	
Time after fuel−cut OFF	5 sec.	−
A/F sensor heater	ON	
Battery voltage	11 V	−
Ignition switch	ON	

Time after ignition switch OFF to ON	5 sec.	−
Others:		
Battery voltage	11 V	−
Ignition switch	ON	
Time after ignition switch OFF to ON	5 sec.	−

TYPICAL MALFUNCTION THRESHOLDS

Detection Criteria	Threshold
P2238, P2241 (A/F sensor open circuit between AF+ and AF−):	
A/F sensor admittance	Bellow 0.022 1/ohm
P2238, P2241 (A/F sensor short circuit between AF+ and GND):	
A/F+ terminal voltage	0.5 V or less
P2238, P2241 (A/F sensor short circuit between AF+ and AF−):	
Difference between A/F+ terminal and AF− terminal voltage	0.1 V or less
P2239, P2242 (A/F sensor short circuit between AF+ and +B):	
A/F+ terminal voltage	More than 4.5 V
P2252, P2255 (A/F sensor short circuit between AF− and GND):	
A/F− terminal voltage	0.5 V or less
P2253, P225+ (A/F sensor short circuit between AF− and +B):	
A/F− terminal voltage	More than 4.5 V

WIRING DIAGRAM

Refer to DTC P2195 on page DI−806.

INSPECTION PROCEDURE

HINT:

Hand−held tester only:

Malfunctioning areas can be identified by performing the A/F CONTROL function provided in the ACTIVE TEST. The A/F CONTROL function can help to determine whether the Air−Fuel Ratio (A/F) sensor, Heated Oxygen (HO2) sensor and other potential trouble areas are malfunctioning.

The following instructions describe how to conduct the A/F CONTROL operation using a hand−held tester.

(1) Connect a hand−held tester to the DLC3.
(2) Start the engine and turn the tester ON.
(3) Warm up the engine at an engine speed of 2,500 rpm for approximately 90 seconds.
(4) On the tester, select the following menu items: DIAGNOSIS / ENHANCED OBD II / ACTIVE TEST / A/F CONTROL.
(5) Perform the A/F CONTROL operation with the engine in an idling condition (press the RIGHT or LEFT button to change the fuel injection volume).
(6) Monitor the voltage outputs of the A/F and HO2 sensors (AFS B1S1 (AFS B2S1) and OS2 B1S2 (O2S B2S2)) displayed on the tester.

HINT:

- The A/F CONTROL operation lowers the fuel injection volume by 12.5 % or increases the injection volume by 25 %.
- Each sensor reacts in accordance with increases and decreases in the fuel injection volume.

Standard:

Tester Display (Sensor)	Injection Volumes	Status	Voltages
AFS B1S1 (AFS B2S1) (A/F)	+25 %	Rich	Less than 3.0
AFS B1S1 (AFS B2S1) (A/F)	−12.5 %	Lean	More than 3.35
O2S B1S2 (O2S B2S2) (HO2)	+25 %	Rich	More than 0.55
O2S B1S2 (O2S B2S2) (HO2)	−12.5 %	Lean	Less than 0.4

NOTICE:

The Air−Fuel Ratio (A/F) sensor has an output delay of a few seconds and the Heated Oxygen (HO2) sensor has a maximum output delay of approximately 20 seconds.

- Following the A/F CONTROL procedure enables technicians to check and graph the voltage outputs of both the A/F and HO2 sensors.
- To display the graph, select the following menu items on the tester: DIAGNOSIS / ENHANCED OBD II / ACTIVE TEST / A/F CONTROL / USER DATA / AFS B1S1 and O2S B1S2, and press the YES button and then the ENTER button followed by the F4 button.

Case	A/F Sensor (Sensor 1) Output Voltage	HO2 Sensor (Sensor 2) Output Voltage	Main Suspected Trouble Areas
1	Injection volume +25 % −12.5 % Output voltage More than 3.35 V Less than 3.0 V **OK**	Injection volume +25 % −12.5 % Output voltage More than 0.55 V Less than 0.4V **OK**	—
2	Injection volume +25 % −12.5 % Output voltage Almost no reaction **NG**	Injection volume +25 % −12.5 % Output voltage More than 0.55 V Less than 0.4V **OK**	● A/F sensor ● A/F sensor heater ● A/F sensor circuit
3	Injection volume +25 % −12.5 % Output voltage More than 3.35 V Less than 3.0V **OK**	Injection volume +25 % −12.5 % Output voltage Almost no reaction **NG**	● HO2 sensor ● HO2 sensor heater ● HO2 sensor circuit
4	Injection volume +25 % −12.5 % Output voltage Almost no reaction **NG**	Injection volume +25 % −12.5 % Output voltage Almost no reaction **NG**	● Injector ● Fuel pressure ● Gas leakage from exhaust system (Air−fuel ratio extremely lean or rich)

HINT:
Read freeze frame data using a hand−held tester. Freeze frame data record the engine condition when malfunctions are detected. When troubleshooting, freeze frame data can help determine if the vehicle was moving or stationary, if the engine was warmed up or not, if the air−fuel ratio was lean or rich, and other data, from the time the malfunction occurred.

1	**Check resistance of air−fuel ratio (A/F) sensor heater.**

Component Side:

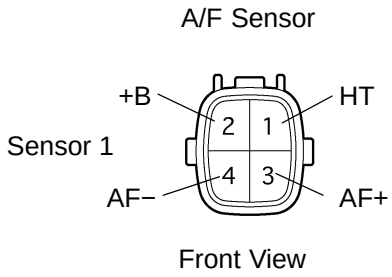

PREPARATION:
Disconnect the air−fuel ratio (A/F) sensor connector.
CHECK:
Measure resistance between the terminals of the A/F sensor connector.
OK:

Tester Connection	Specified Condition
HT (1) − +B (2)	Between 1.8 Ω and 3.4 Ω at 20°C (68°F)
HT (1) − AF− (4)	10 kΩ or higher

NG → **Replace air−fuel ratio (A/F) sensor.**

OK

2	**Check A/F relay.**

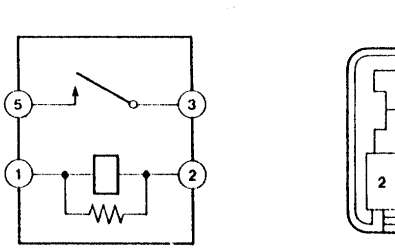

PREPARATION:
Remove the A/F relay from the engine room J/B.
CHECK:
Inspect the A/F relay.
OK:

Terminal No.	Condition	Specified Condition
1 − 2	Constant	Continuity
3 − 5	Usually	No Continuity
	Apply B+ between terminals 1 and 2	Continuity

NG → **Replace EFI relay.**

OK

3	**Check for open and short in harness and connector between ECM and A/F sensor.**

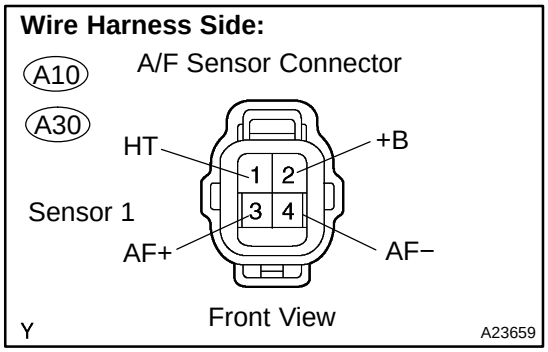

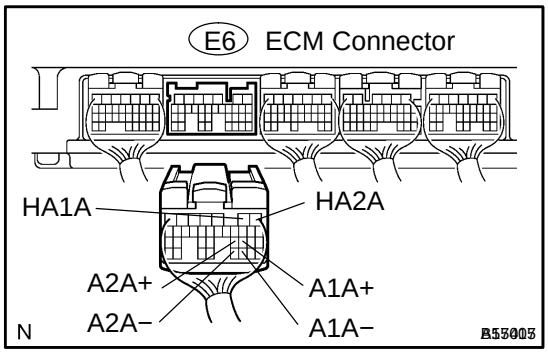

PREPARATION:

(a) Disconnect the A10 or A30 A/F sensor connector.

(b) Turn the ignition switch to ON.

CHECK:

(a) Measure the voltage between the +B terminal of the A/F sensor connector and body ground.

OK:

Standard:

Tester Connections	Specified Conditions
+B (2) − Body ground	Between 9 V and 14 V

PREPARATION:

(a) Turn the ignition switch to OFF.

(b) Disconnect the E6 ECM connector.

CHECK:

(a) Check the resistance.

OK:

Standard (Check for open):

Tester Connections	Specified Conditions
HT (A10−1) − HA1A (E6−2) HT (A30−1) − HA2A (E6−1)	Below 1 Ω
AF+ (A10−3) − A1A+ (E6−22) AF+ (A30−3) − A2A+ (E6−23)	Below 1 Ω
AF− (A10−4) − A1A− (E6−30) AF− (A30−4) − A2A− (E6−31)	Below 1 Ω

Standard (Check for short):

Tester Connections	Specified Conditions
HT (A10−1) or HA1A (E6−2) − Body ground HT (A30−1) or HA2A (E6−1) − Body ground	10 kΩ or higher
AF+ (A10−3) or A1A+ (E6−22) − Body ground AF+ (A30−3) or A2A+ (E6−23) − Body ground	10 kΩ or higher
AF− (A10−4) or A1A− (E6−30) − Body ground AF− (A30−4) or A2A− (E6−31) − Body ground	10 kΩ or higher

Reference (Bank 1 Sensor 1 System Drawing):

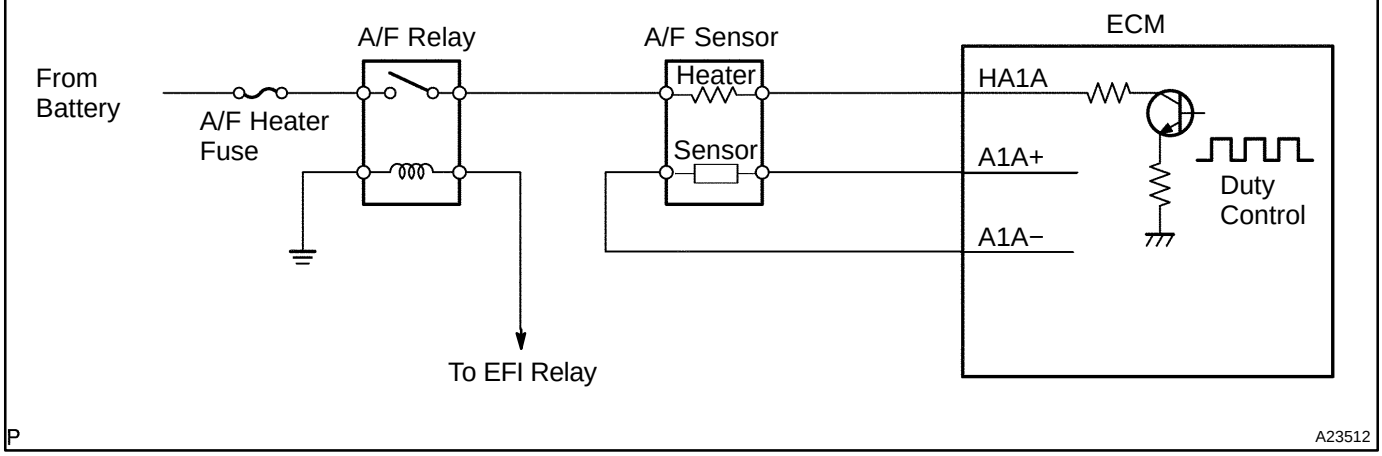

NG → Replace or replace harness or connector.

OK

Replace ECM (See page SF−82).

DIDS8−01

DTC	P2430	Secondary Air Injection System Air Flow/ Pressure Sensor Circuit Bank 1

DTC	P2431	Secondary Air Injection System Air Flow/Pressure Sensor Circuit Range/Performance Bank 1

DTC	P2432	Secondary Air Injection System Air Flow/ Pressure Sensor Circuit Low Bank 1

DTC	P2433	Secondary Air Injection System Air Flow/ Pressure Sensor Circuit High Bank 1

CIRCUIT DESCRIPTION

Refer to DTC P0412 on page DI−656.

DTC No.	DTC Detecting Condition	Trouble Area
P2430	While the engine is running, if voltage output of the pressure sensor indicates 0.1V or less, or indicates 4.815V or more. (1 trip detection logic)	• Pressure sensor • Open or short in pressure sensor circuit • ECM
P2431	The pressure sensor indicates less than 45.63 kPa (342 mmHg), or more than 135 kPa (1013 mHg). (1 trip detection logic)	
P2432	While the engine is running, if voltage output of pressure sensor remains below 0.1 V. (1 trip detection logic)	
P2433	While the engine is running, if voltage output of the pressure sensor remains above 4.815 V. (1 trip detection logic)	

MONITOR DESCRIPTION

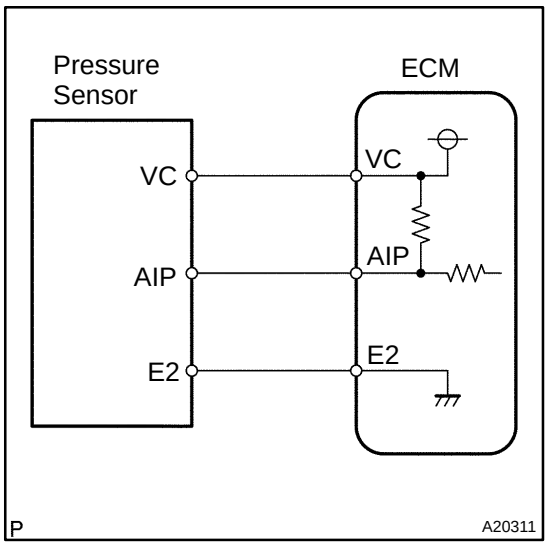

The ECM observes the pressure in the secondary air passage using the pressure sensor located on the air switching valve in the secondary air injection system.
If there is a defect in the sensor or the sensor circuit, the voltage level will deviate from the normal operating range, the ECM interprets this deviation as a defect in the pressure sensor circuit and sets a DTC.

MONITOR STRATEGY

Related DTCs	P2430	Air flow/Pressure sensor circuit range check (Fluctuating)
	P2431	Air flow/Pressure sensor circuit rationality
	P2432	Air flow/Pressure sensor circuit range check (Low voltage)
	P2433	Air flow/Pressure sensor circuit range check (High voltage)
Required sensors/components	Pressure sensor	
Frequency of operation	Continuous	
Duration	P2430, P2432, P2433: 0.5 sec. P2431: 5 sec.	
MIL operation	P2430, P2432, P2433: Immediate P2431: 2 driving cycles	
Sequence of operation	None	

TYPICAL ENABLING CONDITIONS

Item	Specification	
	Minimum	Maximum
The monitor will run whenever these DTCs are not present	See page DI−437	
Starter	OFF	
Time after starter turned from ON to OFF	2 sec.	−
Battery voltage	8 V	−
Ignition switch	ON	

TYPICAL MALFUNCTION THRESHOLDS

Detection Criteria	Threshold
P2430:	
Air pressure sensor voltage	Less than 0.1 V, or more than 4.815 V
P2431:	
Air pressure	Less than 45.63 kPa (342 mmHg), or more than 135 kPa (1013 mmHg)
P2432:	
Air pressure sensor voltage	Less than 0.1 V
P2433:	
Air pressure sensor voltage	More than 4.815 V

WIRING DIAGRAM

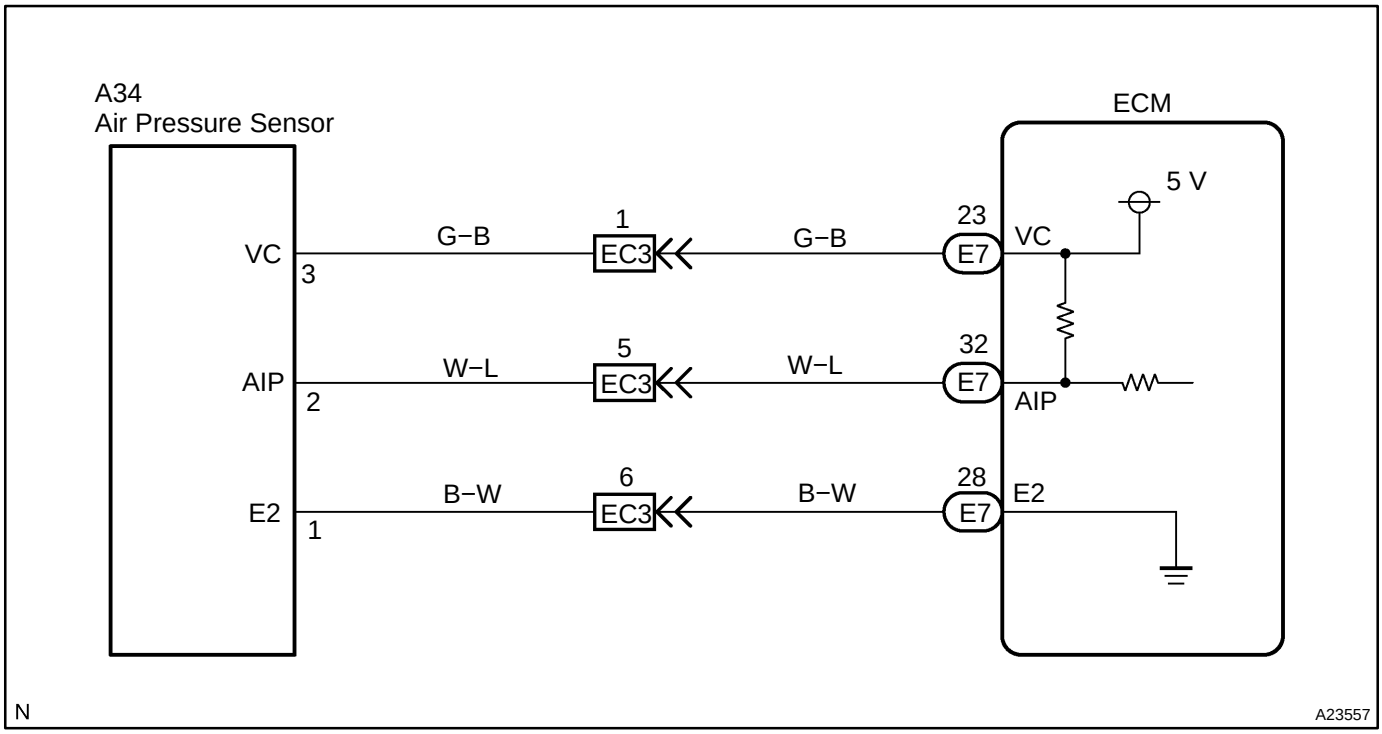

INSPECTION PROCEDURE

1	**Check for open and short in harness and connector between pressure sensor and ECM (See page IN−30).**

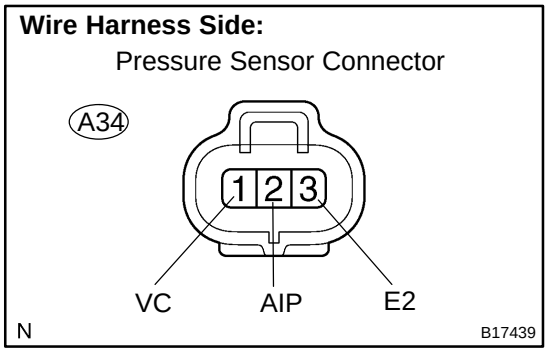

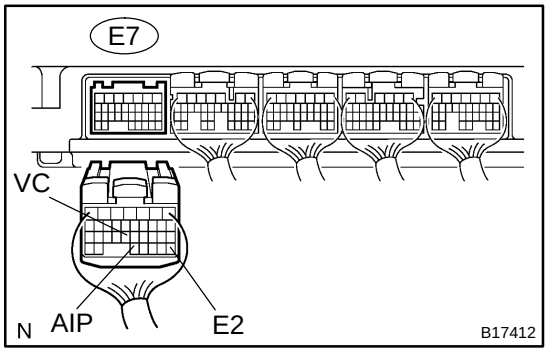

PREPARATION:

(a) Remove the intake manifold (see page EM−36).
(b) Disconnect the A34 pressure sensor connector.
(c) Disconnect the E7 ECM connector.

CHECK:

Measure the resistance between the wire harness side connectors.

OK:

Standard:

Tester Connection	Specified Condition
VC (A34−1) − VC (E7−23) AIP (A34−2) − AIP (E7−32) E2 (A34−3) − E2 (E7−28)	Below 1 Ω
VC (A34−1) or VC (E7−23) − Body ground AIP (A34−2) or AIP (E7−32) − Body ground	10 kΩ or higher

NG	**Repair or replace harness and connector.**

OK

2	Inspect pressure sensor.

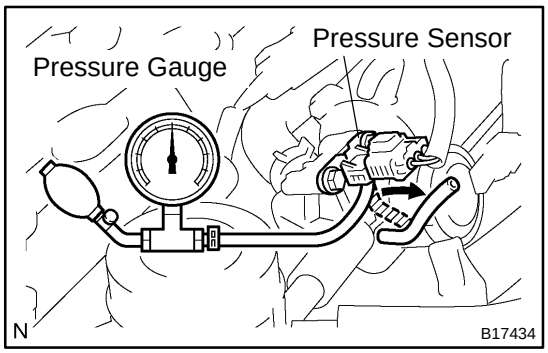

PREPARATION:

(a) Remove the intake manifold (see page EM−36).
(b) Connect the pressure gauge to the pressure sensor as shown in the illustration.
(c) Connect the hand−held tester to the DLC3 on the vehicle.
(d) Turn the ignition switch ON and push the hand−held tester main switch ON (Do not start engine).
(e) Select the following items: DIAGNOSIS / ENHANCED OBD II / DATA LIST / 2ND AIR PRESS.

CHECK:

Check that the pressure displayed on the hand−held tester fluctuates when applying the pressure to the pressure sensor with the pressure gauge.

OK:

Pressure fluctuates in response to the pressure applied with pressure gauge.

NG → **Replace pressure sensor (See page EC−20).**

OK

Replace ECM (See page SF−82).

DIDR7−01

CIRCUIT INSPECTION

DTC	P0010	Camshaft Position ”A” Actuator circuit (Bank 1)

DTC	P0020	Camshaft Position ”A” Actuator circuit (Bank 2)

CIRCUIT DESCRIPTION

The Variable Valve Timing (VVT) system includes the ECM, the Oil Control Valve (OCV) and the VVT controller. The ECM sends a target ”duty−cycle” control signal to the OCV. This control signal, applied to the OCV, regulates the oil pressure supplied to the VVT controller. Camshaft timing control is performed based on engine operation conditions such as intake air volume, throttle position and engine coolant temperature.
The ECM controls the OCV, based on the signals output from the sensors. The VVT controller regulates the intake camshaft angle using oil pressure through the OCV. As a result, the relative position between the camshaft and the crankshaft is optimized, and the engine torque improves, fuel economy improves, and exhaust emissions decrease under overall driving conditions. Also, the ECM detects the actual valve timing using signals from the camshaft position sensor and the crankshaft position sensor, and performs feedback control. This is how target valve timing is verified by the ECM.

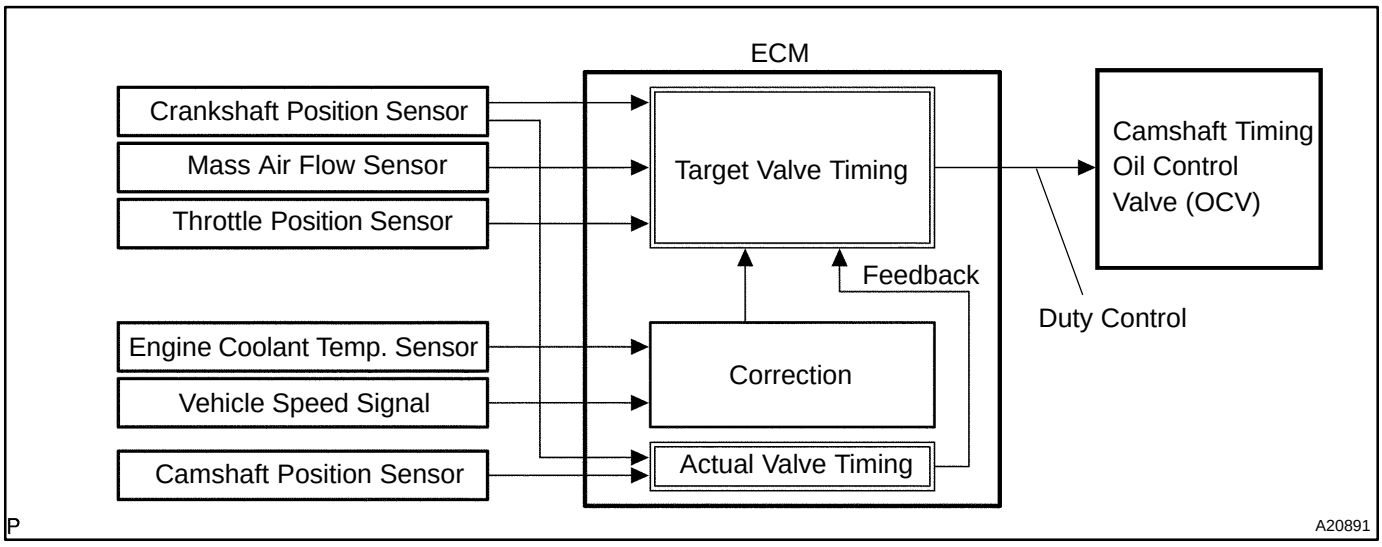

DTC No.	DTC Detecting Condition	Trouble Area
P0010 P0020	Open or short in OCV circuit	• Open or short in OCV circuit • OCV • ECM

MONITOR DESCRIPTION

After the ECM sends the ”target” duty−cycle signal to the OCV (Oil Control Valve), the ECM monitors the OCV current to establish an ”actual” duty−cycle. When the actual duty−cycle ratio varies from the target duty−cycle, the ECM sets a DTC.

MONITOR STRATEGY

Related DTCs	P0010	VVT oil control valve bank 1 range check
	P0020	VVT oil control valve bank 2 range check
Required sensors/components	OCV	
Frequency of operation	Continuous	
Duration	1 sec.	
MIL operation	Immediate	
Sequence of operation	None	

TYPICAL ENABLING CONDITIONS

Item	Specification	
	Minimum	Maximum
The monitor will run whenever this DTC not present	See page DI−437	
All of the following conditions are met	−	
Starter	OFF	
Ignition switch	ON	
Time after ignition switch OFF to ON	0.5 seconds	−

TYPICAL MALFUNCTION THRESHOLDS

Detection Criteria	Threshold
One of the following conditions is met:	Condition A, B or C
A. All of the following conditions are met:	Condition (a), (b) , and (c)
(a) Battery voltage	11 V or more, and less than 13 V
(b) Target duty ratio	Less than 70 %
(c) Output signal duty ratio	100 % or more
B. All of the following conditions are met:	Condition (a), (b) , and (c)
(a) Battery voltage	13 V or more
(b) Target duty ratio	Less than 80 %
(c) Output signal duty ratio	100 % or more
C. Both of the following conditions are met:	Condition (a) and (b)
(a) Current cut ststus	Not cut
(b) Output signal duty ratio	3% or less

COMPONENT OPERATING RANGE

Parameter	Standard Value
OCV current	3 to 100 %

WIRING DIAGRAM

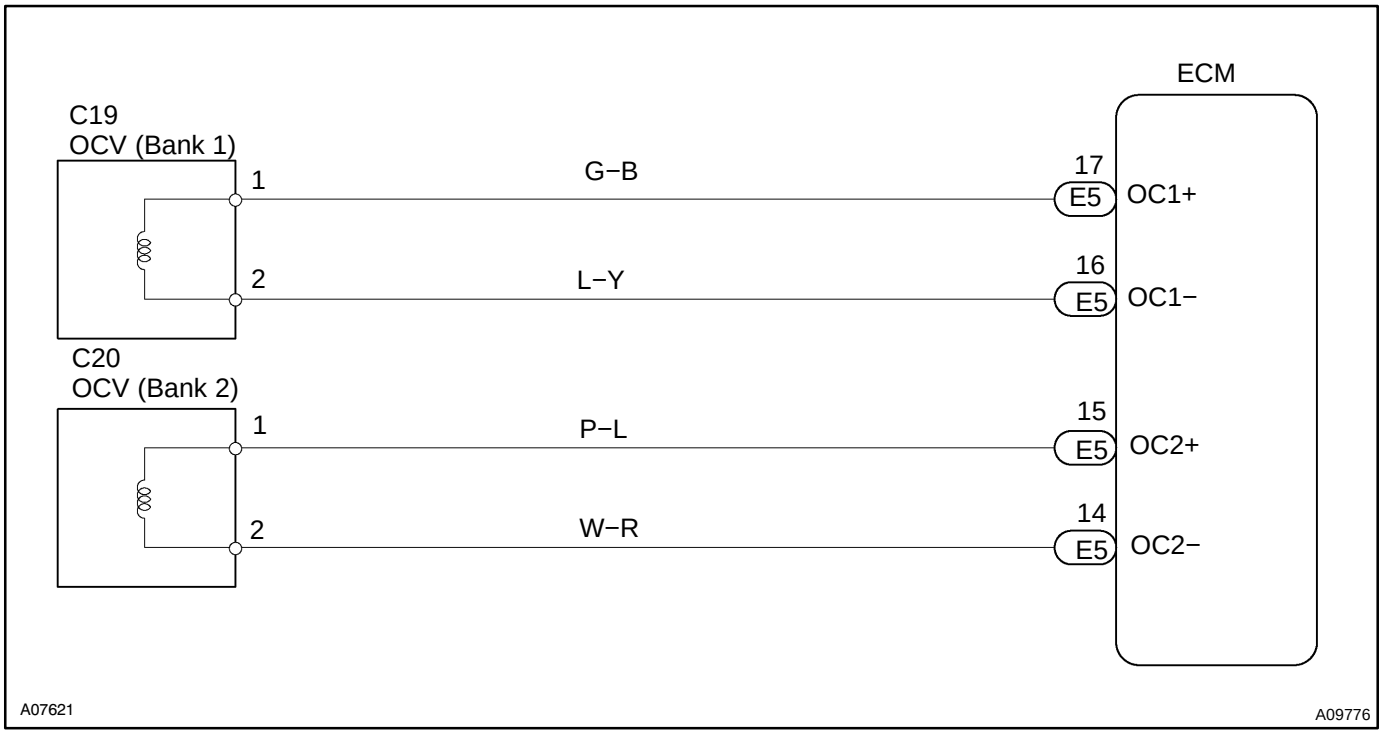

INSPECTION PROCEDURE

HINT:

- If DTC P0010 displayed, check left bank OCV circuit.
- If DTC P0020 displayed, check right bank OCV circuit.
- Read freeze frame data using hand−held tester. Because freeze frame records the engine conditions when the malfunction is detected. When troubleshooting, it is useful for determining whether the vehicle was running or stopped, the engine was warmed up or not, the air−fuel ratio was lean or rich, etc. at the time of the malfunction.

1	**Check OCV circuit.**

PREPARATION:

(a) Connect the hand−held tester to the DLC3.
(b) Start the engine and warm it up.
(c) Turn the ignition switch to ON and turn the hand−held tester ON.

CHECK:

(a) Select the item: DIAGNOSIS / ENHANCED OBD II / ACTIVE TEST / VVT CTRL B1 or VVT CTRL B2.
(b) Using the hand−held tester, operate the OCV and check the engine speed.

OK:

Standard:

Tester Operation	Specified Condition
OCV is OFF	Normal engine speed
OCV is ON	Rough idle or engine stall

OK → **Check for intermittent problems (See page DI−430).**

NG

2	**Check operation of OCV.**

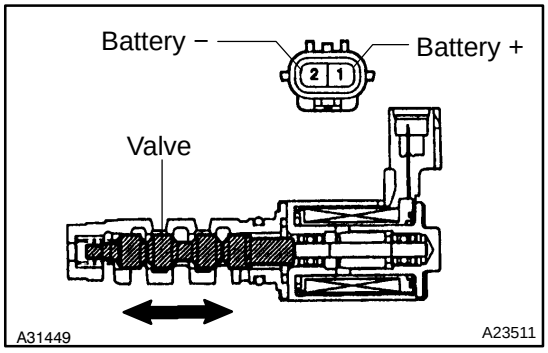

PREPARATION:

(a) Start the engine and warmed it up.
(b) Disconnect the OCV connector.
(c) Apply battery positive voltage between the terminals of the OCV.

CHECK:

Check the engine speed.

OK:

Rough idle or engine stalled.

NG → **Replace OCV.**

OK

3	**Check voltage between terminals OC1+ and OC1−, OC2+ and OC2− of ECM connector.**

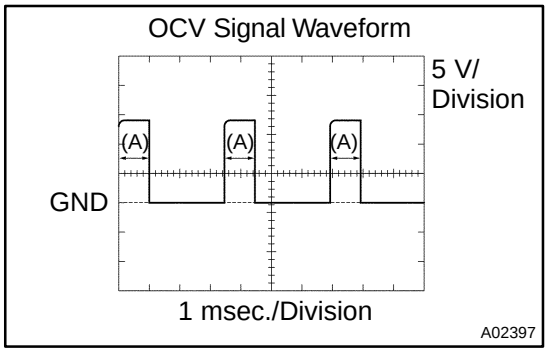

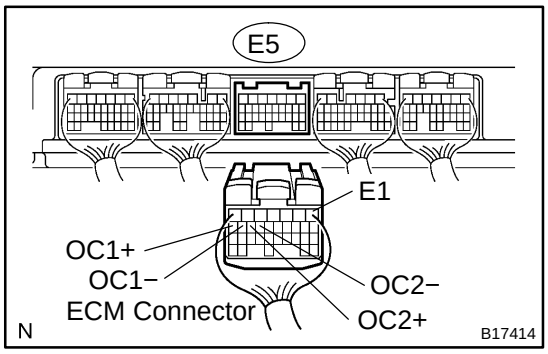

CHECK:

(a) Inspection using the oscilloscope.

(b) During idling, check the waveform between the specified terminals of the E5 ECM connector.

HINT:

The waveform frequency (A) is lengthened as the engine speed becomes higher.

OK:

Standard:

The correct waveform is as shown.

NG → **Replace ECM (See page SF−82).**

OK

4	Check for open and short in harness and connector between OCV and ECM.

Wire Harness Side

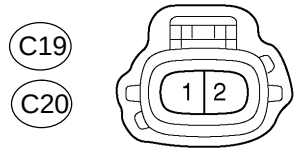

OCV Connector

Y A23673

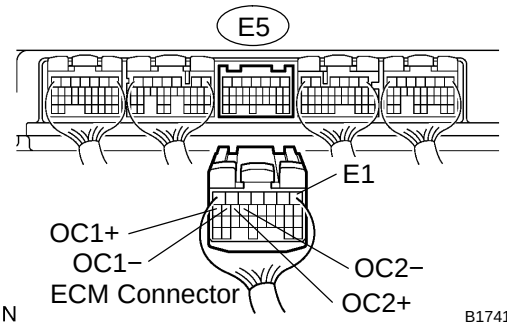

N B17414

PREPARATION:

(a) Disconnect the C19 or C20 OCV connector.

(b) Disconnect the E5 ECM connector.

CHECK:

(a) Check for resistance between the wire harness side connectors.

OK:

Standard (Check for open):

Symbols (Terminal No.)	Specified condition
OCV (C19−1) − OC1+ (E5−17)	Below 1 Ω
OCV (C19−2) − OC1− (E5−16)	Below 1 Ω
OCV (C20−1) − OC2+ (E5−15)	Below 1 Ω
OCV (C20−2) − OC2− (E5−14)	Below 1 Ω

Standard (Check for short):

Symbols (Terminal No.)	Specified condition
OCV (C19−1) or OC1+ (E5−17) − E1 (E5−1)	10 kΩ or higher
OCV (C19−1) or OC1− (E5−16) − E1 (E5−1)	10 kΩ or higher
OCV (C20−1) or OC2+ (E5−15) − E1 (E5−1)	10 kΩ or higher
OCV (C20−1) or OC2− (E5−14) − E1 (E5−1)	10 kΩ or higher

NG → **Repair or replace harness or connector.**

OK

Check for intermittent problems (See page DI−430).

DIDR9−01

DTC	P0016	Crankshaft Position − Camshaft Position Correlation (Bank 1 Sensor A)

DTC	P0018	Crankshaft Position − Camshaft Position Correlation (Bank 2 Sensor A)

CIRCUIT DESCRIPTION

VVT sensor (VVL or VVR signal) consist of a signal plate and pickup coil.
The VVL or VVR signal plate has 1 tooth on its outer circumference and is mounted on the intake camshafts. When the camshafts rotate, the protrusion on the signal plate and the air gap on the pickup coil change, causing fluctuations in the magnetic field and generating an electromotive force in the pickup coil.
The actual camshaft angle is detected by the VVT sensor and it provides feedback to the ECM to control the intake valve timing in response to during condition.

DTC No.	DTC Detecting Condition	Trouble Area
P0016 P0018	No VVT sensor signal to ECM during cranking at 4 sec. or more	• Open or short in VVT sensor circuit • VVT sensor • ECM
	No VVT sensor signal to ECM with 5 sec. or more engine speed 600 rpm or more	
	While the crankshaft rotates twice, VVT sensor signal will be input to ECM 5 times	

MONITOR DESCRIPTION

The ECM optimizes the valve timing using the VVT (Variable Valve Timing) system to control the intake valve camshaft. The VVT system includes the ECM, the OCV (Oil Control Valve) and the VVT controller. The ECM sends a target duty−cycle control signal to the OCV. This control signal, applied to the OCV, regulates the oil pressure supplied to the VVT controller. The VVT controller can advance or retard the intake valve camshaft. The ECM calibrates the valve timing of the VVT system by setting the camshaft to the maximum retard angle when the engine is idle. The ECM closes the OCV to retard the cam. The ECM stores this value as VVT learning value (When the difference between the target valve timing and the actual valve timing is 5 degrees or less, the ECM stores this in its memory.).
If the learning value meets both of the following conditions ((a) and (b)), the ECM interprets this as a defect in the VVT system and sets a DTC.
(a) VVT learning value is less than 20°CA (Crankshaft Angle) or more than 39°CA.
(b) Above condition continues for more than 18 sec.

MONITOR STRATEGY

Related DTCs	P0016	Deviation in crankshaft position sensor signal and camshaft position sensor signal (Bank 1)
	P0018	Deviation in crankshaft position sensor signal and camshaft position sensor signal (Bank 2)
Required sensors/components	Crankshaft position sensor, Camshaft position sensor	
Frequency of operation	Once per drive cycle	
Duration	within 60 sec.	
MIL operation	2 drive cycles	
Sequence of operation	None	

TYPICAL ENABLING CONDITIONS

Item	Specification	
	Minimum	Maximum
The monitor will run whenever this DTC is not present	See page DI−437	
Engine RPM	400 rpm	1,400 rpm

TYPICAL MALFUNCTION THRESHOLDS

Detection Criteria	Threshold
One of the following conditions is met	Condition 1 or 2
1. VVT angle when camshaft is retarded maximum	Less than 22.5°CA
2. VVT angle when camshaft is retarded maximum	More than 44°CA (Bank 1) More than 47.5°CA (Bank 2)

INSPECTION PROCEDURE

HINT:

- If DTC P0016 is displayed, check left bank VVT sensor.
- If DTC P0018 is displayed, check right bank VVT sensor.
- Read freeze frame data using hand−held tester or OBD II scan tool. Because freeze frame records the engine conditions when the malfunction is detected. When troubleshooting, it is useful for determining whether the vehicle was running or stopped, the engine was warmed up or not, the air−fuel ratio was lean or rich, etc. at the time of the malfunction.

1	**Check valve timing (Check for loose and jumping teeth of timing belt) (See page EM−9).**

NG → **Adjust valve timing (Repair or replace timing belt).**

OK

Check and replace ECM (See page SF−82).

DIDSB−01

DTC	P043E	Evaporate Emission System Reference Orifice Clog Up

DTC	P043F	Evaporate Emission System Reference Orifice High Flow

CIRCUIT DESCRIPTION

Refer to the EVAP Inspection Procedure (see page DI−884).

DTC	Monitoring Item	Detection Conditions	Trouble Areas	Detection Timing	Detection Logic
P043E	0.02 inch orifice clogged	One of following conditions are met: • 0.02 inch orifice low−flow • 0.02 inch orifice high−flow • Vacuum pump ON stuck • Vacuum pump OFF stuck • Vent valve ON (Closed) stuck NOTE: P043E, P043F, P2401, P2402 and P2419 have same DTC detection conditions.	• Pump module • Connector / Wire harness (Pump module − ECM) • ECM	While ignition switch OFF	2 trips
P043F	0.02 inch orifice high−flow				

WIRING DIAGRAM

Refer to the EVAP Inspection Procedure (see page DI−884).

MONITOR DESCRIPTION

5 hours* after the ignition switch is turned OFF, the electric vacuum pump creates negative pressure (vacuum) in the EVAP (Evaporative Emission) system. The ECM monitors for leaks and actuator malfunctions based on the EVAP pressure.

HINT:

*: If the engine coolant temperature is not below 35°C (95°F) after 5 hours after the ignition switch is turned off, the monitor check starts 2 hours later. If it is still not below 35°C (95°F) 7 hours after the ignition switch is turned off, the monitor check starts 2.5 hours later.

Sequence	Operations	Descriptions	Duration
−	ECM activation	Activated by soak timer, 5 hours (7 or 9.5 hours) after ignition switch turned to OFF.	−
A	Atmospheric pressure measurement	Vent valve turned OFF (vent) and EVAP system pressure measured by ECM in order to register atmospheric pressure. If EVAP pressure is not between 70 kPa and 110 kPa (525 mmHg and 825 mmHg), ECM cancels EVAP system monitor.	10 seconds
B	First 0.02 inch leak pressure measurement	In order to determine 0.02 inch leak pressure standard, vacuum pump creates negative pressure (vacuum) through 0.02 inch orifice and then ECM checks if vacuum pump and vent valve operate normally.	60 seconds
C	EVAP system pressure measurement	Vent valve turned ON (closed) to shut EVAP system. Negative pressure (vacuum) created in EVAP system, and EVAP system pressure then measured. Write down the measured value as it will be used in the leak check. If EVAP pressure does not stabilize within 15 minutes, ECM cancels EVAP system monitor.	15 minutes*
D	Purge VSV monitor	Purge VSV opened and then EVAP system pressure measured by ECM. Large increase indicates normal.	10 seconds
E	Second 0.02 inch leak pressure measurement	Leak check is performed after second 0.02 inch leak pressure standard is measured. If stabilized system pressure higher than second 0.02 inch leak pressure standard, ECM determines that EVAP system leaking.	60 seconds
F	Final check	Atmospheric pressure measured and then monitoring result recorded by ECM.	−

* If only a small amount of fuel is in the fuel tank, it takes longer for the EVAP pressure to stabilize.

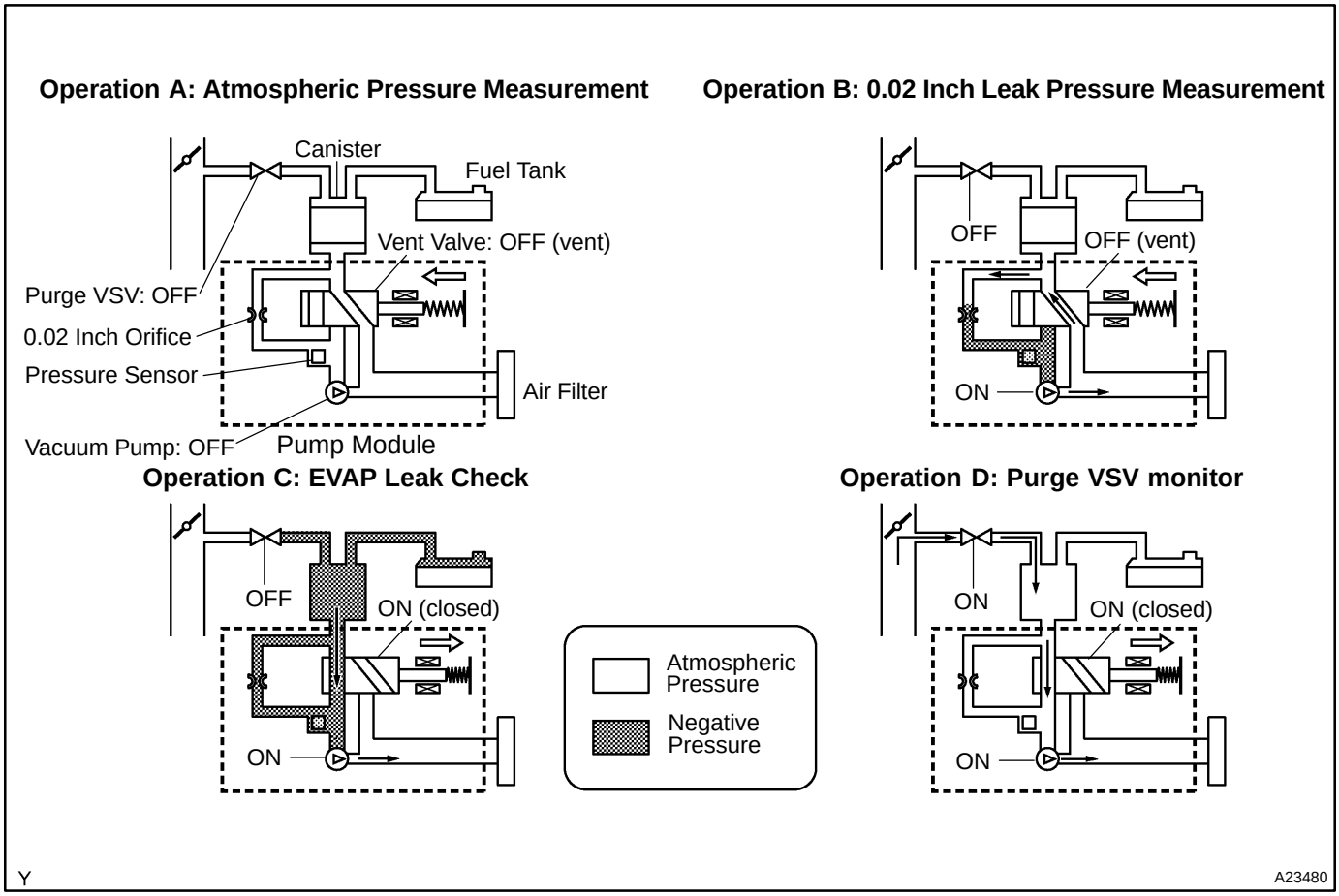

In sequence B and E, to determine the leak criterion, the vacuum pump creates negative pressure in the canister pump module through the 0.02 inch orifice. If the pressure is out of specified range or is not saturated, the ECM illuminates the MIL and sets DTCs P043E, P043F, P2401, P2402 and P2419 (2−trip detection logic).

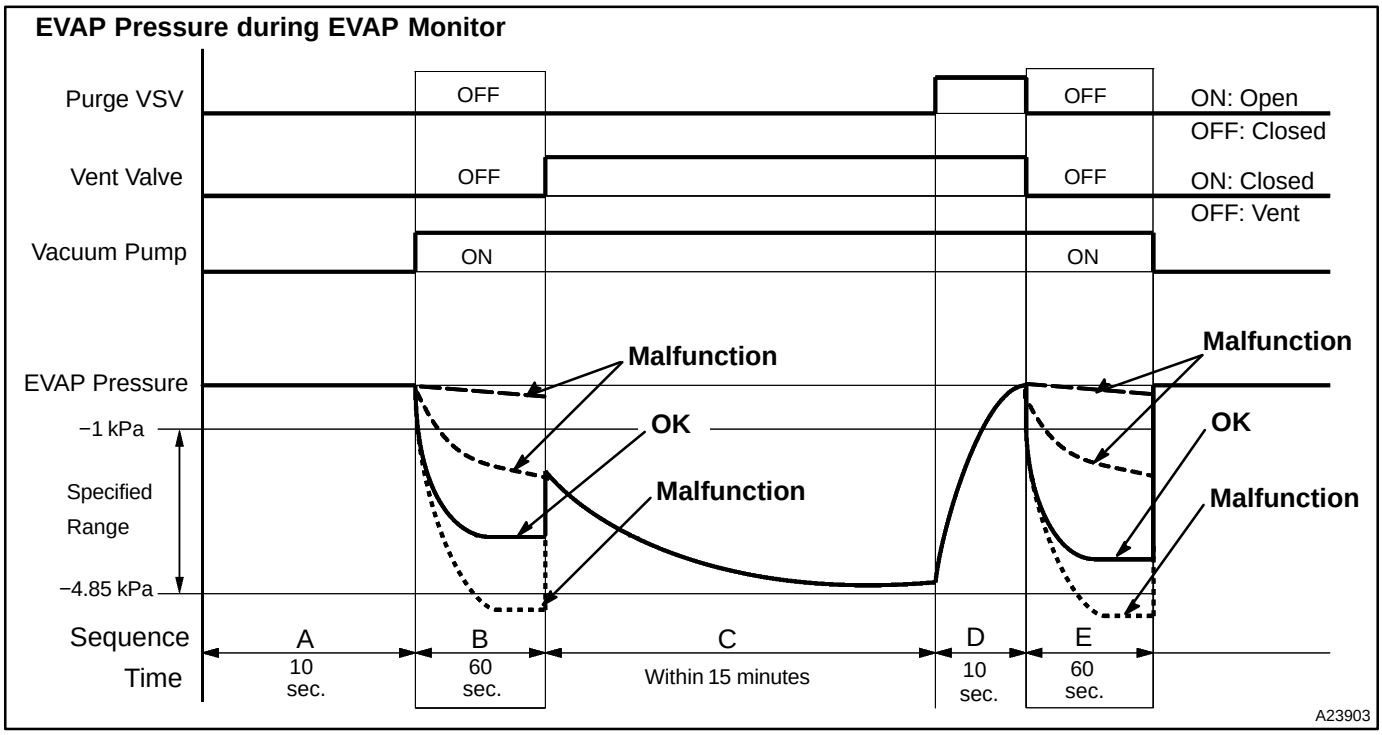

MONITOR STRATEGY

Related DTCs	P043E	0.02 inch orifice clog (built−in pump module)
	P043F	0.02 inch orifice high−flow (built−in pump module)
Required sensors/components	Pump module	
Frequency of operation	Once per driving cycle	
Duration	Within 2 min. (varies with amount of fuel in tank)	
MIL operation	2 driving cycle	
Sequence of operation	None	

TYPICAL ENABLING CONDITIONS

Item	Specification	
	Minimum	Maximum
The monitor will run whenever these DTCs are not present	See page DI−437	
Atmospheric pressure	70 to 110 kPa (525 to 825 mmHg)	
Battery voltage	10.5 V	−
Vehicle speed	−	2.5 mph (4 km/h)
Ignition switch	OFF	
Time after key off	5 or 7 or 9.5 hours	
EVAP pressure sensor malfunction (P0450, P0452, P0453)	Not detected	
EVAP canister purge valve	Not operated by scan tool	
EVAP canister vent valve	Not operated by scan tool	
EVAP leak detection pump	Not operated by scan tool	
Both of the following conditions 1 and 2 set before key off	−	
1. Duration that vehicle has been driven	5 min.	−
2. EVAP purge operation	Performed	
ECT	4.4 to 35°C (40 to 95°F)	
IAT	4.4 to 35°C (40 to 95°F)	
Key−off monitor sequence	1 to 8	
1. Atmospheric pressure	−	
Next sequence is run if the following condition is set	−	
Atmospheric pressure change	−	0.3 kPa (2.25 mmHg)
2. First reference pressure measurement	−	
Next sequence is run if the following conditions are set	Condition 1, 2 and 3	
1. EVAP pressure just after reference pressure measurement start	−	−1 kPa (−7.5 mmHg)
2. Reference pressure	−4.85 to −1.057 kPa (−36.38 to −7.93 mmHg)	
3. Reference pressure	Saturated within 60 seconds	

3. EVAP canister vent valve close stuck check	−	
Next sequence is run if the following condition is set	−	
EVAP pressure change after vent valve is ON	0.3 kPa (2.25 mmHg)	−
4. Vacuum introduction	−	
Next sequence is run if the following condition is set	−	
EVAP pressure	Saturated within 15 minutes	
5. EVAP canister purge valve close stuck check	−	
Next sequence is run if the following condition is set	−	
EVAP pressure change after purge valve is open	0.3 kPa (2.25 mmHg)	−
6. Second reference pressure measurement	−	
Next sequence is run if the following conditions are set	Condition 1, 2, 3 and 4	
1. EVAP pressure just after reference pressure	−	−1 kPa (−7.5 mmHg)
2. Reference pressure	−4.85 to −1.057 kPa (−36.38 to −7.93 mmHg)	
3. Reference pressure	Saturated within 60 seconds	
4. Difference between first reference pressure and second reference pressure	−	0.7 kPa (5.25 mmHg)
7. Leak check	−	
Next sequence is run if the following condition is set	−	
EVAP pressure when vacuum introduction is complete	−	Second reference pressure
8. Atmospheric pressure measurement	−	
EVAP monitor is complete if the following condition is set	−	
Atmospheric pressure difference between sequence 1 and 8	−	0.3 kPa (2.25 mmHg)

TYPICAL MALFUNCTION THRESHOLDS

Detection Criteria	Threshold
One of the following conditions is met	Condition 1, 2, 3, 4 or 5
1. EVAP pressure just after reference pressure measurement start	More than −1 kPa (−7.5 mmHg)
2. Reference pressure	Less than −4.85 kPa (−36.38 mmHg)
3. Reference pressure	−1.057 kPa (−7.93 mmHg) or more
4. Reference pressure	Not saturated
5. Difference between first reference pressure and second reference pressure	0.7 kPa (5.3 mmHg) or more

MONITOR RESULT (MODE 06 DATA)

Refer to page DI−445 for detailed information.

INSPECTION PROCEDURE

Refer to the EVAP Inspection Procedure (see page DI−884).

DI1LC−19

DTC	P0101	Mass or Volume Air Flow Circuit Range/ Performance Problem

CIRCUIT DESCRIPTION

Refer to DTC P0100, P0102 and P0103 on page DI−522.

DTC No.	DTC Detecting Condition	Trouble Area
P0101	After engine is warmed up, conditions (a), (b), (c) and (d) continue for more than 10 seconds: (2 trip detection logic) (a) Throttle valve fully closed (b) Voltage output of the mass air flow meter is more than 2.2 V. (c) Engine coolant temperature is more than 70 °C (158 °F). (d) Engine speed is less than 2,000 rpm.	• Mass air flow meter
	Conditions (a), (b) and (c) continue for more than 10 seconds at engine speed: (2 trip detection logic) (a) Engine speed is more than 300 rpm. (b) Voltage output of the mass air flow meter is less than 1.0 V.	

MONITOR DESCRIPTION

The MAF (Mass Air Flow) meter helps the ECM calculate the amount of air flowing through the throttle valve. The ECM uses this information to determine the fuel injection time and provide a proper air fuel ratio. Inside the MAF meter, there is a heated platinum wire exposed to the flow of intake air. By applying a specific current to the wire, the ECM heats this wire to a given temperature. The flow of incoming air cools the wire and an internal thermistor, affecting their resistance. To maintain a constant current value, the ECM varies the voltage applied to these components in the MAF meter. The voltage level is proportional to the air flow through the MAF meter. The ECM interprets this voltage as the intake air amount. If there is a defect in the MAF meter or an open or short circuit, the voltage level will deviate outside the normal operating range. The ECM interprets this deviation as a defect in the MAF meter and sets a DTC.

Example:

If the voltage is more than 2.2 V at idle or less than 1.0 V at idle OFF, the ECM interprets this as a defect in the MAF meter and sets a DTC.

MONITOR STRATEGY

Related DTCs	P0101	Mass air flow meter rationality (Low voltage)
		Mass air flow meter rationality (High voltage)
Required sensors/components	Main sensors/components	Mass air flow meter
	Related sensors/components	Engine speed sensor, Engine coolant temperature sensor, Throttle position sensor
Frequency of operation	Continuous	
Duration	10 sec.	
MIL operation	2 driving cycles	
Sequence of operation	None	

TYPICAL ENABLING CONDITIONS

Item	Specification	
	Minimum	Maximum
The monitor will run whenever this DTC is not present	See page DI−437	
High voltage:		
Engine speed	−	2,000 rpm
Engine coolant temperature	70°C (158°F)	−
Low voltage:		
Engine speed	300 rpm	−
Fuel cut	OFF	

TYPICAL MALFUNCTION THRESHOLDS

Detection Criteria	Threshold
Mass air flow meter voltage (High voltage)	More than 2.2 V (varies with throttle position sensor voltage)
Mass air flow meter voltage (Low voltage)	Less than 1.0 V (varies with throttle position sensor voltage)

INSPECTION PROCEDURE

HINT:

Read freeze frame data using the hand−held tester. Freeze frame data records the engine conditions when a malfunction is detected. When troubleshooting, freeze frame data can help determine if the vehicle was running or stopped, if the engine was warmed up or not, if the air−fuel ratio was lean or rich, as well as other data from the time when a malfunction occurred.

1	**Are there any other codes (besides DTC P0101) being output?**

PREPARATION:

(a) Connect the hand−held tester to the DLC3.
(b) Turn the ignition switch ON and push the hand−held tester main switch ON.
(c) When using hand−held tester, enter the following menu: DIAGNOSIS/ENHANCED OBD II/DTC INFO/ CURRENT CODES.

CHECK:

Read the DTC using the hand−held tester.

RESULT:

Display (DTC output)	Proceed to
”P0101” and other DTCs	A
Only P0101	B

HINT:

If any other codes besides P0101 are output, perform the troubleshooting for those codes first.

B → **Replace mass air flow meter.**

A

Go to relevant DTC chart (See page DI−477).

DIDR8−01

DTC	P0011	Camshaft Position ”A” −Timing Over− Actuator or System Performance (Bank 1

DTC	P0012	Camshaft Position ”A” −Timing Over− Retarded (Bank 1)

DTC	P0021	Camshaft Position ”A” −Timing Over− Actuator or System Performance (Bank 2)

DTC	P0022	Camshaft Position ”A” −Timing Over− Retarded (Bank 2)

CIRCUIT DESCRIPTION

Refer to DTCs P0010 on page DI−492.

DTC No.	DTC Detecting Condition	Trouble Area
P0011 P0021	Advanced cam timing: After engine is warmed up and engine speed is at 400 to 4,000 rpm, condition (a) continues. (1 trip detection logic) (a) Valve timing does not change from current valve timing	• Valve timing • OCV • VVT controller assembly • ECM
P0012 P0022	Retarded cam timing: After engine is warmed up and engine speed is at 400 to 4,000 rpm, condition (a) continues. (2 trip detection logic) (a) Valve timing does not change from current valve timing	

MONITOR DESCRIPTION

The ECM optimizes the valve timing using the VVT (Variable Valve Timing) system to control the intake valve camshaft. The VVT system includes the ECM, the OCV (Oil Control Valve) and the VVT controller. The ECM sends a target ”duty−cycle” control signal to the OCV. This control signal, applied to the OCV, regulates the oil pressure supplied to the VVT controller. The VVT controller can advance or retard the intake valve camshaft.

Example:

A DTC will set if: 1) the difference between the target and actual valve timing is more than 5 degrees of the crankshaft angle (CA) and the condition continues for more than 4.5 sec.; or 2) the OCV is forcibly activated 63 times or more.

Advanced cam DTCs are subject to ”1 trip” detection logic.

Retarded cam DTCs are subject to ”2 trip” detection logic.

MONITOR STRATEGY

Related DTCs	P0011	VVT system advance (Bank 1)
	P0012	VVT system retard (Bank 1)
	P0021	VVT system advance (Bank 2)
	P0022	VVT system retard (Bank 2)
Required sensors/components	Main sensors/components	Camshaft position sensor
	Related sensors/components	Engine coolant temperature sensor, Crankshaft position sensor
Frequency of operation	Once per drive cycle	
Duration	10 sec.	
MIL operation	P0011, P0021: Immediate P0012, P0022: 2 driving cycles	
Sequence of operation	None	

TYPICAL ENABLING CONDITIONS

Item	Specification	
	Minimum	Maximum
The monitor will run whenever this DTC is not present	See page DI−437	
Battery voltage	11 V	−
Engine RPM	400 rpm	4,000 rpm
Engine coolant temperature	75°C (167°F)	100°C (212°F)

TYPICAL MALFUNCTION THRESHOLDS

Detection Criteria	Threshold
P0011, P0021 (advance)	
Duration of valve timing	More than 5°CA (Crankshaft angle)
Valve timing	No change at advanced valve timing
P0012, P0022 (retard)	
Duration of valve timing	More than 5°CA (Crankshaft angle)
Valve timing	No change at retarded valve timing

WIRING DIAGRAM

Refer to DTCs P0010 on page DI−492.

INSPECTION PROCEDURE

HINT:

- Bank 1 refers to bank that includes cylinder No. 1.
- Bank 2 refers to bank that does not include cylinder No. 1.
- If DTC P0011, P0012 is displayed, check the bank 1 VVT system.
- If DTC P0021, P0022 is displayed, check the bank 2 VVT system.
- Read freeze frame data using the hand−held tester. Freeze frame data records the engine conditions when a malfunction is detected. When troubleshooting, it is useful for determining whether the vehicle was running or stopped, the engine was warmed up or not, the air−fuel ratio was lean or rich, etc. at the time of the malfunction.

1	**Check operation of OCV.**

PREPARATION:

(a) Connect the hand−held tester to the DLC3.
(b) Start the engine and warm it up.
(c) Turn the ignition switch to ON and turn the hand−held tester ON.

CHECK:

(a) Select the item: DIAGNOSIS / ENHANCED OBD II / ACTIVE TEST / VVT CTRL B1 or VVT CTRL B2.
(b) Using the hand−held tester, operate the OCV and check the engine speed.

OK:

Standard:

Tester Operation	Specified Condition
OCV is OFF	Normal engine speed
OCV is ON	Rough idle or engine stall

OK → **VVT system is OK.***

*: DTC P0011, P0012, P0021 or P0022 is also output when a foreign object is detected in some parts of the system in the engine oil, and then the system returns to normal in a short time. As ECM is controlled to eject a foreign object, there is no problem on the VVT. There is also no problem on the VVT as the oil filter should catch the foreign object in the engine oil.

NG

2	**Check valve timing (See page EM−9).**

NG → **Adjust valve timing.**

OK

3	Check voltage between terminals OCV+ and OCV− of ECM connector.

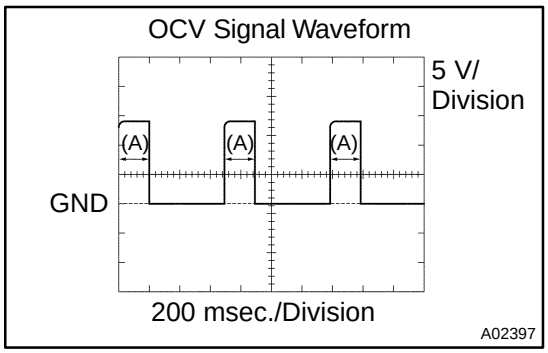

CHECK:

(a) Inspection using the oscilloscope.

(b) During idling, check the waveform between the specified terminals of the E5 ECM connector.

HINT:

The waveform frequency (A) is lengthened as the engine speed becomes higher.

OK:

Standard:

The correct waveform is as shown.

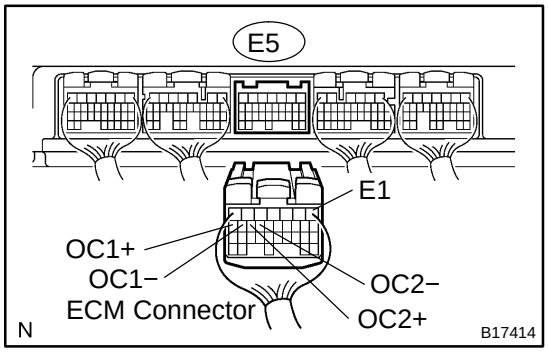

NG → **Replace ECM (See page SF−82).**

OK

4	Check OCV.

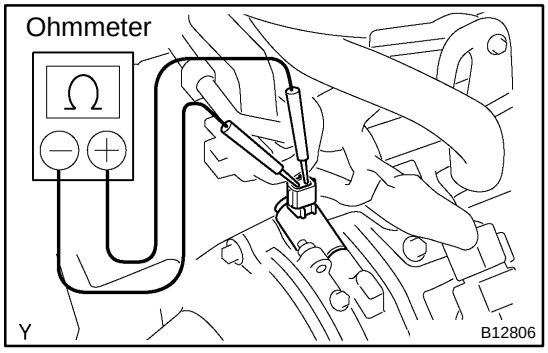

PREPARATION:

(a) Remove the V−bank cover.

(b) Remove the air cleaner inlet and intake air connector.

(c) Disconnect the oil control valve connector.

CHECK:

(a) Using an Ohmmeter, measure the resistance between the terminals.

Resistance: 6.9 − 7.9 Ω at 20˚C (68˚F)

NG → **Replace OCV, and then go to step 6.**

OK

5	Check VVT controller assembly.

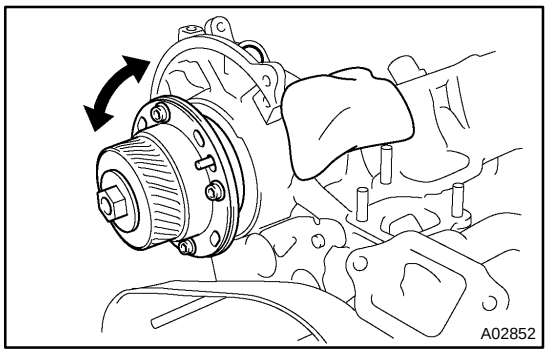

PREPARATION:

(a) Remove the timing belt (See page EM−16).
(b) Remove the cylinder head cover.
(c) Remove the OCV (See page SF−48).
(d) Drain the oil in the VVT controller assembly (See page EM−46).

CHECK:

Check whether the oil in VVT controller assembly is drained or not.

OK:

Standard:

The oil in VVT controller assembly is drained.

NG	Replace VVT controller assembly, and then go to step 6.

OK

6	Check oil control valve filter.

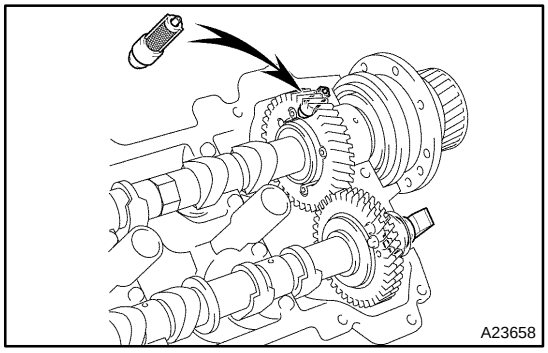

PREPARATION:

(a) Remove the cylinder head cover.
(b) Remove the camshaft bearing cap and OCV filter.

CHECK:

Check that the filter is not clogged.

OK:

The filter is not clogged.

NG	Repair or replace.

OK

7	**Check whether or not DTC P0010, P0012, P0021 or P0022 is stored.**

PREPARATION:

(a) Clear DTCs (see page DI−462).

(b) Perform simulation test.

CHECK:

Check whether or not DTC P0011, P0012, P0021 or P0022 is stored (See page DI−462).

OK:

Standard: DTC P0011, P0012, P0021 or P0022 is not stored.

OK → **VVT system is OK.***

*: DTC P0011, P0012, P0021 or P0022 is also output when a foreign object is detected in some parts of the system in the engine oil, and then the system returns to normal in a short time. As ECM is controlled to eject a foreign object, there is no problem on the VVT. There is also no problem on the VVT as the oil filter should catch the foreign object in the engine oil.

NG

Replace ECM.

DTC	P0116	Engine Coolant Temperature Circuit Range/ Performance Problem

CIRCUIT DESCRIPTION

Refer to DTC P0115 on page DI−540.

DTC No.	DTC Detecting Condition	Trouble Area
P0116	If the engine coolant temperature was 35˚C (95˚F) or more but less than 60˚C (140˚F) when the engine is started, and if conditions (a) and (b) are met: (a) Vehicle has accelerated and decelerated. (b) Engine coolant temperature remains within 3˚C (5.4˚F) of the initial engine coolant temperature (2 trip detection logic)	• Engine coolant temperature sensor
	If the engine coolant temperature is more than 60˚C (140˚F) when the engine is started, and if conditions (a) and (b) are met: (a) Vehicle has accelerated and decelerated. (b) If the engine coolant temperature sensor records a temperature variation below 1˚C (1.8˚F) successively 6 times (6 trip detection logic)	

MONITOR DESCRIPTION

The ECT (Engine Coolant Temperature) sensor is used to monitor the engine coolant temperature. The ECT sensor has a thermistor that varies its resistance depending on the temperature of the engine coolant. When the coolant temperature is low, the resistance in the thermistor increases. When the temperature is high, the resistance drops. The variations in resistance are reflected in the voltage output from the sensor. The ECM monitors the sensor voltage and uses this value to calculate the engine coolant temperature. When the sensor output voltage deviates from the normal operating range, the ECM interprets this as a fault in the ECT sensor and sets a DTC.

Examples:

(1) Upon starting the engine, the ECT is between 35˚C (95˚F) and 60˚C (140˚F). If after driving for 250 sec., the ECT still remains within 3˚C (5.4˚F) of the starting temperature, a DTC will be set (2 trip detection logic).

(2) Upon starting the engine, the ECT is over 60˚C (140˚F). If after driving for 250 sec., the ECT still remains within 1˚C (1.8˚F) of the starting temperature, a DTC will be set (6 trip detection logic).

MONITOR STRATEGY

Related DTCs	P0116	Engine coolant temperature sensor range check (Stuck)
Required sensors/components	Main sensors/components	Engine coolant temperature sensor
	Related sensors/components	Intake air temperature sensor, Crankshaft position sensor, Mass air flow meter
Frequency of operation	Continuous	
Duration	250 sec.	
MIL operation	2 driving cycles (When temperature is fixed between 35°C (95°F) and 60°C (140°F)) 6 driving cycles (When temperature is fixed at 60°C (140°F) or more)	
Sequence of operation	None	

TYPICAL ENABLING CONDITIONS

Item	Specification	
	Minimum	Maximum
The monitor will run whenever this DTC is not present	See page DI−437	
Case 1 (When temperature is fixed between 35°C (95°F) and 60°C (140°F)):		
Cumulative idle off period	250 sec.	−
Speed increase 18.6 mph (30 km/h) or more	10 times	−
Engine coolant temperature	35°C (95°F)	60°C (140°F)
Intake air temperature	−6.7°C (20°F)	−
Intake air temperature sensor circuit fail	Not detected	
Case 2 (When temperature is fixed at 60°C (140°F) or more):		
Engine coolant temperature at engine start	60°C (140°F)	−
Intake air temperature	−6.7°C (20°F)	−
Stop and go*1	Once or more	
Steady driving and stop*2	Once or more	
Engine running time after engine start	0.3 seconds or more	

*1: The vehicle is stopped for 20 seconds or more and accelerated to more than 43.5 mph (70 km/h) within 40 seconds.

*2: Following these steps: 1) the vehicle is driven at 40.4 mph (65 km/h) or more for 30 seconds or more and the vehicle speed reaches 43.5 mph (70 km/h); 2) the vehicle is decelerated from 40.4 mph (65 km/h) to 1.86 mph (3 km/h) or less within 35 seconds; and 3) the vehicle is stopped for 10 seconds.

TYPICAL MALFUNCTION THRESHOLDS

Detection Criteria	Threshold
Case1 (When temperature is fixed between 35°C (95°F) and 60°C (140°F)):	
Change of engine coolant temperature value	Less than 3°C (5.4°F)
Case2 (When temperature is fixed at 60°C (140°F) or more):	
Change of engine coolant temperature value	1°C (1.8°F) or less

COMPONENT OPERATING RANGE

Standard Value
Engine coolant temperature changes with the actual engine coolant temperature.

INSPECTION PROCEDURE

HINT:

- If DTC P0115, P0116, P0117, P0118 and P0125 are output simultaneously, ECT sensor circuit may be open or shorted. Perform the troubleshooting of DTC P0115, P0117 or P0118 first.
- Read freeze frame data using the hand−held tester. Freeze frame data records the engine conditions when a malfunction is detected. When troubleshooting, freeze frame data can help determine if the vehicle was running or stopped, if the engine was warmed up or not, if the air−fuel ratio was lean or rich, as well as other data from the time when a malfunction occurred.

Replace engine coolant temperature sensor.

DI1LI−24

DTC	P0121	Throttle Pedal Position Sensor/Switch ”A” Circuit Range/Performance Problem

HINT:
This is the purpose of the ”throttle position sensor”.

CIRCUIT DESCRIPTION

Refer to DTC P0120 on page DI−548.

DTC No.	DTC Detecting Condition	Trouble Area
P0121	Condition (a) continues for 2.0 sec.: (a) Difference between VTA1 and VTA2 deviates from the threshold	Throttle control motor and sensor

MONITOR DESCRIPTION

The ECM uses throttle position sensor to monitor the throttle valve opening angle.
This sensor includes two signals, VTA1 and VTA2. VTA1 is used to detect the throttle opening angle and VTA2 is used to detect malfunctions in VTA1. There are several checks that the ECM performs confirm proper operation of the throttle position sensor and VTA1.
There is a specific voltage difference expected between VTA1 and VTA2 for each throttle opening angle. If the voltage output difference of the VTA1 and VTA2 deviates from the normal operating range, the ECM interprets this as a malfunction of the throttle position sensor. The ECM will turn on the MIL and a DTC is set.

FAIL SAFE

If the ETCS (Electronic Throttle Control System) has a malfunction, the ECM cuts off current to the throttle control motor. The throttle control valve returns to a predetermined opening angle (approximately 16°) by the force of the return spring. The ECM then adjusts the engine output by controlling the fuel infection (intermittent fuel−cut) and ignition timing in accordance with the accelerator pedal opening angle to enable the vehicle to continue at a minimum speed.
If the accelerator pedal is depressed firmly and slowly, the vehicle can be driven slowly.
If a ”pass” condition is detected and then the ignition switch is turned OFF, the fail−safe operation will stop and the system will return to normal condition.

MONITOR STRATEGY

Related DTCs	P0121	Throttle position sensor rationality
Required sensors/components	Throttle position sensor	
Frequency of operation	Continuous	
Duration	Within 2 seconds	
MIL operation	Immediate	
Sequence of operation	None	

TYPICAL ENABLING CONDITIONS

Item	Specification	
	Minimum	Maximum
The monitor will run whenever this DTC is not present	See page DI−437	
Either of the following condition is met:	Condition 1 or 2	
1. Ignition switch	ON	
2. Electric throttle motor power	ON	
TP sensor malfunction (P0120, P0122, P0123, P0220, P0222, P0223, P2135)	Not detected	

TYPICAL MALFUNCTION THRESHOLDS

Detection Criteria	Threshold
Different between VTA1 and VTA2 |VTA1 − (VTA2 × 0.8 to 1.2)|* * Corrected by learning value	Less than 0.8 V, or more than 1.6 V

INSPECTION PROCEDURE

HINT:

Read freeze frame data using the hand−held tester. Freeze frame data records the engine conditions when a malfunction is detected. When troubleshooting, freeze frame data can help determine if the vehicle was running or stopped, if the engine was warmed up or not, if the air−fuel ratio was lean or rich, as well as other data from the time when a malfunction occurred.

Replace throttle control motor and sensor (See page SF−43).

DICMT−02

DTC	P0125	Insufficient Coolant Temperature for Closed Loop Fuel Control

CIRCUIT DESCRIPTION

Refer to DTC P0115 on page DI−540.

DTC No.	DTC Detection Condition	Trouble Area
P0125	If THW or THA is less than −19.45˚C (−3˚F) at engine start and 20 min. or more after starting engine, engine coolant temp. sensor value is 20˚C (68˚F) or less (2 trip detection logic)	• Cooling system • Engine coolant temperature sensor • Thermostat
	If THW and THA is between −19.45˚C (−3˚F) and −8.34˚C (17˚F) at engine start, 129 sec. or more after starting engine and engine coolant temp. sensor value is 20˚C (68˚F) or less (2 trip detection logic)	
	If THW and THA greater than −8.34˚C (17˚F) at engine start and 77 sec. or more after starting engine, engine coolant temp. sensor value is 20˚C (68˚F) or less (2 trip detection logic)	

MONITOR DESCRIPTION

The ECT (Engine Coolant Temperature) sensor is used to monitor the temperature of the engine coolant. The resistance of the sensor varies with the actual coolant temperature. The ECM applies a voltage to the sensor and the varying resistance of the sensor cause the signal voltage to vary. The ECM monitors the ECT signal voltage after engine start−up. If, after sufficient time has passed, the sensor still reports that the engine is not warmed up enough for closed−loop fuel control after sufficient time has passed, the ECM interprets this as a fault in the sensor or cooling system and sets a DTC.

Example:

The engine coolant temperature was 0°C (32°F) at engine start. After 5 min. running time, the ECT sensor still indicates that the engine is not warmed up enough to begin air fuel ratio feedback control of the air−fuel ratio. The ECM interprets this as a fault in the sensor or cooling system and will set a DTC.

MONITOR STRATEGY

Related DTCs	P0125	Insufficient coolant temperature for closed loop fuel control
Required sensors/components	Main sensors/components	Engine coolant temperature sensor, Cooling system, Thermostat
	Related sensors/components	Mass air flow meter
Frequency of operation	Continuous	
Duration	77 sec. (at engine start, engine coolant or intake air temperature of −8.34˚C (17˚F) or more) 129 sec. (at engine start, engine coolant or intake air temperature of −19.45 to −8.34˚C (−3 to 17˚F)) 20 min. (at engine start, engine coolant or intake air temperature of less than −19.45˚C (−3˚F))	
MIL operation	2 driving cycles	
Sequence of operation	None	

TYPICAL ENABLING CONDITIONS

Item	Specification	
	Minimum	Maximum
The monitor will run whenever this DTC is not present	See page DI−437	
Fuel cut	OFF	
Engine	Running	

TYPICAL MALFUNCTION THRESHOLDS

Detection Criteria	Threshold
Time until ”engine coolant temperature” detection temperature reaches feedback start temperature	
When the temperature at the time of engine starting is −8.34˚C (17˚F) or more	Engine coolant temperature is less than ”closed−loop enable temperature” when 77 sec. or more after engine start
When the temperature at the time of engine starting is −19.45 to −8.34˚C (−3 to 17˚F)	Engine coolant temperature is less than ”closed−loop enable temperature” when 129 sec. or more after engine start
When the temperature at the time of engine starting is −19.45˚C (−3˚F) or less	Engine coolant temperature is less than ”closed−loop enable temperature” when 20 min. or more after engine start

INSPECTION PROCEDURE

HINT:

- If DTC P0115, P0116, P0117, P0118 and P0125 are output simultaneously, engine coolant temperature sensor circuit may be open or short. Perform the troubleshooting of DTC P0115, P0117 or P0118 first.
- Read freeze frame data using the hand−held tester. Freeze frame data records the engine conditions when a malfunction is detected. When troubleshooting, freeze frame data can help determine if the vehicle was running or stopped, if the engine was warmed up or not, if the air−fuel ratio was lean or rich, as well as other data from the time when a malfunction occurred.

1	**Are there any other codes (besides DTC P0125) being output?**

PREPARATION:

(a) Connect the hand−held tester to the DLC3.
(b) Turn the ignition switch ON and push the hand−held tester main switch ON.
(c) When using hand−held tester, enter the following menu: DIAGNOSIS / ENHANCED OBD II / DTC INFO / CURRENT CODES.

CHECK:

Read the DTCs using the hand−held tester.

RESULT:

Display (DTC output)	Proceed to
P0125	A
”P0125” and other DTCs	B

HINT:

If any other codes besides ”P0125” are output, perform the troubleshooting for those DTCs first.

B → **Go to relevant DTC chart (See page DI−477).**

A

2	**Inspect thermostat (See page CO−11).**

CHECK:

Check the valve opening temperature of the thermostat.

OK:

Valve opening temperature is 80 to 84°C (176 to 183°F)

HINT:

Also check that the valve is completely closed under opening temperature as above.

NG → **Replace thermostat (See page CO−12).**

OK

3	**Check cooling system.**

CHECK:

Check that there is detect in the cooling system which causes overcool, such as abnormal radiator fan operation, modified cooling system and so on.

NG → **Repair or replace cooling system.**

OK

Replace engine coolant temperature sensor.

DICMU−02

DTC	P0128	Coolant Thermostat (Coolant Temperature Below Thermostat Regulating Temperature)

HINT:
This is the purpose of ”thermostat” malfunction detection.

CIRCUIT DESCRIPTION

If the engine coolant temperature does not reach 75˚C (167˚F) despite sufficient warm−up time has elapsed.

DTC No.	DTC Detection condition	Trouble Area
P0128	Condition (a), (b) and (c) are met: (a) Cold start (b) After sufficient warm−up time has elapsed (c) Engine coolant temperature greater than 75˚C (167˚F)	• Thermostat • Cooling system • Engine coolant temperature sensor • ECM

MONITOR DESCRIPTION

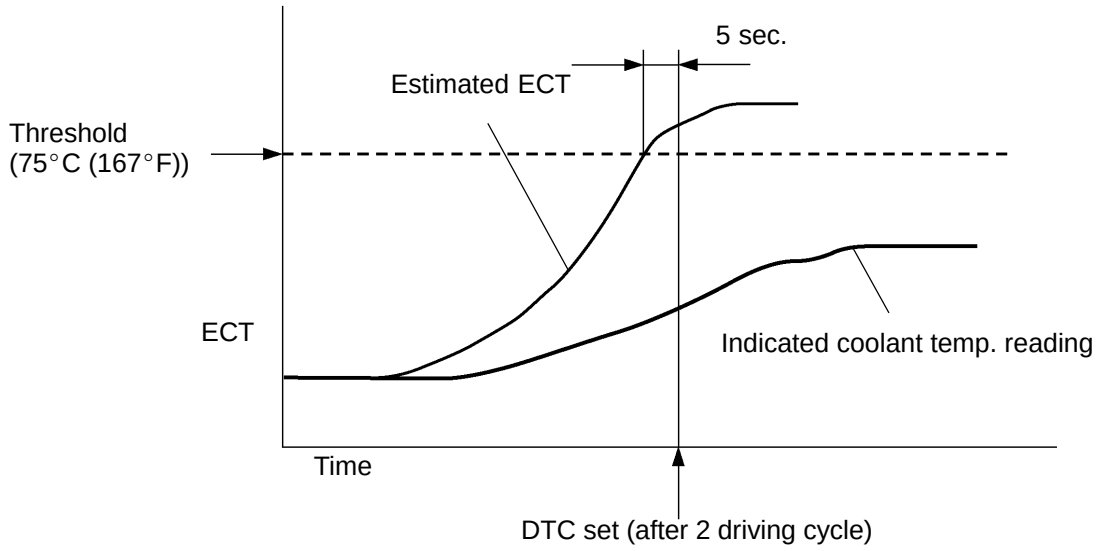

Y A20488 A21045

The ECM estimates the coolant temperature based on starting temperature, engine loads, and engine speeds. The ECM then compares the estimated temperature with the actual ECT (Engine Coolant Temperature). When the estimated coolant temperature reaches 75°C (167°F), the ECM checks the actual ECT. If the actual ECT is less than 75°C (167°F), the ECM will interpret this as a fault in the thermostat or engine cooling system and set a DTC.

MONITOR STRATEGY

Related DTCs	P0128	Thermostat
Required sensors/components	Main sensors/components	Engine coolant temperature sensor, Engine cooling system, Thermostat
	Related sensors/components	Intake air temperature sensor, Vehicle speed sensor
Frequency of operation	Once per driving cycle	
Duration	15 min.	
MIL operation	2 driving cycles	
Sequence of operation	None	

TYPICAL ENABLING CONDITIONS

Item	Specification	
	Minimum	Maximum
The monitor will run whenever this DTC is not present	See page DI−437	
Battery voltage	11.0 V	−
Throttle position learning	Completed	
Either of the following conditions is met	Condition 1 or 2	
1. All of the following conditions are met	Condition (a), (b) and (c)	
(a) ECT at engine start − IAT at engine start	−15 to 7°C (−5 to 44.6°F)	
(b) ECT at engine start	−10 to 56°C (14 to 133°F)	
(c) IAT at engine start	−10 to 56°C (14 to 133°F)	
2. All of the following conditions are met	Condition (d), (e) and (f)	
(d) ECT at engine start − IAT at engine start	7°C (44.6°F)	−
(e) ECT at engine start	−	56°C (133°F)
(f) IAT at engine start	−10°C (14°F)	−
Accumulated time that vehicle speed is 80 mph (128 km/h) or more	−	20 sec.

TYPICAL MALFUNCTION THRESHOLDS

Detection Criteria	Threshold
Duration that both of following conditions 1 and 2 are met	5 sec. or more
1. Estimated engine coolant temperature	75°C (167°F) or more
2. Engine coolant temperature sensor output	Less than 75°C (167°F)

COMPONENT OPERATING RANGE

Parameter	Standard Value
Engine coolant temperature sensor output value after warm up	75°C (167°F) or more

INSPECTION PROCEDURE

HINT:

Read freeze frame data using the hand−held tester. Freeze frame data records the engine conditions when a malfunction is detected. When troubleshooting, freeze frame data can help determine if the vehicle was running or stopped, if the engine was warmed up or not, if the air−fuel ratio was lean or rich, as well as other data from the time when a malfunction occurred.

1	**Are there any other codes (besides DTC P0128) being output?**

PREPARATION:

(a) Connect the hand−held tester to the DLC3.
(b) Turn the ignition switch ON and push the hand−held tester main switch ON.
(c) When using hand−held tester, enter the following menu: DIAGNOSIS / ENHANCED OBD II / DTC INFO / CURRENT CODES.

CHECK:

Read the DTC using the hand−held tester.

RESULT:

Display (DTC Output)	Proceed to
P0128	A
P0128 and other DTCs	B

HINT:

If any other codes besides P0128 are output, perform the troubleshooting for those DTCs first.

B → **Check for intermittent problems (See page DI−430).**

A

2	**Check cooling system.**

CHECK:

(a) Check for defects in the cooling system that might cause the system to be too cold, such as abnormal radiator fan operation or a modified cooling system.
(b) Check the valve opening temperature of the thermostat.

OK:

Valve opening temperature is 80 to 84°C (176 to 183°F)

HINT:

Also check that the valve is completely closed under opening temperature as above.

NG → **Repair or replace cooling system.**

OK

3	**Check thermostat (See page CO−12).**

CHECK:

Check the valve lift.

OK:

Valve lift: 10 mm (0.39 in.) or more at 95°C (203°F)

NG → **Replace thermostat.**

OK

Replace ECM (See page SF−82).

DIDRG−01

DTC	P0230	Fuel Pump Primary Circuit

CIRCUIT DESCRIPTION

In the diagram below, when the engine is cranked, current flows from terminal STAR of the ECM to the starter relay coil and also current flows to terminal STA of the ECM (STA signal).
When the STA signal and NE signal are input to the ECM, the Tr1 is turned ON, current flows to the coil of the circuit opening relay, the relay switches on, power is supplied to the fuel pump, and the fuel pump operates.
While the NE signal is generated (engine running), the ECM keeps the Tr1 ON (circuit opening relay ON) and the fuel pump also keeps operating.
The fuel pump speed is controlled at two levels (high speed or low speed) by the condition of the engine (starting, light load, heavy load). When the engine starts (STA ON), the Tr2 in the ECM is OFF, so the fuel pump relay closes and battery positive voltage is applied directly to the fuel pump. The fuel pump operates at high speed.
After the engine starts while idling or light loads, since the Tr2 goes ON, power is supplied to the fuel pump via the fuel pump resistor. The fuel pump operates at low speed.

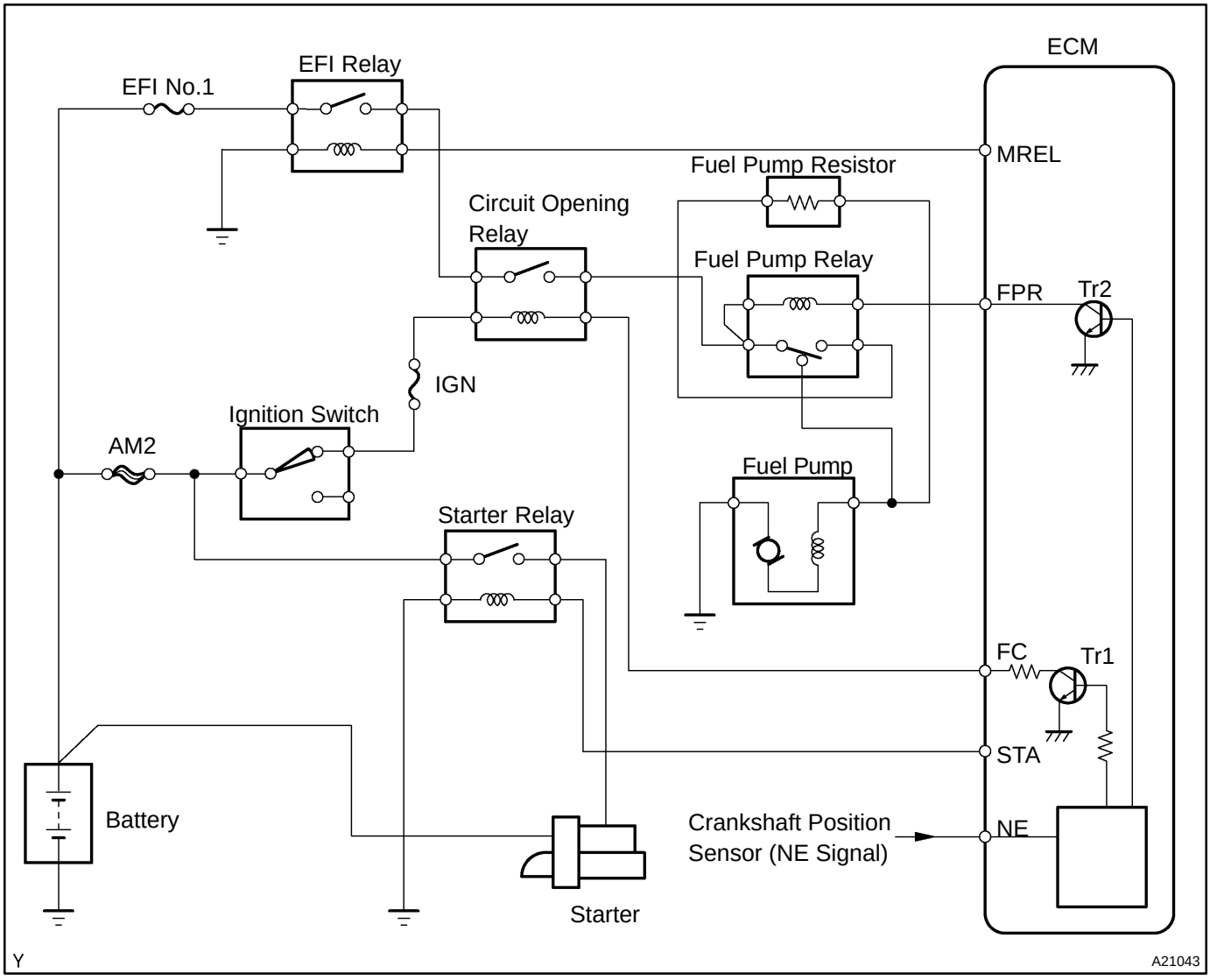

DTC No.	DTC Detecting Condition	Trouble Area
P0230	Open or short in fuel pump relay circuit	• Open or short in fuel pump relay circuit • Fuel pump relay • Circuit opening relay • Fuel pump • ECM

WIRING DIAGRAM

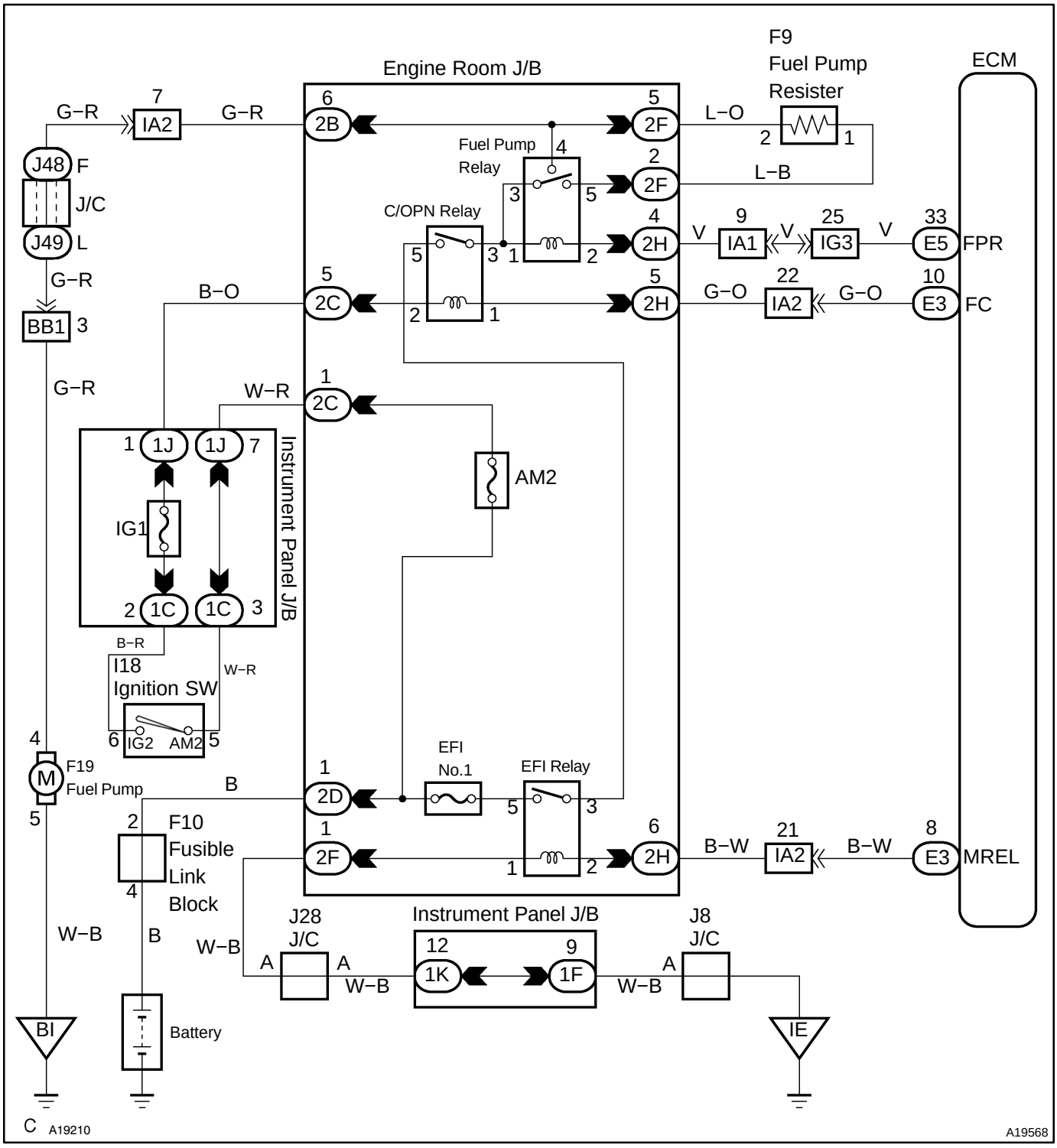

HINT:
This diagnostic chart is based on premise that engine is started. If the engine is not started, proceed to problem symptoms table on DI−452.

INSPECTION PROCEDURE

HINT:

Read freeze frame data using the hand−held tester. Freeze frame data records the engine conditions when a malfunction is detected. When troubleshooting, freeze frame data can help determine if the vehicle was running or stopped, if the engine was warmed up or not, if the air−fuel ratio was lean or rich, as well as other data from the time when a malfunction occurred.

1	**Check voltage between terminal FPR and E1 of ECM.**

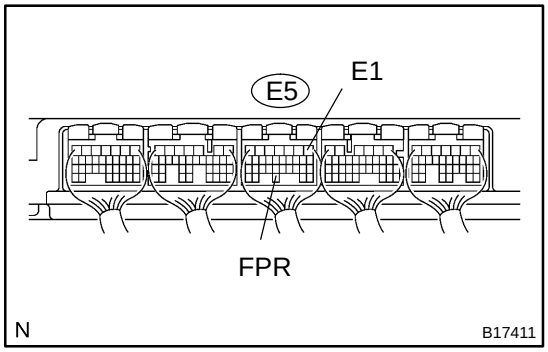

CHECK:

Measure the voltage between terminals of E5 and E5 ECM connectors.

OK:

Tester Connection	Condition	Specified Condition
FPR (E5−30) − E1 (E5−1)	STA signal ON	9 to 14 V
FPR (E5−30) − E1 (E5−1)	STA signal OFF	0 to 3 V

OK → **Replace ECM (See page SF−82).**

NG

2	**Check fuel pump relay.**

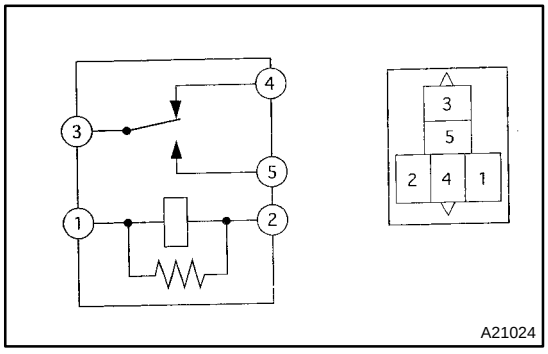

PREPARATION:

Remove the fuel pump relay from the engine room R/B.

CHECK:

Inspect the fuel pump relay.

OK:

Terminal No.	Condition	Specified Condition
3 − 4	Apply B+ between terminals 1 and 2	No Continuity
3 − 4	Usually	Continuity
3 − 5	Usually	No Continuity
3 − 5	Apply B+ between terminals 1 and 2	Continuity

NG → **Replace fuel pump relay.**

OK

3	**Check for open and short in harness and connector between fuel pump relay and ECM.**

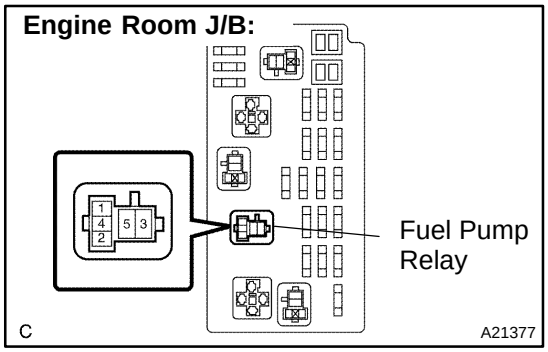

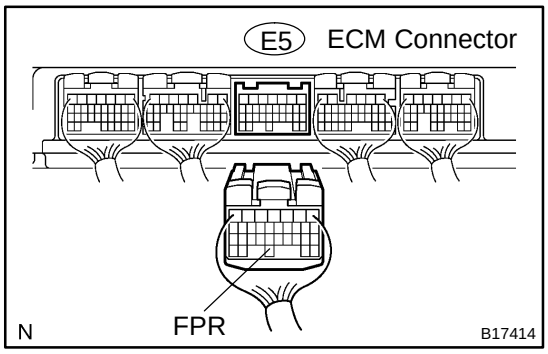

PREPARATION:

(a) Remove the fuel pump relay from the engine room J/B.

(b) Disconnect the E5 ECM connector.

CHECK:

Measure the resistance between wire harness side connectors.

OK:

Standard:

Tester Connection	Specified Condition
Engine Room J/B (Fuel pump relay terminal 1) − FPR (E5−30)	Below 1 Ω
Engine Room J/B (Fuel pump relay terminal 1) or FPR (E5−30) − Body ground	10 kΩ or higher

NG → **Repair or replace harness or connector.**

OK

Replace ECM (See page SF−82).

DIDRH−01

DTC	P0300	Random/Multiple Cylinder Misfire Detected
DTC	P0301	Cylinder 1 Misfire Detected
DTC	P0302	Cylinder 2 Misfire Detected
DTC	P0303	Cylinder 3 Misfire Detected
DTC	P0304	Cylinder 4 Misfire Detected
DTC	P0305	Cylinder 5 Misfire Detected
DTC	P0306	Cylinder 6 Misfire Detected
DTC	P0307	Cylinder 7 Misfire Detected
DTC	P0308	Cylinder 8 Misfire Detected

CIRCUIT DESCRIPTION

When a misfire occurs in the engine, hydrocarbons (HC) enter the exhaust in high concentrations. If this HC concentration is high enough, there could be an increase in exhaust emission levels. High concentrations of HC can also cause the temperature of the catalyst to increase, possibly damaging the catalyst. To prevent this increase in emissions and limit the possibility of thermal damage, the ECM monitors the misfire rate. When the temperature of the catalyst reaches a point of thermal degradation, the ECM will blink the MIL. For monitoring misfire, the ECM uses both the camshaft position sensor and the crankshaft position sensor. The camshaft position sensor is used to identify misfiring cylinders and the crankshaft position sensor is used to measure variations in the crankshaft rotation speed. The misfire counter increments when crankshaft rotation speed variations exceed threshold values.

If the misfiring rate exceeds the threshold value, which could cause emissions deterioration, the ECM illuminates the MIL.

DTC No.	DTC Detecting Condition	Trouble Area
P0300	Misfiring of random cylinders is detected	• Open or short in engine wire • Connector connection • Vacuum hose connection • Ignition system • Injector • Fuel pressure • Mass air flow meter • Engine coolant temperature sensor • Compression pressure • Valve clearance • Valve timing • PCV piping • ECM
P0301 P0302 P0303 P0304 P0305 P0306 P0307 P0308	Misfiring of each cylinder is detected	

HINT:
When several codes for a misfiring cylinder are recorded repeatedly but no random misfire code is recorded, it indicates that the misfires have been detected and recorded at different times.
Reference: Inspection using the oscilloscope.
With the engine idling, check the waveform between terminals #1 to #8 and E01 of the ECM connectors.
HINT:
The correct waveform is as shown in the illustration.

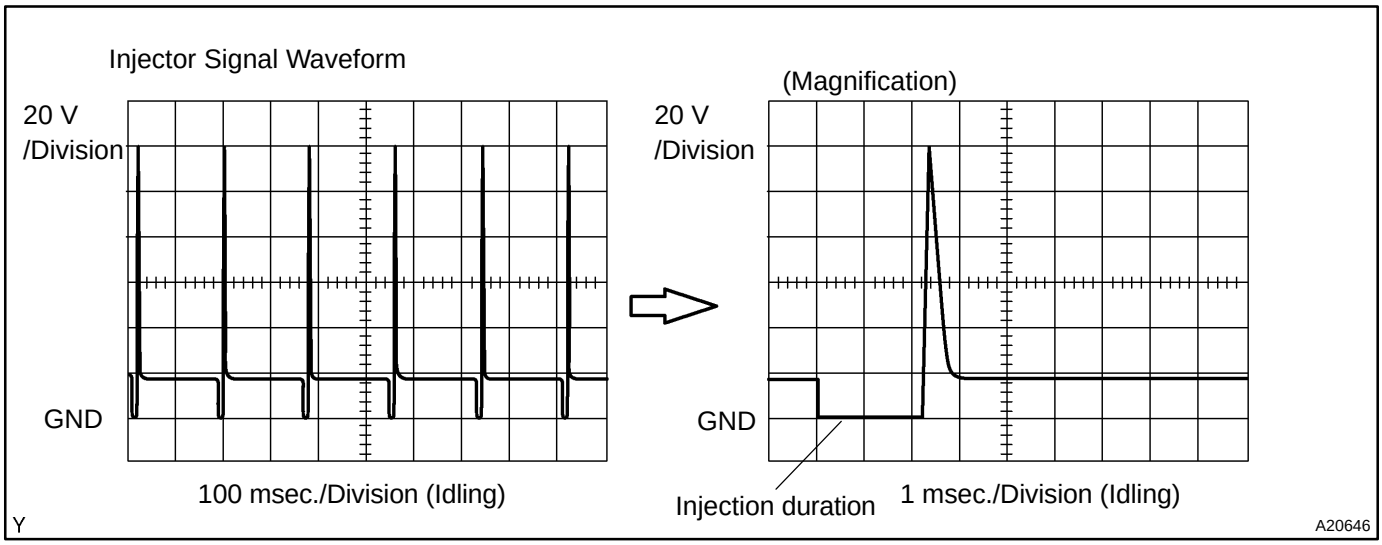

MONITOR DESCRIPTION

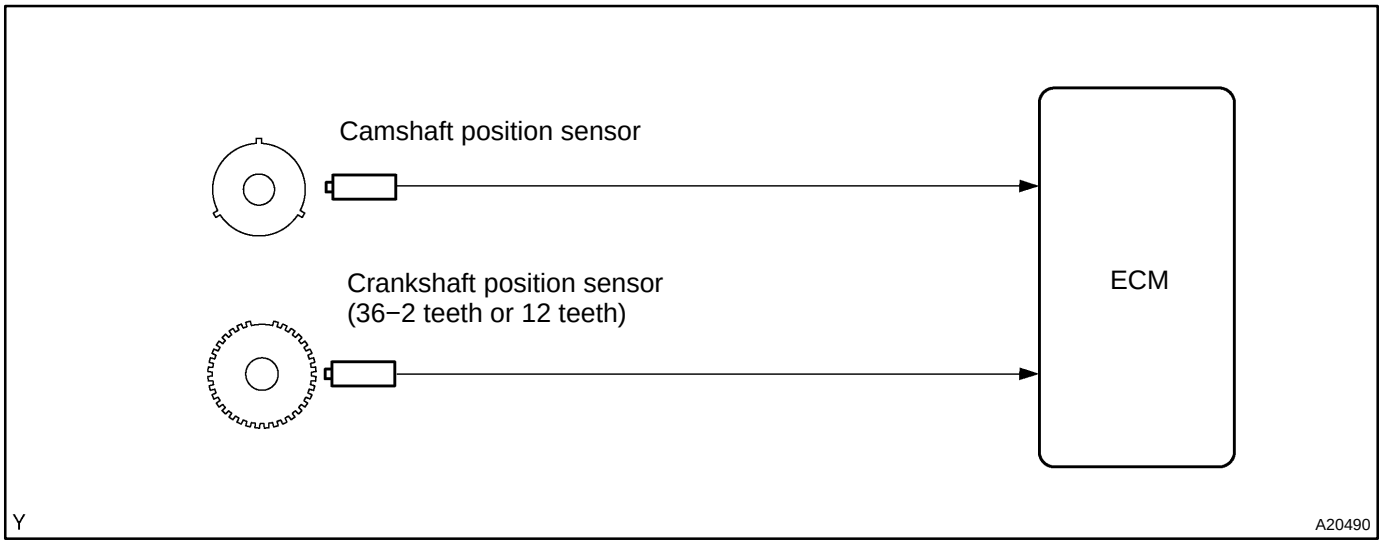

The ECM illuminates the MIL (2 trip detection logic) if:
The ECM will illuminate the MIL when the percentage of misfire exceeds the specified limit per 1,000 engine revolutions. One occurrence of excessive misfire during engine start will set the MIL. Four occurrences are required to set the MIL 1,000 revolutions after engine start.
The ECM blinks the MIL (the MIL blinks immediately) if:

- Within 200 engine revolutions at a high rpm, the threshold for ”percentage of misfire causing catalyst damage” is reached 1 time.
- Within 200 engine revolutions at a normal rpm, the threshold for ”percentage of misfire causing catalyst damage” is reached 3 time.

MONITOR STRATEGY

Related DTCs	P0300	Random/Multiple cylinder misfire detected
	P0301	Cylinder 1 misfire detected
	P0302	Cylinder 2 misfire detected
	P0303	Cylinder 3 misfire detected
	P0304	Cylinder 4 misfire detected
	P0305	Cylinder 5 misfire detected
	P0306	Cylinder 6 misfire detected
	P0307	Cylinder 7 misfire detected
	P0308	Cylinder 8 misfire detected
Required sensors/components	Main sensors/components	Camshaft position sensor, Crankshaft position sensor
	Related sensors/components	Engine coolant temperature sensor, Intake air temperature sensor, Throttle position sensor
Frequency of operation	Continuous	
Duration	Every 1,000 revolutions (soon after engine is started: 1 time, other: 4 times) (emission related misfire) Every 200 revolutions (1 or 3 times) (catalyst deteriorating misfire)	
MIL operation	2 driving cycles: MIL ON Immediate: MIL blinking (Catalyst deteriorating misfire)	
Sequence of operation	None	

TYPICAL ENABLING CONDITIONS

Item	Specification	
	Minimum	Maximum
The monitor will run whenever this DTC is not present	See page DI−437	
Battery voltage	8 V	−
Throttle position learning	Completed	
VVT system	Normal operate by scan tool	
Engine RPM	400 rpm	5,700rpm
All of the following conditions are met:	Condition 1 and 2	
1. Engine coolant temperature	−10°C (14°F)	−
2. Either of the following conditions is met:	Condition (a) or (b)	
(a) Engine coolant temperature at engine start	−7°C (19°F)	−
(b) Engine coolant temperature	20°C (68°F)	−
Fuel−cut	OFF	
Emission−related−misfire:		
First 1,000 revolutions after engine start, or check mode	Crankshaft 1,000 revolutions	
Except above	Crankshaft 1,000 revolutions x 4	
Catalyst−damage−misfire (MIL blinks):		
All of the following conditions 1, 2 and 3 are met	Crankshaft 200 revolutions	
1. Driving cycle	1st	
2. Check mode	OFF	
3. Engine RPM	−	2,800 rpm
Except above	Crankshaft 200 revolutions x 3	

TYPICAL MALFUNCTION THRESHOLDS

Detection Criteria	Threshold
Emission−related−misfire:	
Misfire rate:	1.2 % or more
Catalyst−damage−misfire (MIL blinks):	
Number of misfire per 200 revolutions	93 or more (varies with intake air amount and RPM)
Multiple cylinders misfire	Detected

MONITOR RESULT

Refer to page DI−445 for detailed information.

The test value and test limit information are described as shown in the following table. Check the monitor result and test values after performing the monitor drive pattern (refer to ”Confirmation Monitor”).

- MID (Monitor Identification Data) is assigned to each emissions−related component.
- TID (Test Identification Data) is assigned to each test value.
- Scaling is used to calculate the test value indicated on generic OBD II scan tools.

Misfire monitor − All cylinders

MID	TID	Scaling	Description of Test Value	Minimum Test Limit	Maximum Test Limit
$A1	$0B	Multiply by 1 (time)	Exponential Weighted Moving Average misfire counts for last 10 driving cycles − total	0	65535
$A1	$0C	Multiply by 1 (time)	Misfire counts for last and current driving cycles − total	0	65535

Misfire monitor − Cylinder 1

MID	TID	Scaling	Description of Test Value	Minimum Test Limit	Maximum Test Limit
$A2	$0B	Multiply by 1 (time)	Exponential Weighted Moving Average misfire counts for last 10 driving cycles − total	0	65535
$A2	$0C	Multiply by 1 (time)	Misfire counts for last and current driving cycles − total	0	65535

Misfire monitor − Cylinder 2

MID	TID	Scaling	Description of Test Value	Minimum Test Limit	Maximum Test Limit
$A3	$0B	Multiply by 1 (time)	Exponential Weighted Moving Average misfire counts for last 10 driving cycles − total	0	65535
$A3	$0C	Multiply by 1 (time)	Misfire counts for last and current driving cycles − total	0	65535

Misfire monitor − Cylinder 3

MID	TID	Scaling	Description of Test Value	Minimum Test Limit	Maximum Test Limit
$A4	$0B	Multiply by 1 (time)	Exponential Weighted Moving Average misfire counts for last 10 driving cycles − total	0	65535
$A4	$0C	Multiply by 1 (time)	Misfire counts for last and current driving cycles − total	0	65535

Misfire monitor − Cylinder 4

MID	TID	Scaling	Description of Test Value	Minimum Test Limit	Maximum Test Limit
$A5	$0B	Multiply by 1 (time)	Exponential Weighted Moving Average misfire counts for last 10 driving cycles − total	0	65535
$A5	$0C	Multiply by 1 (time)	Misfire counts for last and current driving cycles − total	0	65535

Misfire monitor − Cylinder 5

MID	TID	Scaling	Description of Test Value	Minimum Test Limit	Maximum Test Limit
$A6	$0B	Multiply by 1 (time)	Exponential Weighted Moving Average misfire counts for last 10 driving cycles − total	0	65535
$A6	$0C	Multiply by 1 (time)	Misfire counts for last and current driving cycles − total	0	65535

Misfire monitor − Cylinder 6

MID	TID	Scaling	Description of Test Value	Minimum Test Limit	Maximum Test Limit
$A7	$0B	Multiply by 1 (time)	Exponential Weighted Moving Average misfire counts for last 10 driving cycles − total	0	65535
$A7	$0C	Multiply by 1 (time)	Misfire counts for last and current driving cycles − total	0	65535

Misfire monitor − Cylinder 7

MID	TID	Scaling	Description of Test Value	Minimum Test Limit	Maximum Test Limit
$A8	$0B	Multiply by 1 (time)	Exponential Weighted Moving Average misfire counts for last 10 driving cycles − total	0	65535
$A8	$0C	Multiply by 1 (time)	Misfire counts for last and current driving cycles − total	0	65535

Misfire monitor − Cylinder 8

MID	TID	Scaling	Description of Test Value	Minimum Test Limit	Maximum Test Limit
$A9	$0B	Multiply by 1 (time)	Exponential Weighted Moving Average misfire counts for last 10 driving cycles − total	0	65535
$A9	$0C	Multiply by 1 (time)	Misfire counts for last and current driving cycles − total	0	65535

WIRING DIAGRAM

Refer to DTC P0351 on page DI−642 for the wiring diagram of the ignition system.

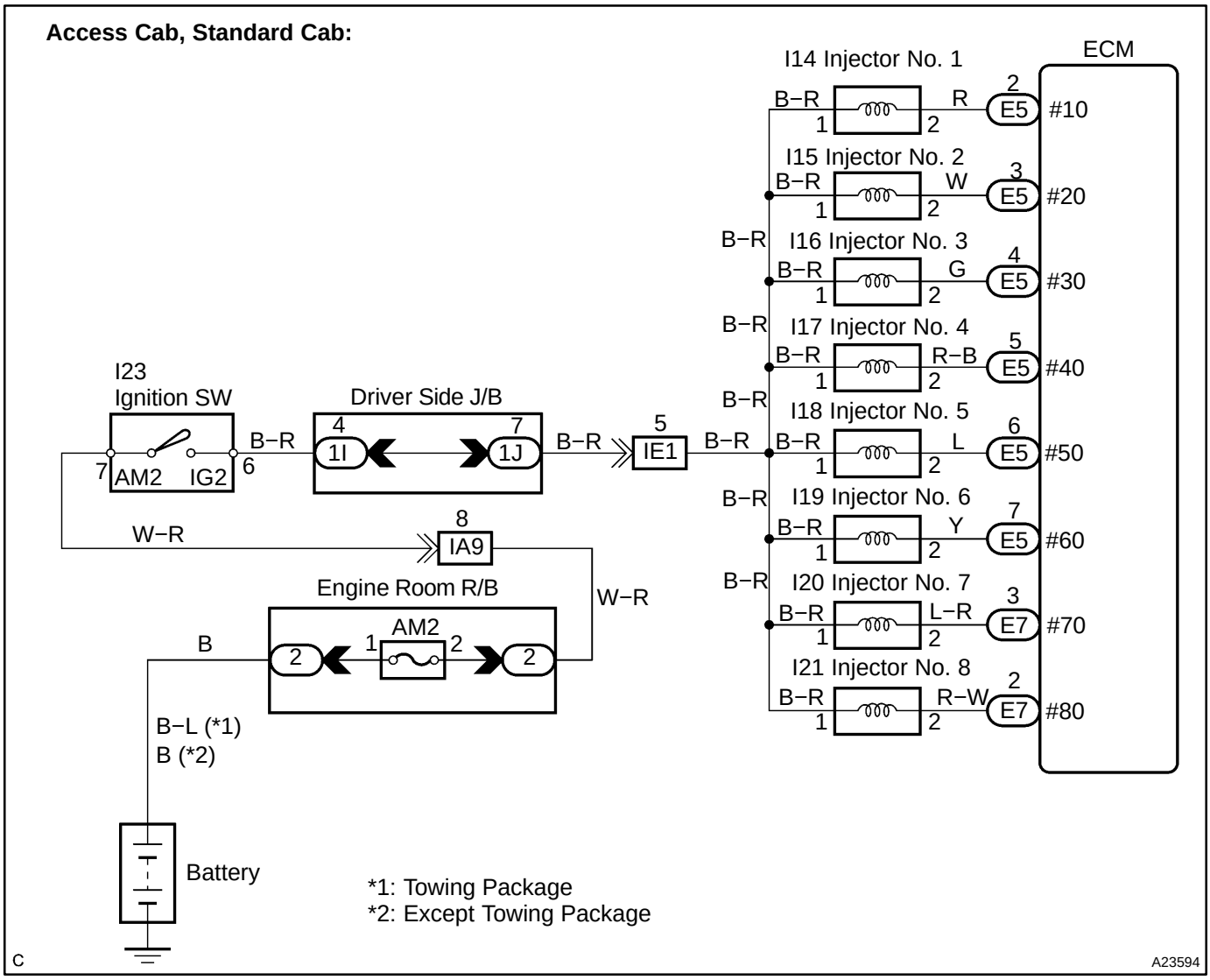

Double Cab:

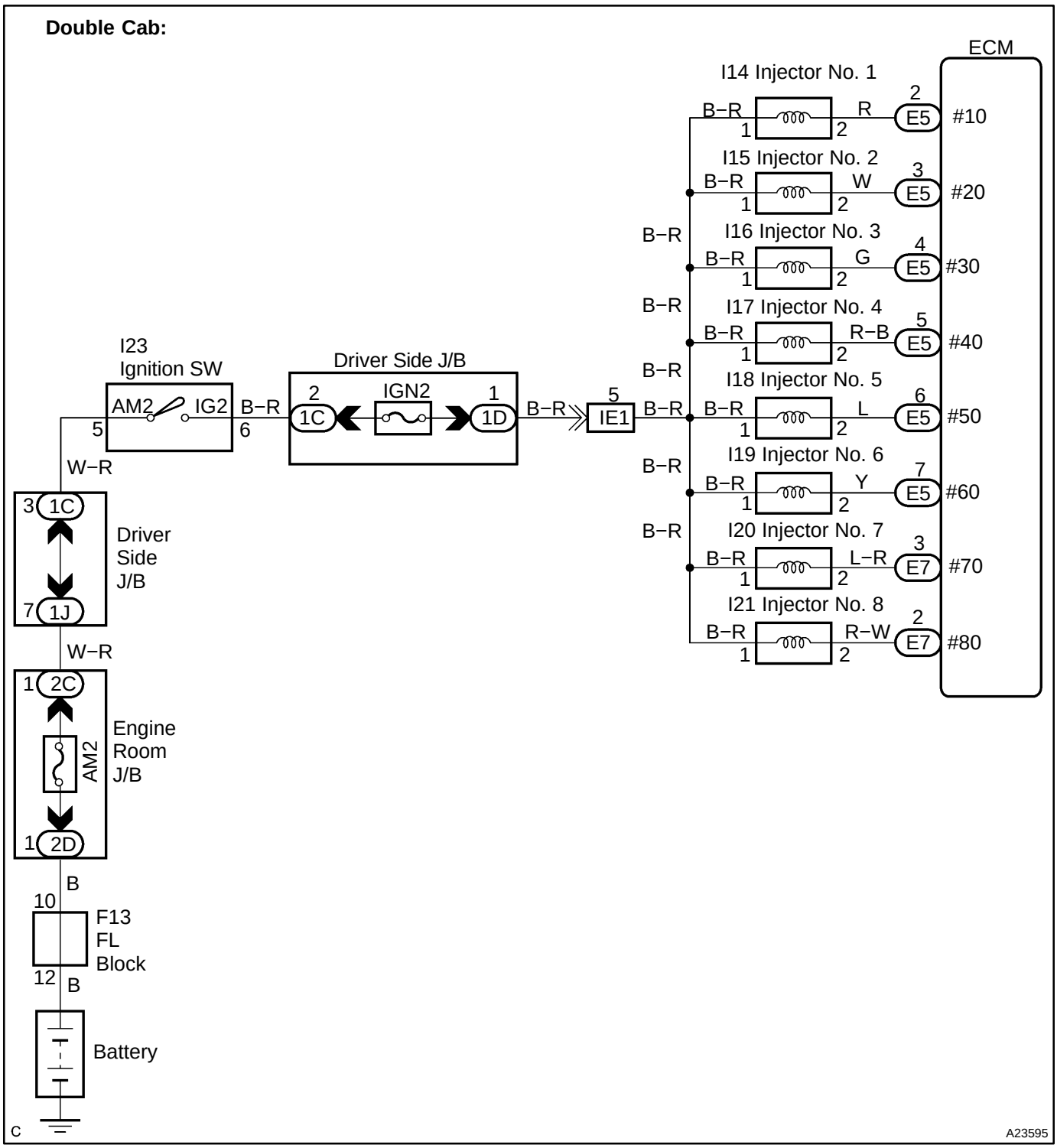
ECM
I14 Injector No. 1
I15 Injector No. 2
I16 Injector No. 3
I17 Injector No. 4
I18 Injector No. 5
I19 Injector No. 6
I20 Injector No. 7
I21 Injector No. 8
B−R
R
W
G
R−B
L
Y
L−R
R−W
E5
E7
#10
#20
#30
#40
#50
#60
#70
#80
I23
Ignition SW
AM2
IG2
Driver Side J/B
IGN2
1C
1D
IE1
W−R
Driver Side J/B
1J
2C
2D
Engine Room J/B
F13 FL Block
B
Battery
C
A23595

CONFIRMATION DRIVING PATTERN

(a) Connect the hand−held tester to the DLC3.
(b) Record DTC and the freeze frame data.
(c) Use the hand−held tester to set the check mode (See page DI−463).
(d) Read the value on the misfire counter for each cylinder when idling. If the value is displayed on the misfire counter, skip the following procedure of confirmation driving.
(e) Drive the vehicle several times with the engine speed, load and surrounding range shown as ENGINE SPD, CALC LOAD in the freeze frame data or MISFIRE RPM, MISFIRE LOAD in the DATA LIST.

If you have no hand−held tester, turn the ignition switch OFF after the symptom is simulated once. Then repeat the simulation process again.

HINT:

In order to memorize the DTC of misfire, it is necessary to drive around MISFIRE RPM, MISFIRE LOAD in the DATA LIST for the following period of time. Take care not to turn the ignition switch OFF. Turning the ignition switch OFF switches the diagnosis system from check mode to normal mode, and all DTCs, etc., are erased.

Engine Speed	Time
Idling	3 minutes 30 seconds or more
1,000 rpm	3 minutes or more
2,000 rpm	1 minute 30 seconds or more
3,000 rpm	1 minute or more

(f) Check if there is misfire, and the DTC and the freeze frame data. Record the DTC's, freeze frame data and misfire counter data.
(g) Turn the ignition switch OFF and wait for at least 5 seconds.

INSPECTION PROCEDURE

HINT:

- If DTCs besides misfire DTCs are memorized simultaneously, troubleshoot the non−misfire DTCs first.
- If the misfire does not occur when the vehicle is brought to the workshop, the misfire can be confirmed by reproducing the condition of the freeze frame data. Also, after finishing the repair, confirm that there is no misfire (See confirmation driving pattern).
- On 6 or 8 cylinder engines, misfiring cylinder identification is disabled at high engine speed and only a general misfire fault code P0300 is stored instead of a cylinder specific misfire fault code (P0301 to P0308).

  If the misfire starts in a high engine speed area or the misfire occurs only in a high engine speed area, only code P0300 may be stored.

  When only a general misfire fault code like P0300 is stored:
- Erase the general misfire fault code using the hand−held tester
- Start the engine and drive the confirmation patten.
- Read the value of the misfire ratio for each cylinder. Or read the DTC.
- Repair the cylinder that has a high misfire ratio. Or repair the cylinder indicated by the DTC.
- After finishing repairs, drive the confirmation pattern again and confirm that no misfire occurs.
- When either of SHORT FT #1, LONG FT #1, SHORT FT #2 or LONG FT #2 in the freeze frame data is over the range of ±20 %, there is a possibility that the air−fuel ratio is becoming RICH (−20 % or less) or LEAN (+20 % or more).
- When COOLANT TEMP in the freeze frame data is less than 80°C (176°F), there is a possibility of misfire only during engine warm−up.
- If the misfire cannot be reproduced, the following reasons may apply: 1) the vehicle has low fuel, 2) improper fuel is being used, or 3) the ignition plug is contaminated.
- Be sure to check the value on the misfire counter after the repair.

1	**Are there any other codes (besides DTC P0300, P0301, P0302, P0303, P0304 P0305, P0306, P0307 or P0308) being output?**

PREPARATION:

(a) Connect the hand−held tester to the DLC3.
(b) Turn the ignition switch ON and push the hand−held tester main switch ON.
(c) When using hand−held tester, enter the following menu: DIAGNOSIS / ENHANCED OBD II / DTC INFO / CURRENT CODES.

CHECK:

Read the DTCs using hand−held tester.

RESULT:

Display (DTC Output)	Proceed to
”P0300, P0301, P0302, P0303, P0304, P0305, P0306, P0307 and/or P0308”	A
”P0300, P0301, P0302, P0303, P0304, P0305, P0306, P0307 or P0308” and other DTCs	B

HINT:

If any other codes besides ”P0300, P0301, P0302, P0303, P0304, P0305, P0306, P0307 or P0308” are output, perform the troubleshooting for those DTCs.

B → **Go to relevant DTC chart (See page DI−477).**

A

2	**Check wire harness, connector and vacuum hose in engine room.**

CHECK:

(a) Check the connection conditions of the wire harness and connector.
(b) Check for the disconnection, piping and brake of the vacuum hose.

NG → **Repair or replace, then confirm that there is no misfire (See confirmation driving pattern).**

OK

3	**Check connection of PCV piping.**

OK:

PCV hose is connected correctly and is not damaged.

NG → **Repair or replace PCV piping.**

OK

4	**Connect hand−held tester, and read the number of misfire.**

PREPARATION:

(a) Connect the hand−held tester to the DLC3.
(b) Turn the ignition switch ON and push the hand−held tester main switch ON.
(c) Start the engine.
(d) When using hand−held tester, enter the following menu: DIAGNOSIS / ENHANCED OBD II / DATA LIST / ALL / CYL#1 to CYL#8.

CHECK:

Read the number of misfire on the hand−held tester.

HINT:

When a misfire is not reproduced, be sure to branch below based on the stored DTC.

RESULT:

High Misfire Rate Cylinder	Proceed to
1 or 2 cylinders	A
More than 3 cylinders	B

B → **Go to step 15.**

A

5	Check spark plug and spark of misfiring cylinder.

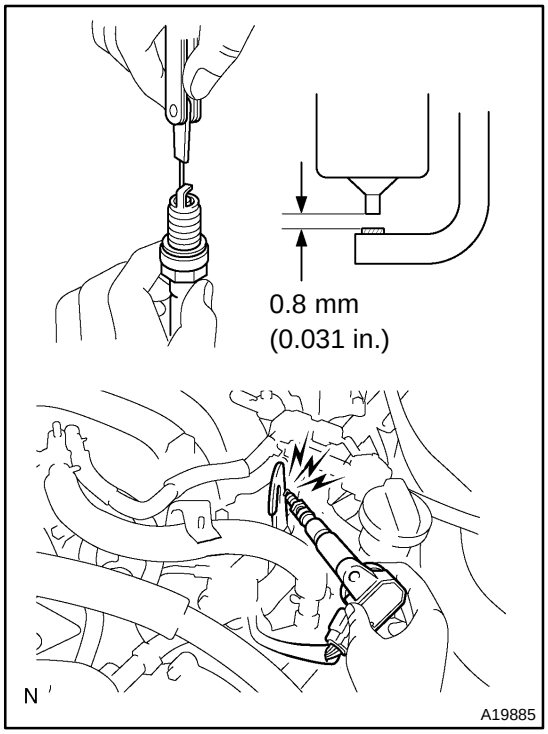

PREPARATION:

(a) Remove the ignition coil assembly.
(b) Remove the spark plug.

CHECK:

(a) Check the electrode for carbon deposits.
(b) Check the spark plug type (See page IG−1).
(c) Check electrode gap.

OK:

No large carbon deposit present.
Not wet with gasoline or oil.
Electrode gap: 0.8 mm (0.031 in.)

NOTICE:

If adjusting the gap of a new spark plug, bend only ”the base / ground” electrode. Do not touch the tip. Never attempt to adjust the gap of a used plug.

PREPARATION:

(a) Install the spark plug to the ignition coil assembly.
(b) Disconnect the injector connector.
(c) Ground spark plug.

CHECK:

Check if spark occurs while engine is being cracked.

CAUTION:

Always disconnect each injector connector.

NOTICE:

Do not crank the engine for more than 2 seconds.

OK:

Spark occurs across electrode gap.

OK	Go to step 8.

NG

6	Change normal spark plug and check spark of misfiring cylinder.

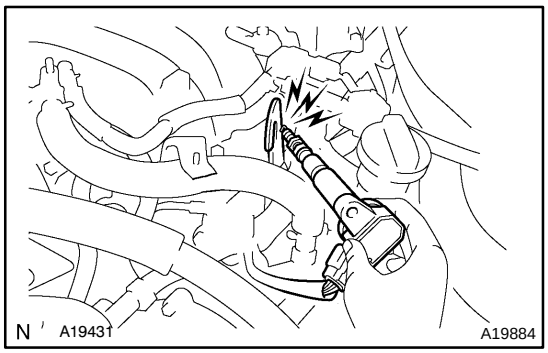

PREPARATION:

(a) Change to the normal spark plug.
  (1) Remove the spark plug that may be faulty from the ignition coil assembly.
  (2) Install another spark plug to the ignition coil assembly.
(b) Disconnect the injector connector.
(c) Ground the spark plug.

CHECK:

Check if spark occurs while the engine is being cranked.

CAUTION:

Always disconnect each injector connector.

NOTICE:

Do not crank the engine for more than 2 seconds.

OK:

Spark jumps across electrode gap.

OK	Replace spark plug.

NG

7	**Check for open and short in harness and connector between ignition coil and ECM.**

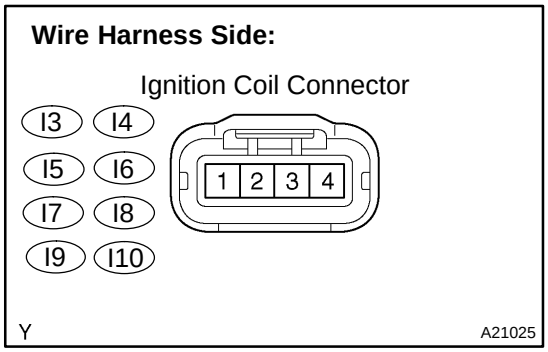

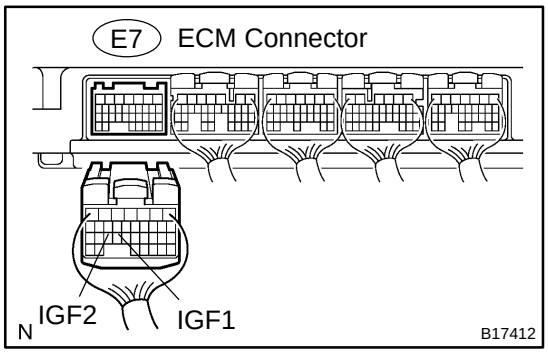

Check the harness and connector between the ignition coil and the ECM (IGF terminal) connectors:

PREPARATION:

(a) Disconnect the I3, I4, I5, I6, I7, I8, I9 or I10 ignition coil connector.

(b) Disconnect the E7 ECM connector.

CHECK:

Check the resistance between the wire harness side connectors.

OK:

Standard:

Tester Connection	Specified Condition
Ignition coil (I3−2) − IGF1 (E7−24)	Below 1 Ω
Ignition coil (I4−2) − IGF2 (E7−25)	Below 1 Ω
Ignition coil (I5−2) − IGF1 (E7−24)	Below 1 Ω
Ignition coil (I6−2) − IGF2 (E7−25)	Below 1 Ω
Ignition coil (I7−2) − IGF1 (E7−24)	Below 1 Ω
Ignition coil (I8−2) − IGF2 (E7−25)	Below 1 Ω
Ignition coil (I9−2) − IGF1 (E7−24)	Below 1 Ω
Ignition coil (I10−2) − IGF2 (E7−25)	Below 1 Ω
Ignition coil (I3−2) or IGF1 (E7−24) − Body ground	10 kΩ or higher
Ignition coil (I4−2) or IGF2 (E7−25) − Body ground	10 kΩ or higher
Ignition coil (I5−2) or IGF1 (E7−24) − Body ground	10 kΩ or higher
Ignition coil (I6−2) or IGF2 (E7−25) − Body ground	10 kΩ or higher
Ignition coil (I7−2) or IGF1 (E7−24) − Body ground	10 kΩ or higher
Ignition coil (I8−2) or IGF2 (E7−25) − Body ground	10 kΩ or higher
Ignition coil (I9−2) or IGF1 (E7−24) − Body ground	10 kΩ or higher
Ignition coil (I10−2) or IGF2 (E7−25) − Body ground	10 kΩ or higher

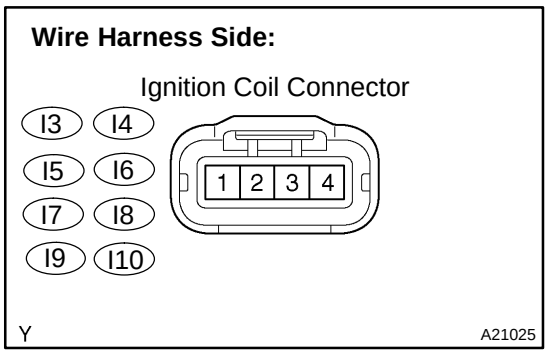

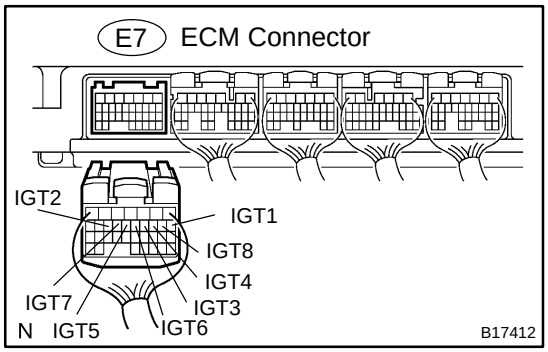

Check the harness and connector between the ignition coil and the ECM (IGT terminal) connectors:

PREPARATION:

(a) Disconnect the I3, I4, I5, I6, I7, I8, I9 or I10 ignition coil connector.

(b) Disconnect the E7 ECM connector.

CHECK:

Check the resistance between the wire harness side connectors.

OK:

Standard:

Tester Connection	Specified Condition
Ignition coil (I3−3) − IGT1 (E7−8)	Below 1 Ω
Ignition coil (I4−3) − IGT2 (E7−15)	Below 1 Ω
Ignition coil (I5−3) − IGT3 (E7−11)	Below 1 Ω
Ignition coil (I6−3) − IGT4 (E7−10)	Below 1 Ω
Ignition coil (I7−3) − IGT5 (E7−13)	Below 1 Ω
Ignition coil (I8−3) − IGT6 (E7−12)	Below 1 Ω
Ignition coil (I9−3) − IGT7 (E7−14)	Below 1 Ω
Ignition coil (I10−3) − IGT8 (E7−9)	Below 1 Ω
Ignition coil (I3−3) or IGT1 (E7−8) − Body ground	10 kΩ or higher
Ignition coil (I4−3) or IGT2 (E7−15) − Body ground	10 kΩ or higher
Ignition coil (I5−3) or IGT3 (E7−11) − Body ground	10 kΩ or higher
Ignition coil (I6−3) or IGT4 (E7−10) − Body ground	10 kΩ or higher
Ignition coil (I7−3) or IGT5 (E7−13) − Body ground	10 kΩ or higher
Ignition coil (I8−3) or IGT6 (E7−12) − Body ground	10 kΩ or higher
Ignition coil (I9−3) or IGT7 (E7−14) − Body ground	10 kΩ or higher
Ignition coil (I10−3) or IGT8 (E7−9) − Body ground	10 kΩ or higher

OK → **Replace ignition coil with igniter, then confirm that there is no misfire.**

NG

Repair or replace harness or connector.

8	Check ECM terminal of misfiring cylinder.

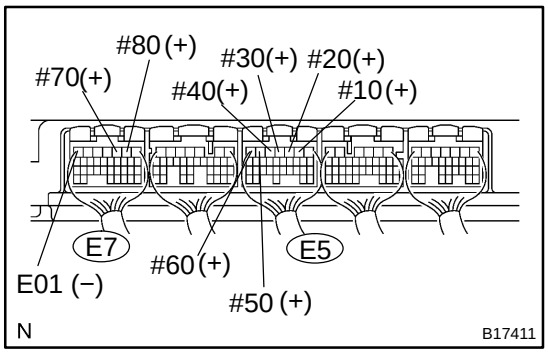

PREPARATION:

Turn the ignition switch ON.

CHECK:

Measure the voltage between the terminals of the E5 and E7 ECM connectors.

OK:

Standard:

Tester Connection	Specified Condition
#10 (E5−2) − E01 (E7−7)	9 to 14 V
#20 (E5−3) − E01 (E7−7)	9 to 14 V
#30 (E5−4) − E01 (E7−7)	9 to 14 V
#40 (E5−5) − E01 (E7−7)	9 to 14 V
#50 (E5−6) − E01 (E7−7)	9 to 14 V
#60 (E5−7) − E01 (E7−7)	9 to 14 V
#70 (E7−3) − E01 (E7−7)	9 to 14 V
#80 (E7−2) − E01 (E7−7)	9 to 14 V

OK → **Go to step 11.**

NG

9	Check injector resistance of misfiring cylinder (See page SF−24).

NG → **Replace injector.**

OK

10	**Check for open and short in harness and connector between ignition SW and injector, injector and ECM of misfiring cylinder.**

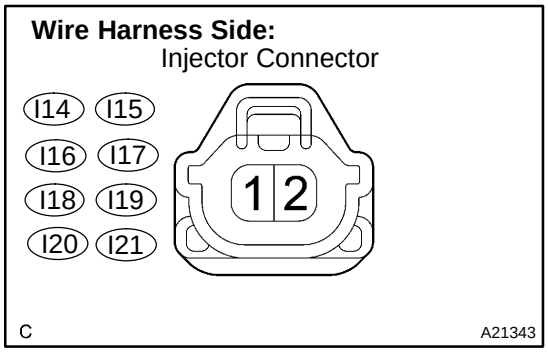

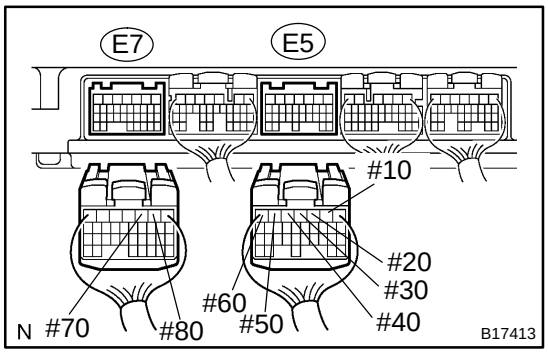

PREPARATION:

(a) Disconnect the I14, I15, I16, I17, I18, I19, I20 or I21 injector connector.

(b) Disconnect the E5 or E7 ECM connector.

CHECK:

Measure the resistance of the wire harness side connectors between the ECM and injector.

OK:

Standard:

Tester Connection	Specified Condition
Injector (I14−2) − #10 (E5−2)	Below 1 Ω
Injector (I15−2) − #20 (E5−3)	Below 1 Ω
Injector (I16−2) − #30 (E5−4)	Below 1 Ω
Injector (I17−2) − #40 (E5−5)	Below 1 Ω
Injector (I18−2) − #50 (E5−6)	Below 1 Ω
Injector (I19−2) − #60 (E5−7)	Below 1 Ω
Injector (I20−2) − #70 (E7−3)	Below 1 Ω
Injector (I21−2) − #80 (E7−2)	Below 1 Ω
Injector (I14−2) or #10 (E5−2) − Body ground	10 kΩ or higher
Injector (I15−2) or #20 (E5−3) − Body ground	10 kΩ or higher
Injector (I16−2) or #30 (E5−4) − Body ground	10 kΩ or higher
Injector (I17−2) or #40 (E5−5) − Body ground	10 kΩ or higher
Injector (I18−2) or #50 (E5−6) − Body ground	10 kΩ or higher
Injector (I19−2) or #60 (E5−7) − Body ground	10 kΩ or higher
Injector (I20−2) or #70 (E7−3) − Body ground	10 kΩ or higher
Injector (I21−2) or #80 (E7−2) − Body ground	10 kΩ or higher

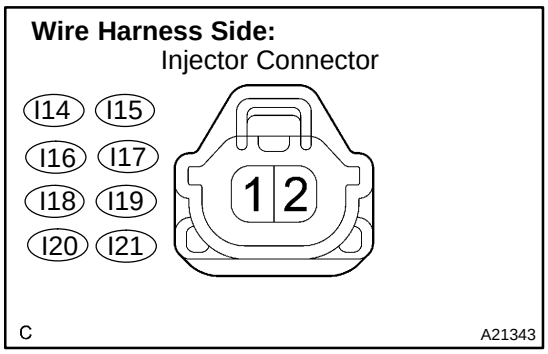

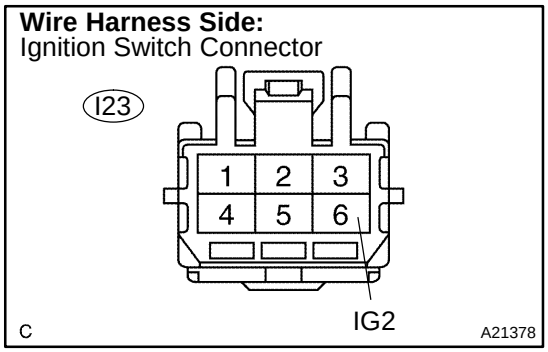

PREPARATION:

(a) Disconnect the I14, I15, I16, I17, I18, I19, I20 or I21 injector connector.

(b) Disconnect the I23 ignition switch connector.

CHECK:

Measure the resistance the wire harness side connectors between the injector and ignition switch.

OK:

Standard:

Tester Connection	Specified Condition
Injector (I14−1) − IG2 (I23−6)	Below 1 Ω
Injector (I15−1) − IG2 (I23−6)	Below 1 Ω
Injector (I16−1) − IG2 (I23−6)	Below 1 Ω
Injector (I17−1) − IG2 (I23−6)	Below 1 Ω
Injector (I18−1) − IG2 (I23−6)	Below 1 Ω
Injector (I19−1) − IG2 (I23−6)	Below 1 Ω
Injector (I20−1) − IG2 (I23−6)	Below 1 Ω
Injector (I21−1) − IG2 (I23−6)	Below 1 Ω
Injector (I14−1) or IG2 (I23−6) − Body ground	10 kΩ or higher
Injector (I15−1) or IG2 (I23−6) − Body ground	10 kΩ or higher
Injector (I16−1) or IG2 (I23−6) − Body ground	10 kΩ or higher
Injector (I17−1) or IG2 (I23−6) − Body ground	10 kΩ or higher
Injector (I18−1) or IG2 (I23−6) − Body ground	10 kΩ or higher
Injector (I19−1) or IG2 (I23−6) − Body ground	10 kΩ or higher
Injector (I20−1) or IG2 (I23−6) − Body ground	10 kΩ or higher
Injector (I21−1) or IG2 (I23−6) − Body ground	10 kΩ or higher

NG → **Repair or replace harness or connector.**

OK

11	**Check injector injection of misfiring cylinder (See page SF−29).**

NG → **Replace injector.**

OK

12	Check compression pressure of misfiring cylinder (See page EM−3).

NG → Repair or replace.

OK

13	Check valve clearance of misfiring cylinder (See page EM−4).

NG → Adjust valve clearance.

OK

14	Switch step by number of misfire cylinder (Refer to the result of step 4).

High misfire rate cylinder	Proceed to
1 or 2 cylinders	A
More than 3 cylinders	B

B → Check for intermittent problems (See page DI−430).

A

15	Check valve timing (Check for looseness or a jumped tooth of timing belt) (See page EM−9).

NG → Adjust valve timing (Repair or replace timing belt).

OK

16	**Check fuel pressure (See page SF−7).**

NG → **Check and repair fuel pump, pressure regulator, fuel pipe line and filter (See page SF−1).**

OK

17	**Check intake air temperature and mass air flow rate.**

PREPARATION:

(a) Connect the hand−held tester to the DLC3.

(b) Turn the ignition switch ON.

CHECK:

Check the intake air temperature.

(1) When using hand−held tester, enter the following menu: DIAGNOSIS / ENHANCED OBD II / DATA LIST / ALL / INTAKE AIR.

(2) Read its value displayed on the hand−held tester.

OK:

Equivalent to ambient temperature

CHECK:

Check the air flow rate.

(1) When using hand−held tester, enter the following menu: DIAGNOSIS/ENHANCED OBD II/DATA LIST/ALL/MAF.

(2) Read its value displayed on the hand−held tester.

OK:

Condition	Air Flow Rate (gm/s)
Ignition switch ON (do not start engine)	0
Idling	4 to 6
Running without load (2,500 rpm)	13 to 20
Idling to quickly accelerating	Air flow rate fluctuates

NG → **Replace mass air flow meter.**

OK

18	Check engine coolant temperature sensor.

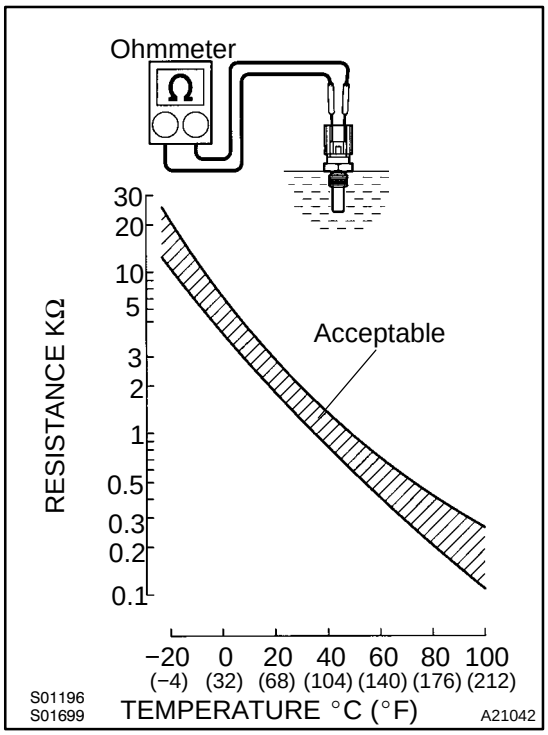

PREPARATION:

Remove the engine coolant temperature sensor.

CHECK:

Measure the resistance between the terminals of the engine coolant temperature sensor.

Resistance:

Tester Connection	Specified Condition
1 − 2	2.32 to 2.59 kΩ (20°C (68°F))
1 − 2	0.310 to 0.326 kΩ (80°C (176°F))

NOTICE:

In case of checking the engine coolant temperature sensor in the water, be careful not to allow water to go into the terminals. After checking, dry the sensor.

HINT:

Alternate procedure: Connect an ohmmeter to the installed engine coolant temperature sensor and read the resistance. Use an infrared thermometer to measure the engine temperature in the immediate vicinity of the sensor. Compare these values to the resistance/temperature graph. Change the engine temperature (by warming up or cooling down) and repeat the test.

NG → **Replace engine coolant temperature sensor.**

OK

19	Switch step by number of misfire cylinder (Refer to the result of step 4).

High misfire rate cylinder	Proceed to
1 or 2 cylinders	A
More than 3 cylinders	B

B → **Go to step 5.**

A

Check for intermittent problems (See page DI−430).

DIDRA−01

DTC	P0031	Oxygen (A/F) Sensor Heater Control Circuit Low (Bank 1 Sensor 1)

DTC	P0032	Oxygen (A/F) Sensor Heater Control Circuit High (Bank 1 Sensor 1)

DTC	P0051	Oxygen (A/F) Sensor Heater Control Circuit Low (Bank 2 Sensor 1)

DTC	P0052	Oxygen (A/F) Sensor Heater Control Circuit High (Bank 2 Sensor 1)

HINT:
Although each DTC title (DTC description) says ”oxygen sensor”, these DTCs are related to the ”A/F sensor”.

CIRCUIT DESCRIPTION

Refer to DTC P2195 on page DI−806.

HINT:
The ECM provides a pulse width modulated control circuit to adjust current through the heater. The A/F sensor heater circuit uses a relay on the B+ side of the circuit.

Reference (Bank 1 Sensor 1 System Drawing):

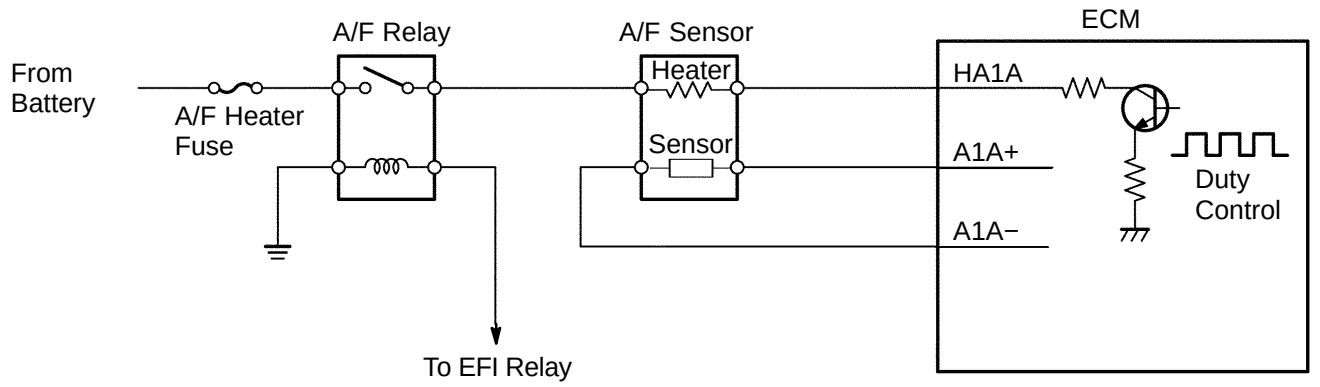

DTC No.	DTC Detection Condition	Trouble Area
P0031 P0051	Heated current is 0.8 A or less when heater operates (1 trip detection logic)	• Open or short in heater circuit of A/F sensor • A/F sensor heater • A/F sensor heater relay • ECM
P0032 P0052	When the heater operates, heated current exceeds 19.7 A (1 trip detection logic)	

HINT:

- Bank 1 refers to the bank that includes cylinder No.1.
- Bank 2 refers to the bank that does not include cylinder No.1.
- Sensor 1 refers to the sensor closest to the engine assembly.
- Sensor 2 refers to the sensor farthest away from the engine assembly.

MONITOR DESCRIPTION

The ECM uses the Air−Fuel Ratio sensor (A/F sensor) information to regulate the air−fuel ratio close to the stoichiometric ratio. This maximizes the catalytic converter's ability to purify exhaust gases. The sensor detects oxygen levels in the exhaust gas and sends this signal to the ECM.

The inner surface of the sensor element is exposed to outside air. The outer surface of the sensor element is exposed to exhaust gas. The sensor element is made of platinum coated zirconia and includes an integrated heating element. The zirconia element generates a small voltage when there is a large difference in the oxygen concentrations of the exhaust and the outside air. The platinum coating amplifies the voltage generation. When heated, the sensor becomes very efficient. If the temperature of the exhaust is low, the sensor will not generate useful voltage signals without supplemental heating. The ECM regulates the supplemental heating using a duty−cycle approach to regulate the average current in the heater element. If the heater current is out of the normal range, the sensor's output signals will be inaccurate and the ECM can not regulate the air−fuel ratio properly.

When the heater current is out of the normal operating range, the ECM interprets this as a malfunction and sets a DTC.

MONITOR STRATEGY

Related DTCs	P0031	A/F sensor heater (Bank 1) range check (Low current)
	P0032	A/F sensor heater (Bank 1) range check (High current)
	P0051	A/F sensor heater (Bank 2) range check (Low current)
	P0052	A/F sensor heater (Bank 2) range check (High current)
Required sensors/components	Main sensors/components	A/F sensor heater
	Related sensors/components	−
Frequency of operation	Continuous	
Duration	10 sec.	
MIL operation	Immediate	
Sequence of operation	None	

TYPICAL ENABLING CONDITIONS

Item	Specification	
	Minimum	Maximum
The monitor will run whenever this DTC is not present	See page DI−437	
P0031, P0051 (Low current):		
Battery voltage	10.5 V	−
A/F sensor heater duty ratio	50%	−
Time after engine start	10 sec.	−

P0032, P0052 (High current):		
Time after engine start	10 sec.	−

TYPICAL MALFUNCTION THRESHOLDS

Detection Criteria	Threshold
P0031, P0051 (Low current):	
A/F sensor heater current	Less than 0.8 A
P0032, P0052 (High current):	
A/F sensor heater current	More than 10 A

COMPONENT OPERATING RANGE

Parameter	Standard Value
A/F sensor heater current	1.8 to 3.4 A at 20˚C (68˚F)

WIRING DIAGRAM

Refer to DTC P2195 on page DI−806.

INSPECTION PROCEDURE

HINT:

Read freeze frame data using a hand−held tester. Freeze frame data record the engine condition when malfunctions are detected. When troubleshooting, freeze frame data can help determine if the vehicle was moving or stationary, if the engine was warmed up or not, if the air−fuel ratio was lean or rich, and other data, from the time the malfunction occurred.

1	**Check resistance of air−fuel ratio (A/F) sensor heater.**

Component Side:

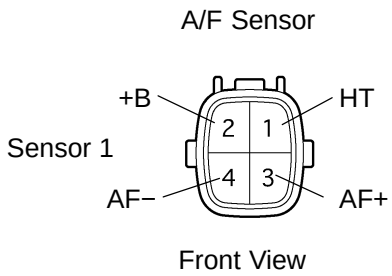

PREPARATION:

Disconnect the air−fuel ratio (A/F) sensor connector.

CHECK:

Measure resistance between the terminals of the A/F sensor connector.

OK:

Standard:

Tester Connection	Specified Condition
HT (1) − +B (2)	1.8 Ω to 3.4 Ω at 20°C (68°F)
HT (1) − AF− (4)	10 kΩ or higher

NG	**Replace air−fuel ratio (A/F) sensor.**

OK

2	Check A/F relay.

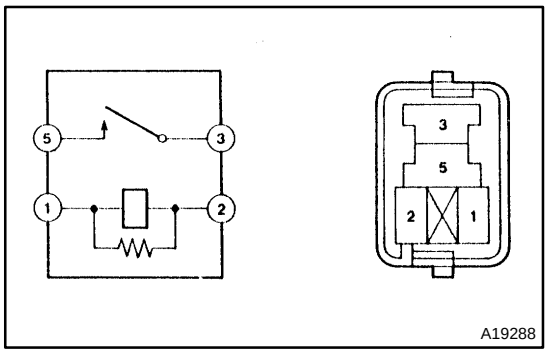

PREPARATION:
Remove the A/F relay from the engine room R/B No.2.
CHECK:
Inspect the A/F relay.
OK:

Standard:

Terminal No.	Condition	Specified Condition
3 − 5	Always	10 KΩ or higher
3 − 5	Apply B+ between terminals 1 and 2	Below 1 Ω

NG → **Replace A/F relay.**

OK

3	Check voltage between terminals HA1A, HA2A of ECM connectors and body ground.

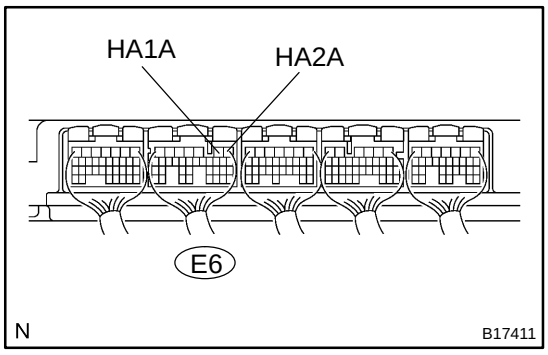

PREPARATION:
Turn the ignition switch ON.
CHECK:
Measure the voltage between terminals of the ECM connectors and body ground.
HINT:
- Connect terminal HA1A to the bank 1 sensor 1.
- Connect terminal HA2A to the bank 2 sensor 1.

OK:

Standard:

Tester Connection	Specified Condition
HA1A (E6−2) − Body ground	9 V to 14 V
HA2A (E6−1) − Body ground	9 V to 14 V

OK → **Replace ECM (See page SF−82).**

NG

4	**Check for open and short in harness and connector between ECM and A/F sensor.**

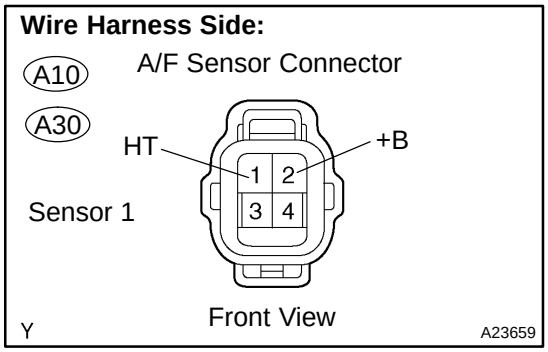

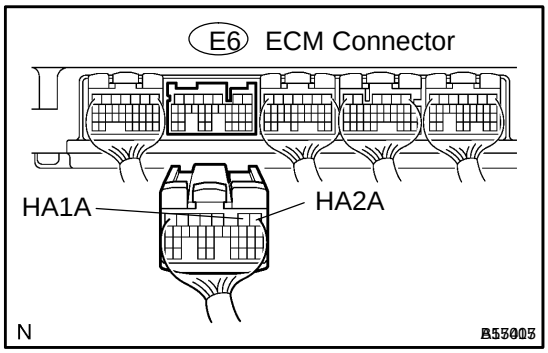

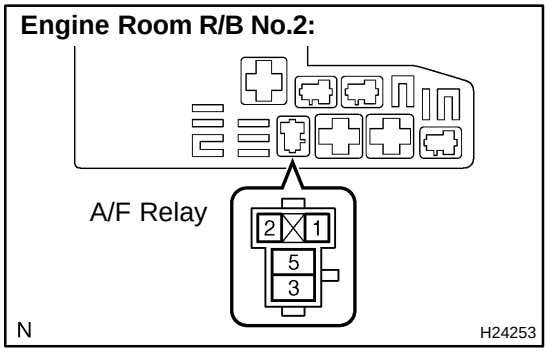

PREPARATION:

(a) Turn the ignition switch to OFF.
(b) Disconnect the A10 or A30 A/F sensor connector.
(c) Disconnect the E6 ECM connector.

CHECK:

Check the resistance.

OK:

Standard (Check for open):

Tester Connections	Specified Conditions
HT (A10−1) − HA1A (E6−2) HT (A30−1) − HA2A (E6−1)	Below 1 Ω

Standard (Check for short):

Tester Connections	Specified Conditions
HT (A10−1) or HA1A (E6−2) − Body ground HT (A30−1) or HA2A (E6−1) − Body ground	10 kΩ or higher

PREPARATION:

(a) Turn the ignition switch to OFF.
(b) Disconnect the A10 or A30 A/F sensor connector.
(c) Remove A/F relay from engine room R/B No.2.

CHECK:

Check the resistance.

OK:

Standard (Check for open):

Tester Connections	Specified Conditions
+B (A10−2) − A/F relay (3) +B (A30−2) − A/F relay (3)	Below 1 Ω

Standard (Check for short):

Tester Connections	Specified Conditions
+B (A10−2) or A/F relay (3) − Body ground +B (A30−2) or A/F relay (3) − Body ground	10 kΩ or higher

NG → **Repair or replace harness or connector.**

OK →

Check for intermittent problems (See page DI−430).

DIDRJ−01

DTC	P0335	Crankshaft Position Sensor ”A” Circuit

DTC	P0339	Crankshaft Position Sensor ”A” Circuit Intermittent

CIRCUIT DESCRIPTION

The crankshaft position sensor system consists of a crankshaft position sensor plate and a pick−up coil. The sensor plate has 32 teeth and is installed on the crankshaft. The pick−up coil is made of an iron core and magnet. The sensor plate rotates and as each tooth passes through the pick−up coil, a pulse signal is created. The pick−up coil generates 32 signals for each engine revolution. Based on these signals, the ECM calculates the crankshaft position and engine RPM. Using these calculations, the fuel injection time and ignition timing are controlled.

DTC No.	DTC Detecting Condition	Trouble Area
P0335	No crankshaft position sensor signal to ECM during cranking (2 trip detection logic) No crankshaft position sensor signal to ECM with engine speed 450 rpm or more (1 trip detection logic)	• Open or short in crankshaft position sensor circuit • Crankshaft position sensor • Signal plate • ECM
P0339	In condition (a), (b) and (c), when no crankshaft position sensor (NE) signal is input for 0.05 sec. or more. : (1 trip detection logic) (c) Engine revolution 1,000 rpm or more (d) STA signal is OFF (e) 3 sec. or more has lapsed after STA signal is switched from ON to OFF.	• Open or short in crankshaft position sensor circuit • Crankshaft position sensor • Signal plate • ECM

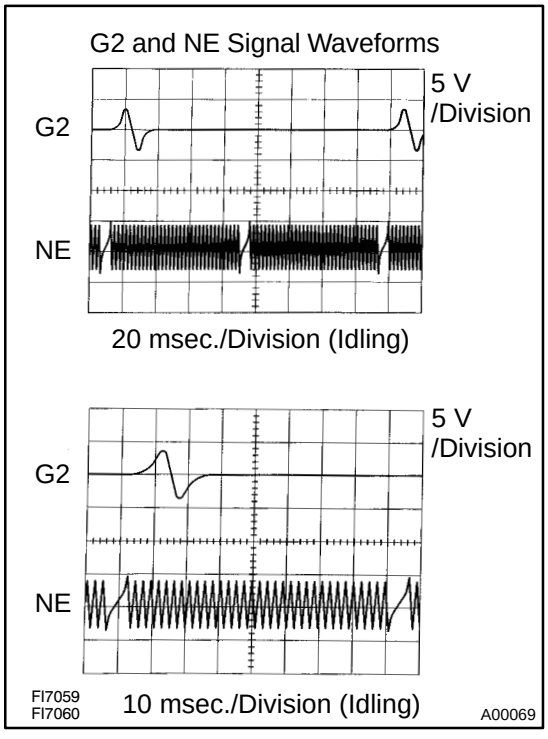

Reference: Inspection using the oscilloscope.

The correct waveform is as shown in the illustration.

Tester Connection	Specified Condition
VV1+ (E5−25) − VV1− (E5−24)	Correct waveform is as shown
VV2+ (E5−18) − VV2− (E5−28)	
NE+ (E5−21) − NE− (E5−20)	

MONITOR DESCRIPTION

If there are no signals from the crankshaft sensor even though the engine is revolving, the ECM interprets this as a malfunction of the sensor.

MONITOR STRATEGY

Related DTCs	P0335	Crankshaft position sensor range check or rationality
Required sensors/components	Main sensors/components	Crankshaft position sensor
	Related sensors/components	Engine speed sensor
Frequency of operation	Continuous	
Duration	Case 1: 0.016 sec. Case 2: 3 times	
MIL operation	Immediate	
Sequence of operation	None	

TYPICAL ENABLING CONDITIONS

Item	Specification	
	Minimum	Maximum
The monitor will run whenever this DTC is not present	See page DI−437	
Case 1:		
Engine speed	450 rpm	−
Starter	OFF	
Time after starter ON to OFF	3 sec.	−
Case 2:		
Time after starter OFF to ON	0.3 sec.	−
Number of camshaft position sensor signal pulse	6	−
Battery voltage	7 V	−
Ignition switch	ON	
Camshaft position sensor circuit fail	Not detected	

TYPICAL MALFUNCTION THRESHOLDS

Detection Criteria	Threshold
Case 1:	
Engine speed signal	No signal
Case 2:	
Number of crankshaft position sensor signal pulse	132 or less, or 174 or more

WIRING DIAGRAM

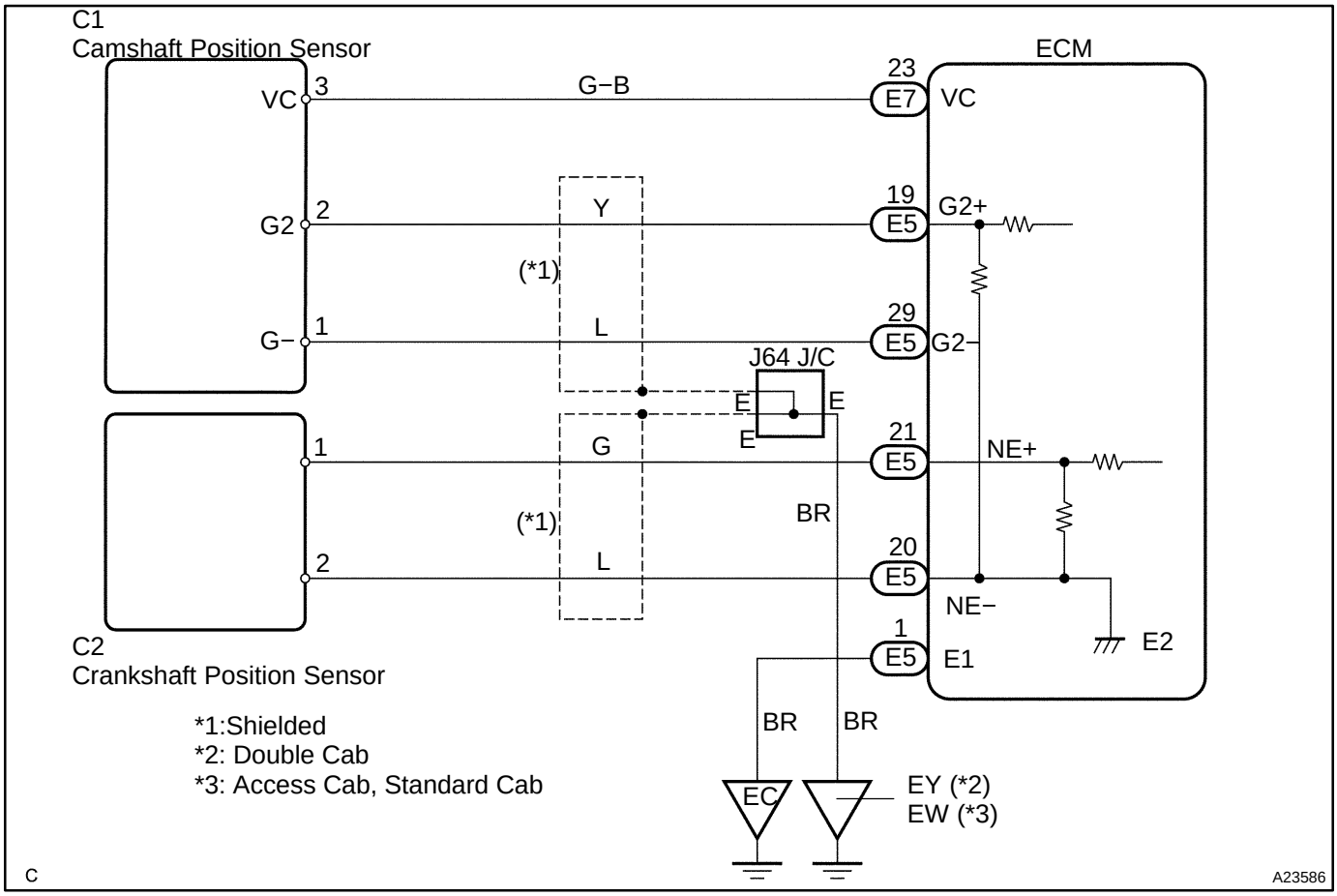

INSPECTION PROCEDURE

HINT:

- Read freeze frame data using the hand−held tester. Freeze frame records the engine conditions when a malfunction is detected. When troubleshooting it is useful for determining whether the vehicle was running or stopped. the engine was warmed up or not, the air−fuel ratio lean or rich, etc. at the time of the malfunction.
- READ VALUE ON HAND−HELD TESTER

(a) Connect the hand−held tester to the DLC3.
(b) Start the engine and push the hand−held tester tool main switch ON.
(c) When using hand−held tester, enter the following menu: ”DIAGNOSIS / ENHANCED OBD II / DATA LIST / ALL / ENGINE SPD”.

- The engine speed can be confirmed in DATA LIST using the hand−held tester. If there are no NE signals from the crankshaft position sensor despite the engine revolving, the engine speed will be indicated as zero. If voltage output of the crankshaft position sensor is insufficient, the engine speed will be indicated as lower RPM (than the actual RPM).

1	Check resistance of crankshaft position sensor.

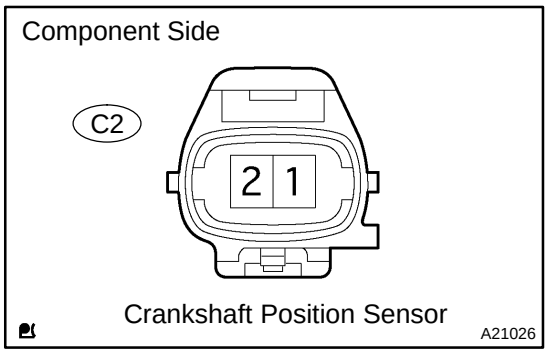

PREPARATION:

Disconnect the C2 crankshaft position sensor connector.

CHECK:

Measure the resistance between terminals 1 and 2.

OK:

Standard:

Tester Connection	Specified Condition
1 − 2	985 to 1,600 Ω at cold
1 − 2	1,265 to 1,890 Ω at hot

NOTICE:

" Cold" and "Hot" shown above mean the temperature of the coils themselves. "Cold" is form −10˚C (14˚F) to 50˚C (122˚F) and "Hot" is from 50˚C (122˚F) to 100˚C (212˚F).

NG → **Replace crankshaft position sensor.**

OK

2	Check for open and short in harness and connector between ECM and crankshaft position sensor.

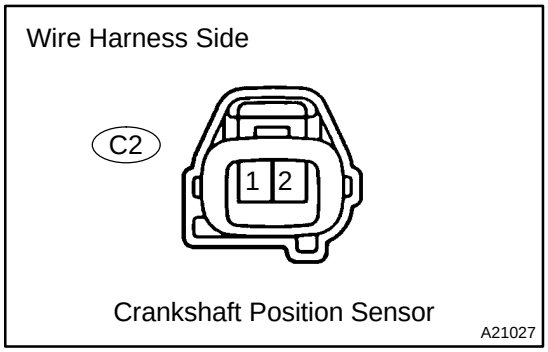

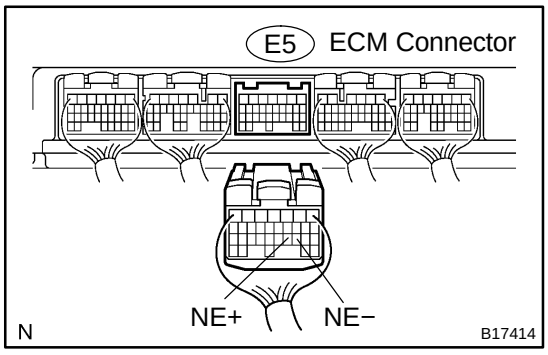

PREPARATION:

(a) Disconnect the C2 crankshaft position sensor connector.

(b) Disconnect the E5 ECM connector.

CHECK:

Measure the resistance between the wire harness side connectors.

OK:

Standard:

Tester Connection	Specified Condition
Crankshaft position sensor (C2−1) − NE+ (E5−21)	Below 1 Ω
Crankshaft position sensor (C2−2) − NE− (E5−20)	Below 1 Ω
Crankshaft position sensor (C2−1) or NE+ (E5−21) − Body ground	10 kΩ or higher
Crankshaft position sensor (C2−2) or NE− (E5−20) − Body ground	10 kΩ or higher

NG → **Repair or replace harness or connector.**

OK

3	Check sensor installation (crankshaft position sensor).

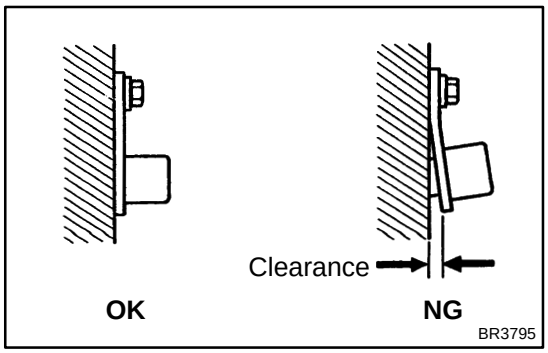

CHECK:
Check the crankshaft position sensor installation.
OK:
The crankshaft position sensor is installed properly.

NG → **Tighten sensor installation bolt.**

OK →

4	Inspect teeth of sensor plate.

PREPARATION:
Remove the crankshaft angle sensor plate (See page EM−98).
CHECK:
Check the teeth of sensor plate.

NG → **Replace sensor plate.**

OK →

Replace ECM (See page SF−82).

DIDRB−01

DTC	**P0037**	**Oxygen Sensor Heater Control Circuit Low (Bank 1 Sensor 2)**

DTC	**P0038**	**Oxygen Sensor Heater Control Circuit High (Bank 1 Sensor 2)**

DTC	**P0057**	**Oxygen Sensor Heater Control Circuit Low (Bank 2 Sensor 2)**

DTC	**P0058**	**Oxygen Sensor Heater Control Circuit High (Bank 2 Sensor 2)**

CIRCUIT DESCRIPTION

To obtain a high purification rate for the CO, HC and NOx components of the exhaust gas, a three−way catalytic converter is used, but for the most efficient use of the three−way catalytic converter, the air−fuel ratio must be precisely controlled so that it is always close to the stoichiometric air−fuel ratio.

The heated oxygen sensor has the characteristic which its output voltage changes suddenly in the vicinity of the stoichiometric air−fuel ratio. This characteristic is used to detect the oxygen concentration in the exhaust gas and provide the ECM with feedback to control the air−fuel ratio.

When the air−fuel ratio becomes LEAN, the oxygen concentration in the exhaust increases and the heated oxygen sensor informs the ECM of the LEAN condition (low voltage, i.e. less than 0.45 V).

When the air−fuel ratio is RICHER than the stoichiometric air−fuel ratio, the oxygen concentration in the exhaust gas is reduced and the heated oxygen sensor informs the ECM of the RICH condition (high voltage, i.e. more than 0.45 V). The ECM judges by the voltage output from the heated oxygen sensor whether the air−fuel ratio is RICH or LEAN and controls the injection time accordingly. However, if malfunction of the heated oxygen sensor causes output of abnormal voltage, this disables the ECM for performing an accurate air−fuel ratio control. The heated oxygen sensors include a heater which heats the zirconia element. The heater is controlled by the ECM. When the intake air volume is low (the temperature of the exhaust gas is low) current flows to the heater to heat the sensor for accurate oxygen concentration detection.

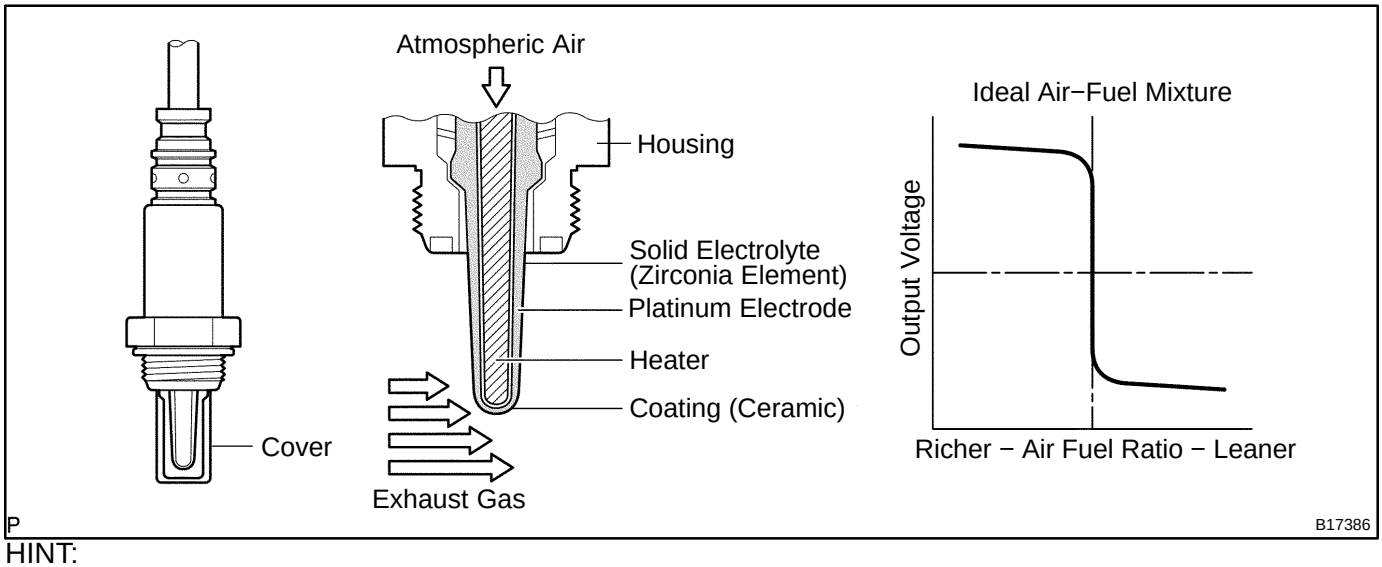

HINT:

The ECM provides a pulse width modulated control circuit to adjust current through the heater. The heated oxygen sensor heater circuit uses a relay on the B+ side of the circuit.

Reference (Bank 1 Sensor 1 System Drawing):

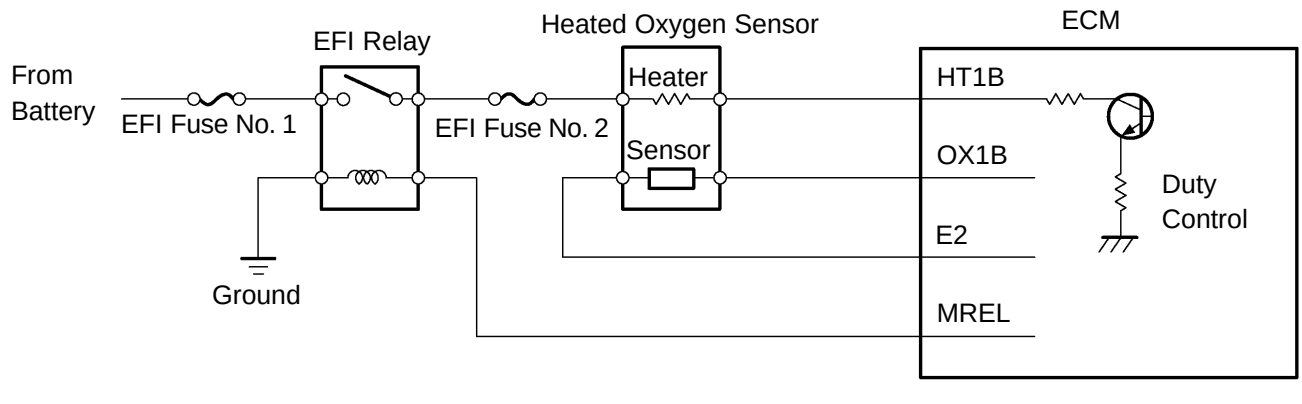

DTC No.	DTC Detecting Condition	Trouble Area
P0037 P0057	Heater current is 0.25 A or less when the heater operates with more than 10.5 V positive battery voltage	• Open in heater circuit of heated oxygen sensor • Heated oxygen sensor heater • EFI relay • ECM
P0038 P0058	When heater operates, heater current exceeds 2.0 A	• Short in heater circuit of heated oxygen sensor • Heated oxygen sensor heater • EFI relay • ECM

HINT:

- Bank 1 refers to bank that includes cylinder No. 1.
- Bank 2 refers to bank that does not includes cylinder No. 1.
- Sensor 1 refers to the sensor closer to the engine assembly.
- Sensor 2 refers to the sensor farther away from the engine assembly.

MONITOR DESCRIPTION

The sensing portion of the heated oxygen sensor has a zirconia element which is used to detect oxygen concentration in the exhaust. If the zirconia element is at the proper temperature and difference of the oxygen concentration between the inside and outside surface of sensor is large, the zirconia element will generate voltage signals. In order to increase the oxygen concentration detecting capacity in the zirconia element, the ECM supplements the heat from the exhaust with heat from a heating element inside the sensor. When current in the sensor is out of the standard operating range, the ECM interprets this as a fault in the heated oxygen sensor and sets a DTC.

Example:

The ECM will set a high current DTC if the current in the sensor is more than 2.0 A when the heater is OFF. Similarly, the ECM will set a low current DTC if the current is less than 0.3 A when the heater is ON.

MONITOR STRATEGY

Related DTCs	P0037	Rear HO2S heater (Bank 1) range check (Low Current)
	P0038	Rear HO2S heater (Bank 1) range check (High Current)
	P0057	Rear HO2S heater (Bank 2) range check (Low Current)
	P0058	Rear HO2S heater (Bank 2) range check (High Current)
Required sensors/components	Main sensors/components	HO2S heater
	Related sensors/components	Vehicle speed sensor (VSS)
Frequency of operation	Continuous	
Duration	P0037, P0057: 0.5 seconds P0038, P0058: 0.3 seconds	
MIL operation	Immediate	
Sequence of operation	None	

TYPICAL ENABLING CONDITIONS

Item	Specification	
	Minimum	Maximum
The monitor will run whenever this DTC is not present	See page DI−437	
All:		
Battery voltage	10.5 V	−
Engine	Running	
Starter	OFF	
Catalyst intrusive monitoring	Not operating	
Intrusive heating	Not operating	
P0037, P0057 (Low current):		
When the following conditions are met:	0.5 sec.	−
1. All of the following conditions are met:	Condition (a), (b), (c), (d) and (e)	
(a) Learned heater current during heater OFF	Completed	
(b) Intrusive heating	Not operating	
(c) Heating is OFF	−	0.1 sec.
(d) Heater current	−	0.3 A
(e) Intrusive heating for high current monitor	Not operating	
2. Following condition is met:	−	
Time after heaters are OFF	1 sec.	−
P0038, P0058 (High current):		
When the following conditions are met:	0.3 sec.	−
1. All of the following conditions are met:	Condition (a), (b), (c) and (d)	
(a) Learned heater current during heater OFF	Completed	
(b) Intrusive heating	Not operating	
(c) Heating is OFF	−	0.1 sec.
(d) Heater current	2 A	−
2. Following condition is met:	−	
Time after heaters are OFF	1 sec.	−

TYPICAL MALFUNCTION THRESHOLDS

Detection Criteria	Threshold
P0037, P0057 (Low current):	
Heater	ON
Heater current	Less than 0.3 A
Intrusive heating	Operating
P0038, P0058 (High current):	
Either of the following conditions is met:	Condition 1 or 2
1. All of the following conditions (a) and (b) are met:	With intrusive heating
(a) Heater	ON
(b) Heater current	2 A or more
2. All of the following conditions (c), (d) and (e) are met:	Without intrusive heating
(c) Intrusive heating of learned heater current	Operating
(d) Learned heater current during heater OFF	Operating
(e) Heater current	More than 2 A

COMPONENT OPERATING RANGE

Parameter	Standard Value
HO2S heater current	0.4 to 1 A (at idle, warmed−up engine and +B: 11 to 14 V)

MONITOR RESULT

Refer to page DI−445 for detailed information.

The test value and test limit information are described as shown in the following table. Check the monitor result and test values after performing the monitor drive pattern (see page DI−446).

- TID (Test Identification Data) is assigned to each emissions−related component.
- TLT (Test Limit Type):
  If TLT is 0, the component is malfunctioning when the test value is higher than the test limit.
  If TLT is 1, the component is malfunctioning when the test value is lower than the test limit.
- CID (Component Identification Data) is assigned to each test value.
- Unit Conversion is used to calculate the test value indicated on generic OBD II scan tools.

TID $04: HO2S heater

TLT	CID	Unit Conversion	Description of Test Data	Description of Test Limit
1	$02	Multiply by 0.000076 (A)	Maximum HO2S heater current (Bank 1 Sensor 2)	Malfunction threshold for HO2S heater
1	$20	Multiply by 0.000076 (A)	Maximum HO2S heater current (Bank 2 Sensor 2)	Malfunction threshold for HO2S heater

WIRING DIAGRAM

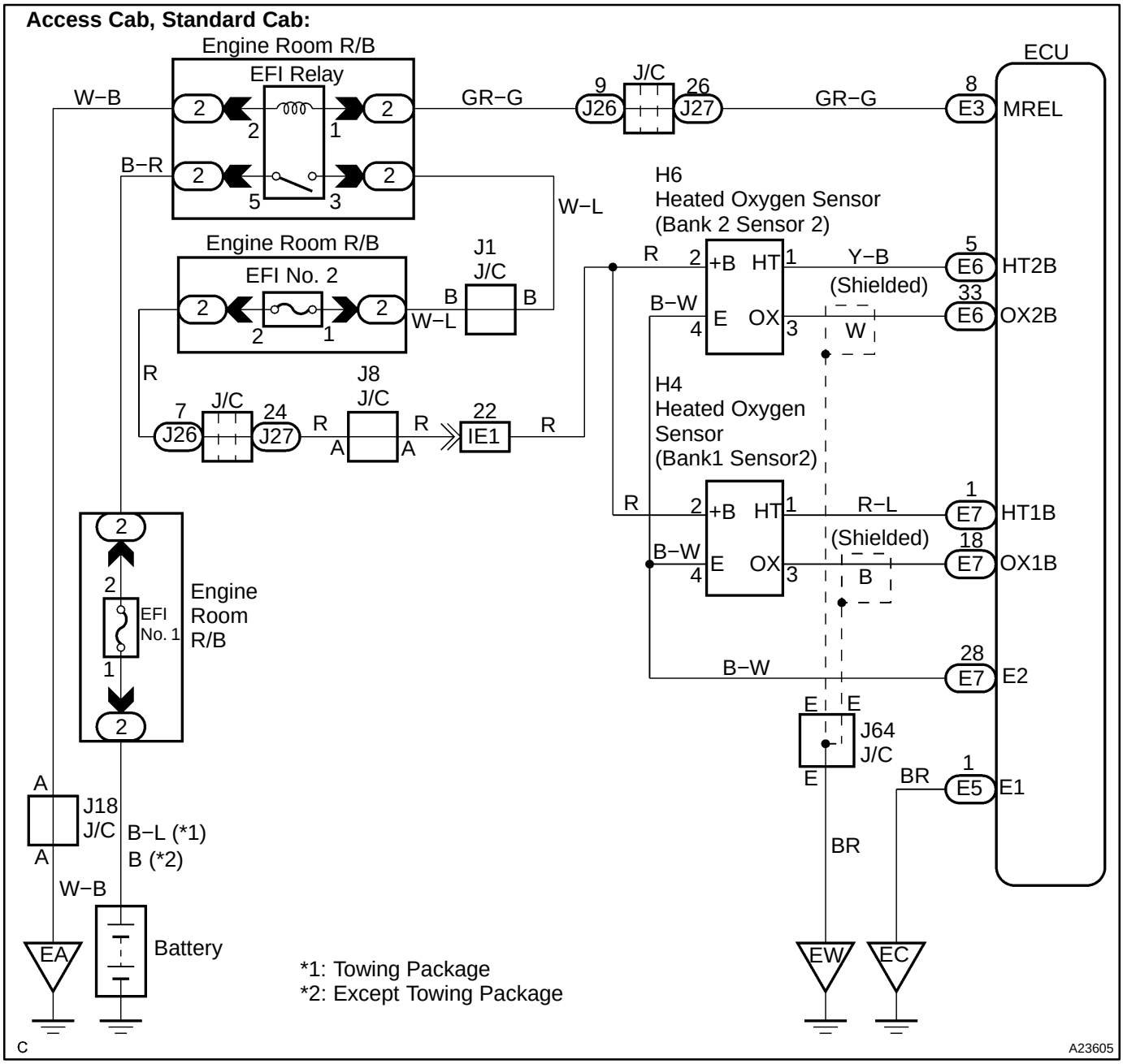

Double Cab:

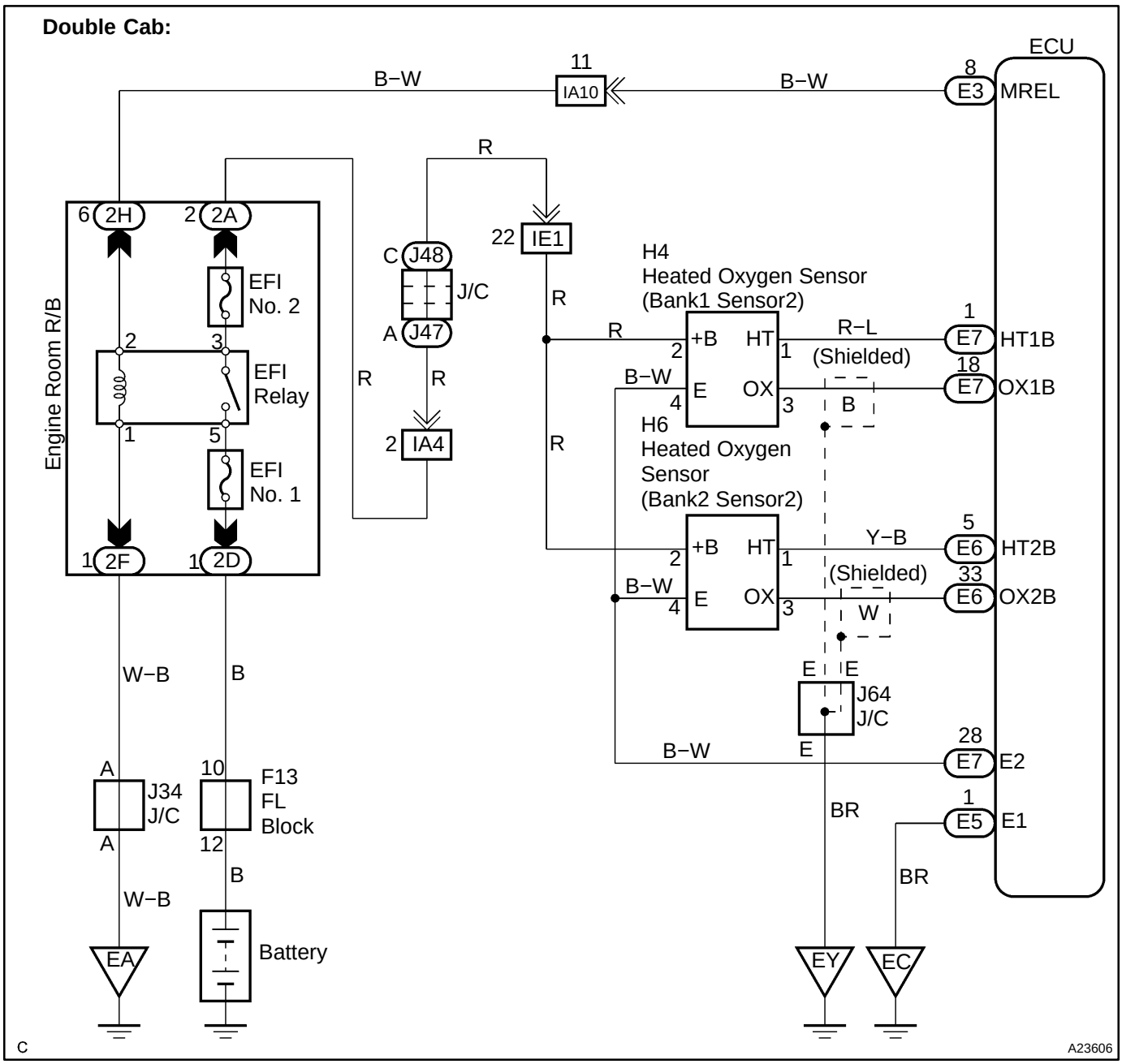
ECU
11
IA10
B−W
B−W
8
E3
MREL
R
22
IE1
C
J48
J/C
A
J47
R
R
2
IA4
6
2H
2
2A
EFI
No. 2
2
3
EFI
Relay
1
5
EFI
No. 1
Engine Room R/B
1
2F
1
2D
H4
Heated Oxygen Sensor
(Bank1 Sensor2)
R
R
2
+B
HT
1
R−L
(Shielded)
1
E7
HT1B
B−W
4
E
OX
3
B
18
E7
OX1B
H6
Heated Oxygen
Sensor
(Bank2 Sensor2)
R
2
+B
HT
1
Y−B
(Shielded)
5
E6
HT2B
B−W
4
E
OX
3
W
33
E6
OX2B
E
E
J64
J/C
B−W
E
28
E7
E2
1
E5
E1
BR
BR
W−B
B
A
J34
J/C
A
10
F13
FL
Block
12
W−B
B
EA
Battery
EY
EC
C
A23606

INSPECTION PROCEDURE

HINT:

Read freeze frame data using hand−held tester. Because freeze frame records the engine conditions when the malfunction is detected. When troubleshooting, it is useful to determine whether the vehicle was running or stopped, the engine was warmed up or not, the air−fuel ratio was lean or rich, etc. when a malfunction occurred.

1	**Check resistance of heated oxygen sensor heater.**

Components Side:

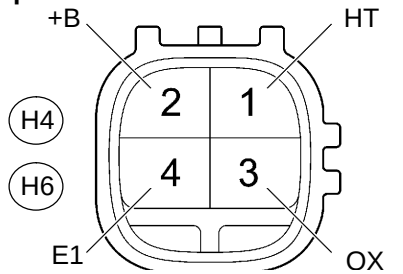

PREPARATION:

Disconnect the H4 or H6 heated oxygen sensor connector.

CHECK:

Measure resistance between terminals of the heated oxygen sensor.

OK:

Standard:

Tester Connection	Specified Condition
HT (H4−1) − +B (H4−2)	11 to 16 Ω (20°C)
HT (H6−1) − +B (H6−2)	11 to 16 Ω (20°C)

NG → **Replace heated oxygen sensor.**

OK

2	**Check EFI relay.**

EFI Relay

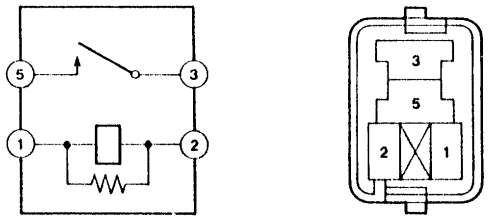

PREPARATION:

Remove the EFI relay from the engine room J/B.

CHECK:

Inspect the EFI relay.

OK:

Standard:

Terminal No.	Condition	Specified Condition
3 − 5	Always	10 KΩ or higher
3 − 5	Apply B+ between terminals 1 and 2	Below 1 Ω

NG → **Replace EFI relay.**

OK

3	**Check voltage between terminals HT1B, HT2B of ECM connectors and body ground.**

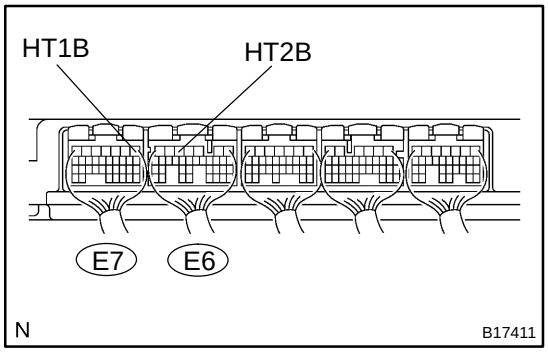

PREPARATION:

Turn the ignition switch ON.

CHECK:

Measure the voltage between terminals of the ECM connectors and body ground.

HINT:

- Connect terminal HT1B to the bank 1 sensor 2.
- Connect terminal HT2B to the bank 2 sensor 2.

OK:

Standard:

Tester Connection	Specified Condition
HT1B (E7−1) − Body ground	9 to 14 V
HT2B (E6−5) − Body ground	9 to 14 V

OK → **Replace ECM (See page SF−82).**

NG

4	**Check for open and short in harness and connector between ECM and heated oxygen sensor, heated oxygen sensor − EFI relay.**

Wire Harness Side:

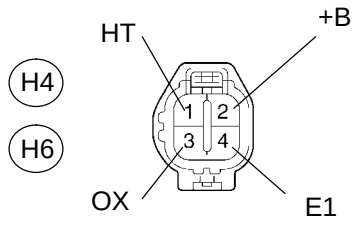

Bank 1 Sensor 2, Bank 2 Sensor 2 A23543

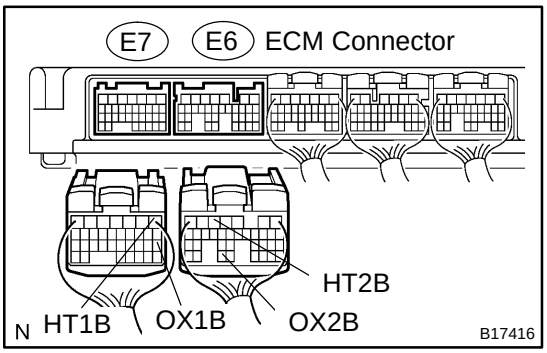

Engine Room R/B:

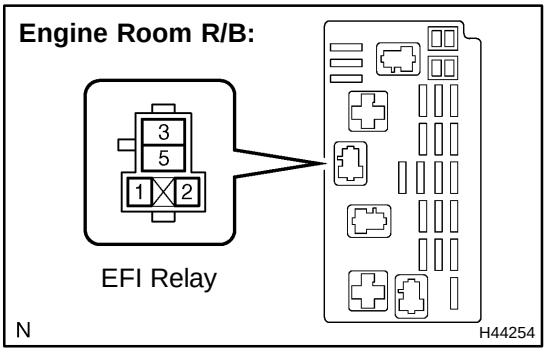

PREPARATION:

(a) Turn the ignition switch to OFF.
(b) Disconnect the H4 or H6 oxygen sensor connector.
(c) Disconnect the E6 and E7 ECM connector.

CHECK:

Check the resistance.

OK:

Standard (Check for open):

Tester Connections	Specified Conditions
HT (H4−1) − HT1B (E7−1)	Below 1 Ω
HT (H6−1) − HT2B (E6−5)	Below 1 Ω

Standard (Check for short):

Tester Connections	Specified Conditions
HT (H4−1) or HT1B (E7−1) − Body ground	10 kΩ or higher
HT (H6−1) or HT2B (E6−5) − Body ground	10 kΩ or higher

PREPARATION:

(a) Turn the ignition switch to OFF.
(b) Disconnect the H4 or H6 oxygen sensor connector.
(c) Remove EFI relay from engine room R/B.

CHECK:

Check the resistance.

OK:

Standard (Check for open):

Tester Connections	Specified Conditions
+B (H4−2) −EFI relay (3) +B (H6−2) − EFI relay (3)	Below 1 Ω

Standard (Check for short):

Tester Connections	Specified Conditions
+B (H4−2) or EFI relay (3) − Body ground +B (H6−2) or EFI relay (3) − Body ground	10 kΩ or higher

NG → **Repair or replace harness or connector.**

OK

Check for intermittent problems (See page DI−430).

DIDRL−01

DTC	P0412	Secondary Air Injection System Air Switching Valve ”A” Circuit

CIRCUIT DESCRIPTION

The secondary air injection system pumps air to the exhaust port to accelerate the activation of the catalyst. The secondary air injection system consists of the ECM, air pump, Air Switching Valve (ASV) (EASV), Air Switching Valve No.2 (ASV No.2) (ASV1, 2), pressure sensor and air injection driver (AID). The Air Switching Valve (ASV)(EASV) is an electromagnetic type and Air Switching Valve No.2 (ASV No.2)(ASV1,2) is a vacuum type.

The secondary air injection system pumps pressurized air to the exhaust port by the air pump through the ASV and ASV No.2. The ASV assists the ASV No.2. The ASV No.2 also controls air supply.

The ECM sends signals to the AID, and then the AID operates the air pump and ASV. The pressure sensor detects pressure and exhaust pulsation in the system when the system operates and when it does not operate, and sends the data to the ECM.

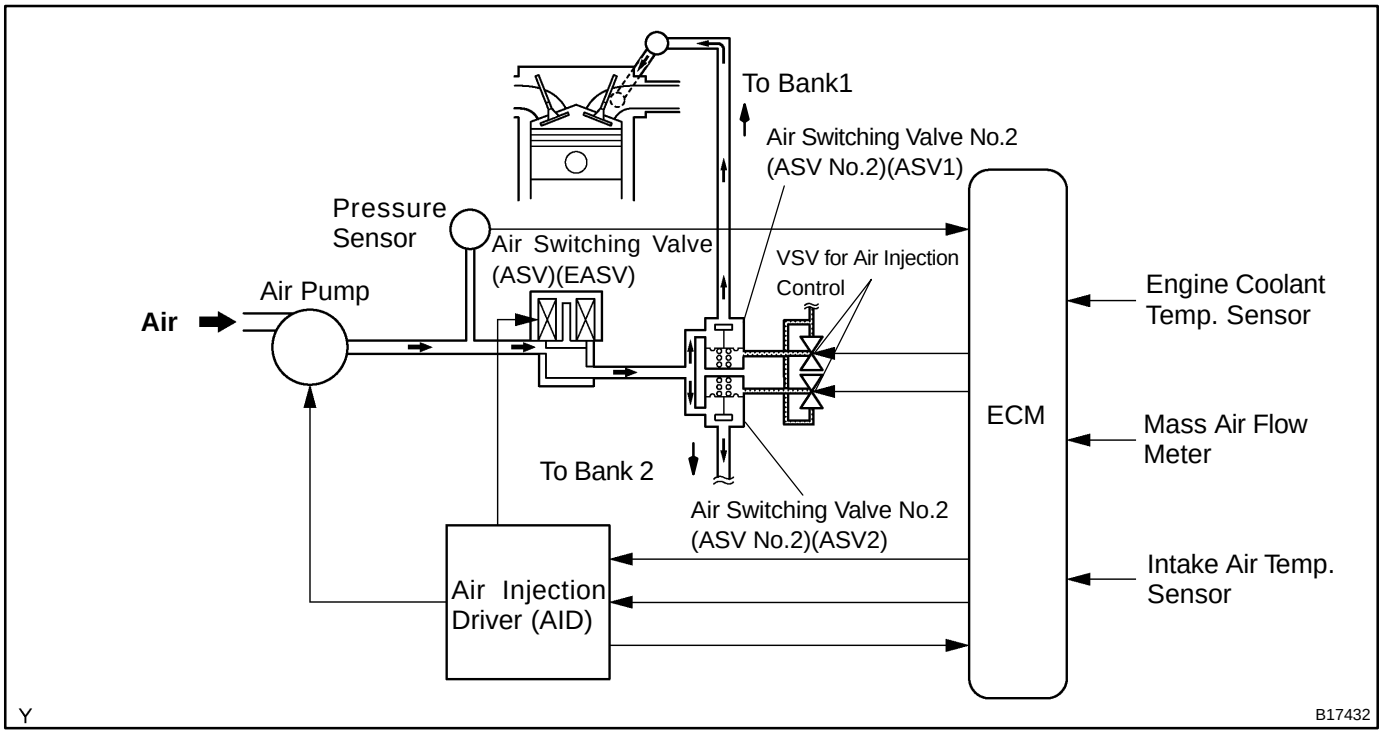

DTC No.	DTC Detection Condition	Trouble Area
P0412	All of the following conditions are met when engine is idling just after cold start (1 trip detection logic): (a) Air injection system does not operate (Air pump OFF and all ASVs OFF) (b) Air injection driver diagnostic signal duty is 40%.	• Open in air switching valve drive circuit • Short between air switching valve circuit and +B circuit • Air injection driver • Air switching valve • ECM
P0412	All of the following conditions are met when engine is idling just after cold start (1 trip detection logic): (a) Air injection system operates (Air pump ON and all ASVs ON) (b) Air injection driver diagnostic signal duty is 40%.	• Short between air switching valve circuit and body ground • Air injection driver • Air switching valve • ECM

MONITOR DESCRIPTION

The air injection driver (AID) detects an open or short in the circuit according to the voltage of the air pump terminal (VP) and electromagnetic air switching valve terminal (VV), and sends a signal as diagnostic information to the ECM.
The AID outputs the air switching valve terminal malfunction signal to the ECM if: 1) VV terminal voltage is low despite the AID receiving the command signal from the ECM to drive the air switching valve terminal or 2) VV terminal voltage is high despite the AID not receiving the command signal from the ECM.
The ECM stores the DTC based on the diagnostic signal from the AID and illuminates the MIL.

MONITOR STRATEGY

Related DTCs	P0412	Air switching valve circuit malfunction (Secondary air injection system)
Required sensors/components	Air injection driver, Air switching valve	
Frequency of operation	Continuous	
Duration	3 sec.	
MIL operation	Immediate	
Sequence of operation	None	

TYPICAL ENABLING CONDITIONS

Item	Specification	
	Minimum	Maximum
The monitor will run whenever this DTC is not present	See page DI−437	
Case 1:		
Air pump	Operating	
Air switching valve	Operating	
Battery voltage	8 V	−
Ignition switch	ON	
Starter	OFF	
Case 2:		
Air pump	Not operating	
Air switching valve	Not operating	
Battery voltage	8 V	−
Ignition switch	ON	
Starter	OFF	

TYPICAL MALFUNCTION THRESHOLDS

Detection Criteria	Threshold
Case 1, 2:	
Diagnostic signal duty ratio from air injection driver	31 to 48 %

COMPONENT OPERATING RANGE

Parameter	Standard Value
Diagnostic signal duty ratio from air injection driver	70 to 90% when secondary air injection system operating and 0% when secondary air injection system not operating

WIRING DIAGRAM

Access Cab, Standard Cab:

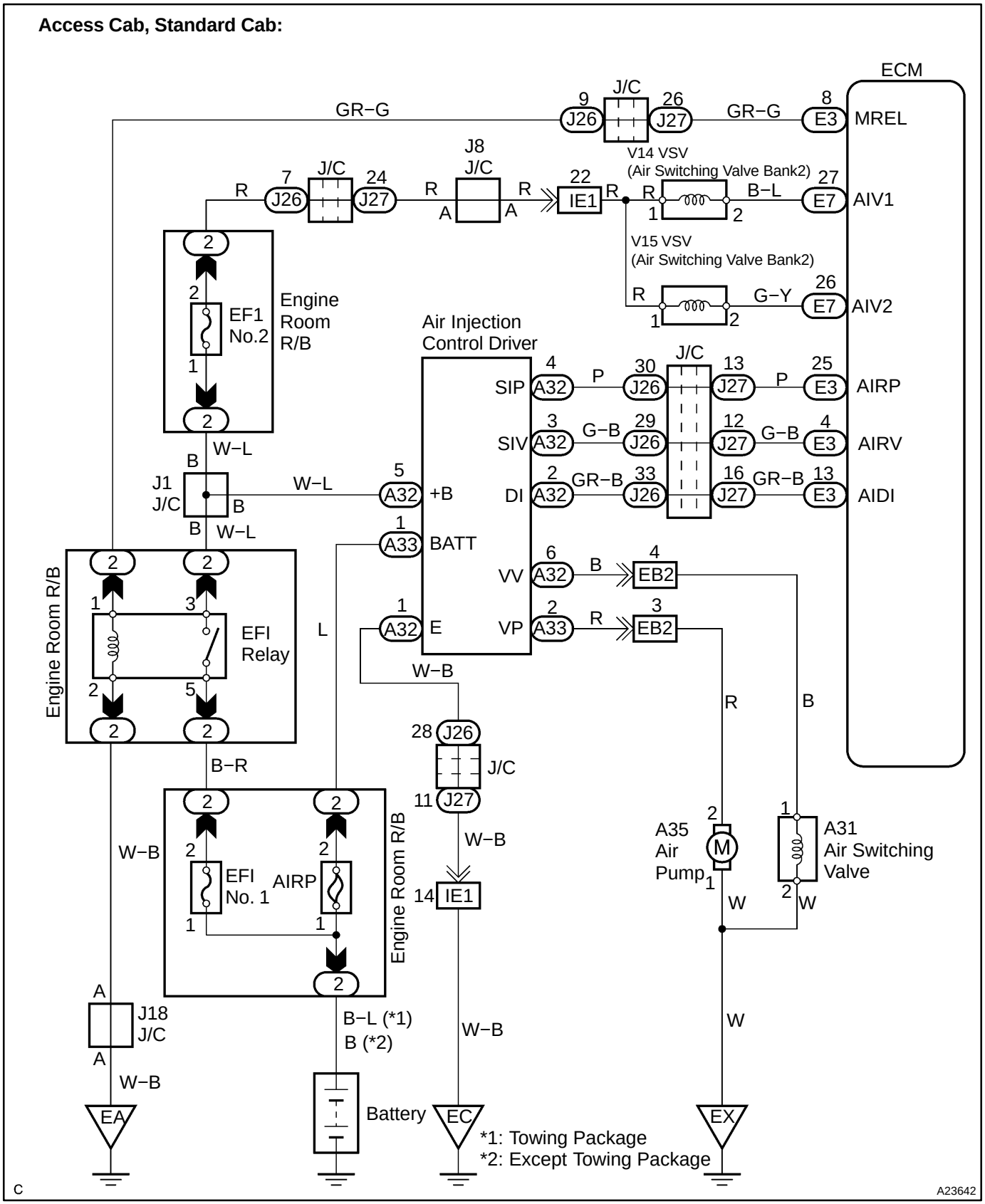

Double Cab:

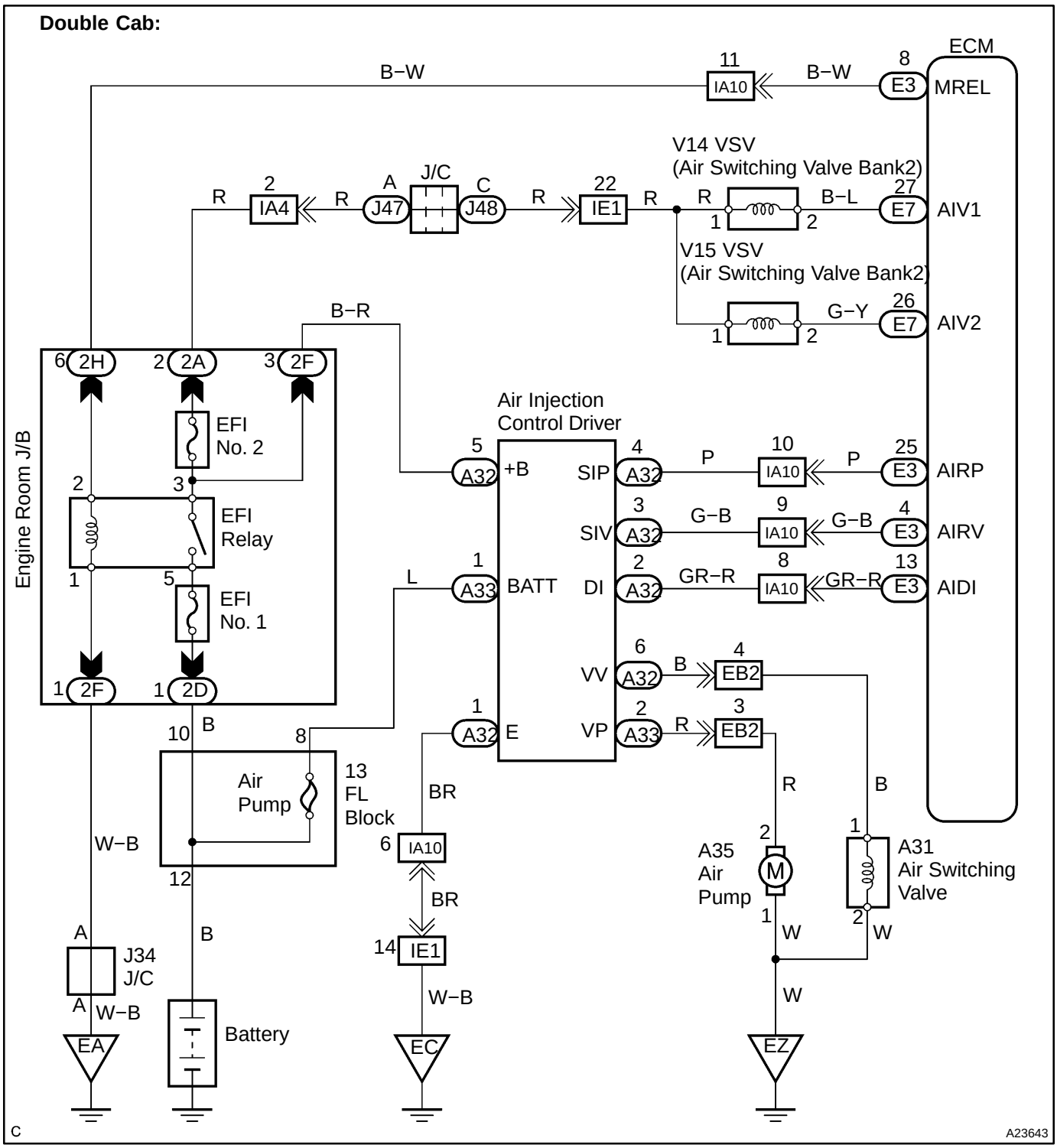
ECM
MREL
AIV1
AIV2
AIRP
AIRV
AIDI
B−W
B−R
R
B−L
G−Y
P
G−B
GR−R
L
BR
W−B
B
W
V14 VSV
(Air Switching Valve Bank2)
V15 VSV
(Air Switching Valve Bank2)
J/C
IA4
J47
J48
IE1
IA10
E3
E7
Engine Room J/B
2H
2A
2F
1F
1D
EFI
No. 2
EFI
Relay
EFI
No. 1
Air Injection
Control Driver
A32
A33
+B
BATT
SIP
SIV
DI
VV
VP
E
EB2
Air
Pump
13
FL
Block
J34
J/C
EA
EC
EZ
Battery
A35
Air
Pump
M
A31
Air Switching
Valve
C
A23643

INSPECTION PROCEDURE

HINT:

The diagnostic information output from AID can be confirmed by connecting an oscilloscope to the diagnostic information terminal of the AID. It narrows a trouble area search to read the waveform on the oscilloscope when performing the AI system intrusive operation function provided in the SYSTEM CHECK.

(1) Start the engine and warm it up.
(2) Turn the ignition switch to OFF.
(3) Connect a hand−held tester to the DLC3.

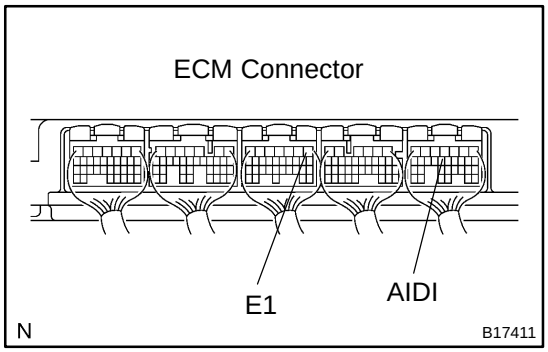

(4) Connect an oscilloscope probe to the AIDI terminal of the ECM.
(5) Start the engine and turn the tester ON.

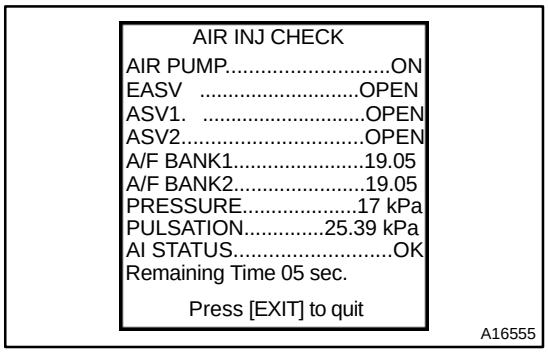

(6) On the tester, select the following menu items: DIAGNOSIS / ENHANCED OBD II / SYSTEM CHECK / AIR INJ CHECK / MANUAL OPERATION / OPERATION 1 and 2.

HINT:

OPERATION 1: AP: OFF, EASV:CLOSE, ASV1:CLOSE, ASV2:CLOSE

OPERATION 2: AP: ON, EASV:OPEN, ASV1:OPEN, ASV2:OPEN

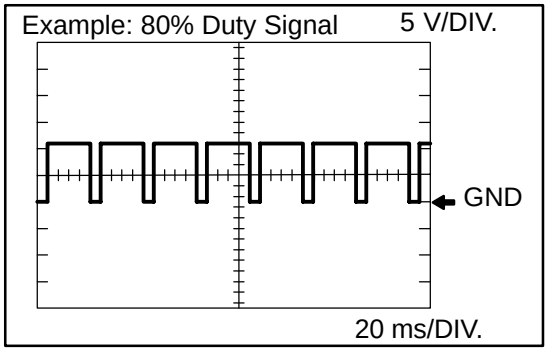

(7) Monitor the voltage output of the AID (duty ratio signal).

Oscilloscope range:

Items	Contents
Terminals	CH1: AIDI − E1
Equipment Settings	5 V/Division, 20 to 40 ms/Division
Conditions	Idling

NOTICE:

- **This AIR INJECTION CHECK only allows technicians to operate the AI system for 5 seconds. Furthermore, the check can be performed 4 times a trip. If the test is repeated, intervals of at least 30 seconds are required between checks.**
  While the AI system operation using the hand−held tester is prohibited, the tester displays the prohibition (WAIT or ERROR). If the ERROR (AI STATUS NG) is displayed on the tester, stop the engine for 10 minutes and then try again.
- **Performing the AIR INJ CHECK over and over again may cause the damage in the secondary air injection system. If necessary, put an interval of several minutes between tests to prevent overheating the system.**

AID Diagnostic Signal Waveforms	ECM Commands	DTCs (ECM Output)	Suspected Trouble Areas
100 % Duty ratio 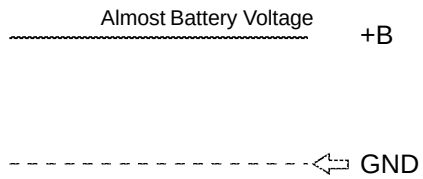	Any Air Injection (AI) System operation	**P1613**	• Open in diagnostic signal circuit • Air Injection Control Driver (AID) • Open in AID+B circuit (AID power source) • Short between +B circuit and diagnostic signal circuit
0 % Duty ratio 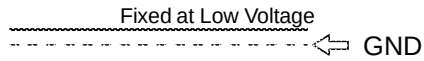	AI System: ON (Air pump ON, ASV ON)	**P1613**	• Open or short in air pump or Air Switching Valve (ASV) command signal circuit (ECM−AID) • Open in AID ground circuit • Short between diagnostic signal circuit and body ground • AID • ECM
	AI System: OFF (Air pump OFF, ASV OFF)	**–**	Normal
20 % Duty ratio 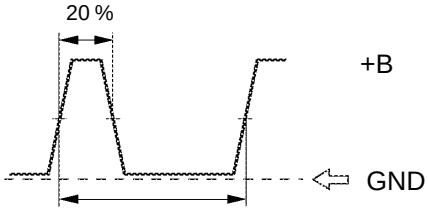	Air Pump: ON	**P0418**	Short between air pump drive circuit and body ground • Harness & connector (AID−Pump) • Air Pump • AID • ECM
	Air Pump: OFF	**P0418**	Open in air pump drive circuit (AID−Pump) , or short between air pump drive circuit and +B • Harness & connector (AID−Pump) • Air Pump • AID • ECM
40 % Duty ratio 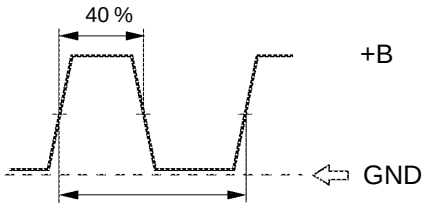	ASV: ON	**P0412**	Short between ASV drive circuit and body ground • Harness & connector (AID−ASV) • ASV • AID • ECM
	ASV: OFF	**P0412**	Open in ASV drive circuit (AID−ASV), or short between ASV drive circuit and +B • Harness & connector (AID−ASV) • AID • ASV • ECM
80 % Duty ratio 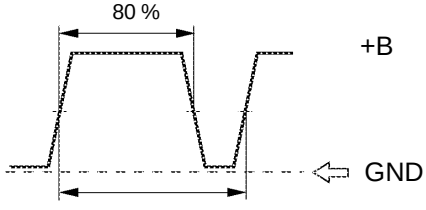	AI System: OFF (Air pump OFF, ASV OFF)	**P1613**	• AID • ECM
	AI System: ON (Air pump ON, ASV ON)	—	Normal
Excluding above (excluding 0, 20, 40, 80, 100 % duty)	—	**P1613**	• AID • Open in AID ground circuit

A23464

HINT:

- Using the AIR INJ CHECK operation of the SYSTEM CHECK provided in the hand−held tester function, conditions for air−fuel ratio and pressure in the secondary air injection system passage can be checked while the secondary air injection system operating. It helps technicians to troubleshoot the system when it malfunctioning.
- Read freeze frame data using a hand−held tester. Freeze frame data record the engine condition when malfunctions are detected. When troubleshooting, freeze frame data can help determine if the vehicle was moving or stationary, if the engine was warmed up or not, if the air−fuel ratio was lean or rich, and other data, from the time the malfunction occurred.

1	**Check voltage between terminal 1 of air switching valve connector and body ground.**

Wire Harness Side:

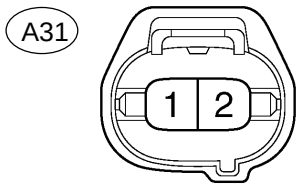

Air Switching Valve Connector

N B17440

PREPARATION:

(a) Remove the intake manifold (see page EM−36).
(b) Disconnect the A31 air switching valve connector.
(c) Connect the hand−held tester to the DLC3.
(d) Turn the ignition switch ON and turn the tester ON.

CHECK:

(a) When the air switching valve is operated using the hand−held tester, measure voltage between terminal A31−1 of the air switching valve connector and body ground.
(b) Select the following menu items: DIAGNOSIS/ENHANCED OBD II/SYSTEM CHECK/ AIR INJ CHECK/ MANUAL OPERATION/OPERATION 1 and 4

HINT:

OPERATION 1: AP:OFF, EASV:CLOSE, ASV1:CLOSE, ASV2:CLOSE

OPERATION 4: AP:OFF, EASV:OPEN, ASV1:CLOSE, ASV2:CLOSE

NOTICE:

This test only allows technicians to operate the AI system for 5 seconds. Furthermore, the test can be performed 4 times a trip. If the test is repeated, intervals of at least 30 seconds are required between tests.

While the AI system operation using the hand−held tester is prohibited, the tester displays the prohibition (WAIT or ERROR). If the ERROR (AI STATUS NG) is displayed on the tester, stop the engine for 10 minutes and then try again..

OK:

Standard:

Tester operation	Tester Connection	Specified Condition
Operation 4	A31−1 − Body ground	10 V or more
Operation 1	A31−1 − Body ground	Below 1.0 V

NG	**Go to step 4.**

OK

2	Check air switching valve.

Component Side:

ASV Connector

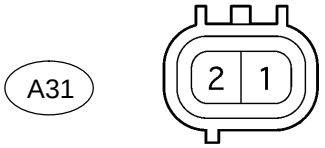

Front View

A23465

PREPARATION:

(a) Remove the intake manifold (see page EM−36).

(b) Disconnect the ASV connector.

CHECK:

Measure the resistance of the ASV.

OK:

Standard:

Tester Connections	Specified Conditions
ASV (B13−1) − ASV (B13−2)	4.5 to 5.5 Ω

NG → **Replace air switching valve.**

OK

3	Check for open in harness and connector between air switching valve and body ground.

Wire Harness Side:

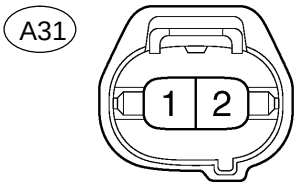

Air Switching Valve Connector

N

B17440

PREPARATION:

(a) Remove the intake manifold (see page EM−36).

(b) Disconnect the A31 air switching valve connector.

CHECK:

Check the resistance between the wire harness side connectors and body ground.

OK:

Standard:

Tester Connection	Specified Condition
A31−2 − Body ground	Below 1 Ω

NG → **Repair or replace harness or connector.**

OK

Check for intermittent problems (See page DI−430).

4	**Check for open and short in harness and connector between air injection driver and air switching valve.**

Wire Harness Side:

Air Injection Driver Connector

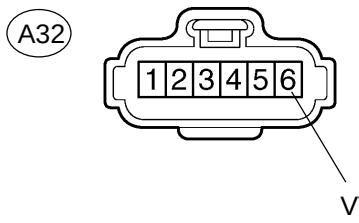

N B17444

Wire Harness Side:

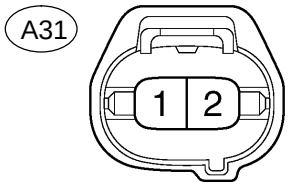

Air Switching Valve Connector

N B17440

PREPARATION:

(a) Remove the intake manifold (see page EM−36).
(b) Disconnect the A32 air injection driver connector.
(c) Disconnect the A31 air switching valve connector.

CHECK:

Check the resistance between the wire harness side connectors.

OK:

Standard:

Tester Connection	Specified Condition
VV (A32−6) − A31−1	Below 1 Ω
VV (A32−6) or A31−1 − Body ground	10 kΩ or higher

NG → **Repair or replace harness or connector.**

OK

Replace air injection driver.

DIDRM−01

DTC	P0418	Air Injection System Air Pump Malfunction

CIRCUIT DESCRIPTION

Refer to DTC P0412 on page DI−656.

DTC No.	DTC Detection Condition	Trouble Area
P0418	All of the following conditions are met, when idling just after cold start. (1 trip detection logic): (a) Air injection system not operate (b) Air injection driver outputs air pump malfunction signal (20% duty signal)	• Open in air pump drive circuit • Short between air pump circuit and +B circuit • Air injection driver • ECM
P0418	All of the following conditions are met, when idling just after cold start. (1 trip detection logic): (a) Air injection system operates (b) Air injection driver outputs air pump malfunction signal (20% duty signal)	• Short between air pump circuit and body ground • Air injection driver • ECM

MONITOR DESCRIPTION

Air Injection Driver (AID) detects an open or short in the air pump and Air Switching Valve (ASV) circuit according to the terminal voltage and sends a signal as diagnostic information to the ECM.
When the air injection system operation is required while the engine is warming up, the ECM transmits command signals to the AID to drive the air pump and ASV.
The AID inputs the command signal from ECM if: 1) VP terminal voltage is low despite the AID inputting the command signal from the ECM to drive the ASV or 2) VP terminal voltage is high despite the AID not inputting the command signal from the ECM.
The ECM sets the DTC based on the diagnostic information from the AID.

MONITOR STRATEGY

Related DTCs	P0418	Air pump range check
Required sensors/components	Air injection driver, Air pump	
Frequency of operation	Continuous	
Duration	3 sec.	
MIL operation	Immediate	
Sequence of operation	None	

TYPICAL ENABLING CONDITIONS

Item	Specification	
	Minimum	Maximum
The monitor will run whenever this DTC is not present	See page DI−437	
Case 1:		
Air pump	Operating	
Air switching valve	Operating	
Battery voltage	8 V	−
Ignition switch	ON	
Starter	OFF	
Case 2:		
Air pump	Not operating	
Air switching valve	Not operating	
Battery voltage	8 V	−
Ignition switch	ON	
Starter	OFF	

TYPICAL MALFUNCTION THRESHOLDS

Detection Criteria	Threshold
Case 1, 2:	
Diagnostic signal duty ratio from air injection driver	11 to 29 %

COMPONENT OPERATING RANGE

Parameter	Standard Value
Diagnostic signal duty ratio from air injection driver	70 to 90% when secondary air injection system operating and 0% when secondary air injection system not operating

WIRING DIAGRAM

Refer to DTC P0412 on page DI−656.

INSPECTION PROCEDURE

HINT:

The diagnostic information output from the AID can be confirmed by connecting an oscilloscope to the diagnostic information terminal of the AID. It narrows the trouble area search to read the waveform on the oscilloscope when performing the AI system intrusive operation function provided in the SYSTEM CHECK.

(1) Start the engine and warm it up.
(2) Turn the ignition switch to OFF.
(3) Connect a hand−held tester to the DLC3.

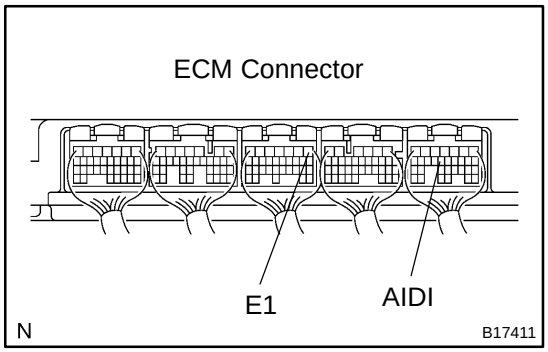

(4) Connect an oscilloscope probe to the AIDI terminal of the ECM.
(5) Start the engine and turn the tester ON.
(6) On the tester, select the following menu items: DIAGNOSIS / ENHANCED OBD II / SYSTEM CHECK / AIR INJ SYSTEM.

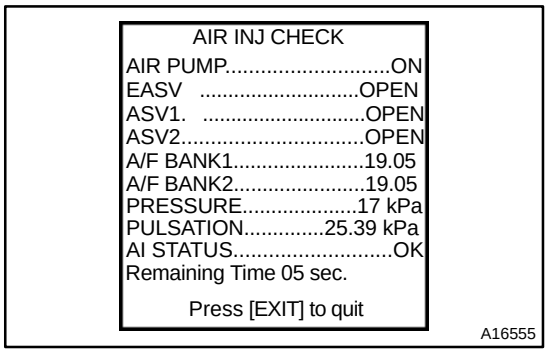

(7) On the tester, select the following menu items: DIAGNOSIS / ENHANCED OBD II / SYSTEM CHECK / AIR INJ CHECK / MANUAL OPERATION / OPERATION 1 and 2.

HINT:

OPERATION 1: AP: OFF, EASV:CLOSE, ASV1:CLOSE, ASV2:CLOSE

OPERATION 2: AP: ON, EASV:OPEN, ASV1:OPEN, ASV2:OPEN

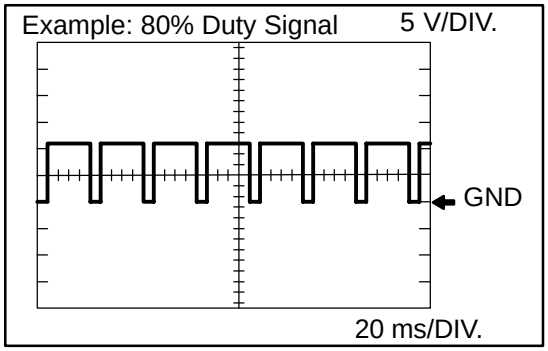

(8) Monitor the voltage output of the AID (duty ratio signal).

Oscilloscope range:

Items	Contents
Terminals	CH1: AIDI − E1
Equipment Settings	5 V/Division, 20 to 40 ms/Division
Conditions	Idling

NOTICE:

- **This AIR INJECTION CHECK only allows technicians to operate the AI system for 5 seconds. Furthermore, the check can be performed 4 times a trip. If the test is repeated, intervals of at least 30 seconds are required between checks.**
  While the AI system operation using the hand−held tester is prohibited, the tester displays the prohibition (AI STATUS NG) or ERROR. At this time stop the engine for 10 minutes and then try again.
- **Performing the AIR INJ CHECK over and over again may cause the damage in the secondary air injection system. If necessary, put an interval of several minutes between tests to prevent overheating the system.**

AID Diagnostic Signal Waveforms	ECM Commands	DTCs (ECM Output)	Suspected Trouble Areas
100 % Duty ratio 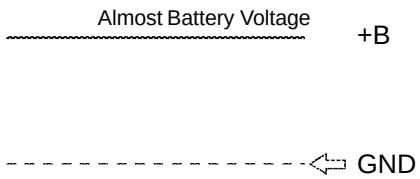	Any Air Injection (AI) System operation	**P1613**	• Open in diagnostic signal circuit • Air Injection Control Driver (AID) • Open in AID+B circuit (AID power source) • Short between +B circuit and diagnostic signal circuit
0 % Duty ratio 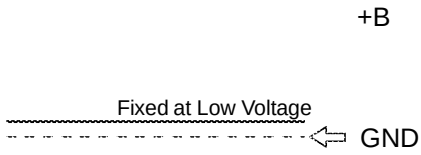	AI System: ON (Air pump ON, ASV ON)	**P1613**	• Open or short in air pump or Air Switching Valve (ASV) command signal circuit (ECM−AID) • Open in AID ground circuit • Short between diagnostic signal circuit and body ground • AID • ECM
	AI System: OFF (Air pump OFF, ASV OFF)	**–**	Normal
20 % Duty ratio 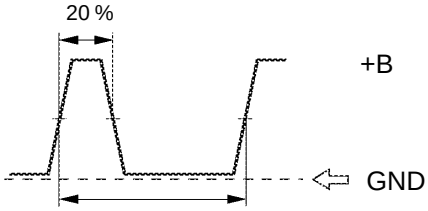	Air Pump: ON	**P0418**	Short between air pump drive circuit and body ground • Harness & connector (AID−Pump) • Air Pump • AID • ECM
	Air Pump: OFF	**P0418**	Open in air pump drive circuit (AID−Pump) , or short between air pump drive circuit and +B • Harness & connector (AID−Pump) • Air Pump • AID • ECM
40 % Duty ratio 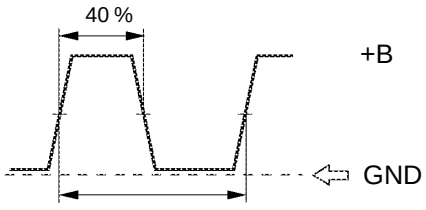	ASV: ON	**P0412**	Short between ASV drive circuit and body ground • Harness & connector (AID−ASV) • ASV • AID • ECM
	ASV: OFF	**P0412**	Open in ASV drive circuit (AID−ASV), or short between ASV drive circuit and +B • Harness & connector (AID−ASV) • AID • ASV • ECM
80 % Duty ratio 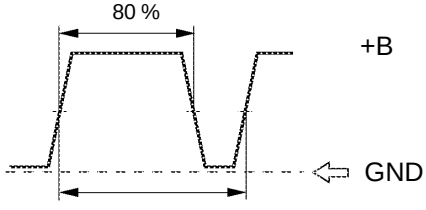	AI System: OFF (Air pump OFF, ASV OFF)	**P1613**	• AID • ECM
	AI System: ON (Air pump ON, ASV ON)	—	Normal
Excluding above (excluding 0, 20, 40, 80, 100 % duty)	—	**P1613**	• AID • Open in AID ground circuit

A23464

HINT:

- Using the AIR INJ CHECK operation of the SYSTEM CHECK provided in the hand−held tester function, conditions for air−fuel ratio and pressure in the secondary air injection system passage can be checked while the secondary air injection system operating. It helps technicians to troubleshoot the system when it malfunctioning.
- Read freeze frame data using a hand−held tester. Freeze frame data record the engine condition when malfunctions are detected. When troubleshooting, freeze frame data can help determine if the vehicle was moving or stationary, if the engine was warmed up or not, if the air−fuel ratio was lean or rich, and other data, from the time the malfunction occurred.

1	**Check voltage between terminal 2 of air pump and body ground.**

Wire Harness Side:

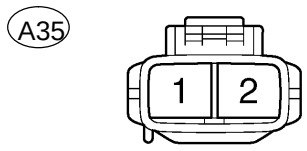

Air Pump Connector

N B17438

PREPARATION:

(a) Remove the intake manifold (see page EM−36).
(b) Disconnect the A35 air pump connector.
(c) Connect the hand−held tester to the DLC3.
(d) Turn the ignition switch ON and turn the tester ON.

CHECK:

(a) When the air pump is operated using the hand−held tester, measure voltage between terminal A35−2 of the air injection driver connector and body ground.
(b) Select the following menu items: DIAGNOSIS/ENHANCED OBD II/SYSTEM CHECK/ AIR INJ CHECK/ MANUAL OPERATION/OPERATION 1 and 3

HINT:

OPERATION 1: AP:OFF, EASV:CLOSE, ASV1:CLOSE, ASV2:CLOSE

OPERATION 3: AP:ON, EASV:OPEN, ASV1:OPEN, ASV2:OPEN

NOTICE:

This test only allows technicians to operate the AI system for 5 seconds. Furthermore, the test can be performed 4 times a trip. If the test is repeated, intervals of at least 30 seconds are required between tests.

While the AI system operation using the hand−held tester is prohibited, the tester displays the prohibition (WAIT or ERROR). If the ERROR (AI STATUS NG) is displayed on the tester, stop the engine for 10 minutes and then try again..

OK:

Standard:

Tester operation	Tester Connection	Specified Condition
Operation 3	A35−2 − Body ground	10 V or more
Operation 1	A35−2 − Body ground	Below 1.0 V

NG	**Go to step 4.**

OK

2	Check air pump resistance.

Component Side:
Air Pump Connector

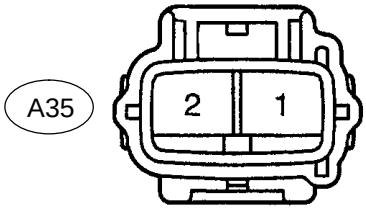

Front View
A23498

PREPARATION:
(a) Remove the intake manifold (see page EM−36).
(b) Disconnect the air pump connector.

CHECK:
Measure the resistance of the air pump.

OK:

Standard:

Tester Connections	Specified Conditions
A35−1 − A35−2	0.4 to 1.0 Ω

NG → **Replace air pump assembly.**

OK

3	Check for open in harness and connector between air pump and body ground.

Wire Harness Side:

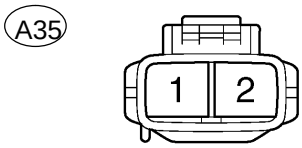

Air Pump Connector
N
B17438

PREPARATION:
(a) Remove the intake manifold (see page EM−36).
(b) Disconnect the A35 air pump connector.

CHECK:
Check the resistance between the wire harness side connectors and body ground.

OK:

Standard:

Tester Connection	Specified Condition
A35−1 − Body ground	Below 1 Ω

NG → **Repair or replace harness or connector.**

OK

Check for intermittent problems (See page DI−430).

4	**Check for open and short in harness and connector between air injection driver and air pump.**

Wire Harness Side:
Air Injection Driver Connector

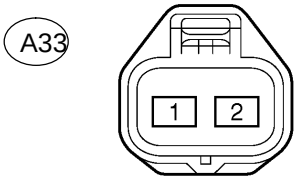

N B17443

Wire Harness Side:

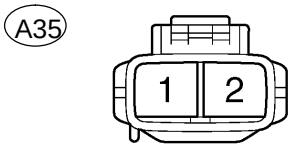

Air Pump Connector

N B17438

PREPARATION:
(a) Remove the intake manifold (see page EM−36).
(b) Disconnect the A33 air injection driver connector.
(c) Disconnect the A35 air pump connector.

CHECK:
Check the resistance between the wire harness side connectors.

OK:

Standard:

Tester Connection	Specified Condition
VP (A33−2) − A35−2	Below 1 Ω
VP (A33−2) or A35−2 − Body ground	10 kΩ or higher

NG → **Repair or replace harness or connector.**

OK

Replace air injection driver.

DIDRN−01

DTC	P0420	Catalyst System Efficiency Below Threshold (Bank 1)

DTC	P0430	Catalyst System Efficiency Below Threshold (Bank 2)

MONITOR DESCRIPTION

The ECM uses the two sensors, mounted in front of and behind the Three−way Catalytic Converter (TWC), to monitor its efficiency.

The first sensor, the Air−Fuel Ratio (A/F) sensor (sensor 1), sends pre−catalyst information to the ECM. The second sensor, the Heated Oxygen (HO2) sensor (sensor 2), sends post−catalyst information to the ECM. The ECM compares the information transmitted by these two sensors to determine the efficiency of the TWC performance and its ability to store oxygen.

When the TWC is functioning properly, the variation in the oxygen concentration in the exhaust gas, after it has passed through the TWC, is small. In this condition, the voltage output of sensor 2 slowly alternates between the rich and lean signal voltages (shown in the illustration below). As the TWC performance efficiency deteriorates, its oxygen storage capacity decreases, and the variation in the oxygen concentration in the exhaust gas increases. As a result, the sensor voltage output fluctuates frequently.

While the catalyst monitor is running, the ECM measures the signal lengths of both sensors 1 and 2, and calculates the ratio of the signal lengths to determine the extent of the TWC deterioration. If the deterioration level exceeds the preset threshold, the ECM interprets this as the TWC malfunction. The ECM then illuminates the MIL and sets the DTC.

DTC No.	DTC Detecting Condition	Trouble Area
P0420 P0430	OSC value smaller than standard value under active air−fuel ratio control (2 trip detection logic)	• Gas leakage on exhaust system • A/F sensor (Bank 1, 2 sensor 1) • Heated oxygen sensor (bank 1, 2 sensor 2) • Three−way catalytic converter

HINT:

- Bank 1 refers to the bank that includes cylinder No.1.
- Bank 2 refers to the bank that does not include cylinder No.1.
- Sensor 1 refers to the sensor mounted in front of the Three−Way Catalytic Converter (TWC) and located near the engine assembly.
- Sensor 2 refers to the sensor mounted behind the TWC and located far from the engine assembly.

MONITOR STRATEGY

Related DTCs	P0420	Bank 1 catalyst is deteriorated
	P0430	Bank 2 catalyst is deteriorated
Required sensors/components	Main sensors/components	Front and rear heated oxygen sensor
	Related sensors/components	Mass air flow meter, Engine coolant temperature sensor, Engine speed sensor, Intake air temperature sensor
Frequency of operation	Once per driving cycle	
Duration	30 sec.	
MIL operation	2 driving cycles	
Sequence of operation	None	

TYPICAL ENABLING CONDITIONS

Item	Specification	
	Minimum	Maximum
The monitor will run whenever these DTCs are not present	See page DI−437	
Battery voltage	11 V	−
Intake air temperature	−10°C (14°F)	−
Engine coolant temperature	75°C (167°F)	−
Atmospheric pressure coefficient	0.75	−
Idle	OFF	
Engine RPM	−	3,200 rpm
A/F sensor	Activated	
Fuel system status	Closed loop	
Engine load	10 to 70 %	
All of the following conditions are met	Condition 1, 2 and 3	
1. MAF	6 to 75 g/sec	
2. Front catalyst temperature (estimated)	620 to 830°C (1,148 to 1,526°F)	
3. Rear catalyst temperature (estimated)	410 to 830°C (770 to 1,526°F)	
Rear HO2S monitor	Completed	
Shift position	4th	−

TYPICAL MALFUNCTION THRESHOLDS

Detection Criteria	Threshold
Oxygen storage capacity (OSC) of catalyst	Less than 0.16 g

MONITOR RESULT

Refer to page DI−445 for detailed information.

The test value and test limit information are described as shown in the following table. Check the monitor result and test values after performing the monitor drive pattern (refer to ”Confirmation Monitor”).

- MID (Monitor Identification Data) is assigned to each emissions−related component.
- TID (Test Identification Data) is assigned to each test value.
- Scaling is used to calculate the test value indicated on generic OBD ll scan tools.

Catalyst bank 1 − Active A/F control method

MID	TID	Scaling	Description of Test Value	Minimum Test Limit	Maximum Test Limit
$21	$A9	Multiply by 0.0003 (no dimension)	Oxygen storage capacity of catalyst	Minimum test limit for catalyst	Maximum test limit for catalyst

Catalyst bank 2 − Active A/F control method

MID	TID	Scaling	Description of Test Value	Minimum Test Limit	Maximum Test Limit
$22	$A9	Multiply by 0.0003 (no dimension)	Oxygen storage capacity of catalyst	Minimum test limit for catalyst	Maximum test limit for catalyst

WAVEFORMS OF AIR−FUEL RATIO (A/F) AND HEATED OXYGEN (HO2) SENSORS

HINT:

Perform the operation with the engine speeds and time durations described below prior to check the waveforms of the A/F and HO2 sensors. This is in order to activate the sensors sufficiently to obtain the appropriate inspection results.

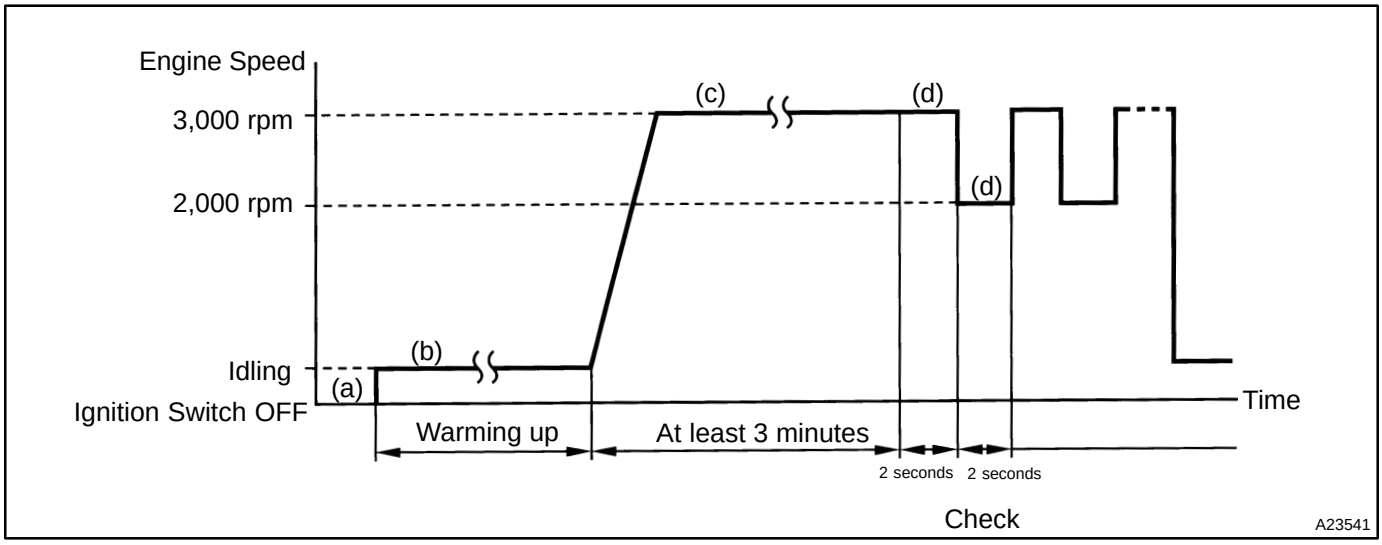

(a) Connect the hand−held tester to the DLC3.

(b) Start the engine and warm it up with all the accessories switched OFF, until the engine coolant temperature stabilizes.

(c) Run the engine at an engine speed of between 2,500 rpm and 3,000 rpm for at least 3 minutes.

(d) After confirming that the waveform of the heated oxygen sensor (bank 1, 2 sensor 1 (OX1A, OX2A)), oscillate around 0.5 V during feedback to the ECM, check the waveform of the heated oxygen sensor (bank 1, 2 sensor 2 (OX1B, OX2B)).

HINT:

- If either of the voltage outputs of the Air−Fuel Ratio (A/F) or Heated Oxygen (HO2) sensors does not fluctuate, or either of the sensors makes a noise, the sensor may be malfunctioning.
- If the voltage outputs of both the sensors remain lean or rich, the air−fuel ratio may be extremely lean or rich. In such cases, perform the following A/F CONTROL using a hand−held tester.
- If the Three−Way Catalytic Converter (TWC) has deteriorated, the HO2 sensor (located behind the TWC) voltage output fluctuates up and down frequently, even under normal driving conditions (active air−fuel ratio control is not performed).

Voltage output when active air−fuel ratio control not performed

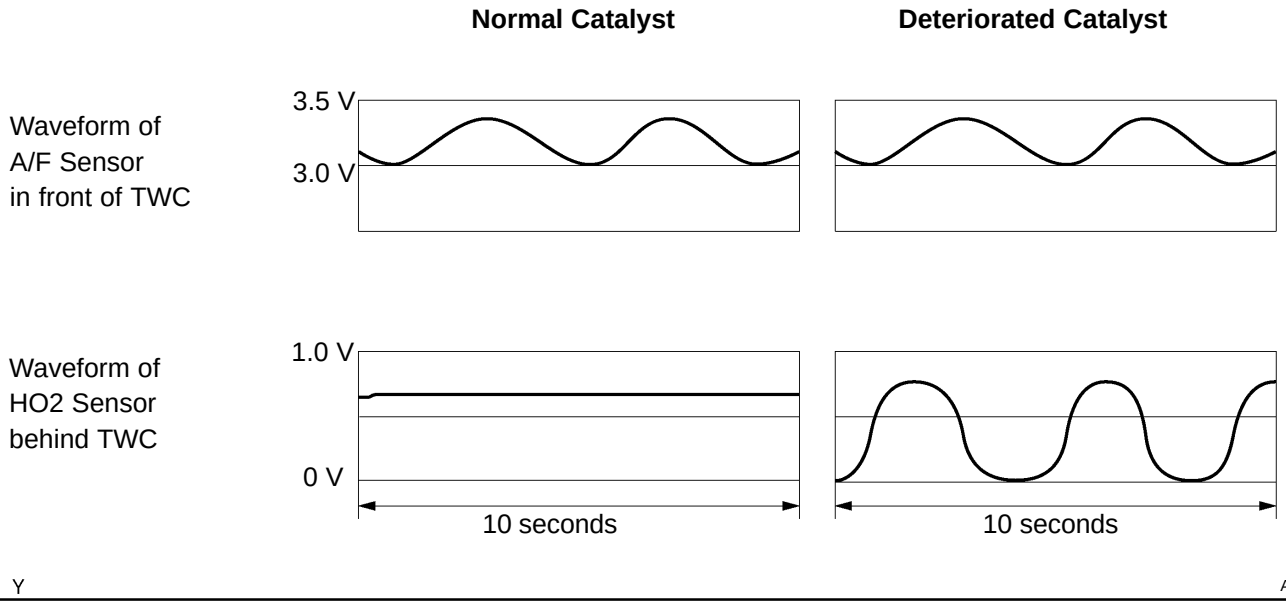

A/F CONTROL

HINT:

Hand−held tester only:

Malfunctioning areas can be identified by performing the A/F CONTROL function provided in the ACTIVE TEST. The A/F CONTROL function can help to determine whether the Air−Fuel Ratio (A/F) sensor, Heated Oxygen (HO2) sensor and other potential trouble areas are malfunctioning.

The following instructions describe how to conduct the A/F CONTROL operation using a hand−held tester.

(1) Connect a hand−held tester to the DLC3.
(2) Start the engine and turn the tester ON.
(3) Warm up the engine at an engine speed of 2,500 rpm for approximately 90 seconds.
(4) On the tester, select the following menu items: DIAGNOSIS / ENHANCED OBD II / ACTIVE TEST / A/F CONTROL.
(5) Perform the A/F CONTROL operation with the engine in an idling condition (press the RIGHT or LEFT button to change the fuel injection volume).
(6) Monitor the voltage outputs of the A/F and HO2 sensors (AFS B1S1 and OS2 B1S2) displayed on the tester.

HINT:

- The A/F CONTROL operation lowers the fuel injection volume by 12.5 % or increases the injection volume by 25 %.
- Each sensor reacts in accordance with increases and decreases in the fuel injection volume.

Standard:

Tester Display (Sensor)	Injection Volumes	Status	Voltages
AFS B1S1 (A/F)	+25 %	Rich	Less than 3.0
AFS B1S1 (A/F)	−12.5 %	Lean	More than 3.35
O2S B1S2 (HO2)	+25 %	Rich	More than 0.55
O2S B1S2 (HO2)	−12.5 %	Lean	Less than 0.4

NOTICE:

The Air−Fuel Ratio (A/F) sensor has an output delay of a few seconds and the Heated Oxygen (HO2) sensor has a maximum output delay of approximately 20 seconds.

Case	A/F Sensor (Sensor 1) Output Voltage	HO2 Sensor (Sensor 2) Output Voltage	Main Suspected Trouble Areas
1	Injection volume +25 % −12.5 % Output voltage More than 3.35 V Less than 3.0 V **OK**	Injection volume +25 % −12.5 % Output voltage More than 0.55 V Less than 0.4V **OK**	—
2	Injection volume +25 % −12.5 % Output voltage Almost no reaction **NG**	Injection volume +25 % −12.5 % Output voltage More than 0.55 V Less than 0.4V **OK**	● A/F sensor ● A/F sensor heater ● A/F sensor circuit
3	Injection volume +25 % −12.5 % Output voltage More than 3.35 V Less than 3.0V **OK**	Injection volume +25 % −12.5 % Output voltage Almost no reaction **NG**	● HO2 sensor ● HO2 sensor heater ● HO2 sensor circuit
4	Injection volume +25 % −12.5 % Output voltage Almost no reaction **NG**	Injection volume +25 % −12.5 % Output voltage Almost no reaction **NG**	● Injector ● Fuel pressure ● Gas leakage from exhaust system (Air−fuel ratio extremely lean or rich)

- Following the A/F CONTROL procedure enables technicians to check and graph the voltage outputs of both the A/F and HO2 sensors.
- To display the graph, select the following menu items on the tester: DIAGNOSIS / ENHANCED OBD II / ACTIVE TEST / A/F CONTROL / USER DATA / AFS B1S1 and O2S B1S2, and press the YES button and then the ENTER button followed by the F4 button.

INSPECTION PROCEDURE

HINT:

Read freeze frame data using the hand−held tester. Freeze frame data records the engine conditions when a malfunction is detected. When troubleshooting, freeze frame data can help determine if the vehicle was running or stopped, if the engine was warmed up or not, if the air−fuel ratio was lean or rich, as well as other data from the time when a malfunction occurred.

1	**Are there any other codes (besides DTC P0420 or P0430) being output?**

PREPARATION:

(a) Connect the hand−held tester to the DLC3.
(b) Turn the ignition switch ON and push the hand−held tester main switch ON.
(c) When using hand−held tester, enter the following menu: DIAGNOSIS / ENHANCED OBD II / DTC INFO / CURRENT CODES.

CHECK:

Read the DTC using the hand−held tester.

RESULT:

Display (DTC Output)	Proceed to
”P0420 and/or P0430”	A
”P0420 or P0430” and other DTCs	B

HINT:

If any other codes besides ”P0420 and/or P0430” are output, perform the troubleshooting for those DTCs first.

B → **Go to relevant DTC chart (See page DI−477).**

A

2	**Check A/F sensor (bank 1, 2 sensor 1).**

(a) Connect the hand−held tester to the DLC3.
(b) Start the engine and turn the tester ON.
(c) Warm up the engine with the engine speed at 2,500 rpm for approximately 90 seconds.
(d) On the tester, select the following menu items: DIAGNOSIS / ENHANCED OBD II / ACTIVE TEST / A/F CONTROL.
(e) Perform the A/F CONTROL operation with the engine in an idling condition (press the RIGHT or LEFT button to change the fuel injection volume).
(f) Monitor the voltage outputs of the A/F and HO2 sensors (AFS B1S1 and O2S B1S2) displayed on the tester.

HINT:

- The A/F CONTROL operation lowers the fuel injection volume by 12.5 % or increases the injection volume by 25 %.
- Each sensor reacts in accordance with increases and decreases in the fuel injection volume.

Standard:

Tester Display (Sensor)	Injection Volumes	Status	Voltages
AFS B1S1 (A/F)	+25 %	Rich	Less than 3.0
AFS B1S1 (A/F)	−12.5 %	Lean	More than 3.35
O2S B1S2 (HO2)	+25 %	Rich	More than 0.55
O2S B1S2 (HO2)	−12.5 %	Lean	Less than 0.4

RESULT:

Status A/F S1	Status O2S S2	A/F Condition and A/F and HO2 Sensors Condition	Misfires	Main Suspected Trouble Areas	Proceed To
Lean/Rich	Lean/Rich	Normal	−	• Three−way Catalytic Converter (TWC) • Gas leakage from exhaust system	A
Lean	Lean/Rich	A/F sensor malfunction	−	• A/F sensor	B
Rich	Lean/Rich	A/F sensor malfunction	−	• A/F sensor	B
Lean/Rich	Lean	HO2 sensor malfunction	−	• HO2 sensor • Gas leakage from exhaust system	C
Lean/Rich	Rich	HO2 sensor malfunction	−	• HO2 sensor • Gas leakage from exhaust system	C
Lean	Lean	Actual air−fuel ratio lean	May occur	• Extremely rich or lean actual air−fuel ratio • Gas leakage from exhaust system	A
Rich	Rich	Actual air−fuel ratio lean	−	• Extremely rich or lean actual air−fuel ratio • Gas leakage from exhaust system	A

Lean: During A/F CONTROL, the A/F sensor output voltage (AFS) is consistently more than 3.35 V, and the HO2 sensor output voltage (O2S) is consistently less than 0.4 V.
Rich: During A/F CONTROL, the AFS is consistently less than 3.0 V, and the O2S is consistently more than 0.55 V.

B → **Check and replace A/F sensor.**

C → **Check and replace heated oxygen sensor and check and repair exhaust gas leakage.**

A

3	**Check gas leakage on exhaust system.**

OK:

No exhaust gas leakage.

NG → **Repair or replace exhaust gas leakage point.**

OK

Replace front and rear three−way catalytic converter in the bank a malfunction is detected.

DIDRO−01

DTC	P0441	Evaporative Emission Control System Incorrect Purge Flow

DTC SUMMARY

DTCs	Monitoring Items	Malfunction Detection Conditions	Trouble Areas	Detection Timings	Detection Logic
P0441	Purge VSV (Vacuum Switching Valve) stuck open	Vacuum pump creates negative pressure (vacuum) in EVAP system and EVAP system pressure measured. 0.02 inch leak pressure standard is measured at the start and at the end of the leak check. If stabilized pressure higher than [second 0.02 inch leak pressure standard x 0.2], ECM determines that purge VSV stuck open	• Purge VSV • Connector/wire harness (Purge VSV − ECM) • ECM • Pump module • Leakage from EVAP system	While ignition Switch OFF	2 trip
P0441	Purge VSV stuck closed	After EVAP leak check performed, purge VSV turned ON (open), and atmospheric air introduced into EVAP system. 0.02 inch leak pressure standard is measured at the start and at the end of the leak check. If pressure does not return to near atmospheric pressure, ECM determines that purge valve stuck closed	• Purge VSV • Connector/wire harness (Purge VSV − ECM) • ECM • Pump module • Leakage from EVAP system	While ignition Switch OFF	2 trip
P0441	Purge flow	While engine running, following conditions successively met: • Negative pressure not created in EVAP system when purge VSV turned ON (open) • EVAP system pressure change less than 0.5 kPa (3.75 mmHg) when vent valve turned ON (closed) • Atmospheric pressure change before and after purge flow monitor less than 0.1 kPa (0.75 mmHg)	• Purge VSV • Connector/wire harness (Purge VSV − ECM) • Leakage from EVAP line (Purge VSV − Intake manifold) • ECM	While engine running	2 trip

CIRCUIT DESCRIPTION

The circuit description can be found in the EVAP (Evaporative Emission) Inspection Procedure (see page DI−884).

MONITOR DESCRIPTION

The two monitors, Key−Off and Purge Flow, are used to detect malfunctions relating to DTC P0441. The Key−Off monitor is initiated by the ECM internal timer, known as the soak timer, 5 hours* after the ignition switch is turned to OFF. The purge flow monitor runs while the engine is running.

1. KEY−OFF MONITOR

5 hours* after the ignition switch is turned OFF, the electric vacuum pump creates negative pressure (vacuum) in the EVAP (Evaporative Emission) system. The ECM monitors for leaks and actuator malfunctions based on the EVAP pressure.

HINT:

*: If the engine coolant temperature is not below 35°C (95°F) 5 hours after the ignition switch is turned off, the monitor check starts 2 hours later. If it is still not below 35°C (95°F) 7 hours after the ignition switch is turned off, the monitor check starts 2.5 hours later.

Sequence	Operations	Descriptions	Duration
−	ECM activation	Activated by soak timer, 5 hours (7 or 9.5 hours) after ignition switch turned to OFF.	−
A	Atmospheric pressure measurement	Vent valve turned OFF (vent) and EVAP system pressure measured by ECM in order to register atmospheric pressure. If EVAP pressure is not between 70 kPa and 110 kPa (525 mmHg and 825 mmHg), ECM cancels EVAP system monitor.	10 seconds
B	First 0.02 inch leak pressure measurement	In order to determine 0.02 inch leak pressure standard, vacuum pump creates negative pressure (vacuum) through 0.02 inch orifice and then ECM checks if vacuum pump and vent valve operate normally.	60 seconds
C	EVAP system pressure measurement	Vent valve turned ON (closed) to shut EVAP system. Negative pressure (vacuum) created in EVAP system, and EVAP system pressure then measured. Write down the measured value as it will be used in the leak check. If EVAP pressure does not stabilize within 15 minutes, ECM cancels EVAP system monitor.	15 minutes*
D	Purge VSV monitor	Purge VSV opened and then EVAP system pressure measured by ECM. Large increase indicates normal.	10 seconds
E	Second 0.02 inch leak pressure measurement	Leak check is performed after second 0.02 inch leak pressure standard is measured. If stabilized system pressure higher than second 0.02 inch leak pressure standard, ECM determines that EVAP system leaking.	60 seconds
F	Final check	Atmospheric pressure measured and then monitoring result recorded by ECM.	−

* If only a small amount of fuel is in the fuel tank, it takes longer for the EVAP pressure to stabilize.

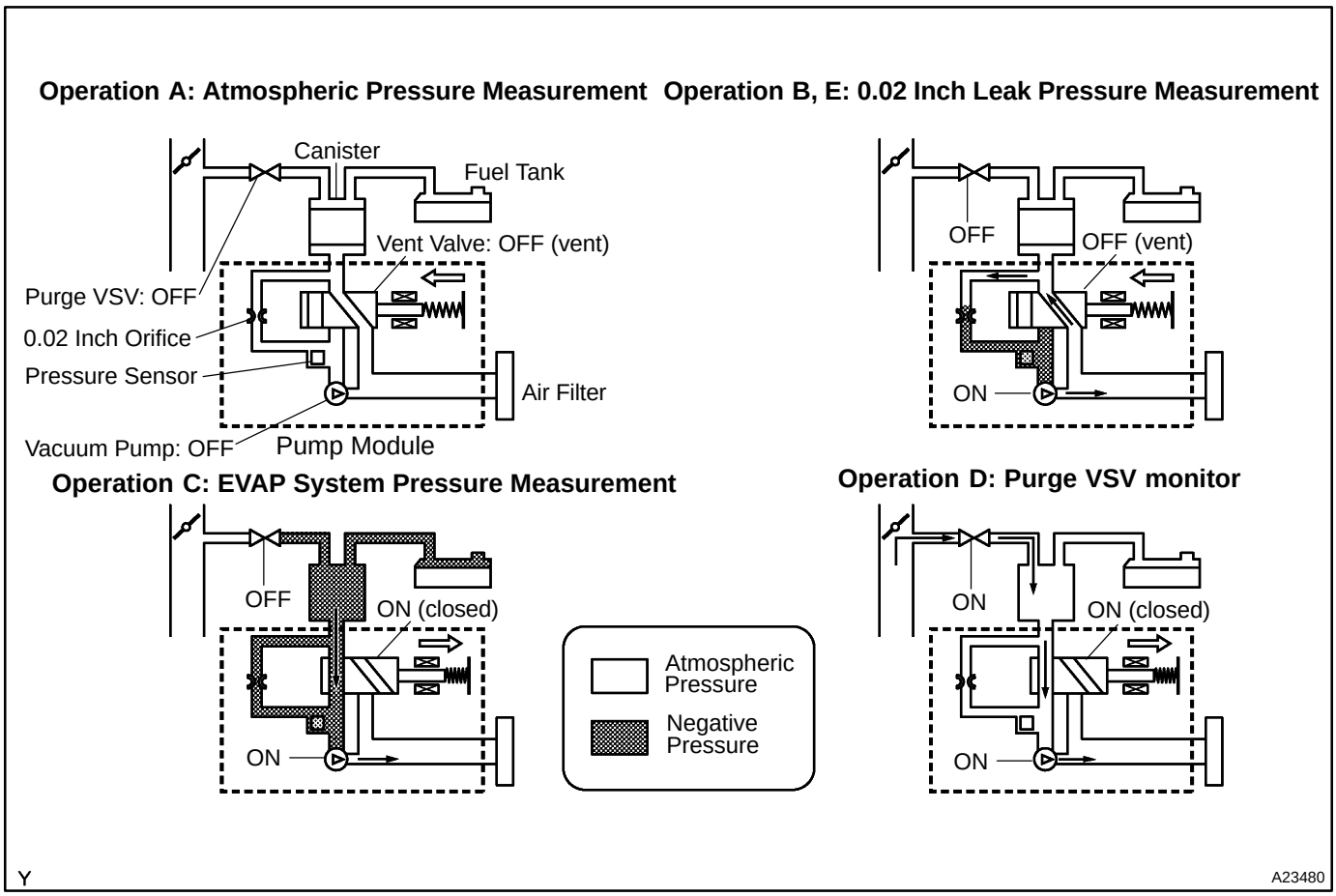

(a) Purge VSV stuck open

In operation C, the vacuum pump creates negative pressure (vacuum) in the EVAP (Evaporative Emission) system. The EVAP system pressure is then measured by the ECM using the pressure sensor. If the stabilized system pressure is higher than [second 0.02 inch leak pressure standard x 0.2], the ECM interprets this as the purge VSV (Vacuum Switching Valve) being stuck open. The ECM illuminates the MIL and sets the DTC (2 trip detection logic).

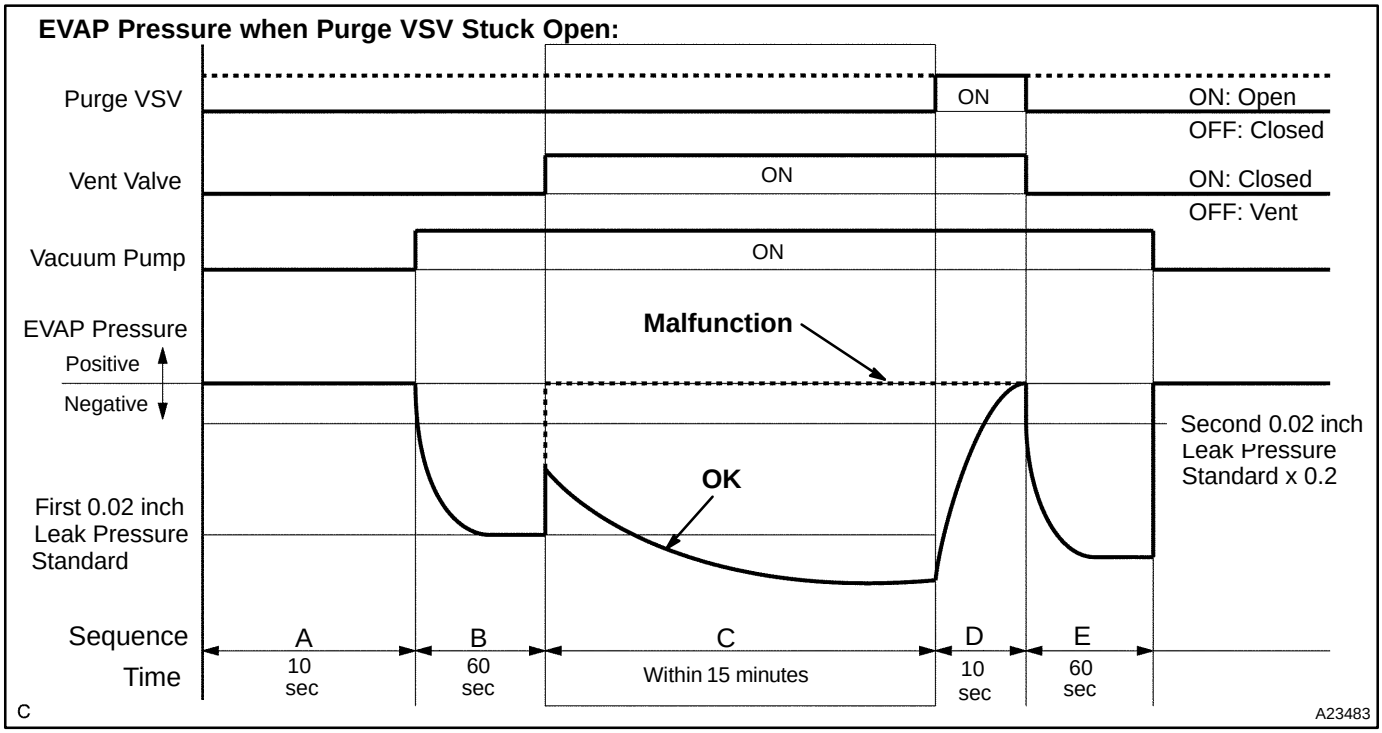

(b) Purge VSV stuck closed

In operation D, the pressure sensor measures the EVAP system pressure. The pressure measurement for purge VSV monitor is begun when the purge VSV is turned ON (open) after the EVAP leak check. When the measured pressure indicates an increase of 0.3 kPa (2.25 mmHg) or more, the purge VSV is functioning normally. If the pressure does not increase, the ECM interprets this as the purge VSV being stuck closed. The ECM illuminates the MIL and sets the DTC (2 trip detection logic).

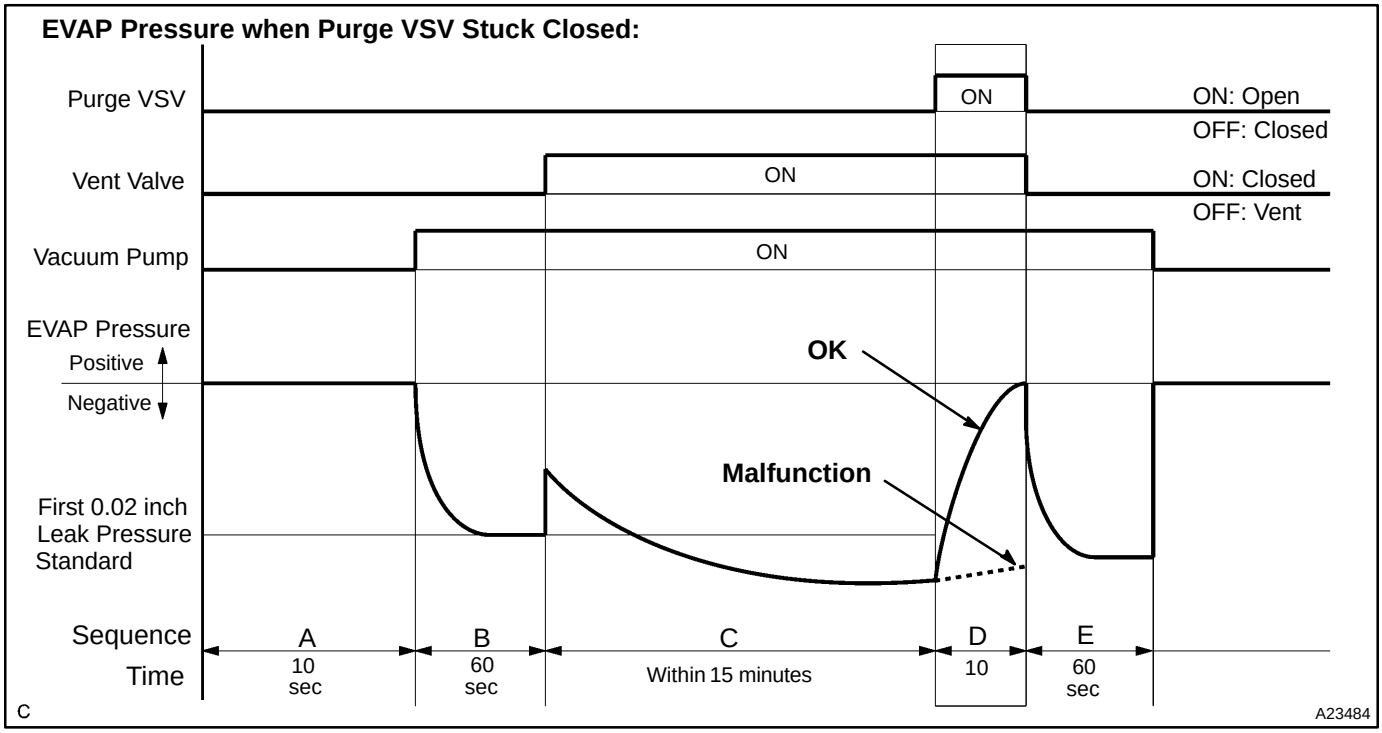

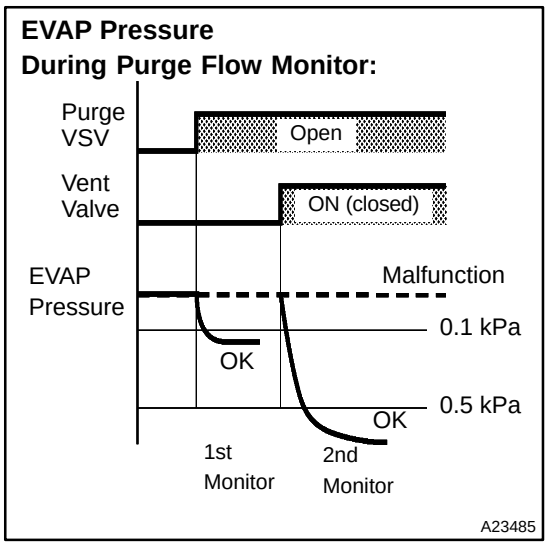

2. PURGE FLOW MONITOR

The purge flow monitor consists of the two step monitors. The 1st monitor is conducted every time and the 2nd monitor is activated if necessary.

- The 1st monitor
  While the engine is running and the purge VSV (Vacuum Switching Valve) is ON (open), the ECM monitors the purge flow by measuring the EVAP pressure change. If negative pressure is not created, the ECM begins the 2nd monitor.
- The 2nd monitor
  The vent valve is turned ON (closed) and the EVAP pressure is then measured. If the variation in the pressure is less than 0.5 kPa (3.75 mmHg), the ECM interprets this as the purge VSV being stuck closed, and illuminates the MIL and sets DTC P0441 (2 trip detection logic).

Atmospheric pressure check:

In order to ensure reliable malfunction detection, the variation between the atmospheric pressures, before and after conduction of the purge flow monitor, is measured by the ECM.

MONITOR STRATEGY

Related DTCs	P0441	Purge VSV stuck open
		Purge VSV stuck closed
		Purge flow
Required sensors/components	Purge VSV, Pump module	
Frequency of operation	Once per driving cycle	
Duration	Purge VSV stuck open and closed: Within 15 min. (varies with amount of fuel in tank) Purge flow: Within 10 min.	
MIL operation	2 driving cycle	
Sequence of operation	None	

TYPICAL ENABLING CONDITIONS

Item	Specification	
	Minimum	Maximum
The monitor will run whenever these DTCs are not present	See page DI−437	
Purge VSV stuck open and closed:		
Atmospheric pressure	70 to 110 kPa (525 to 825 mmHg)	
Battery voltage	10.5 V	−
Vehicle speed	−	2.5 mph (4 km/h)
Ignition switch	OFF	
Time after key off	5 or 7 or 9.5 hours	
EVAP pressure sensor malfunction (P0450, P0452, P0453)	Not detected	
EVAP canister purge valve	Not operated by scan tool	
EVAP canister vent valve	Not operated by scan tool	
EVAP leak detection pump	Not operated by scan tool	
Both of the following conditions 1 and 2 set before key off	−	
1. Duration that vehicle has been driven	5 min.	−
2. EVAP purge operation	Performed	
ECT	4.4 to 35°C (40 to 95°F)	
IAT	4.4 to 35°C (40 to 95°F)	
Key−off monitor sequence	1 to 8	
1. Atmospheric pressure	−	
Next sequence is run if the following condition is set	−	
Atmospheric pressure change	−	0.3 kPa (2.25 mmHg)
2. First reference pressure measurement	−	
Next sequence is run if the following conditions are set	Condition 1, 2 and 3	
1. EVAP pressure just after reference pressure measurement start	−	−1 kPa (−7.5 mmHg)
2. Reference pressure	−4.85 to −1.057 kPa (−36.38 to −7.93 mmHg)	
3. Reference pressure	Saturated within 60 seconds	

3. EVAP canister vent valve close stuck check	−	
Next sequence is run if the following condition is set	−	
EVAP pressure change after vent valve is ON	0.3 kPa (2.25 mmHg)	−
4. Vacuum introduction	−	
Next sequence is run if the following condition is set	−	
EVAP pressure	Saturated within 15 minutes	
5. EVAP canister purge valve close stuck check	−	
Next sequence is run if the following condition is set	−	
EVAP pressure change after purge valve is open	0.3 kPa (2.25 mmHg)	−
6. Second reference pressure measurement	−	
Next sequence is run if the following conditions are set	Condition 1, 2, 3 and 4	
1. EVAP pressure just after reference pressure	−	−1 kPa (−7.5 mmHg)
2. Reference pressure	−4.85 to −1.057 kPa (−36.38 to −7.93 mmHg)	
3. Reference pressure	Saturated within 60 seconds	
4. Difference between first reference pressure and second reference pressure	−	0.7 kPa (5.25 mmHg)
7. Leak check	−	
Next sequence is run if the following condition is set	−	
EVAP pressure when vacuum introduction is complete	−	Second reference pressure
8. Atmospheric pressure measurement	−	
EVAP monitor is complete if the following condition is set	−	
Atmospheric pressure difference between sequence 1 and 8	−	0.3 kPa (2.25 mmHg)
Purge flow:		
Engine condition	Running	
ECT	4.4°C (40°F)	−
IAT	4.4°C (40°F)	−
EVAP pressure sensor	Not detected	
EVAP canister purge valve	Not operated by scan tool	
EVAP system check	Not operated by scan tool	
Battery voltage	10 V	−
Purge duty cycle	8 %	−

TYPICAL MALFUNCTION THRESHOLDS

Detection Criteria	Threshold
Purge VSV stuck open:	
EVAP pressure when vacuum introduction is complete	Higher than reference pressure x 0.2
Purge VSV stuck closed:	
EVAP pressure change after EVAP canister purge valve is open	Less than 0.3 kPa (2.25 mmHg)
Purge flow:	
Both of the following conditions are met	Condition 1 or 2
1. EVAP pressure change when purge flow is started	Less than 0.1 kPa (0.75 mmHg)
2. EVAP pressure change during purge flow when EVAP pressure switching valve is ON (closed)	Less than 0.5 kPa (3.75 mmHg)

MONITOR RESULT (MODE 06 DATA)

Refer to page DI−445 for detailed information.

INSPECTION PROCEDURE

Refer to the EVAP Inspection Procedure (see page DI−884).

DIDRQ−01

DTC	P0455	Evaporative Emission Control System Leak Detected (Gross Leak)

DTC	P0456	Evaporative Emission Control System Leak Detected (Very Small Leak)

DTC SUMMARY

DTC	Monitoring Items	Malfunction Detection Conditions	Trouble Areas	Detection Timings	Detection Logic
P0455	EVAP gross leak	Vacuum pump creates negative pressure (vacuum) in EVAP system and EVAP system pressure measured. 0.02 inch leak pressure standard is measured at the start and at the end of the leak check. If stabilized pressure higher than [second 0.02 inch leak pressure standard x 0.2], ECM determines that EVAP system has large leakage.	• Fuel tank cap (loose) • Leakage from EVAP line (Canister − Fuel tank) • Leakage from EVAP line (Purge VSV − Canister) • Pump module • Leakage from fuel tank • Leakage from canister	While ignition switch OFF	2 trip
P0456	EVAP small leak	Vacuum pump creates negative pressure (vacuum) in EVAP system and EVAP system pressure measured. 0.02 inch leak pressure standard is measured at the start and at the end of the leak check. If stabilized pressure larger than second 0.02 inch leak pressure, ECM determines that EVAP system has small leakage.	Same above	While ignition switch OFF	2 trip

CIRCUIT DESCRIPTION

The circuit description can be found in the EVAP (Evaporative Emission) Inspection Procedure (see page DI−884).

MONITOR DESCRIPTION

5 hours* after the ignition switch is turned OFF, the electric vacuum pump creates negative pressure (vacuum) in the EVAP (Evaporative Emission) system. The ECM monitors for leaks and actuator malfunctions based on the EVAP pressure.

HINT:

*: If the engine coolant temperature is not below 35°C (95°F) 5 hours after the ignition switch is turned off, the monitor check starts 2 hours later. If it is still not below 35°C (95°F) 7 hours after the ignition switch is turned off, the monitor check starts 2.5 hours later.

Sequence	Operations	Descriptions	Duration
−	ECM activation	Activated by soak timer, 5 hours (7 or 9.5 hours) after ignition switch turned to OFF.	−
A	Atmospheric pressure measurement	Vent valve turned OFF (vent) and EVAP system pressure measured by ECM in order to register atmospheric pressure. If EVAP pressure is not between 70 kPa and 110 kPa (525 mmHg and 825 mmHg), ECM cancels EVAP system monitor.	10 seconds
B	First 0.02 inch leak pressure measurement	In order to determine 0.02 inch leak pressure standard, vacuum pump creates negative pressure (vacuum) through 0.02 inch orifice and them ECM checks if vacuum pump and vent valve operate normally.	60 seconds
C	EVAP system pressure measurement	Vent valve turned ON (closed) to shut EVAP system. Negative pressure (vacuum) created in EVAP system, and EVAP system pressure then measured. Write down the measured value as it will be used in the leak check. If EVAP pressure does not stabilize within 15 minutes, ECM cancels EVAP system monitor.	15 minutes*
D	Purge VSV monitor	Purge VSV opened and then EVAP system pressure measured by ECM. Large increase indicates normal.	10 seconds
E	Second 0.02 inch leak pressure measurement	Leak check is performed after second 0.02 inch leak pressure standard is measured. If stabilized system pressure higher than second 0.02 inch leak pressure standard, ECM determines that EVAP system leaking.	60 seconds
F	Final check	Atmospheric pressure measured and then monitoring result recorded by ECM.	−

* If only a small amount of fuel is in the fuel tank, it takes longer for the EVAP pressure to stabilize.

Operation A: Atmospheric Pressure Measurement

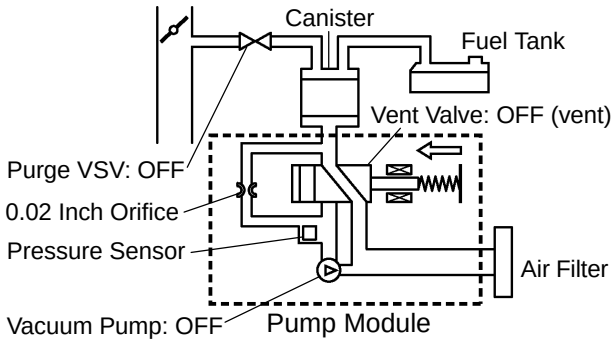

Operation B: 0.02 Inch Leak Pressure Measurement

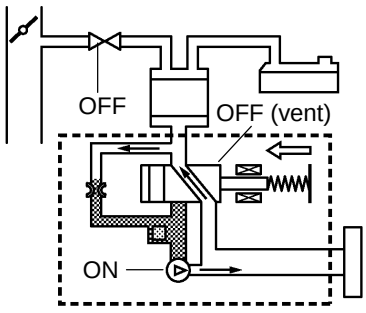

Operation C: EVAP Leak Check

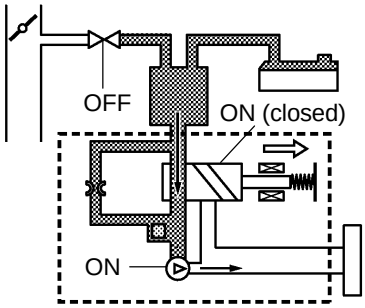

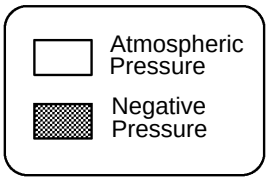

Operation D: Purge VSV monitor

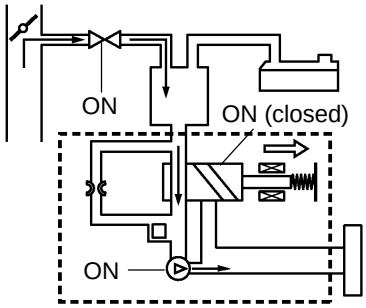

Y

B17399

(a) P0455: EVAP (Evaporative Emission) gross leak

In operation C, the vacuum pump creates negative pressure (vacuum) in the EVAP system and the EVAP system pressure is measured. If the stabilized system pressure is higher than [second 0.02 inch leak pressure standard x 0.2] (near atmospheric pressure), the ECM determines that the EVAP system has a large leakage, illuminates the MIL and sets the DTC (2 trip detection logic).

(b) P0456: EVAP very small leak

In operation C, the vacuum pump creates negative pressure (vacuum) in the EVAP system and the EVAP system pressure is measured. If the stabilized system pressure is higher than second 0.02 inch leak pressure standard, the ECM determines that the EVAP system has a small leakage, illuminates the MIL and sets the DTC (2 trip detection logic).

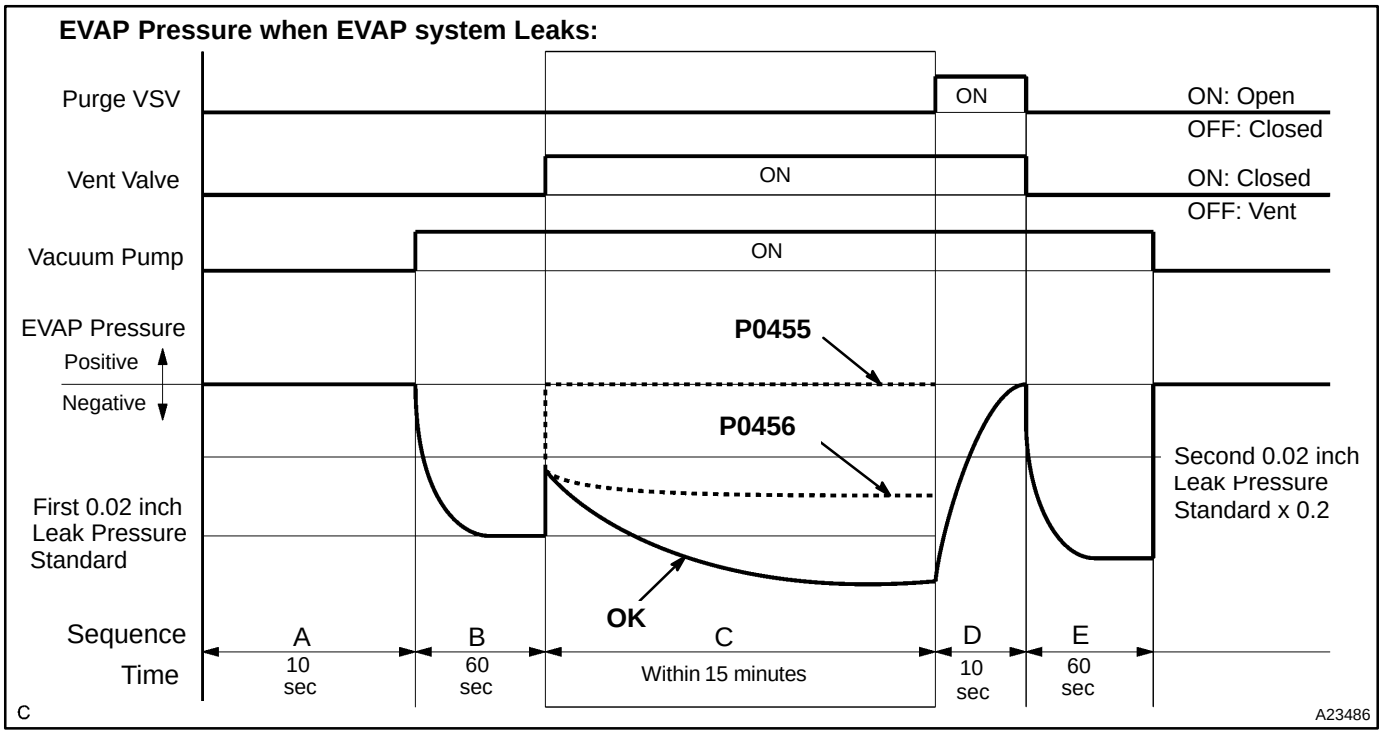

MONITOR STRATEGY

Related DTCs	P0455	Gross leak detected
	P0456	Very small leak (0.020 inch hole) detected
Required sensors/components	Purge VSV, Pump module	
Frequency of operation	Once per driving cycles	
Duration	Within 15 min. (varies with amount of fuel in tank)	
MIL operation	2 driving cycles	
Sequence of operation	None	

TYPICAL ENABLING CONDITIONS

Item	Specification	
	Minimum	Maximum
The monitor will run whenever these DTCs are not present	See page DI−437	
Atmospheric pressure	70 to 110 kPa (525 to 825 mmHg)	
Battery voltage	10.5 V	−
Vehicle speed	−	2.5 mph (4 km/h)
Ignition switch	OFF	

Time after key off	5 or 7 or 9.5 hours	
EVAP pressure sensor malfunction (P0450, P0452, P0453)	Not detected	
EVAP canister purge valve	Not operated by scan tool	
EVAP canister vent valve	Not operated by scan tool	
EVAP leak detection pump	Not operated by scan tool	
Both of the following conditions 1 and 2 set before key off	−	
1. Duration that vehicle has been driven	5 min.	−
2. EVAP purge operation	Performed	
ECT	4.4 to 35°C (40 to 95°F)	
IAT	4.4 to 35°C (40 to 95°F)	
Key−off monitor sequence	1 to 8	
1. Atmospheric pressure	−	
Next sequence is run if the following condition is set	−	
Atmospheric pressure change	−	0.3 kPa (2.25 mmHg)
2. First reference pressure measurement	−	
Next sequence is run if the following conditions are set	Condition 1, 2 and 3	
1. EVAP pressure just after reference pressure measurement start	−	−1 kPa (−7.5 mmHg)
2. Reference pressure	−4.85 to −1.057 kPa (−36.38 to −7.93 mmHg)	
3. Reference pressure	Saturated within 60 seconds	
3. EVAP canister vent valve close stuck check	−	
Next sequence is run if the following condition is set	−	
EVAP pressure change after vent valve is ON	0.3 kPa (2.25 mmHg)	−
4. Vacuum introduction	−	
Next sequence is run if the following condition is set	−	
EVAP pressure	Saturated within 15 minutes	
5. EVAP canister purge valve close stuck check	−	
Next sequence is run if the following condition is set	−	
EVAP pressure change after purge valve is open	0.3 kPa (2.25 mmHg)	−

6. Second reference pressure measurement	−	
Next sequence is run if the following conditions are set	Condition 1, 2, 3 and 4	
1. EVAP pressure just after reference pressure	−	−1 kPa (−7.5 mmHg)
2. Reference pressure	−4.85 to −1.057 kPa (−36.38 to −7.93 mmHg)	
3. Reference pressure	Saturated within 60 seconds	
4. Difference between first reference pressure and second reference pressure	−	0.7 kPa (5.25 mmHg)
7. Leak check	−	
Next sequence is run if the following condition is set	−	
EVAP pressure when vacuum introduction is complete	−	Second reference pressure
8. Atmospheric pressure measurement	−	
EVAP monitor is complete if the following condition is set	−	
Atmospheric pressure difference between sequence 1 and 8	−	0.3 kPa (2.25 mmHg)

TYPICAL MALFUNCTION THRESHOLDS

Detection Criteria	Threshold
Small leak (0.020 inch) malfunction detection:	
EVAP pressure when vacuum introduction is complete	Between reference pressure and reference pressure x 0.2
Gross leak detection:	
EVAP pressure when vacuum introduction is complete	Higher than reference pressure x 0.2

MONITOR RESULT (MODE 06 DATA)

Refer to page DI−445 for detailed information.

INSPECTION PROCEDURE

Refer to the EVAP Inspection Procedure (see page DI−884).

DICN8−02

DTC	P0504	Brake Switch ”A”/”B”Correlation

CIRCUIT DESCRIPTION

In addition to turning on the stop lamps, the stop lamp switch signals are used for a variety of engine, transmission, and suspension functions as well as being an input for diagnostic checks. It is important that the switch operates properly, therefore this switch is designed with two complementary signal outputs: STP and ST1−. The ECM analyzes these signal outputs to detect malfunctions in the stop lamp switch.

HINT:

Normal condition is as shown in the table.

Signal	Brake pedal released	In transition	Brake pedal depressed
STP	OFF	ON	ON
ST1−	ON	ON	OFF

DTC No.	DTC Detection Condition	Trouble Area
P0504	Conditions (a), (b) and (c) continue for 0.5 sec. or more: (a) Ignition switch ON (b) Brake pedal released (c) STP signal is OFF when the ST1− signal is OFF	• Short in stop lamp switch signal circuit • Stop lamp fuse • Stop lamp switch • ECM

WIRING DIAGRAM

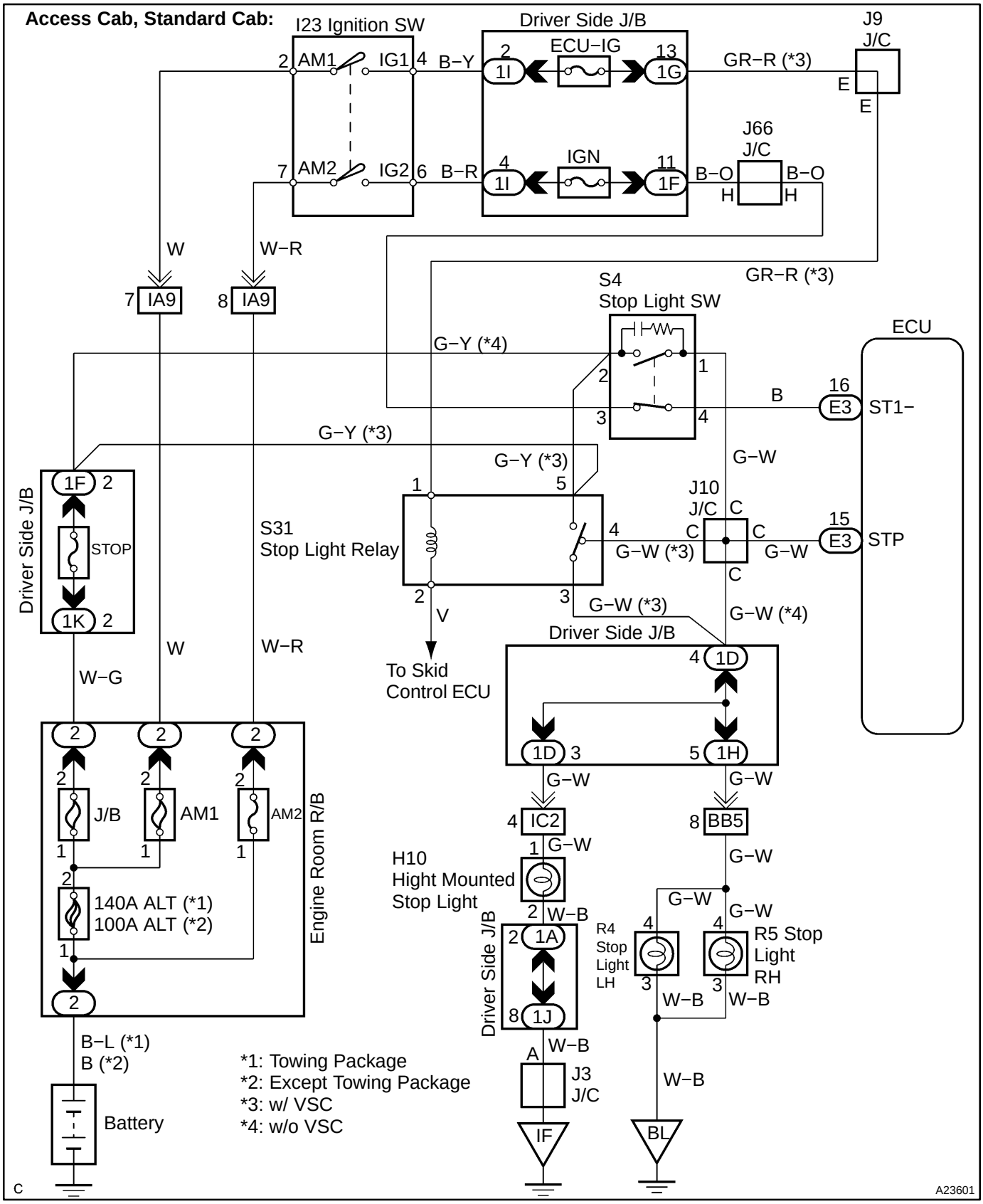

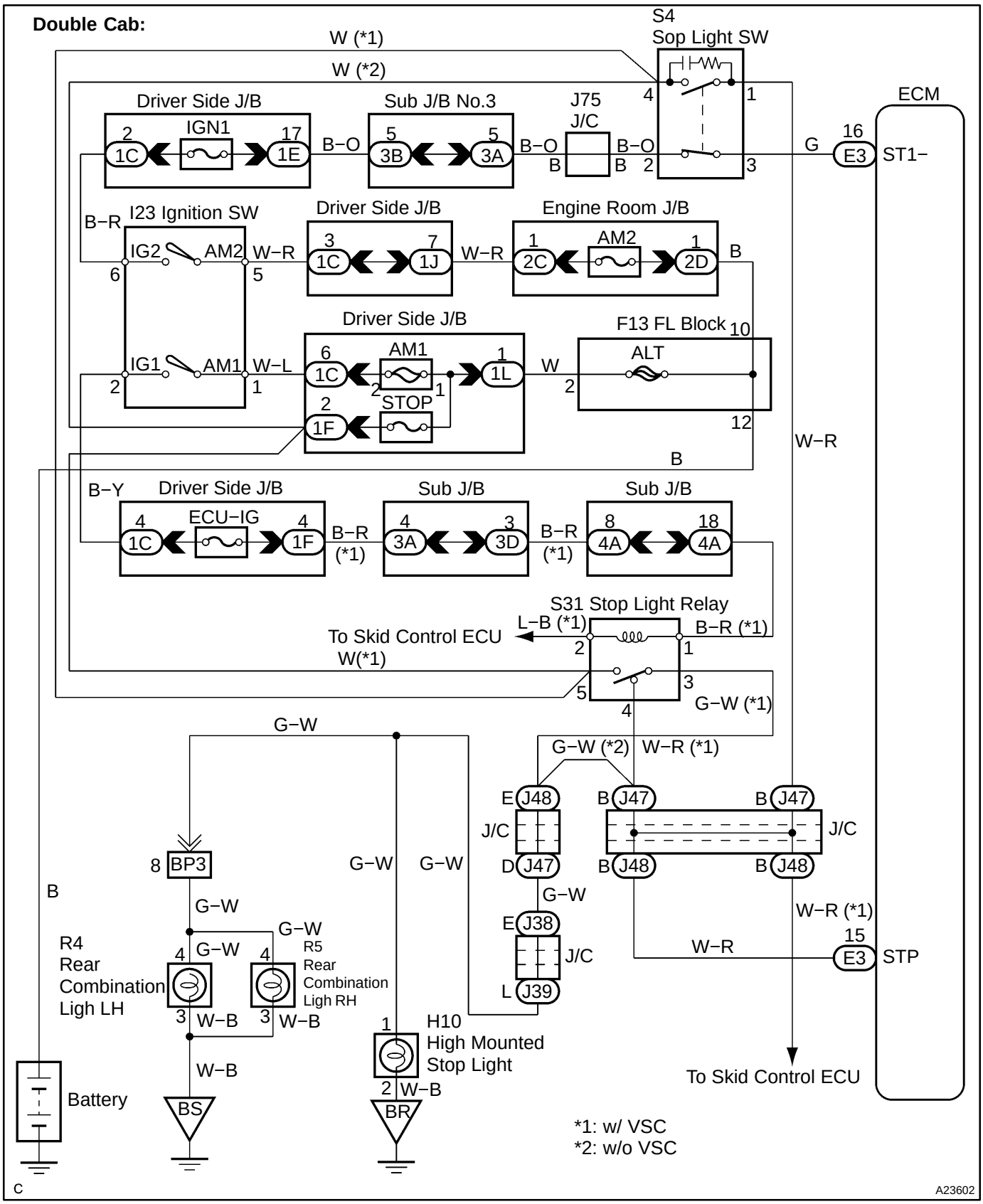
Double Cab:
W (*1)
W (*2)
S4
Sop Light SW
ECM
Driver Side J/B
Sub J/B No.3
J75
J/C
IGN1
2
1C
17
1E
B−O
5
3B
5
3A
B−O
B
B−O
B
4
1
2
3
G
16
E3
ST1−
B−R
I23 Ignition SW
IG2
AM2
6
5
W−R
Driver Side J/B
3
1C
7
1J
W−R
Engine Room J/B
1
2C
AM2
1
2D
B
IG1
AM1
2
1
W−L
Driver Side J/B
6
1C
AM1
2
1
1
1L
W
2
F13 FL Block
10
ALT
12
2
STOP
1F
W−R
B
B−Y
Driver Side J/B
4
1C
ECU−IG
4
1F
B−R
(*1)
Sub J/B
4
3A
3
3D
B−R
(*1)
Sub J/B
8
4A
18
4A
S31 Stop Light Relay
L−B (*1)
B−R (*1)
To Skid Control ECU
W(*1)
2
1
5
3
4
G−W (*1)
G−W
G−W (*2)
W−R (*1)
E
J48
J/C
D
J47
B
J47
J/C
B
J48
B
J47
B
J48
8
BP3
B
G−W
G−W
G−W
G−W
E
J38
J/C
L
J39
W−R (*1)
15
W−R
E3
STP
R4
Rear
Combination
Ligh LH
4
G−W
3
W−B
G−W
R5
Rear
Combination
Ligh RH
4
3
W−B
W−B
1
H10
High Mounted
Stop Light
2
W−B
Battery
BS
BR
To Skid Control ECU
*1: w/ VSC
*2: w/o VSC
C
A23602

INSPECTION PROCEDURE

HINT:

Read freeze frame data using the hand−held tester. Freeze frame data records the engine conditions when a malfunction is detected. When troubleshooting, freeze frame data can help determine if the vehicle was running or stopped, if the engine was warmed up or not, if the air−fuel ratio was lean or rich, as well as other data from the time when a malfunction occurred.

1	**Check operation of stop light.**

CHECK:

Check if the stop lights come on and go off normally when the brake pedal is operated and released.

NG → **Check and repair stop light circuit.**

OK ↓

2	**Check stop light switch (See page BE−70).**

NG → **Replace stop light switch.**

OK ↓

3	Check STP signal and ST1− voltage.

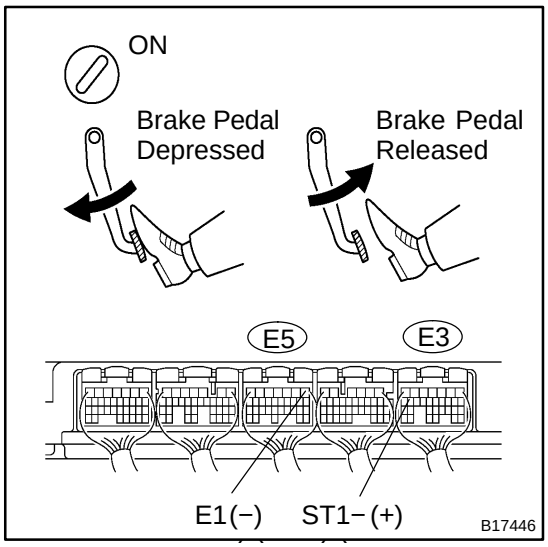

PREPARATION:

(a) Connect the hand−held tester to the DLC3.
(b) Turn the ignition switch ON.
(c) Select the item ”DIAGNOSIS / ENHANCED OBD II / DATA LIST / ALL / STOP LIGHT SW”.

CHECK:

Read the signal displayed on the hand−held tester.

OK:

Standard:

Brake Pedal	Specified Condition
Depressed	STP Signal ON
Released	STP Signal OFF

CHECK:

Measure the voltage between the specified terminals of the E3 and E5 ECM connectors.

OK:

Standard:

Tester Connection	Brake Pedal	Specified Condition
ST1− (E3−16) − E1 (E5−1)	Depressed	Below 1.5 V
ST1− (E3−16) − E1 (E5−1)	Released	7.5 to 14 V

OK → **Check for intermittent problems (See page DI−430).**

NG

4	Check harness and connector between ECM and stop light switch.

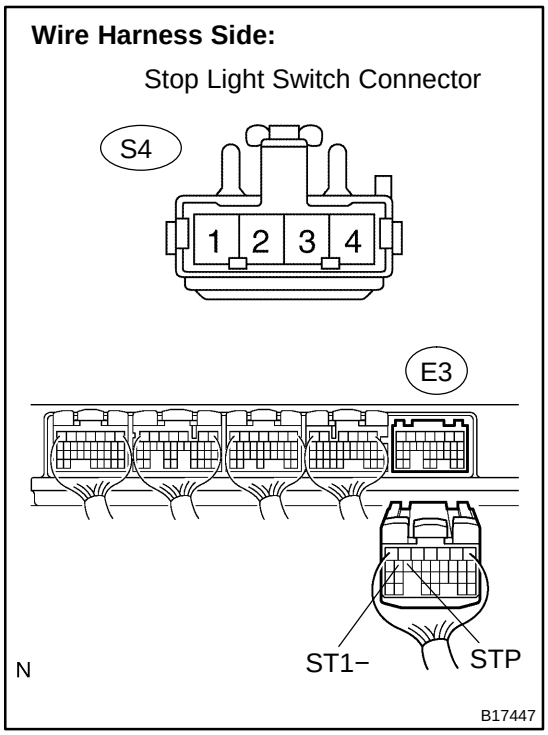

PREPARATION:

(a) Disconnect the S4 stop light switch connector.

(b) Disconnect the E3 ECM connector.

CHECK:

Measure the resistance between the wire harness side connectors.

OK:

Standard:

Tester Connection	Specified Condition
Stop light switch (S4−1) − STP (E3−15)	Below 1 Ω
Stop light switch (S4−3) − ST1− (E3−16)	Below 1 Ω
Stop light switch (S4−1) or STP (E3−15) − Body ground	10 kΩ or higher
Stop light switch (S4−3) or ST1− (E3−16) − Body ground	10 kΩ or higher

NG → **Repair or replace harness or connector.**

OK

Replace ECM (See page SF−82).

DICN9−02

DTC	P0505	Idle Air Control System

CIRCUIT DESCRIPTION

The idle speed is controlled by the ETCS (Electronic Throttle Control System).
The ETCS is composed of the throttle motor which operates the throttle valve, and the throttle position sensor, which detects the opening angle of the throttle valve.
The ECM controls the throttle motor to provide the proper throttle valve opening angle to obtain the target idle speed.

DTC No.	DTC Detection Condition	Trouble Area
P0501	Idle speed continues to vary greatly from target speed (2 trip detection logic)	• ETCS • Air induction system • PCV hose connection • ECM

MONITOR DESCRIPTION

The ECM regulates the idle speed by opening and closing the throttle valve using the ETCS. The ECM concludes that the idle speed control ECM function is malfunctioning if: 1) the actual idle RPM varies more than the specified amount, or 2) a learning value of the idle speed control remains at the maximum or minimum five times or more during a driving cycle. The ECM will turn on the MIL and set a DTC.
Example:
If the actual idle RPM varies from the target idle RPM by more than 100 (*1) rpm five times during a driving cycle, the ECM will turn on the MIL and a DTC is set.
HINT:
*1: RPM threshold varies with engine load.

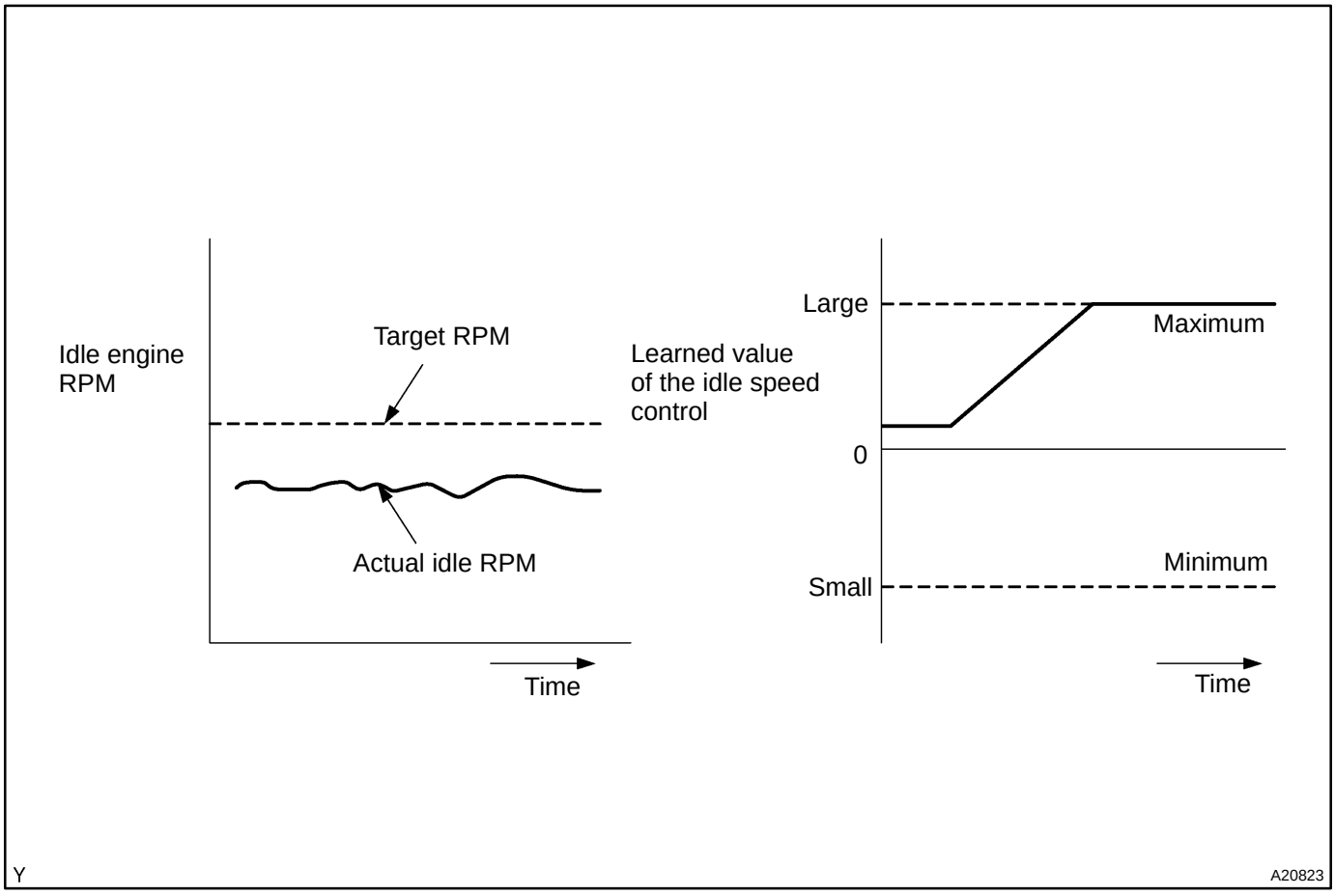

MONITOR STRATEGY

Related DTCs	P0505	Idle air control malfunction
Required sensors/components	Main sensors/components	Crankshaft position sensor
	Related sensors/components	Vehicle speed sensor, Engine coolant temperature sensor
Frequency of operation	Once per driving cycle	
Duration	10 min.	
MIL operation	2 driving cycles	
Sequence of operation	None	

TYPICAL ENABLING CONDITIONS

Item	Specification	
	Minimum	Maximum
The monitor will run whenever this DTC is not present	See page DI−437	
Engine	Running	

TYPICAL MALFUNCTION THRESHOLDS

Detection Criteria	Threshold
Either of the following conditions is met:	Condition 1 or 2
1. Frequency that both of the following conditions (a) and (b) are met:	5 times or more
(a) Engine RPM − target engine RPM	Less than −100 rpm or more than 150 rpm
(b) Vehicle condition	Stop after vehicle was driven by 6.25 mph (10 km/h) or more
2. Frequency that both of the following conditions (c) and (d) are met:	Once
(c) Engine RPM − target engine RPM	Less than −100 rpm or more than 150 rpm
(d) Intake air control flow rate learning value	2.48 L/sec. or less, or 11 L/sec. or more

INSPECTION PROCEDURE

HINT:

- When the throttle position is slightly opened (the accelerator pedal is slightly depressed) because a floor carpet is overlapped on the accelerator pedal, or if the accelerator pedal is not fully released, etc., DTC P0505 will possibly be detected.
- Read freeze frame data using the hand−held tester. Freeze frame data records the engine conditions when a malfunction is detected. When troubleshooting, freeze frame data can help determine if the vehicle was running or stopped, if the engine was warmed up or not, if the air−fuel ratio was lean or rich, as well as other data from the time when a malfunction occurred.

1	**Are there any other codes (besides P0505) being output?**

PREPARATION:

(a) Connect the hand−held tester to the DLC3.
(b) Turn the ignition switch ON and push the hand−held tester main switch ON.
(c) When using hand−held tester, enter the following menu: DIAGNOSIS / ENHANCED OBD II / DTC INFO / CURRENT CODES.

CHECK:

Read the DTC using the hand−held tester.

RESULT:

Display (DTC Output)	Proceed to
P0505	A
”P0505” and other DTCs	B

HINT:

If any other codes besides P0505 are output, perform the troubleshooting for those DTCs first.

B → **Go to relevant DTC chart (See page DI−477).**

A

2	**Check connection of PCV piping.**

NG → **Repair or replace PCV piping.**

OK

3	**Check air induction system (See page SF−1).**

CHECK:

Check for vacuum leaks in air induction system.

OK:

No leakage.

NG → **Repair or replace air induction system.**

OK

Check electric throttle control system (See page SF−41).

DTC	P050A	Cold Start Idle Air Control System Performance

DESCRIPTION

The Electronic Throttle Control System (ETCS) controls the engine idling speed. The ETCS operates the throttle actuator to open and close the throttle valve, and adjusts the intake air amount to achieve the target idling speed.

In addition, the ECM retards the ignition timing and the ETCS increases the intake air amount to quickly increase the catalyst temperature at cold start.

DTC No.	DTC Detection Conditions	Trouble Areas
P050A	Accumulated intake air amount during 10 seconds of idling after cold start, less than threshold (2 trip detection logic)	• Throttle body assembly • Mass air flow meter • Air induction system • PCV hose connections • ECM

MONITOR DESCRIPTION

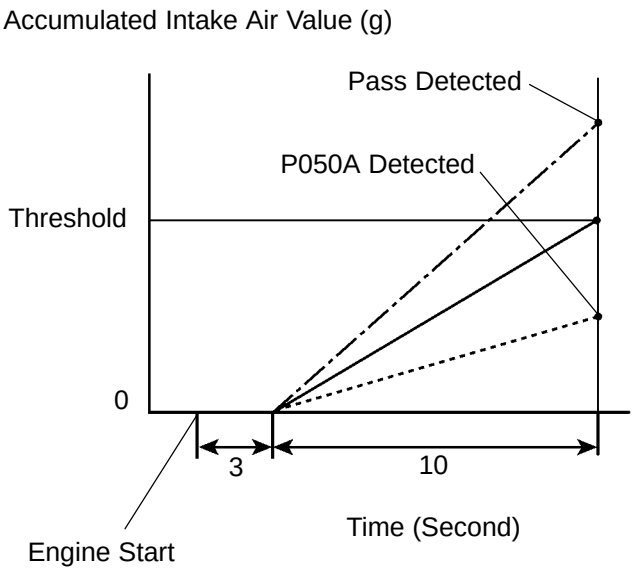

cmc0678

The ECM monitors the intake air amount during idling and the ignition timing.
When the engine coolant temperature is between −10°C and 50°C (14°F and 122°F), the ECM calculates the idling intake air amount for 10 seconds, beginning 3 seconds after the engine starts.
When the accumulated value is below the threshold, the ECM interprets this as a malfunction in the Idle Speed Control (ISC) system at cold start.
The ECM also monitors the ignition timing at cold start, and judges it to be incorrect when it is advanced to the same value for a warm engine for 5 seconds or more of the 10 second monitoring period.
Example:
P050A is detected when all conditions below are met (2 trip detection logic).
1. The engine coolant temperature is −10°C (14°F) or more when the engine starts.
2. The engine idles for 3 seconds after engine start.
3. The accumulated intake air amount is below the threshold.
If a malfunction is not repaired successfully, the ECM sets the DTC and illuminates the MIL 3 seconds after the engine is next started.
NOTICE:
When the negative battery terminal is disconnected during inspection or repairs, the ISC learning values are cleared. The ISC learning must be performed by warming up the engine and idling for 5 minutes with the engine coolant temperature at 75°C (167°F) or more because DTCs cannot be detected with the ISC learning values cleared.

MONITOR STRATEGY

Related DTCs	P050A	Idle speed control problem at cold
Required Sensors/Components (Main)	Mass air flow meter	
Required Sensors/Components (Related)	Engine Coolant Temperature (ECT) sensor, Throttle position sensor, Vehicle speed sensor	
Frequency of operation	Once per driving cycles	
Duration	10 seconds	
MIL Operation	2 driving cycles	
Sequence of operation	None	

TYPICAL ENABLING CONDITIONS

Item	Specification	
	Minimum	Maximum
The monitor will run whenever these DTCs are not present	See page DI−437	
P050A:		
Battery voltage	8 V	−
Time after engine start	3 seconds	−
Starter	OFF	
ECT at engine start	−10°C (14°F)	−
ECT	−10°C (14°F)	50°C (122°F)
Engine idling time	3 seconds	−
Fuel−cut	OFF	
Vehicle speed	−	1.86 mph (3 km/h)
Time after shift position changed	1 second	−

TYPICAL MALFUNCTION THRESHOLDS

P050A:

Accumulated air flow amount	Varies with ECT (Example: Less than 102 g)

INSPECTION PROCEDURE

HINT:

Read the freeze frame data using the intelligent tester. The freeze frame data records the engine condition when malfunctions are detected. When troubleshooting, the freeze frame data can help determine if the vehicle was moving or stationary, if the engine was warmed up or not, if the air−fuel ratio was lean or rich, and other data, from the time the malfunction occurred.

1	**Check any other DTCs output (In addition to DTC P050A).**

(a) Connect the intelligent tester to the DLC3.
(b) Turn the ignition switch ON.
(c) Turn the tester ON.
(d) Select the following the menu items: DIAGNOSIS / ENHANCED OBD II / DTC INFO / CURRENT CODES.
(e) Read the DTC.

RESULT:

Display (DTC Output)	Proceed to
P050A	A
P050A and other DTCs	B

HINT:

If any DTC other than P050A is output, troubleshoot those DTC first.

B → **GO TO DTC CHART.**

A

2	**Read value using intelligent tester (Fuel trim).**

HINT:
Calculate the total fuel trim values to check the characteristic deviation of the mass air flow meter.

(a) Connect the intelligent tester to the DLC3.
(b) Turn the ignition switch ON.
(c) Turn the tester ON.
(d) Select the following menu items: DIAGNOSIS / ENHANCED OBD II / DATA LIST / PRIMARY / SHORT FT #1 and LONG FT #1.
(e) Read the values displayed on the tester.
(f) Add together the SHORT FT #1 and LONG FT #1 values to obtain the total FUEL TRIM.

OK:

Total of the SHORT FT #1 and LONG FT #1 values is between −20 % and 20 %.

OK	**Go to step 8.**

NG

3	**Check PCV hose connections.**

OK:

PCV hose is connected correctly and is not damaged.

NG	**Go to step 5.**

OK

4	**Check air induction system.**

(a) Check the air induction system for vacuum leakage.

OK:

No leakage from the air induction system.

OK	**Go to step 6.**
NG	**Go to step 7.**

5	**Repair or replace PCV hose.**

NEXT → **Go to step 11.**

6	**Replace mass air flow meter.**

NEXT → **Go to step 11.**

7	**Repair or replace air induction system.**

NEXT → **Go to step 11.**

8	**Check throttle valve.**

(a) Check for deposits around the throttle valve.

OK:

No deposits around the throttle valve.

OK → **Go to step 9.**

NG → **Go to step 10.**

9	**Replace ECM.**

NEXT → **Go to step 11.**

10	**Replace throttle body assembly.**

NEXT

11	**Check whether DTC output recurs (DTC P050A).**

NOTICE:
In this operation, the engine must be cold (the same level as the engine coolant temperature recorded in the freeze frame data).

(a) Connect the intelligent tester to the DTC3.
(b) Turn the ignition switch ON.
(c) Turn the tester ON.
(d) Clear DTCs (See page DI−462).
(e) Switch the ECM from normal mode to check mode using the tester (See page DI−463).
(f) Start the engine to idle for a minute.

OK:

Stable fast idling.

(g) Read DTCs.

OK:

No DTCs output.

NEXT

END

DIDRS−01

DTC	P0560	System Voltage

MONITOR DESCRIPTION

The battery supplies electricity to the ECM even when the ignition switch is OFF. This electricity allows the ECM to store data such as DTC history, freeze frame data, fuel trim values, and other data.
If the battery voltage falls below a minimum level, the ECM will conclude that there is a fault in the power supply circuit. The next time the engine starts, the ECM will turn on the MIL and a DTC will be set.

DTC No.	DTC Detecting Condition	Trouble Area
P0560	Open in back up power source circuit	• Open in back−up power source circuit • EFI fuse • ECM

HINT:
If DTC P0560 present, the ECM will not store another DTC.

MONITOR STRATEGY

Related DTCs	P0560	System voltage malfunction
Required sensors/components	ECM	
Frequency of operation	Continuous	
Duration	3 sec.	
MIL operation	Immediate (*1)	
Sequence of operation	None	

*1: The DTC is set immediate. The MIL will be illuminated after the engine starts in the next time.

TYPICAL ENABLING CONDITIONS

Item	Specification	
	Minimum	Maximum
The monitor will run whenever this DTC is not present	See page DI−437	
Stand−by RAM	Initialized	

TYPICAL MALFUNCTION THRESHOLDS

Detection Criteria	Threshold
Battery voltage	Less than 3.5 V

WIRING DIAGRAM

Access Cab, Standard Cab:

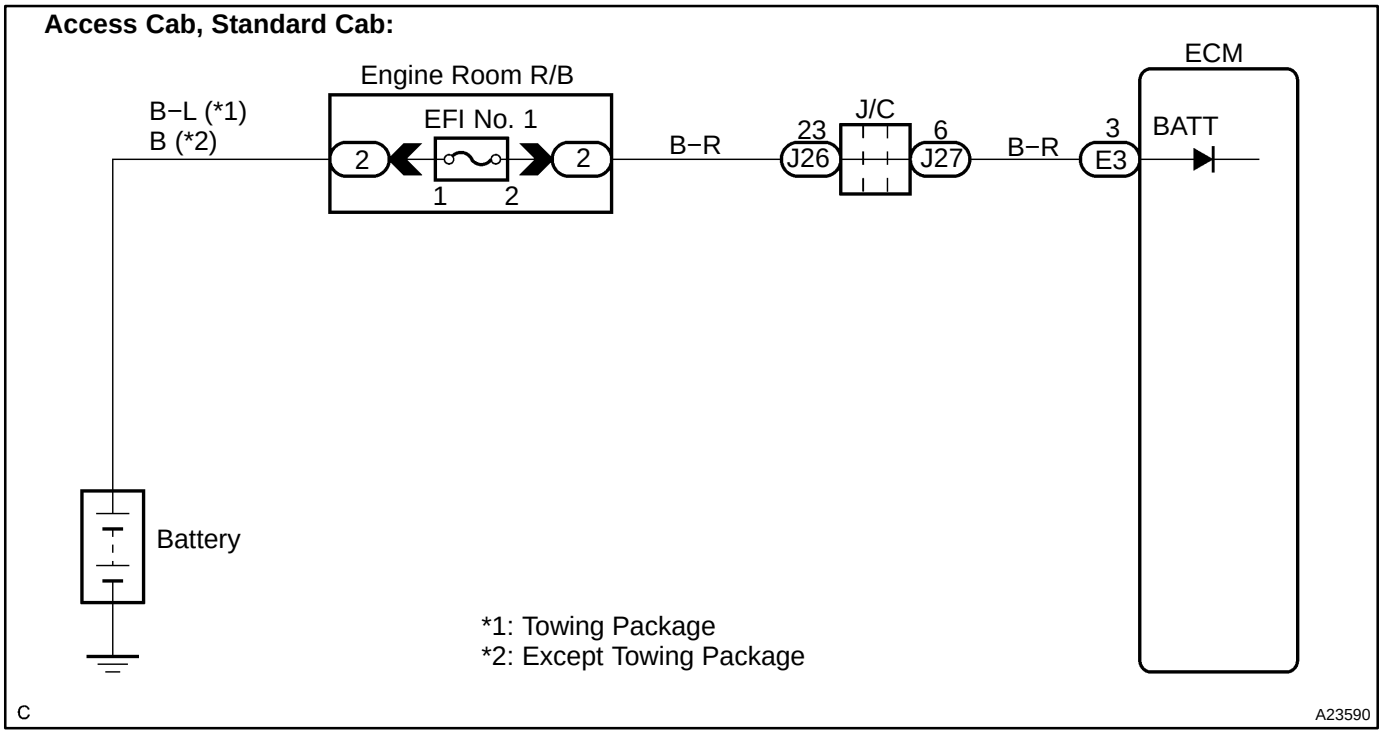

Double Cab:

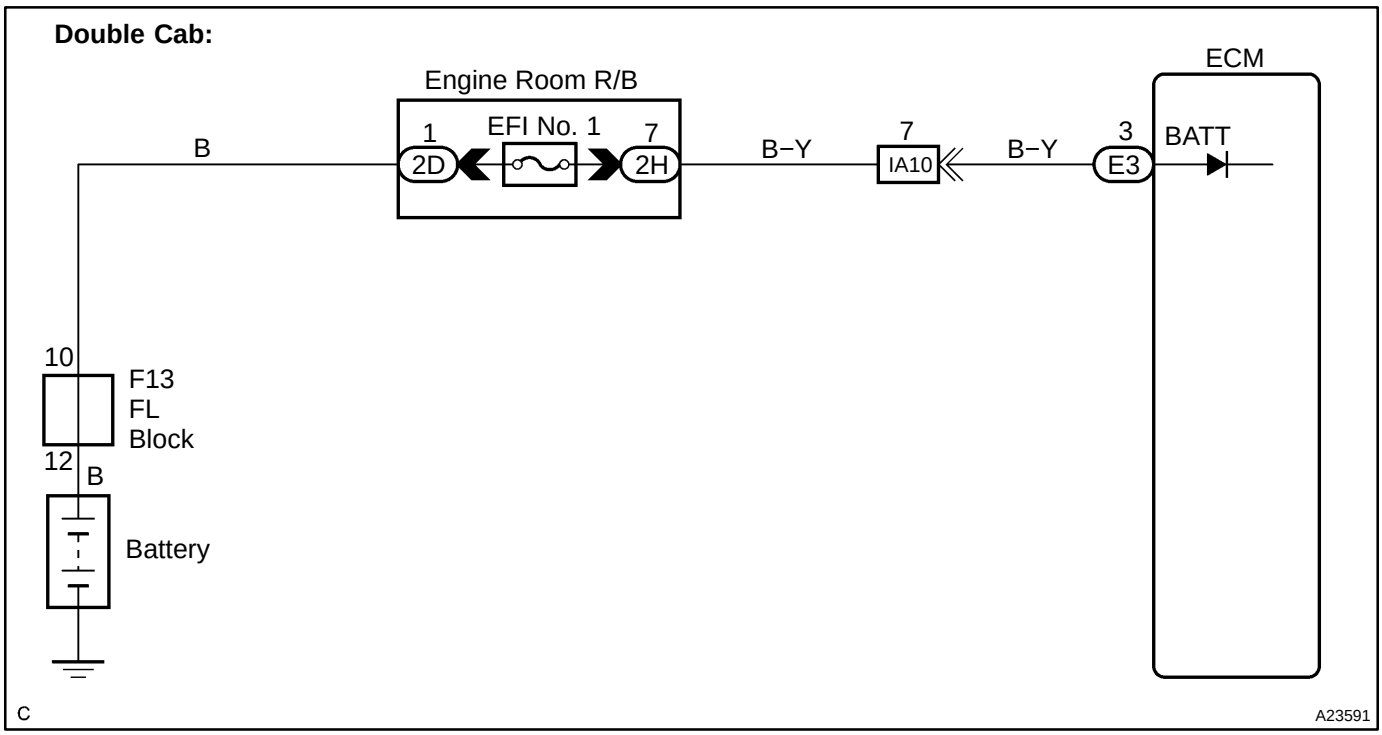

INSPECTION PROCEDURE

HINT:

Read freeze frame data using the hand−held tester. Freeze frame data records the engine conditions when a malfunction is detected. When troubleshooting, freeze frame data can help determine if the vehicle was running or stopped, if the engine was warmed up or not, if the air−fuel ratio was lean or rich, as well as other data from the time when a malfunction occurred.

1	**Check battery voltage.**

PREPARATION:

(a) Connect the hand−held tester to the DLC3.
(b) Turn the ignition switch to ON.
(c) Select the item: DIAGNOSIS / ENHANCED OBD II / DATA LIST / ALL / BATTERY VOLTAGE.

CHECK:

Read the battery voltage on the hand−held tester

RESULT:

Battery voltage	Proceed to
0 V	A
Except 0 V	B

B → **Go to step 5.**

A

2	**Check EFI No. 1 fuse of engine room J/B.**

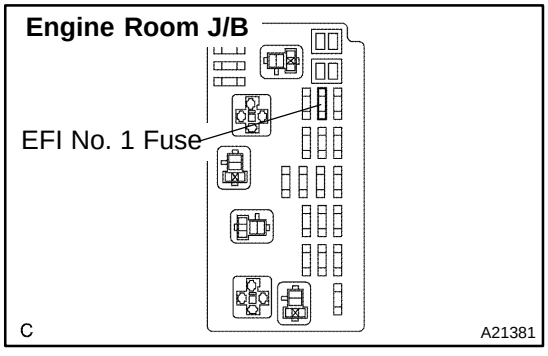

PREPARATION:

Remove the EFI No. 1 fuse from the engine room J/B.

CHECK:

Check the resistance of the EFI No. 1 fuse.

OK:

Standard: Below 1 Ω

NG → **Check for short in all harness and components connected to EFI No. 1 fuse.**

OK

3	Check voltage between terminal BATT and E1 of ECM connector.

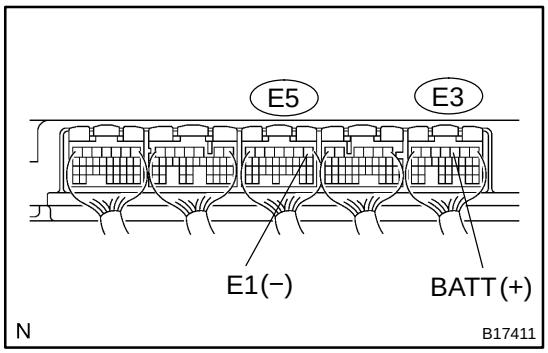

CHECK:

Measure the voltage between terminals of the E5 and E3 ECM connector.

OK:

Standard:

Tester Connection	Specified Condition
BATT (E3−3) − E1 (E5−1)	9 to 14 V

OK → **Check for intermittent problems (See page DI−430).**

NG

4	Check for open and short in harness and connector between ECM and EFI No. 1 fuse, EFI No. 1 fuse and battery.

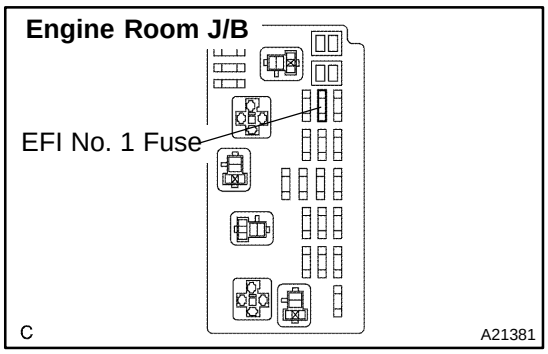

PREPARATION:

(a) Remove the EFI No. 1 fuse from the engine room J/B.

(b) Disconnect the E3 ECM connector.

CHECK:

Measure the resistance between the wire harness side connector.

OK:

Standard:

Tester Connection	Specified Condition
Engine Room J/B (EFI No. 1 fuse terminal 2) − BATT (E3−3)	Below 1 Ω
Engine Room J/B (EFI No. 1 fuse terminal 2) or BATT (E3−3) − Body ground	10 kΩ or higher

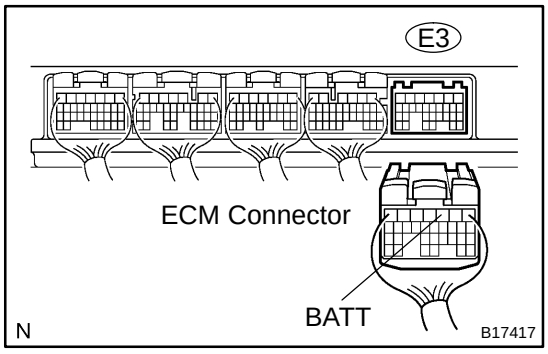

NG → **Repair or replace harness or connector.**

OK

5	Check the battery (See page CH−1).

NG → Replace battery.

OK →

Check and replace engine room J/B.

DIDRT−01

DTC	P0617	Starter Relay Circuit High

MONITOR DESCRIPTION

While the engine is being cranked, the battery positive voltage is applied to terminal STA of the ECM. If the vehicle is being driven and the ECM detects the starter control signal (STA), the ECM concludes that the starter control circuit is malfunctioning. The ECM will turn on the MIL and a DTC is set.

DTC No.	DTC Detection Condition	Trouble Area
P0617	When all conditions (a), (b) and (c) are satisfied for 20 seconds with battery (+B) voltage 10.5 V or more (a) Vehicle speed ≧ 12.4 mph (20 km/h) (b) Engine revolution ≧ 1,000 rpm (c) STA signal ON	• Park/neutral position switch • Starter relay circuit • Ignition switch • ECM

MONITOR STRATEGY

Related DTCs	P0617	Starter signal error
Required sensors/components	Main sensors/components	Starter signal
	Related sensors/components	Vehicle speed sensor, Engine speed sensor
Frequency of operation	Continuous	
Duration	20 sec.	
MIL operation	Immediate	
Sequence of operation	None	

TYPICAL ENABLING CONDITIONS

Item	Specification	
	Minimum	Maximum
The monitor will run whenever this DTC is not present	See page DI−437	
Battery voltage	10.5 V	−
Vehicle speed	12.4 mph (20 km/h)	−
Engine RPM	1,000 rpm	−

TYPICAL MALFUNCTION THRESHOLDS

Detection Criteria	Threshold
Starter signal	ON

WIRING DIAGRAM

Access Cab, Standard Cab:

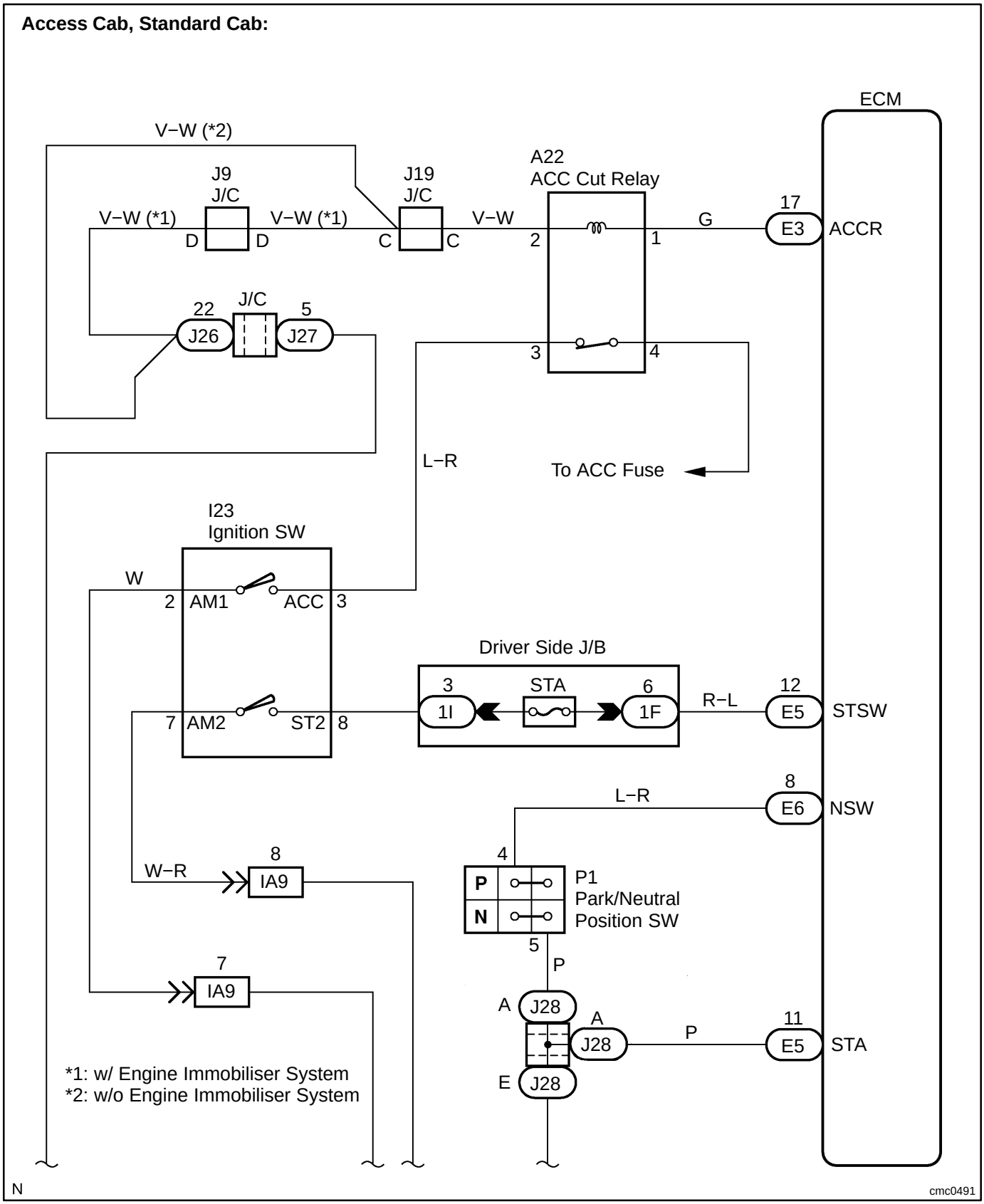

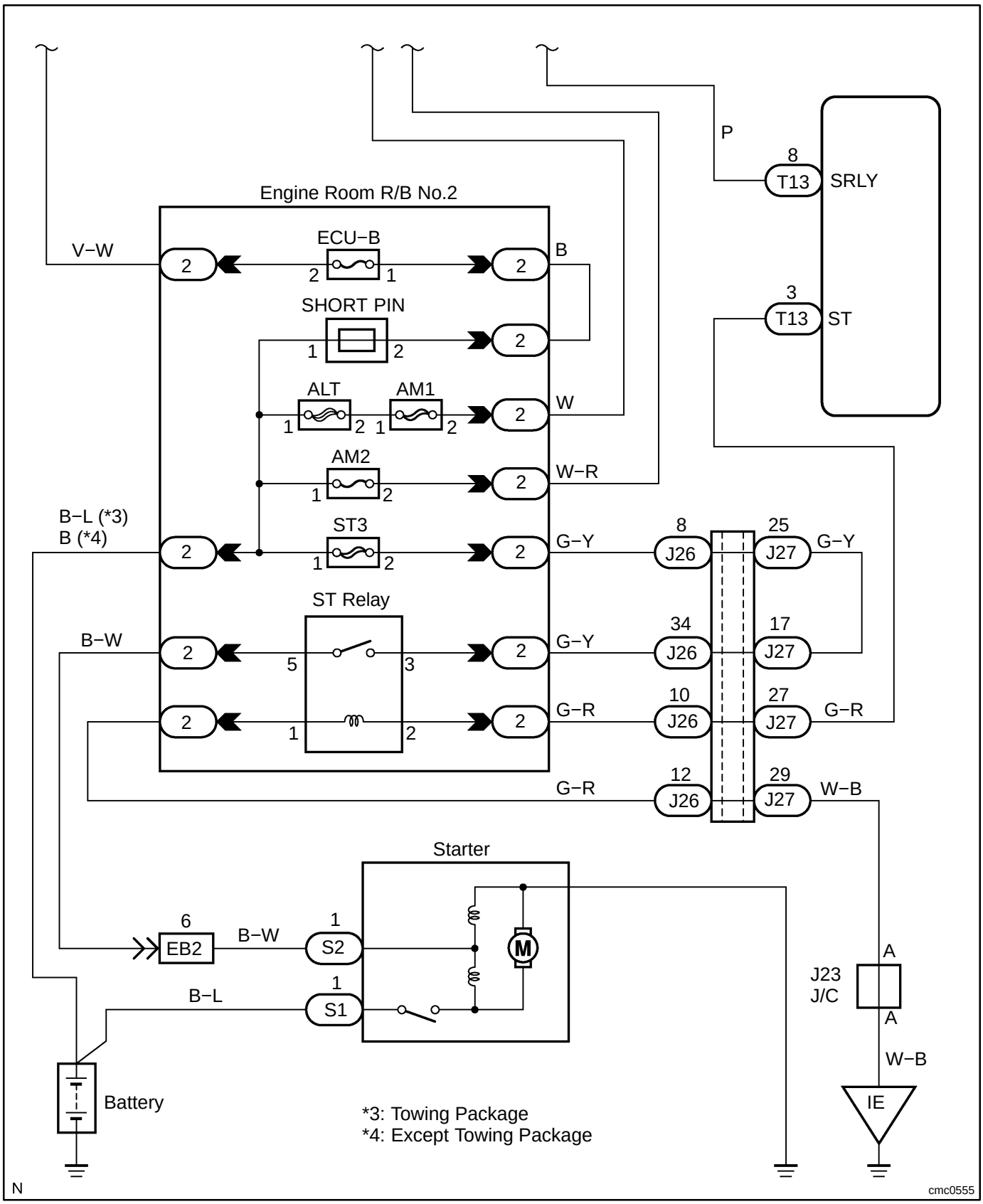
P
8
T13
SRLY
3
T13
ST
Engine Room R/B No.2
V−W
ECU−B
B
SHORT PIN
ALT
AM1
W
AM2
W−R
B−L (*3)
B (*4)
ST3
G−Y
8
J26
25
J27
G−Y
ST Relay
B−W
34
J26
17
J27
G−Y
10
J26
27
J27
G−R
G−R
12
J26
29
J27
W−B
Starter
6
EB2
B−W
1
S2
B−L
1
S1
M
A
J23
J/C
A
W−B
IE
Battery
*3: Towing Package
*4: Except Towing Package
N
cmc0555

Double Cab:

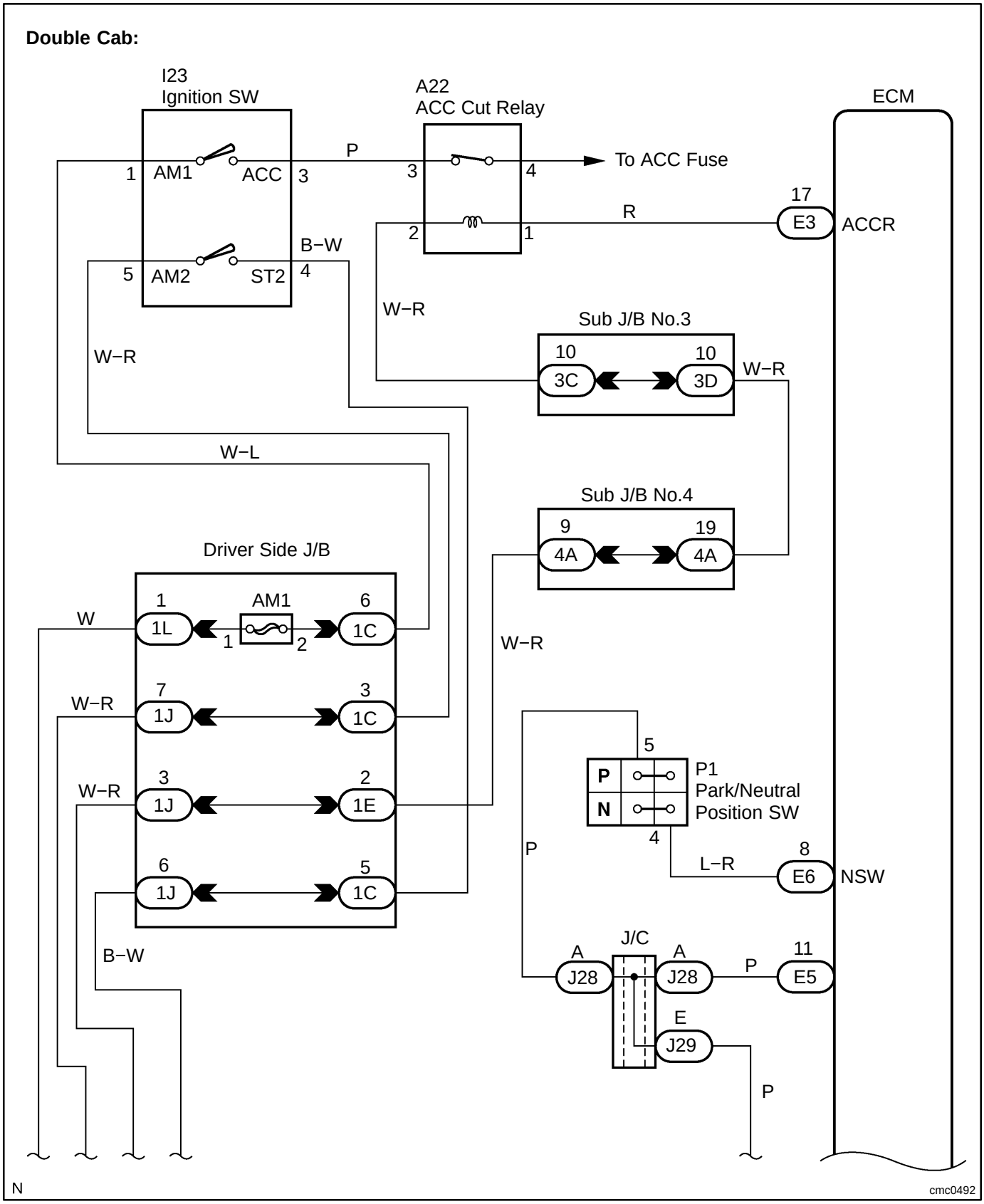
I23
Ignition SW
A22
ACC Cut Relay
ECM
1
AM1
ACC
3
P
3
4
To ACC Fuse
2
1
R
17
E3
ACCR
5
AM2
ST2
4
B−W
W−R
Sub J/B No.3
10
3C
10
3D
W−R
W−R
W−L
Sub J/B No.4
9
4A
19
4A
Driver Side J/B
W
1
1L
AM1
1
2
6
1C
W−R
7
1J
3
1C
W−R
3
1J
2
1E
6
1J
5
1C
B−W
5
P
N
P1
Park/Neutral
Position SW
4
P
L−R
8
E6
NSW
J/C
A
J28
A
J28
P
11
E5
E
J29
P
N
cmc0492

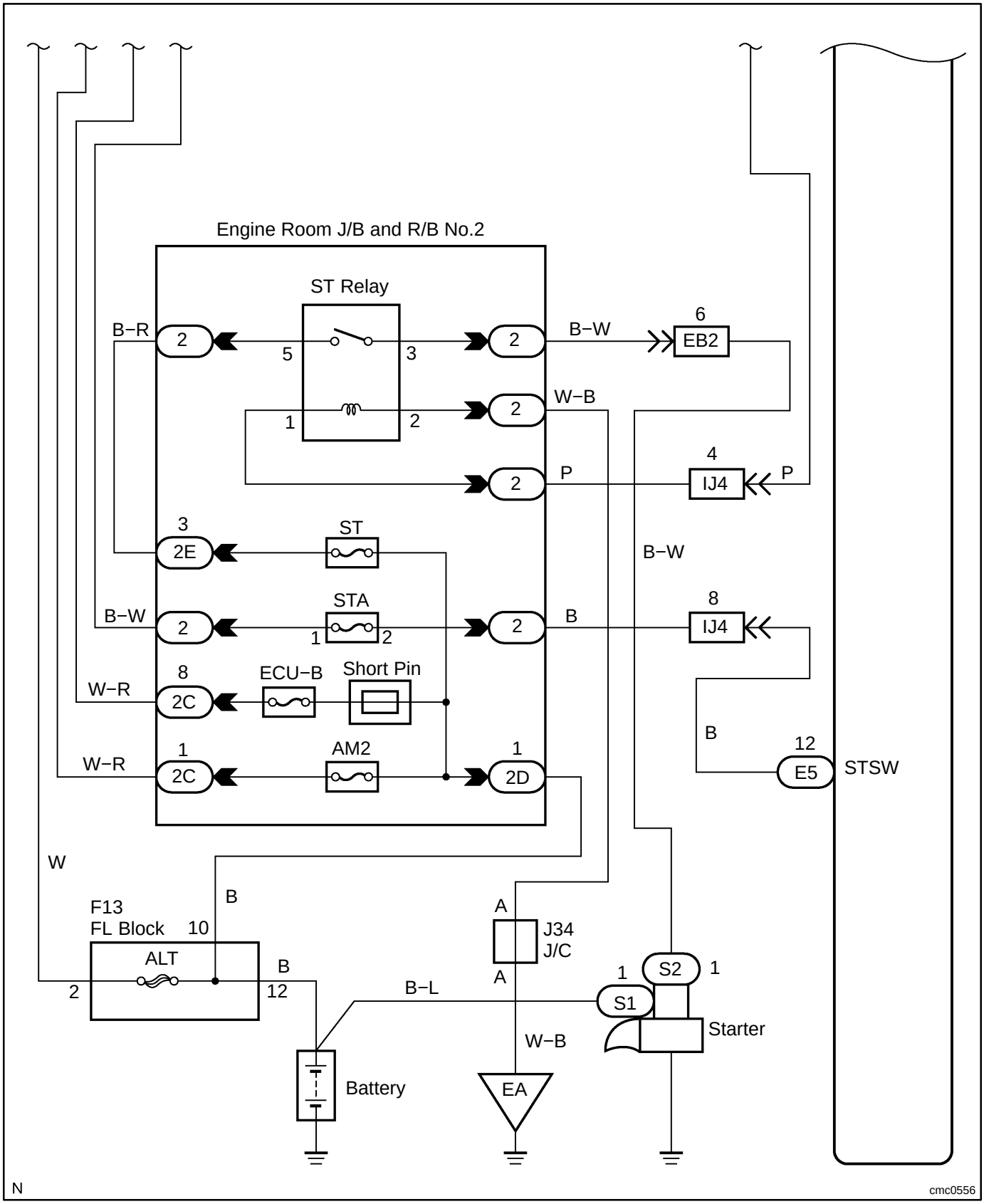
Engine Room J/B and R/B No.2
ST Relay
B−R
2
5
3
2
B−W
6
EB2
1
2
2
W−B
2
P
4
IJ4
P
3
2E
ST
B−W
B−W
2
STA
1
2
2
B
8
IJ4
W−R
8
2C
ECU−B
Short Pin
B
12
E5
STSW
W−R
1
2C
AM2
1
2D
W
B
F13
FL Block
10
ALT
2
B
12
A
J34
J/C
A
1
S2
1
S1
B−L
Starter
W−B
Battery
EA
N
cmc0556

INSPECTION PROCEDURE

HINT:

Read freeze frame data using the hand−held tester. Freeze frame data records the engine conditions when a malfunction is detected. When troubleshooting, freeze frame data can help determine if the vehicle was running or stopped, if the engine was warmed up or not, if the air−fuel ratio was lean or rich, as well as other data from the time when a malfunction occurred.

1	**Connect hand−held tester, and check STA signal.**

PREPARATION:

(a) Connect the hand−held tester to the DLC3.
(b) Turn the ignition switch ON, and push the hand−held tester main switch ON.
(c) When using hand−held tester, enter the following menu: DIAGNOSIS / ENHANCED OBD II / DATA LIST / ALL / STARTER SIG.

CHECK:

Read the STA signal on the hand−held tester while the starter operates.

OK:

Standard:

Ignition Switch Position	ON	START
STARTER SIG	OFF	ON

OK → **Go to step 5.**

NG

2	**Check park/neutral position switch (See page DI−1159).**

NG → **Replace park/neutral position switch. Go to next step 5 after the replacement.**

OK

3	**Check ignition switch (See page BE−37).**

NG → **Replace ignition switch. Go the next step 5 after the replacement.**

OK

4	**Connect hand−held tester, and check STA signal.**

PREPARATION:

(a) Connect the hand−held tester to the DLC3.
(b) Turn the ignition switch ON, and push the hand−held tester main switch ON.
(c) On the hand−held tester, enter the following menu: DIAGNOSIS / ENHANCED OBD II / DATA LIST / ALL / STARTER SIG.

CHECK:

Read the STA signal on the hand−held tester while the starter operates.

OK:

Standard:

Ignition Switch Position	ON	START
STARTER SIG	OFF	ON

NG → **Repair or replace harness or connector.**

OK

5	**Check DTC reoccur**

PREPARATION:

(a) Connect the hand−held tester.
(b) Turn the ignition switch ON and hand−held tester main switch ON.
(c) Clear DTCs (see page DI−462).
(d) Drive the vehicle more than 25 mph (40 km/h) for 20 seconds or more.

CHECK:

Check DTC reoccur.

RESULT:

Display (DTC Output)	Proceed to
P0617	A
No DTC output	B

A → **Replace ECM (See page SF−82).**

B

Check for intermittent problems (See page DI−430).

DIDRU−01

DTC	P0630	VIN not Programmed or Mismatch ECM/PCM

CIRCUIT DESCRIPTION

DTC P0630 is set when the Vehicle Identification Number (VIN) is not stored in the Engine Control Module (ECM) or the input VIN is not accurate. Input the VIN with the hand−held tester.

DTC No.	DTC Detecting Condition	Trouble Area
P0630	• VIN is not stored in ECM. • Input VIN in ECM is not accurate.	ECM

MONITOR STRATEGY

Related DTCs	P0630	VIN not programmed
Required sensors/components	Main sensors/components	ECM
	Related sensors/components	−
Frequency of operation	Continuous	
Duration	0.325 sec.	
MIL operation	Immediate	
Sequence of operation	None	

TYPICAL ENABLING CONDITIONS

Item	Specification	
	Minimum	Maximum
The monitor will run whenever this DTC is not present	See page DI−437	
Battery voltage	8 V	−
Ignition switch	ON	
Starter	OFF	

TYPICAL MALFUNCTION THRESHOLDS

Detection Criteria	Threshold
VIN code	Not programmed

COMPONENT OPERATING RANGE

Parameter	Standard Value
VIN code	Programmed

INSPECTION PROCEDURE

1	**Read current DTC.**

NOTICE:
If P0630 is present, the VIN must be input to the ECM using the hand−held tester. However, all DTCs are cleared automatically by the tester when inputting the VIN. If DTCs other than P0630 are present, check them first.

NEXT

2	**Input VIN with hand−held tester (See page DI−433).**

NEXT

END

DIDRC−01

DTC	P0100	Mass or Volume Air Flow Circuit

DTC	P0102	Mass or Volume Air Flow Circuit Low Input

DTC	P0103	Mass or Volume Air Flow Circuit High Input

CIRCUIT DESCRIPTION

The Mass Air Flow (MAF) meter measures the amount of air flowing through the throttle valve. The ECM uses this information to determine the fuel injection time and provide a proper air fuel ratio. Inside the MAF meter, there is a heated platinum wire exposed to the flow of intake air.

By applying a specific current to the wire, the ECM heats this wire to a given temperature. The flow of incoming air cools the wire and an internal thermistor, affecting their resistance. To maintain a constant current value, the ECM varies the voltage applied to these components in the MAF meter. The voltage level is proportional to the airflow through the sensor. The ECM interprets this voltage as the intake air amount.

The circuit is constructed so that the platinum hot wire and temperature sensor provide a bridge circuit, with the power transistor controlled so that the potential of A and B remains equal to maintain the set temperature.

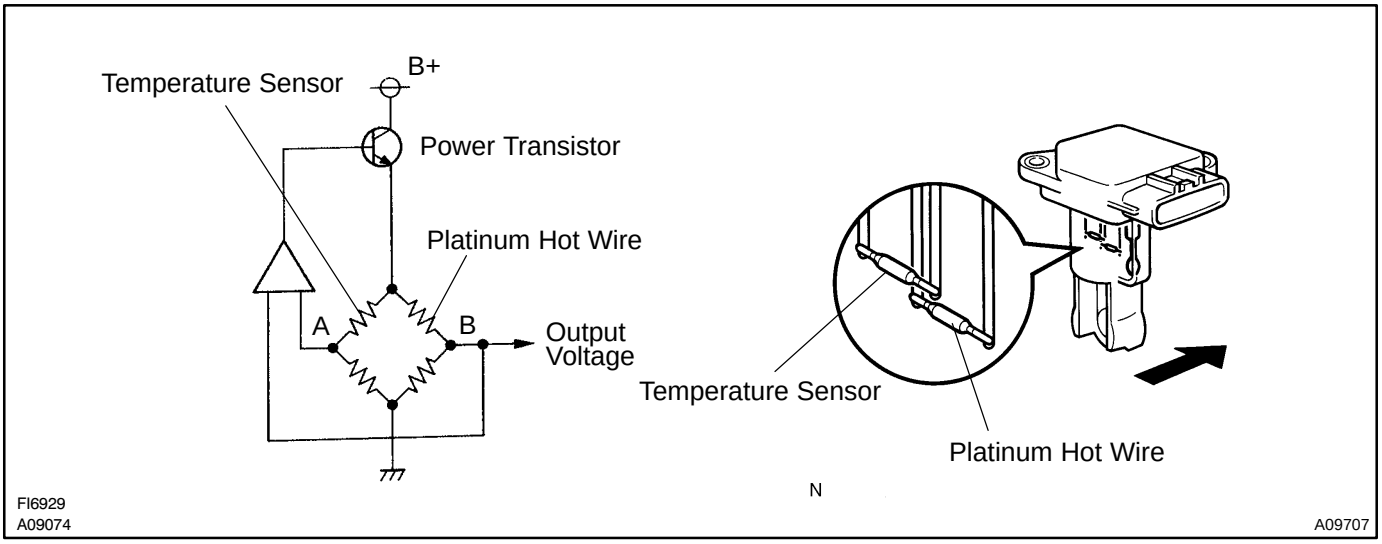

DTC No.	DTC Detection Condition	Trouble Area
P0100	Open or short in mass air flow meter circuit for more than 3 sec.	• Open or short in mass air flow meter circuit • Mass air flow meter • ECM
P0102	Open or short in mass air flow meter circuit for more than 3 sec.	
P0103	Open in mass air flow meter circuit for more than 3 sec. (EVG circuit) Short in mass air flow meter circuit for more than 3 sec. (+B circuit)	

HINT:
After confirming DTC P0100, P0102 or P0103, use the hand−held tester or the OBD II scan tool to confirm the MAF ratio from the ALL menu (to reach the ALL menu: DIAGNOSIS / ENHANCED OBD II / DATA LIST / ALL).

Mass Air Flow Value (gm/sec.)	Malfunction
Approx. 0.0	• Mass air flow meter power source circuit open • VG circuit open or short
271.0 or more	• EVG circuit open

MONITOR DESCRIPTION

If there is a defect in the MAF (Mass Air Flow) meter or an open or short circuit, the voltage level will deviate outside the normal operating range. The ECM interprets this deviation as a defect in the MAF meter and sets a DTC.
Example:
When the MAF meter voltage output is less than 0.2 V, or more than 4.9 V, and if either the condition continues for more than 3 sec.

MONITOR STRATEGY

Related DTCs	P0100	Mass air flow meter circuit range check (Fluttering)
	P0102	Mass air flow meter circuit range check (Low voltage)
	P0103	Mass air flow meter circuit range check (High voltage)
Required sensors/components	Mass air flow meter	
Frequency of operation	Continuous	
Duration	3 sec.	
MIL operation	Immediate (When engine speed is at less than 4,000 rpm) 2 driving cycles (When engine speed is at 4,000 rpm or more)	
Sequence of operation	None	

TYPICAL ENABLING CONDITIONS

The monitor will run whenever this DTC is not present	See page DI−437
The typical enabling condition is not available	−

TYPICAL MALFUNCTION THRESHOLDS

Detection Criteria	Threshold
P0100:	
Mass air flow meter voltage	Less than 0.2 V, or more than 4.9 V
P0102:	
Mass air flow meter voltage	Less than 0.2 V
P0103:	
Mass air flow meter voltage	More than 4.9 V

COMPONENT OPERATING RANGE

Parameter	Standard Value
Mass air flow meter voltage	0.4 to 2.2 V

WIRING DIAGRAM

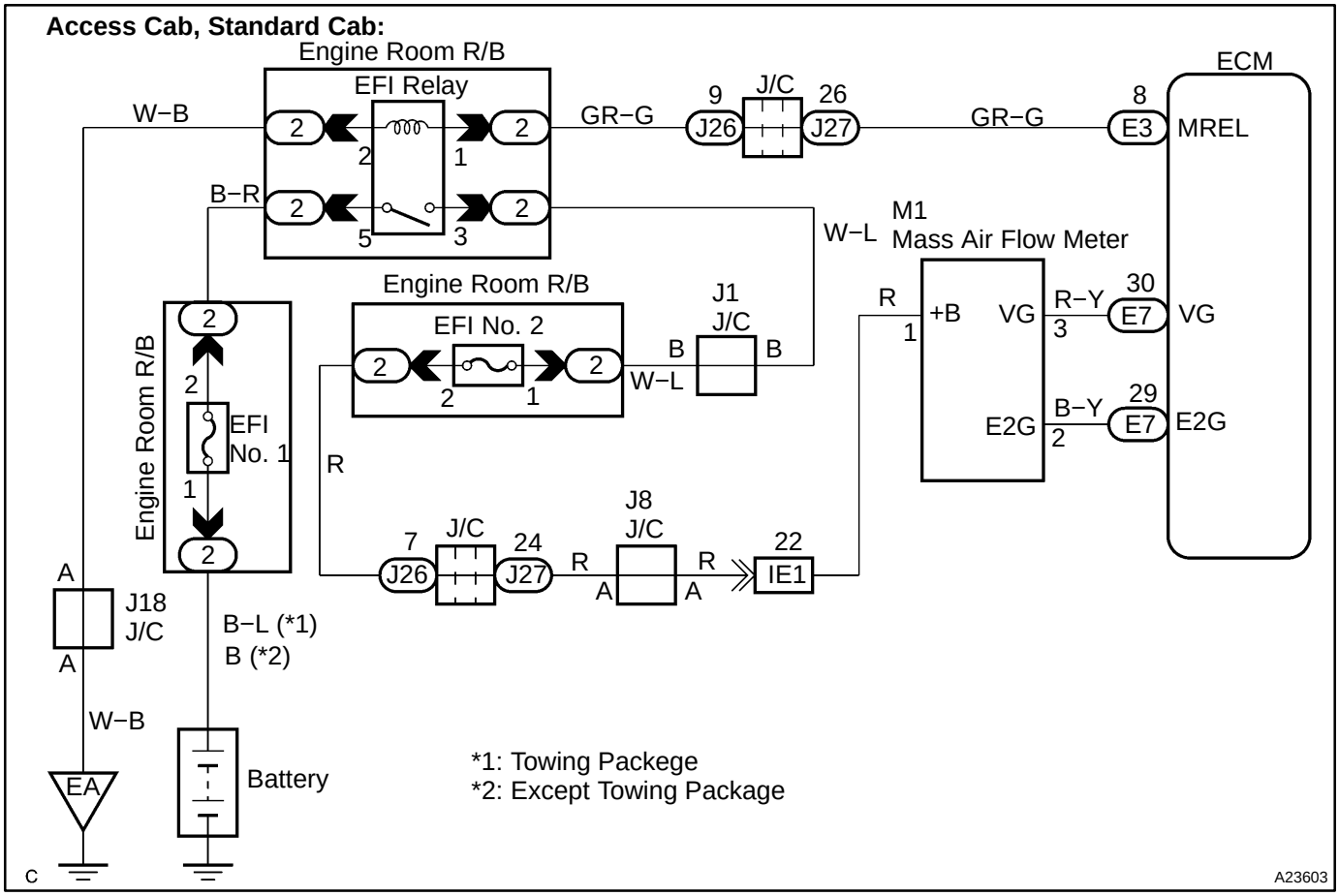

Double Cab:

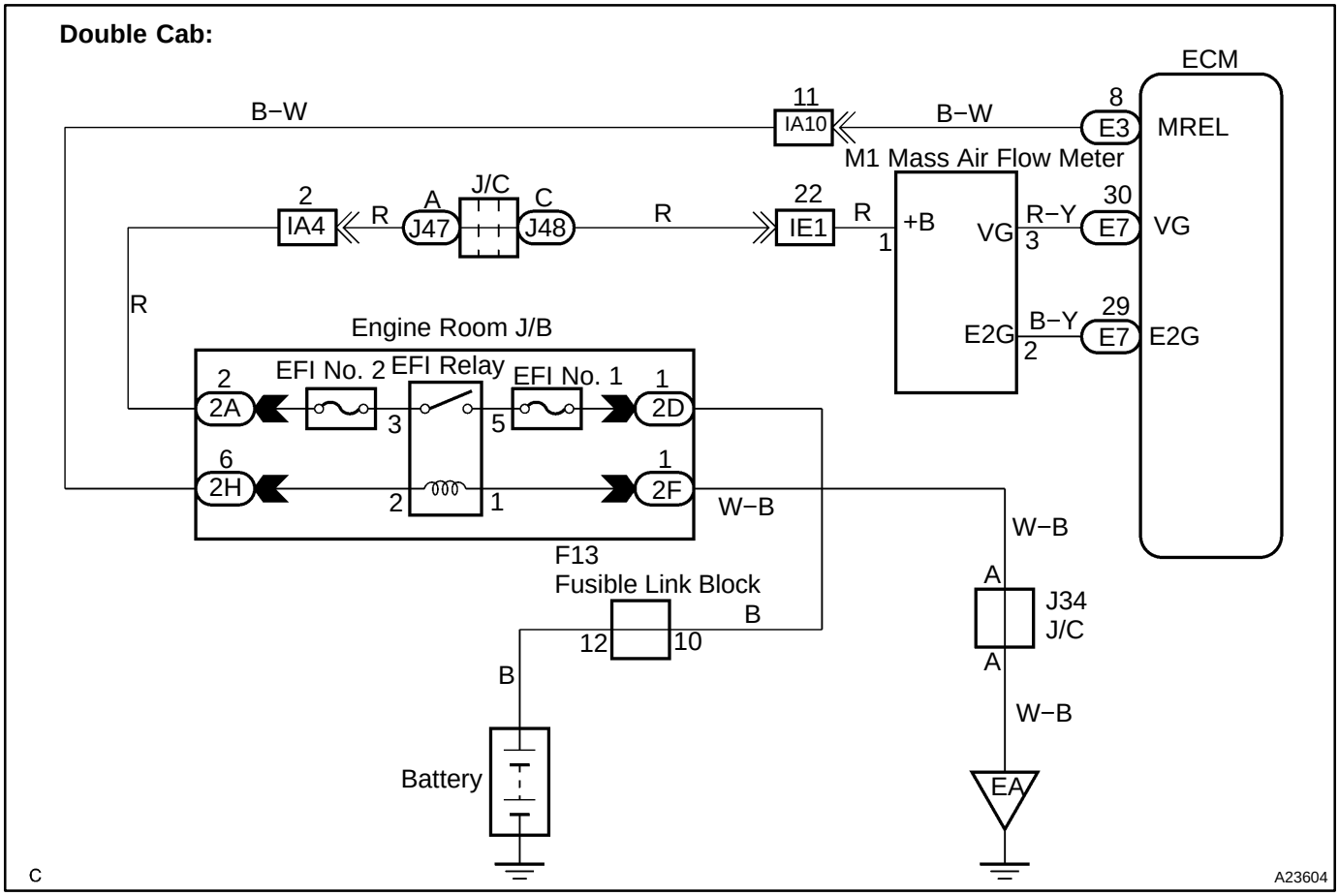
ECM
B−W
11
IA10
B−W
8
E3
MREL
M1 Mass Air Flow Meter
2
IA4
R
A
J47
J/C
C
J48
R
22
IE1
R
1
+B
VG
R−Y
3
30
E7
VG
R
Engine Room J/B
E2G
B−Y
2
29
E7
E2G
2
2A
EFI No. 2
EFI Relay
EFI No. 1
1
2D
3
5
6
2H
1
2F
2
1
W−B
W−B
F13
Fusible Link Block
A
J34
J/C
A
B
12
10
B
W−B
Battery
EA
C
A23604

INSPECTION PROCEDURE

HINT:

Read freeze frame data using the hand−held tester. Freeze frame data records the engine conditions when a malfunction is detected. When troubleshooting, freeze frame data can help determine if the vehicle was running or stopped, if the engine was warmed up or not, if the air−fuel ratio was lean or rich, as well as other data from the time when a malfunction occurred.

1	**Connect hand−held tester, and read value of mass air flow rate.**

PREPARATION:

(a) Connect the hand−held tester to the DLC3.
(b) Turn the ignition switch to ON and push the hand−held tester main switch ON.
(c) Start the engine.
(d) When using hand−held tester, enter the following menu: DIAGNOSIS / ENHANCED OBD II / DATA LIST / ALL / MAF.

CHECK:

Read the mass air flow rate on the hand−held tester.

RESULT:

Air Flow Rate (gm/s)	Proceed to
0.0	A
271.0 or more	B
Between 1 and 270.0 (*1)	C

*1: The value must change when the throttle valve is opened or closed.

B	**Go to step 3.**
C	**Check for intermittent problems (See page DI−430).**

A

2	Check voltage of mass air flow meter power source.

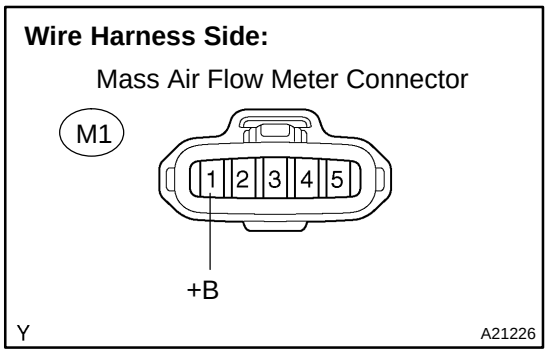

PREPARATION:

(a) Disconnect the M1 mass air flow meter connector.

(b) Turn the ignition switch ON.

CHECK:

Measure voltage between terminal 1 of the mass air flow meter connector and body ground.

OK:

Standard:

Tester Connection	Specified Condition
+B (M1−1) − Body ground	9 to 14 V

NG → **Go to step 5.**

OK

3	Check voltage between terminal VG of ECM connector and body ground.

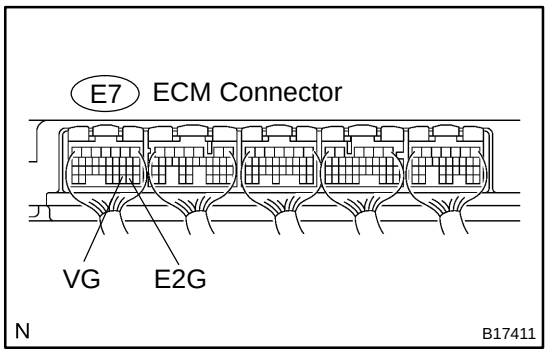

PREPARATION:

Start the engine.

CHECK:

Measure the voltage between the specified terminal of the E7 ECM connector.

HINT:

The shift position should be P or N and the A/C switch should be turned OFF.

OK:

Standard:

Tester Connection	Condition	Specified Condition
VG (E7−30) − E2G (E7−29)	Engine is idling	0.5 to 3.0 V

OK → **Replace ECM (See page SF−82).**

NG

4	**Check for open and short in harness and connector between mass air flow meter and ECM.**

Wire Harness Side:

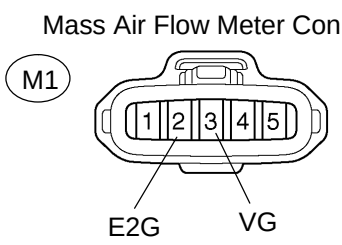

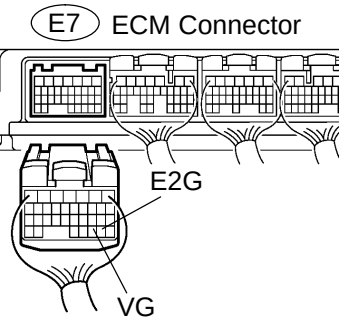

PREPARATION:

(a) Disconnect the M1 mass air flow meter connector.

(b) Disconnect the E7 ECM connector.

CHECK:

Check the resistance between the wire harness side connectors.

OK:

Standard:

Tester Connection	Specified Condition
VG (M1−3) − VG (E7−30)	Below 1 Ω
E2G (M1−2) − E2G (E7−29)	Below 1 Ω
VG (M1−3) or VG (E7−30) − Body ground	10 kΩ or higher

NG → **Repair or replace harness or connector.**

OK

Replace mass air flow meter.

5	**Check for open and short in harness and connector between mass air flow meter and EFI relay.**

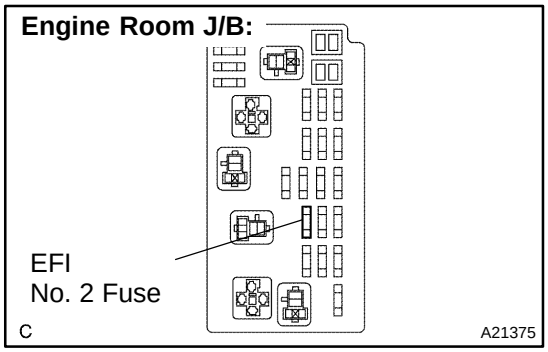

PREPARATION:

Remove the EFI No. 2 fuse from the engine room J/B.

CHECK:

Check the resistance in the EFI No. 2 fuse.

OK:

Standard:

Below 1 Ω

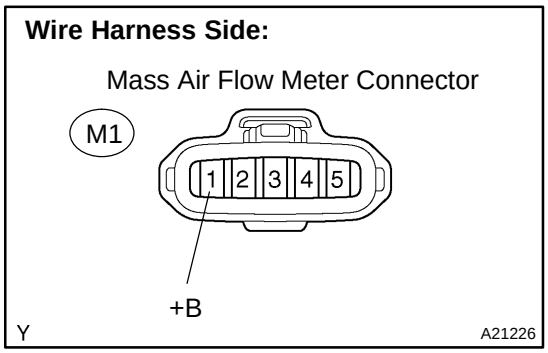

PREPARATION:

(a) Install the EFI No. 2 fuse.

(b) Disconnect the M1 mass air flow meter connector.

(c) Remove the EFI relay from the engine room J/B.

CHECK:

Check the resistance between the wire harness side connectors.

OK:

Standard:

Tester Connection	Specified Condition
+B (M1−1) − Engine Room J/B (EFI relay terminal 1)	Below 1 Ω
+B (M1−1) or Engine room J/B (EFI relay terminal 1) − Body ground	10 kΩ or higher

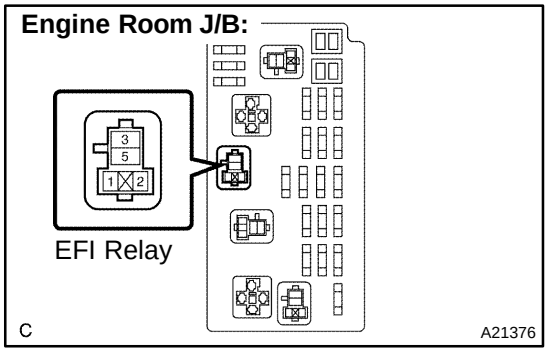

NG → **Repair or replace harness or connector.**

OK

Check ECM power source circuit (See page DI−918).

6	Check continuity between terminal E2G of ECM connector and body ground.

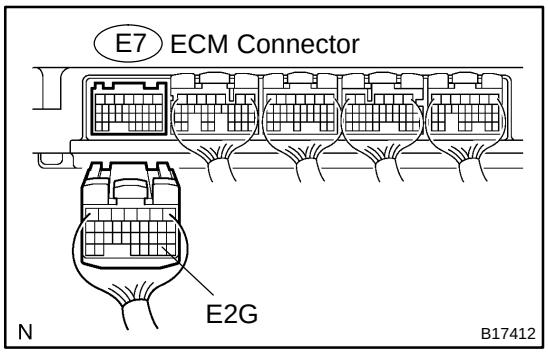

CHECK:

Check the resistance between terminal of the E7 ECM connector and body ground.

OK:

Standard:

Tester Connection	Specified Condition
E2G (E7−29) − Body ground	Below 1 Ω

NG → **Replace ECM (See page SF−82).**

OK

7	Check for open in harness and connector between mass air flow meter and ECM.

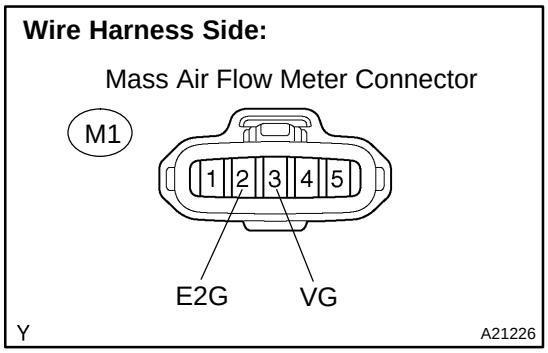

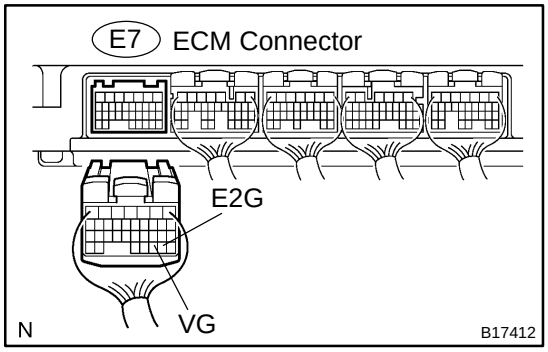

PREPARATION:

(a) Disconnect the M1 mass air flow meter connector.

(b) Disconnect the E7 ECM connector.

CHECK:

Check the resistance between the wire harness side connectors.

OK:

Standard:

Tester Connection	Specified Condition
VG (M1−3) − VG (E7−30)	Below 1 Ω
E2G (M1−2) − E2G (E7−29)	Below 1 Ω
VG (M1−3) or VG (E7−30) − Body ground	10 kΩ or higher
E2G (M1−2) or E2G (E7−29) − Body ground	10 kΩ or higher

NG → **Repair or replace harness or connector.**

OK

Replace mass air flow meter.

DIA80−03

DTC	P0110	Intake Air Temperature Circuit

DTC	P0112	Intake Air Temperature Circuit Low Input

DTC	P0113	Intake Air Temperature Circuit High Input

CIRCUIT DESCRIPTION

(Fig.1)

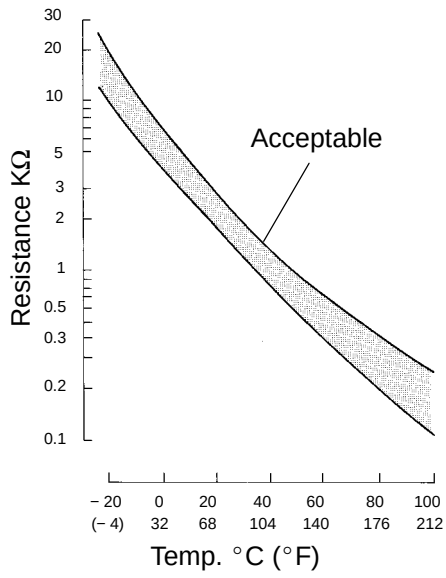

The intake air temperature (IAT) sensor, mounted on the mass air flow (MAF) meter, monitors the intake air temperature. The IAT sensor has a thermistor that varies its resistance depending on the temperature of the intake air. When the air temperature is low, the resistance in the thermistor increases. When the temperature is high, the resistance drops. The resistance varies as voltage changes to the ECM terminal.
(See Fig. 1).
The intake air temperature sensor is connected to the ECM (See below). The 5 V power source voltage in the ECM is applied to the intake air temperature sensor from terminal THA (THAR) via resistor R.
That is, the resistor R and the intake air temperature sensor are connected in series. When the resistance value of the intake air temperature sensor changes in accordance with changes in the intake air temperature, the voltage at terminal THA (THAR) also changes. Based on this signal, the ECM increases the fuel injection volume to improve the driveability during cold engine operation.

DTC No.	Proceed to	DTC Detection Condition	Trouble Area
P0110	Step 1	Open or short in intake air temperature sensor circuit for 0.5 sec.	• Open or short in intake air temperature sensor circuit • Intake air temperature sensor (built in mass air flow meter) • ECM
P0112	Step 4	Short in intake air temperature sensor circuit for 0.5 sec.	
P0113	Step 2	Open in intake air temperature sensor circuit for 0.5 sec.	

HINT:
After confirming DTC ”P0110, P0112 or P0113”, use the hand−held tester to confirm the intake air temperature in the ”DIAGNOSIS / ENHANCED OBD II / DATA LIST / ALL”.

Temperature Displayed	Malfunction
−40˚C (−40˚F)	Open circuit
140˚C (284˚F) or more	Short circuit

MONITOR DESCRIPTION

The ECM monitors the sensor voltage and uses this value to calculate the intake air temperature. When the sensor output voltage deviates from the normal operating range, the ECM interprets this as a fault in the IAT (Intake Air Temperature) sensor and sets a DTC.
Example:
When the sensor voltage output is equal to −40°C (−40°F), or more than 140°C (284°F).

MONITOR STRATEGY

Related DTCs	P0110	Intake air temperature sensor range check (Fluttering)
	P0112	Intake air temperature sensor range check (Low voltage)
	P0113	Intake air temperature sensor range check (High voltage)
Required sensors/components	Intake air temperature sensor	
Frequency of operation	Continuous	
Duration	0.5 sec.	
MIL operation	Immediate	
Sequence of operation	None	

TYPICAL ENABLING CONDITIONS

The monitor will run whenever this DTC is not present	See page DI−437
The typical enabling condition is not available	−

TYPICAL MALFUNCTION THRESHOLDS

Detection Criteria	Threshold
P0110:	
Intake air temperature sensor voltage (Intake air temperature)	Less than 0.18 V or more than 4.91 V (More than 140°C (284°F), or less than −40°C (−40°F))
P0112:	
Intake air temperature sensor voltage (Intake air temperature)	Less than 0.18 V (More than 140°C (284°F))
P0113:	
Intake air temperature sensor voltage (Intake air temperature)	More than 4.91 V (Less than −40°C (−40°F))

COMPONENT OPERATING RANGE

Parameter	Standard Value
Intake air temperature sensor voltage	0.18 V (140°C (284°F)) to 4.91 V (−40°C (−40°F))

WIRING DIAGRAM

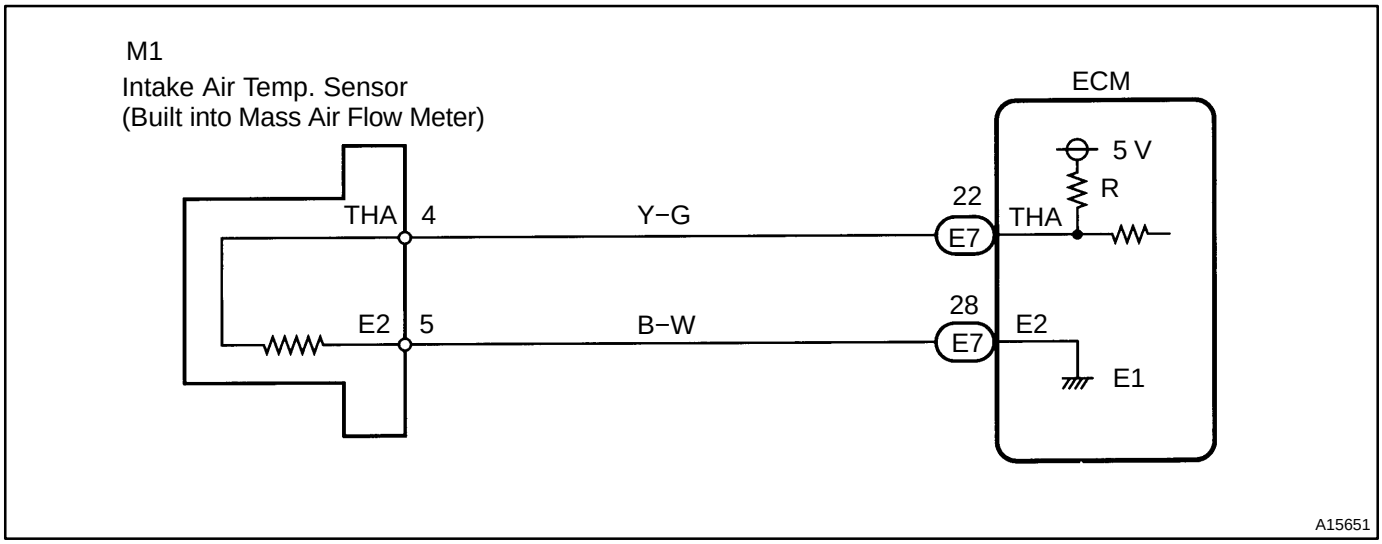

INSPECTION PROCEDURE

HINT:

- If DTCs related to different systems that have terminal E2 as the ground terminal are output simultaneously, terminal E2 may have an open circuit.
- Read freeze frame data using the hand−held tester. Freeze frame data records the engine conditions when a malfunction is detected. When troubleshooting, freeze frame data can help determine if the vehicle was running or stopped, if the engine was warmed up or not, if the air−fuel ratio was lean or rich, as well as other data from the time when a malfunction occurred.

1	**Connect hand−held tester, and read value of intake air temperature.**

PREPARATION:

(a) Connect the hand−held tester to the DLC3.
(b) Turn the ignition switch ON and push the hand−held tester main switch ON.
(c) When using hand−held tester, enter the following menu: DIAGNOSIS / ENHANCED OBD II / DATA LIST / ALL / INTAKE AIR.

CHECK:

Read the temperature value on the hand−held tester.

OK:

Same as actual intake air temperature.

RESULT:

Displayed Temperature	Proceed to
−40°C (−40°F)	A
140°C (284°F) or more	B
OK (Same as present temperature)	C

HINT:

- If there is an open circuit, the hand−held tester indicates −40°C (−40°F).
- If there is a short circuit, the hand−held tester indicates 140°C (284°F) or more.

B	**Go to step 4.**
C	**Check for intermittent problems (See page DI−430).**

A

2	Check for open in harness or ECM.

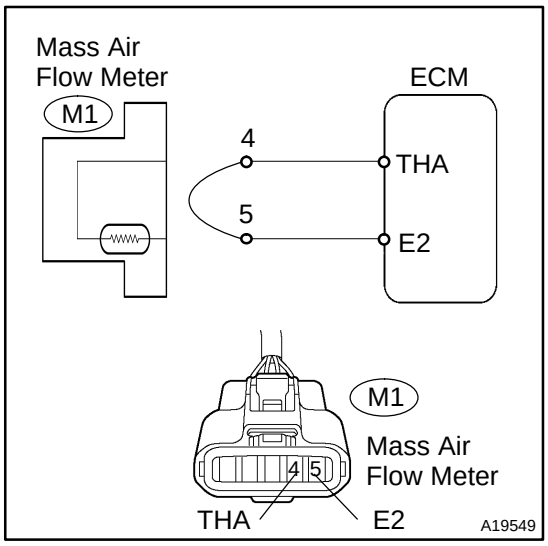

PREPARATION:

(a) Disconnect the M1 mass air flow meter connector.
(b) Connect terminals 4 and 5 of the mass air flow meter wire harness side connector.
(c) Turn the ignition switch ON.
(d) When using hand−held tester, enter the following menu: DIAGNOSIS / ENHANCED OBD II / DATA LIST / ALL / INTAKE AIR.

CHECK:

Read the temperature value on the hand−held tester.

OK:

Standard: Temperature value: 140°C (284°F) or more

OK	Confirm good connection at sensor. If OK, replace mass air flow meter.

NG

3	Check for open in harness or ECM.

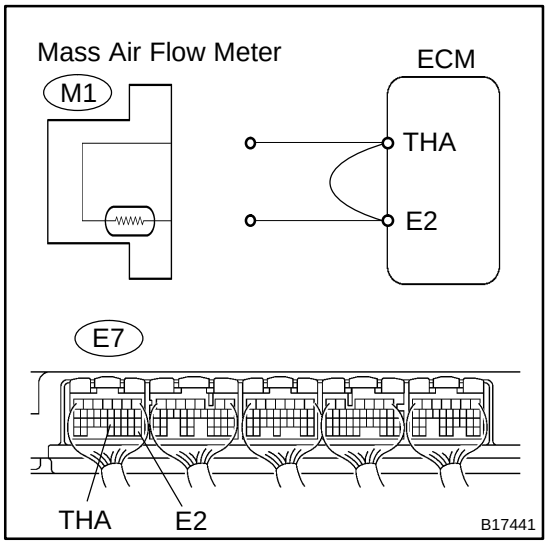

PREPARATION:

(a) Connect terminals THA and E2 of the E7 ECM connector.

HINT:

Before checking, do a visual and contact pressure check for the ECM connector.

(b) Turn the ignition switch ON.
(c) When using hand−held tester, enter the following menu: DIAGNOSIS / ENHANCED OBD II / DATA LIST / ALL / INTAKE AIR.

CHECK:

Read the temperature value on the hand−held tester.

OK:

Standard: Temperature value: 140°C (284°F) or more

OK	Repair or replace harness or connector.

NG

Confirm good connection at ECM. If OK, replace ECM (See page SF−82).

4	Check for short in harness and ECM.

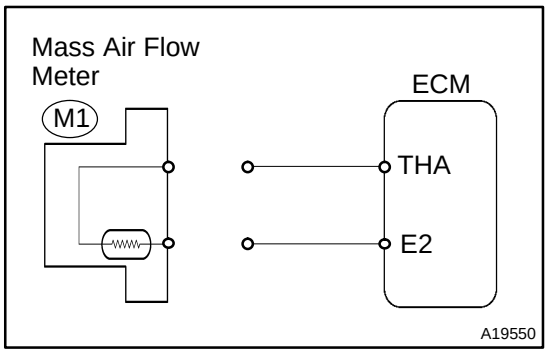

PREPARATION:

(a) Disconnect the M1 mass air flow meter connector.
(b) Turn the ignition switch ON.
(c) When using hand−held tester, enter the following menu: DIAGNOSIS / ENHANCED OBD II / DATA LIST / ALL / INTAKE AIR.

CHECK:

Read the temperature value on the hand−held tester.

OK:

Standard: Temperature value: −40°C (−40°F)

OK	Replace mass air flow meter.

NG

5	Check for short in harness or ECM.

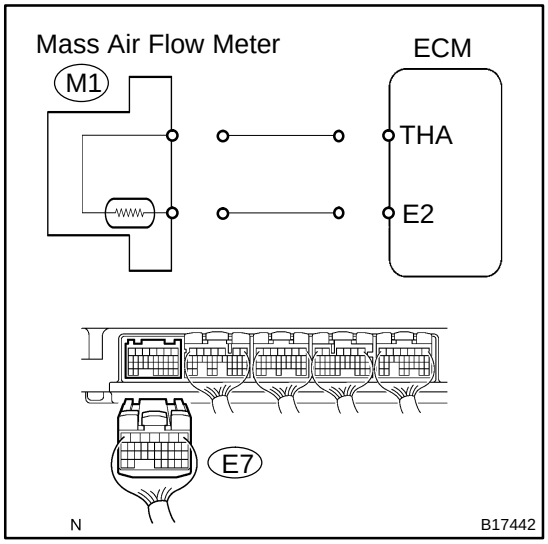

PREPARATION:

(a) Disconnect the E7 ECM connector.
(b) Turn the ignition switch ON.
(c) When using hand−held tester, enter the following menu: DIAGNOSIS / ENHANCED OBD II / DATA LIST / ALL / INTAKE AIR.

CHECK:

Read the temperature value on the hand−held tester.

OK:

Standard: Temperature value: −40°C (−40°F)

OK	Repair or replace harness or connector.

NG

Replace ECM (See page SF−82).

DIA81−03

DTC	P0115	Engine Coolant Temperature Circuit

DTC	P0117	Engine Coolant Temperature Circuit Low Input

DTC	P0118	Engine Coolant Temperature Circuit High Input

CIRCUIT DESCRIPTION

A thermistor is built in the Engine Coolant Temperature (ECT) sensor and changes the voltage value according to the engine coolant temperature.
The structure of the sensor and connection to the ECM is the same as the Intake Air Temperature (IAT) sensor.
HINT:
If the ECM detects the DTC ”P0115, P0117 or P0118”, it operates the fail−safe function in which the ECT is assumed to be 80°C (176°F).

DTC No.	Proceed to	DTC Detection Condition	Trouble Area
P0115	Step 1	Open or short in engine coolant temperature sensor circuit for 0.5 sec.	• Open or short in engine coolant temperature sensor circuit • Engine coolant temperature sensor • ECM
P0117	Step 4	Short in engine coolant temperature sensor circuit for 0.5 sec.	
P0118	Step 2	Open in engine coolant temperature sensor circuit for 0.5 sec.	

HINT:
After confirming DTC ”P0115, P0117 or P0118”, use the OBD II scan tool or the hand−held tester to confirm the engine coolant temperature from the DIAGNOSIS / ENHANCED OBD II / DATA LIST / ALL.

Displayed Temperature	Malfunction
−40˚C (−40˚F)	Open circuit
140˚C (284˚F) or more	Short circuit

MONITOR DESCRIPTION

The ECT (Engine Coolant Temperature) sensor is used to monitor the engine coolant temperature. The ECT sensor has a thermistor that varies its voltage depending on the temperature of the engine coolant. When the coolant temperature is low, the resistance in the thermistor increases. When the temperature is high, the voltage drops. The voltage varies as output voltage from the sensor changes.
The ECM monitors the sensor voltage and uses this value to calculate the engine coolant temperature. When the sensor output voltage deviates from the normal operating range, the ECM interprets this as a fault in the ECT sensor and sets a DTC.

Example:
When the ECM calculates that the ECT is less than −40°C (−40°F), or more than 140°C (284°F), and if either the condition continues for 0.5 sec. or more, the ECM will set a DTC.

MONITOR STRATEGY

Related DTCs	P0115	Engine coolant temperature sensor range check (Fluttering)
	P0117	Engine coolant temperature sensor range check (Low voltage)
	P0118	Engine coolant temperature sensor range check (High voltage)
Required sensors/components	Engine coolant temperature sensor	
Frequency of operation	Continuous	
Duration	0.5 sec.	
MIL operation	Immediate	
Sequence of operation	None	

TYPICAL ENABLING CONDITIONS

The monitor will run whenever this DTC is not present	See page DI−437
The typical enabling condition is not available	−

TYPICAL MALFUNCTION THRESHOLDS

Detection Criteria	Threshold
P0115:	
Engine coolant temperature sensor voltage (Coolant temperature)	Less than 0.14 V, or more than 4.91 V (More than 140°C (284°F), or less than −40°C (−40°F))
P0117:	
Engine coolant temperature sensor voltage (Coolant temperature)	Less than 0.14 V (More than 140°C (284°F))
P0118:	
Engine coolant temperature sensor voltage (Coolant temperature)	More than 4.91 V (Less than −40°C (−40°F))

COMPONENT OPERATING RANGE

Parameter	Standard Value
Engine coolant temperature sensor voltage	0.14 V (140°C (284°F)) to 4.91 V (−40°C (−40°F))

WIRING DIAGRAM

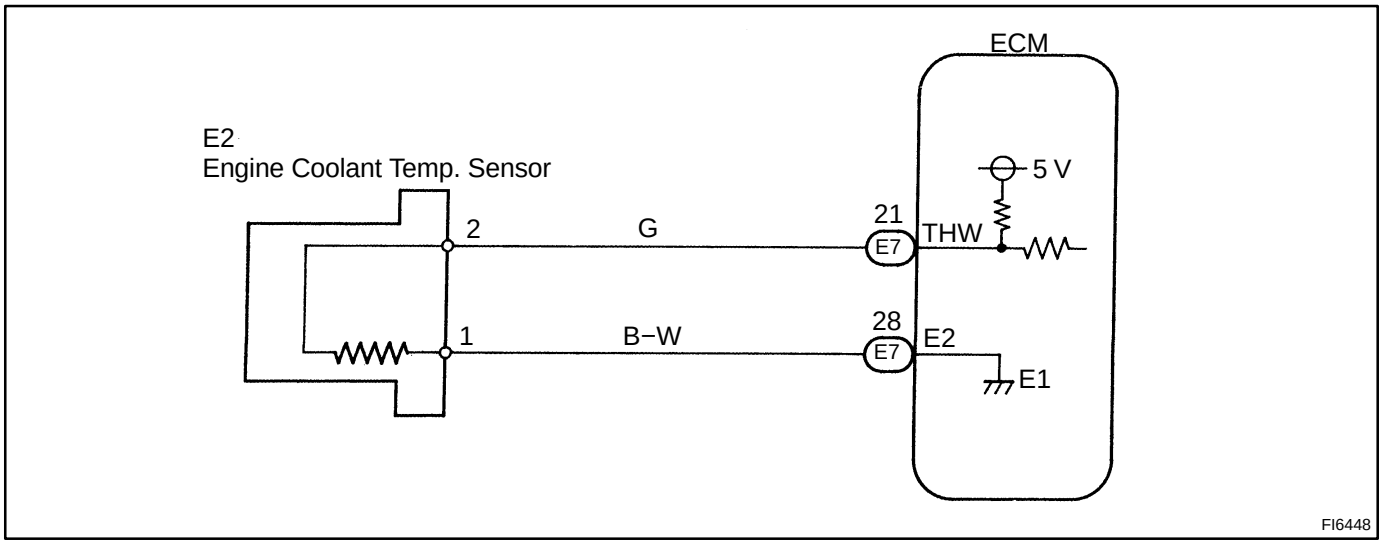

INSPECTION PROCEDURE

HINT:

- If DTCs related to different system that have terminal E2 as the ground terminal are output simultaneously, terminal E2 may have an open circuit.
- Read freeze frame data using the hand−held tester. Freeze frame data records the engine conditions when a malfunction is detected. When troubleshooting, freeze frame data can help determine if the vehicle was running or stopped, if the engine was warmed up or not, if the air−fuel ratio was lean or rich, as well as other data from the time when a malfunction occurred.

1	**Connect hand−held tester, and read value of engine coolant temperature.**

PREPARATION:

(a) Connect the hand−held tester to the DLC3.
(b) Turn the ignition switch ON and push the hand−held tester main switch ON.
(c) When using hand−held tester, enter the following menu: DIAGNOSIS / ENHANCED OBD II / DATA LIST / ALL / COOLANT TEMP.

CHECK:

Read the temperature value on the the hand−held tester.

OK:

Same value as actual engine coolant temperature.

RESULT:

Displayed Temperature	Proceed to
−40°C (−40°F)	A
140°C (284°F) or more	B
OK (Same as present temperature)	C

HINT:

- If there is an open circuit, hand−held tester indicates −40°C (−40°F).
- If there is a short circuit, hand−held tester indicates 140°C (284°F) or more.

B	**Go to step 4.**
C	**Check for intermittent problems (See page DI−430).**

A

2	Check for open in harness or ECM.

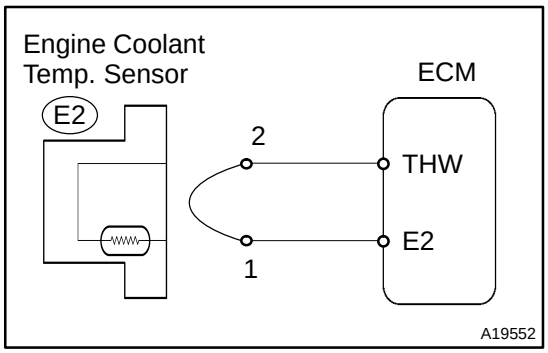

PREPARATION:

(a) Disconnect the E2 engine coolant temperature (ECT) sensor connector.
(b) Connect terminals 1 and 2 of the engine coolant temperature sensor wire harness side connector.
(c) Turn the ignition switch ON.
(d) When using hand−held tester, enter the following menu: DIAGNOSIS / ENHANCED OBD II / DATA LIST / ALL / COOLANT TEMP.

CHECK:

Read the temperature value on the hand−held tester.

OK:

Standard: Temperature value: 140°C (284°F) or more

OK	Confirm good connection at sensor. If OK, replace engine coolant temperature sensor.

NG

3	Check for open in harness or ECM.

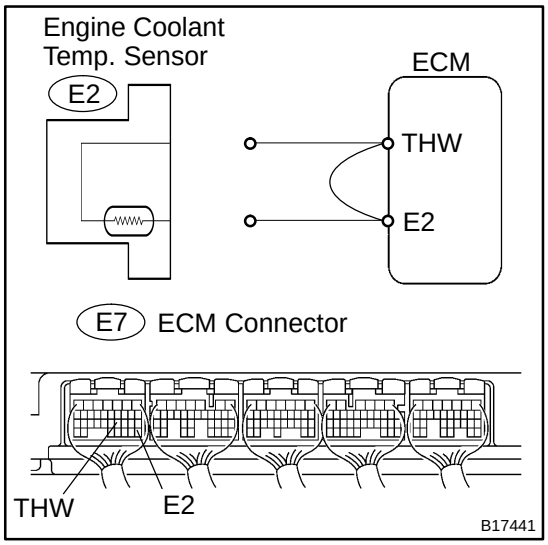

PREPARATION:

(a) Disconnect the E2 engine coolant temperature sensor connector.
(b) Connect terminals THW and E2 of the E7 ECM connector.

HINT:

Before checking, do a visual and contact pressure checks for the ECM connector.

(c) Turn the ignition switch ON.
(d) When using hand−held tester, enter the following menu: DIAGNOSIS / ENHANCED OBD II / DATA LIST / ALL / COOLANT TEMP.

CHECK:

Read the temperature value on the OBD II scan tool or the hand−held tester.

OK:

Standard: Temperature value: 140°C (284°F) or more

OK	Repair or replace harness or connector.

NG

Confirm good connection at ECM. If OK, replace ECM (See page SF−82).

4	Check for short in harness and ECM.

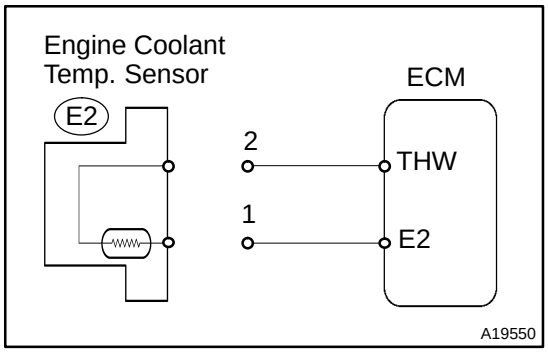

PREPARATION:

(a) Disconnect the E2 engine coolant temperature sensor connector.
(b) Turn the ignition switch ON.
(c) When using hand−held tester, enter the following menu: DIAGNOSIS / ENHANCED OBD II / DATA LIST / ALL / COOLANT TEMP.

CHECK:

Read the temperature value on the hand−held tester.

OK:

Standard: Temperature value: −40°C (−40°F)

OK → **Replace engine coolant temperature sensor.**

NG

5	Check for short in harness or ECM.

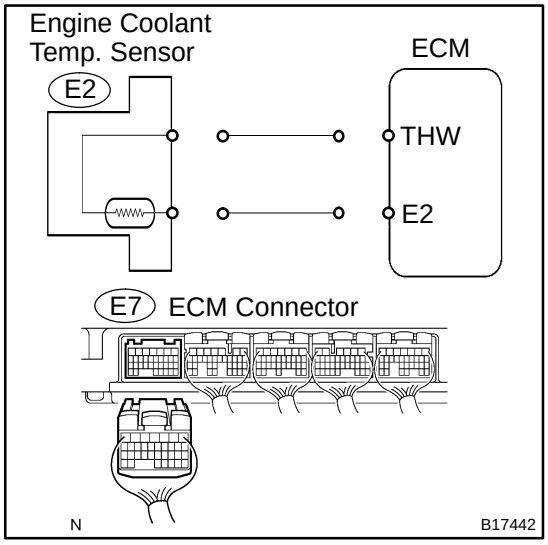

PREPARATION:

(a) Disconnect the E7 ECM connector.
(b) Turn the ignition switch ON.
(c) When using hand−held tester, enter the following menu: DIAGNOSIS / ENHANCED OBD II / DATA LIST / ALL / COOLANT TEMP.

CHECK:

Read the temperature value on the hand−held tester.

OK:

Standard: Temperature value: −40°C (−40°F)

OK → **Repair or replace harness or connector.**

NG

Replace ECM (See page SF−82).

DIDRD−01

DTC	P0120	Throttle/Pedal Position Sensor/Switch ”A” Circuit

DTC	P0122	Throttle/Pedal Position Sensor/Switch ”A” Circuit Low Input

DTC	P0123	Throttle/Pedal Position Sensor/Switch ”A” Circuit High Input

DTC	P0220	Throttle/Pedal Position Sensor/Switch ”B” Circuit

DTC	P0222	Throttle/Pedal Position Sensor/Switch ”B” Circuit Low Input

DTC	P0223	Throttle/Pedal Position Sensor/Switch ”B” Circuit High Input

DTC	P2135	Throttle/Pedal Position Sensor/Switch ”A”/”B” Voltage Correction

HINT:
This is the purpose for the ”throttle position sensor”.

CIRCUIT DESCRIPTION

HINT:

- This Electrical Throttle Control System (ETCS) does not use a throttle cable.
- This throttle position sensor is a non−contact type.

The throttle position sensor is mounted on the throttle body. It detects the opening angle of the throttle valve. This sensor is electronically controlled and uses Hall−effect elements, so that accurate control and reliability can be obtained. The throttle position sensor has 2 sensor elements / signal outputs: VTA1 and VTA2. VTA1 used to detect the throttle opening angle and VTA2 is used to detect malfunctions in VTA1. Voltage applied to VTA1 and VTA2 change between 0 V and 5 V in proportion to the opening angle of the throttle valve. There are several checks that the ECM performs to confirm proper operation of the throttle position sensor and VTA1.

The ECM judges the current opening angle of the throttle valve from these signals input from terminals VTA1 and VTA2, and the ECM controls the throttle motor to make the throttle valve angle properly in response to driver inputs.

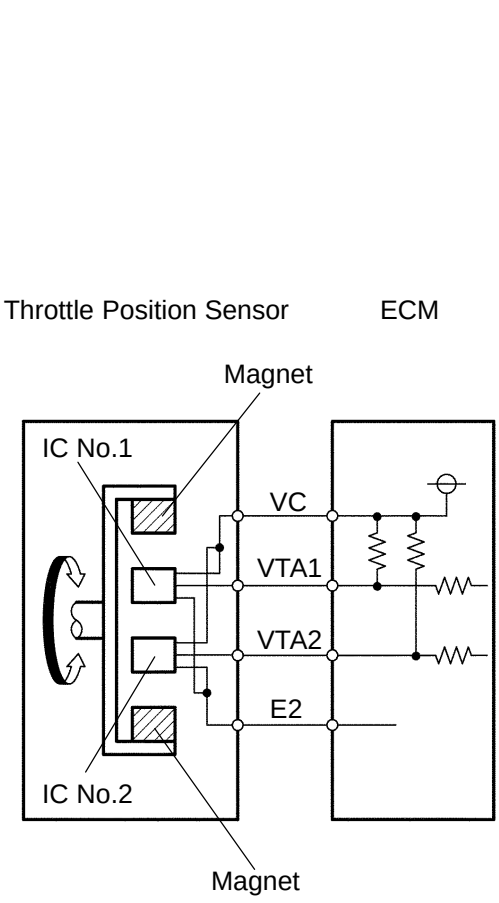

A19755

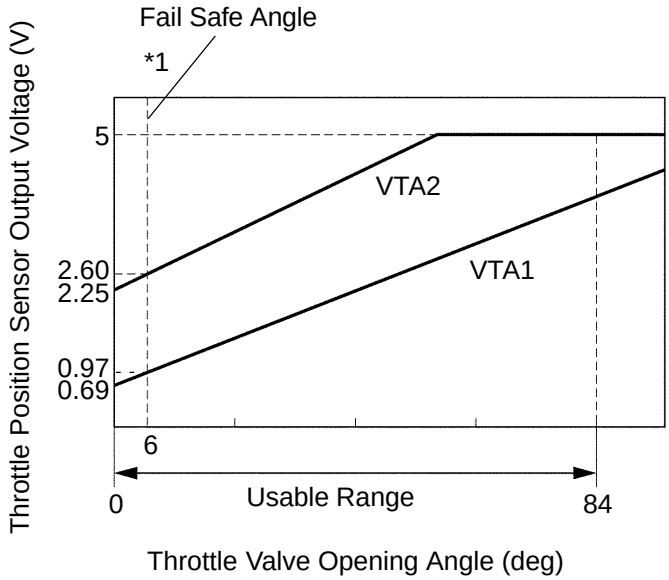

A21037

Throttle Valve Fully Closed
(Throttle Position expressed as percentage
(VTA1) 10 to 20%)

Throttle Valve Fully Opened
(Throttle Position expressed as percentage
(VTA1) 64 to 96%)

*1: Fail Safe Angle 7°
(Throttle Position expressed as percentage
(VTA1) about 10 to 24%)

DTC No.	DTC Detection Condition	Trouble Area
Condition (a) of DTC P0120, P0122, P0123, P0220, P0222 or P0223 continues for 2 sec. (Open or short in the throttle control motor and sensor circuit)		
P0120	Detection conditions for DTCs P0122 and P0123 are not satisfied but condition (a) is satisfied (a) VTA1 is ”0.2 V or less” or VTA1 is ”4.535 V or more”	• Open or short in throttle control motor and sensor circuit • Throttle control motor and sensor • ECM
P0122	(a) VTA1 is 0.2 V or less	• Short in throttle control motor and sensor circuit • Throttle control motor and sensor • Short in VTA1 circuit • Open in VC circuit • ECM
P0123	(a) VTA1 is 4.535 V or more	• Open in throttle control motor and sensor circuit • Throttle control motor and sensor • Open in VTA1 circuit • Open in E2 circuit • VC and VTA1 circuit are short−circuited • ECM
P0220	Detection conditions for DTCs P0222 and P0223 are not satisfied but condition (a) is satisfied (a) VTA2 is ”1.75 V or less” or VTA2 is ”4.8 V or more”	• Throttle control motor and sensor • ECM
P0222	(a) VTA2 is 1.75 V or less	• Throttle control motor and sensor • Short in VTA2 circuit • Open in VC circuit • ECM
P0223	(a) VTA2 is ”4.8 V or more” and VTA1 is ”0.2 V or more” and VTA1 is ”2.02 V or less”	• Throttle control motor and sensor • Open in VTA2 circuit • Open in E2 circuit • VC and VTA2 circuit are short−circuited • ECM
P2135	Condition (a) continues for 0.5 sec. or more, or condition (b) continues for 0.4 sec. or more: (a) Difference between VTA1 and VTA2 is 0.02 V or less (b) VTA1 is ”0.2 V or less” and VTA2 is ”1.75 V or less”	• VTA1 and VTA2 circuit are short−circuited • Throttle control motor and sensor • ECM

HINT:

- After confirming DTCs, use the hand−held tester or the OBD II scan tool to confirm the throttle valve opening percentage and closed throttle position switch condition.
- THROTTLE POS means the VTA1 signal and the THROTTLE POS #2 means the VTA2 signal.
  Reference (Normal condition):

Tester display	Accelerator pedal fully released	Accelerator pedal fully depressed
THROTTLE POS	10 to 24%	66 to 98%
THROTTLE POS #2	2.1 to 3.1 V	4.5 to 5.5 V

MONITOR DESCRIPTION

The ECM uses throttle position sensor to monitor the throttle valve opening angle.

(a) There is an expected specific voltage difference between VTA1 and VTA2 for each throttle opening angle.

- If the difference between VTA1 and VTA2 is incorrect the ECM interprets this as a fault and will set a DTC.

(b) VTA1 and VTA2 each have a specific voltage operating range.

- If VTA1 or VTA2 is out of the normal operating range the ECM interprets this as a fault and will set a DTC.

(c) VTA1 and VTA2 should never be close to the same voltage levels.

- If VTA1 is within the range of ± 0.02 V of VTA2 the ECM interprets this as a short circuit in the throttle position sensor system and will set a DTC.

FAIL SAFE

If the ETCS (Electronic Throttle Control System) has a malfunction, the ECM cuts off current to the throttle control motor. The throttle control valve returns to a predetermined opening angle (approximately 16˚) by the force of the return spring. The ECM then adjusts the engine output by controlling the fuel infection (intermittent fuel−cut) and ignition timing in accordance with the accelerator pedal opening angle to enable the vehicle to continue at a minimum speed.

If the accelerator pedal is depressed firmly and slowly, the vehicle can be driven slowly.

If a ”pass” condition is detected and then the ignition switch is turned OFF, the fail−safe operation will stop and the system will return to normal condition.

MONITOR STRATEGY

Related DTCs	P0120	Throttle position sensor (sensor 1) range check (Fluttering)
	P0122	Throttle position sensor (sensor 1) range check (Low voltage)
	P0123	Throttle position sensor (sensor 1) range check (High voltage)
	P0220	Throttle position sensor (sensor 2) range check (Fluttering)
	P0222	Throttle position sensor (sensor 2) range check (Low voltage)
	P0223	Throttle position sensor (sensor 2) range check (High voltage)
	P2135	Throttle position sensor range check (Correlation)
Required sensors/components	Throttle position sensor	
Frequency of operation	Continuous	
Duration	Accelerator pedal ON: 2 sec. Accelerator pedal OFF: 10 sec. P2135: 0.5 sec. or 0.4 sec.	
MIL operation	Immediate	
Sequence of operation	None	

TYPICAL ENABLING CONDITIONS

The monitor will run whenever this DTC is not present	See page DI−437
Electronic throttle actuator power	ON

TYPICAL MALFUNCTION THRESHOLDS

Detection Criteria	Threshold
P0120:	
VTA1 voltage	0.2 V or less, or 4.535 V or more
P0122:	
VTA1 voltage	0.2 V or less
P0123:	
VTA1 voltage	4.535 V or more
P0220:	
VTA2 voltage	1.75 V or less, or 4.8 V or more
P0222:	
VTA2 voltage	1.75 V or less
P0223:	
Both of the following conditions are met:	Condition 1 and 2
1. VTA1 voltage	0.2 to 2.02 V
2. VTA2 voltage	4.8 V or more
P2135:	
Different between VTA1 and VTA2 voltage	0.02 V or less
Both of the following conditions are met:	Condition 1 and 2
1. VTA1 voltage	0.2 V or less
2. VTA2 voltage	1.75 V or less

COMPONENT OPERATING RANGE

Parameter	Standard Value
Throttle position sensor VTA1 voltage	0.6 to 3.96 V
Throttle position sensor VTA2 voltage	2.25 to 5.0 V

WIRING DIAGRAM

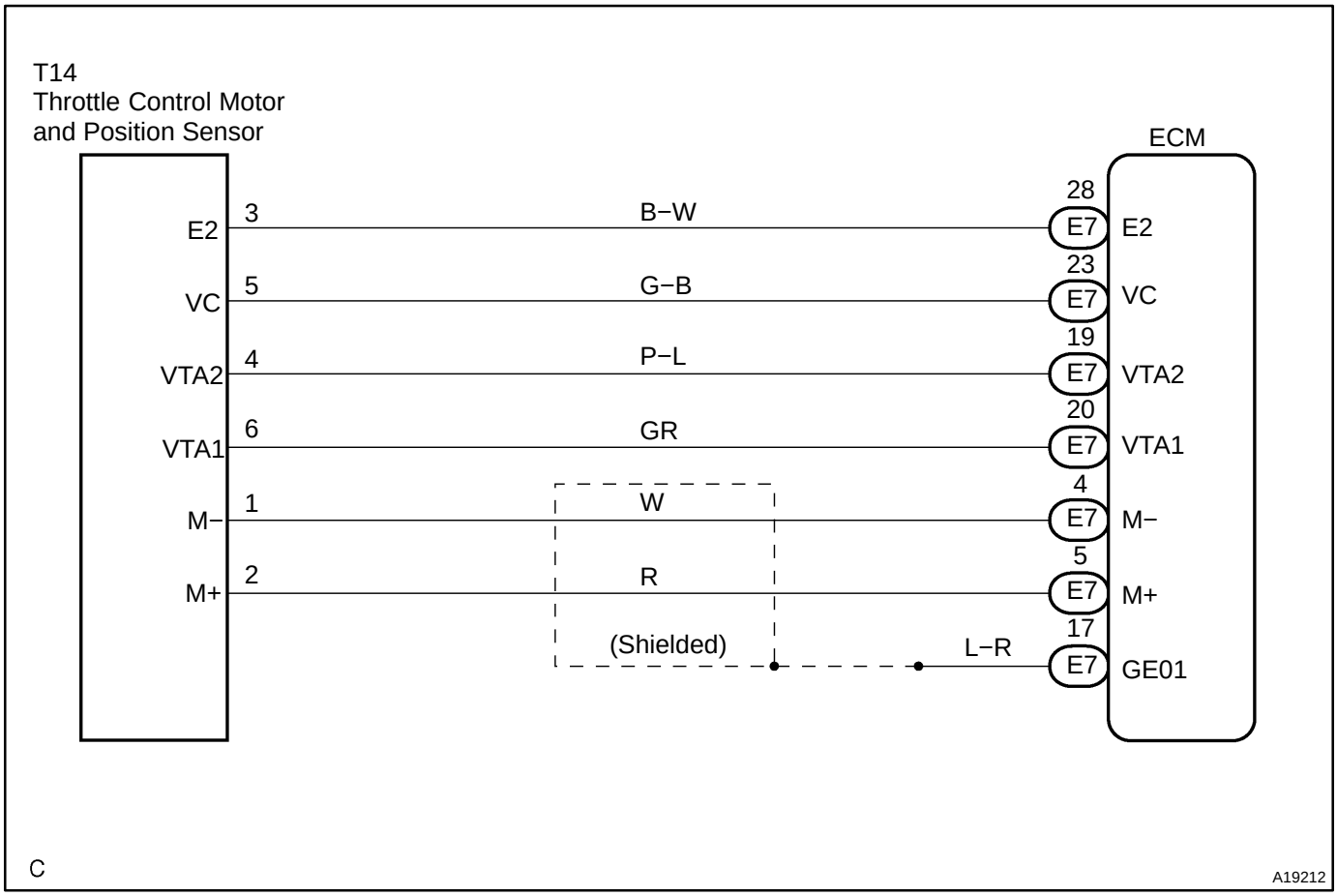

INSPECTION PROCEDURE

HINT:

- If DTCs related to different system that have terminal E2 as the ground terminal are output simultaneously, terminal E2 may have an open circuit.
- Read freeze frame data using the hand−held tester. Freeze frame data records the engine conditions when a malfunction is detected. When troubleshooting, freeze frame data can help determine if the vehicle was running or stopped, if the engine was warmed up or not, if the air−fuel ratio was lean or rich, as well as other data from the time when a malfunction occurred.

1	**Connect hand−held tester, and read the voltage for throttle position sensor data.**

PREPARATION:

(a) Enter the following menu: DIAGNOSIS / ENHANCED OBD II / DATA LIST / ALL / THROTTLE POS and THROTTLE POS #2.

CHECK:

Read voltage value displayed on the hand−held tester.

OK:

RESULT:

Throttle position expressed as percentage and voltage				Trouble area	Proceed to
Accelerator pedal released		Accelerator pedal depressed			
THROTTLE POS (VTA1)	THROTTLE POS #2 (VTA2)	THROTTLE POS (VTA1)	THROTTLE POS #2 (VTA2)		
0 %	0 to 0.2 V	0 %	0 to 0.2 V	VC circuit open	A
100 %	4.5 to 5.5 V	100 %	4.5 to 5.5 V	E2 circuit open	
0 % or 100 %	2.1 to 3.1 V (Fail safe)	0 % or 100 %	2.1 to 3.1 V (Fail safe)	VTA1 circuit open or ground short	
about 16 % (Fail safe)	0 to 0.2 or 4.5 to 5.5 V	about 16 % (Fail safe)	0 to 0.2 or 4.5 to 5.5 V	VTA2 circuit open or ground short	
10 to 24 %	2.15 to 3.05 V	64 to 96 % (Does not fail safe)	4.5 to 5.5 V (Does not fail safe)	Throttle position sensor circuit is normal	B

B	**Go to step 5.**

A

2	**Check for open and short in harness and connector between ECM and throttle position sensor.**

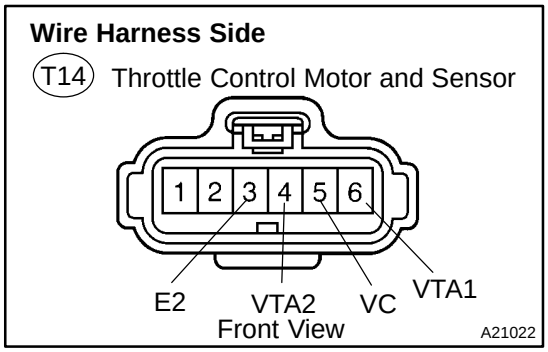

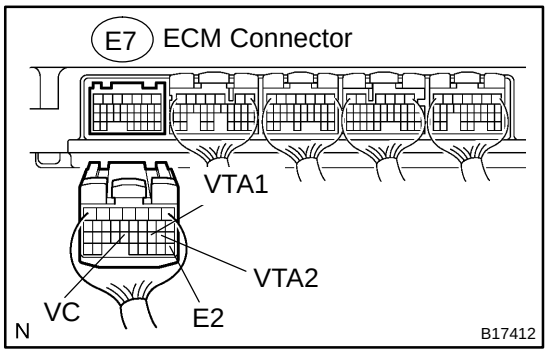

PREPARATION:

(a) Disconnect the T14 throttle control motor and sensor connector.

(b) Disconnect the E7 ECM connector.

CHECK:

Check the resistance between the wire harness side connectors.

OK:

Standard:

Tester Connection	Specified Condition
VC (T14−5) − VC (E7−23)	Below 1 Ω
VTA1 (T14−6) − VTA1 (E7−20)	Below 1 Ω
VTA2 (T14−4) − VTA2 (E7−19)	Below 1 Ω
E2 (T14−3) − E2 (E7−28)	Below 1 Ω
VC (T14−5) or VC (E7−23) − Body ground	10 kΩ or higher
VTA1 (T14−6) or VTA1 (E7−20) − Body ground	10 kΩ or higher
VTA2 (T14−4) or VTA2 (E7−19) − Body ground	10 kΩ or higher

NG → **Repair or replace harness or connector.**

OK

3	Check voltage between terminals VC and E2 of ECM connector.

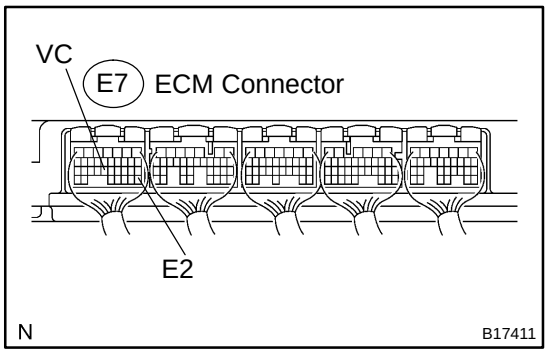

PREPARATION:

(a) Disconnect the T14 throttle control motor and sensor connector.

(b) Turn the ignition switch ON.

CHECK:

Measure the voltage between the specified terminals of the E7 ECM connector.

OK:

Standard:

Tester Connection	Specified Condition
VC (E7−23) − E2 (E7−28)	4.5 to 5.5 V

NG → **Replace ECM (See page SF−82).**

OK

4	Replace throttle body (See page SF−43).

Go

5	Check if DTC output recur.

PREPARATION:

(a) Clear DTCs (see page DI−462).

(b) Start the engine.

(c) Run the engine at idle for 15 seconds or more.

CHECK:

Read the DTC.

RESULT:

Display (DTC Output)	Proceed to
”P0120, P0122, P0123, P0220, P0222, P0223 and/or P2135” are output again	A
No DTC output	B

B → **System is OK.**

A

Replace ECM (See page SF−82).

DTC	P0136	Oxygen Sensor Circuit Malfunction (Bank 1 Sensor 2)

DTC	P0137	Oxygen Sensor Circuit Low Voltage (Bank 1 Sensor 2)

DTC	P0138	Oxygen Sensor Circuit High Voltage (Bank 1 Sensor 2)

DTC	P0156	Oxygen Sensor Circuit Malfunction (Bank 2 Sensor 2)

DTC	P0157	Oxygen Sensor Circuit Low Voltage (Bank 2 Sensor 2)

DTC	P0158	Oxygen Sensor Circuit High Voltage (Bank 2 Sensor 2)

HINT:
Sensor 2 refers to the sensor mounted behind the Three−Way Catalytic Converter (TWC) and located far from the engine assembly.

CIRCUIT DESCRIPTION

In order to obtain a high purification rate of the carbon monoxide (CO), hydrocarbon (HC) and nitrogen oxide (NOx) components in the exhaust gas, a TWC is used. For the most efficient use of the TWC, the air−fuel ratio must be precisely controlled so that it is always close to the stoichiometric air−fuel level. For the purpose of helping the ECM to deliver accurate air−fuel ratio control, a Heated Oxygen (HO2) sensor is used.
The HO2 sensor is located behind the TWC, and detects the oxygen concentration in the exhaust gas. Since the sensor is integrated with the heater that heats the sensing portion, it is possible to detect the oxygen concentration even when the intake air volume is low (the exhaust gas temperature is low).
When the air−fuel ratio becomes lean, the oxygen concentration in the exhaust gas is rich. The HO2 sensor informs the ECM that the post−TWC air−fuel ratio is lean (low voltage, i.e. less than 0.45 V).
Conversely, when the air−fuel ratio is richer than the stoichiometric air−fuel level, the oxygen concentration in the exhaust gas becomes lean. The HO2 sensor informs the ECM that the post−TWC air−fuel ratio is rich (high voltage, i.e. more than 0.45 V). The HO2 sensor has the property of changing its output voltage drastically when the air−fuel ratio is close to the stoichiometric level.
The ECM uses the supplementary information from the HO2 sensor to determine whether the air−fuel ratio after the TWC is rich or lean, and adjusts the fuel injection time accordingly. Thus, if the HO2 sensor is working improperly due to internal malfunctions, the ECM is unable to compensate for deviations in the primary air−fuel ratio control.

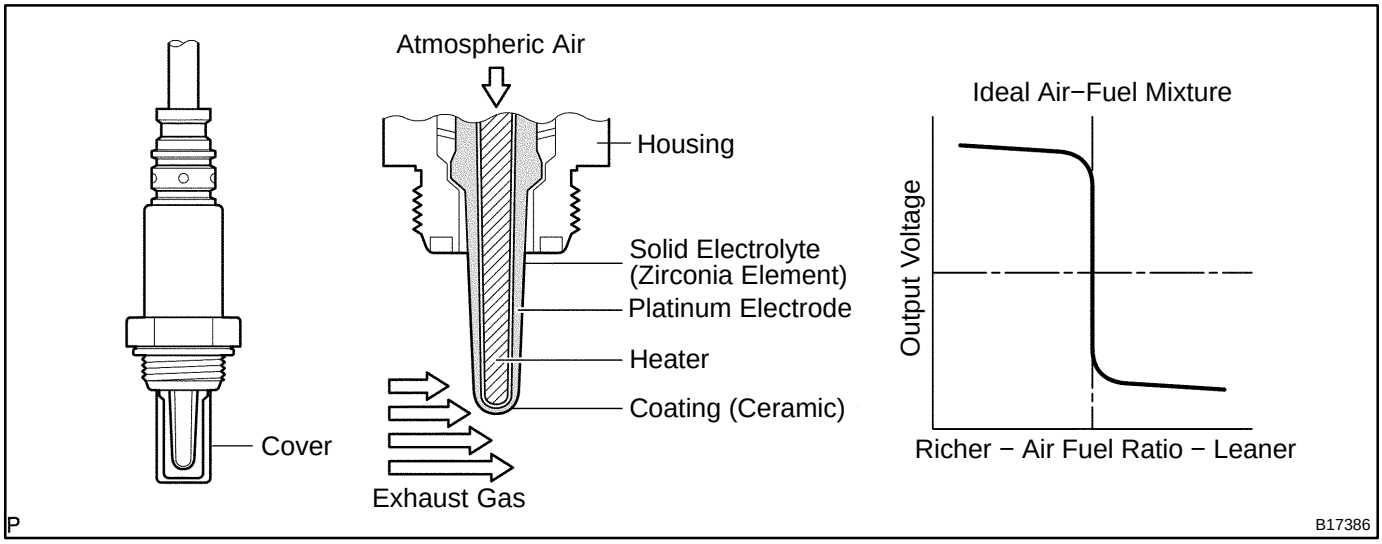

DTC No.	DTC Detecting Condition	Trouble Area
P0136 P0156	During active air−fuel ratio control, following conditions (a) and (b) met for certain period of time (2 trip detection logic): (a) Heated Oxygen (HO2) sensor voltage does not decrease to less than 0.2 V (b) HO2 sensor voltage does not increase to more than 0.6 V	• Open or short in HO2 sensor (sensor 2) circuit • HO2 sensor (sensor 2) • HO2 sensor heater (sensor 2) • Air−Fuel Ratio (A/F) sensor (sensor 1) • EFI relay • Gas leakage from exhaust system
P0136 P0156	Sensor impedance less than 5 Ω for more than 30 seconds when ECM presumes sensor to being warmed up and operating normally (1 trip detection logic)	
P0137 P0157	During active air−fuel ratio control, following conditions (a) and (b) met for certain period of time (2 trip detection logic): (a) HO2 sensor voltage output less than 0.21 V (b) Target air−fuel ratio rich	• Open in HO2 sensor (sensor 2) circuit • HO2 sensor (sensor 2) • HO2 sensor heater (sensor 2) • EFI relay • Gas leakage from exhaust system
P0137 P0157	High impedance: Sensor impedance 348.1 MΩ or more for more than 90 seconds when ECM presumes sensor to being warmed up and operating normally (1 trip detection logic)	
P0138 P0158	During active air−fuel ratio control, following conditions (a) and (b) met for certain period of time (2 trip detection logic): (a) HO2 sensor voltage output 0.59 V or more (b) Target air−fuel ratio lean	• Short in HO2 sensor (sensor 2) circuit • HO2 sensor (sensor 2) • ECM internal circuit malfunction
P0138 P0158	HO2 sensor voltage output exceeds 1.2 V for more than 30 seconds (1 trip detection logic)	

MONITOR DESCRIPTION

Active Air−Fuel Ratio Control

The ECM usually performs air−fuel ratio feedback control so that the Air−Fuel Ratio (A/F) sensor output indicates a near stoichiometric air−fuel level. This vehicle includes active air−fuel ratio control in addition to regular air−fuel ratio control. The ECM performs active air−fuel ratio control to detect any deterioration in the Three−Way Catalytic Converter (TWC) and Heated Oxygen (HO2) sensor malfunctions (refer to the diagram below).

Active air−fuel ratio control is performed for approximately 15 to 20 seconds while driving with a warm engine. During active air−fuel ratio control, the air−fuel ratio is forcibly regulated to become lean or rich by the ECM. If the ECM detects a malfunction, one of the following DTCs is set: DTC P0136, P0156 (abnormal voltage output), P0137, P0157 (open circuit) and P0138, P0158 (short circuit).

Abnormal Voltage Output of HO2 Sensor (DTC P0136, P0156)

While the ECM is performing active air−fuel ratio control, the air−fuel ratio is forcibly regulated to become rich or lean. If the sensor is not functioning properly, the voltage output variation is small. For example, when the HO2 sensor voltage does not decrease to less than 0.21 V and does not increase to more than 0.59 V during active air−fuel ratio control, the ECM determines that the sensor voltage output is abnormal and sets DTC P0136.

HO2 SENSOR CIRCUIT MALFUNCTION (P0136, P0156: ABNORMAL VOLTAGE)

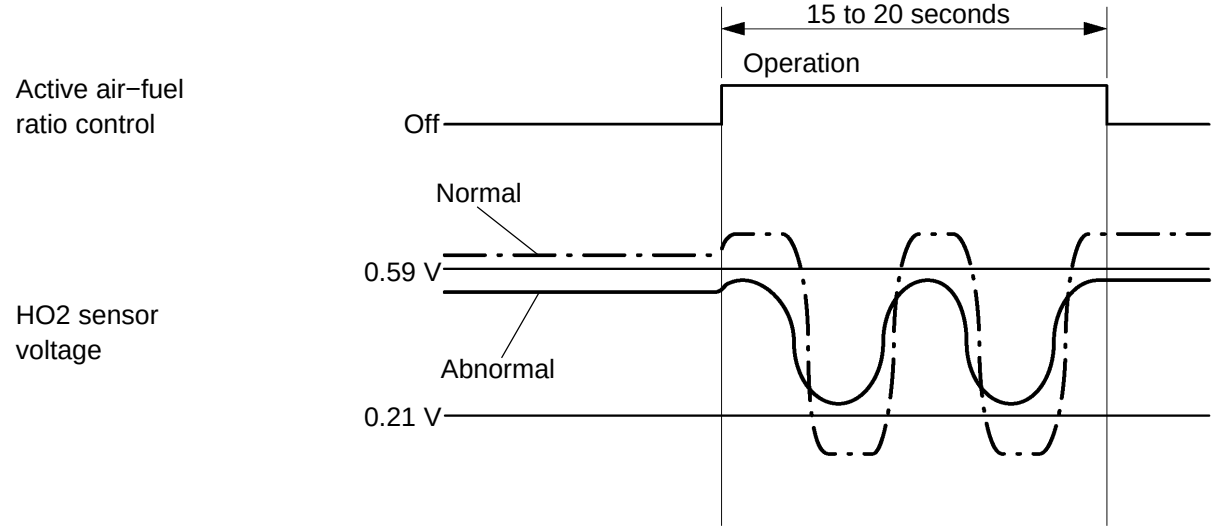

Open or Short in the Heated Oxygen (HO2) Sensor Circuit (DTC P0137, P0157, P0138 or P0158)

During active air−fuel ratio control, the ECM calculates the Oxygen Storage Capacity (OSC)* of the Three−Way Catalytic Converter (TWC) by forcibly regulating the air−fuel ratio to become rich or lean.

If the HO2 sensor has an open or short, or the voltage output of the sensor noticeably decreases, the OSC indicates an extraordinarily high value. Even if the ECM attempts to continue regulating the air−fuel ratio to become rich or lean, the HO2 sensor output does not change.

While performing active air−fuel ratio control, when the target air−fuel ratio is rich and the HO2 sensor voltage output is 0.21 V or less (lean), the ECM interprets this as an abnormally low sensor output voltage and sets DTC P0137 or P0157. When the target air−fuel ratio is lean and the voltage output is 0.59 V or more (rich) during active air−fuel ratio control, the ECM determines that the sensor voltage output is abnormally high, and sets DTC P0138 or P0158.

HINT:

DTC P0138 or P0158 is also set if the HO2 sensor voltage output is more than 1.2 V for 30 seconds or more.

*: The TWC has the capability to store oxygen. The OSC and the emission purification capacity of the TWC are mutually related. The ECM determines whether the catalyst has deteriorated, based on the calculated OSC value (see page DI−672).

HO2 SENSOR CIRCUIT LOW VOLTAGE (P0137, P0157: OPEN)

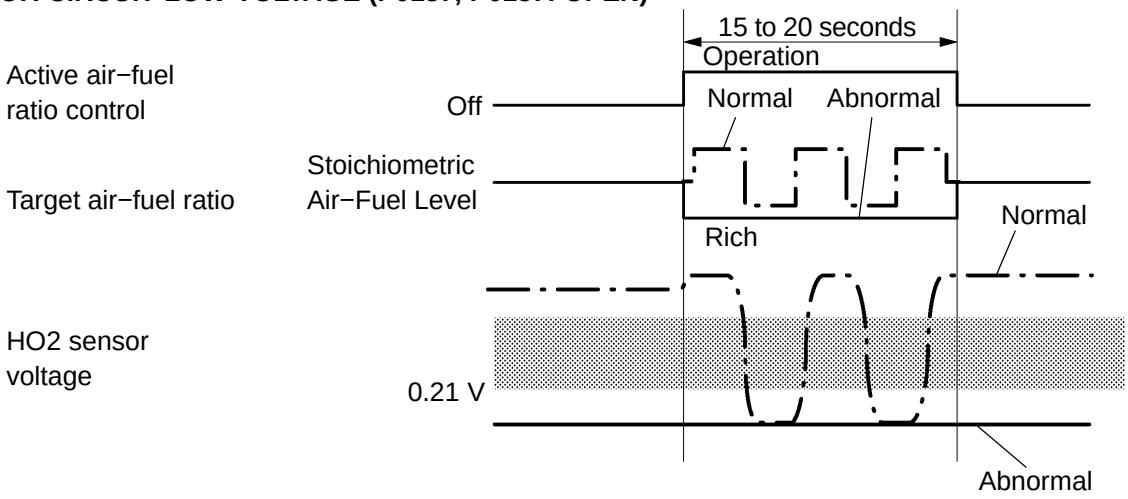

HO2 SENSOR CIRCUIT HIGH VOLTAGE (P0138, P0158: SHORT)

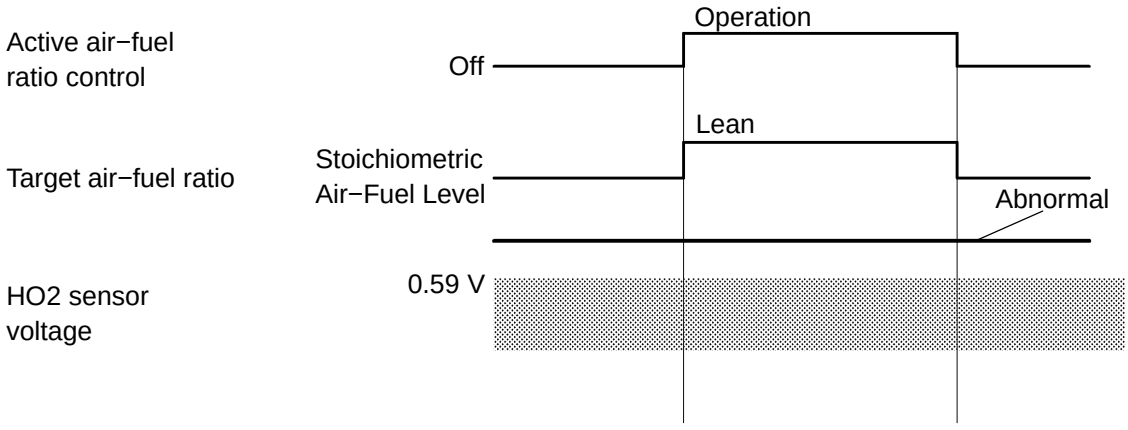

Y

B17388

High or Low Impedance of Heated Oxygen (HO2) Sensor (DTC P0136, P0156, P0137 or P0157)

Interrelation between temperature of the element and impedance:

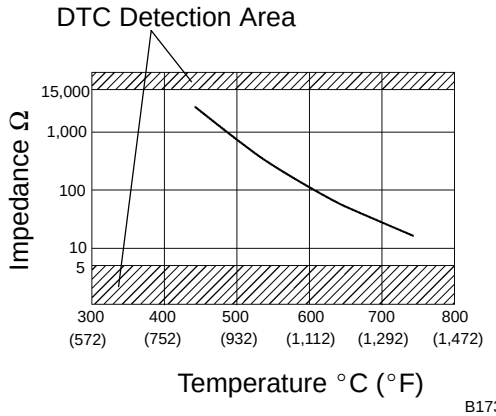

During normal air−fuel ratio feedback control, there are small variations in the exhaust gas oxygen concentration. In order to continuously monitor the slight variation of the HO2 sensor signal while the engine is running, the impedance* of the sensor is measured by the ECM. The ECM determines that there is a malfunction in the sensor when the measured impedance deviates from the standard range.

*: The effective resistance in an alternating current electrical circuit.

HINT:

- The impedance can not be measured using an ohmmeter.
- DTC P0136 or P0156 indicates the deterioration of the HO2 sensor. The ECM sets the DTC by calculating the impedance of the sensor when the typical enabling conditions are satisfied (1 driving cycle).
- DTC P0137 or P0157 indicates an open circuit in the HO2 sensor (1 driving cycle). The ECM sets this DTC when the impedance of the sensor exceeds the threshold 348.1 MΩ.

MONITOR STRATEGY

Related DTCs	P0136	Heated rear oxygen sensor (Bank 1) output voltage (Output voltage)
		Heated rear oxygen sensor (Bank 1) impedance (Low)
	P0137	Heated rear oxygen sensor (Bank 1) output voltage (Low voltage)
		Heated rear oxygen sensor (Bank 1) impedance (High)
	P0138	Heated rear oxygen sensor (Bank 1) output voltage (High voltage)
		Heated rear oxygen sensor (Bank 1) output voltage (Extremely high)
	P0156	Heated rear oxygen sensor (Bank 2) output voltage (Output voltage)
		Heated rear oxygen sensor (Bank 2) impedance (Low)
	P0157	Heated rear oxygen sensor (Bank 2) output voltage (Low voltage)
		Heated rear oxygen sensor (Bank 2) impedance (High)
	P0158	Heated rear oxygen sensor (Bank 2) output voltage (High voltage)
		Heated rear oxygen sensor (Bank 2) output voltage (Extremely high)
Required sensors/components	Main sensors/components	Heated rear oxygen sensor
	Related sensors/components	Mass air flow meter
Frequency of operation	Once per driving cycle: Active air−fuel ratio control detection Continuous: Others	
Duration	20 sec.: Heated oxygen sensor output (Output voltage, High voltage, Low voltage) 30 sec.: Heated oxygen sensor impedance (Low) 90 sec.: Heated oxygen sensor impedance (High) 10 sec.: Heated oxygen sensor output (Extremely high)	
MIL operation	2 driving cycles Heated oxygen sensor output (Output voltage, High voltage, Low voltage, Extremely high) Immediate: Heated oxygen sensor impedance (Low, High)	
Sequence of operation	None	

TYPICAL ENABLING CONDITIONS

Item	Specification	
	Minimum	Maximum
The monitor will run whenever this DTC is not present	See page DI−437	
Heated oxygen sensor output voltage (Output voltage, High voltage and Low voltage):		
Active air−fuel ratio control	Performing	
Active air−fuel ratio control being when all of following conditions met	−	
Battery voltage	11 V	−
Engine coolant temperature	75°C (167°F)	−
Idle	OFF	

Engine RPM	−	3,200 rpm
A/F sensor status	Activated	
Fuel system status	Closed loop	
Fuel−cut	OFF	
Engine load	10 to 70%	
Shift position	4th	−
Heated oxygen sensor impedance (Low):		
Battery voltage	11 V	−
Estimated rear oxygen sensor temperature	−	700˚C (1,292˚F)
ECM monitor	Completed	
P0606	Not set	
Heated oxygen sensor impedance (High):		
Battery voltage	11 V	−
Estimated rear oxygen sensor temperature	450˚C (842˚F)	−
ECM monitor	Completed	
P0606	Not set	
Heated oxygen sensor output voltage (Extremely high):		
Battery voltage	11 V	−
Time after engine start	2 sec.	−

TYPICAL MALFUNCTION THRESHOLDS

Detection Criteria	Threshold
Heated oxygen sensor output voltage (Output voltage):	
Either of the following conditions is met:	Condition 1 or 2
1. All of the following conditions are met:	Condition (a), (b) and (c)
(a) Commanded air−fuel ratio	14.3 or less
(b) Rear HO2S voltage	0.21 to 0.59 V
(c) OSC (Oxygen Storage Capacity of catalyst)	3 g or more
2. All of the following conditions are met:	Condition (d), (e) and (f)
(d) Commanded air−fuel ratio	14.9 or more
(e) Rear HO2S voltage	0.21 to 0.59 V
(f) OSC (Oxygen Storage Capacity of catalyst)	3 g or more
Heated oxygen sensor output voltage (Low voltage):	
All of the following conditions are met:	Condition 1, 2 and 3
1. Commanded air−fuel ratio	14.3 or less
2. Rear HO2S voltage	Less than 0.21 V
3. OSC (Oxygen Storage Capacity of catalyst)	3 g or more
Heated oxygen sensor output voltage (High voltage):	
All of the following conditions are met:	Condition 1, 2 and 3
1. Commanded air−fuel ratio	14.9 or more
2. Rear HO2S voltage	More than 0.59 V
3. OSC (Oxygen Storage Capacity of catalyst)	3 g or more

Heated oxygen sensor impedance (Low):	
Duration of following condition	30 sec. or more
Heated oxygen sensor impedance	Less than 5 Ω
Heated oxygen sensor impedance (High):	
Duration of following condition	90 sec. or more
Heated oxygen sensor impedance	15 kΩ or more
Heated oxygen sensor output voltage (Extremely high):	
Duration of following condition	10 sec. or more
Heated oxygen sensor voltage	1.2 V or more

COMPONENT OPERATING RANGE

Parameter	Standard Value
Heated oxygen sensor voltage	Varies between 0.1 to 0.9 V

MONITOR RESULT

Refer to page DI−445 for detailed information.

The test value and test limit information are described as shown in the following table. Check the monitor result and test values after performing the monitor drive pattern (see page DI−446).

- MID (Monitor Identification Data) is assigned to each emissions−related component.
- TID (Test Identification Data) is assigned to each test value.

HO2S bank 1 sensor 2

MID	TID	Scaling	Description of Test Value	Minimum Test Limit	Maximum Test Limit
$02	$07	Multiply by 0.001 (V)	Minimum sensor voltage	Minimum test limit	Maximum test limit
$02	$08	Multiply by 0.001 (V)	Maximum sensor voltage	Minimum test limit	Maximum test limit
$02	$8F	Multiply by 0.001 (g)	Maximum oxygen storage capacity	0	Maximum test limit

HO2S bank 2 sensor 2

MID	TID	Scaling	Description of Test Value	Minimum Test Limit	Maximum Test Limit
$06	$07	Multiply by 0.001 (V)	Minimum sensor voltage	Minimum test limit	Maximum test limit
$06	$08	Multiply by 0.001 (V)	Maximum sensor voltage	Minimum test limit	Maximum test limit
$06	$8F	Multiply by 0.001 (g)	Maximum oxygen storage capacity	0	Maximum test limit

WIRING DIAGRAM

Refer to DTC P2195 on page DI−806.

CONFIRMATION DRIVING PATTER

HINT:

- This confirmation driving pattern is used in steps 5, 8 and 11 of the following diagnostic troubleshooting procedure when using either a hand−held tester.
- Performing this confirmation pattern will activate the Heated Oxygen (HO2) sensor monitor. (The catalyst monitor is performed simultaneously.) This is very useful for verifying the completion of a repair.

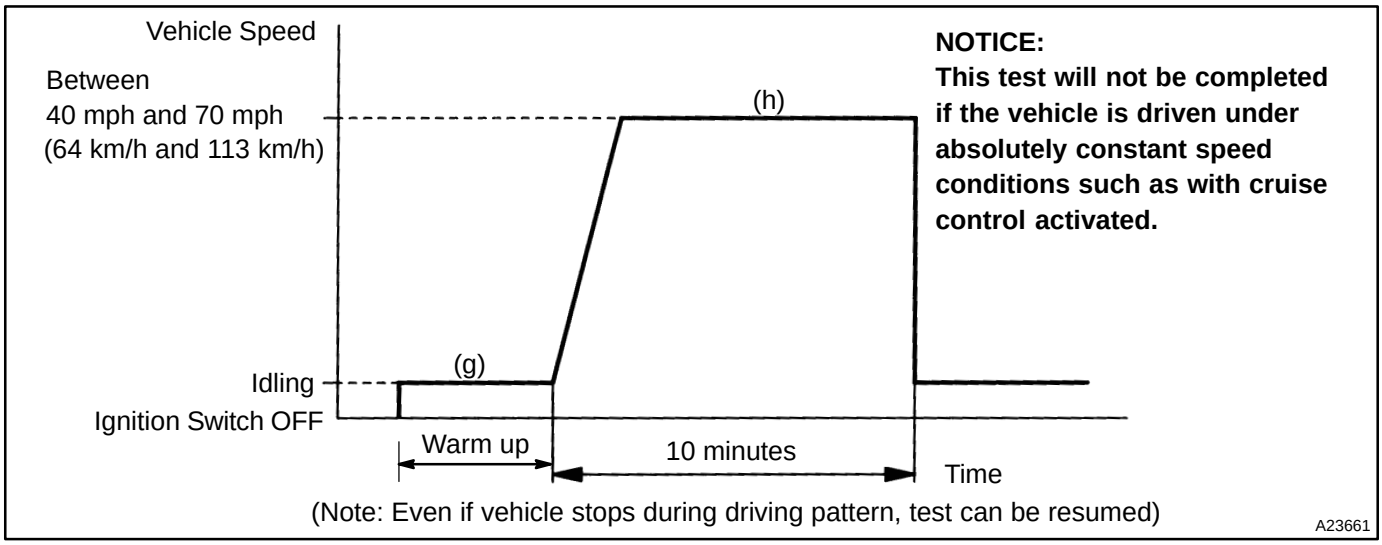

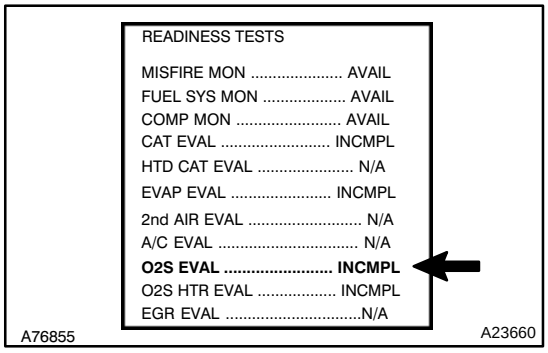

(a) Connect a hand−held tester to the DLC3.
(b) Turn the ignition switch to ON.
(c) Turn the tester or scan tool ON.
(d) Clear DTCs (where set) (see page DI−462).
(e) If using a hand−held tester, select the following menu items: DIAGNOSIS / CARB OBD II / READINESS TESTS.
(f) Check that O2S EVAL is INCMPL (incomplete).
(g) Start the engine and warm it up.
(h) Drive the vehicle at between 40 mph and 70 mph (64 km/h and 113 km/h) for at least 10 minutes.
(i) Note the state of the Readiness Tests items. Those items will change to COMPL (complete) as O2S EVAL monitor operates.
(j) On the tester, select the following menu items: DIAGNOSIS / ENHANCED OBD II / DTC INFO / PENDING CODES and check if any DTCs (any pending DTCs) are set.

HINT:

If O2S EVAL does not change to COMPL, and any pending DTCs fail to set, extend the driving time.

INSPECTION PROCEDURE

HINT:

Hand−held tester only:

Narrowing down the trouble area is possible by performing ACTIVE TEST of the following ”A/F CONTROL” (Heated oxygen sensor or another can be distinguished).

(a) Perform ACTIVE TEST by hand−held tester (A/F CONTROL).

HINT:

”A/F CONTROL” is the ACTIVE TEST which changes the injection volume to −12.5 % or +25 %.

(1) Connect the hand−held tester to the DLC3 on the vehicle.
(2) Turn the ignition switch ON.
(3) Warm up the engine with the engine speed at 2,500 rpm for approximately 90 seconds.
(4) Select the menu ”DIAGNOSIS / ENHANCED OBD II / ACTIVE TEST / A/F CONTROL”.
(5) Perform ”A/F CONTROL” with the engine in an idle condition (press the right or left button).

RESULT:

Heated oxygen sensor reacts in accordance with increase and decrease of injection volume
+25 % → rich output: More than 0.5 V
−12.5 % → lean output: Less than 0.4 V

NOTICE:

There is a few seconds delay in the sensor 1 (front sensor) output. And there is approximately 20 seconds delay in the sensor 2 (rear sensor).

The following A/F CONTROL procedure enables the technician to check and graph the voltage output of the heated oxygen sensors.
For displaying the graph indication, first enter ”ACTIVE TEST / A/F CONTROL / USER DATA,” then select ”A/F B1,2S1and O2S B1,2S2” by pressing ”YES” button, and push ”ENTER” button before pressing ”F4” button.

	Output voltage of A/F sensor (sensor 1: front sensor)	Output voltage of heated oxygen sensor (sensor 2: rear sensor)	Mainly suspected trouble area
Case 1	Injection volume +25 % −12.5 % Output voltage More than 0.5 V Less than 0.4 V **OK**	Injection volume +25 % −12.5 % Output voltage More than 0.5 V Less than 0.4 V **OK**	—
Case 2	Injection volume +25 % −12.5 % Output voltage Almost no reaction **NG**	Injection volume +25 % −12.5 % Output voltage More than 0.5 V Less than 0.4 V **OK**	Sensor 1: front sensor (sensor 1, heater, sensor 1 circuit)
Case 3	Injection volume +25 % −12.5 % Output voltage More than 0.5 V Less than 0.4 V **OK**	Injection volume +25 % −12.5 % Output voltage Almost no reaction **NG**	Sensor 2: rear sensor (sensor 2, heater, sensor 2 circuit)
Case 4	Injection volume +25 % −12.5 % Output voltage Almost no reaction **NG**	Injection volume +25 % −12.5 % Output voltage Almost no reaction **NG**	Extremely rich or lean actual air−fuel ratio (Injector, fuel pressure, gas leakage in exhaust system, etc.)

HINT:

- If different DTCs that are related to different system are output simultaneously while terminal E2 is used as a ground terminal, terminal E2 may be open.
- Read freeze frame data using the hand−held tester. Freeze frame data records the engine conditions when a malfunction is detected. When troubleshooting, it is useful for determining whether the vehicle was running or stopped, the engine was warmed up or not, the air−fuel ratio was lean or rich, etc. when a malfunction occurred.

1	**Read output DTC.**

PREPARATION:

(a) Connect the hand−held tester to the DLC3.
(b) Turn the ignition switch ON and push the hand−held tester main switch ON.
(c) When using hand−held tester, enter the following menu: DIAGNOSIS / ENHANCED OBD II / DTC INFO / CURRENT CODES.

CHECK:

Read the DTC using the hand−held tester.

RESULT:

Display (DTC Output)	Proceed to
P0138, P0158	A
P0137, P0157	B
P0136, P0156	C

HINT:

If any other codes besides P0136 are output, perform the troubleshooting for those DTCs first.

B → **Go to step 14.**

C → **Go to step 7.**

A

2	**Check output voltage of heated oxygen sensor.**

PREPARATION:

(a) Connect the hand−held tester to the DLC3.
(b) After warming up the engine, run the engine at 2,500 rpm for 3 minutes.
(c) When using hand−held tester, enter the following menu: DIAGNOSIS / ENHANCED OBD II / DATA LIST / ALL / O2S B1S2 or B2S2.
(d) Allow the engine to idle.

CHECK:

Read the Heated Oxygen (HO2) sensor output voltage while idling.

RESULT:

HO2 Sensor Output Voltages	Proceed To
More than 1.2 V	A
Less than 1.0 V	B

B → **Go to step 5.**

A

3	Check for short in harness and connector between terminal OX1B and HT1B, OX2B and HT2B of ECM.

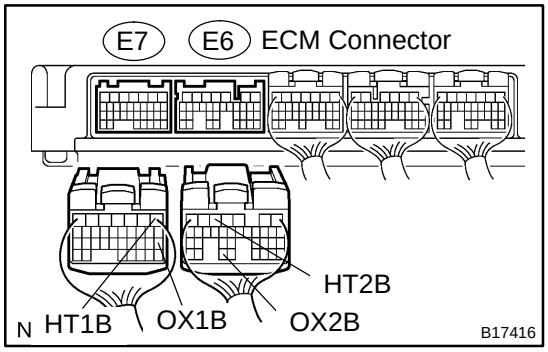

PREPARATION:

(a) Turn the ignition switch to OFF and wait for 5 minutes.

(b) Disconnect the E6 and E7 ECM connector.

CHECK:

(a) Check the resistance.

OK:

Standard:

Tester Connections	Specified Conditions
HT1B (E7−1) − OX1B (E7−18)	10 kΩ or higher
HT2B (E6−5) − OX2B (E6−33)	10 kΩ or higher

OK	Replace ECM (See page SF−82).

NG

4	Check resistance of heated oxygen sensor heater.

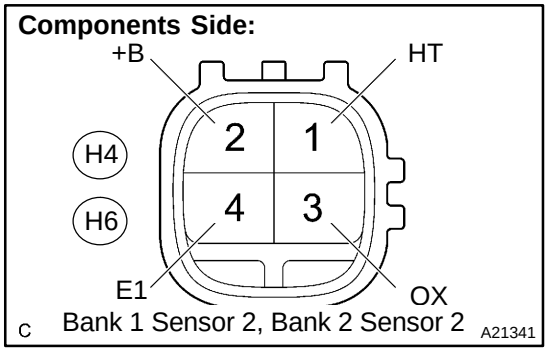

PREPARATION:

Disconnect the heated oxygen sensor connector.

CHECK:

Measure resistance between terminals of the heated oxygen sensor.

OK:

Standard:

Tester Connection	Specified Condition
HT (1) − +B (2)	11 to 16 Ω at 20°C (68°F)
+B (2) − OX (3)	10 kΩ or higher

NG	Replace heated oxygen sensor.

OK

Repair or replace harness or connector.

5	Perform confirmation driving pattern.

NEXT

6	**Check whether DTC output recurs (DTC P0138, P0158)**

CHECK:

(a) On the hand−held tester, select the following menu items: DIAGNOSIS / ENHANCED OBD II / DTC INFO / PENDING CODES.

(b) Read DTCs.

RESULT:

Display (DTC Output)	Proceed To
P0138 or P0158	A
No output	B

B → **Check for intermittent problems (See page DI−430).**

A →

Replace heated oxygen sensor.

7	**Check output voltage of heated oxygen sensor.**

PREPARATION:

(a) Connect the hand−held tester to the DLC3.

(b) Turn the ignition switch to ON and turn the tester ON.

(c) Start the engine.

(d) Select the following menu items: DIAGNOSIS / ENHANCED OBD II / DATA LIST / ALL / O2S B1S2.

(e) After warming up the engine, run the engine at an engine speed of 2,500 rpm for 3 minutes.

CHECK:

(a) Read the output voltage of the HO2 sensor when the engine rpm is suddenly increased.

HINT:

Quickly accelerate the engine to 4,000 rpm 3 times using the accelerator pedal.

Standard: Fluctuates between 0.4 V or less and 0.5 V or more.

NG → **Go to step 14.**

OK →

8	**Perform confirmation driving pattern.**

NEXT →

9	**Check whether DTC output recurs (DTC P0136, P0156)**

CHECK:

(a) On the hand−held tester, select the following menu items: DIAGNOSIS / ENHANCED OBD II / DTC INFO / PENDING CODES.

(b) Read DTCs.

RESULT:

Display (DTC Output)	Proceed To
P0136 or P0156	A
No output	B

B → **Check for intermittent problems (See page DI−430).**

A

10	**Replace heated oxygen sensor.**

NEXT

11	**Perform confirmation driving pattern.**

NEXT

12	**Check whether DTC output recurs (DTC P0136, P0156)**

CHECK:

(a) On the hand−held tester, select the following menu items: DIAGNOSIS / ENHANCED OBD II / DTC INFO / PENDING CODES.

(b) Read DTCs.

RESULT:

Display (DTC Output)	Proceed To
P0136 or P0156	A
No output	B

B → **Repair completed.**

A

13	Perform active test (injection volume).

PREPARATION:

(a) Connect the hand−held tester to the DLC3.
(b) Start the engine and turn the tester ON.
(c) Warm up the engine.
(d) Select the following menu items: DIAGNOSIS / ENHANCED OBD II / ACTIVE TEST / INJ VOL.

CHECK:

(a) Change the fuel injection volume using the tester, monitoring the voltage output of Air−Fuel Ratio (A/F) and HO2 sensors displayed on the tester.

HINT:

- Change the fuel injection volume within the range of −12 % and +12 %. The injection volume can be changed in 1 % graduations within the range.
- The A/F sensor is displayed as AFS B1S1 (AFS B2S1), and the HO2 sensor is displayed as O2S B1S2 (O2S B2S2), on hand−held testers.

RESULT:

Tester Display (Sensor)	Voltage Variations	Proceed To
AFS B1S1 (AFS B2S1) (A/F)	Alternates between more and less than 3.3 V	OK
AFS B1S1 (AFS B2S1) (A/F)	Remains at more than 3.3 V	NG
AFS B1S1 (AFS B2S1) (A/F)	Remains at less than 3.3 V	NG

HINT:

A normal HO2 sensor voltage (O2S B1S2) reacts in accordance with increases and decreases in fuel injection volumes. When the A/F sensor voltage remains at either less or more than 3.3 V despite the HO2 sensor indicating a normal reaction, the A/F sensor is malfunctioning.

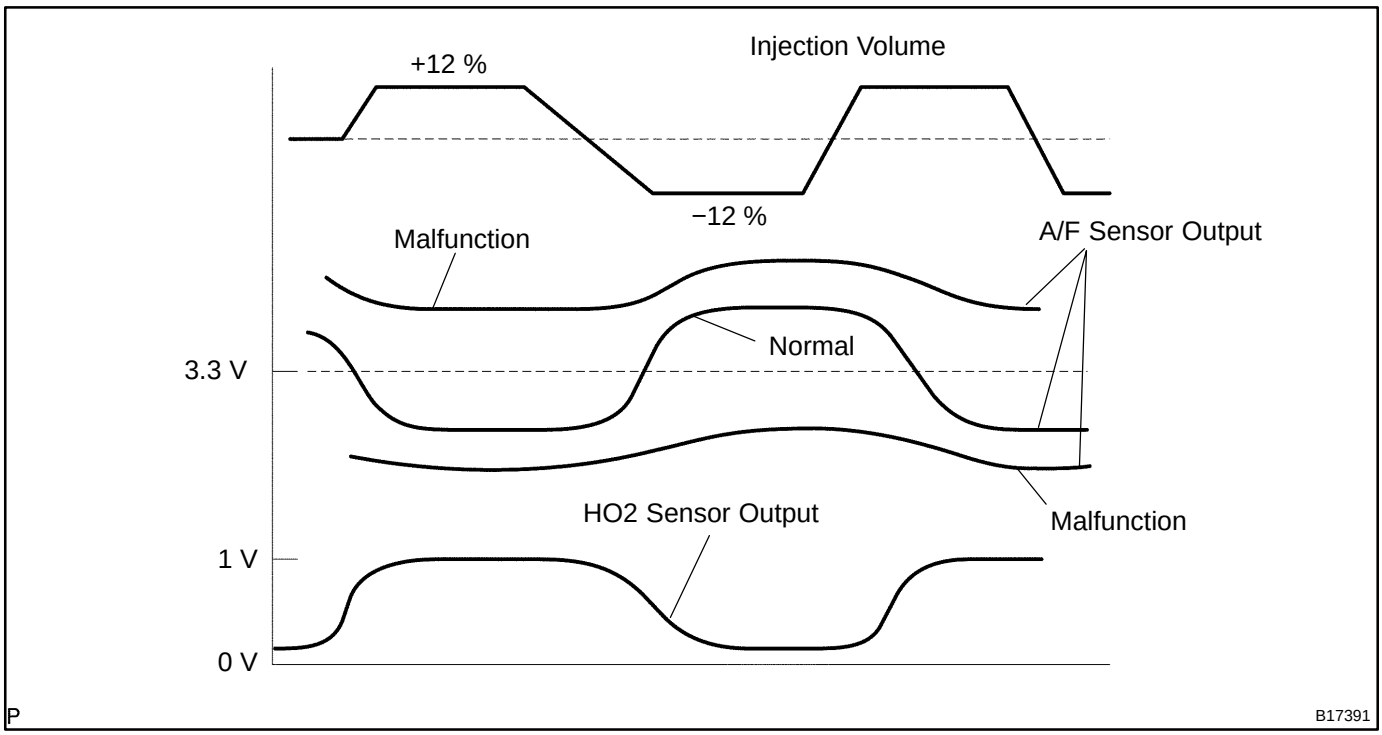

NG → **Replace air−fuel ratio (A/F) sensor.**

OK

Check and repair extremely rich or lean actuarial air fuel ratio (injector, fuel pressure, gas leakages from exhaust system, etc.)

14	Check for exhaust gas leakage.

CHECK:

Check for exhaust gas leakage from the exhaust manifold and pipe.

OK: No exhaust gas leakage.

NG → **Repair or replace exhaust gas leakage point.**

OK

15	Inspect heated oxygen sensor.

Components Side:

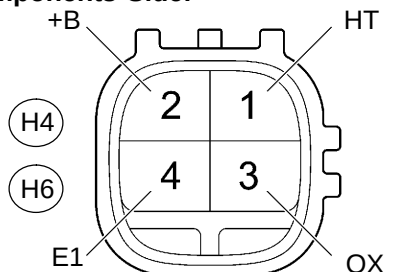

C Bank 1 Sensor 2, Bank 2 Sensor 2 A21341

PREPARATION:

Disconnect the HO2 sensor connector.

CHECK:

Measure the resistance between the terminals of the HO2 sensor connector.

OK:

Standard:

Tester Connections	Specified Conditions
HT (2) − +B (1)	11 to 16 Ω at 20°C (68°F)
HT (2) − E (3)	10 kΩ or higher

NG → **Replace heated oxygen sensor.**

OK

16	Check EFI relay.

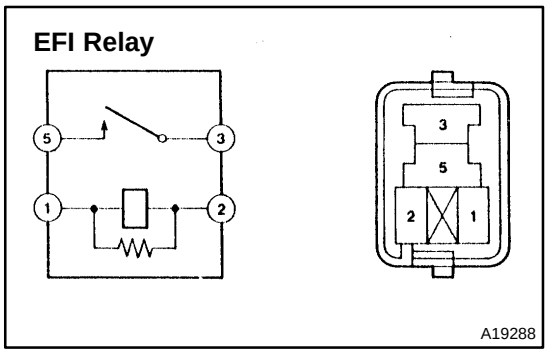

PREPARATION:

Remove the EFI relay from the engine room J/B.

CHECK:

Inspect the EFI relay.

OK:

Standard:

Terminal No.	Condition	Specified Condition
3 − 5	Always	10 KΩ or higher
3 − 5	Apply B+ between terminals 1 and 2	Below 1 Ω

NG → **Replace EFI relay.**

OK

17	**Check for open and short in harness and connector between ECM and heated oxygen sensor.**

Wire Harness Side:

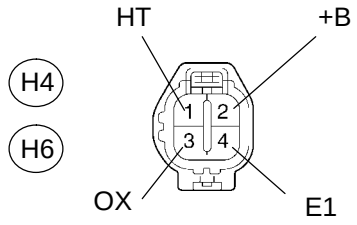

Bank 1 Sensor 2, Bank 2 Sensor 2 A23543

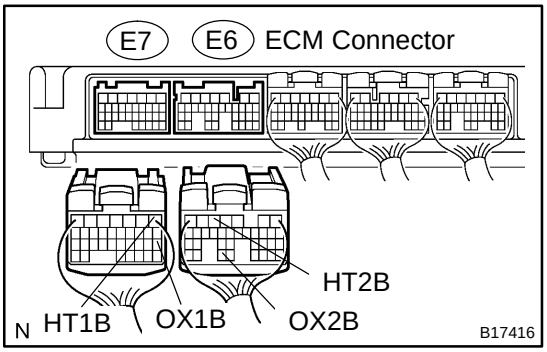

PREPARATION:

(a) Disconnect the heated oxygen sensor connector.

(b) Disconnect the E6 and E7 ECM connector.

CHECK:

Measure the resistance between the wire harness side connectors.

OK:

Standard:

Tester Connection	Specified Condition
OX (H4−3) − OX1B (E7−18)	Below 1 Ω
HT (H4−1) − HT1B (E7−1)	Below 1 Ω
OX (H6−3) − OX2B (E6−33)	Below 1 Ω
HT (H6−1) − HT2B (E6−5)	Below 1 Ω
OX (H4−3) or OX1B (E7−18) − Body ground	10 kΩ or higher
HT (H4−1) or HT1B (E7−1) − Body ground	10 kΩ or higher
OX (H6−3) or OX2B (E6−33) − Body ground	10 kΩ or higher
HT (H6−1) or HT2B (E6−5) − Body ground	10 kΩ or higher

Reference (Bank 1 Sensor 1 System Drawing):

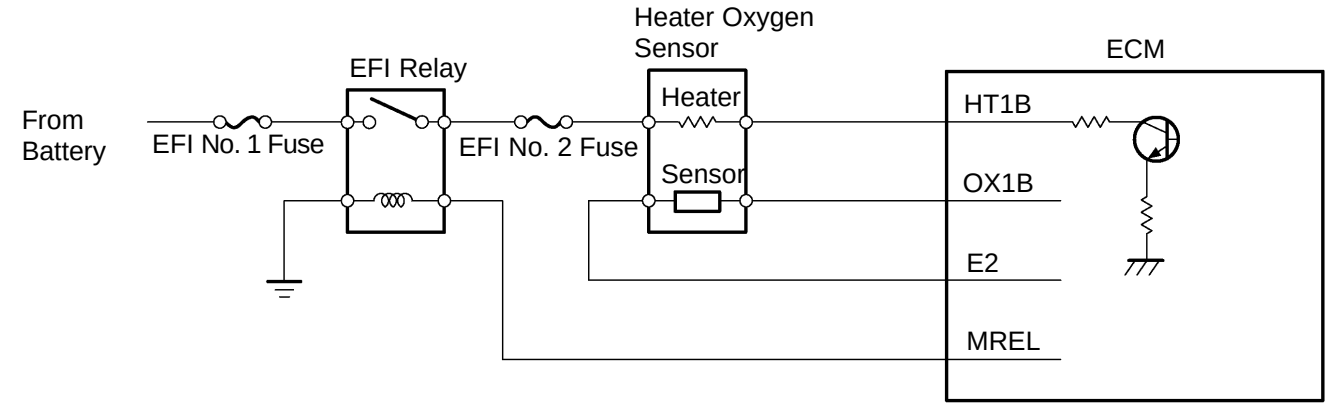

NG → **Repair or replace harness or connector.**

OK →

Replace heated oxygen sensor.

DIDRF−01

DTC	P0171	System too Lean (Bank 1)

DTC	P0172	System too Rich (Bank 1)

DTC	P0174	System too Lean (Bank 2)

DTC	P0175	System too Rich (Bank 2)

CIRCUIT DESCRIPTION

The fuel trim is related to the feedback compensation value, not to the basic injection time. The fuel trim consists of both the short−term and long−term fuel trims.

The short−term fuel trim is fuel compensation that is used to constantly maintain the air−fuel ratio at stoichiometric levels. The signal from the Air−Fuel Ratio (A/F) sensor indicates whether the air−fuel ratio is rich or lean compared to the stoichiometric ratio. This triggers a reduction in the fuel injection volume if the air−fuel ratio is rich and an increase in the fuel injection volume if it is lean.

Factors such as individual engine differences, wear over time and changes in operating environment cause short−term fuel trim to vary from the central value. The long−term fuel trim, which controls overall fuel compensation, compensates for long−term deviations in the fuel trim from the central value caused by the short−term fuel trim compensation.

If both the short−term and long−term fuel trims are lean or rich beyond predetermined values, it is interpreted as a malfunction, and the ECM illuminates the MIL and sets a DTC.

DTC No.	DTC Detecting Condition	Trouble Area
P0171 P0174	When air−fuel ratio feedback is stable after warming up the engine, fuel trim is considered to be in error on LEAN side (2 trip detection logic)	• Air induction system • Injector blockage • Mass air flow meter • Engine coolant temperature sensor • Fuel pressure • Gas leakage in exhaust system • Open or short in heated oxygen sensor (bank 1, 2 sensor 1) circuit • Heated oxygen sensor (bank 1, 2 sensor 1) • Heated oxygen sensor heater (bank 1, 2 sensor 1) • EFI relay • PCV piping • ECM
P0172 P0175	When air−fuel ratio feedback is stable after warming up the engine, fuel trim is considered to be in error on RICH side (2 trip detection logic)	• Injector leak, blockage • Mass air flow meter • Engine coolant temperature sensor • Ignition system • Fuel pressure • Gas leakage in exhaust system • Open or short in heated oxygen sensor (bank 1, 2 sensor 1) circuit • Heated oxygen sensor (bank 1, 2 sensor 1) • ECM

HINT:

- When DTC P0171 or P0174 is recorded, the actual air−fuel ratio is on the LEAN side. When DTC P0172 or P0175 is recorded, the actual air−fuel ratio is on the RICH side.
- If the vehicle runs out of fuel, the air−fuel ratio is LEAN and DTC P0171 or P0174 may be recorded. The MIL then comes on.
- If the total of the short−term fuel trim value and long−term fuel trim value is within ± 35 % (engine coolant temperature is more than 75 °C (167°F)), the system is functioning normally.

MONITOR DESCRIPTION

Under closed−loop fuel control, fuel injection volumes that deviate from those estimated by the ECM cause changes in the long−term fuel trim compensation value. The long−term fuel trim is adjusted when there are persistent deviations in the short−term fuel trim values. Deviations from the ECM's estimated fuel injection volumes also affect the average fuel trim learning value, which is a combination of the average short−term fuel trim (fuel feedback compensation value) and the average long−term fuel trim (learning value of the air−fuel ratio). If the average fuel trim learning value exceeds the malfunction thresholds, the ECM interprets this a fault in the fuel system and sets a DTC.

Example:

The average fuel trim leaning value is more than +35 % or less than −35 %, the ECM interprets this as a fuel system malfunction.

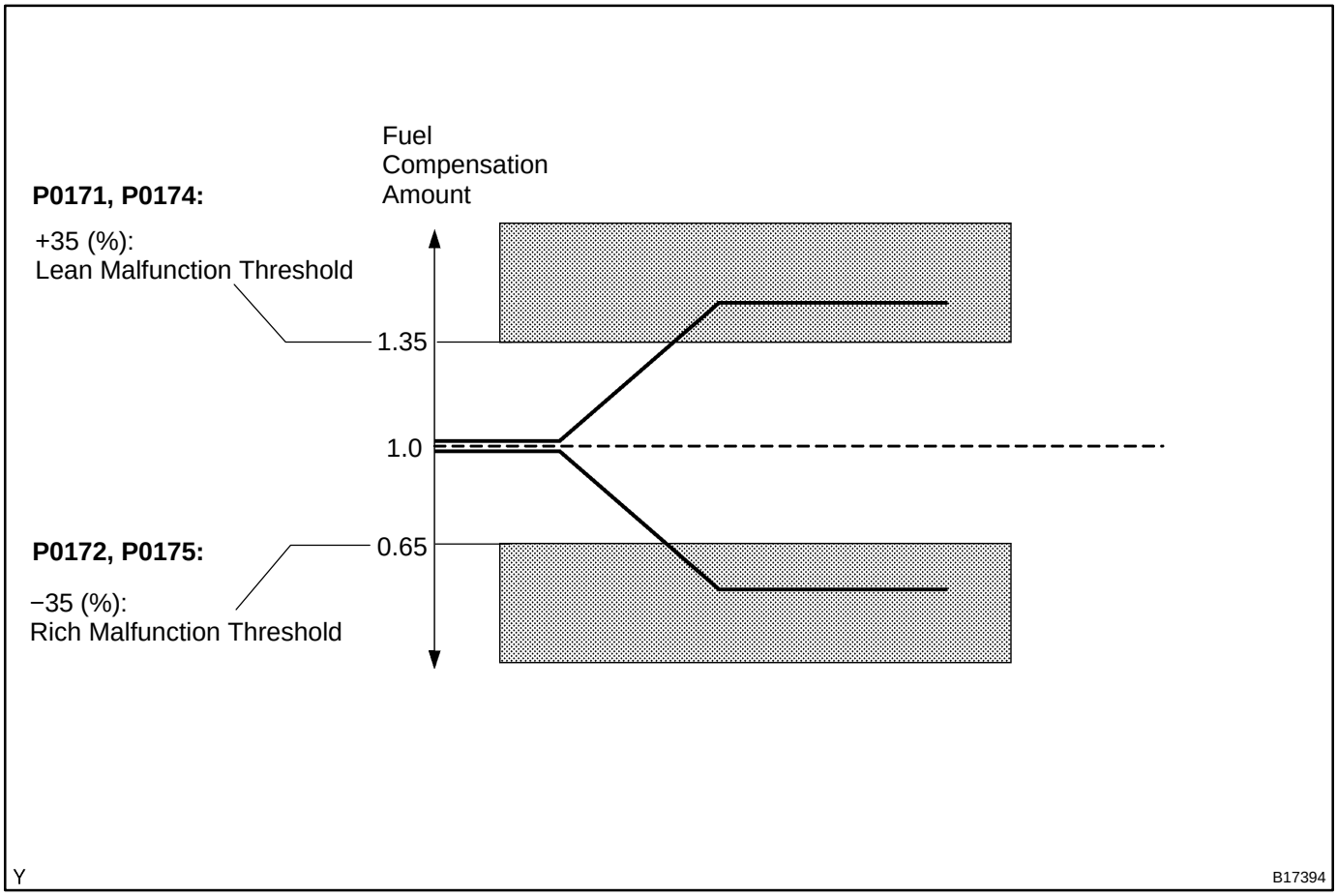

MONITOR STRATEGY

Related DTCs	P0171	Fuel system lean (Bank 1)
	P0172	Fuel system rich (Bank 1)
	P0174	Fuel system lean (Bank 2)
	P0175	Fuel system rich (Bank 2)
Required sensors/components	Main sensors/components	Front oxygen sensor
	Related sensors/components	Engine coolant temperature sensor, Mass air flow meter, Crankshaft position sensor
Frequency of operation	Continuous	
Duration	Within 10 seconds	
MIL operation	2 driving cycles	
Sequence of operation	None	

TYPICAL ENABLING CONDITIONS

Item	Specification	
	Minimum	Maximum
The monitor will run whenever this DTC is not present	See page DI−437	
Battery voltage	11 V	−
Fuel system status	Closed−loop	
Either of the following conditions is met:	Condition 1 or 2	
1. Engine RPM	−	1,000 rpm
2. Intake air amount per revolution	0.26 g/sec.	−
Catalyst monitor	No executed	

TYPICAL MALFUNCTION THRESHOLDS

Detection Criteria	Threshold
EVAP purge−cut	Executing
Either of the following conditions is met	Condition 1 or 2
1. Average between short−term fuel trim and long−term fuel trim	35% or more (varies with ECT)
2. Average between short−term fuel trim and long−term fuel trim	−35% or less (varies with ECT)

WIRING DIAGRAM

Refer to DTC P0031 on page DI−507.

INSPECTION PROCEDURE

HINT:

Hand−held tester only:

Malfunctioning areas can be identified by performing the A/F CONTROL function provided in the ACTIVE TEST. The A/F CONTROL function can help to determine whether the Air−Fuel Ratio (A/F) sensor, Heated Oxygen (HO2) sensor and other potential trouble areas are malfunctioning.

The following instructions describe how to conduct the A/F CONTROL operation using a hand−held tester.

(1) Connect a hand−held tester to the DLC3.
(2) Start the engine and turn the tester ON.
(3) Warm up the engine at an engine speed of 2,500 rpm for approximately 90 seconds.
(4) On the tester, select the following menu items: DIAGNOSIS / ENHANCED OBD II / ACTIVE TEST / A/F CONTROL.
(5) Perform the A/F CONTROL operation with the engine in an idling condition (press the RIGHT or LEFT button to change the fuel injection volume).
(6) Monitor the voltage outputs of the A/F and HO2 sensors (AFS B1S1 (AFS B2S1) and OS2 B1S2 (OS2 B2S2)) displayed on the tester.

HINT:

- The A/F CONTROL operation lowers the fuel injection volume by 12.5 % or increases the injection volume by 25 %.
- Each sensor reacts in accordance with increases and decreases in the fuel injection volume.

Standard:

Tester Display (Sensor)	Injection Volumes	Status	Voltages
AFS B1S1 (AFS B2S1) (A/F)	+25 %	Rich	Less than 3.0
AFS B1S1 (AFS B2S1) (A/F)	−12.5 %	Lean	More than 3.35
O2S B1S2 (O2S B2S2) (HO2)	+25 %	Rich	More than 0.55
O2S B1S2 (O2S B2S2) (HO2)	−12.5 %	Lean	Less than 0.4

NOTICE:

The Air−Fuel Ratio (A/F) sensor has an output delay of a few seconds and the Heated Oxygen (HO2) sensor has a maximum output delay of approximately 20 seconds.

- Following the A/F CONTROL procedure enables technicians to check and graph the voltage outputs of both the A/F and HO2 sensors.
- To display the graph, select the following menu items on the tester: DIAGNOSIS / ENHANCED OBD II / ACTIVE TEST / A/F CONTROL / USER DATA / AFS B1S1 and O2S B1S2, and press the YES button and then the ENTER button followed by the F4 button.

Case	A/F Sensor (Sensor 1) Output Voltage	HO2 Sensor (Sensor 2) Output Voltage	Main Suspected Trouble Areas
1	Injection volume +25 % −12.5 % Output voltage More than 3.35 V Less than 3.0 V **OK**	Injection volume +25 % −12.5 % Output voltage More than 0.55 V Less than 0.4V **OK**	—
2	Injection volume +25 % −12.5 % Output voltage Almost no reaction **NG**	Injection volume +25 % −12.5 % Output voltage More than 0.55 V Less than 0.4V **OK**	● A/F sensor ● A/F sensor heater ● A/F sensor circuit
3	Injection volume +25 % −12.5 % Output voltage More than 3.35 V Less than 3.0V **OK**	Injection volume +25 % −12.5 % Output voltage Almost no reaction **NG**	● HO2 sensor ● HO2 sensor heater ● HO2 sensor circuit
4	Injection volume +25 % −12.5 % Output voltage Almost no reaction **NG**	Injection volume +25 % −12.5 % Output voltage Almost no reaction **NG**	● Injector ● Fuel pressure ● Gas leakage from exhaust system (Air−fuel ratio extremely lean or rich)

HINT:

- Read freeze frame data using a hand−held tester. Freeze frame data record the engine condition when malfunctions are detected. When troubleshooting, freeze frame data can help determine if the vehicle was moving or stationary, if the engine was warmed up or not, if the air−fuel ratio was lean or rich, and other data, from the time the malfunction occurred.
- A low A/F sensor voltage could be caused by a rich air−fuel mixture. Check for conditions that would cause the engine to run rich.
- A high A/F sensor voltage could be caused by a lean air−fuel mixture. Check for conditions that would cause the engine to run lean.

1	**Check any other DTCs output (in addition to DTC P0171, P0172, P0174 or P0175).**

PREPARATION:

(a) Connect a hand−held tester to the DLC3.
(b) Turn the ignition switch to ON and turn the tester ON.
(c) Select the following menu items: DIAGNOSIS / ENHANCED OBD II / DTC INFO / CURRENT CODES.

CHECK:

(a) Read DTCs.

Result:

Display (DTC Output)	Proceed To
P0171, P0172, P0174 or P0175	A
P0171, P0172, P0174 or P0175 and other DTCs	B

HINT:

If any DTCs other than P0171, P0172, P0174 or P0175 are output, troubleshoot those DTCs first.

B → **Go to relevant DTC chart (See page DI−477).**

A

2	**Check connection of PCV piping.**

OK:

PCV hose is connected correctly and is not damaged.

NG → **Repair or replace PCV piping.**

OK

3	**Check air induction system (See page SF−1).**

CHECK:

Check the air induction system for vacuum leaks.

NG → **Repair or replace air induction system.**

OK

4	**Perform active test (A/F control).**

(a) Connect the hand−held tester to the DLC3.
(b) Start the engine and turn the tester ON.
(c) Warm up the engine at an engine speed of 2,500 rpm for approximately 90 seconds.
(d) On the tester, select the following menu items: DIAGNOSIS / ENHANCED OBD II / ACTIVE TEST / A/F CONTROL.
(e) Perform the A/F CONTROL operation with the engine in an idling condition (press the RIGHT or LEFT button to change the fuel injection volume).
(f) Monitor the voltage outputs of A/F and HO2 sensors(AFS B1S1 (AFS B2S1) and O2S B1S2 (O2S B2S2)) displayed on the tester.

HINT:

- The A/F CONTROL operation lowers the fuel injection volume by 12.5 % or increases the injection volume by 25 %.
- Each sensor reacts in accordance with increases and decreases in the fuel injection volume.

Standard:

Tester Display (Sensor)	Injection Volumes	Status	Voltages
AFS B1S1 (AFS B2S1) (A/F)	+25 %	Rich	Less than 3.0
AFS B1S1 (AFS B2S1) (A/F)	−12.5 %	Lean	More than 3.35
O2S B1S2 (O2S B2S2) (HO2)	+25 %	Rich	More than 0.55
O2S B1S2 (O2S B2S2) (HO2)	−12.5 %	Lean	Less than 0.4

Result:

Status AFS B1S1 (AFS B2S1)	Status O2S B1S2 (O2S B2S2)	A/F Condition and A/F Sensor Condition	Misfires	Suspected Trouble Areas	Proceed To
Lean/Rich	Lean/Rich	Normal	—	—	C
Lean	Lean	Actual air−fuel ratio lean	May occur	• PCV valve and hose • PCV hose connections • Injector blockage • Gas leakage from exhaust system • Air induction system • Fuel pressure • Mass Air Flow (MAF) meter • Engine Coolant Temperature (ECT) sensor	A

Rich	Rich	Actual air−fuel ratio rich	—	• Injector leakage or blockage • Gas leakage from exhaust system • Ignition system • Fuel pressure • MAF meter • ECT sensor	A
Lean	Lean/Rich	A/F sensor malfunction	—	• A/F sensor	B
Rich	Lean/Rich	A/F sensor malfunction	—	• A/F sensor	B

Lean: During A/F CONTROL, the A/F sensor output voltage (AFS) is consistently more than 3.35 V, and the HO2 sensor output voltage (O2S) is consistently less than 0.4 V.
Rich: During A/F CONTROL, the AFS is consistently less than 3.0 V, and the O2S is consistently more than 0.55 V.

B → **Go to step 11.**

C → **Go to step 15.**

A

5 **Read value of engine coolant temperature.**

PREPARATION:
(a) Connect the hand−held tester to the DLC3.
(b) Turn the ignition switch to ON and turn the tester ON.
(c) Select the following menu items: DIAGNOSIS / ENHANCED OBD II / DATA LIST / ALL / COOLANT TEMP.

CHECK:
(a) Read the COOLANT TEMP twice, when the engine is cold and also when warmed up.
Standard:
With cold engine: Same as ambient air temperature.
With warm engine: Between 75°C and 95°C (167°F and 203°F)

NG → **Replace engine coolant temperature sensor.**

OK

6	**Read value of mass air flow meter.**

PREPARATION:

(a) Connect the hand−held tester to the DLC3.
(b) Turn the ignition switch to ON and turn the tester ON.
(c) Select the following menu items: DIAGNOSIS / ENHANCED OBD II / DATA LIST / ALL / MAF and COOLANT TEMP.
(d) Allow the engine to idle until the COOLANT TEMP reaches 75°C (167°F) or more.

CHECK:

(a) Read the MAF with the engine in an idling condition and at an engine speed of 2,500 rpm.
Standard:
MAF while engine idling: Between 1.4 gm/s and 2.3 gm/s (shift position: N, A/C: OFF).
MAF at engine speed of 2,500 rpm: Between 5.4 gm/s and 7.9 gm/s (shift position: N, A/C: OFF).

NG → **Replace mass air flow meter.**

OK

7	**Check fuel pressure (See page SF−7).**

CHECK:

Check the fuel pressure (high or low pressure).

NG → **Check and replace fuel pump, pressure regulator, fuel pipe line and filter (See page SF−1).**

OK

8	**Check exhaust system for gas leakage.**

OK:

No exhaust gas leakage.

NG → **Repair or replace exhaust gas leakage point.**

OK

9	**Check for spark and ignition (See page IG−1).**

HINT:
If the spark plugs or ignition system malfunction, engine misfire may occur. The misfire counter can be read with the hand−held tester. Enter the following menus: DIAGNOSIS / ENHANCED OBD II / DATA LIST / MISFIRE / CYL#1 (to CYL#8).

NG → **Repair or replace ignition system.**

OK

10	**Check injector injection (See page SF−29).**

HINT:
If the injectors malfunction, engine misfires may occur. The misfire counter can be read with the hand−held tester. Enter the following menus: DIAGNOSIS / ENHANCED OBD II / DATA LIST / MISFIRE / CYL#1 (to CYL#8).

NG → **Replace injector.**

OK

11	**Check resistance of air−fuel ratio (A/F) sensor heater.**

Component Side:

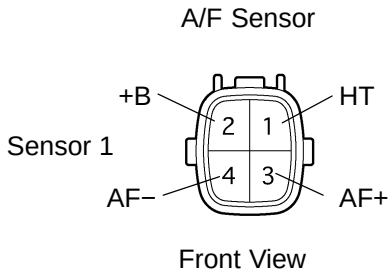

PREPARATION:
Disconnect the air−fuel ratio (A/F) sensor connector.
CHECK:
Measure resistance between the terminals of the A/F sensor connector.
OK:

Standard:

Tester Connection	Specified Condition
HT (1) − +B (2)	1.8 to 3.4 Ω at 20°C (68°F)
HT (1) − AF− (4)	10 kΩ or higher

NG → **Replace air−fuel ratio (A/F) sensor.**

OK

12	Check A/F relay.

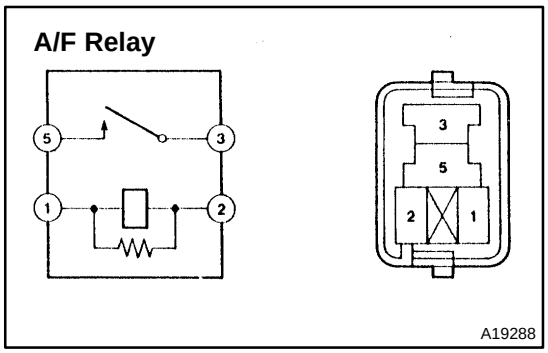

PREPARATION:

Remove the A/F relay from the engine room J/B.

CHECK:

Inspect the A/F relay.

OK:

Standard:

Terminal No.	Condition	Specified Condition
3 − 5	Always	10 KΩ or higher
3 − 5	Apply B+ between terminals 1 and 2	Below 1 Ω

NG → **Replace A/F relay.**

OK

13	Check for open and short in harness and connector between ECM and A/F sensor.

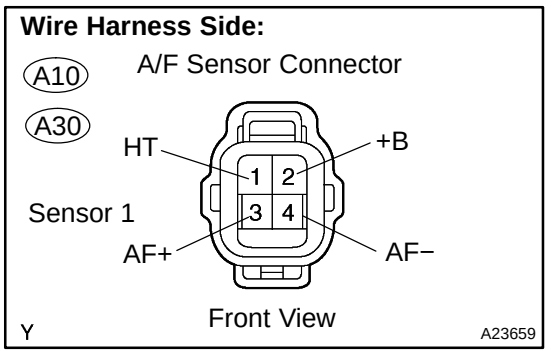

PREPARATION:

(a) Disconnect the A10 or A30 A/F sensor connector.

(b) Turn the ignition switch to ON.

CHECK:

(a) Measure the voltage between the +B terminal of the A/F sensor connector and body ground.

OK:

Standard:

Tester Connections	Specified Conditions
+B (2) − Body ground	9 to 14 V

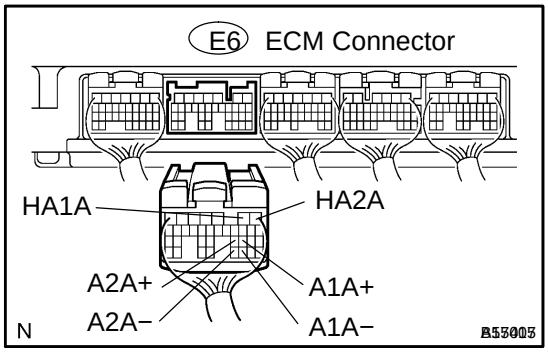

PREPARATION:

(a) Turn the ignition switch to OFF.

(b) Disconnect the E6 ECM connector.

CHECK:

(a) Check the resistance.

OK:

Standard (Check for open):

Tester Connections	Specified Conditions
HT (A10−1) − HA1A (E6−2) HT (A30−1) − HA2A (E6−1)	Below 1 Ω
AF+ (A10−3) − A1A+ (E6−22) AF+ (A30−3) − A2A+ (E6−23)	Below 1 Ω
AF− (A10−4) − A1A− (E6−30) AF− (A30−4) − A2A− (E6−31)	Below 1 Ω

Standard (Check for short):

Tester Connections	Specified Conditions
HT (A10−1) or HA1A (E6−2) − Body ground HT (A30−1) or HA2A (E6−1) − Body ground	10 kΩ or higher
AF+ (A10−3) or A1A+ (E6−22) − Body ground AF+ (A30−3) or A2A+ (E6−23) − Body ground	10 kΩ or higher
AF− (A10−4) or A1A− (E6−30) − Body ground AF− (A30−4) or A2A− (E6−31) − Body ground	10 kΩ or higher

Reference (Bank 1 Sensor 1 System Drawing):

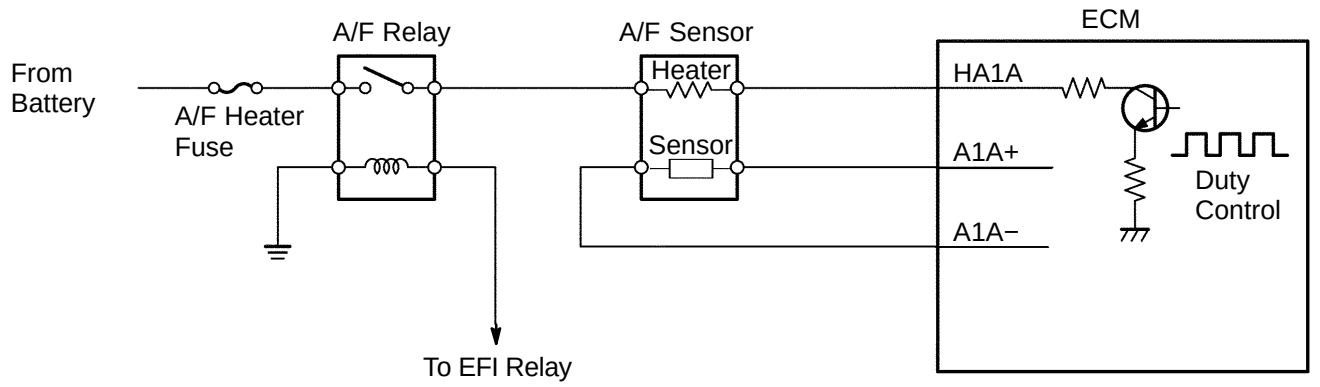

P A23512

NG → **Replace or replace harness or connector.**

OK →

14	**Replace air fuel ratio sensor.**

NEXT →

15	Perform confirmation driving pattern.

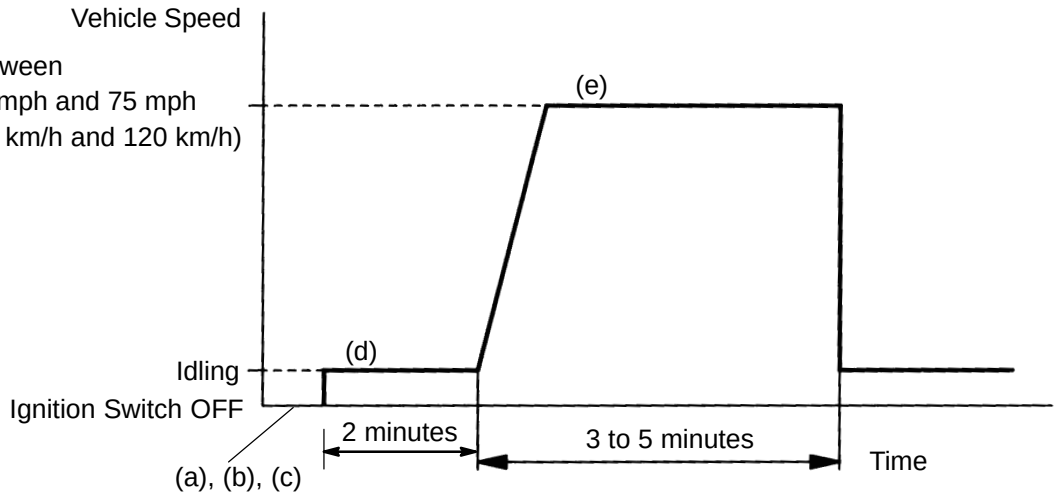

(a) Connect the hand−held tester to the DLC3.
(b) Turn the ignition switch to ON and turn the tester ON.
(c) Clear DTCs (see page DI−462).
(d) Switch the ECM from normal mode to check mode using the tester (see page DI−463).
(e) Start the engine and warm it up with all the accessories switched OFF.
(f) Drive the vehicle at between 38 mph and 75 mph (60 km/h and 120 km/h) and at an engine speed of between 1,400 rpm and 3,200 rpm for 3 to 5 minutes.

HINT:
If the system is still malfunctioning, the MIL will be illuminated during step (e).

NOTICE:
If the conditions in this test are not strictly followed, no malfunction will be detected.

NEXT

16	Check whether DTC output recurs (DTC P0171, P0172, P0174 or P0175)

CHECK:
(a) On the hand−held tester, select the following menu items: DIAGNOSIS / ENHANCED OBD II / DTC INFO / PENDING CODES.
(b) Read DTCs.

RESULT:

Display (DTC Output)	Proceed To
P0171, P0172, P0174 or P0175	A
No output	B

B → **Go to step 5.**

A

END

DIDRI−02

DTC	P0327	Knock Sensor 1 Circuit Low Input (Bank 1 or Single Sensor)

DTC	P0328	Knock Sensor 1 Circuit High Input (Bank 1 or Single Sensor)

DTC	P0332	Knock Sensor 2 Circuit Low Input (Bank 2)

DTC	P0333	Knock Sensor 2 Circuit High Input (Bank 2)

CIRCUIT DESCRIPTION

A flat type knock sensor (non−resonant type) has the structure that can detect the vibration in a wider band of frequency from about 6 kHz to 15 kHz and has the following features.
Knock sensors are fitted on the right bank and left bank of the cylinder block to detect engine knocking. Each knock sensor contains a piezoelectric element which generates voltage when it becomes deformed. Generation of the voltage occurs when the cylinder block vibrates due to knocking. If engine knocking occurs, the ignition timing is retarded in order to suppress the knocking.

DTC No.	DTC Detection Condition	Trouble Area
P0327 P0332	Output voltage of the knock sensor 1 or 2 is 0.5 V or less (1 trip detection logic)	• Short in knock sensor 1 or 2 circuit • Knock sensor 1 or 2 • ECM
P0328 P0333	Output voltage of the knock sensor 1 or 2 is 4.5 V or more (1 trip detection logic)	• Open in knock sensor 1 or 2 circuit • Knock sensor 1 or 2 • ECM

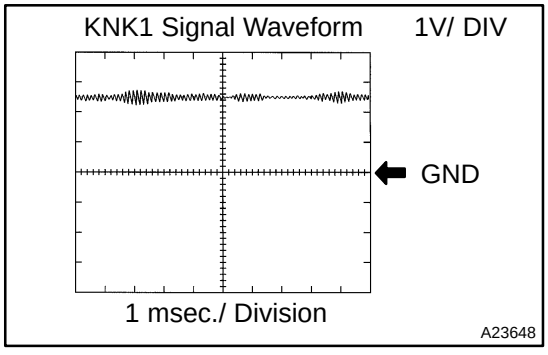

Reference: Inspection using the oscilloscope.
The correct waveform is as shown.

Item	Details
Terminal	KNK1 − EKNK or KNK2 − EKN2
Equipment Settings	0.01 to 10 V/Division, 0.01 to 10 msec./Division
Condition	After warming up the engine, keep the engine speed at 4,000 rpm.

MONITOR DESCRIPTION

The knock sensor located on the cylinder block detects spark knock.
When spark knock occurs, the sensor pick−up vibrates in a specific frequency range. When the ECM detects the voltage in this frequency range, it retards the ignition timing to suppress the spark knock.
If there is a defect in the knock sensor or an open or short circuit, the voltage level will deviate outside the normal operating range. The ECM interprets this deviation as a defect in the knock sensor and sets a DTC.
Example:
When the knock sensor voltage output is less than 0.5 V, or more than 4.5 V, and if either the condition continues for more than 3 sec.

MONITOR STRATEGY

Related DTCs	P0327	Knock sensor (Bank 1) range check (Low voltage)
	P0328	Knock sensor (Bank 1) range check (High voltage)
	P0332	Knock sensor (Bank 2) range check (Low voltage)
	P0333	Knock sensor (Bank 2) range check (High voltage)
Required sensors/components	Main sensors/components	Knock sensor
	Related sensors/components	Crankshaft position sensor, Camshaft position sensor, Engine coolant temperature sensor, Mass air flow meter
Frequency of operation	Continuous	
Duration	1 sec.	
MIL operation	Immediate	
Sequence of operation	None	

TYPICAL ENABLING CONDITIONS

Item	Specification	
	Minimum	Maximum
The monitor will run whenever this DTC is not present	See page DI−437	
Battery voltage	10.5 V	−
Time after engine start	5 sec.	−
Ignition switch	ON	
Starter	OFF	

TYPICAL MALFUNCTION THRESHOLDS

Detection Criteria	Threshold
Knock sensor range check (Low voltage) P0327, P0332:	
Knock sensor voltage	Less than 0.5 V
Knock sensor range check (High voltage) P0328, P0333:	
Knock sensor voltage	More than 4.5 V

WIRING DIAGRAM

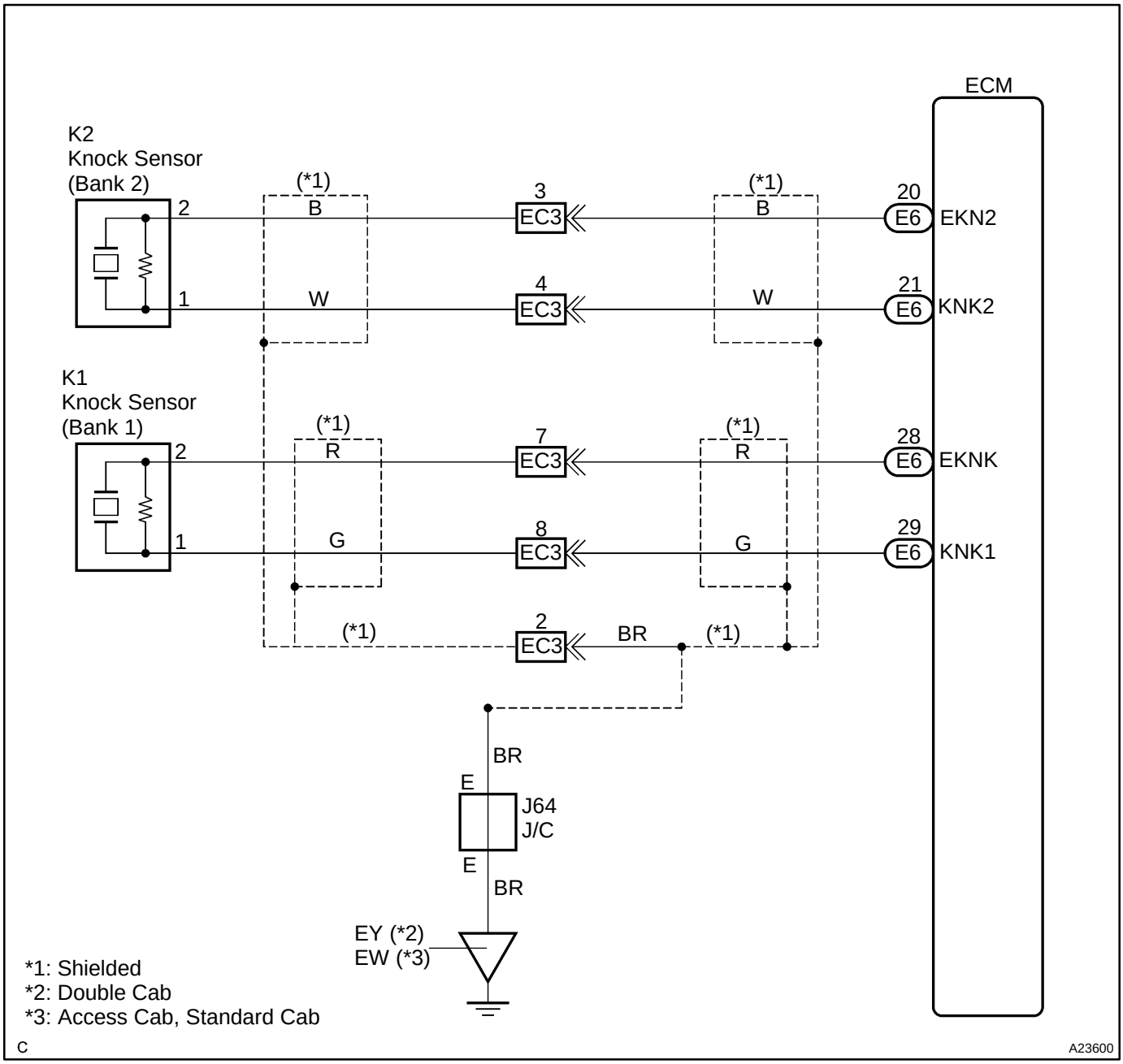

INSPECTION PROCEDURE

HINT:

- DTC P0325, P0327 and P0328 are for the bank 1 knock sensor circuit.
- DTC P0330, P0332 and P0333 are for the bank 2 knock sensor circuit.
- Read freeze frame data using the hand−held tester. Freeze frame data records the engine conditions when a malfunction is detected. When troubleshooting, freeze frame data can help determine if the vehicle was running or stopped, if the engine was warmed up or not, if the air−fuel ratio was lean or rich, and other data from the time the malfunction occurred.

1	**Connect hand−held tester, and check knock sensor circuit.**

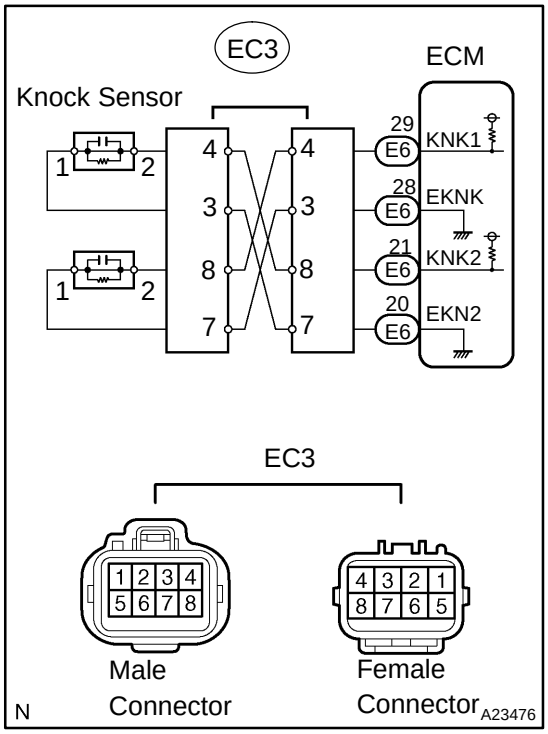

PREPARATION:

(a) Disconnect the EC3 connector.

(b) Using lead wires, connect the EC3 connectors as follows.

Male Connector − Female Connector
Terminal 4 − Terminal 8
Terminal 3 − Terminal 7
Terminal 8 − Terminal 4
Terminal 7 − Terminal 3

(c) Warm up the engine.

(d) Run the engine at 3,000 rpm for 10 seconds or more.

CHECK:

(a) Connect the hand−held tester to the DLC3.

(b) Turn the ignition switch to ON and turn the hand−held tester ON.

(c) Select the item: DIAGNOSIS / ENHANCED OBD II / DTC INFO / CURRENT CODES.

(d) Read DTCs.

Result :

Display	Proceed to
DTCs same as when vehicle brought in P0325, P0327, P0328 → P0325, P0327, P0328 or P0330, P0332, P0333 → P0330, P0332, P0333	A
DTC different from when vehicle brought in P0325 → P0330 or P0330 → P0325	B
DTCs different from when vehicle brought in P0327, P0328 → P0332, P0333 or P0332, P0333 → P0327, P0328	C

(e) Reconnect the EC3 connector.

B	**Go to step 4.**
C	**Go to step 5.**

A

2	**Check for open and short in harness and connector between EC3 connector and ECM (See page IN−30).**

NG → **Repair or replace harness or connector.**

OK

3	**Measure voltage between terminals KNK1 and EKNK, KNK2 and EKN2 of ECM.**

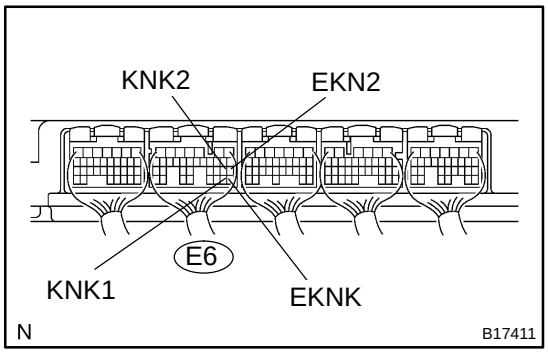

PREPARATION:

(a) Disconnect the E6 ECM connector.

(b) Turn the ignition switch to ON.

CHECK:

(a) Measure the voltage between the specified ECM terminals.

OK:

Standard:

Tester Connection	Specified Condition
KNK1 (E6−29) − EKNK (E6−28)	4.5 to 5.5 V
KNK2 (E6−21) − EKN2 (E6−20)	4.5 to 5.5 V

(b) Reconnect the ECM connector.

NG → **Replace ECM (See page SF−82).**

OK

Check for intermittent problems (See page DI−430).

4	**Check knock sensor installation.**

CHECK:

Check the knock sensor installation.

OK:

Torque: 20 N·m (204 kgf·cm, 15 ft·lbf)

NG → **Tighten the sensor.**

OK

Replace knock sensor (See page SF−68).

5	**Check knock sensor.**

Wire Harness Side:

Male Connector

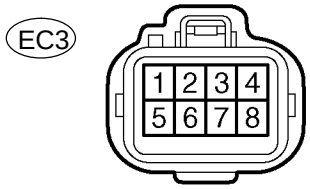

Front View

A23513

PREPARATION:

(a) Disconnect the EC3 connector.

CHECK:

(a) Check the resistance between the terminals of the EC3 male connector.

OK:

Standard:

Tester Connection	Specified Condition
EC3 male connector 3 −4	120 to 280 kΩ
EC3 male connector 7 − 8	120 to 280 kΩ

(b) Reconnect the EC3 connector.

OK → **Check for intermittent problems (See page DI−430).**

NG

6	**Check for open and short in harness and connector between EC3 connector and knock sensor (See page IN−30).**

HINT:

- If DTC P0327 or P0328 has changed to P0332 or P0333, check the knock sensor circuit on the right bank side.
- If DTC P0332 or P0333 has changed to P0327 or P0328, check the knock sensor circuit on the left bank side.

NG → **Repair or replace harness or connector.**

OK

Replace knock sensor.

DIDRK−01

DTC	P0340	Camshaft Position Sensor ”A” Circuit

DTC	P0341	Camshaft Position Sensor ”A” Circuit Range/Performance

DTC	P0345	Camshaft Position Sensor ”A” Circuit (Bank 2)

DTC	P0346	Camshaft Position Sensor ”A” Circuit Range/Performance (Bank 2)

CIRCUIT DESCRIPTION

The camshaft position sensor consists of a magnet, an iron core and a pick−up coil. This sensor monitors a timing rotor located on the camshaft and is used by the ECM to detect the camshaft angle. The camshaft rotation synchronizes with the crankshaft rotation, and this sensor communicates the rotation of the camshaft timing rotor as a pulse signal to the ECM. Based on the signal, the ECM controls fuel injection time and ignition timing.

If there is no signal from the camshaft position sensor even though the engine is turning or the rotation of the camshaft and the crankshaft is not synchronized, the ECM interprets this as a malfunction in the sensor and sets a DTC.

DTC No.	DTC Detection Condition	Trouble Area
P0340 P0345	No camshaft position sensor signal to ECM during cranking (2 trip detection logic)	• Open or short in camshaft position sensor circuit • VVT sensor • Camshaft • Jumping teeth of timing belt • ECM
	No camshaft position sensor signal to ECM with engine speed 600 rpm or more (1 trip detection logic)	
P0341 P0346	While crankshaft rotates twice, camshaft position sensor signal will be input to ECM 12 times or more (1 trip detection logic) • Hint: Under normal condition, the camshaft position signal is input into the ECM 3 times per 2 engine revolutions	

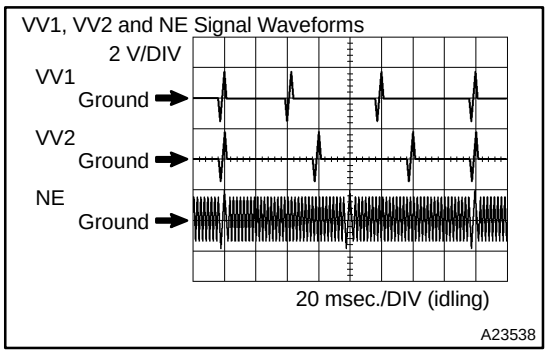

Reference: Inspection using the oscilloscope.
The correct waveform is as shown.

Tester Connection	Specified Condition
G2+ (E5−27) − G2− (E5−32)	Correct waveform is as shown
NE+ (E5−25) − NE− (E5−24)	

MONITOR DESCRIPTION

If there are no signals from the camshaft position sensor even though the engine is turning, or if the rotation of the camshaft and the crankshaft is not synchronized, the ECM interprets this as a malfunction of the sensor.

MONITOR STRATEGY

Related DTCs	P0340	VVT sensor (Bank 1) range check or rationality
	P0341	VVT sensor (Bank 1) range check or rationality
	P0345	VVT sensor (Bank 2) range check or rationality
	P0346	VVT sensor (Bank 2) range check or rationality
Required sensors/components	Main sensors/components	VVT sensor
	Related sensors/components	Crankshaft position sensor, Engine speed sensor
Frequency of operation	Continuous	
Duration	P0340, P0345 case 1: 4 sec. P0340, P0345 case 2: 5 sec. P0341, P0346: 720°CA	
MIL operation	P0340, P0345 case 1: 2 driving cycles P0340, P0345 case 2, P0341, P0346: Immediate	
Sequence of operation	None	

TYPICAL ENABLING CONDITIONS

Item	Specification	
	Minimum	Maximum
The monitor will run whenever this DTC is not present	See page DI−437	
P0340, P0345 Case 1:		
Starter	ON	
Minimum battery voltage while starter ON	−	11 V
P0340, P0345 Case 2:		
Engine RPM	600 rpm	−
Starter	OFF	
Battery voltage	8 V	−
Ignition switch	ON	
P0341, P0346:		
Starter	After OFF to ON timing	
Engine revolution	720°CA	

TYPICAL MALFUNCTION THRESHOLDS

Detection Criteria	Threshold
P0340, P0345 Case 1:	
VVT sensor signal	No signal
P0340, P0345 Case 2:	
VVT sensor signal	No signal
P0341, P0346:	
VVT sensor count	12 or more / 720°CA (= Engine 2 revolutions)

COMPONENT OPERATING RANGE

Parameter	Standard Value
VVT sensor signal input during every 720°CA	3

WIRING DIAGRAM

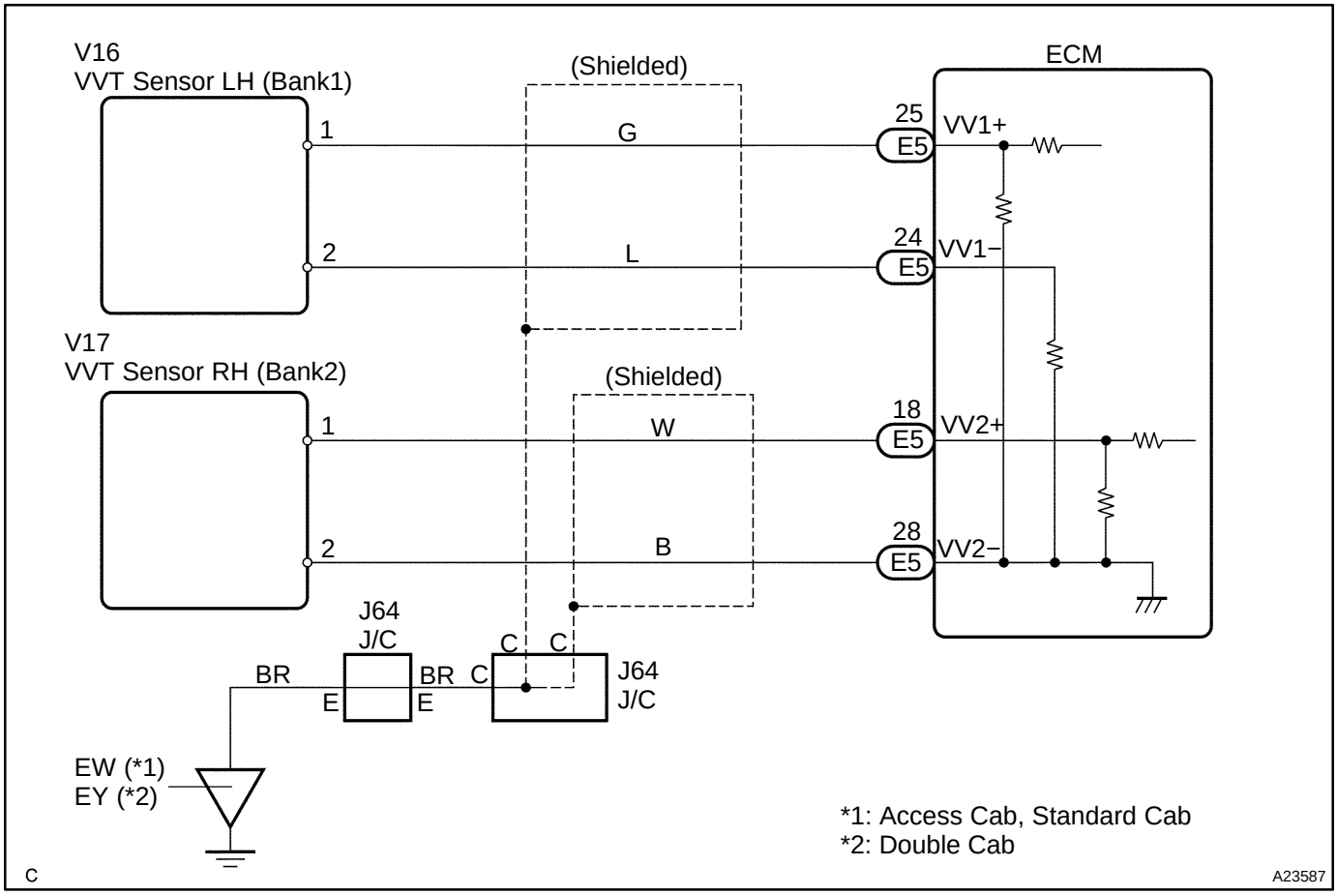

INSPECTION PROCEDURE

HINT:

Read freeze frame data using the hand−held tester. Freeze frame data records the engine conditions when a malfunction is detected. When troubleshooting, freeze frame data can help determine if the vehicle was running or stopped, if the engine was warmed up or not, if the air−fuel ratio was lean or rich, as well as other data from the time when a malfunction occurred.

1	**Inspect resistance of VVT sensor (See page SF−78).**

NG → **Replace VVT sensor (See page SF−79).**

OK

2	**Check for open and short in harness and connector between ECM and VVT sensor.**

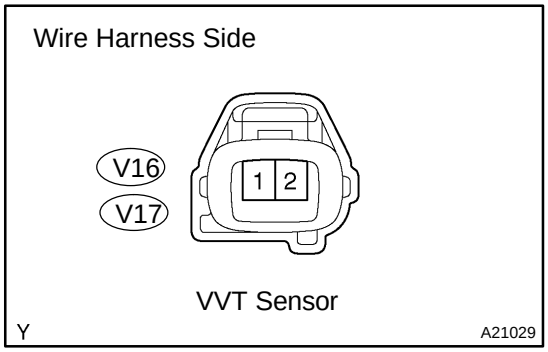

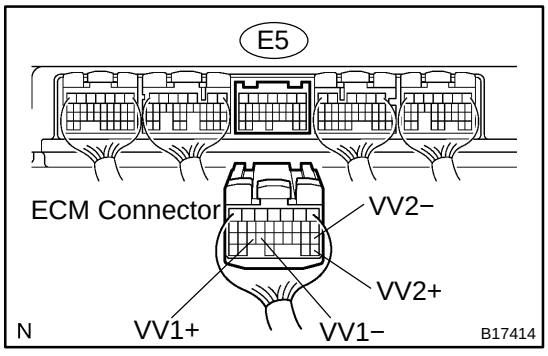

PREPARATION:

(a) Disconnect the VVT sensor connector.

(b) Disconnect the E5 ECM connector.

CHECK:

Measure the resistance between the wire harness side connectors.

OK:

Standard:

Tester Connection	Specified Condition
VVT sensor (V16−1) − VV1+ (E5−25)	Below 1 Ω
VVT sensor (V16−2) − VV1− (E5−24)	Below 1 Ω
VVT sensor (V17−1) − VV2+ (E5−18)	Below 1 Ω
VVT sensor (V17−2) − VV2− (E5−28)	Below 1 Ω
VVT sensor (V16 −1) or VV1+ (E5−25) − Body ground	10 kΩ or higher
VVT sensor (V16−2) or VV1− (E5−24) − Body ground	10 kΩ or higher
VVT sensor (V17 −1) or VV2+ (E5−18) − Body ground	10 kΩ or higher
VVT sensor (V17−2) or VV2− (E5−28) − Body ground	10 kΩ or higher

NG → **Repair or replace harness or connector.**

OK

3	Check sensor installation (VVT sensor).

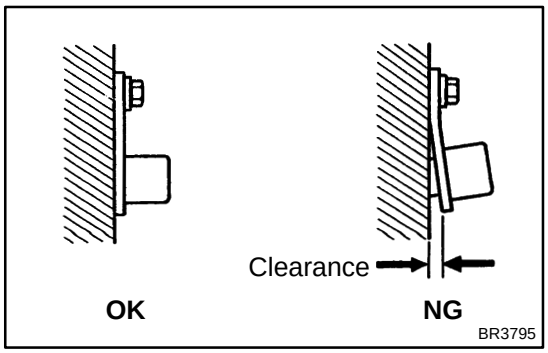

CHECK:
Check the VVT sensor installation.
OK:
The VVT sensor is installed properly.

NG → **Tighten sensor installation bolt.**

OK

4	Inspect teeth of camshaft.

PREPARATION:
Remove the cylinder head cover (See page EM−36).
CHECK:
Check the tooth of the camshaft.

NG → **Replace camshaft.**

OK

Replace ECM.

DICN4−02

DTC	P0351	Ignition Coil ”A” Primary/Secondary Circuit

DTC	P0352	Ignition Coil ”B” Primary/Secondary Circuit

DTC	P0353	Ignition Coil ”C” Primary/Secondary Circuit

DTC	P0354	Ignition Coil ”D” Primary/Secondary Circuit

DTC	P0355	Ignition Coil ”E” Primary/Secondary Circuit

DTC	P0356	Ignition Coil ”F” Primary/Secondary Circuit

DTC	P0357	Ignition Coil ”G” Primary/Secondary Circuit

DTC	P0358	Ignition Coil ”H” Primary/Secondary Circuit

HINT:

- These DTCs indicate a malfunction related to primary circuit.
- If DTC P0351 is displayed, check No. 1 ignition coil with igniter circuit.
- If DTC P0352 is displayed, check No. 2 ignition coil with igniter circuit.
- If DTC P0353 is displayed, check No. 3 ignition coil with igniter circuit.
- If DTC P0354 is displayed, check No. 4 ignition coil with igniter circuit.
- If DTC P0355 is displayed, check No. 5 ignition coil with igniter circuit.
- If DTC P0356 is displayed, check No. 6 ignition coil with igniter circuit.
- If DTC P0357 is displayed, check No. 7 ignition coil with igniter circuit.
- If DTC P0358 is displayed, check No. 8 ignition coil with igniter circuit.

CIRCUIT DESCRIPTION

These DTCs indicate a malfunction related to primary circuit.

The DIS is a 1−cylinder ignition system which ignites one cylinder with one ignition coil. In the 1−cylinder ignition system, the one spark plug is connected to the end of the secondary winding. High voltage generated in the secondary winding is applied directly to the spark plug. The spark of the spark plug passes from the center electrode to the ground electrode.

The ECM determines the ignition timing and outputs the ignition signals (IGTs) for each cylinder. Using the IGT, the ECM turns on and off the power transistor inside the igniter and this switches on and off the current to the primary coil. When the current to the primary coil is cut off, high−voltage is generated in the secondary coil and this voltage is applied to the spark plugs to create sparks inside the cylinders. As the ECM cuts the current to the primary coil, the igniter sends back the ignition confirmation signal (IGF) for each cylinder ignition to the ECM.

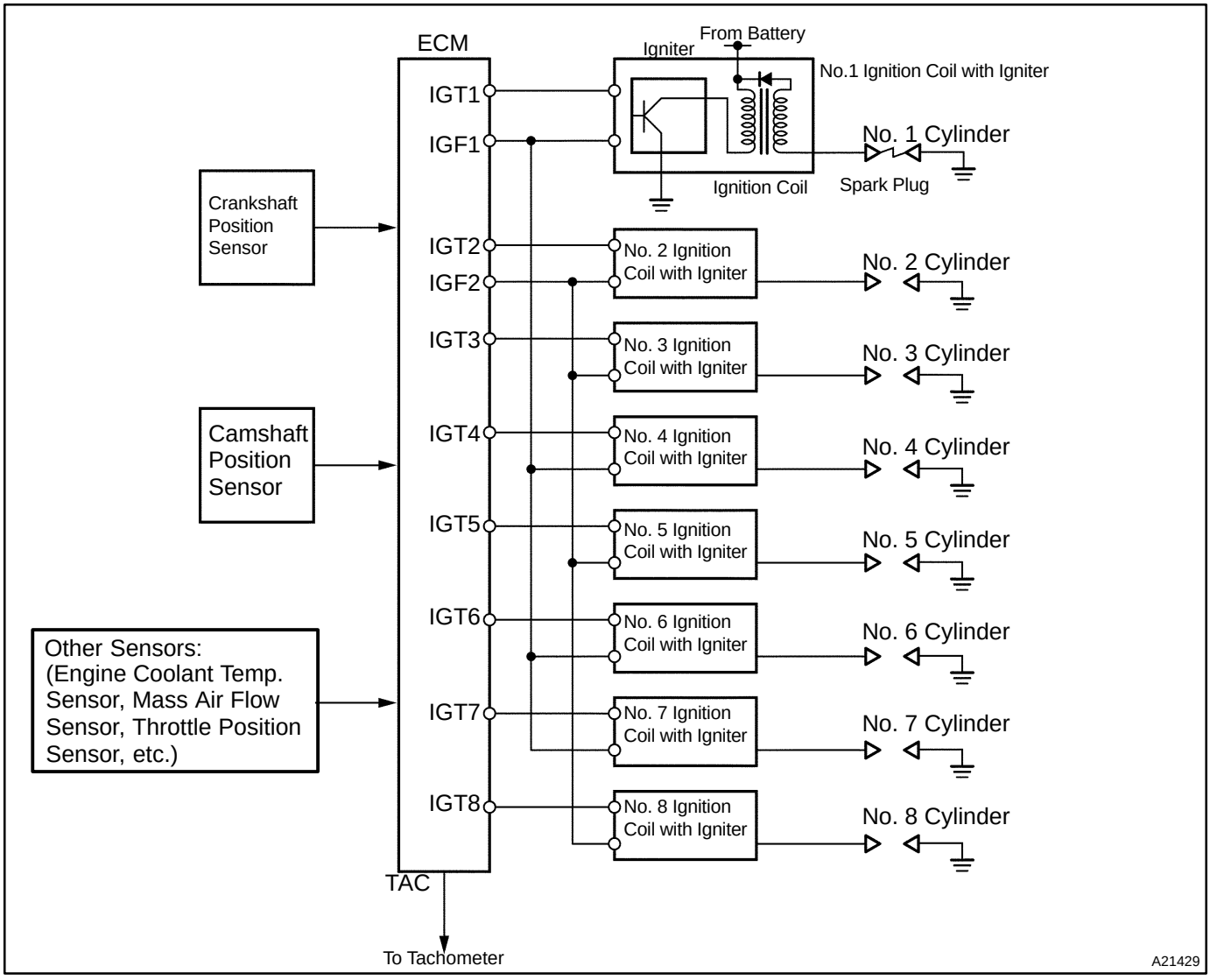

DTC No.	DTC Detecting Condition	Trouble Area
P0351 P0352 P0353 P0354 P0355 P0356 P0357 P0358	No IGF signal to ECM while engine is running	• Open or short in IGF1 or IGF2 and IGT1 to IGT8 circuit from ignition coil with igniter to ECM • No. 1 to No. 8 ignition coil with igniter (primary ignition) • Ignition system • ECM

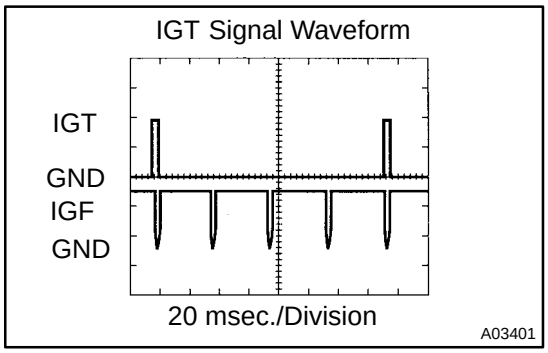

Reference: Inspection using the oscilloscope.
During cranking or idling, check the waveform between terminals IG1 to IG8 and E1, and IGF1, IGF2 and E1 of the E5 and E7 ECM connectors.

MONITOR DESCRIPTION

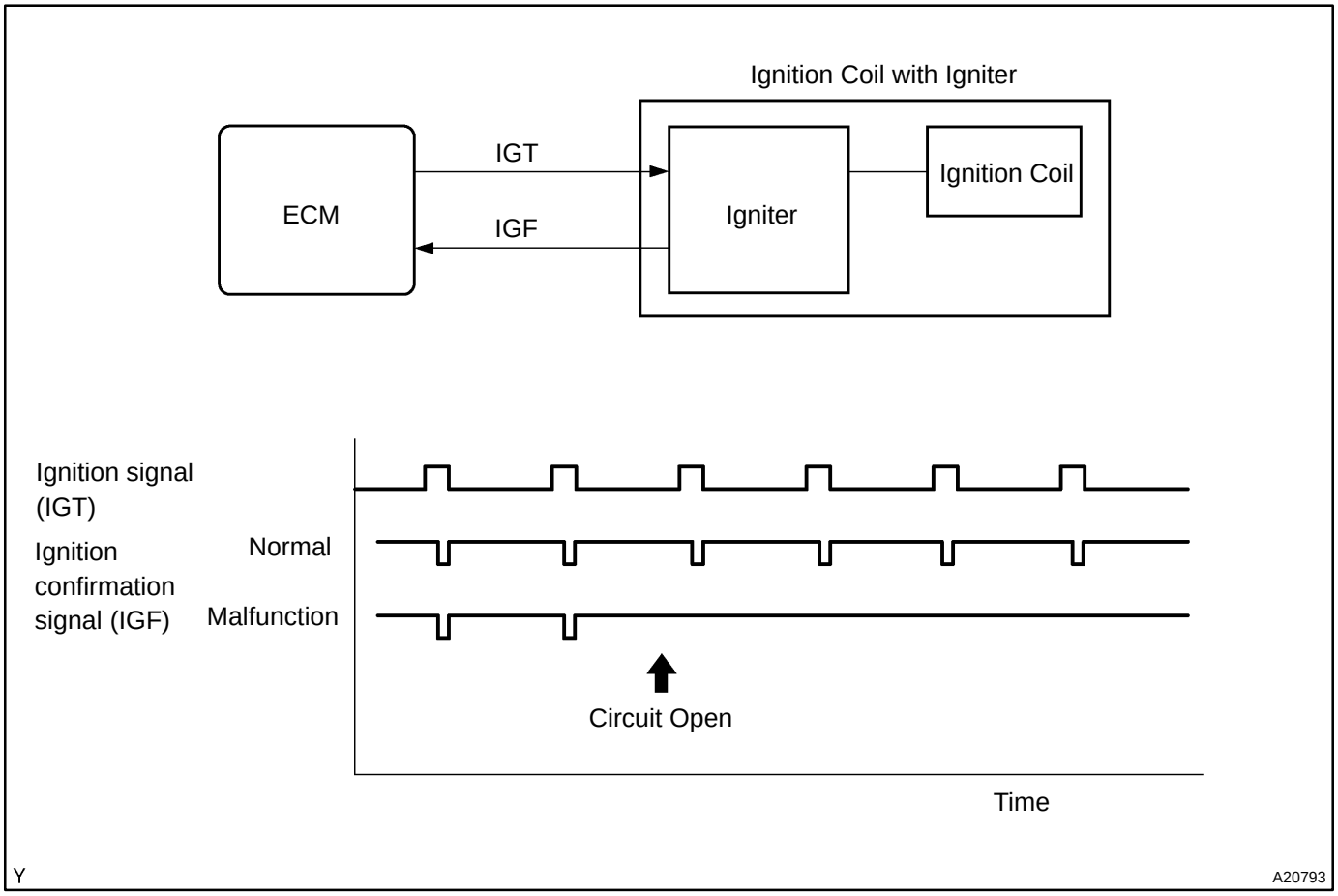

If the ECM does not receive the IGF after sending the IGT it interprets this as a fault in the igniter and sets a DTC.

MONITOR STRATEGY

Related DTCs	P0351	No. 1 ignition coil with igniter circuit malfunction
	P0352	No. 2 ignition coil with igniter circuit malfunction
	P0353	No. 3 ignition coil with igniter circuit malfunction
	P0354	No. 4 ignition coil with igniter circuit malfunction
	P0355	No. 5 ignition coil with igniter circuit malfunction
	P0356	No. 6 ignition coil with igniter circuit malfunction
	P0357	No. 7 ignition coil with igniter circuit malfunction
	P0358	No. 8 ignition coil with igniter circuit malfunction
Required sensors/components	Igniter	
Frequency of operation	Continuous	
Duration	0.256 sec. + 4 sparks	
MIL operation	Immediate	
Sequence of operation	None	

TYPICAL ENABLING CONDITIONS

Item	Specification	
	Minimum	Maximum
The monitor will run whenever these DTCs are not present	See page DI−437	
Either of the following conditions is met:	Condition 1 or 2	
1. Engine speed	−	1,500 rpm
2. Starter	OFF	
Either of the following conditions is met:	Condition (a) or (b)	
(a) All of the following conditions are met	−	
Engine speed	−	500 rpm
Battery voltage	6 V	−
(b) All of the following conditions are met	−	
Engine speed	500 rpm	−
Battery voltage	10 V	−
Number of sparks after CPU is reset	5 sparks	−

TYPICAL MALFUNCTION THRESHOLDS

Detection Criteria	Threshold
”Ignition signal fail count”	More than 2 times
”Ignition signal fail count” is on the right:	When IGF does not return despite sending IGT.

COMPONENT OPERATING RANGE

Standard Value
Confirmed signal number = ignition signal number

WIRING DIAGRAM

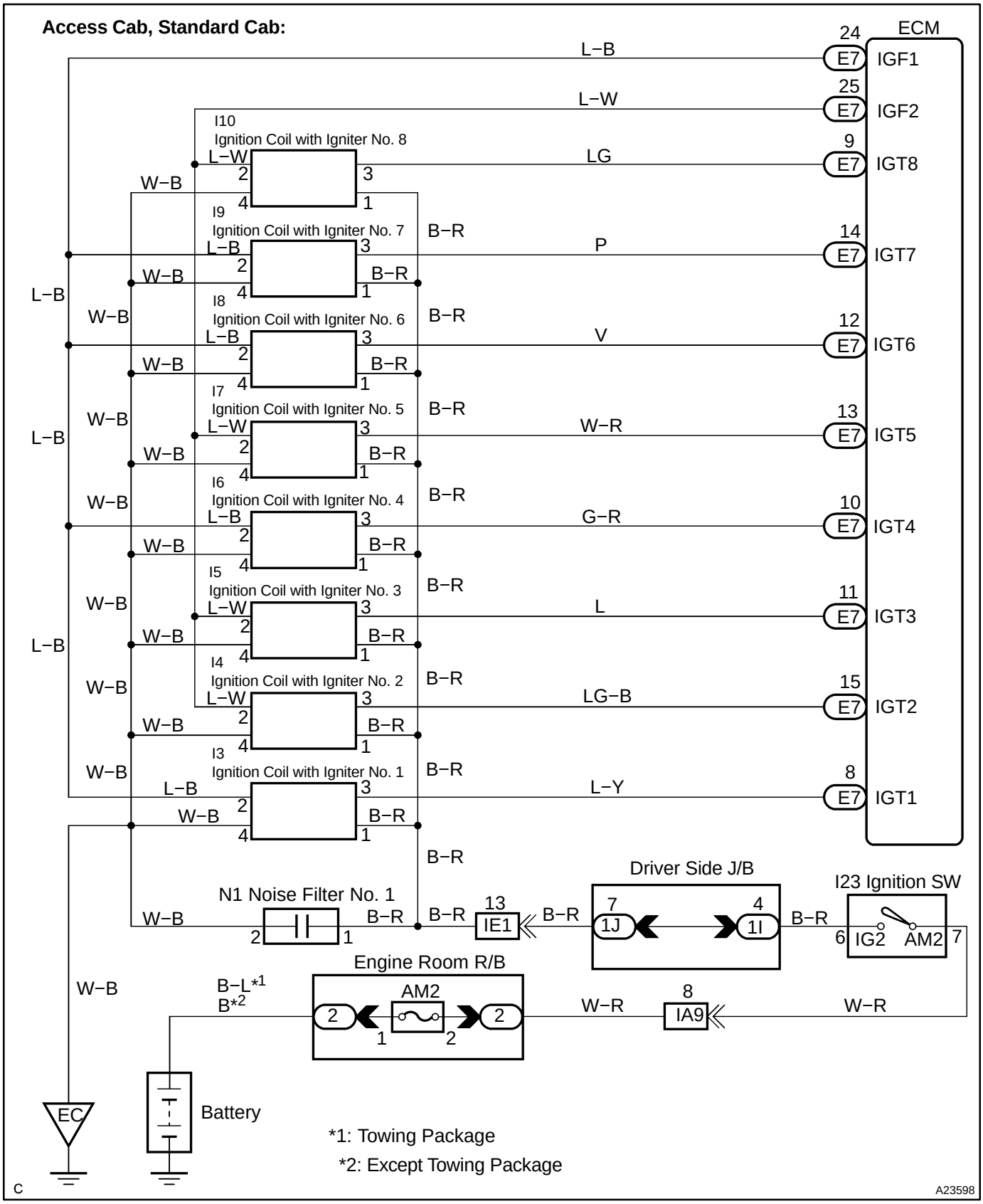

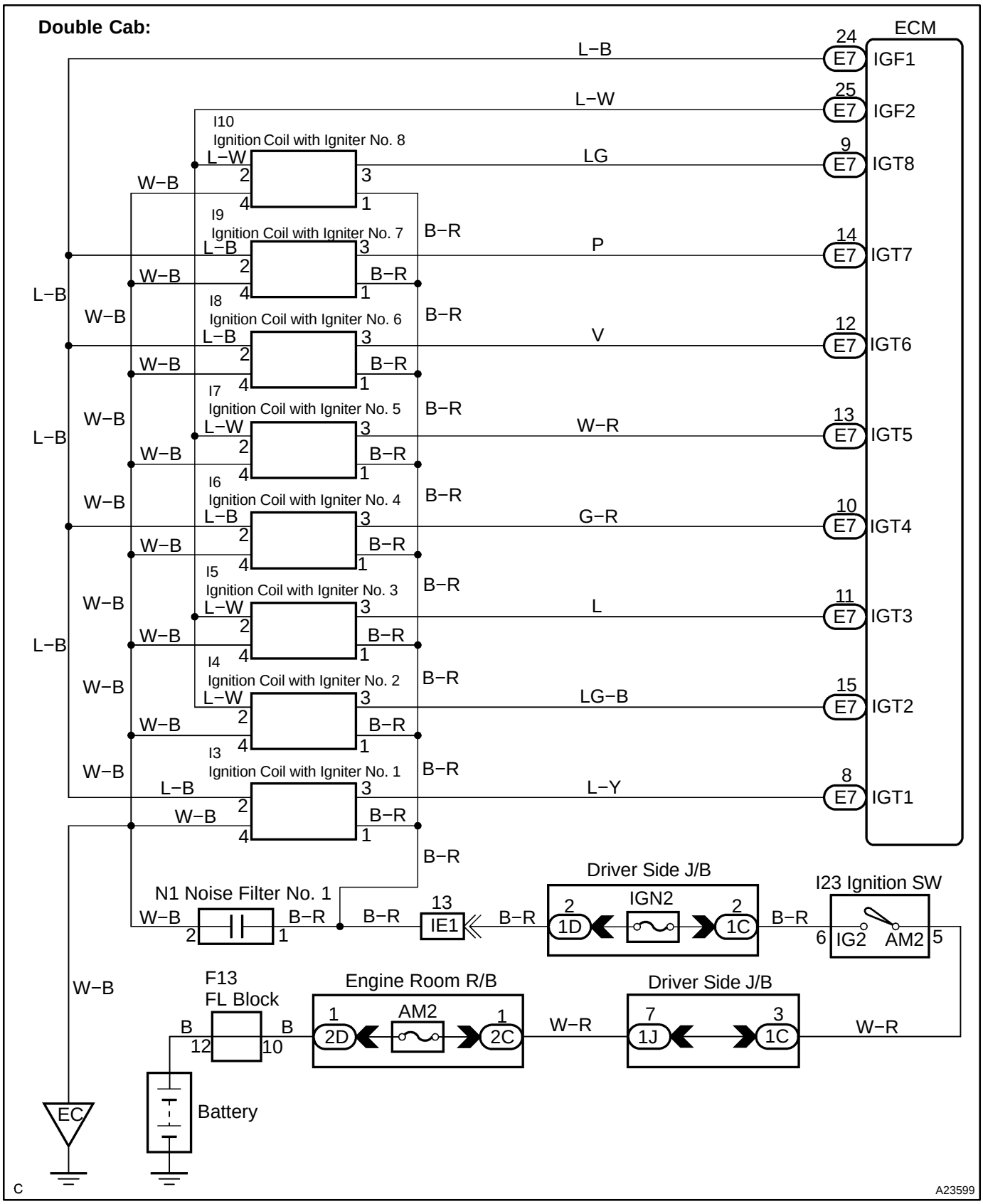
Double Cab:
ECM
24
E7
IGF1
L−B
25
E7
IGF2
L−W
I10
Ignition Coil with Igniter No. 8
9
E7
IGT8
LG
I9
Ignition Coil with Igniter No. 7
14
E7
IGT7
P
I8
Ignition Coil with Igniter No. 6
12
E7
IGT6
V
I7
Ignition Coil with Igniter No. 5
13
E7
IGT5
W−R
I6
Ignition Coil with Igniter No. 4
10
E7
IGT4
G−R
I5
Ignition Coil with Igniter No. 3
11
E7
IGT3
L
I4
Ignition Coil with Igniter No. 2
15
E7
IGT2
LG−B
I3
Ignition Coil with Igniter No. 1
8
E7
IGT1
L−Y
W−B
B−R
N1 Noise Filter No. 1
13
IE1
Driver Side J/B
IGN2
1D
1C
I23 Ignition SW
IG2
AM2
F13
FL Block
Engine Room R/B
AM2
2D
2C
Driver Side J/B
1J
1C
Battery
EC
C
A23599

INSPECTION PROCEDURE

HINT:

- If DTCs P0351, P0354, P0356 and P0357 are output simultaneously, IGF1 circuit may be open or short.
- If DTCs P0352, P0353, P0355 and P0358 are output simultaneously, IGF2 circuit may be open or short.
- Read freeze frame data using the hand−held tester. Freeze frame data records the engine conditions when a malfunction is detected. When troubleshooting, freeze frame data can help determine if the vehicle was running or stopped, if the engine was warmed up or not, if the air−fuel ratio was lean or rich, as well as other data from the time when a malfunction occurred.

1	**Check spark plug and spark (See page IG−1).**

NG → **Go to step 4.**

OK

2	**Check for open and short in harness and connector in IGF signal circuits between ECM and ignition coil with igniter.**

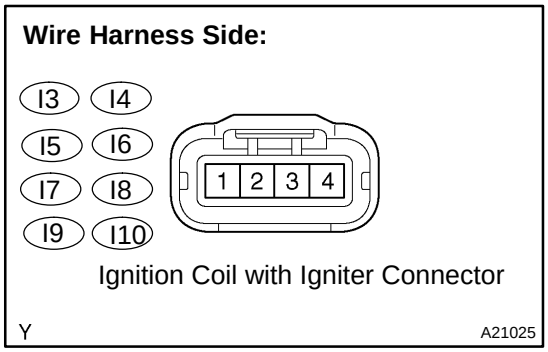

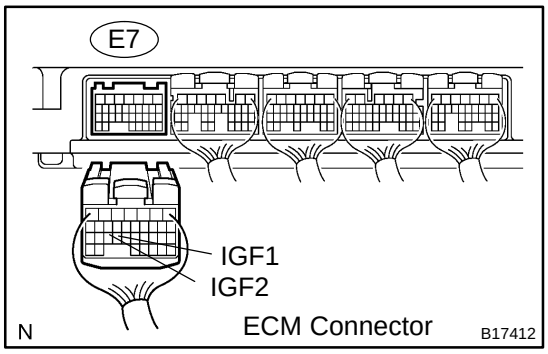

PREPARATION:

(a) Disconnect the I3, I4, I5, I6, I7, I8, I9 or I10 ignition coil will igniter connector.

(b) Disconnect the E7 ECM connector.

CHECK:

Check the resistance between the wire harness side connectors.

OK:

Standard:

Tester Connection	Specified Condition
Ignition coil (I3−2) − IGF1 (E7−24)	Below 1 Ω
Ignition coil (I4−2) − IGF2 (E7−25)	Below 1 Ω
Ignition coil (I5−2) − IGF1 (E7−24)	Below 1 Ω
Ignition coil (I6−2) − IGF2 (E7−25)	Below 1 Ω
Ignition coil (I7−2) − IGF1 (E7−24)	Below 1 Ω
Ignition coil (I8−2) − IGF2 (E7−25)	Below 1 Ω
Ignition coil (I9−2) − IGF1 (E7−24)	Below 1 Ω
Ignition coil (I10−2) − IGF2 (E7−25)	Below 1 Ω
Ignition coil (I3−2) or IGF1 (E7−24) − Body ground	10 kΩ or higher
Ignition coil (I4−2) or IGF2 (E7−25) − Body ground	10 kΩ or higher
Ignition coil (I5−2) or IGF1 (E7−24) − Body ground	10 kΩ or higher
Ignition coil (I6−2) or IGF2 (E7−25) − Body ground	10 kΩ or higher
Ignition coil (I7−2) or IGF1 (E7−24) − Body ground	10 kΩ or higher
Ignition coil (I8−2) or IGF2 (E7−25) − Body ground	10 kΩ or higher
Ignition coil (I9−2) or IGF1 (E7−24) − Body ground	10 kΩ or higher
Ignition coil (I10−2) or IGF2 (E7−25) − Body ground	10 kΩ or higher

NG → **Repair or replace harness or connector.**

OK

3	**Disconnect ignition coil with igniter connector, and check voltage between terminals IGF1, IGF2 and E1 of ECM connector.**

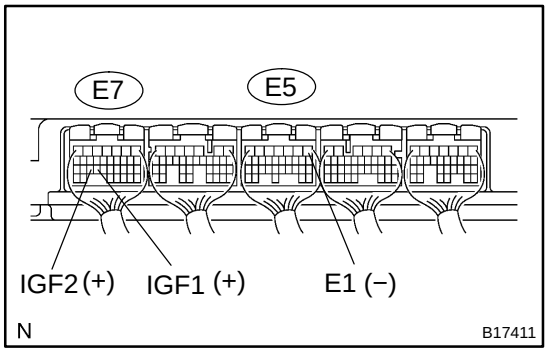

PREPARATION:

(a) Disconnect the I3, I4, I5, I6, I7, I8, I9 or I10 ignition coil with igniter connector.

(b) Turn the ignition switch ON.

CHECK:

Measure the voltage between the E7 and E5 ECM connectors.

OK:

Standard:

Tester Connection	Specified Condition
IGF1 (E7−24) − E1 (E5−1)	4.5 to 5.5 V
IGF2 (E7−25) − E1 (E5−1)	4.5 to 5.5 V

NG → **Replace ECM (See page SF−82).**

OK

Replace ignition coil with igniter.

4	**Check for open and short in harness and connector in IGT signal circuit between ECM and ignition coil with igniter.**

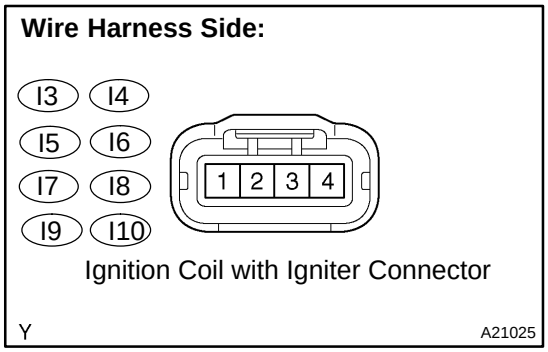

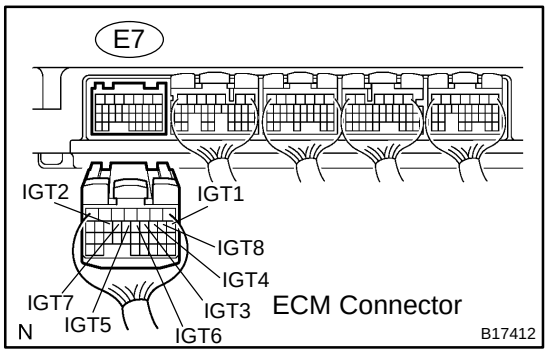

PREPARATION:

(a) Disconnect the I3, I4, I5, I6, I7, I8, I9 or I10 ignition coil connector.

(b) Disconnect the E7 ECM connector.

CHECK:

Check the resistance between the wire harness side connectors.

OK:

Standard:

Tester Connection	Specified Condition
Ignition coil (I3−2) − IGT1 (E7−8)	Below 1 Ω
Ignition coil (I4−2) − IGT2 (E7−15)	Below 1 Ω
Ignition coil (I5−2) − IGT3 (E7−11)	Below 1 Ω
Ignition coil (I6−2) − IGT4 (E7−10)	Below 1 Ω
Ignition coil (I7−2) − IGT5 (E7−13)	Below 1 Ω
Ignition coil (I8−2) − IGT6 (E7−12)	Below 1 Ω
Ignition coil (I9−2) − IGT7 (E7−14)	Below 1 Ω
Ignition coil (I10−2) − IGT8 (E7−9)	Below 1 Ω
Ignition coil (I3−2) or IGT1 (E7−8) − Body ground	10 kΩ or higher
Ignition coil (I4−2) or IGT2 (E7−15) − Body ground	10 kΩ or higher
Ignition coil (I5−2) or IGT3 (E7−11) − Body ground	10 kΩ or higher
Ignition coil (I6−2) or IGT4 (E7−10) − Body ground	10 kΩ or higher
Ignition coil (I7−2) or IGT5 (E7−13) − Body ground	10 kΩ or higher
Ignition coil (I8−2) or IGT6 (E7−12) − Body ground	10 kΩ or higher
Ignition coil (I9−2) or IGT7 (E7−14) − Body ground	10 kΩ or higher
Ignition coil (I10−2) or IGT8 (E7−9) − Body ground	10 kΩ or higher

NG → **Repair or replace harness or connector.**

OK

5	Check voltage between terminals IGT1 − IGT8 and E1 of ECM connector.

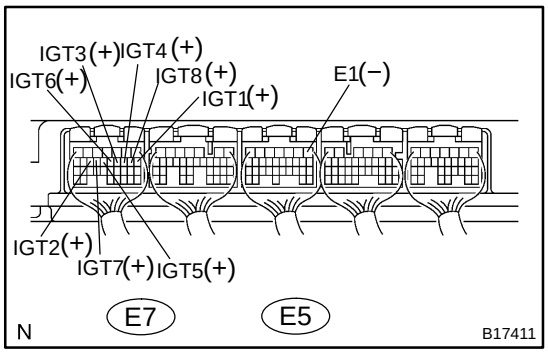

PREPARATION:

Turn the ignition switch to ON.

CHECK:

Measure the voltage between terminals the E7 and E5 ECM connectors when the engine is cranked.

OK:

Standard:

Tester Connection	Specified Condition
IGT1 (E7−8) − E1 (E5−1)	More than 0.1 V or less than 4.5 V
IGT2 (E7−15) − E1 (E5−1)	More than 0.1 V or less than 4.5 V
IGT3 (E7−11) − E1 (E5−1)	More than 0.1 V or less than 4.5 V
IGT4 (E7−10) − E1 (E5−1)	More than 0.1 V or less than 4.5 V
IGT5 (E7−13) − E1 (E5−1)	More than 0.1 V or less than 4.5 V
IGT6 (E7−12) − E1 (E5−1)	More than 0.1 V or less than 4.5 V
IGT7 (E7−14) − E1 (E5−1)	More than 0.1 V or less than 4.5 V
IGT8 (E7−9) − E1 (E5−1)	More than 0.1 V or less than 4.5 V

NG	Replace ECM (See page SF−82).

OK

6	**Disconnect ignition coil with igniter connector, and check voltage between terminals IGT1 − IGT8 and E1 of ECM connector.**

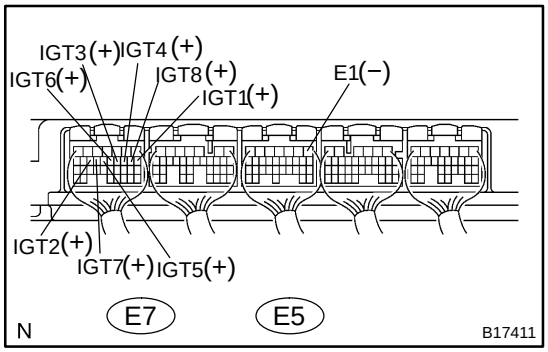

PREPARATION:

(a) Disconnect the I3, I4, I5, I6, I7, I8, I9 or I10 ignition coil with igniter connector.

(b) Turn the ignition switch to ON.

CHECK:

Measure the voltage between terminals the E5 and E7 ECM connectors when the engine is cranked.

OK:

Standard:

Tester Connection	Specified Condition
IGT1 (E7−8) − E1 (E5−1)	4.5 V or more
IGT2 (E7−15) − E1 (E5−1)	4.5 V or more
IGT3 (E7−11) − E1 (E5−1)	4.5 V or more
IGT4 (E7−10) − E1 (E5−1)	4.5 V or more
IGT5 (E7−13) − E1 (E5−1)	4.5 V or more
IGT6 (E7−12) − E1 (E5−1)	4.5 V or more
IGT7 (E7−14) − E1 (E5−1)	4.5 V or more
IGT8 (E7−9) − E1 (E5−1)	4.5 V or more

NG → **Replace ECM (See page SF−82).**

OK →

7	Check ignition coil with igniter power source circuit.

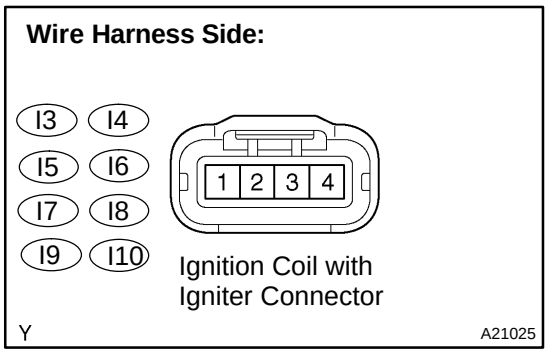

PREPARATION:

(a) Disconnect the I3, I4, I5, I6, I7, I8, I9 or I10 ignition coil with igniter connector.

(b) Turn the ignition switch to ON.

CHECK:

Measure the voltage between the terminal of the wire harness side connector and body ground.

OK:

Standard:

Tester Connection	Specified Condition
I3−1 − Body ground	9 to 14 V
I4−1 − Body ground	
I5−1 − Body ground	
I6−1 − Body ground	
I7−1 − Body ground	
I8−1 − Body ground	
I9−1 − Body ground	
I10−1 − Body ground	

OK → **Repair ignition coil with igniter.**

NG

8	**Check for open and short in harness and connector between ignition switch and ignition coil with igniter.**

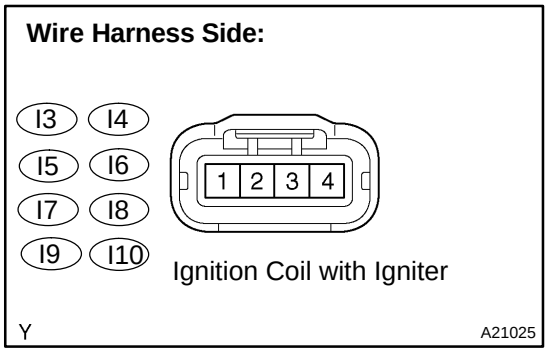

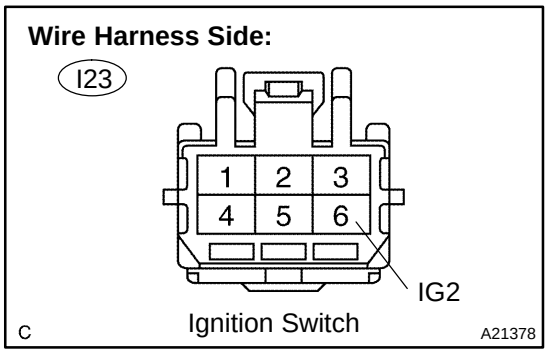

PREPARATION:

(a) Disconnect the I3, I4, I5, I6, I7, I8, I9 or I10 ignition coil with igniter connector.

(b) Disconnect the I23 ignition switch connector.

CHECK:

Measure the resistance between the wire harness side connectors.

OK:

Standard:

Tester Connection	Specified Condition
Ignition coil (I3−1) − IG2 (I23−6)	Below 1 Ω
Ignition coil (I4−1) − IG2 (I23−6)	Below 1 Ω
Ignition coil (I5−1) − IG2 (I23−6)	Below 1 Ω
Ignition coil (I6−1) − IG2 (I23−6)	Below 1 Ω
Ignition coil (I7−1) − IG2 (I23−6)	Below 1 Ω
Ignition coil (I8−1) − IG2 (I23−6)	Below 1 Ω
Ignition coil (I9−1) − IG2 (I23−6)	Below 1 Ω
Ignition coil (I10−1) − IG2 (I23−6)	Below 1 Ω
Ignition coil (I3−1) or IG2 (I23−6) − Body ground	10 kΩ or higher
Ignition coil (I4−1) or IG2 (I23−6) − Body ground	10 kΩ or higher
Ignition coil (I5−1) or IG2 (I23−6) − Body ground	10 kΩ or higher
Ignition coil (I6−1) or IG2 (I23−6) − Body ground	10 kΩ or higher
Ignition coil (I7−1) or IG2 (I23−6) − Body ground	10 kΩ or higher
Ignition coil (I8−1) or IG2 (I23−6) − Body ground	10 kΩ or higher
Ignition coil (I9−1) or IG2 (I23−6) − Body ground	10 kΩ or higher
Ignition coil (I10−1) or IG2 (I23−6) − Body ground	10 kΩ or higher

NG → **Repair or replace harness or connector.**

OK

Replace ignition coil with igniter.

DIDRP−01

DTC	P0450	Evaporative Emission Control System Pressure Sensor/Switch

DTC	P0451	Evaporative Emission Control System Pressure Sensor/Switch Range/Performance

DTC	P0452	Evaporative Emission Control System Pressure Sensor/Switch Low Input

DTC	P0453	Evaporative Emission Control System Pressure Sensor/Switch High Input

DTC SUMMARY

DTC	Monitoring Items	Malfunction Detection Conditions	Trouble Areas	Detection Timings	Detection Logic
P0450	Pressure sensor voltage abnormal fluctuation	Sensor output voltage rapidly fluctuates beyond upper and lower malfunction thresholds for 0.5 seconds.	• Pump module • Connector/Wire harness (Pump module − ECM) • ECM	• EVAP monitoring (ignition OFF) • Ignition ON	1 trip
P0451	Pressure sensor noising	Sensor output voltage fluctuates frequently in certain time period.	• Pump module • Connector/Wire harness (Pump module − ECM) • ECM	• EVAP monitoring (ignition OFF) • Engine running	2 trip
P0451	Pressure sensor stuck	Sensor output voltage does vary in certain time period.	• Pump module • Connector/Wire harness (Pump module − ECM) • ECM	• EVAP monitoring (ignition OFF)	2 trip
P0452	Pressure sensor voltage low	Sensor output voltage is less than 0.45 V for 0.5 seconds.	• Pump module • Connector/Wire harness (Pump module − ECM) • ECM	• Ignition ON • EVAP monitoring (ignition OFF)	1 trip
P0453	Pressure sensor voltage high	Sensor output voltage is more than 4.9 V for 0.5 seconds.	• Pump module • Connector/Wire harness (Pump module − ECM) • ECM	• Ignition ON • EVAP monitoring (ignition OFF)	1 trip

HINT:
The pressure sensor is built into the pump module.

CIRCUIT DESCRIPTION

The circuit description can be found in the EVAP (Evaporative Emission) Inspection Procedure (see page DI−884).

MONITOR DESCRIPTION

Pressure Sensor Specification:

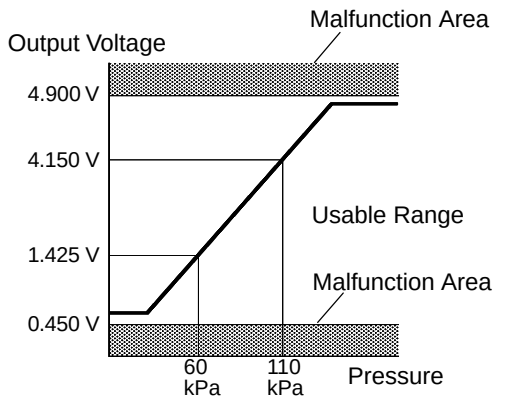

HINT:
Standard atmospheric pressure is 101.3 kPa

(a) DTC P0450: Pressure sensor voltage abnormal fluctuation.
If the pressure sensor voltage output rapidly fluctuates between less than 0.45 V and more than 4.9 V, the ECM interprets this as an open or short circuit malfunction in the pressure sensor or its circuit, and stops the EVAP (Evaporative Emission) system monitor. The ECM then illuminates the MIL and sets the DTC (1 trip detection logic).

(b) DTC P0451: Pressure sensor noising or stuck
If the pressure sensor voltage output fluctuates rapidly for 10 seconds, the ECM stops the EVAP system monitor. The ECM interprets this as noise from the pressure sensor, and stops the EVAP system monitor. The ECM then illuminates the MIL and sets the DTC.
Alternatively, if the sensor voltage output does not change for 10 seconds, the ECM interprets this as the sensor being stuck, and stops the monitor. The ECM then illuminates the MIL and sets the DTC.
(Both the malfunctions are detected by 2 trip detection logic)

(c) DTC P0452: Pressure sensor voltage low
If the pressure sensor voltage output is below 0.45 V, the ECM interprets this as an open or short circuit malfunction in the pressure sensor or its circuit, and stops the EVAP system monitor. The ECM then illuminates the MIL and sets the DTC (1 trip detection logic).

(d) DTC P0453: Pressure sensor voltage high
If the pressure sensor voltage output is 4.9 V or more, the ECM interprets this as an open or short circuit malfunction in the pressure sensor or its circuit, and stops the EVAP system monitor. The ECM then illuminates the MIL and sets the DTC (1 trip detection logic).

MONITOR STRATEGY

Related DTCs	P0450	Evaporative emission control system pressure sensor/switch chattering
	P0451	Evaporative emission control system pressure sensor noise
		Evaporative emission control system pressure sensor stuck
	P0452	Evaporative emission control system pressure sensor/switch low input
	P0453	Evaporative emission control system pressure sensor/switch high input
Required sensors/components	Pump module	
Frequency of operation	Once per driving cycle	
Duration	0.5 sec.: P0450, P0452, P0453 15 sec.: P0451	
MIL operation	Immediate: P0450, P0452, P0453 2 driving cycles: P0451	
Sequence of operation	None	

TYPICAL ENABLING CONDITIONS

Item	Specification	
	Minimum	Maximum
The monitor will run whenever these DTCs are not present	See page DI−437	
Pressure sensor noise:		
Atmospheric pressure	70 to 110 kPa (525 to 825 mmHg)	
Battery voltage	10.5 V	−
IAT	4.4 to 35°C (40 to 95°F)	
EVAP pressure sensor malfunction (P0450, P0452, P0453)	Not detected	
Either of the following conditions is met	Condition 1 or 2	
1. Time after key off	5 or 7 or 9.5 hours	
2. Engine condition	Running	
Pressure sensor stuck:		
Battery voltage	10.5 V	−
IAT	4.4 to 35°C (40 to 95°F)	
EVAP pressure sensor malfunction (P0450, P0452, P0453)	Not detected	
Atmospheric pressure	Less than 70 kPa (525 mmHg), or 110 kPa (825 mmHg) or more	
Time after engine stopped	5 or 7 or 9.5 hours	
Pressure sensor chattering, low/high voltage:		
Battery voltage	8 V	−
Ignition switch	ON	
Starter	OFF	

TYPICAL MALFUNCTION THRESHOLDS

Detection Criteria	Threshold
Pressure sensor noise:	
Frequency that EVAP pressure change is 0.3 kPa or more	10 times or more for 10 sec.
Pressure sensor stuck:	
EVAP pressure change during reference pressure measurement	Less than 0.65 kPa (4.9 mmHg)
Pressure sensor chattering:	
EVAP pressure	Less than 42.11 kPa (315.90 mmHg), or more than 123.761 kPa (928.440 mmHg)
Pressure sensor low voltage:	
EVAP pressure	Less than 42.11 kPa (315.90 mmHg)
Pressure sensor high voltage:	
EVAP pressure	More than 123.761 kPa (928.440 mmHg)

INSPECTION PROCEDURE

NOTICE:

- **When a vehicle is brought into the workshop, leave it as it is. Do not change the vehicle condition. For example, do not tighten the fuel tank cap.**
- **Do not disassemble the pump module.**
- **A hand−held tester is required to conduct the following diagnostic troubleshooting procedure.**

1	**Confirm DTC and EVAP pressure.**

PREPARATION:

(a) Connect a hand−held tester to the DLC3.
(b) Turn the ignition switch to ON (do not start the engine).
(c) Turn the tester ON.

CHECK:

(a) Select the following menu items: DIAGNOSIS / ENHANCED OBD II / DTC INFO / CURRENT CODES.
(b) Read DTCs.
(c) Select the following menu items: DIAGNOSIS / ENHANCED OBD II / DATA LIST / ALL / VAPOR PRESS.
(d) Read the EVAP (Evaporative Emission) pressure displayed on the tester.

RESULT:

Display (DTC Output)	Test Results	Suspected Trouble Areas	Proceed To
P0451	—	• Pressure sensor	C
P0452	Less than 45 kpa (430 mmHg)	• Wire harness/connector (ECM − pressure sensor) • Pressure sensor • Short in ECM circuit	A
P0453	More than 120 kPa (900 mmHg)	• Wire harness/connector (ECM − pressure sensor) • Pressure sensor • Open in ECM circuit	B

B	**Go to step 4.**
C	**Go to EVAP inspection procedure (See page DI−884).**

A

2	**Measure resistance between terminal PPMP of ECM and body ground.**

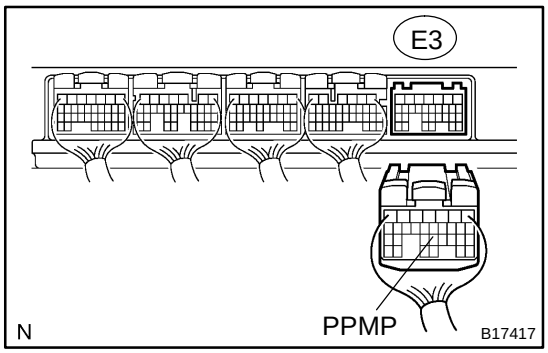

PREPARATION:

(a) Turn the ignition switch to OFF.

(b) Disconnect the E3 ECM connector.

CHECK:

Measure the resistance between PPMP terminal of the ECM connector and the body ground.

RESULT:

Test Results	Suspected Trouble Areas	Proceed To
10 Ω or less	• Wire harness/connector (ECM − pressure sensor) • Short in pressure sensor circuit	A
10 kΩ or more	• Wire harness/connector (ECM − pressure sensor) • Short in ECM circuit	B

B → **Go to step 7.**

A

3	**Measure resistance between terminal PPMP of ECM and body ground.**

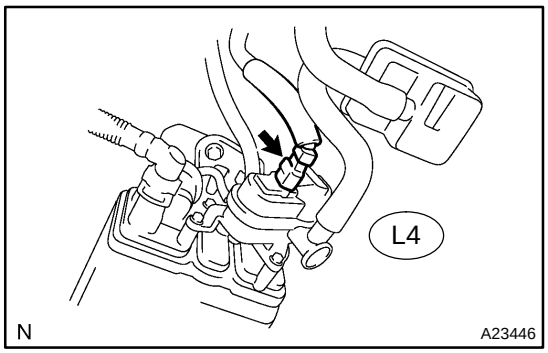

PREPARATION:

(a) Disconnect the L4 canister connector.

(b) Disconnect the E3 ECM connector.

CHECK:

Check the resistance between PPMP terminal of the ECM connector and the body ground.

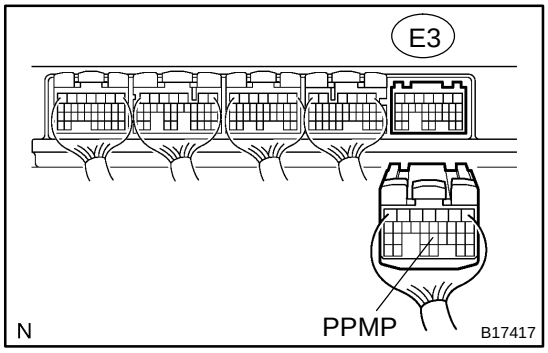

Result:

Test Results	Suspected Trouble Areas	Proceed To
10 kΩ or more	• Short in pressure sensor circuit	A
10 Ω or less	• Short in wire harness/connector (ECM − pressure sensor)	B

A	**Go to step 5.**
B	**Go to step 6.**

4	Measure voltage and resistance of pump module connector.

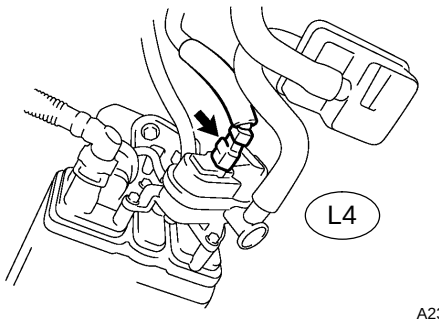

PREPARATION:

(a) Disconnect the L4 canister connector.

(b) Turn the ignition switch to ON.

CHECK:

Measure the voltage and resistance of the L4 connector.

OK:

Standard:

Tester Connections	Specified Conditions
L4−4 − Body ground	Between 4.5 V and 5.5 V
L4−3 − Body ground	Between 4.5 V and 5.5 V
L4−2 − Body ground	100 Ω or less

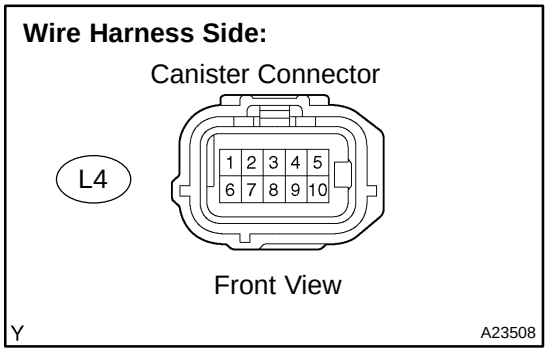

RESULT:

Test Results	Suspected Trouble Areas	Proceed To
Voltage and resistance within standard ranges	• Open in pressure sensor circuit	A
Voltage and resistance outside standard ranges	• Open in wire harness/connector (ECM − pressure sensor)	B

B → **Go to step 6.**

A

5	Replace charcoal canister assembly.

NEXT → **Go to step 8.**

6	Repair or replace wire harness and connectors.

HINT:

If the exhaust tail pipe has been removed, go to the next step before reinstalling it.

NEXT → **Go to step 8.**

7	**Replace ECM (See page SF−82).**

NEXT

8	**Check whether DTC output recurs.**

PREPARATION:

(a) Connect the hand−held tester to the DLC3.
(b) Turn the ignition switch to ON and turn the tester ON.
(c) Wait for at least 60 seconds.

CHECK:

(a) On the tester, select the following menu items: DIAGNOSIS/ENHANCED OBD II/DTC INFO/PENDING CODES.

HINT:

If no pending DTC is displayed on the tester, the repair has been successfully completed.

NEXT

Completed

DIDRR−01

DTC	P0500	Vehicle Speed Sensor ”A”

DTC	P0503	Vehicle Speed Sensor ”A” Intermittent/Erratic/High

CIRCUIT DESCRIPTION

The No.1 vehicle speed sensor outputs a 4−pulse signal for every revolution of the rotor shaft, which is rotated by the transmission output shaft via the driven gear. After this signal is converted into a more precise rectangular waveform by the waveform shaping circuit inside the combination meter, it is then transmitted to the ECM. The ECM determines the vehicle speed based on the frequency of these pulse signals.

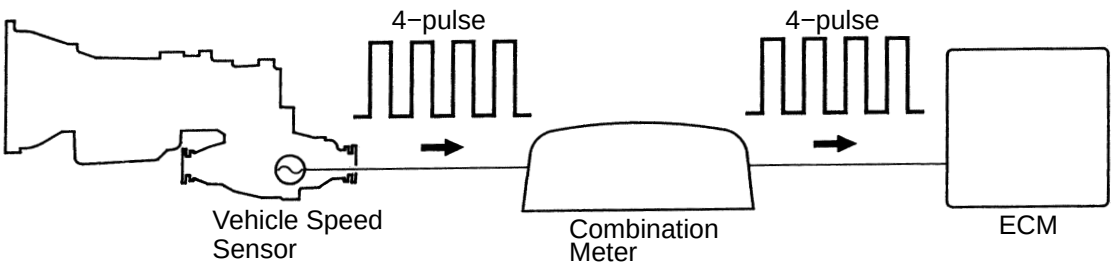

P22487

DTC No.	Proceed to	DTC Detection Condition	Trouble Area
P0500	Step 1	No vehicle speed sensor signal to ECM under following conditions: (2 trip detection logic) • Vehicle is being driven	• Combination meter • Open or short in vehicle speed sensor circuit • Vehicle speed sensor • ECM
P0503	DI−430	Intermittent problem in the vehicle speed sensor circuit	

MONITOR DESCRIPTION

The ECM assumes that the vehicle is driven when the park/neutral position switch is OFF and it has been over 4 sec. since the actual vehicle speed was 5.59 mph (9 km/h) or more.
If there is no signal from the vehicle speed sensor when these conditions are satisfied, the ECM concludes that there is a fault in the vehicle speed sensor. The ECM will turn on the MIL and a DTC is set.

MONITOR STRATEGY

Related DTCs	P0500	Vehicle speed sensor ”A” pulse input error
Required sensors/components	Main sensors	Vehicle speed sensor
	Related sensors	Park/Neutral position switch, Engine coolant temperature sensor, Combination meter
Frequency of operation	Continuous	
Duration	500 times	
MIL operation	Immediate	
Sequence of operation	None	

TYPICAL ENABLING CONDITIONS

Item	Specification	
	Minimum	Maximum
The monitor will run whenever this DTC is not present	See page DI−437	
Vehicle speed is 5.59 mph (9 km/h) or more	4 sec.	−
Park/neutral position switch	OFF	

TYPICAL MALFUNCTION THRESHOLDS

Detection Criteria	Threshold
Sensor signal	No pulse input

WIRING DIAGRAM

Access Cab, Standard Cab:

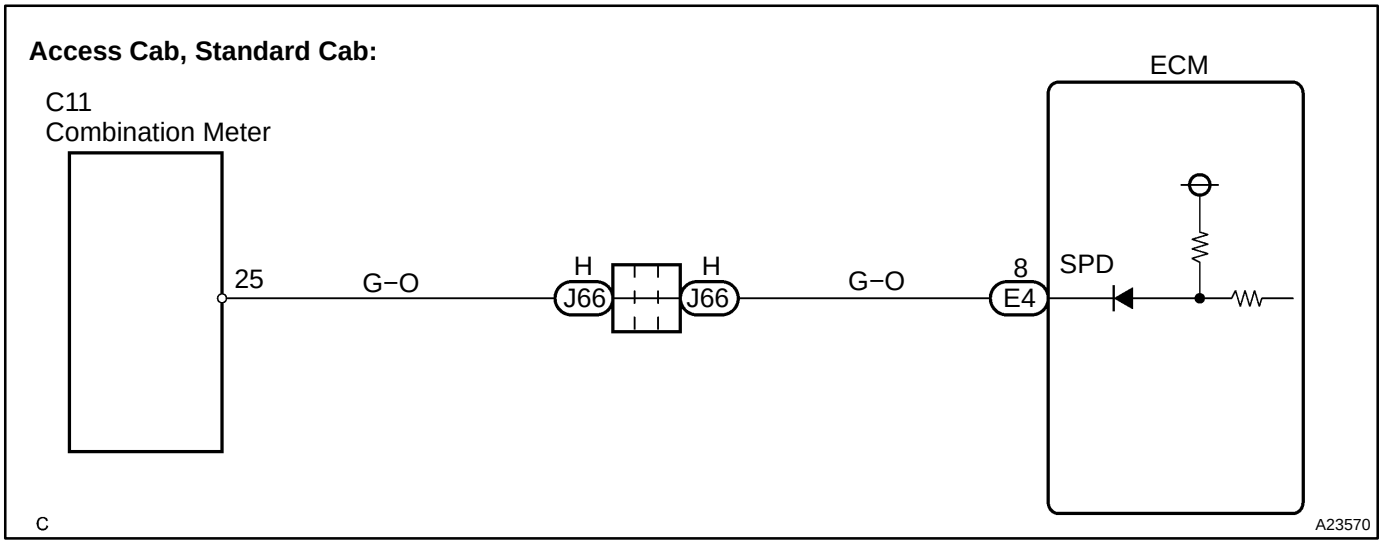

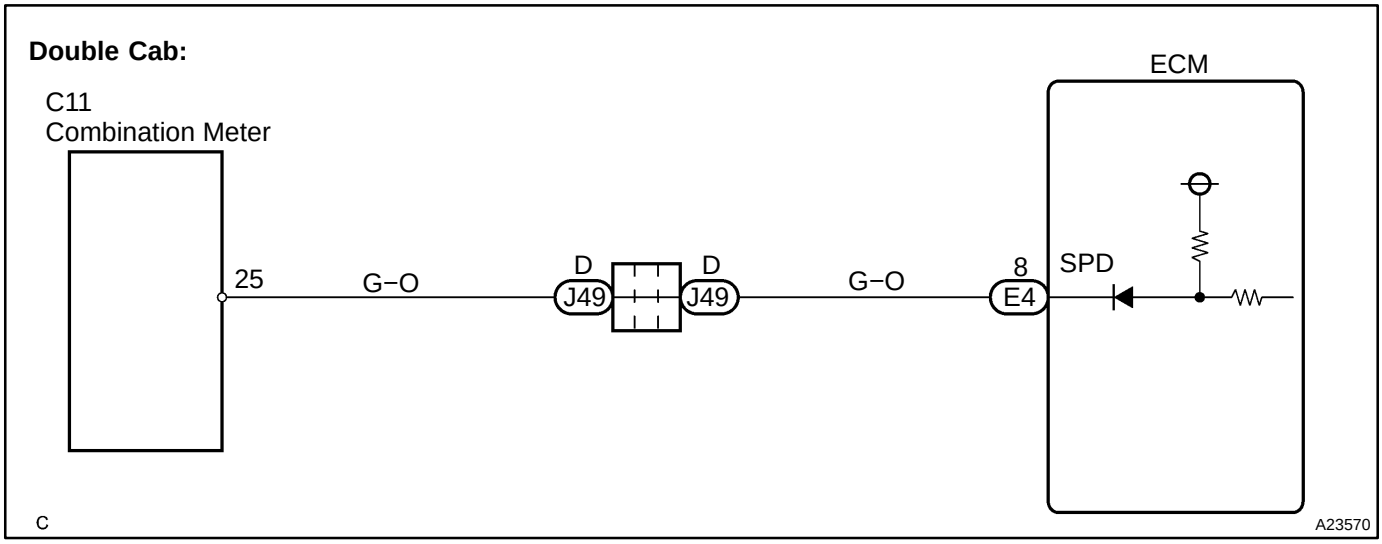

INSPECTION PROCEDURE

HINT:
Read freeze frame data using the hand−held tester. Freeze frame data records the engine conditions when a malfunction is detected. When troubleshooting, freeze frame data can help determine if the vehicle was running or stopped, if the engine was warmed up or not, if the air−fuel ratio was lean or rich, as well as other data from the time when a malfunction occurred.

1	**Check operation of speedometer.**

PREPARATION:
(a) Connect the hand−held tester to the DLC3.
(b) Turn the ignition switch to ON and push the hand−held tester main switch ON.
(c) Start the engine.
(d) When using hand−held tester, enter the following menu: DIAGNOSIS / ENHANCED OBD II / DATA LIST / PRIMARY / VEHICLE SPD.

CHECK:
Read the mass air flow rate on the hand−held tester.

RESULT:

Vehicle speed	Proceed to
Vehicle speed remains 0 km/h (0 mph)	A
Vehicle speed is lower than actual speed	A
Vehicle speed is same as actual speed	B

B → **Check for intermittent problems (See page DI−430).**

A

2	Check voltage between terminal SPD and E1 of ECM connector.

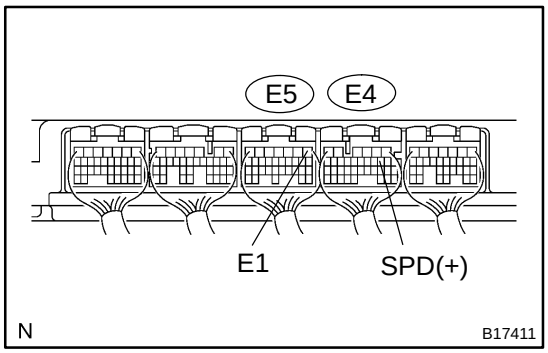

PREPARATION:

(a) Shift the shift lever to neutral.
(b) Jack up the rear wheel on one side.
(c) Turn the ignition switch ON.

CHECK:

Measure the voltage between the specified terminal of the E4 and E5 ECM connector when the wheel is turned slowly.

OK:

Standard:

Tester Connection	Specified Condition
SPD (E4−8) − E1 (E5−1)	Generated intermittently

HINT:

The output voltage should fluctuate up and down similarly to the diagram on the left when the wheel is turned slowly.

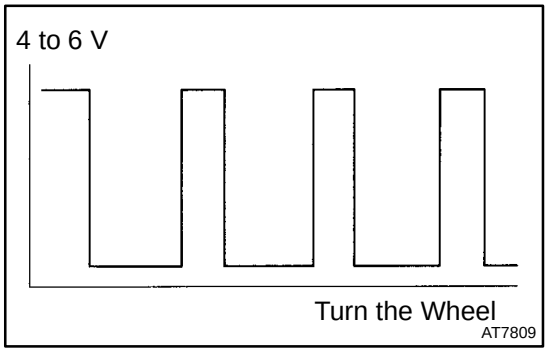

OK → **Replace ECM (See page SF−82).**

NG

3	Check vehicle speed sensor.

Component Side Connector:

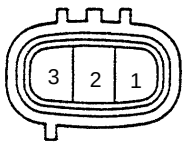

Vehicle Speed Sensor

I25536

PREPARATION:

(a) Disconnect the vehicle speed sensor connector.
(b) Connect the battery positive (+) lead to terminal 1 and the battery negative (−) lead to terminal 2.
(c) Connect the tester positive (+) lead to terminal 3 and the tester negative (−) lead to terminal 2.
(d) Shift the shift lever to N position.
(e) Rotate the shaft.

CHECK:

Check that there is voltage change between terminals 2 and 3.

OK:

Standard: 0 V to 10 V or more

NG → **Replace vehicle speed sensor.**

OK

4	Check sensor installation (Vehicle speed sensor).

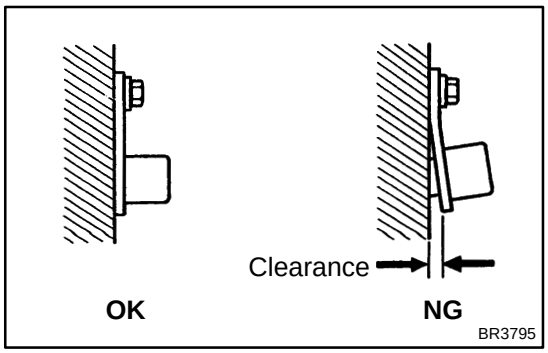

CHECK:

Check the vehicle speed sensor installation.

OK:

The vehicle speed sensor is installed properly.

NG → **Tighten sensor installation bolt.**

OK

5	Check for open and short in harness and connector between combination meter and ECM.

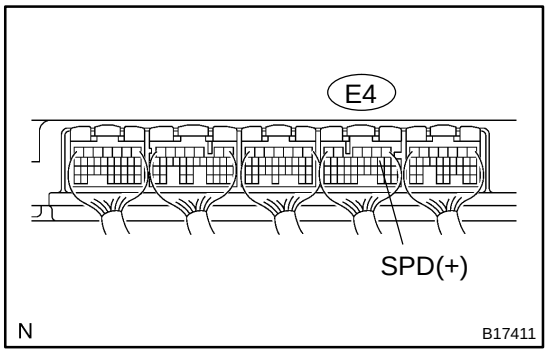

PREPARATION:

(a) Disconnect the C11 combination meter connector.

(b) Disconnect the E4 ECM connector.

CHECK:

Check for resistance between the wire harness side connectors.

OK:

Standard (Check for open):

Symbols (Terminal No.)	Specified condition
SPD (E4−8) − C11−23	Below 1 Ω

Standard (Check for short):

Symbols (Terminal No.)	Specified condition
SPD (E4−8) or C11−23 − Body ground	10 kΩ or higher

Wire Harness Side:

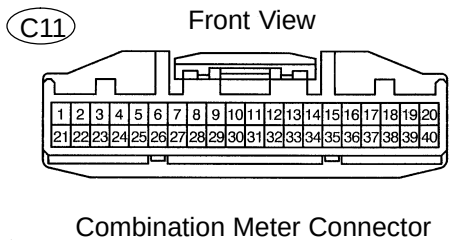

NG → **Repair or replace harness or connector.**

OK

Check combination meter circuit (See page BE−86).

DIA8I−03

DTC	P0604	Internal Control Module Random Access Memory (RAM) Error

DTC	P0606	ECM/PCM Processor

DTC	P0607	Control Module Performance

DTC	P0657	Actuator Supply Voltage Circuit / Open

MONITOR DESCRIPTION

The ECM continuously monitors its internal memory status, internal circuits, and output signals to the throttle actuator. This self−check insures that the ECM is functioning properly. If any malfunction is detected, the ECM will set the appropriate DTC and illuminate the MIL.

The ECM memory status is diagnosed by internal ”mirroring” of the main CPU and the sub CPU to detect RAM (Random Access Memory) errors. The two CPUs also perform continuous mutual monitoring.

The ECM sets a DTC if: 1) outputs from the 2 CPUs are different and deviate from the standards, 2) the signals to the throttle actuator deviate from the standards, 3) a malfunction is found in the throttle actuator supply voltage, and 4) any other ECM malfunction is found.

DTC No.	DTC Detecting Condition	Trouble Area
P0604 P0606 P0607 P0657	ECM malfunction	• ECM

MONITOR STRATEGY

Related DTCs	P0604	Random access memory (RAM) error
	P0606	CPU malfunction
	P0607	ECM range check
	P0657	ETCS power supply
Required sensors/components	ECM	
Frequency of operation	Continuous	
Duration	Within 1 sec.	
MIL operation	Immediate	
Sequence of operation	None	

TYPICAL ENABLING CONDITIONS

The monitor will run whenever these DTCs are not present	See page DI−437
The typical enabling condition is not available	−

TYPICAL MALFUNCTION THRESHOLDS

Detection Criteria	Threshold
P0604:	
RAM	RAM mirror check fail
P0606:	
Either of the following conditions is met	Condition 1 or 2
1. Difference between TP of main CPU and TP of sub CPU	0.3 V or more
2. Difference between APP of main CPU and APP of sub CPU	0.3 V or more
P0607:	
Either of the following conditions is met	Condition 1 or 2
1. All of the following conditions are met	Condition (a), (b) and (c)
(a) CPU reset	1 time or more
(b) Difference between TP and APP learned	0.4 V or more
(c) Electronic throttle actuator	OFF
2. CPU reset	2 times or more
P0657:	
ECTS power supply when ignition switch OFF to ON	7 V or more

INSPECTION PROCEDURE

HINT:

Read freeze frame data using the hand−held tester. Freeze frame data records the engine conditions when a malfunction is detected. When troubleshooting, freeze frame data can help determine if the vehicle was running or stopped, if the engine was warmed up or not, if the air−fuel ratio was lean or rich, as well as other data from the time when a malfunction occurred.

Replace ECM (See page SF−82).

DIDR4−01

CHECK MODE PROCEDURE

HINT:

Hand−held tester only:

Check mode has a higher sensitivity to detect malfunctions and can detect malfunctions that normal mode cannot detect. Check mode can also detect all the malfunctions that normal mode can detect.

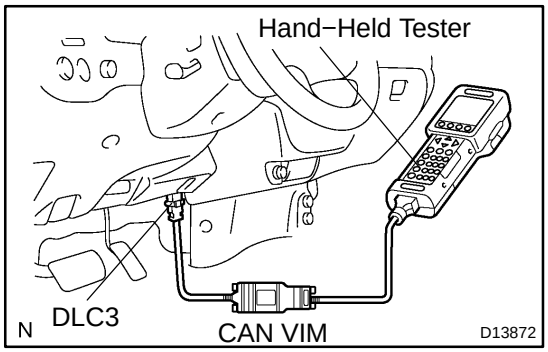

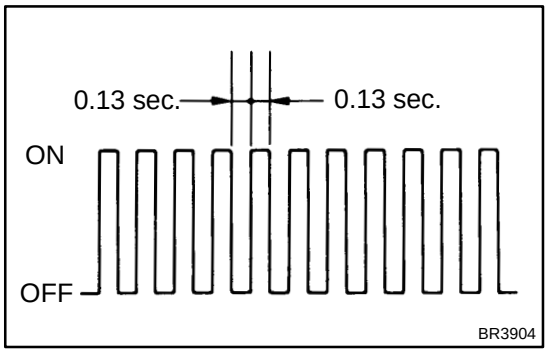

1. CHECK MODE PROCEDURE

(a) Make sure that the items below are true.
  (1) Battery positive voltage 11 V or more
  (2) Throttle valve fully closed
  (3) Transmission in the P or N position
  (4) A/C switched OFF

(b) Turn the ignition switch OFF.

(c) Connect the hand−held tester to the DLC3.

(d) Turn the ignition switch ON.

(e) Change the ECM to check mode with the hand−held tester. Enter the following menus: DIAGNOSIS / ENHANCED OBD II / CHECK MODE. Make sure the MIL flashes as shown in the illustration.

NOTICE:

All DTCs and freeze frame data recorded will be erased if: 1) the hand−held tester is used to change the ECM from normal mode to check mode or vice−versa; or 2) during check mode, the ignition switch is turned from ON to ACC or OFF.

(f) Start the engine. The MIL should turn off after the engine starts.

(g) Simulate the conditions of the malfunction described by the customer.

(h) After simulating the malfunction conditions, use the hand−held tester diagnosis selector to check the DTC, freeze frame data and other data.

(i) After checking the DTC, inspect the applicable circuit.

2. CLEAR DTC (Using the hand−held tester)

(a) Connect the hand−held tester to the DLC3.

(b) Turn the ignition switch ON.

(c) Erase DTCs and freeze frame data with the OBD II scan tool (complying with SAE J1978) or the hand−held tester. For the hand−held tester: 1) enter the following menus: DIAGNOSIS / ENHANCED OBD II / DTC INFO / CLEAR CODES; and 2) press YES. For the OBD II scan tool, see its instruction manual.

3. CLEAR DTC (Not using the hand−held tester)

(a) Remove the EFI No. 1 and ETCS fuses from the engine room J/B for more than 60 seconds, or disconnect the battery terminal for more than 60 seconds.
After disconnecting the battery terminal, perform the ”INITIALIZE” procedure.

DIDR0−01

CHECKING MONITOR STATUS

1. OUTLINE

The monitor results and the test values can be checked with the OBD II scan tool.
The engine control module (ECM) monitors the emissions−related components as the thermostat, catalyst converter and evaporative emissions (EVAP), and determines whether they are functioning normally or not. When finished and monitoring, the ECM stores the monitor results and the test values.
The monitor result indicates whether the component is functioning normally or not. The test value is the value that was used to determine the monitor result. If the test value is outside the test limit (malfunction criterion), the ECM determines the component is malfunctioning. Some emissions−related components have multiple test values to determine monitor result. If one of these test values is outside test limit, the ECM determines the component is determine monitor result. If one of these test values is outside test limit, the ECM determines the components is malfunctioning.

2. DESCRIPTION

The test value and test limit information are described as shown in the following table. This information is included under ”MONITOR RESULT” in the emissions−related DTC sections.

Thermostat:

MID	TID	Scaling	Test Result	Minimum Test Limit	Maximum Test Limit
$E1	$E8	Multiply by 0.1 [°C]	ECT sensor output when estimated ECT reached to malfunction criteria	Malfunction criteria	Maximum test limit

- MID (Monitor Identification Data) is assigned to each emissions−related component.
- TID (Test Identification Data) is assigned to each test value.
- Scaling is used to calculate the test value indicated on generic OBD II scan tools.

3. PROCEDURE (USING HAND−HELD TESTER)

(a) Connect the hand−held tester to the DLC3.
(b) Turn the ignition switch and hand−held tester ON.
(c) Clear DTCs.
(d) Allow the vehicle to drive, in accordance with the applicable drive pattern described in the READINESS MONITOR DRIVE PATTERN section (see page DI−446).
(e) Check the monitor result. Select the hand−held tester menus: DIAGNOSIS/ENHANCED OBDII/MONITOR INFO/MONITOR STATUS. The monitor result appears after the component name.
- AVAIL indicates the component has not been monitored yet.
- COMPL indicates the component is functioning normally.
- INCMPL indicates the component is malfunctioning.

(f) Check the test value(s). Select the hand−held tester menus: DIAGNOSIS/ENHANCED OBDII/MONITOR INFO/TEST RESULT.
(g) Select the component and press ENTER. If the monitor result has been COMPL or INCMPL, the accuracy test value appears.
(h) Compare the test value with the test limits, MIN and MAX.
- If the test value is outside of the test limit, the component is malfunctioning.
- If the test value is on the borderline of the test limit, a malfunction is concealed in the component.

HINT:
The monitor result might on rare occasions be COMPL even if the malfunction indicator lamp (MIL) is illuminated. This indicates the system malfunctioned on a previous driving cycle. This might be caused by an intermittent problem.

DI079−19

CUSTOMER PROBLEM ANALYSIS CHECK

ENGINE CONTROL SYSTEM Check Sheet

Inspector's Name

Customer's Name		VIN	
Driver's Name		Production Date	
Data Vehicle Brought in		Licence Plate No.	
Engine model		Odometer Reading	km miles

Problem Symptoms	☐ Engine does not Start	☐ Engine does not crank ☐ No initial combustion ☐ No complete combustion
	☐ Difficult to Start	☐ Engine cranks slowly ☐ Other _____
	☐ Poor Idling	☐ Incorrect first idle ☐ Idling rpm is abnormal ☐ High (rpm) ☐ Low (rpm) ☐ Rough idling ☐ Other _____
	☐ Poor Driveability	☐ Hesitation ☐ Back fire ☐ Muffler explosion (after−fire) ☐ Surging ☐ Knocking ☐ Other _____
	☐ Engine Stall	☐ Soon after starting ☐ After accelerator pedal depressed ☐ After accelerator pedal released ☐ During A/C operation ☐ Shifting from N to D ☐ Other _____
	☐ Others	

Dates Problem Occurred		
Problem Frequency		☐ Constant ☐ Sometimes (times per day/month) ☐ Once only ☐ Other _____
Condition When Problem Occurs	Weather	☐ Fine ☐ Cloudy ☐ Rainy ☐ Snowy ☐ Various/Other _____
	Outdoor Temperature	☐ Hot ☐ Warm ☐ Cool ☐ Cold (approx. ____ ˚C/____ ˚F)
	Place	☐ Highway ☐ Suburbs ☐ Inner city ☐ Uphill ☐ Downhill ☐ Rough road ☐ Other _____
	Engine Temp.	☐ Cold ☐ Warming up ☐ After warming up ☐ Any temp. ☐ Other _____
	Engine Operation	☐ Starting ☐ Just after starting (min.) ☐ Idling ☐ Racing ☐ Driving ☐ Constant speed ☐ Acceleration ☐ Deceleration ☐ A/C switch ON/OFF ☐ Other _____

Condition of malfunction indicator light (MIL)		☐ Remains on ☐ Sometimes light up ☐ Does not light up
DTC Inspection	Normal Mode (Pre−check)	☐ Normal ☐ Malfunction code(s) (code) ☐ Freezed frame data ( )
	Check Mode	☐ Normal ☐ Malfunction code(s) (code) ☐ Freezed frame data ( )

DIDR3−01

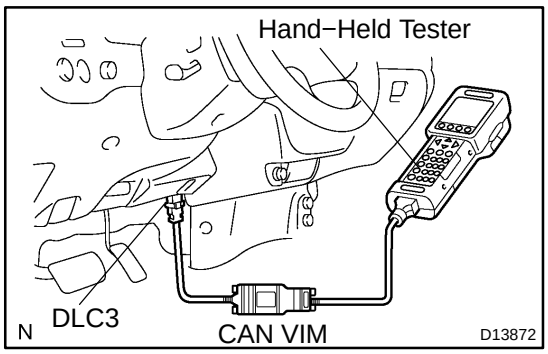

DTC CHECK / CLEAR

1. CHECK DTC

DTCs which are stored in the ECM can be displayed with the hand−held tester.

These scan tools can display pending DTCs and current DTCs. Some DTCs are not stored if the ECM does not detect a malfunction during consecutive driving. However, the detected malfunction during once driving is stored as pending DTC.

(a) Connect the hand−held tester to the CAN VIM. Then connect the CAN VIM to the Data Link Connector 3 (DLC3).

(b) Turn the ignition switch to ON.

(c) Enter the following menus: DIAGNOSIS / ENHANCED OBD II / DTC INFO / CURRENT CODES (or PENDING CODE).

(d) Confirm the DTCs and freeze frame data and then write them down.

(e) See page DI−477 to confirm the details of the DTCs.

NOTICE:

When simulating a symptom with the hand−held tester to check the DTCs, use the normal mode. For DTC chart subject to ”2 trip detection logic”, perform either of the following actions.

Turn the ignition switch OFF after the symptom is simulated once. Then repeat the simulation process again. When the problem has been simulated twice, the MIL illuminates and the DTCs are recorded in the ECM.

2. CLEAR DTC

(a) Connect the hand−held tester to the CAN VIM. Then connect the CAN VIM to the DLC3.

(b) Turn the ignition switch to ON.

(c) Enter the following menus: DIAGNOSIS / ENHANCED OBD II / DTC INFO / CLEAR CODES and press YES.

DIDR2−01

DIAGNOSIS SYSTEM

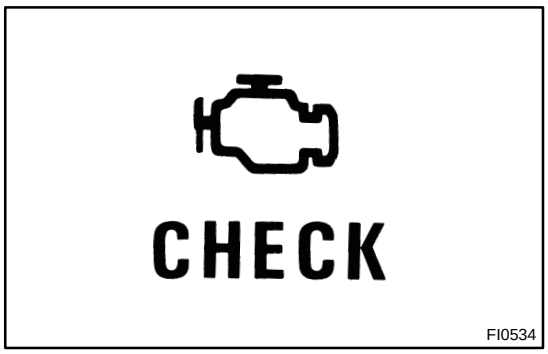

1. Description

- When troubleshooting On−Board Diagnostic (OBD ll) vehicles, the vehicle must be connected to the hand−held tester. Various data output from the vehicle's ECM can then be read.
- OBD ll regulations require that the vehicle's on−board computer illuminates the Malfunction Indicator Light (MIL) on the instrument panel when the computer detects a malfunction in: 1) the emission control system/components, or 2) the powertrain control components (which affect vehicle emissions), or 3) the computer. In addition, the applicable Diagnostic Trouble Codes (DTCs) prescribed by SAE J2012 are recorded in the ECM memory (See page DI−477).

If the malfunction does not reoccur in 3 consecutive trips, the MIL goes off automatically but the DTCs remain recorded in the ECM memory.

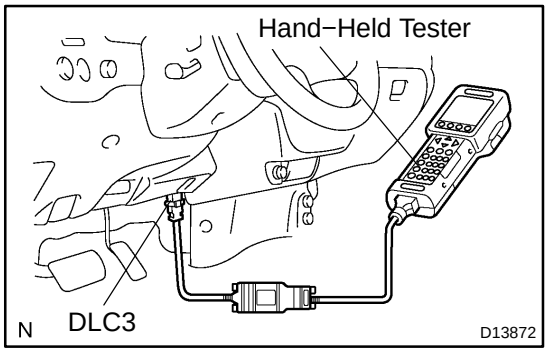

To check the DTC, connect the hand−held tester or OBD II scan tool to the Data Link Connector 3 (DLC3) of the vehicle. The hand−held tester or OBD II scan tool also enables you to erase the DTC and check the freeze frame data and various forms of engine data (See the instruction manual for the hand−held tester). The DTC includes SAE controlled codes and manufacturer controlled codes. SAE controlled codes must be set according to the SAE, while manufacturer controlled codes can be set by a manufacturer with certain restrictions (See the DTC chart on page DI−477).

2. NORMAL MODE AND CHECK MODE

The diagnosis system operates in "normal mode" during normal vehicle use. In "normal mode", 2 trip detection logic* is used to ensure accurate detection of malfunctions. A "check mode" is also available to technicians as an option. In "check mode", 1 trip detection logic is used for simulating malfunction symptoms and increasing the system's ability to detect malfunctions, including intermittent malfunctions (See page DI−430).

3. 2−TRIP DETECTION LOGIC

When a malfunction is first detected, the malfunction is temporarily stored in the ECM memory. This is known as 1st trip detection. If the ignition switch is turned OFF and then ON again, and the same malfunction is detected again, the MIL will illuminate. This is known as 2nd trip detection.

- Freeze frame data:
  The freeze frame data records the engine conditions (fuel system, calculated load, engine coolant temperature, fuel trim, engine speed, vehicle speed, etc.) when a malfunction is detected. When troubleshooting, freeze frame data can help determine if the vehicle was running or stopped, if the engine was warmed up or not, if the air−fuel ratio was lean or rich, as well as other data from the time when a malfunction occurred.

Priorities for troubleshooting:

When multiple DTCs occur, find out the order in which the DTCs should be inspected by checking the component's DTC chart. If no instructions are written in the DTC chart, check DTCs in the following order of priority:

(a) DTCs other than fuel trim malfunction DTCs (P0171, P0172, P0174 and P0175) and misfire DTCs (P0300 to P0308).
(b) Fuel trim malfunction DTCs (P0171, P0172, P0174 and P0175).
(c) Misfire DTCs (P0300 to P0308).

4. CHECK DLC3

The vehicle's ECM uses the ISO 9141−2 for communication protocol. The terminal arrangement of the DLC3 complies with SAE J1962 and matches the ISO 9141−2 format.

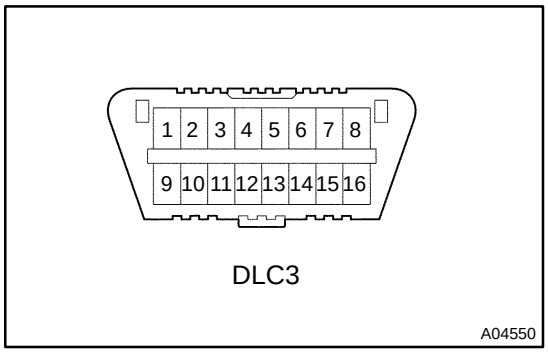

DLC3

Symbol	Terminal Description	Condition	Specified Condition
SIL (7) − SG (5)	Bus "+" line	During transmission	Pulse generation
CG (4) − Body ground	Chassis ground	Always	Below 1 Ω
SG (5) − Body ground	Signal ground	Always	Below 1 Ω
BAT (16) − Body ground	Battery positive	Always	11 to 14 V
CANH (6) − CANL (14)	HIGH−level CAN bus line	Ignition switch OFF	54 to 69 Ω
CANH (6) − Battery positive	HIGH−level CAN bus line	Ignition switch OFF	1 MΩ or higher
CANH (6) − CG (4)	HIGH−level CAN bus line	Ignition switch OFF	1 kΩ or higher
CANL (14) − Battery positive	LOW−level CAN bus line	Ignition switch OFF	1 MΩ or higher
CANL (6) − CG (4)	LOW−level CAN bus line	Ignition switch OFF	1 kΩ or higher

HINT:

Connect the cable of the hand−held tester to the DLC3, turn the ignition switch ON and attempt to use the hand−held tester. If the screen displays UNABLE TO CONNECT TO VEHICLE, a problem exists in the vehicle side or the tester side.

- If the communication is normal when the tool is connected to another vehicle, inspect the DLC3 on the original vehicle.

- If the communication is still impossible when the tool is connected to another vehicle, the problem is probably in the tool itself, so consult the Service Department listed in the tool's instruction manual.

5. INSPECT BATTERY VOLTAGE

Battery Voltage: 11 to 14 V

If voltage is below 11 V, recharge the battery before proceeding.

6. CHECK MIL

(a) The MIL comes on when the ignition switch is turned ON and the engine is not running.

HINT:

If the MIL is not illuminated, troubleshoot the MIL circuit (See page DI−940).

(b) When the engine is started, the MIL should not illuminate. If the lamp remains on, the diagnosis system has detected a malfunction or abnormality in the system.

7. ALL READINESS

For this vehicle, using the hand−held tester allows readiness codes corresponding to all DTCs to be read. When diagnosis (normal or malfunctioning) has been complete, readiness codes are set. Enter the following menus: ENHANCED OBD II / MONITOR STATUS on the hand−held tester.

DIDR6−01

DATA LIST / ACTIVE TEST

1. DATA LIST

HINT:

By reading the DATA LIST displayed on a hand−held tester, you can check values, including those of the switches, sensors, and actuators, without removing any parts. Reading the DATA LIST as the first step of troubleshooting is one method of shortening diagnostic time.

NOTICE:

In the table below, the values listed under Normal Conditions are for reference only. Do not depend solely on these values when determining whether or not a part is faulty.

(a) Warm up the engine.
(b) Turn the ignition switch to OFF.
(c) Connect a hand−held tester to the DLC3.
(d) Turn the ignition switch to ON.
(e) Turn the tester ON.
(f) Select the following menu items: DIAGNOSIS / ENHANCED OBD II / DATA LIST.
(g) Check the values by referring to the table below.

Hand−Held Tester Display	Measurement Item:Range (Display)	Normal Condition *1	Diagnostic Note
INJECTOR	Injection period of the No. 1 cylinder: Min.: 0 ms, Max.: 32.64 ms	2.3 to 3.8 ms: Idling	—
IGN ADVANCE	Ignition timing advance for No. 1 cylinder/ Min.: −64 deg., Max.: 63.5 deg.	BTDC 4 to 17˚: Idling	—
CALC LOAD	Calculated load by ECM: Min.: 0 %, Max.: 100 %	• 11 to 21 %: Idling • 12 to 22 %: Running without load (2,500 rpm)	—
VEHICLE LOAD	Vehicle load: Min.: 0 %, Max.: 25700 %	Actual vehicle load	—
MAF	Air flow rate from MAF meter: Min.: 0 g/s, Max.: 655 g/s	2.0 to 3.9 g/s: Idling	If the value approximately 0.0 g/s: • Mass air flow meter power source circuit open • VG circuit open or short If the value 160.0 g/s or more: • E2G circuit open
ENGINE SPD	Engine speed: Min.: 0 rpm, Max.: 16,383 rpm	600 ±50 rpm: Idling	—
VEHICLE SPD	Vehicle speed: Min.: 0 km/h, Max.: 255 km/h	Actual vehicle speed	Speed indicated on speedometer
COOLANT TEMP	Engine coolant temperature: Min.: −40°C, Max.: 140°C	80 to 100˚C (176 to 212˚F): After warming up	• If the value −40°C (−40°F): sensor circuit open • If the value 140°C (284°F): sensor circuit shorted
INTAKE AIR	Intake air temperature: Min.: −40°C, Max.: 140°C	Equivalent to ambient air temperature	• If the value −40°C (−40°F): sensor circuit open • If the value 140°C (284°F): sensor circuit shorted
SECONDARY AIR	Second air system status: ON or OFF	ON: Secondary air system operation	—
AIR−FUEL RATIO	Air−fuel ratio: Min.: 0, Max.: 1.999	0.8 to 1.2: During idling	—
EVAP VAPOR PRES	EVAP vapor pressure: Min.: −8192 Pa, Max.: 8191 Pa	0 Pa: Fuel tank cap removed	—

PURGE DENSITY	Learning value of purge density/ Min.: −50, Max.: 350	Idling: −40 to 0 %	Service data
PURGE FLOW	Purge flow: Min.: 0 %, Max.: 102.4 %	0 to 100 %: Idling	—
EVAP PURGE VSV	EVAP (Purge) VSV control duty: Min.: 0 %, Max.: 100 %	0 to 100 %: During idling	Order signal from ECM
VAPOR PRESS	Vapor pressure: Min.: −4.125 kPa, Max.: 2.125 kPa	0 kPa: Fuel tank cap removed	Pressure inside fuel tank monitored by the vapor pressure sensor
KNOCK CRRT VAL	Correction learning value of knocking: Min.: −64 CA, Max.: 1,984 CA	0 to 22 °CA: Driving, 44 mph (70 km/h)	Service data
KNOCK FB VAL	Feedback value of knocking: Min.: −64 CA, Max.: 1,984 CA	−22 to 0 °CA Driving, 44 mph (70 km/h)	Service data
ACCEL POS #1	Absolute Accelerator Pedal Position (APP) No. 1: Min.: 0 %, Max.: 100 %	10 to 22 %: accelerator pedal is released 54 to 86 %: accelerator pedal is fully depressed	—
ACCEL POS #2	Absolute APP No. 2: Min.: 0 %, Max.: 100 %	12 to 42 %: accelerator pedal is released 66 to 98 %: The accelerator pedal is fully depressed	—
ACCEL POS #1	APP sensor No. 1 voltage: Min.: 0 V, Max.: 4.98 V	—	ETCS freeze data
ACCEL POS #2	APP sensor No. 2 voltage: Min.: 0 V, Max.: 4.98 V	—	ETCS freeze data
ACCEL POS #1	APP sensor No. 1 voltage: Min.: 0 V, Max.: 5 V	0.5 to 1.1 V: accelerator pedal is released. 2.6 to 4.5 V: or pedal is fully depressed.	—
ACCEL POS #2	APP sensor No. 2 voltage: Min.: 0 V, Max.: 5 V	1.2 to 2.0 V: accelerator pedal is released. 3.4 to 5.3 V: accelerator pedal is fully depressed.	—
ACCEL IDL POS	Whether or not accelerator pedal position sensor detecting idle: ON or OFF	ON: Idling	—
THRTL LEARN VAL	Throttle valve fully closed (learned value):	0.4 to 0.8 V	—
ACCEL SSR #1 AD	Accelerator fully closed value No.1 (AD): Min.: 0, Max.: 4.98 V	—	ETCS service data
ACCEL LRN VAL#1	Accelerator fully closed learning value No.1: Min.: 0, Max.: 124.512	—	ETCS service data
ACCEL LRN VAL#2	Accelerator fully closed learning value No.2: Min.: 0, Max.: 124.512	—	ETCS service data
FAIL #1	Whether or not fail safe function executed: ON or OFF	ON: ETCS has failed	—
FAIL #2	Whether or not fail safe function executed: ON or OFF	ON: ETCS has failed	—

ST1	Starter signal: ON or OFF	ON: Cranking	—
SYSGUARD JUDGE	System guard: ON or OFF	—	ETCS service data
OPN MALFUNCTION	Open side malfunction: ON or OFF	—	ETCS service data
THROTTLE POS	Absolute throttle position sensor: Min.: 0 %, Max.: 100 %	• 10 to 24 %: Throttle fully closed • 64 to 96 %: Throttle fully open	Read the value with intrusive operation (active test)
THROTTL IDL POS	Whether or not throttle position sensor detecting idle: ON or OFF	ON: Idling	—
THRTL REQ POS	Throttle requirement position: Min.: 0 V, Max.: 5 V	0.5 to 1.0 V: Idling	—
THROTTLE POS	Throttle sensor positioning: Min.: 0 %, Max.: 100 %	10 to 18 %: Idling	Calculated value based on VTA1
THROTTLE POS #2	Throttle sensor positioning #2: Min.: 0 %, Max.: 100 %	—	Calculated value based on VTA2
THROTTLE POS #1	Throttle position sensor No. 1 output voltage: Min.: 0 V, Max.: 4.9 V	—	ETCS freeze data
THROTTLE POS #2	Throttle position sensor No.2 output voltage: Min.: 0 V, Max.: 4.9 V	—	ETCS freeze data
THROTTLE POS #1	Throttle position No. 1: Min.: 0 V, Max.: 5 V	• 0.5 to 1.2 V: Throttle fully closed • 3.2 to 4.8 V: Throttle fully opened	—
THROTTLE POS #2	Throttle position No. 2: Min.: 0 V, Max.: 5 V	• 2.0 to 2.9 V: Throttle fully closed • 4.6 to 5.5 V: Throttle fully open	Read the value with intrusive operation (active test)
THRTL COMND VAL	Throttle position command value: Min.: 0 V, Max.: 4.98 V	0.5 to 4.8 V	ETCS service data
THROTTLE SSR #1	Throttle sensor opener position No. 1: Min.: 0 V, Max.: 4.98 V	0.6 to 0.9 V	ETCS service data
THROTTLE SSR #2	Throttle sensor opener position No. 2: Min.: 0 V, Max.: 4.98 V	2.2 to 2.6 V	ETCS service data
THRTL SSR #1 AD	Throttle sensor opener position No.1 (AD): Min.: 0 V, Max.: 4.98 V	0.6 to 0.9 V	ETCS service data
THROTTLE MOT	Whether or not throttle motor control permitted: ON or OFF	ON: Idling	Read the value with the power switch ON (Do not start engine)
THROTTLE MOT	Throttle motor current: Min.: 0 A, Max.: 80 A	0 to 3.0 A: Idling	—
THROTTLE MOT	Throttle motor: Min.: 0 %, Max.: 100 %	0.5 to 40 %: Idling	—
THROTTLE MOT	Throttle motor current: Min.: 0 A, Max.: 19.92 A	0 to 3.0 A: Idling	—
THROTL OPN DUTY	Throttle motor opening duty ratio: Min.: 0 %, Max.: 100 %	0 to 40 %: During idling	When accelerator pedal depressed, duty ratio increased
THROTL CLS DUTY	Throttle motor closed duty ratio: Min.: 0 %, Max.: 100 %	0 to 40 %: During idling	When accelerator pedal released quickly, duty ratio increased
THRTL MOT (OPN)	Throttle motor duty ratio (open): Min.: 0 %, Max.: 100 %	—	ETCS service data

THRTL MOT (CLS)	Throttle motor duty ratio (close): Min.: 0 %, Max.: 100 %	—	ETCS service data
O2S B1 S2	Heated oxygen sensor output voltage for bank 1 sensor 2: Min.: 0 V, Max.: 1.275 V	0.1 to 0.9 V: Driving 44 mph (70 km/h)	Performing the INJ VOL or A/F CONTROL function of the ACTIVE TEST enables the technician to check voltage output of the sensor
O2S B2 S2	Heated oxygen sensor output voltage for bank 2 sensor 2: Min.: 0 V, Max.: 1.275 V	0.1 to 0.9 V: Driving 44 mph (70 km/h)	Performing the INJ VOL or A/F CONTROL function of the ACTIVE TEST enables the technician to check voltage output of the sensor
AFS B1 S1	A/F sensor output voltage for bank 1 sensor 1: Min.: 0 V, Max.: 7.999 V	2.8 to 3.8 V: Idling	Performing the INJ VOL or A/F CONTROL function of the ACTIVE TEST enables the technician to check voltage output of the sensor
AFS B2 S1	A/F sensor output voltage for bank 2 sensor 1: Min.: 0 V, Max.: 7.999 V	2.8 to 3.8 V: Idling	Performing the INJ VOL or A/F CONTROL function of the ACTIVE TEST enables the technician to check voltage output of the sensor
TOTAL FT #1	Total fuel trim of bank 1 Average value for fuel trim system of bank 1: Min.: −0.5, Max.: 1,496	−0.2 to 0.2: Idling	—
TOTAL FT #2	Total fuel trim of bank 2 Average value for fuel trim system of bank 2: Min.: −0.5, Max.: 1,496	−0.2 to 0.2: Idling	—
SHORT FT #1	Short−term fuel trim of bank 1: Min.: −100 %, Max.: 99.2%	0 ± 20 %	This item the short−term fuel compensation used to maintain the air−fuel ratio at stoichiometric air−fuel ratio
SHORT FT #2	Short−term fuel trim of bank 2: Min.: −100 %, Max.: 99.2%	0 ± 20 %	This item the short−term fuel compensation used to maintain the air−fuel ratio at stoichiometric air−fuel ratio
LONG FT #1	Long−term fuel trim of bank 1: Min.: −100 %, Max.: 99.2 %	0 ± 20 %	This item the overall fuel compensation carried out in long−term to compensate a continual deviation of the short−term fuel trim from the central value
LONG FT #2	Long−term fuel trim of bank 2: Min.: −100 %, Max.: 99.2 %	0 ± 20 %	This item the overall fuel compensation carried out in long−term to compensate a continual deviation of the short−term fuel trim from the central value
FUEL SYS #1	Fuel system status (Bank1): OL or CL or OL DRIVE or OL FAULT or CL FAULT	CL: Idling after warming up	• OL (Open Loop): Has not yet satisfied conditions to go closed loop • CL (Closed Loop): Using heated oxygen sensor as feedback for fuel control. • OL DRIVE: Open loop due to driving conditions (fuel enrichment) • OL FAULT: Open loop due to detected system fault • CL FAULT: Closed loop but heated oxygen sensor, which used for fuel control malfunctioning

FUEL SYS #2	Fuel system status (Bank 2): OL or CL or OL DRIVE or OL FAULT or CL FAULT	CL: Idling after warming up	• OL (Open Loop): Has not yet satisfied conditions to go closed loop • CL (Closed Loop): Using heated oxygen sensor as feedback for fuel control. • OL DRIVE: Open loop due to driving conditions (fuel enrichment) • OL FAULT: Open loop due to detected system fault • CL FAULT: Closed loop but heated oxygen sensor, which used for fuel control malfunctioning
O2FT B1 S2	Short−term fuel trim associated with the bank 1 sensor 2: Min.: −100 %, Max.: 99.2 %	0 ± 20 %	Same as SHORT FT #1
O2FT B2 S2	Short−term fuel trim associated with the bank 2 sensor 2: Min.: −100 %, Max.: 99.2 %	0 ± 20 %	Same as SHORT FT #1
AF FT B1 S1	Short−term fuel trim associated with the bank 1 sensor 1: Min.: 0, Max.: 1.999	• Value less than 1 (0.000 to 0.999) = Lean • Stoichiometric air−fuel ratio=1 • Value greater than 1 (1.001 to 1.999) = RICH	—
AF FT B2 S1	Short−term fuel trim associated with the bank 2 sensor 1: Min.: 0, Max.: 1.999	• Value less than 1 (0.000 to 0.999) = Lean • Stoichiometric air−fuel ratio=1 • Value greater than 1 (1.001 to 1.999) = RICH	—
CAT TEMP B1S1	Catalyst temperature (Bank 1, Sensor 1): Min.: −40, Max.: 6,513.5 °C	—	—
CAT TEMP B2S1	Catalyst temperature (Bank 2, Sensor 1): Min.: −40, Max.: 6,513.5 °C	—	—
CAT TEMP B1S2	Catalyst temperature (Bank 1, Sensor 2): Min.: −40, Max.: 6,513.5 °C	—	—
CAT TEMP B2S2	Catalyst temperature (Bank 2, Sensor 2): Min.: −40, Max.: 6,513.5 °C	—	—
INI COOL TEMP	Initial engine coolant temperature: Min.: −40°C, Max.: 140°C	Close to ambient air temperature	Service data
INI INTAKE TEMP	Initial intake air temperature: Min.: −40°C, Max.: 140°C	Close to ambient air temperature	Service data
INJ VOL	Injection volume (cylinder 1): Min.: 0 ml, Max.: 2.048 ml	0 to 0.5 ml	Quantity of fuel injection volume for 10 times
STARTER SIG	Starter signal: ON or OFF	ON: Cranking	—
PS SW	Power steering signal: ON or OFF	ON: Power steering operation	—
PS SIGNAL	Power steering signal: ON or OFF	ON: When steering wheel first turned after ignition switch turned to ON	This signal status usually ON until ignition switch turned to OFF
CTP SW	Closed throttle position switch: ON or OFF	• ON: Throttle fully closed • OFF: Throttle open	—

A/C SIG	A/C signal: ON or OFF	ON: A/C ON	—
ELECT LOAD SIG	Electrical load signal: ON or OFF	ON: Headlights or defogger is turned ON	—
STOP LIGHT SW	Stop lamp switch: ON or OFF	ON: brake pedal is depressed.	—
+BM	Whether or not electric throttle control system power inputted: ON or OFF	ON: Idling	—
+BM VOLTAGE	+BM voltage: Min.: 0, Max.: 19.92	10 to 15 V: Idling	ETCS service data
BATTERY VOLTAGE	Battery voltage: Min.: 0 V, Max.: 65.535 V	9 to 14 V: Idling	—
ACTUATOR POWER	Actuator power supply: ON or OFF	ON: Idling	ETCS service data
ATM PRESSURE	Atmospheric pressure: Min.: 0 kPa, Max.: 150 kPa	Equivalent to atmospheric pressure (absolute pressure)	—
SECOND AIR VSV	Secondary air injection system status	ON: Secondary air injection system operation	—
ACT VSV	A/C cut status for Active Test: ON or OFF	—	Active Test support data
EVAP (Purge) VSV	VSV status for EVAP control: ON or OFF	—	Active Test support data
FUEL PUMP / SPD	Fuel pump/speed status: ON or OFF	—	Active Test support data
VVT CTRL B1	VVT control status (Bank 1): ON or OFF	—	Active Test support data
VVT CTRL B2	VVT control status (Bank 2): ON or OFF	—	Active Test support data
VACUUM PUMP	Key−off EVAP system pump status: ON or OFF	—	Active Test support data
EVAP VENT VAL	Key−off EVAP system vent valve status: ON or OFF	—	Active Test support data
TC/TE1	TC and TE1 terminal of DLC3: ON or OFF	—	—
VVTL AIM ANGL #1	VVT aim angle (bank 1): Min.: 0 %, Max.: 100 %	0 %: Idling	VVT duty signal value during intrusive operation
VVTL AIM ANGL #2	VVT aim angle (bank 2): Min.: 0 %, Max.: 100 %	0 %: Idling	VVT duty signal value during intrusive operation
VVT CHNG ANGL #1	VVT change angle (Bank 1): Min.: 0°FR, Max.: 60°FR	0 to 5 °FR: Idling	Displacement angle during intrusive operation
VVT CHNG ANGL #2	VVT change angle (Bank 2): Min.: 0°FR, Max.: 60°FR	0 to 5 °FR: Idling	Displacement angle during intrusive operation
VVT OCV DUTY B1	VVT OCV operation duty (Bank 1): Min.: 0 %, Max.: 100 %	0 %: Idling	Requested duty value for intrusive operation
VVT OCV DUTY B2	VVT OCV operation duty (Bank 2): Min.: 0 %, Max.: 100 %	0 %: Idling	Requested duty value for intrusive operation
FC IDL	Fuel cut idle: ON or OFF	ON: Fuel cut operation	FC IDL = ”ON” when throttle valve fully closed and engine speed over 2,800 rpm

FC TAU	Fuel cut TAU: Fuel cut during very light load: ON or OFF	ON: Fuel cut operating	The fuel cut being performed under very light load to prevent the engine combustion from becoming incomplete
IGNITION	Ignition counter: Min.: 0, Max.: 800	0 to 800	—
CYL #1, #2, #3, #4, #5, #6, #7, #8	Misfire ratio of the cylinder 1 to 8: Min.: 0, Max.: 255	0 %	This item displayed in only idling
CYL ALL	All cylinders misfire rate: Min.: 0, Max.: 255	0 to 35	—
MISFIRE RPM	Engine RPM for first misfire range: Min.: 0 rpm, Max.: 6,375 rpm	0 rpm: Misfire 0	—
MISFIRE LOAD	Engine load for first misfire range: Min.: 0 g/rev, Max.: 3.98 g/rev	0 g/rev: Misfire 0	—
MISFIRE MARGIN	Misfire monitoring: MIn.: −100 %, Max.: 99.22 %	−100 to 99.2 %	Misfire detecting margin
#CODES	#Codes: Min.: 0, Max.: 255	—	Number of detected DTCs
CHECK MODE	Check mode: 0: ON, 1: OFF	ON: Check mode ON	See page DI−463
SPD TEST	Check mode result for vehicle speed sensor: 0: COMPL, 1: INCOMPL	—	—
AS TEST	Check mode result for secondary air injection system: 0: COMPL, 1: INCOMPL	—	—
MISFIRE TEST	Check mode result for misfire monitor: 0: COMPL, 1: INCOMPL	—	—
OXS1 TEST	Check mode result for HO2 sensor (Bank 1): 0: COMPL, 1: INCOMPL	—	—
OXS2 TEST	Check mode result for HO2 sensor (Bank 2): 0: COMPL, 1: INCOMPL	—	—
A/F SSR TEST B1	Check mode result for air−fuel ratio sensor (Bank 1): 0: COMPL, 1: INCOMPL	—	—
A/F SSR TEST B2	Check mode result for air−fuel ratio sensor (Bank 2): 0: COMPL, 1: INCOMPL	—	—
MIL	MIL status: ON or OFF	ON: MIL ON	—
MIL ON RUN DIST	MIL ON Run Distance: Min.: 0 second, Max.: 65,535 seconds	Distance after DTC detected	—
MIL ON RUN TIME	Running time from MIL ON: Min.: 0 minute, Max.: 65,535 minutes	Equivalent to running time after MIL was ON	—
ENG RUN TIME	Engine run time: Min.: 0 second, Max.: 65,535 seconds	Time after engine start	Service data
TIME DTC CLEAR	Time after DTC cleared: Min.: 0 minute, Max.: 65,535 minutes	Equivalent to time after DTCs were erased	—

DIST DTC CLEAR	Distance after DTC cleared: Min.: 0 km/h, Max.: 65535 km/h	Equivalent to drive distance after DTCs were erased	—
WU CYC DTC CLEAR	Warm−up cycle after DTC cleared: Min.: 0, Max.: 255	—	Number of warm−up cycles after DTC cleared
MODEL CODE	Model code:	—	Identifying the model code: UCK30 (2WD), UCK40 (4WD)
ENGINE TYPE	Engine type:	—	Identifying the engine type: 2UZFE
CYLINDER NUMBER	Cylinder number: Min.: 0, Max.: 255	—	Identifying the cylinder number: 8
TRANSMISSION	Transmission type:	—	Identifying the transmission type: ECT(5AT)
DESTINATION	Destination	—	Identifying the destination: A (America)
MODEL YEAR	Model year: Min.: 0, Max.: 255	—	Identifying the model year: 200#
SYSTEM	System identification	—	Identifying the engine system: GASLIN (gasoline engine)
AI STATUS	AI operation prohibit: OK or NG	OK	

*1: If no idling conditions are specified, the transmission gear selector lever should be in the N or P position, and the A/C switch and all accessory switches should be OFF.

2. ACTIVE TEST

HINT:

Performing an ACTIVE TEST enables components including the relays, VSV (Vacuum Switching Valve), and actuators, to be operated without removing any parts. The ACTIVE TEST can be performed with a hand−held tester. Performing an ACTIVE TEST as the first step of troubleshooting is one method of shortening diagnostic time.

DATA LIST can be displayed during ACTIVE TESTs.

(a) Connect a hand−held tester to the DLC3.
(b) Turn the ignition switch to ON.
(c) Turn the tester ON.
(d) Select the following menu items: DIAGNOSIS / ENHANCED OBD II / ACTIVE TEST.
(e) Perform the ACTIVE TEST by referring to the table below.

Hand−held Tester Displays	Test Details	Control Ranges	Diagnostic Notes
INJ VOL	Change injection volume	Between −12 % and 25 %	• All injectors tested at the same time • Perform test at less than 3,000 rpm • Injection volume can be changed in 1 % graduations within control range
A/F CONTROL	Change injection volume	Lower by 12.5 % or increase by 25 %	• Perform test at less than 3,000 rpm • A/F CONTROL enables checking and graphing of A/F (Air Fuel Ratio) sensor and Heated Oxygen (HO2) sensor voltage outputs • To conduct test, select following menu items: ACTIVE TEST / A/F CONTROL / USER DATA / AFS B1S1 and O2S B1S2, and press YES and ENTER followed by F4
EVAP VSV (ALONE)	Activate EVAP VSV control	ON/OFF	−
VVT CTRL B1	Turn on and off OCV (Oil Control Valve)	ON/OFF	• Engine stalls or idles roughly when OCV turned ON • Normal engine running or idling when OCV off
VVT CTRL B2	Turn on and off OCV (Oil Control Valve)	ON/OFF	• Engine stalls or idles roughly when OCV turned ON • Normal engine running or idling when OCV off
A/C CUT SIG	Control A/C cut signal	ON/OFF	−
FUEL PUMP/SPD	Activate fuel pump (C/OPN Relay)	ON/OFF	−
TC/TE1	Turn on and off TC and TE1 connection	ON/OFF	• ON: TC and TE1 connected • OFF: TC and TE1 disconnected
FC IDL PROHBT	Prohibit idling fuel cut control	ON/OFF	−
ETCS OPEN SLOW	Throttle actuator	ON: throttle valve opens slowly	This test is possible when the following conditions are met: • Ignition switch ON • Engine does not start • Fully depressing accelerator pedal (APP: 58 degrees or more)
ETCS CLOSE SLOW	Throttle actuator	ON: throttle valve closes slowly	Same as above
ETCS OPEN FAST	Throttle actuator	ON: throttle valve opens fast	Same as above
ETCS CLOSE FAST	Throttle actuator	ON: throttle valve closes fast	Same as above

FUEL CUT #1	Cylinder #1 injector fuel cut	ON/OFF	This test is possible during vehicle stopping and engine idling.
FUEL CUT #2	Cylinder #2 injector fuel cut	ON/OFF	Same as above
FUEL CUT #3	Cylinder #3 injector fuel cut	ON/OFF	Same as above
FUEL CUT #4	Cylinder #4 injector fuel cut	ON/OFF	Same as above
FUEL CUT #5	Cylinder #5 injector fuel cut	ON/OFF	Same as above
FUEL CUT #6	Cylinder #6 injector fuel cut	ON/OFF	Same as above
FUEL CUT #7	Cylinder #7 injector fuel cut	ON/OFF	Same as above
FUEL CUT #8	Cylinder #8 injector fuel cut	ON/OFF	Same as above
VENT VALVE (ALONE)	Activate vent valve (built into pump module)	ON/OFF	−
VCUUM PUMP	Activate vacuum pump (built into pump module)	ON/OFF	−

3. SYSTEM CHECK

HINT:

Performing a SYSTEM CHECK enables the system, which consists of multiple actuators, to be operated without removing any parts. In addition, it can show whether or not any DTCs are set, and can detect potential malfunctions in the system. The SYSTEM CHECK can be performed with a hand−held tester.

(a) Connect a hand−held tester to the DLC3.
(b) Turn the ignition switch to ON.
(c) Turn the tester ON.
(d) Select the following menu items: DIAGNOSIS / ENHANCED OBD II / SYSTEM CHECK.
(e) Perform the SYSTEM CHECK by referring to the table below.

Hand−held Tester Displays	Test Details	Recommended Fuel Temperatures	Diagnostic Notes
EVAP SYS CHECK (AUTO OPERATION)	Perform 5 steps in order to operate EVAP key−off monitor automatically	35°C (95°F) or less	• If no DTCs in PENDING CODE after performing this test, system functioning normally • Refer to EVAP Inspection Procedure on page DI−884
EVAP SYS CHECK (MANUAL OPERATION)	Perform 5 steps in order to operate EVAP key−off monitor manually	35°C (95°F) or less	• Used to detect malfunctioning parts • Refer to EVAP Inspection Procedure on page DI−884
AI INJ CHECK (AUTO OPERATION)	Perform 6 steps in order to operate air injection system automatically	−	• If no DTCs in PENDING CODE after performing this test, system functioning normally
AI INJ CHECK (MANUAL OPERATION)	Perform 8 operations in order to operate air injection system monitor manually	−	• Used to detect malfunctioning parts

DIDQR−01

DEFINITION OF TERMS

Term	Definition
Monitor description	Description of what the ECM monitors and how it detects malfunctions (monitoring purpose and its details).
Related DTCs	A group of diagnostic trouble codes that are output by the ECM based on the same malfunction detection logic.
Typical enabling condition	Preconditions that allow the ECM to detect malfunctions. With all preconditions satisfied, the ECM sets the DTC when the monitored value(s) exceeds the malfunction threshold(s).
Sequence of operation	The priority order that is applied to monitoring, if multiple sensors and components are used to detect the malfunction. When a sensor is being monitored, the next sensor or component will not be monitored until the sensor monitoring is finished.
Required sensor/components	The sensors and components that are used by the ECM to detect malfunctions.
Frequency of operation	The number of times that the ECM checks for malfunctions per driving cycle. ”Once per driving cycle” means that the ECM detects the malfunction only one time during a single driving cycle. ”Continuous” means that the ECM detects malfunction every time an enabling condition is met.
Duration	The minimum time that the ECM must sense a continuous deviation in the monitored value(s) before setting a DTC. This timing begins after the ”typical enabling conditions” are met.
Malfunction thresholds	Beyond this value, the ECM will conclude that there is a malfunction and set a DTC.
MIL operation	MIL illumination timing after a defect is detected. ”Immediately” means that the ECM illuminates MIL the instant the ECM determines that there is a malfunction. ”2 driving cycle” means that the ECM illuminates MIL if the same malfunction is detected again in the 2nd driving cycle.

DI1L4−25

DIAGNOSTIC TROUBLE CODE CHART

HINT:

Parameters listed in the chart may not be exactly the same as your reading due to the type of instrument or other factors.

If a malfunction code is displayed during the DTC check in the check mode, check the circuit for the listed in the table below. For details of each code, refer to the ''See page'' under the respective ''DTC No.'' in the DTC chart.

DTC No. (See page)	Detection Item	Trouble Area	MIL*1	Memory
P0010 (DI−492)	Camshaft Position ”A” Actuator Circuit (Bank 1)	• Open or short in OCV circuit • OCV • ECM	○	○
P0011 (DI−498)	Camshaft Position ”A” −Timing Over− Advanced or System Performance (Bank 1)	• Valve timing • OCV • VVT controller assembly • ECM	○	○
P0012 (DI−498)	Camshaft Position ”A” −Timing Over− Retarded (Bank 1)	• Valve timing • OCV • VVT controller assembly • ECM	○	○
P0016 (DI−504)	Crankshaft Position − Camshaft Position Correlation (Bank 1 Sensor A)	• Open or short in VVT sensor circuit • VVT sensor • ECM	○	○
P0018 (DI−504)	Crankshaft Position − Camshaft Position Correlation (Bank 2 Sensor A)	• Open or short in VVT sensor circuit • VVT sensor • ECM	○	○
P0020 (DI−492)	Camshaft Position ”A” Actuator Circuit (Bank 2)	• Open or short in OCV circuit • OCV • ECM	○	○
P0021 (DI−498)	Camshaft Position ”A” −Timing Over− Advanced or System Performance (Bank 2)	• Valve timing • OCV • VVT controller assembly • ECM	○	○
P0022 (DI−498)	Camshaft Position ”A” −Timing Over− Retarded (Bank 2)	• Valve timing • OCV • VVT controller assembly • ECM	○	○
P0031 (DI−507)	Oxygen (A/F) Sensor Heater Control Circuit Low (Bank 1 Sensor 1)	• Open in heater circuit of A/F sensor • A/F sensor heater • A/F relay • ECM	○	○
P0032 (DI−507)	Oxygen (A/F) Sensor Heater Control Circuit High (Bank 1 Sensor 1)	• Short in heater circuit of A/F sensor • A/F sensor heater • A/F relay • ECM	○	○
P0037 (DI−512)	Oxygen Sensor Heater Control Circuit Low (Bank 1 Sensor 2)	• Open in heater circuit of heated oxygen sensor • Heated oxygen sensor heater • EFI relay • ECM	○	○
P0038 (DI−512)	Oxygen Sensor Heater Control Circuit High (Bank 1 Sensor 2)	• Short in heater circuit of heated oxygen sensor • Heated oxygen sensor heater • EFI relay • ECM	○	○

P0051 (DI−507)	Oxygen (A/F) Sensor Heater Control Circuit Low (Bank 2 Sensor 1)	• Open in heater circuit of A/F sensor • A/F sensor heater • A/F relay • ECM	○	○
P0052 (DI−507)	Oxygen (A/F) Sensor Heater Control Circuit High (Bank 2 Sensor 1)	• Short in heater circuit of A/F sensor • A/F sensor heater • A/F relay • ECM	○	○
P0057 (DI−512)	Oxygen Sensor Heater Control Circuit Low (Bank 2 Sensor 2)	• Open in heater circuit of heated oxygen sensor • Heated oxygen sensor heater • EFI relay • ECM	○	○
P0058 (DI−512)	Oxygen Sensor Heater Control Circuit High (Bank 2 Sensor 2)	• Short in heater circuit of heated oxygen sensor • Heated oxygen sensor heater • EFI relay • ECM	○	○
P0100 (DI−522)	Mass or Volume Air Flow Circuit	• Open or short in mass air flow meter circuit • Mass air flow meter • ECM	○	○
P0101 (DI−531)	Mass or Volume Air Flow Circuit Range/Performance Problem	• Mass air flow meter	○	○
P0102 (DI−522)	Mass or Volume Air Flow Circuit Low Input	• Open or short in mass air flow meter circuit • Mass air flow meter • ECM	○	○
P0103 (DI−522)	Mass or Volume Air Flow Circuit High Input	• Open or short in mass air flow meter circuit • Mass air flow meter • ECM	○	○
P0110 (DI−534)	Intake Air Temperature Circuit	• Open or short in intake air temperature sensor circuit • Intake air temperature sensor (built in mass air flow meter) • ECM	○	○
P0112 (DI−534)	Intake Air Temperature Circuit Low Input	• Open or short in intake air temperature sensor circuit • Intake air temperature sensor (built in mass air flow meter) • ECM	○	○
P0113 (DI−534)	Intake Air Temperature Circuit High Input	• Open or short in intake air temperature sensor circuit • Intake air temperature sensor (built in mass air flow meter) • ECM	○	○
P0115 (DI−540)	Engine Coolant Temperature Circuit	• Open or short in engine coolant temperature sensor circuit • Engine coolant temperature sensor • ECM	○	○
P0116 (DI−546)	Engine Coolant Temperature Circuit Range/Performance Problem	• Engine coolant temperature sensor	○	○
P0117 (DI−540)	Engine Coolant Temperature Circuit Low Input	• Open or short in engine coolant temperature sensor circuit • Engine coolant temperature sensor • ECM	○	○
P0118 (DI−540)	Engine Coolant Temperature Circuit High Input	• Open or short in engine coolant temperature sensor circuit • Engine coolant temperature sensor • ECM	○	○
P0120 (DI−548)	Throttle/Pedal Position Sensor/ Switch ”A” Circuit	• Open or short in throttle control motor and sensor circuit • Throttle control motor and sensor • ECM	○	○
P0121 (DI−558)	Throttle/Pedal Position Sensor/ Switch ”A” Circuit Range/Performance Problem	• Throttle control motor and sensor	○	○

P0122 (DI−548)	Throttle/Pedal Position Sensor/ Switch ”A” Circuit Low Input	• Short in throttle control motor and sensor circuit • Throttle control motor and sensor • Short in VTA1 circuit • Open in VC circuit • ECM	○	○
P0123 (DI−548)	Throttle/Pedal Position Sensor/ Switch ”A” Circuit High Input	• Open in throttle control motor and sensor circuit • Throttle control motor and sensor • Open in VTA1 circuit • Open in E2 circuit • VC and VTA1 circuit are short−circuited • ECM	○	○
P0125 (DI−560)	Insufficient Coolant Temperature for Closed Loop Fuel Control	• Cooling system • Engine coolant temperature sensor • Thermostat	○	○
P0128 (DI−563)	Coolant Thermostat (Coolant Temperature Below Thermostat Regulating Temperature)	• Thermostat • Cooling system • Engine coolant temperature sensor • ECM	○	○
P0136 (DI−567)	Oxygen Sensor Circuit Malfunction (Bank 1 Sensor 2)	• Open or short in HO2 sensor (sensor 2) circuit • HO2 sensor (sensor 2) • HO2 sensor heater (sensor 2) • Air−Fuel Ratio (A/F) sensor (sensor 1) • EFI relay • Gas leakage from exhaust system	○	○
P0137 (DI−567)	Oxygen Sensor Circuit Low Voltage (Bank 1 Sensor 2)	• Open in HO2 sensor (sensor 2) circuit • HO2 sensor (sensor 2) • HO2 sensor heater (sensor 2) • EFI relay • Gas leakage from exhaust system	○	○
P0138 (DI−567)	Oxygen Sensor Circuit High Voltage (Bank 1 Sensor 2)	• Short in HO2 sensor (sensor 2) circuit • HO2 sensor (sensor 2) • ECM internal circuit malfunction	○	○
P0156 (DI−567)	Oxygen Sensor Circuit Malfunction (Bank 2 Sensor 2)	• Open or short in HO2 sensor (sensor 2) circuit • HO2 sensor (sensor 2) • HO2 sensor heater (sensor 2) • Air−Fuel Ratio (A/F) sensor (sensor 1) • EFI relay • Gas leakage from exhaust system	○	○
P0157 (DI−567)	Oxygen Sensor Circuit Low Voltage (Bank 2 Sensor 2)	• Open in HO2 sensor (sensor 2) circuit • HO2 sensor (sensor 2) • HO2 sensor heater (sensor 2) • EFI relay • Gas leakage from exhaust system	○	○
P0158 (DI−567)	Oxygen Sensor Circuit High Voltage (Bank 2 Sensor 2)	• Short in HO2 sensor (sensor 2) circuit • HO2 sensor (sensor 2) • ECM internal circuit malfunction	○	○

P0171 (DI−586)	System too Lean (Bank 1)	• Air induction system • Injector blockage • Mass air flow meter • Engine coolant temperature sensor • Fuel pressure • Gas leakage on exhaust system • Open or short in heated oxygen sensor (bank 1 sensor 1) circuit • Heated oxygen sensor (bank 1 sensor 1) • Heated oxygen sensor heater • EFI relay • PCV piping • ECM	○	○
P0172 (DI−586)	System too Rich (Bank 1)	• Injector leak, blockage • Mass air flow meter • Engine coolant temperature sensor • Ignition system • Fuel pressure • Gas leakage in exhaust system • Open or short in heated oxygen sensor (bank 1 sensor 1) circuit • Heated oxygen sensor (bank 1 sensor 1) • ECM	○	○
P0174 (DI−586)	System too Lean (Bank 2)	• Air induction system • Injector blockage • Mass air flow meter • Engine coolant temperature sensor • Fuel pressure • Gas leakage on exhaust system • Open or short in heated oxygen sensor (bank 2 sensor 1) circuit • Heated oxygen sensor (bank 2 sensor 1) • Heated oxygen sensor heater • EFI relay • PCV piping • ECM	○	○
P0175 (DI−586)	System too Rich (Bank 2)	• Injector leak, blockage • Mass air flow meter • Engine coolant temperature sensor • Ignition system • Fuel pressure • Gas leakage in exhaust system • Open or short in heated oxygen sensor (bank 2 sensor 1) circuit • Heated oxygen sensor (bank 2 sensor 1) • ECM	○	○
P0220 (DI−548)	Throttle/Pedal Position Sensor/ Switch ”B” Circuit	• Throttle control motor and sensor • ECM	○	○
P0222 (DI−548)	Throttle/Pedal Position Sensor/ Switch ”B” Circuit Low Input	• Throttle control motor and sensor • Short in VTA2 circuit • Open in VC circuit • ECM	○	○
P0223 (DI−548)	Throttle/Pedal Position Sensor/ Switch ”B” Circuit High Input	• Throttle control motor and sensor • Open in VTA2 circuit • Open in E2 circuit • VC and VTA2 circuit are short−circuited • ECM	○	○

P0230 (DI−600)	Fuel Pump Primary Circuit	• Open or short in fuel pump relay circuit • Fuel pump relay • Circuit opening relay • Fuel pump • ECM	−	○
P0300 (DI−605)	Random/Multiple Cylinder Misfire Detected	• Open or short in engine wire • Connector connection • Vacuum hose connection • Ignition system • Injector • Fuel pressure • Mass air flow meter • Engine coolant temperature sensor • Compression pressure • Valve clearance • Valve timing • PCV piping • ECM	○*2	○
P0301 (DI−605)	Cylinder 1 Misfire Detected	• Open or short in engine wire • Connector connection • Vacuum hose connection • Ignition system • Injector • Fuel pressure • Mass air flow meter • Engine coolant temperature sensor • Compression pressure • Valve clearance • Valve timing • PCV piping • ECM	○*2	○
P0302 (DI−605)	Cylinder 2 Misfire Detected	• Open or short in engine wire • Connector connection • Vacuum hose connection • Ignition system • Injector • Fuel pressure • Mass air flow meter • Engine coolant temperature sensor • Compression pressure • Valve clearance • Valve timing • PCV piping • ECM	○*2	○
P0303 (DI−605)	Cylinder 3 Misfire Detected	• Open or short in engine wire • Connector connection • Vacuum hose connection • Ignition system • Injector • Fuel pressure • Mass air flow meter • Engine coolant temperature sensor • Compression pressure • Valve clearance • Valve timing • PCV piping • ECM	○*2	○

P0304 (DI−605)	Cylinder 4 Misfire Detected	• Open or short in engine wire • Connector connection • Vacuum hose connection • Ignition system • Injector • Fuel pressure • Mass air flow meter • Engine coolant temperature sensor • Compression pressure • Valve clearance • Valve timing • PCV piping • ECM	○*2	○
P0305 (DI−605)	Cylinder 5 Misfire Detected	• Open or short in engine wire • Connector connection • Vacuum hose connection • Ignition system • Injector • Fuel pressure • Mass air flow meter • Engine coolant temperature sensor • Compression pressure • Valve clearance • Valve timing • PCV piping • ECM	○*2	○
P0306 (DI−605)	Cylinder 6 Misfire Detected	• Open or short in engine wire • Connector connection • Vacuum hose connection • Ignition system • Injector • Fuel pressure • Mass air flow meter • Engine coolant temperature sensor • Compression pressure • Valve clearance • Valve timing • PCV piping • ECM	○*2	○
P0307 (DI−605)	Cylinder 7 Misfire Detected	• Open or short in engine wire • Connector connection • Vacuum hose connection • Ignition system • Injector • Fuel pressure • Mass air flow meter • Engine coolant temperature sensor • Compression pressure • Valve clearance • Valve timing • PCV piping • ECM	○*2	○

P0308 (DI−605)	Cylinder 8 Misfire Detected	• Open or short in engine wire • Connector connection • Vacuum hose connection • Ignition system • Injector • Fuel pressure • Mass air flow meter • Engine coolant temperature sensor • Compression pressure • Valve clearance • Valve timing • PCV piping • ECM	○*2	○
P0327 (DI−626)	Knock Sensor 1 Circuit Low Input (Bank 1 or Single Sensor)	• Short in knock sensor circuit • Knock sensor • ECM	○	○
P0328 (DI−626)	Knock Sensor 1 Circuit High Input (Bank 1 or Single Sensor)	• Open in knock sensor circuit • Knock sensor • ECM	○	○
P0332 (DI−626)	Knock Sensor 2 Circuit High Input (Bank 2)	• Open in knock sensor circuit • Knock sensor • ECM	○	○
P0333 (DI−626)	Knock Sensor 2 Circuit High Input (Bank 2)	• Open in knock sensor circuit • Knock sensor • ECM	○	○
P0335 (DI−632)	Crankshaft Position Sensor ”A” Circuit	• Open or short in crankshaft position sensor circuit • Crankshaft position sensor • Signal plate • ECM	○	○
P0339 (DI−632)	Crankshaft Position Sensor ”A” Circuit Intermittent	• Open or short in crankshaft position sensor circuit • Crankshaft position sensor • Signal plate • ECM	−	○
P0340 (DI−637)	Camshaft Position Sensor ”A” Circuit (Bank 1 or Single Sensor)	• Open or short in camshaft position sensor circuit • Camshaft position sensor • LH camshaft timing pulley • Jumping teeth of timing belt • ECM	○	○
P0341 (DI−637)	Camshaft Position Sensor ”A” Circuit Range/Performance (Bank 1 or Single Sensor)	• Open or short in camshaft position sensor circuit • Camshaft position sensor • LH camshaft timing pulley • Jumping teeth of timing belt • ECM	○	○
P0345 (DI−637)	Camshaft Position Sensor ”A” Circuit (Bank 2)	• Open or short in camshaft position sensor circuit • VVT sensor • ECM	○	○
P0346 (DI−637)	Camshaft Position Sensor ”A” Circuit Range/Performance (Bank 2)	• Open or short in camshaft position sensor circuit • VVT sensor • ECM	○	○
P0351 (DI−642)	Ignition Coil ”A” Primary/Secondary Circuit	• Open or short in IGF 1 and IGT 1 circuit from No. 1 ignition coil with igniter to ECM • No. 1 ignition coil with igniter • Ignition system • ECM	○	○

P0352 (DI−642)	Ignition Coil "B" Primary/Secondary Circuit	• Open or short in IGF 2 and IGT 2 circuit from No. 2 ignition coil with igniter to ECM • No. 2 ignition coil with igniter • Ignition system • ECM	○	○
P0353 (DI−642)	Ignition Coil "C" Primary/Secondary Circuit	• Open or short in IGF 2 and IGT 3 circuit from No. 3 ignition coil with igniter to ECM • No. 3 ignition coil with igniter • Ignition system • ECM	○	○
P0354 (DI−642)	Ignition Coil "D" Primary/Secondary Circuit	• Open or short in IGF 1 and IGT 4 circuit from No. 4 ignition coil with igniter to ECM • No. 4 ignition coil with igniter • Ignition system • ECM	○	○
P0355 (DI−642)	Ignition Coil "E" Primary/Secondary Circuit	• Open or short in IGF 2 and IGT 5 circuit from No. 5 ignition coil with igniter to ECM • No. 5 ignition coil with igniter • Ignition system • ECM	○	○
P0356 (DI−642)	Ignition Coil "F" Primary/Secondary Circuit	• Open or short in IGF 1 and IGT 6 circuit from No. 6 ignition coil with igniter to ECM • No. 6 ignition coil with igniter • Ignition system • ECM	○	○
P0357 (DI−642)	Ignition Coil "G" Primary/Secondary Circuit	• Open or short in IGF 1 and IGT 7 circuit from No. 7 ignition coil with igniter to ECM • No. 7 ignition coil with igniter • Ignition system • ECM	○	○
P0358 (DI−642)	Ignition Coil "H" Primary/Secondary Circuit	• Open or short in IGF 2 and IGT 8 circuit from No. 8 ignition coil with igniter to ECM • No. 8 ignition coil with igniter • Ignition system • ECM	○	○
P0412 (DI−656)	Air Injection System Air Switching Valve Malfunction	• Open in air switching valve drive circuit • Short between air switching valve circuit and +B circuit • Air injection driver • ECM	○	○
P0418 (DI−665)	Air Injection System Air Pump Malfunction	• Open in air pump drive circuit • Short between air pump circuit and +B circuit • Air injection driver • ECM	○	○
P0420 (DI−672)	Catalyst System Efficiency Below Threshold (Bank 1)	• Gas leakage on exhaust system • Heated oxygen sensor (bank 1 sensor 1, 2) • Three−way catalytic converter	○	○
P0430 (DI−672)	Catalyst System Efficiency Below Threshold (Bank 2)	• Gas leakage on exhaust system • Heated oxygen sensor (bank 2 sensor 1, 2) • Three−way catalytic converter	○	○
P043E (DI−869)	Evaporate Emission System Reference Orifice Clog Up	• Pump module	○	○
P043F (DI−869)	Evaporate Emission System Reference Orifice High Flow	• Pump module	○	○

P0441 (DI−680)	Evaporative Emission Control System Incorrect Purge Flow	• Purge valve • Purge valve circuit (between purge valve and ECM) • Leakage from EVAP line (between purge valve and intake manifold) • EVAP line (between purge valve and canister) clogged • ECM	○	○
P0450 (DI−687)	Evaporative Emission Control System Pressure Sensor/Switch [Fuel Tank Pressure Sensor]	• Pump module (including pressure sensor)	○	○
P0451 (DI−687)	Evaporative Emission Control System Pressure Sensor/Switch Range/Performance	• Pump module (including pressure sensor)	○	○
P0452 (DI−687)	Evaporative Emission Control System Pressure Sensor/Switch Low Input	• Pump module (including pressure sensor) • Connector/Wire harness (between pump module and ECM) • ECM	○	○
P0453 (DI−687)	Evaporative Emission Control System Pressure Sensor/Switch High Input	• Pump module (include pressure sensor) • Connector/Wire harness (between pump module and ECM) • ECM	○	○
P0455 (DI−696)	Evaporative Emission Control System Leak Detected (Gross Leak)	• Fuel tank cap (loose) • Leakage from EVAP line (between canister and fuel tank) • Leakage from EVAP line (between purge valve and canister) • Leakage from pump module • Leakage from fuel tank • Leakage from canister	○	○
P0456 (DI−696)	Evaporative Emission Control System Leak Detected (Very Small Leak)	• Same as DTC No. P0445	○	○
P0500 (DI−701)	Vehicle Speed Sensor ”A”	• Combination meter • Open or short in vehicle speed sensor circuit • Vehicle speed sensor • ECM	○	○
P0503 (DI−701)	Vehicle Speed Sensor ”A” Intermittent/Erratic/High	• Combination meter • Open or short in vehicle speed sensor circuit • Vehicle speed sensor • ECM	−	○
P0504 (DI−706)	Brake Switch ”A”/”B” Correlation	• Short in stop lamp switch signal circuit • STOP fuse • Stop lamp switch • ECM	−	○
P0505 (DI−712)	Idle Air Control System	• Air induction system • Electric throttle control system • PCV hose connection	○	○
P050A (DI−715−1)	Cold Start Idle Air Control System Performance	• ETCS (Electronic Throttle Control System) • Mass air flow meter • Air induction system • PCV hose connections • ECM	○	○
P0560 (DI−716)	System Voltage	• Back−up power source circuit • EFI No. 1 fuse • ECM	○	○
P0604 (DI−721)	Internal Control Module Random Access Memory (RAM) Error	• ECM	○	○
P0606 (DI−721)	ECM/PCM Processor	• ECM	○	○

P0607 (DI−721)	Control Module Performance	• ECM	○	○
P0617 (DI−723)	Starter Relay Circuit High	• Park/neutral position switch • Starter relay circuit • Ignition switch • ECM	○	○
P0630 (DI−728)	VIN not Programmed or Mis-match−ECM/PCM	• ECM	○	○
P0657 (DI−721)	Actuator Supply Voltage Circuit/ Open	• ECM	○	○
P0705 (DI−1159)	Transmission Range Sensor Cir-cuit Malfunction (PRNDL Input)	• Electronic Controlled Automatic Transaxle (ECT)	○	○
P0710 (DI−1166)	Transmission Fluid Temperature Sensor ”A” Circuit	• Electronic control automatic transmission (ECT)	○	○
P0711 (DI−1172)	Transmission Fluid Temperature Sensor ”A” Performance	• Electronic control automatic transmission (ECT)	○	○
P0712 (DI−1166)	Transmission Fluid Temperature Sensor ”A” Circuit Low Input	• Electronic control automatic transmission (ECT)	○	○
P0713 (DI−1166)	Transmission Fluid Temperature Sensor ”A” Circuit High Input	• Electronic control automatic transmission (ECT)	○	○
P0717 (DI−1175)	Input/Turbine Speed Sensor ”A” Circuit No Signal	• Electronic control automatic transmission (ECT)	○	○
P0722 (DI−1180)	Output Speed Sensor Circuit No Signal	• Electronic control automatic transmission (ECT)	○	○
P0724 (DI−1184)	Brake Switch ”B” Circuit High	• Electronic control automatic transmission (ECT)	○	○
P0748 (DI−1188)	Pressure Control Solenoid ”A” Electrical (Shift Solenoid Valve SL1)	• Electronic control automatic transmission (ECT)	○	○
P0751 (DI−1193)	Shift Solenoid ”A” Performance (Shift Solenoid Valve S1)	• Electronic control automatic transmission (ECT)	○	○
P0756 (DI−1199)	Shift Solenoid ”B” Performance (Shift Solenoid Valve S2)	• Electronic control automatic transmission (ECT)	○	○
P0771 (DI−1205)	Shift Solenoid ”E” Performance (Shift Solenoid Valve SR)	• Electronic control automatic transmission (ECT)	○	○
P0776 (DI−1210)	Pressure Control Solenoid ”B” Performance (Shift Solenoid Valve SL2)	• Electronic control automatic transmission (ECT)	○	○
P0778 (DI−1216)	Pressure Control Solenoid ”B” Electrical (Shift Solenoid Valve SL2)	• Electronic control automatic transmission (ECT)	○	○
P0781 (DI−1221)	1−2 Shift (1−2 Shift Valve)	• Electronic control automatic transmission (ECT)	○	○
P0973 (DI−1226)	Shift Solenoid ”A” Control Circuit Low (Shift solenoid Valve S1)	• Electronic control automatic transmission (ECT)	○	○
P0974 (DI−1226)	Shift Solenoid ”A” Control Circuit High (Shift solenoid Valve S1)	• Electronic control automatic transmission (ECT)	○	○
P0976 (DI−1231)	Shift Solenoid ”B” Control Circuit Low (Shift solenoid Valve S2)	• Electronic control automatic transmission (ECT)	○	○
P0977 (DI−1231)	Shift Solenoid ”B” Control Circuit High (Shift solenoid Valve S2)	• Electronic control automatic transmission (ECT)	○	○

P0985 (DI−1236)	Shift Solenoid ”E” Control Circuit Low (Shift Solenoid Valve SR)	• Electronic control automatic transmission (ECT)	○	○
P0986 (DI−1236)	Shift Solenoid ”E” Control Circuit High (Shift Solenoid Valve SR)	• Electronic control automatic transmission (ECT)	○	○
P1340 (DI−730)	Camshaft Position Sensor ”A” Circuit (Bank 1 Sensor 2)	• Open or short in camshaft position sensor circuit • Camshaft position sensor • LH camshaft timing pulley • ECM	○	○
P1341 (DI−730)	Camshaft Position Sensor ”A” Circuit Range/Performance (Bank 1 Sensor 2)	• Open or short in camshaft position sensor circuit • Camshaft position sensor • LH camshaft timing pulley • ECM	○	○
P1440 (DI−735)	Scondary Air Injection System Control Valve Circuit Bank 1	• Open or short in VSV for air injection control circuit • ECM	○	○
P1441 (DI−739)	Scondary Air Injection System Switching Valve No.2 Bank 1 Stuck Open	• VSV for air injection control circuit (Bank 1) • Air switching valve No.2 (Bank 1) • VSV for air injection system (Bank 1) • ECM	○	○
P1442 (DI−754)	Scondary Air Injection System Switching Valve No.2 Bank 1 Stuck Close	• VSV for air injection control circuit (Bank 1) • Vacuum hose (VSV for air injection control − air switching valve No.2) • Air injector pipe (Air switching valve No.2 − exhaust manifold) • Air switching valve No.2 (Bank 1) • VSV for air injection control (Bank 1) • ECM	○	○
P1443 (DI−735)	Scondary Air Injection System Control Valve Circuit Bank 2	• Open or short in VSV for air injection control circuit • ECM	○	○
P1444 (DI−739)	Scondary Air Injection System Switching Valve No.2 Bank 2 Stuck Open	• VSV for air injection control circuit (Bank 2) • Air switching valve No.2 (Bank 2) • VSV for air injection system (Bank 2) • ECM	○	○
P1445 (DI−754)	Scondary Air Injection System Switching Valve No.2 Bank 2 Stuck Cloes	• VSV for air injection control circuit (Bank 2) • Vacuum hose (VSV for air injection control − air switching valve No.2) • Air injector pipe (Air switching valve No.2 − exhaust manifold) • Air switching valve No.2 (Bank 2) • VSV for air injection control (Bank 2) • ECM	○	○
P1613 (DI−767)	Air Injection System Air Injection Driver	• Short between air pump circuit and body ground • Open in air pump drive circuit • Short between air pump circuit and +B circuit • Air injection driver • ECM	○	○
P2102 (DI−778)	Throttle Actuator Control Motor Circuit Low	• Open in throttle control motor and sensor circuit • Throttle control motor and sensor • ECM	○	○
P2103 (DI−778)	Throttle Actuator Control Motor Circuit High	• Short in throttle control motor and sensor circuit • Throttle control motor and sensor • Throttle valve • Throttle body • ECM	○	○
P2111 (DI−782)	Throttle Actuator Control System − Stuck Open	• Throttle control motor and sensor circuit • Throttle control motor and sensor • Throttle valve • Throttle body	○	○

P2112 (DI−782)	Throttle Actuator Control System − Stuck Closed	• Throttle control motor and sensor circuit • Throttle control motor and sensor • Throttle valve • Throttle body	○	○
P2118 (DI−786)	Throttle Actuator Control Motor Current Range/Performance	• Open in throttle control motor and sensor power source circuit • ETCS fuse • ECM	○	○
P2119 (DI−791)	Throttle Actuator Control Throttle Body Range/Performance	• Electric throttle control system • Throttle body	○	○
P2120 (DI−794)	Throttle/Pedal Position Sensor/ Switch ”D” Circuit	• Accelerator pedal position sensor • ECM	○	○
P2121 (DI−803)	Throttle/Pedal Position Sensor/ Switch ”D” Circuit Range/Performance	• Accelerator pedal position sensor	○	○
P2122 (DI−794)	Throttle/Pedal Position Sensor/ Switch ”D” Circuit Low Input	• Accelerator pedal position sensor • VCPA circuit open • VPA circuit open or ground short • ECM	○	○
P2123 (DI−794)	Throttle/Pedal Position Sensor/ Switch ”D” Circuit High Input	• Accelerator pedal position sensor • EPA circuit open • ECM	○	○
P2125 (DI−794)	Throttle/Pedal Position Sensor/ Switch ”E” Circuit	• Accelerator pedal position sensor • ECM	○	○
P2127 (DI−794)	Throttle/Pedal Position Sensor/ Switch ”E” Circuit Low Input	• Accelerator pedal position sensor • VCP2 circuit open • VPA2 circuit open or ground short • ECM	○	○
P2128 (DI−794)	Throttle/Pedal Position Sensor/ Switch ”E” Circuit High Input	• Accelerator pedal position sensor • EPA circuit open • ECM	○	○
P2135 (DI−548)	Throttle Pedal Position Sensor/ Switch ”A” / ”B” Voltage Correlation	• Throttle control motor and sensor • VTA1 and VTA2 circuit are short−circuited • ECM	○	○
P2138 (DI−794)	Throttle Pedal Position Sensor/ Switch ”D” / ”E” Voltage Correlation	• VPA and VPA2 circuit are short circuited • Accelerator pedal position sensor • ECM	○	○
P2195 (DI−806)	Oxygen (A/F) Sensor Signal Stuck Lean (Bank 1 Sensor 1)	• Open or short in A/F sensor (sensor 1) circuit • A/F sensor (sensor 1) • A/F sensor heater (sensor 1) • A/F relay • A/F sensor heater and EFI relay circuits • Air induction system • Fuel pressure • Injector • ECM	○	○
P2196 (DI−806)	Oxygen (A/F) Sensor Signal Stuck Rich (Bank 1 Sensor 1)	• Open or short in A/F sensor (sensor 1) circuit • A/F sensor (sensor 1) • A/F sensor heater (sensor 1) • A/F relay • A/F sensor heater and EFI relay circuits • Air induction system • Fuel pressure • Injector • ECM	○	○

P2197 (DI−806)	Oxygen (A/F) Sensor Signal Stuck Lean (Bank 2 Sensor 1)	• Open or short in A/F sensor (sensor 1) circuit • A/F sensor (sensor 1) • A/F sensor heater (sensor 1) • A/F relay • A/F sensor heater and EFI relay circuits • Air induction system • Fuel pressure • Injector • ECM	○	○
P2198 (DI−806)	Oxygen (A/F) Sensor Signal Stuck Rich (Bank 2 Sensor 1)	• Open or short in A/F sensor (sensor 1) circuit • A/F sensor (sensor 1) • A/F sensor heater (sensor 1) • A/F relay • A/F sensor heater and EFI relay circuits • Air induction system • Fuel pressure • Injector • ECM	○	○
P2238 (DI−826)	Oxygen Sensor Pumping Current Circuit Low (For A/F Sensor) (Bank 1 Sensor 1)	• Open or short in A/F sensor (sensor 1) circuit • A/F sensor (sensor 1) • A/F sensor heater (sensor 1) • A/F relay • A/F sensor heater and EFI relay circuits	○	○
P2239 (DI−826)	Oxygen Sensor Pumping Current Circuit High (For A/F Sensor) (Bank 1 Sensor 1)	• Open or short in A/F sensor (sensor 1) circuit • A/F sensor (sensor 1) • A/F sensor heater (sensor 1) • A/F relay • A/F sensor heater and EFI relay circuits	○	○
P2241 (DI−826)	Oxygen Sensor Pumping Current Circuit Low (For A/F Sensor) (Bank 2 Sensor 1)	• Open or short in A/F sensor (sensor 1) circuit • A/F sensor (sensor 1) • A/F sensor heater (sensor 1) • A/F relay • A/F sensor heater and EFI relay circuits	○	○
P2242 (DI−826)	Oxygen Sensor Pumping Current Circuit High (For A/F Sensor) (Bank 2 Sensor 1)	• Open or short in A/F sensor (sensor 1) circuit • A/F sensor (sensor 1) • A/F sensor heater (sensor 1) • A/F relay • A/F sensor heater and EFI relay circuits	○	○
P2252 (DI−826)	Oxygen Sensor Reference Ground Current Circuit Low (For A/F Sensor) (Bank 1 Sensor 1)	• Open or short in A/F sensor (sensor 1) circuit • A/F sensor (sensor 1) • A/F sensor heater (sensor 1) • A/F relay • A/F sensor heater and EFI relay circuits	○	○
P2253 (DI−826)	Oxygen Sensor Reference Current Circuit High (For A/F Sensor) (Bank 1 Sensor 1)	• Open or short in A/F sensor (sensor 1) circuit • A/F sensor (sensor 1) • A/F sensor heater (sensor 1) • A/F relay • A/F sensor heater and EFI relay circuits	○	○
P2255 (DI−826)	Oxygen Sensor Reference Ground Current Circuit Low (For A/F Sensor) (Bank 2 Sensor 1)	• Open or short in A/F sensor (sensor 1) circuit • A/F sensor (sensor 1) • A/F sensor heater (sensor 1) • A/F relay • A/F sensor heater and EFI relay circuits	○	○
P2256 (DI−826)	Oxygen Sensor Reference Current Circuit High (For A/F Sensor) (Bank 2 Sensor 1)	• Open or short in A/F sensor (sensor 1) circuit • A/F sensor (sensor 1) • A/F sensor heater (sensor 1) • A/F relay • A/F sensor heater and EFI relay circuits	○	○

P2401 (DI−834)	Evaporative Emission System Leak Detection Pump Control Circuit Low	• Pump module • Connector/Wire harness (between pump module and ECM) • ECM	○	○
P2402 (DI−834)	Evaporative Emission System Leak Detection Pump Control Circuit High	• Pump module • Connector/Wire harness (between pump module and ECM) • ECM	○	○
P2419 (DI−840)	Evaporate Emission System Switching Valve Control Circuit Low	• Pump module • Connector/Wire harness (between pump module and ECM) • ECM	○	○
P2420 (DI−840)	Evaporate Emission System Switching Valve Control Circuit High	• Pump module • Connector/Wire harness (between pump module and ECM) • ECM	○	○
P2430 (DI−846)	Secondary Air Injection System Air Flow/Pressure Sensor Circuit Bank 1	• Pressure sensor • Open or short in pressure sensor circuit • Vacuum hose • Check valve • ECM	○	○
P2431 (DI−846)	Secondary Air Injection System Air Flow/Pressure Sensor Circuit Range/Performance Bank 1	• Pressure sensor • Open or short in pressure sensor circuit • Vacuum hose • Check valve • ECM	○	○
P2432 (DI−846)	Secondary Air Injection System Air Flow/Pressure Sensor Circuit Low Bank 1	• Pressure sensor • Open or short in pressure sensor circuit • Vacuum hose • Check valve • ECM	○	○
P2433 (DI−846)	Secondary Air Injection System Air Flow/Pressure Sensor Circuit High Bank 1	• Pressure sensor • Open or short in pressure sensor circuit • Vacuum hose • Check valve • ECM	○	○
P2440 (DI−739)	Secondary Air Injection System Switching Valve Stuck Open Bank 1	• Electromagnetic air switching valve • Air switching valve No.2 (Bank 1 and/or 2) • VSV for air injection system (Bank 1 and/or 2) • Air injection driver • Air injection driver circuit • ECM	○	○
P2441 (DI−754)	Secondary Air Injection System Switching Valve Stuck Close Bank 1	• Vacuum hoses (Throttle body − VSVs for air injection control) • Electromagnetic air switching valve • Air injector pipe (Air switching valve No.2 − exhaust manifold) • Air injection hose • Air switching valve No.2 (Bank 1 and/or 2) • VSV for air injection control (Bank 1 and/or 2) • Air injection driver • Air injection driver circuit • ECM	○	○
P2444 (DI−850)	Secondary Air Injection System Pump Stuck On Bank 1	• Short in air pump circuit • Pressure sensor • Air pump assembly • Open or short in pressure sensor circuit • ECM	○	○

P2445 (DI−850)	Secondary Air Injection System Pump Stuck On Bank 1	• Air pump fuse • Vacuum hose • Air pump assembly • Open in air pump circuit • Air injection system piping • Pressure sensor • Open or short in pressure sensor circuit • ECM	○	○
P2610 (DI−866)	ECM/PCM Internal Engine Off Timer Performance	• ECM	○	○
P2714 (DI−1241)	Pressure Control Solenoid ”D” Performance (Shift Solenoid Valve SLT)	• Electronic control automatic transmission (ECT)	○	○
P2716 (DI−1247)	Pressure Control Solenoid ”D” Electrical (Shift Solenoid Valve SLT)	• Electronic control automatic transmission (ECT)	○	○
P2740 (DI−1251)	Transmission Fluid Temperature Sensor ”B” Circuit	• Electronic control automatic transmission (ECT)	○	○
P2742 (DI−1251)	Transmission Fluid Temperature Sensor ”B” Circuit Low Input	• Electronic control automatic transmission (ECT)	○	○
2743 (DI−1251)	Transmission Fluid Temperature Sensor ”B” Circuit High Input	• Electronic control automatic transmission (ECT)	○	○
P2757 (DI−1257)	Torque Converter clutch Pressure Control Solenoid Performance (Shift Solenoid Valve SLU)	• Electronic control automatic transmission (ECT)	○	○
P2759 (DI−1265)	Torque Converter clutch Pressure Control Solenoid Electrical (Shift Solenoid Valve SLU)	• Electronic control automatic transmission (ECT)	○	○
P2772 (DI−1270)	Transfer L4 SW Circuit	• Electronic control automatic transmission (ECT)	○	○
P2A00 (DI−875)	A/F Sensor Circuit Slow Response (Bank 1 Sensor 1)	• Open or short in A/F sensor (sensor 1) circuit • A/F sensor (sensor 1) • ECM	○	○
P2A03 (DI−875)	A/F Sensor Circuit Slow Response (Bank 2 Sensor 1)	• Open or short in A/F sensor (sensor 1) circuit • A/F sensor (sensor 1) • ECM	○	○

*1: − .... MIL does not light up, ○ .... MIL lights up

*2: MIL lights up or blinks.

DIDR5−01

FAIL−SAFE CHART

If any of the following code is recorded, the ECM enters fail−safe mode.

DTC No.	Fail−Safe Operation	Fail−Safe Deactivation Conditions
P0031 P0032 P0037 P0038 P0051 P0052 P0057 P0058	The heater circuit in which an abnormality is detected is turned off	Ignition switch OFF
P0100 P0102 P0103	Ignition timing is calculated from engine speed and throttle angle	”Pass” condition detected
P0110 P0112 P0113	Intake air temperature is fixed at 20°C (68°F)	”Pass” condition detected
P0115 P0117 P0118	Engine coolant temperature is fixed at 80°C (176°F)	”Pass” condition detected
P0120 P0121 P0122 P0123 P0220 P0222 P0223 P0606 P0607 P0657 P2102 P2103 P2111 P2112 P2118 P2119 P2135	If the Electronic Throttle Control System (ETCS) has a malfunction, the ECM cuts off current to the throttle control motor. The throttle control valve returns to a predetermined opening angle (approximately 16°) by the force of the return spring. The ECM then adjusts the engine output by controlling the fuel injection (intermittent fuel−cut) and ignition timing in accordance with the accelerator pedal opening angle to enable the vehicle to continue at a minimal speed. If the accelerator pedal is depressed firmly and slowly, the vehicle can be driven slowly. If the accelerator pedal is depressed quickly, the vehicle may speed up and slow down erratically.	”Pass” condition is detected and then the ignition switch is turned OFF.
P0351 P0352 P0353 P0354 P0355 P0356 P0357 P0358	Fuel cut	”Pass” condition detected
P2120 P2121 P2122 P2123 P2125 P2127 P2128 P2138	The accelerator pedal position sensor has two (main and sub) sensor circuits. If a malfunction occurs in either of the sensor circuits, the ECM detects the abnormal signal voltage difference between the two sensor circuits and switches to limp mode. In limp mode, the remaining circuit is used to calculate the accelerator pedal opening to allow the vehicle to continue driving. If both circuits malfunction, the ECM regards the opening angle of the accelerator pedal to be fully closed. In this case, the throttle valve will remain closed as if the engine is idling.	”Pass” condition is detected and the ignition switch is turned OFF.

P2440 and P1441 and/or P1444	Restrict the throttle opening angle: Ga ≦ 30 g/s	
P1441 and P1444	Restrict the throttle opening angle: Ga ≦ 50 g/s	
P1441 P1444	Restrict the throttle opening angle: Ga ≦ 100 g/s	
P2430 P2431 P2432 P2433	Restrict the throttle opening angle: Ga ≦ 50 g/s	

DI078−25

HOW TO PROCEED WITH TROUBLESHOOTING

Troubleshoot in accordance with the procedure on the following page.

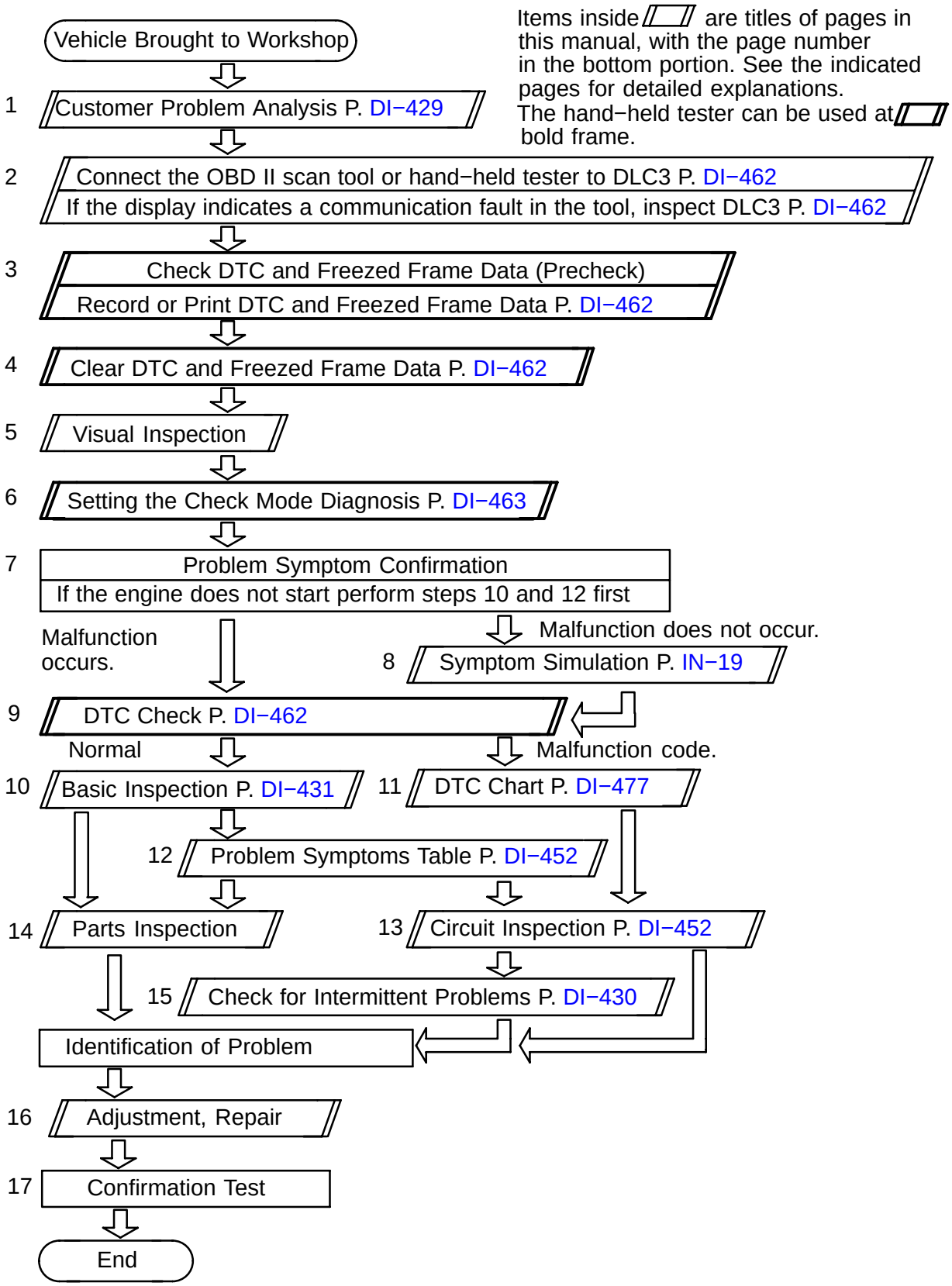

DIDQT−01

LOCATION

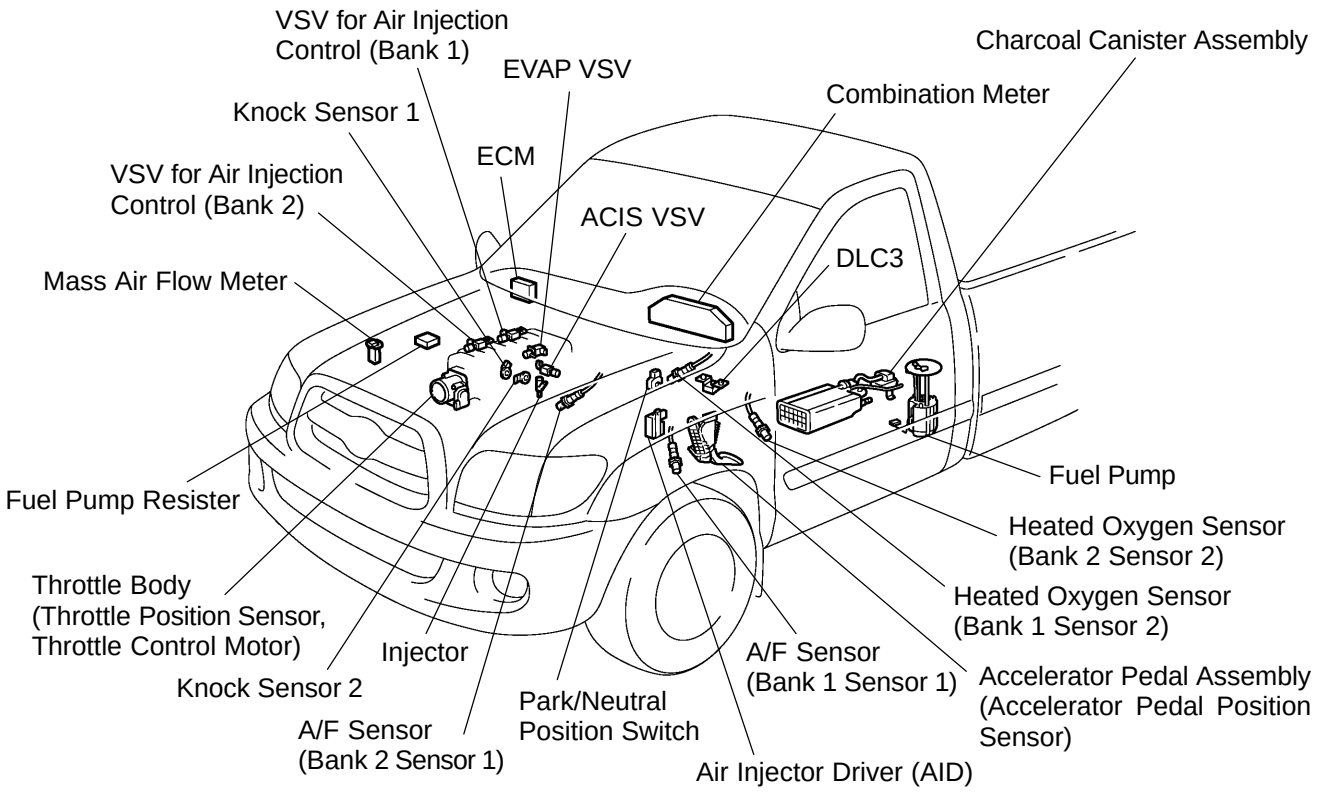

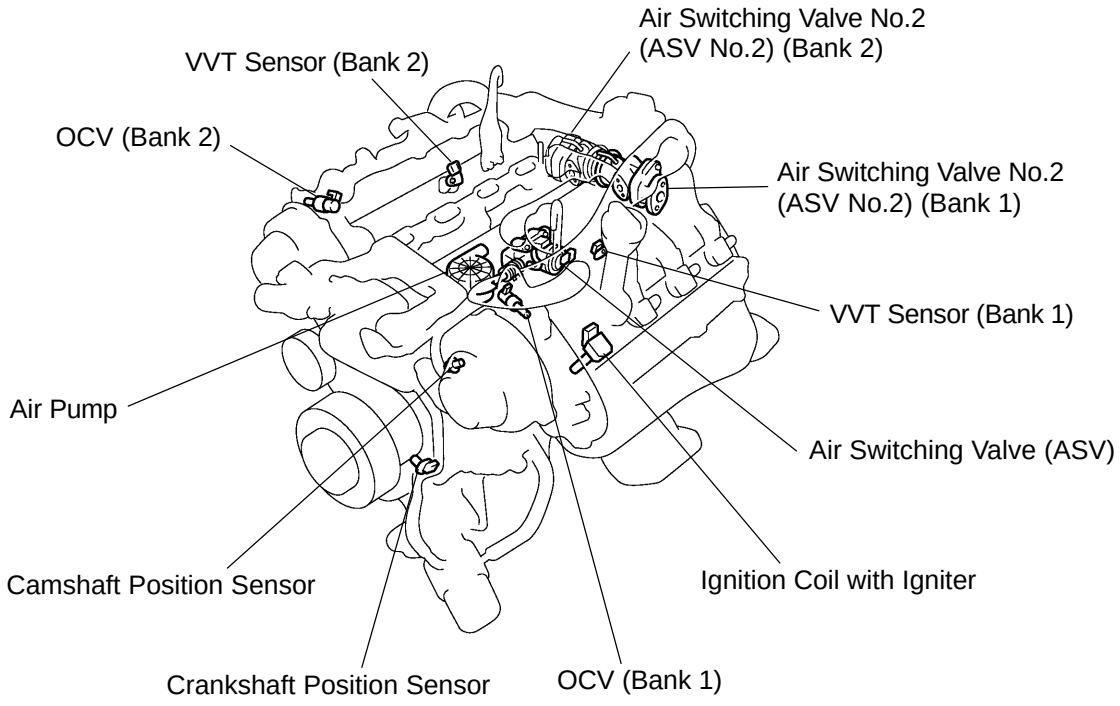

N

cmc0652

DIDQY−01

LIST OF DISABLE A MONITOR

HINT:

This table indicates ECM monitoring status for the items in the upper columns if the DTCs in each line on the left are being set.

As for the ”X” mark, when the DTC on the left is stored, detection of the DTC in the upper column is not performed.

Monitor detected malfunction

Fault code	Fault code	Component/ system	Monitor disablement (X - disabled)																										
			P0010,P0020	P0011	P0012	P0016,P0018	P0021	P0022	P0030,50	P0135,P0155	P0036,56	P0043,44,63,64	P0100	P0101	P0105	P0106	P0110	P0115	P0116	P0120,P0121	P0125	P0128	P0130-P0153	P0134,P0154	P0136,P0156	P0142,P0162	P0171,P0172	P0300-P0308
			P0010,P0020	P0011	P0012	P0016,P0018	P0021	P0022	P0031,32,51,52	P0031,32,51,52	P0037,38,57,58	P0043,44,63,64	P0100-P0103	P0101	P0105-P0108	P0106	P0110-P0113	P0115-P0118	P0116	P0120-P0223,P2135	P0125	P0128	P0130-P0153	P0134,P0154	P0136,P0156	P0142,P0162	P0171,P0172	P0300-P0308
			VVT VSV1,2	VVT System1 -Advance	VVT System1 - Retard	VVT System - Misalignment	VVT System2 - Advance	VVT System2 - Retard	O2 Sensor Heater - Sensor1	A/F Sensor Heater - Sensor1	O2 Sensor Heater - Sensor2	O2 Sensor Heater - Sensor3	MAF sensor	MAF sensor	MAP sensor	MAP sensor	IAT sensor	ECT sensor	ECT sensor	TP sensor	Insufficient ECT for Closed Loop	Thermostat	O2 Sensor -Sensor1	O2 Sensor, A/F Sensor(No Activity) - Sensor1	O2 Sensor - Sensor2	O2 Sensor - Sensor3	Fuel system	Misfire
P0010,P0020	P0010,P0020	VVT VSV1,2																				X							
P0011	P0011	VVT System1 - Advance				X		X														X							
P0012	P0012	VVT System1 - Retard				X		X														X							
P0016,P0018	P0016,P0018	VVT System - Misalignment																											
P0021	P0021	VVT System2 - Advance			X	X																X							
P0022	P0022	VVT System2 - Retard			X																	X							
P0030,50	P0031,32,51,52	O2 Sensor Heater - Sensor1																				X	X	X	X	X	X		
P0135,P0155	P0031,32,51,52	A/F Sensor Heater - Sensor1																				X			X	X	X		
P0036,56	P0037,38,57,58	O2 Sensor Heater - Sensor2																							X	X			
P0043,44,63,64	P0043,44,63,64	O2 Sensor Heater - Sensor3																								X			
P0100,P0101	P0100-P0103	MAF sensor		X	X		X	X											X		X	X	X	X	X	X	X	X	X
P0105,P0106	P0105-P0108	MAP sensor		X	X		X	X											X		X	X	X	X	X	X	X	X	X
P0110	P0110-P0113	IAT sensor																			X	X	X	X	X	X			X
P0115,P0116	P0115-P0118	ECT sensor		X	X	X	X	X						X		X					X	X	X	X	X	X	X	X	X
P0120,P0121	P0120-P0223,P2135	TP sensor												X		X							X	X	X	X	X	X	X
P0125	P0125	Insufficient ECT for Closed Loop		X	X		X	X						X		X						X	X	X	X	X	X	X	X
P0128	P0128	Thermostat																					X						
P0130-P0153	P0130-P0153	O2 Sensor - Sensor1																				X		X	X	X			
P0134,P0154	P0134,P0154	O2 Sensor, A/F Sensor(No Activity) - Sensor1								X												X	X		X	X	X		
P0136,P0156	P0136,P0156	O2 Sensor - Sensor2																											
P0142,P0162	P0142,P0162	O2 Sensor - Sensor3																											
P0171,P0172	P0171,P0172	Fuel system																				X	X	X	X	X			
P0300-P0308	P0300-P0308	Misfire							X													X	X	X	X	X			
P0325,P0330	P0325-P0333	Knock sensor																											X
P0335	P0335	CKP sensor		X	X		X	X						X		X						X	X	X	X	X	X	X	X
P0340, P0341	P0340, P0341	CMP sensor		X	X		X	X						X		X						X	X	X	X	X	X	X	X
P0340-P0346	P0340-P0346	VVT sensor1,2																				X							
P0351-P0358	P0351-P0358	Ignitor		X	X		X	X														X							
P0385	P0385	CKP sensor 2												X		X						X	X	X	X	X	X	X	X
P0401	P0401	EGR system (closed)																				X					X		
P0402	P0402	EGR system (open)																				X	X	X	X	X	X		
P0405,P0409	P0405-P0409	Lift sensor																									X		
P0420,P0430	P0420,P0430	Catalyst																											
P0442-P0456	P0442-P0456	EVAP system																					X	X	X	X			
P0450,P0451	P0450-P0453	EVAP press sensor																											

C

A21570

Monitor detected malfunction

Fault code	Fault code	Component/ system	Monitor disablement (X - disabled)																										
			P0010,P0020	P0011	P0012	P0016,P0018	P0021	P0022	P0030,50	P0135,P0155	P0036,56	P0043,44,63,64	P0100	P0101	P0105	P0106	P0110	P0115	P0116	P0120,P0121	P0125	P0128	P0130-P0153	P0134,P0154	P0136,P0156	P0142,P0162	P0171,P0172	P0300-P0308
			P0010,P0020	P0011	P0012	P0016,P0018	P0021	P0022	P0031,32,51,52	P0031,32,51,52	P0037,38,57,58	P0043,44,63,64	P0100-P0103	P0101	P0105-P0108	P0106	P0110-P0113	P0115-P0118	P0116	P0120-P0223,P2135	P0125	P0128	P0130-P0153	P0134,P0154	P0136,P0156	P0142,P0162	P0171,P0172	P0300-P0308
			VVT VSV1,2	VVT System1 -Advance	VVT System1 - Retard	VVT System - Misalignment	VVT System2 - Advance	VVT System2 - Retard	O2 Sensor Heater - Sensor1	A/F Sensor Heater - Sensor1	O2 Sensor Heater - Sensor2	O2 Sensor Heater - Sensor3	MAF sensor	MAF sensor	MAP sensor	MAP sensor	IAT sensor	ECT sensor	ECT sensor	TP sensor	Insufficient ECT for Closed Loop	Thermostat	O2 Sensor -Sensor1	O2 Sensor, A/F Sensor(No Activity) - Sensor1	O2 Sensor - Sensor2	O2 Sensor - Sensor3	Fuel system	Misfire
P0500	P0500	VSS																				X	X	X	X	X	X	X
P0511	P0511	IAC valve																					X					
P0510	P0510	Idle switch												X		X						X	X		X	X	X	X
P0560	P0560	System Voltage																										
P0617	P0617	Starter signal																										
P0705	P0705	Shift lever position switch																										
P0710	P0710-P0713	Trans fluid temp sensor																										
P0720-P0793	P0720-P0793	Output speed sensor																										
P0715-P0717	P0715-P0717	Input speed sensor																										
P0724	P0724	Stop lamp switch																										
P0741-P0796	P0741-P0796	Trans solenoid (function)																										
P0748-P0798	P0748-P0799	Trans solenoid (range)																										
P0850	P0850	PNP switch																										X
P1010,P1020	P1010,P1020	VVTL																				X					X	
P1011,12(,21,22)	P1011,12(,21,22)	VVTL system1(,2)																				X					X	
P1126	P1126	Electronic magnet clutch																										
P1129	P1129	Electronic throttle system																										
P1430	P1430	HC adsorber ACT press sensor																										
P2004,6	P2004,6	Intake Manifold Runner Control																										
P2009,10	P2009,10	Intake Manifold Runner Control Circuit																										
P2014,16,17	P2014,16,17	Intake Manifold Runner Position Sensor																										
P2102,P2103	P2102,P2103	Throttle motor																										
P2120-P2138	P2120-P2138	Accel position sensor																										
P2196,P2198	P2196,P2198	A/F sensor (rationality)																				X			X	X		
P2226	P2226	BARO sensor																					X		X	X		
P2237,P2240	P2237,P2240	A/F sensor (open)																				X			X	X		
P2423,24	P2423,24	HC Adsorption Catalyst																										
P2430,2,3	P2430,2,3	AIR Pressure Sensor(Low/High)																										
P2431	P2431	AIR Pressure Sensor(Rationality)																										
P2440	P2440	AIR control valve stuck open																					X	X	X	X	X	
P2441	P2441	AIR control valve stuck close																					X	X	X	X	X	
P2444	P2444	AIP stuck On																					X	X	X	X	X	
P2445	P2445	AIP stuck Off																					X	X	X	X	X	
P2714-P2759	P2714-P2759	Trans solenoid(SLU-SLD)																										
P2A00,P2A03	P2A00,P2A03	A/F sensor (slow response)																				X			X	X		

C

A21571

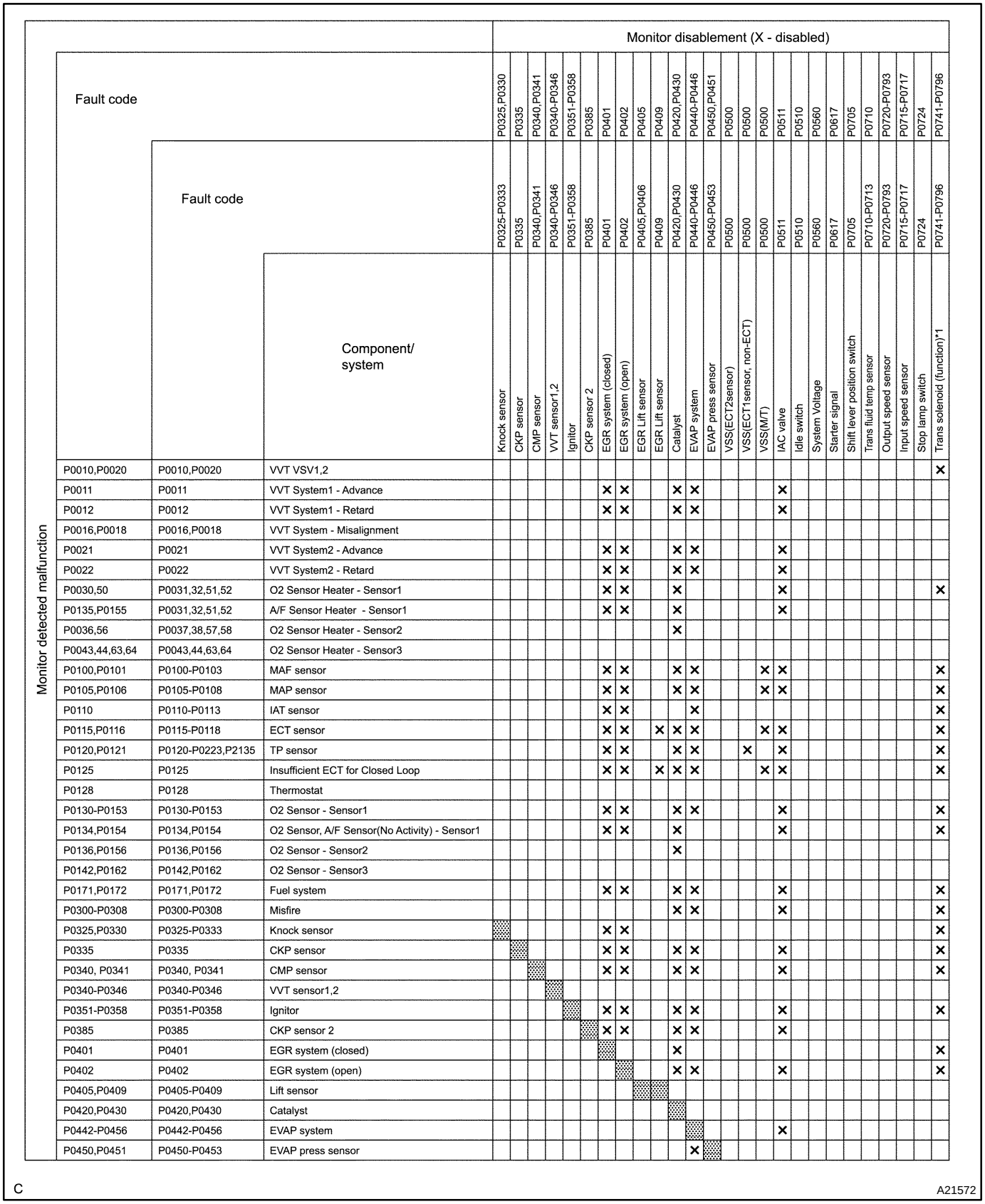

Monitor detected malfunction	Fault code	Fault code	Component/ system	Monitor disablement (X - disabled)																														
				P0325,P0330	P0335	P0340,P0341	P0340-P0346	P0351-P0358	P0385	P0401	P0402	P0405	P0409	P0420,P0430	P0440-P0446	P0450,P0451	P0500	P0500	P0500	P0511	P0510	P0560	P0617	P0705	P0710	P0720-P0793	P0715-P0717	P0724	P0741-P0796
		P0325-P0333	Knock sensor																															
		P0335	CKP sensor																															
		P0340,P0341	CMP sensor																															
		P0340-P0346	VVT sensor1,2																															
		P0351-P0358	Ignitor																															
		P0385	CKP sensor 2																															
		P0401	EGR system (closed)																															
		P0402	EGR system (open)																															
		P0405,P0406	EGR Lift sensor																															
		P0409	EGR Lift sensor																															
		P0420,P0430	Catalyst																															
		P0440-P0446	EVAP system																															
		P0450,P0451	EVAP press sensor																															
		P0500	VSS(ECT2sensor)																															
		P0500	VSS(ECT1sensor, non-ECT)																															
		P0500	VSS(M/T)																															
		P0511	IAC valve																															
		P0510	Idle switch																															
		P0560	System Voltage																															
		P0617	Starter signal																															
		P0705	Shift lever position switch																															
		P0710-P0713	Trans fluid temp sensor																															
		P0720-P0793	Output speed sensor																															
		P0715-P0717	Input speed sensor																															
		P0724	Stop lamp switch																															
		P0741-P0796	Trans solenoid (function)*1																															
	P0010,P0020	P0010,P0020	VVT VSV1,2																															X
	P0011	P0011	VVT System1 - Advance							X	X			X	X					X													
	P0012	P0012	VVT System1 - Retard							X	X			X	X					X													
	P0016,P0018	P0016,P0018	VVT System - Misalignment																															
	P0021	P0021	VVT System2 - Advance							X	X			X	X					X													
	P0022	P0022	VVT System2 - Retard							X	X			X	X					X													
	P0030,50	P0031,32,51,52	O2 Sensor Heater - Sensor1							X	X			X						X													X
	P0135,P0155	P0031,32,51,52	A/F Sensor Heater - Sensor1							X	X			X						X													
	P0036,56	P0037,38,57,58	O2 Sensor Heater - Sensor2											X																			
	P0043,44,63,64	P0043,44,63,64	O2 Sensor Heater - Sensor3																															
	P0100,P0101	P0100-P0103	MAF sensor							X	X			X	X				X	X													X
	P0105,P0106	P0105-P0108	MAP sensor							X	X			X	X				X	X													X
	P0110	P0110-P0113	IAT sensor							X	X				X																		X
	P0115,P0116	P0115-P0118	ECT sensor							X	X		X	X	X				X	X													X
	P0120,P0121	P0120-P0223,P2135	TP sensor							X	X			X	X			X		X													X
	P0125	P0125	Insufficient ECT for Closed Loop							X	X		X	X	X				X	X													X
	P0128	P0128	Thermostat																															
	P0130-P0153	P0130-P0153	O2 Sensor - Sensor1							X	X			X	X					X													X
	P0134,P0154	P0134,P0154	O2 Sensor, A/F Sensor(No Activity) - Sensor1							X	X			X						X													X
	P0136,P0156	P0136,P0156	O2 Sensor - Sensor2											X																			
	P0142,P0162	P0142,P0162	O2 Sensor - Sensor3																															
	P0171,P0172	P0171,P0172	Fuel system							X	X			X	X					X													X
	P0300-P0308	P0300-P0308	Misfire											X	X					X													X
	P0325,P0330	P0325-P0333	Knock sensor							X	X																							X
	P0335	P0335	CKP sensor							X	X			X	X					X													X
	P0340, P0341	P0340, P0341	CMP sensor							X	X			X	X					X													X
	P0340-P0346	P0340-P0346	VVT sensor1,2																															
	P0351-P0358	P0351-P0358	Ignitor							X	X			X	X					X													X
	P0385	P0385	CKP sensor 2							X	X			X	X					X													
	P0401	P0401	EGR system (closed)											X																			X
	P0402	P0402	EGR system (open)											X	X					X													X
	P0405,P0409	P0405-P0409	Lift sensor																															
	P0420,P0430	P0420,P0430	Catalyst																															
	P0442-P0456	P0442-P0456	EVAP system																	X													
	P0450,P0451	P0450-P0453	EVAP press sensor												X																		

C

A21572

Monitor detected malfunction

Fault code	Fault code	Component/ system	Monitor disablement (X - disabled)																														
			P0325,P0330	P0335	P0340,P0341	P0340-P0346	P0351-P0358	P0385	P0401	P0402	P0405	P0409	P0420,P0430	P0440-P0446	P0450,P0451	P0500	P0500	P0500	P0511	P0510	P0560	P0617	P0705	P0710	P0720-P0793	P0715-P0717	P0724	P0741-P0796						
			P0325-P0333	P0335	P0340,P0341	P0340-P0346	P0351-P0358	P0385	P0401	P0402	P0405,P0406	P0409	P0420,P0430	P0440-P0446	P0450-P0453	P0500	P0500	P0500	P0511	P0510	P0560	P0617	P0705	P0710-P0713	P0720-P0793	P0715-P0717	P0724	P0741-P0796						
			Knock sensor	CKP sensor	CMP sensor	VVT sensor1,2	Ignitor	CKP sensor 2	EGR system (closed)	EGR system (open)	EGR Lift sensor	EGR Lift sensor	Catalyst	EVAP system	EVAP press sensor	VSS(ECT2sensor)	VSS(ECT1sensor, non-ECT)	VSS(M/T)	IAC valve	Idle switch	System Voltage	Starter signal	Shift lever position switch	Trans fluid temp sensor	Output speed sensor	Input speed sensor	Stop lamp switch	Trans solenoid (function)*1						
P0500	P0500	VSS							X	X			X	X					X						X	X		X					
P0511	P0511	IAC valve																															
P0510	P0510	Idle switch								X			X	X					X									X					
P0560	P0560	System Voltage																															
P0617	P0617	Starter signal																															
P0705	P0705	Shift lever position switch																															
P0710	P0710-P0713	Trans fluid temp sensor																															
P0720-P0793	P0720-P0793	Output speed sensor																															X
P0715-P0717	P0715-P0717	Input speed sensor																															
P0724	P0724	Stop lamp switch																															
P0741-P0796	P0741-P0796	Trans solenoid (function)																															
P0748-P0798	P0748-P0799	Trans solenoid (range)																							X	X		X					
P0850	P0850	PNP switch																	X									X					
P1010,P1020	P1010,P1020	VVTL																															
P1011,12(,21,22)	P1011,12(,21,22)	VVTL system1(,2)							X	X			X	X					X														
P1126	P1126	Electronic magnet clutch																															
P1129	P1129	Electronic throttle system																															
P1430	P1430	HC adsorber ACT press sensor												X	X																		
P2004,6	P2004,6	Intake Manifold Runner Control																															
P2009,10	P2009,10	Intake Manifold Runner Control Circuit																															
P2014,16,17	P2014,16,17	Intake Manifold Runner Position Sensor																															
P2102,P2103	P2102,P2103	Throttle motor																															
P2120-P2138	P2120-P2138	Accel position sensor																															
P2196,P2198	P2196,P2198	A/F sensor (rationality)							X	X			X						X									X					
P2226	P2226	BARO sensor																										X					
P2237,P2240	P2237,P2240	A/F sensor (open)							X	X			X						X									X					
P2423,24	P2423,24	HC Adsorption Catalyst																															
P2430,2,3	P2430,2,3	AIR Pressure Sensor(Low/High)																															
P2431	P2431	AIR Pressure Sensor(Rationality)																															
P2440	P2440	AIR control valve stuck open							X	X			X																				
P2441	P2441	AIR control valve stuck close							X	X			X																				
P2444	P2444	AIP stuck On							X	X			X																				
P2445	P2445	AIP stuck Off							X	X			X																				
P2714-P2759	P2714-P2759	Trans solenoid(SLU-SLD)																										X					
P2A00,P2A03	P2A00,P2A03	A/F sensor (slow response)							X	X			X						X									X					

C

A21573

Monitor detected malfunction

Fault code	Fault code	Component/ system	Monitor disablement (X - disabled)																												
			P0741-P0796	P0748-P0798	P0850	P1010,P1020	P1011,12(,21,22)	P1126	P1129	P1430	P2004,P2006	P2009,P2010	P2014,16,17	P2102,P2103	P2120-P2138	P2196,P2198	P2226	P2237,P2240	P2423,24	P2430,2,3	P2431	P2440	P2441	P2444	P2445	P2714-P2759	P2A00,P2A03
			P0741-P0796	P0748-P0999	P0850	P1010,P1020	P1011,12(,21,22)	P1126	P1129	P1430	P2004,6	P2009,10	P2014,16,17	P2102,P2103	P2120-P2138	P2196,P2198	P2226	P2237,P2240	P2423,24	P2430,2,3	P2431	P2440	P2441	P2444	P2445	P2714-P2759	P2A00,P2A03
			Trans solenoid (function)*2	Trans solenoid (range)	PNP switch	VVTL	VVTL system1(,2)	Electronic magnet clutch	Electronic throttle system	HC adsorber ACT press sensor	Intake Manifold Runner Control	Intake Manifold Runner Control Circuit	Intake Manifold Runner Position Sensor	Throttle motor	Accel position sensor	A/F Sensor(Rationality) - Sensor1	BARO sensor	A/F Sensor(Open) - Sensor1	HC Adsorption Catalyst	AIR Pressure Sensor(Low/High)	AIR Pressure Sensor(Rationality)	AIR control valve stuck open	AIR control valve stuck close	AIP stuck On	AIP stuck Off	Trans solenoid(SLU-SLD)	A/F Sensor (Slow response) - Sensor1
P0010,P0020	P0010,P0020	VVT VSV1,2																				X	X	X	X		
P0011	P0011	VVT System1 - Advance																				X	X	X	X		
P0012	P0012	VVT System1 - Retard																				X	X	X	X		
P0016,P0018	P0016,P0018	VVT System - Misalignment																				X	X	X	X		
P0021	P0021	VVT System2 - Advance																				X	X	X	X		
P0022	P0022	VVT System2 - Retard																				X	X	X	X		
P0030,50	P0031,32,51,52	O2 Sensor Heater - Sensor1																	X			X	X	X	X		
P0135,P0155	P0031,32,51,52	A/F Sensor Heater - Sensor1														X		X	X			X	X	X	X		X
P0036,56	P0037,38,57,58	O2 Sensor Heater - Sensor2														X			X								
P0043,44,63,64	P0043,44,63,64	O2 Sensor Heater - Sensor3																	X								
P0100,P0101	P0100-P0103	MAF sensor				X	X									X		X	X			X	X	X	X		X
P0105,P0106	P0105-P0108	MAP sensor				X	X									X		X	X			X	X	X	X		X
P0110	P0110-P0113	IAT sensor									X					X		X				X	X	X	X		X
P0115,P0116	P0115-P0118	ECT sensor	X			X	X				X					X		X	X			X	X	X	X		X
P0120,P0121	P0120-P0223,P2135	TP sensor														X		X	X			X	X	X	X		X
P0125	P0125	Insufficient ECT for Closed Loop	X			X										X		X	X			X	X	X	X		X
P0128	P0128	Thermostat																									
P0130-P0153	P0130-P0153	O2 Sensor - Sensor1																	X			X	X	X	X		
P0134,P0154	P0134,P0154	O2 Sensor, A/F Sensor(No Activity) - Sensor1														X		X	X			X	X	X	X		X
P0136,P0156	P0136,P0156	O2 Sensor - Sensor2														X			X								
P0142,P0162	P0142,P0162	O2 Sensor - Sensor3																	X								
P0171,P0172	P0171,P0172	Fuel system														X		X	X			X	X	X	X		X
P0300-P0308	P0300-P0308	Misfire														X		X	X			X	X	X	X		X
P0325,P0330	P0325-P0333	Knock sensor																				X	X	X	X		
P0335	P0335	CKP sensor				X	X									X		X	X			X	X	X	X		X
P0340, P0341	P0340, P0341	CMP sensor				X	X									X		X	X			X	X	X	X		X
P0340-P0346	P0340-P0346	VVT sensor1,2																				X	X	X	X		
P0351-P0358	P0351-P0358	Ignitor																	X			X	X	X	X		
P0385	P0385	CKP sensor 2				X	X									X		X	X			X	X	X	X		X
P0401	P0401	EGR system (closed)																	X								
P0402	P0402	EGR system (open)														X		X	X			X	X	X	X		X
P0405,P0409	P0405-P0409	Lift sensor																									
P0420,P0430	P0420,P0430	Catalyst																									
P0442-P0456	P0442-P0456	EVAP system														X		X				X	X	X	X		X
P0450,P0451	P0450-P0453	EVAP press sensor																				X	X	X	X		

C

A21575

Monitor detected malfunction

Fault code	Fault code	Component/ system	Monitor disablement (X - disabled)																												
			P0741-P0796	P0748-P0798	P0850	P1010,P1020	P1011,12(,21,22)	P1126	P1129	P1430	P2004,P2006	P2009,P2010	P2014,16,17	P2102,P2103	P2120-P2138	P2196,P2198	P2226	P2237,P2240	P2423,24	P2430,2,3	P2431	P2440	P2441	P2444	P2445	P2714-P2759	P2A00,P2A03
			P0741-P0796	P0748-P0999	P0850	P1010,P1020	P1011,12(,21,22)	P1126	P1129	P1430	P2004,6	P2009,10	P2014,16,17	P2102,P2103	P2120-P2138	P2196,P2198	P2226	P2237,P2240	P2423,24	P2430,2,3	P2431	P2440	P2441	P2444	P2445	P2714-P2759	P2A00,P2A03
			Trans solenoid (function)*2	Trans solenoid (range)	PNP switch	VVTL	VVTL system1(,2)	Electronic magnet clutch	Electronic throttle system	HC adsorber ACT press sensor	Intake Manifold Runner Control	Intake Manifold Runner Control Circuit	Intake Manifold Runner Position Sensor	Throttle motor	Accel position sensor	A/F Sensor(Rationality) - Sensor1	BARO sensor	A/F Sensor(Open) - Sensor1	HC Adsorption Catalyst	AIR Pressure Sensor(Low/High)	AIR Pressure Sensor(Rationality)	AIR control valve stuck open	AIR control valve stuck close	AIP stuck On	AIP stuck Off	Trans solenoid(SLU-SLD)	A/F Sensor (Slow response) - Sensor1
P0500	P0500	VSS	X													X		X	X			X	X	X	X		X
P0511	P0511	IAC valve														X		X									X
P0510	P0510	Idle switch														X		X	X								X
P0560	P0560	System Voltage																									
P0617	P0617	Starter signal																									
P0705	P0705	Shift lever position switch																									
P0710	P0710-P0713	Trans fluid temp sensor																									
P0720-P0793	P0720-P0793	Output speed sensor																									
P0715-P0717	P0715-P0717	Input speed sensor																									
P0724	P0724	Stop lamp switch																									
P0741-P0796	P0741-P0796	Trans solenoid (function)	▨																								
P0748-P0798	P0748-P0799	Trans solenoid (range)	X	▨																							
P0850	P0850	PNP switch			▨																						
P1010,P1020	P1010,P1020	VVTL				▨																X	X	X	X		
P1011,12(,21,22)	P1011,12(,21,22)	VVTL system1(,2)					▨															X	X	X	X		X
P1126	P1126	Electronic magnet clutch						▨																			
P1129	P1129	Electronic throttle system							▨																		
P1430	P1430	HC adsorber ACT press sensor								▨																	
P2004,6	P2004,6	Intake Manifold Runner Control									▨																
P2009,10	P2009,10	Intake Manifold Runner Control Circuit										▨															
P2014,16,17	P2014,16,17	Intake Manifold Runner Position Sensor											▨														
P2102,P2103	P2102,P2103	Throttle motor												▨													
P2120-P2138	P2120-P2138	Accel position sensor													▨												
P2196,P2198	P2196,P2198	A/F sensor (rationality)														▨			X			X	X	X	X		X
P2226	P2226	BARO sensor														X	▨	X				X	X	X	X		X
P2237,P2240	P2237,P2240	A/F sensor (open)																▨	X			X	X	X	X		X
P2423,24	P2423,24	HC Adsorption Catalyst																	▨								
P2430,2,3	P2430,2,3	AIR Pressure Sensor(Low/High)																		▨	X	X	X	X	X		
P2431	P2431	AIR Pressure Sensor(Rationality)																			▨	X	X	X	X		
P2440	P2440	AIR control valve stuck open														X		X	X			▨					X
P2441	P2441	AIR control valve stuck close														X		X	X				▨				X
P2444	P2444	AIP stuck On														X		X	X					▨			X
P2445	P2445	AIP stuck Off														X		X	X						▨		X
P2714-P2759	P2714-P2759	Trans solenoid(SLU-SLD)																								▨	
P2A00,P2A03	P2A00,P2A03	A/F sensor (slow response)																	X			X	X	X	X		▨

C

A21576

DIDQZ−01

O2S TEST RESULT

INTRODUCTION

The O2S TEST RESULT refers to the results of the engine control module (ECM) when it monitors the oxygen sensor (O2S), and it can be read using the hand−held tester or the generic OBD II scan tool. Based on this, you can find the O2S's conditions.

The ECM monitors the O2S in the various items. You can read the monitor result (TEST DATA) of each monitor item using the O2S TEST RESULT. However, the output value of the TEST DATA is the latest "snapshot" value that is taken after monitoring and therefore it is not dynamic.

In this repair manual, the description of the O2S TEST RESULT (for O2S related DTCs) are written in a table.

This table consists of 5 items:

(1) TEST ID (a code applied to each TEST DATA)
(2) Description of TEST DATA
(3) Conversion Factor (When Conversion Factor has a value written in the table, multiply the TEST DATA value appearing on the scan tool by the Conversion Factor value. The result will be the required value.)
(4) Unit
(5) Standard Value

If the TEST DATA value appearing on the scan tool is out of the standard value, the O2S is malfunctioning. If it is within the standard value, the O2S is functioning normally. However, if the value is on the borderline of the standard value, the O2S may malfunction very soon.

HOW TO READ O2S TEST RESULT USING HAND−HELD TESTER

(a) Connect the hand−held tester to the DLC3.

O2S TEST RESULT Screen

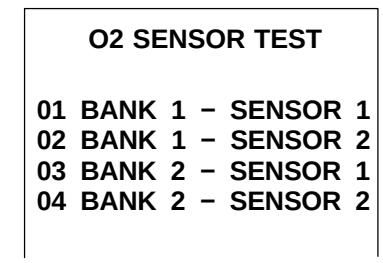

(b) On the tester screen, select the following menus: DIAGNOSIS / CARB OBDII / O2S TEST RESULT. A list of the O2S equipped on the vehicle will be displayed.

TEST DATA Screen

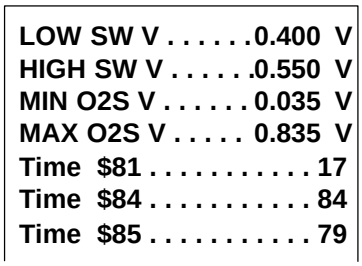

(c) Select the desired O2S and press ENTER. The following screen will appear.

(d) Press HELP and ⁎ simultaneously. More information will appear.

(e) Example:

(1) The hand−held tester displays ”17” as a value of the ”TIME $81” (see the illustration on the left).

(2) Find the Conversion Factor value of ”TIME $81” in the O2S TEST RESULT chart below. 0.3906 is specified for $81 in this chart.

(3) Multiply ”17” in step (1) by 0.3906 (Conversion Factor) in the step (2).
17 x 0.3906 = 6.6 %

(4) If the answer is within the standard value, the ”TIME $81” can be confirmed to be normal.

O2S TEST RESULT Chart

TEST ID	Description of TEST DATA	Conversion Factor	Unit	Standard Value
$81	Percentage of monitoring time when the HO2S voltage is less than 0.05V	Multiply 0.3906	%	Within 60 %

ENGINE (2UZ−FE)

DIDQQ−01

PRECAUTION

NOTICE:

Perform the RESET MEMORY (AT initialization) when replacing the automatic transmission assembly, engine assembly or ECM (See page DI−1126).

HINT:

Initialization can not be completed by only removing the battery.

DI1L9−17

PROBLEM SYMPTOMS TABLE

Symptom	Suspect Area	See page
Engine does not crank (Does not start)	1. Starter 2. Starter relay 3. Park/neutral position switch	ST−1 ST−20 DI−1159
No initial combustion (Does not start)	1. ECM power source circuit 2. Fuel pump control circuit 3. ECM	DI−918 DI−937 IN−30
No complete combustion (Does not start)	Fuel pump control circuit	DI−937
Engine cranks normally but difficult to start	1. Starter signal circuit 2. Fuel pump control circuit 3. Compression	DI−723 DI−937 EM−3
Difficult to start with cold engine	1. Starter signal circuit 2. Fuel pump control circuit	DI−723 DI−937
Difficult to start with hot engine	1. Starter signal circuit 2. Fuel pump control circuit	DI−723 DI−937
High engine idle speed (Poor idling)	1. A/C switch circuit 2. ECM power source circuit	− DI−918
Low engine idle speed (Poor idling)	1. A/C switch circuit 2. Fuel pump control circuit	− DI−937
Rough idling (Poor idling)	1. Compression 2. Fuel pump control circuit	EM−3 DI−937
Hunting (Poor idling)	1. ECM power source circuit 2. Fuel pump control circuit	DI−918 DI−937
Hesitation/Poor acceleration (Poor driveability)	1. Fuel pump control circuit 2. A/T faulty	DI−937 −
Surging (Poor driveability)	Fuel pump control circuit	DI−937
Engine stalls soon after starting	Fuel pump control circuit	DI−937
Engine stalls during A/C operation	1. A/C switch circuit 2. ECM	− IN−30

DIDQX−01

REGISTRATION

NOTICE:

The Vehicle Identification Number (VIN) must be input into the replacement ECM.

HINT:

The VIN is in the form of a 17−digit alphanumeric vehicle identification number. A hand−held tester is required to register the VIN.

1. DESCRIPTION

This registration section consists of three parts, Input Instructions, Read VIN and Write VIN.

(a) Input Instructions: Explains the general VIN input instructions using a hand−held tester.

(b) Read VIN: Explains the VIN reading process in a flowchart. This process allows the VIN stored in the ECM to be read, in order to confirm that the two VINs, provided with the vehicle and stored in the vehicle's ECM, are the same.

(c) Write VIN: Explains the VIN writing process in a flowchart. This process allows the VIN to be input into the ECM. If the ECM is changed, or the VIN and VIN do not match, the VIN can be registered, or overwritten in the ECM by following this procedure.

2. INPUT INSTRUCTIONS

(a) Hand−held tester

The arrow buttons (UP, DOWN, RIGHT and LEFT) and numerical buttons (0 to 9) are used, in order to input the VIN.

(b) Cursor Operation

To move the cursor around the tester screen, press the RIGHT and LEFT buttons.

(c) Alphabetical Character Input

(1) Press the UP and DOWN buttons to select the desired alphabetical character.

(2) After selection, the cursor should move.

(d) Numeric Character Input

(1) Press the numerical button corresponding to the number that you want to input.

(2) Select or input the correct character using the UP/DOWN buttons, or the numerical buttons.

HINT:

Numerical characters can be selected by using the UP and DOWN buttons.

(e) Correction

(1) After input, the cursor should move.

(2) When correcting the input character(s), put the cursor onto the character using the RIGHT or LEFT buttons.

(f) Finishing Input Operation

(1) Make sure that the input VIN matches the vehicle VIN after input.

(2) Press the ENTER button on the tester.

3. READ VIN (Vehicle Identification Number)

(a) Read VIN using a hand−held tester.

READ:

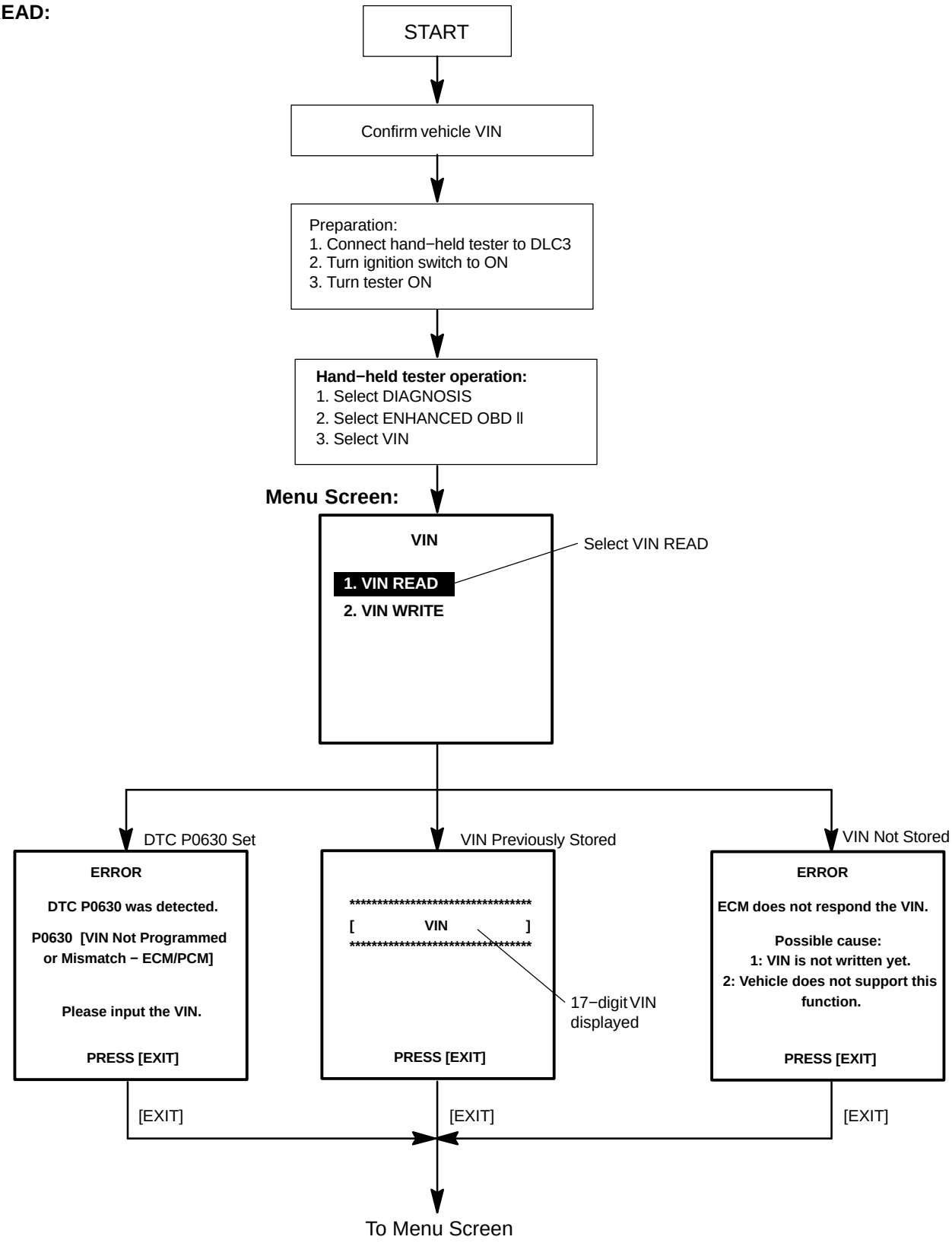

4. WRITE VIN

(a) Write VIN using the hand−held tester.

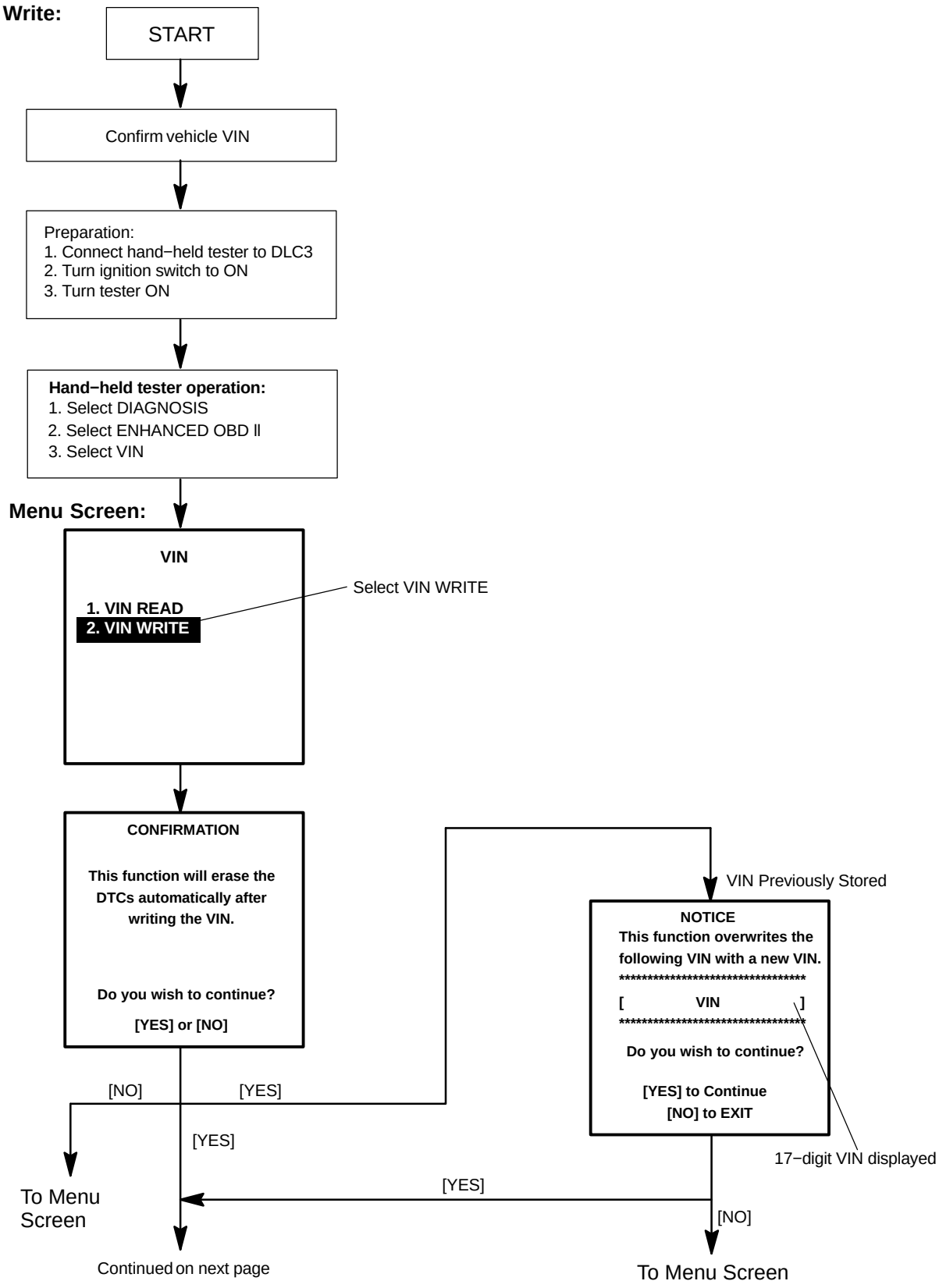

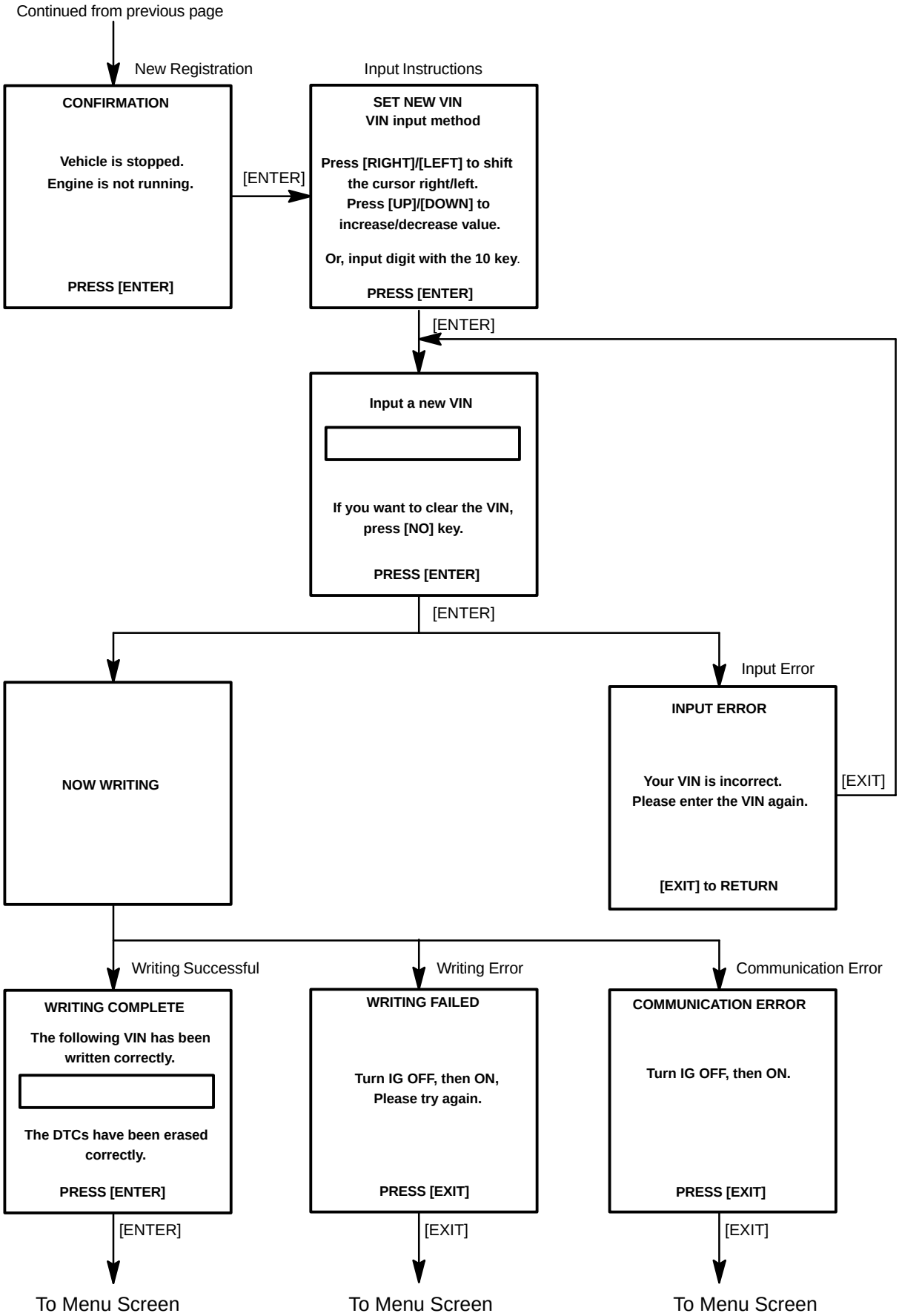
Continued from previous page
New Registration
Input Instructions
CONFIRMATION
Vehicle is stopped.
Engine is not running.
PRESS [ENTER]
[ENTER]
SET NEW VIN
VIN input method
Press [RIGHT]/[LEFT] to shift the cursor right/left.
Press [UP]/[DOWN] to increase/decrease value.
Or, input digit with the 10 key.
PRESS [ENTER]
[ENTER]
Input a new VIN
If you want to clear the VIN, press [NO] key.
PRESS [ENTER]
[ENTER]
Input Error
NOW WRITING
INPUT ERROR
Your VIN is incorrect.
Please enter the VIN again.
[EXIT] to RETURN
[EXIT]
Writing Successful
Writing Error
Communication Error
WRITING COMPLETE
The following VIN has been written correctly.
The DTCs have been erased correctly.
PRESS [ENTER]
WRITING FAILED
Turn IG OFF, then ON,
Please try again.
PRESS [EXIT]
COMMUNICATION ERROR
Turn IG OFF, then ON.
PRESS [EXIT]
[ENTER]
[EXIT]
[EXIT]
To Menu Screen
To Menu Screen
To Menu Screen

DICMO−02

READINESS MONITOR DRIVE PATTERN

1. PURPOSE OF THE READINESS TESTS

- The On−Board Diagnostic (OBD II) system is designed to monitor the performance of emission−related components and report any detected abnormalities in the form of Diagnostic Trouble Codes (DTCs). Since the various components need to be monitored during different driving conditions, the OBD II system is designed to run separate monitoring programs called Readiness Monitors. Many state Inspection and Maintenance (I/M) programs require that vehicles complete their Readiness Monitors prior to beginning an emission test.
- The current status of the Readiness Monitors can be seen by using the hand−held tester with version 9.0 software (or newer), or a generic OBD II Scan tool.
- To view the Readiness Monitor status using the hand−held tester, select ”Monitor Status” from the Enhanced OBD II Menu.
- A status of ”complete” indicates that the necessary conditions have been met to run the performance tests for the related Readiness Monitor.
- The Readiness Monitor will be reset to ”incomplete” if:
  - ECM has lost power (battery or fuse).
  - DTCs have been cleared.
  - The conditions for running the Readiness Monitor have not been met.
- In the event that any Readiness Monitor shows ”incomplete,” follow the appropriate Readiness Monitor Drive Pattern to activate the monitor and change the readiness status to ”complete.”

CAUTION:

Strictly observe the posted speed limits, traffic laws, and road conditions when performing these drive patterns.

NOTICE:

These drive patterns represent the fastest method to satisfy all necessary conditions which allow the specific readiness monitor to complete.

In the event that the drive pattern must be interrupted (possibly due to traffic conditions or other factors) the drive pattern can be resumed, and in most cases, the readiness monitor will still set to ”complete”.

To ensure rapid completion of readiness monitors, avoid sudden changes in vehicle load and speed (driving up and down hills and/or sudden acceleration).

Contents:

TITLE	STEP(s)
CATALYST MONITOR	2
EVAP MONITOR	3, 4
AIR−FUEL RATIO (A/F) AND OXYGEN SENSOR (O2S) MONITOR	5
OXYGEN SENOSR HEATER MONITOR	6

2. CATALYST MONITOR (ACTIVE AIR−FUEL RATIO CONTROL TYPE)

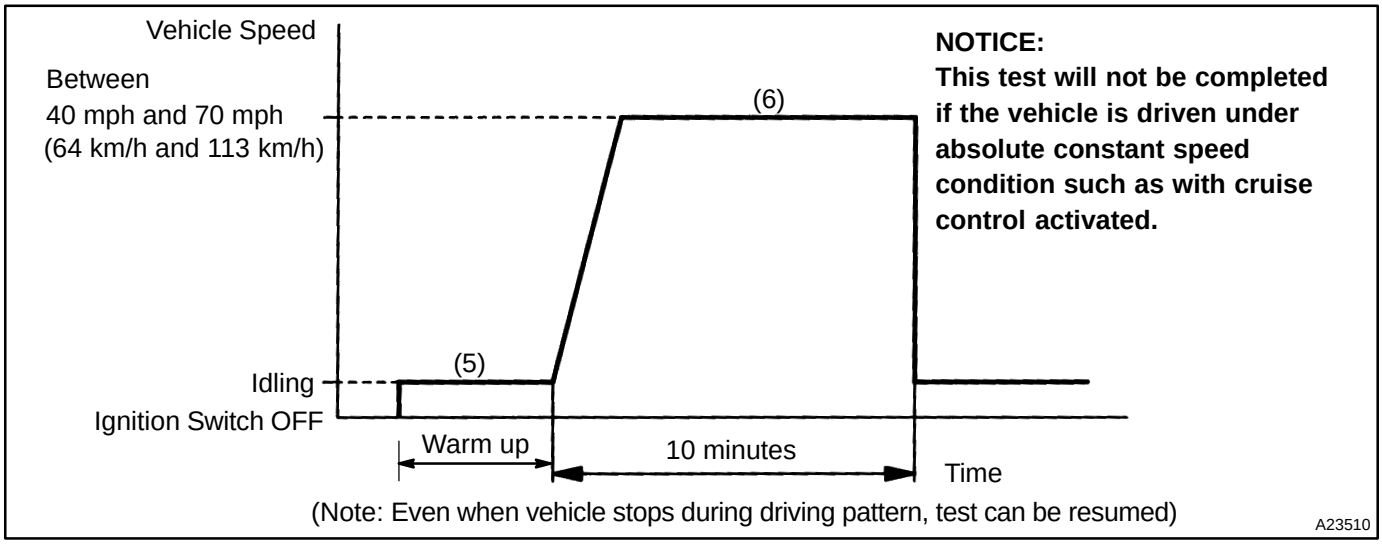

(a) Preconditions

The monitor will not run unless:

- The MIL is OFF

(b) Drive Pattern

(1) Connect a hand−held tester or OBD II scan tool to the DLC3.
(2) Turn the ignition switch to ON.
(3) Turn the tester or scan tool ON.
(4) Clear DTCs (where set) (see page DI−462).
(5) Start the engine and warm it up.
(6) Drive the vehicle at between 40 mph and 70 mph (64 km/h and 113 km/h) for at least 10 minutes.

(c) Monitor Status

(1) Check the Readiness Monitor status displayed on the tester or scan tool.
(2) If the status does not switch to COMPL (complete), extend the driving time.

3. EVAP MONITOR (VACUUM PRESSURE MONITOR)

NOTICE:

A cold soak must be performed prior to conducting the drive pattern to complete the Internal Pressure Readiness Monitor.

(a) Cold Soak Preconditions

The monitor will not run unless:

- MIL is OFF
- Fuel level is approximately 1/2 to 3/4
- Altitude is 7,800 feet (2,400 m) or less

(b) Cold Soak Procedure

Let the vehicle cold soak for 8 hours or until the difference between IAT and ECT becomes less than 7˚C (13˚F)

HINT:

Examples:

- Scenario 1
  ECT = 24˚C (75˚F)
  IAT = 16˚C (60˚F)
  Difference between ECT and IAT is 8˚C (15˚F)
  → The monitor will not run because difference between ECT and IAT is greater than 7˚C (13˚F)
- Scenario 2
  ECT = 21˚C (70˚F)
  IAT = 20˚C (68˚F)
  Difference between ECT and IAT is 1˚C (2˚F)
  → The monitor will run because difference between ECT and IAT is less than 7˚C (13˚F)

4. EVAP MONITOR (VACUUM PRESSURE MONITOR) (CONTINUED)

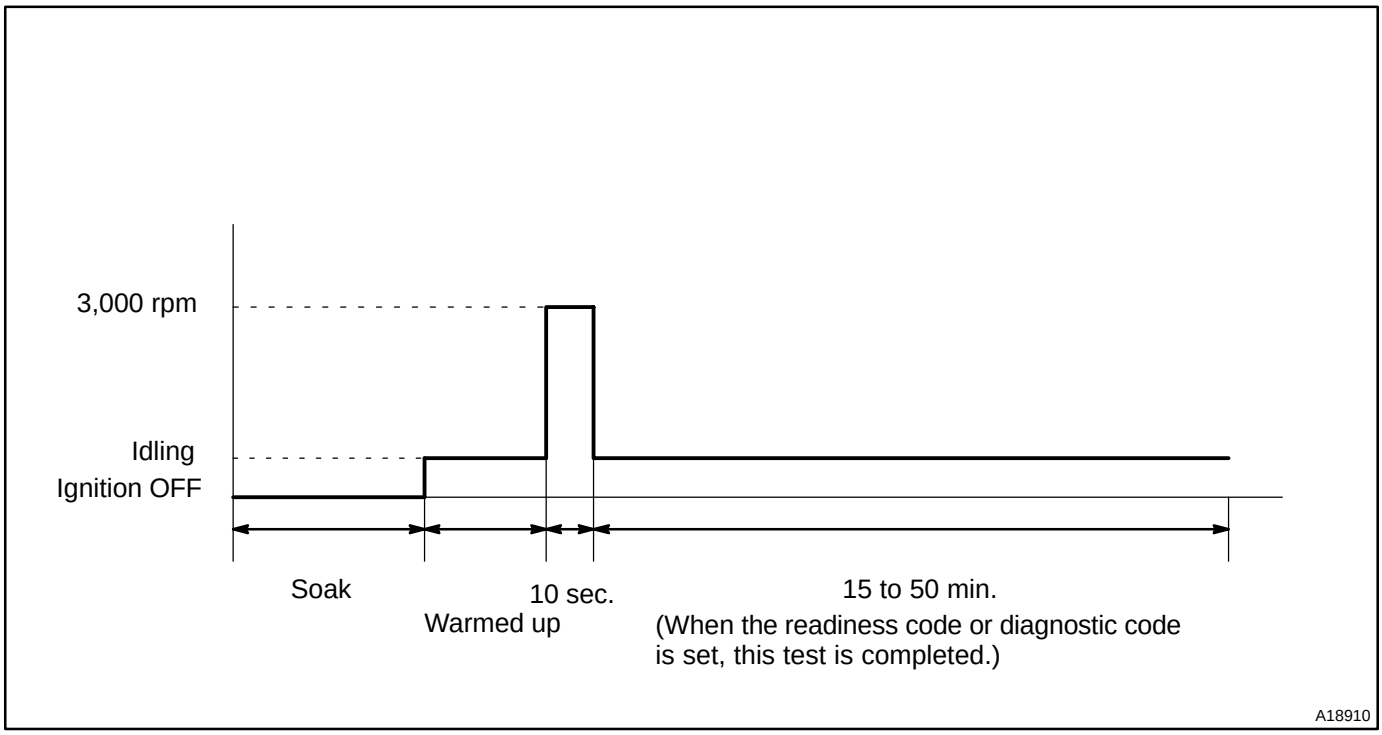

(a) Preconditions

The monitor will not run unless:

- MIL is OFF
- Fuel level is approximately 1/2 to 3/4
- Altitude is 7,800 feet (2,400 m) or less
- Engine Coolant Temperature (ECT) is between 4.4°C and 35°C (40°F and 95°F)
- Intake Air Temperature (IAT) is between 4.4°C and 35°C (40°F and 95°F)
- Cold Soak Procedure has been completed
- Before starting the engine, the difference between ECT and IAT must be less than 7°C (13°F)

HINT:

Examples:

- Scenario 1

  ECT = 24°C (75°F)

  IAT = 16°C (60°F)

  Difference between ECT and IAT is 8°C (15°F)

  → The monitor will not run because difference between ECT and IAT is higher than 7°C (13°F)
- Scenario 2

  ECT = 21°C (70°F)

  IAT = 20°C (68°F)

  Difference between ECT and IAT is 1°C (2°F)

  → The monitor will run because difference between ECT and IAT is less than 7°C (13°F)

The readiness test can be completed in cold ambient conditions (less than 40°F / 4.4°C) and/or at high altitudes (more than 7,800 feet / 2,400 m) if the drive pattern is repeated a second time after cycling the ignition off.

(b) Drive Pattern

(1) Connect the OBD II scan tool to DLC3 to check monitor status and preconditions (refer to (a)).

(2) Release pressure in fuel tank by removing the fuel tank cap and then reinstall it.

(3) Start the engine and allow it to idle until ECT becomes 75°C (167°F) or higher.

(4) Run the engine at 3,000 rpm for approximately 10 seconds.

(5) Allow the engine to idle with the A/C ON (to create slight load) for 15 to 50 minutes.

NOTICE:

If the vehicle is not equipped with A/C, put a slight load on the engine by doing the following :

- **Securely set the parking brake.**
- **Block the drive wheels with wheel chocks.**
- **Allow the vehicle to idle in drive for 15 to 50 minutes.**

5. AIR−FUEL RATIO (A/F) AND OXYGEN SENSOR (HO2) MONITOR (ACTIVE AIR−FUEL RATIO CONTROL TYPE)

(a) Preconditions

The monitor will not run unless:

- 2 minutes or more have elapsed since the engine was started.
- The Engine Coolant Temperature (ECT) is 75°C (167°F) or higher.
- Air−fuel ratio feedback control is performed.
- Fuel−cut control is performed for 8 seconds or more.

(b) Drive Pattern

(1) Connect the hand−held tester to DLC3.
(2) Turn the ignition switch to ON.
(3) Clear DTCs (see page DI−462).
(4) Start the engine, and warm it up until the ECT reaches 75°C (167°F) or higher.
(5) Drive the vehicle at 40 mph (64 km/h) or more for at least 10 minutes.
(6) Change the transmission to 2nd gear.
(7) Accelerate the vehicle to 30 mph (48 km/h) or more by depressing the accelerator pedal for at least 10 seconds.
(8) Soon after performing step (8) above, release the accelerator pedal for at least 4 seconds without depressing the brake pedal, in order to execute fuel−cut control.
(9) Stop the vehicle and allow the engine to idle for 10 seconds or more.
(10) Allow the vehicle to decelerate until the vehicle speed declines to less than 6 mph (10 km/h).
(11) Repeat steps from (8) through (10) above at least 3 times in one driving cycle.

(c) Monitor Status

(1) Check the Readiness Monitor status displayed on the tester.
(2) If the status does not switch to COMPL (complete), make sure that the preconditions have been met, and then perform steps from (5) through (11) in Drive Pattern above.

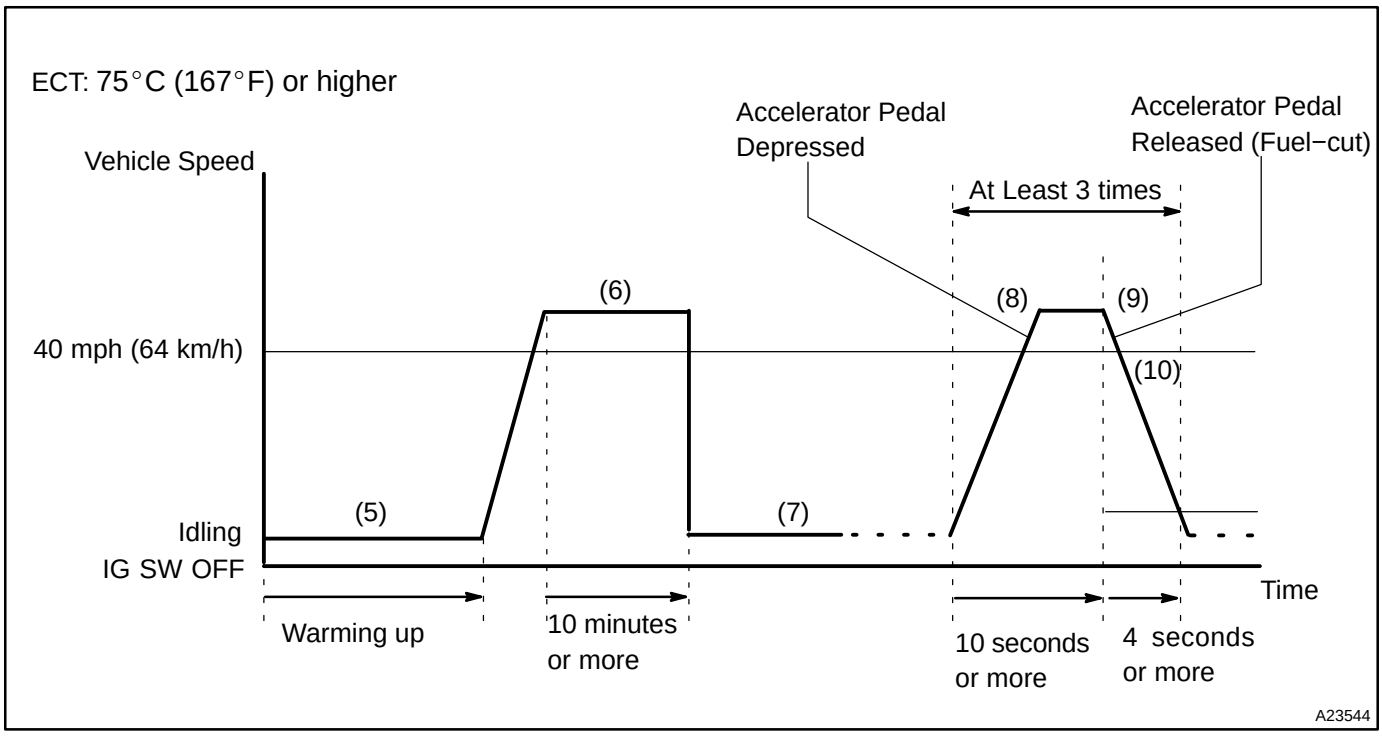

6. OXYGEN SENSOR HEATER MONITOR

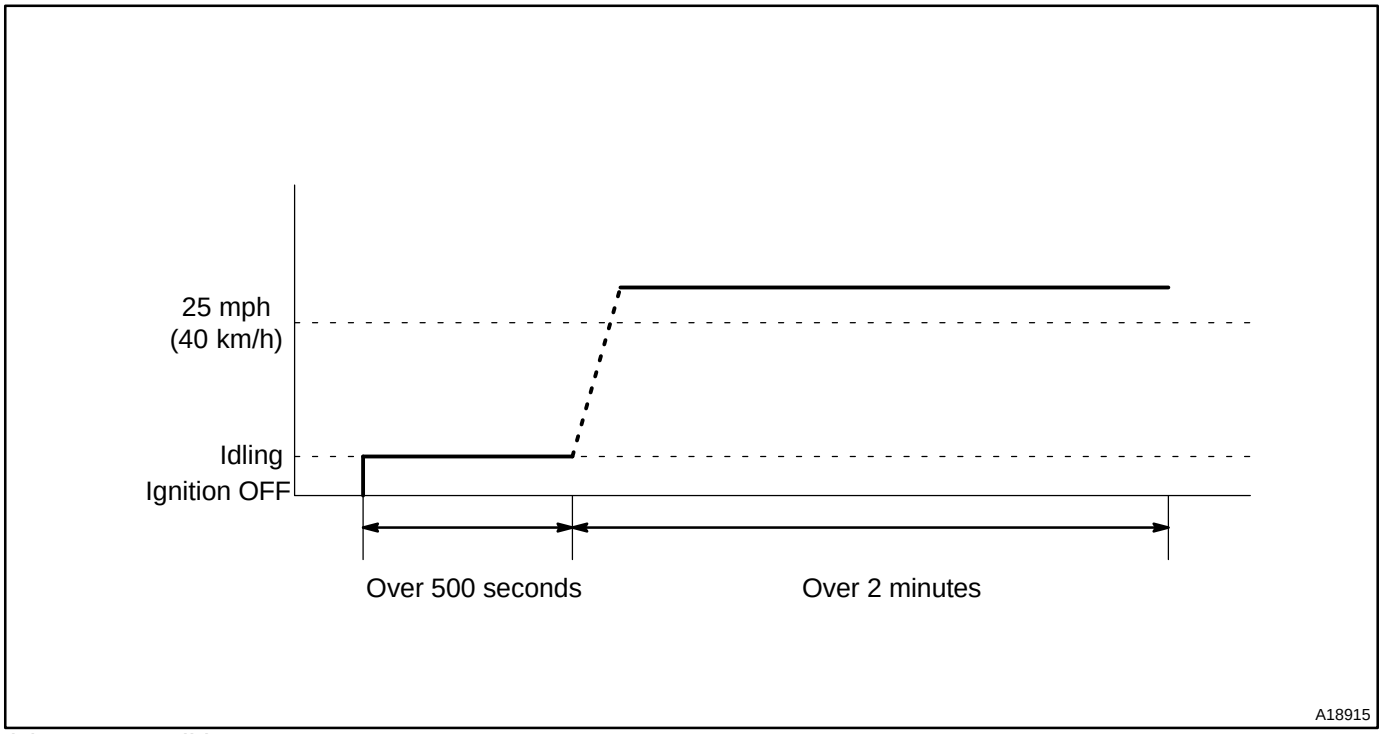

(a) Preconditions

The monitor will not run unless:

- MIL is OFF

(b) Drive Pattern

(1) Connect the OBD II scan tool to the DLC3 to check monitor status and preconditions (refer to (a)).

(2) Start the engine and allow it to idle for 500 seconds or more.

(3) Drive the vehicle at 25 mph (40 km/h) or more for at least 2 minutes.

(4) Check the status of the readiness monitor on the scan tool display. If readiness status did not switch to complete, ensure the preconditions are met, turn the ignition off and then repeat steps (2) and (3).

DIDQU−01

SYSTEM DIAGRAM

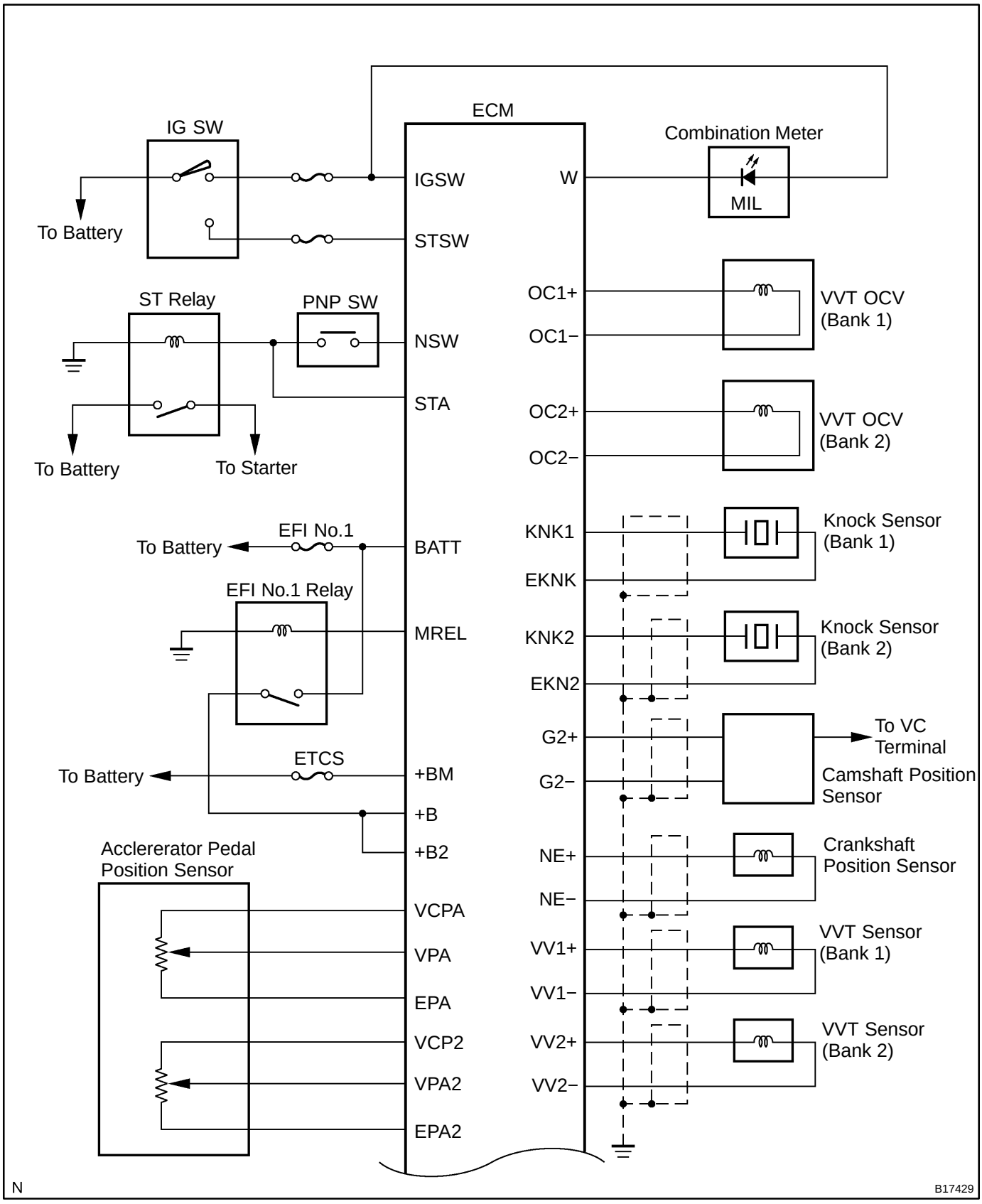

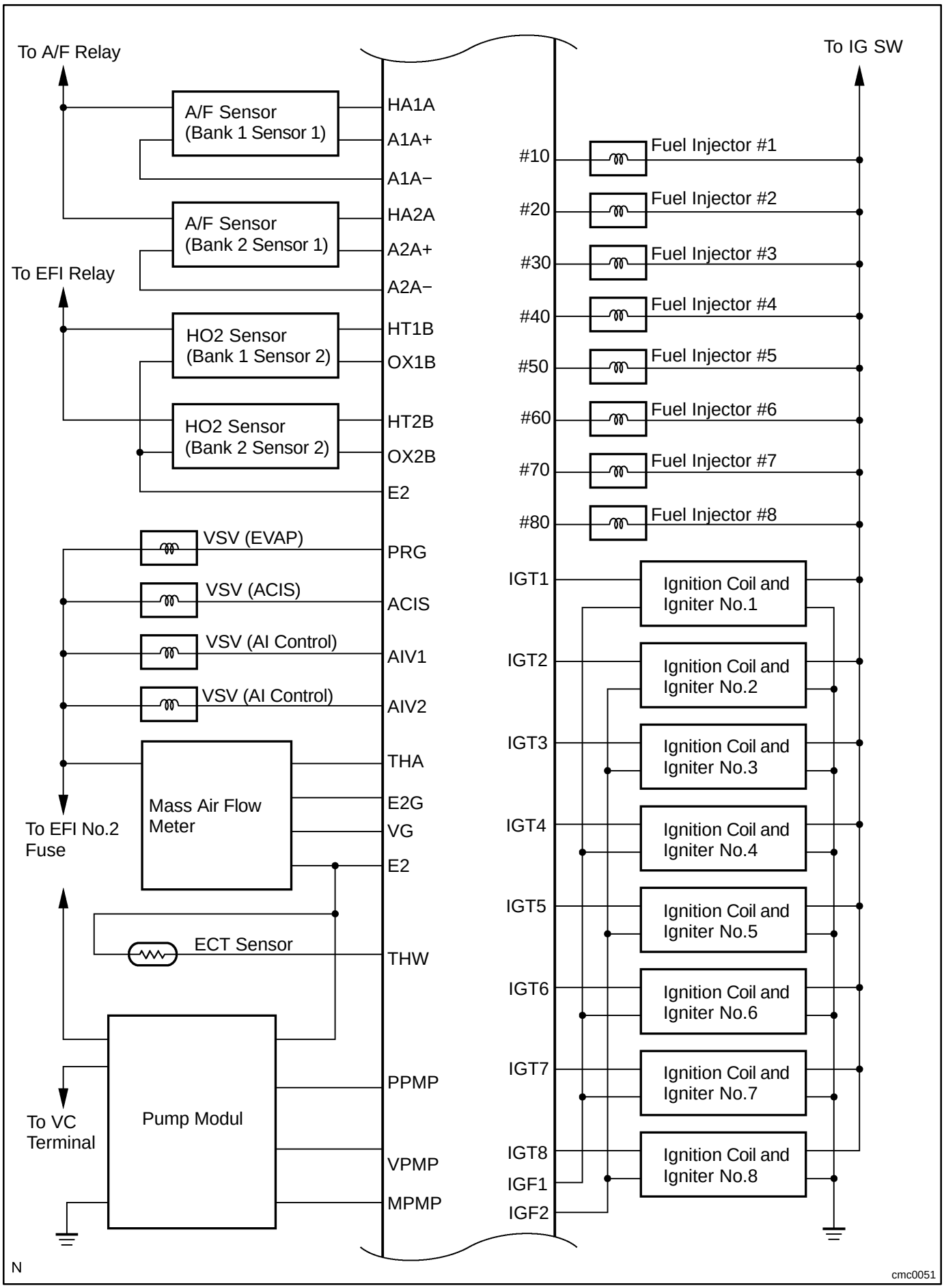
To A/F Relay
A/F Sensor
(Bank 1 Sensor 1)
HA1A
A1A+
A1A−
A/F Sensor
(Bank 2 Sensor 1)
HA2A
A2A+
A2A−
To EFI Relay
HO2 Sensor
(Bank 1 Sensor 2)
HT1B
OX1B
HO2 Sensor
(Bank 2 Sensor 2)
HT2B
OX2B
E2
VSV (EVAP)
PRG
VSV (ACIS)
ACIS
VSV (AI Control)
AIV1
VSV (AI Control)
AIV2
Mass Air Flow
Meter
THA
E2G
VG
E2
To EFI No.2
Fuse
ECT Sensor
THW
Pump Modul
PPMP
VPMP
MPMP
To VC
Terminal
To IG SW
#10
Fuel Injector #1
#20
Fuel Injector #2
#30
Fuel Injector #3
#40
Fuel Injector #4
#50
Fuel Injector #5
#60
Fuel Injector #6
#70
Fuel Injector #7
#80
Fuel Injector #8
IGT1
Ignition Coil and
Igniter No.1
IGT2
Ignition Coil and
Igniter No.2
IGT3
Ignition Coil and
Igniter No.3
IGT4
Ignition Coil and
Igniter No.4
IGT5
Ignition Coil and
Igniter No.5
IGT6
Ignition Coil and
Igniter No.6
IGT7
Ignition Coil and
Igniter No.7
IGT8
Ignition Coil and
Igniter No.8
IGF1
IGF2
N
cmc0051

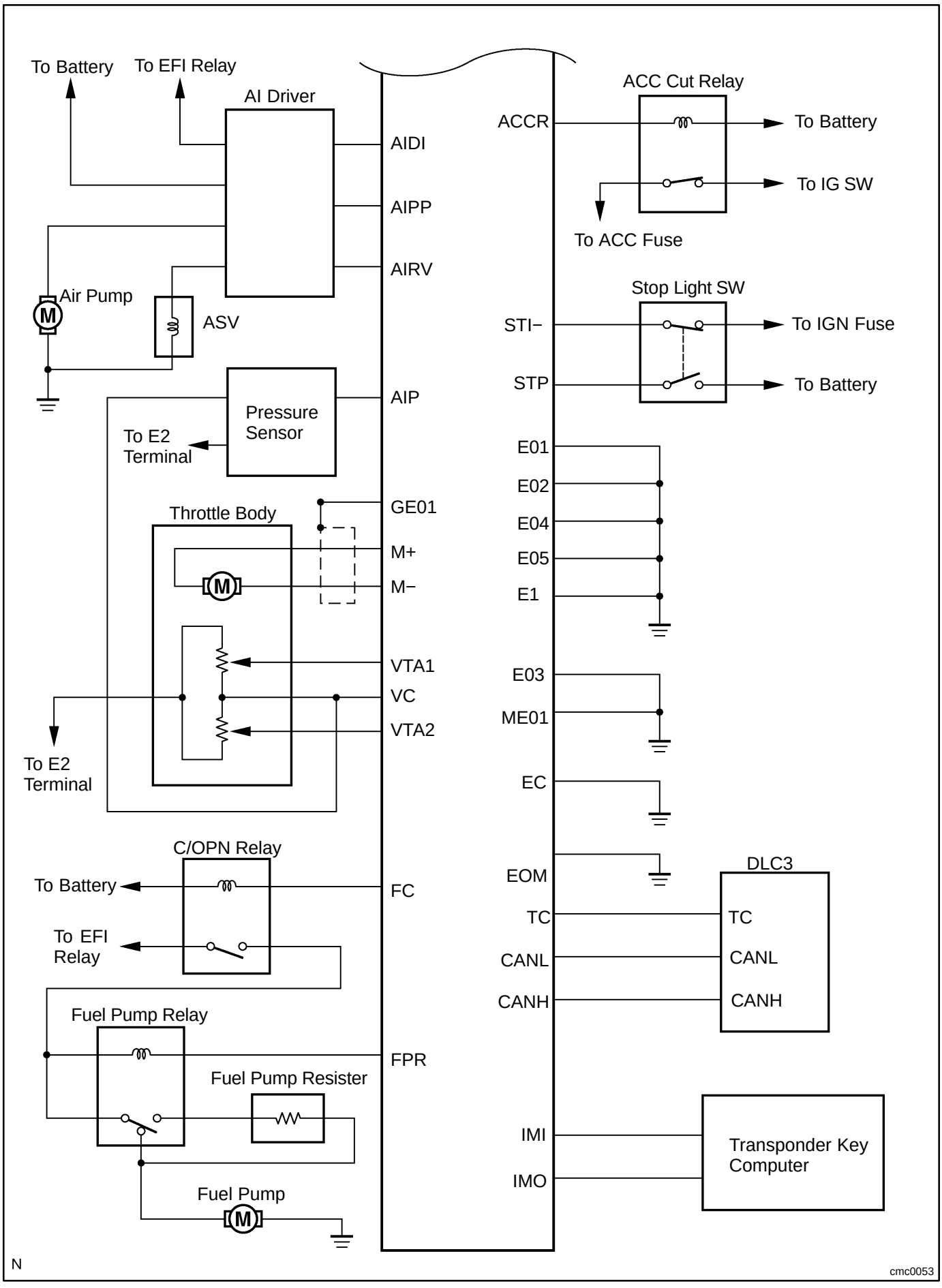
To Battery
To EFI Relay
AI Driver
AIDI
AIPP
AIRV
Air Pump
ASV
Pressure Sensor
AIP
To E2 Terminal
Throttle Body
GE01
M+
M−
VTA1
VC
VTA2
To E2 Terminal
C/OPN Relay
To Battery
To EFI Relay
FC
Fuel Pump Relay
Fuel Pump Resister
FPR
Fuel Pump
ACC Cut Relay
ACCR
To Battery
To IG SW
To ACC Fuse
Stop Light SW
STI−
To IGN Fuse
STP
To Battery
E01
E02
E04
E05
E1
E03
ME01
EC
EOM
DLC3
TC
CANL
CANH
TC
CANL
CANH
IMI
IMO
Transponder Key Computer
N
cmc0053

DIDR1−01

TERMINALS OF ECM

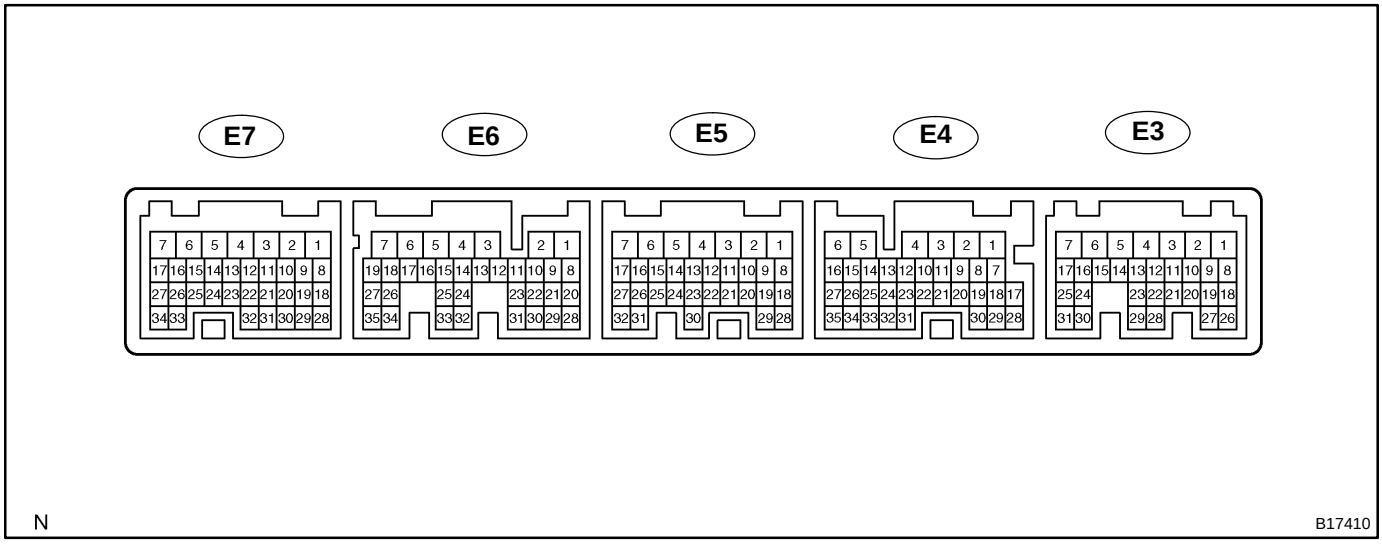

Each ECM terminals' standard voltage is shown in the table below. In the table, first follow the information under "Condition".
Look under "Symbols (Terminals No.)" for the terminals to be inspected.
The standard voltage between the terminals is shown under "STD Voltage".
Use the illustration above as a reference for the ECM terminals.

Symbols (Terminals No.)	Wiring Color	Condition	STD Voltage
BATT (E3−3) − E1 (E5−1)	B−R − BR*2 B−Y − BR*3	Always	9 to 14 V
+BM (E3−7) − E1 (E5−1)	G−Y − BR*2 W−G − BR*3		
IGSW (E3−9) − E1 (E5−1)	B−O − BR	IG switch ON	9 to 14 V
+B (E3−1) − E1 (E5−1)	W−L − BR*2 B−R − BR*3		
+B2 (E3−2) − E1 (E5−1)	W−L − BR*2 B−R − BR*3		
MREL (E3−8) − E1 (E5−1)	GR−G − BR*2 B−W − BR*3	IG switch ON	9 to 14 V
VC (E7−23) − E2 (E7−28)	G−B − B−W	IG switch ON	4.5 to 5.5 V
VG (E7−30) − E2G (E7−29)	R−Y − B−Y	Idling, P or N position, A/C switch OFF	0.5 to 3.0 V
THA (E7−22) − E2 (E7−28)	Y−G − B−W	Idling, Intake air temp. 20°C (68°F)	0.5 to 3.4 V
THW (E7−21) − E2 (E7−28)	G − B−W	Idling, Engine coolant temp. 80°C (176°F)	0.2 to 1.0 V
VTA1 (E7−20) − E2 (E7−28)	GR − B−W	IG switch ON, Accelerator pedal released	0.5 to 1.2 V
		IG switch ON, Accelerator pedal depressed	3.2 to 4.8 V
VTA2 (E7−19) − E2 (E7−28)	P−L − B−W	IG switch ON, Accelerator pedal released	2.0 to 3.1 V
		IG switch ON, Accelerator pedal depressed	4.7 to 5.1 V
VPA (E3−18) − E2 (E7−28)	R−G − B−W	IG switch ON, Accelerator pedal released	0.3 to 0.9 V
		IG switch ON, Accelerator pedal depressed	3.2 to 4.8 V
VPA2 (E3−19) − E2 (E7−28)	L − B−W	IG switch ON, Accelerator pedal released	1.8 to 2.7 V
		IG switch ON, Accelerator pedal depressed	4.7 to 5.1 V
VCPA (E3−26) − EPA (E3−20)	P−G − V−R*2 P−G − V*3	IG switch ON	4.5 to 5.5 V

VCP2 (E3−27) − EPA2 (E3−21)	G−R − LG−R	IG switch ON	4.5 to 5.5 V
#10 (E5−2) − E01 (E7−7) #20 (E5−3) − E01 (E7−7) #30 (E5−4) − E01 (E7−7) #40 (E5−5) − E01 (E7−7) #50 (E5−6) − E01 (E7−7) #60 (E5−7) − E01 (E7−7) #70 (E7−3) − E01 (E7−7) #80 (E7−2) − E01 (E7−7)	R − W−B W − W−B G − W−B R−B − W−B L − W−B Y − W−B L−R − W−B R−W − W−B	IG switch ON	9 to 14 V
		Idling	Pulse generation (See waveform 1)
KNK1 (E6−29) − EKNK (E6−28)	G − R	Maintain engine speed at 4,000 rpm after warming up	Pulse generation (See waveform 2)
KNK2 (E6−21) − EKN2 (E6−20)	W − B		
OC1+ (E5−17) − OC1− (E5−16)	G−B − L−Y	Accelerate slowly after engine warmed−up	Pulse generation (See waveform 3)
OC2+ (E5−15) − OC2− (E5−14)	P−L − W−R	Accelerate slowly after engine warmed−up	Pulse generation (See waveform 3)
VV1+ (E5−25) − VV1− (E5−24)	G − L	Idling	Pulse generation (See waveform 4)
VV2+ (E5−18) − VV2− (E5−28)	W − B	Idling	Pulse generation (See waveform 4)
G2+ (E5−19) − G2− (E5−29)	Y − L	Idling	Pulse generation (See waveform 5)
NE+ (E5−21) − NE− (E5−20)	G − L	Idling	Pulse generation (See waveform 5)
PRG (E7−34) − E1 (E5−1)	W−G − BR	IG switch ON	9 to 14 V
SPD (E4−8) − E1 (E5−1)	G−O − BR	IG switch ON, Rotate driving wheel slowly	Pulse generation (See waveform 6)
M+ (E7−5) − E1 (E5−1)	R − BR	Idling	Pulse generation (See waveform 7)
M− (E7−4) − E1 (E5−1)	W − BR	Idling	Pulse generation (See waveform 8)
FPR (E5−30) − E1 (E5−1)	R−G − BR	IG switch ON	0 to 3.0 V
FC (E3−10) − E1 (E5−1)	Y − BR	IG switch ON	9 to 14 V
IGT1 (E7−8) − E1 (E5−1) IGT2 (E7−15) − E1 (E5−1) IGT3 (E7−11) − E1 (E5−1) IGT4 (E7−10) − E1 (E5−1) IGT5 (E7−13) − E1 (E5−1) IGT6 (E7−12) − E1 (E5−1) IGT7 (E7−14) − E1 (E5−1) IGT8 (E7−9) − E1 (E5−1)	L−Y − BR LG−B − BR L − BR G−R − BR W−R − BR V − BR P − BR LG − BR	Idling	Pulse generation (See waveform 9)
IGF1 (E7−24) − E1 (E5−1) IGF2 (E7−25) − E1 (E5−1)	L−B − BR L−W − BR	IG switch ON	4.5 to 5.5 V
		Idling	Pulse generation (See waveform 9)
A1A+ (E6−22) − E1 (E5−1)	G − BR	Always (Ignition switch ON)	3.3 V*1
A1A− (E6−30) − E1 (E5−1)	L − BR	Always (Ignition switch ON)	3.0 V*1
A2A+ (E6−23) − E1 (E5−1)	V − BR	Always (Ignition switch ON)	3.3 V*1
A2A− (E6−31) − E1 (E5−1)	P − BR	Always (Ignition switch ON)	3.0 V*1
HT1B (E7−1) − E1 (E5−1) HT2B (E6−5) − E1 (E5−1)	R−L − BR Y−B − BR	Idling	Below 3.0 V
		IG switch ON	9 to 14 V
OX1B (E7−18) − E2 (E7−28)	B − B−W	Idling	Pulse generation (See waveform 10)

OX2B (E6−33) − E2 (E7−28)	W − B−W	Idling	Pulse generation (See waveform 10)
STP (E3−15) − E1 (E5−1)	G−W − BR*2 W−R − BR*3	Brake pedal is depressed	7.5 to 14 V
		Brake pedal is released	Below 1.5 V
ST1− (E3−16) − E1 (E5−1)	B − BR*2 G − BR*3	Brake pedal is depressed	Below 1.5 V
		Brake pedal is released	7.5 to 14 V
STA (E5−11) − E1 (E5−1)	P − BR	Shift lever position P or N, Ignition switch START	6.0 V or more
STSW (E5−12) − E1 (E5−1)	R−L − BR	Shift lever position P or N, ignition switch START	6.0 V or more
NSW (E6−8) − E1 (E5−1)	L−R − BR	IG switch ON, Other shift position in P, N	9 to 14 V
		IG switch ON, Shift position in P, N	0 to 3.0 V
W (E4−30) − E1 (E5−1)	V−G − BR	Idling	9 to 14 V
		IG switch ON	Below 3.0 V
TACH (E4−1) − E1 (E5−1)	L−W − BR*2 B − BR*3	Idling	Pulse generation (See waveform 11)
ACIS (E7−33) − E1 (E5−1)	G−W − BR	IG switch ON	9 to 14 V
VPMP (E3−5) − E1 (E5−1)	L−B − BR	Ignition switch ON	9 V to 14 V
MPMP (E3−6) − E1 (E5−1)	R−W − BR	• Vacuum pump OFF • Vacuum pump ON	0 V to 3 V 9 V to 14 V
PPMP (E3−22) − E1 (E5−1)	L−W − BR	Ignition switch ON	3 V to 3.6 V
AIV1 (E7−27) − E1 (E5−1)	B−L − BR	Ignition switch ON	9 to 14 V
AIV2 (E7−26) − E1 (E5−1)	G−Y − BR	Ignition switch ON	9 to 14 V
AIRV (E3−4) − E1 (E5−1)	G−B − BR	Ignition switch ON	9 to 14 V
AIRP (E3−25) − E1 (E5−1)	P − BR	Ignition switch ON	9 to 14 V
AIP (E7−32) − E1 (E5−1)	W−L − BR	Ignition switch ON	3 V to 3.6 V

*1: The ECM terminal voltage is constant regardless of the output voltage from the sensor.
*2: Access Cab, Standard Cab
*3: Double Cab

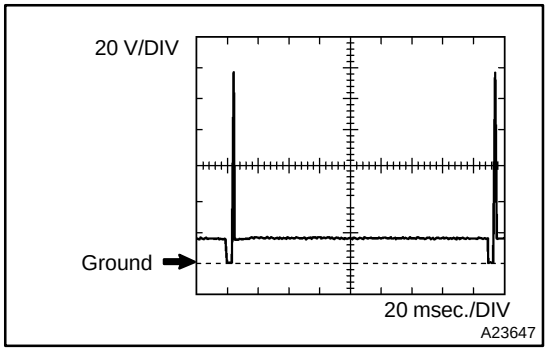

WAVEFORM 1

Fuel injector

ECM Terminal Names	Between #10 (to 40) and E01
Tester Ranges	20 V/DIV, 20 msec./DIV
Conditions	Idling

HINT:

The wavelength becomes shorter as the engine rpm increases.

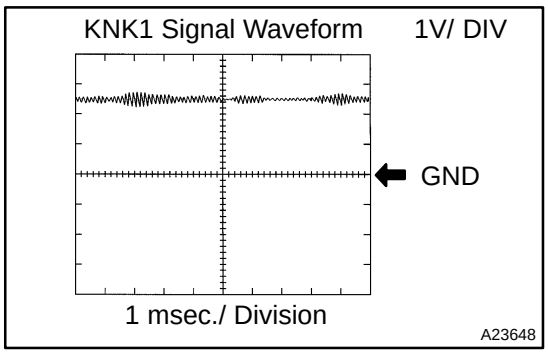

WAVEFORM 2

Knock sensor

ECM Terminal Name	Between KNK1 and EKNK Between KNK2 and EKN2
Tester Range	1 V/DIV, 1 msec./DIV
Condition	Maintain engine RPM at 2,000 rpm after engine warmed−up

HINT:

- The wavelength becomes shorter as engine rpm increases.
- The waveforms and amplitudes displayed differ slightly depending on the vehicle.

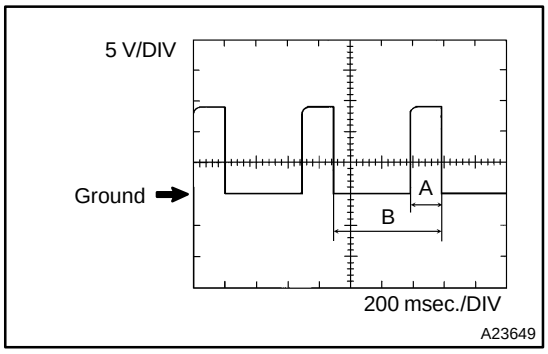

WAVEFORM 3

VVT OCV

ECM Terminal Name	Between OC1+ and OC1− Between OC2+ and OC2−
Tester Range	0.2 V/DIV, 200 msec./DIV
Condition	Accelerate slowly after engine warmed−up

HINT:

In the DATA LIST, the items VVT OCV DUTY B1 and B2 show the duty ratio of voltage flowing to the OCV (see illustration on left).

VVT OCV DUTY B1, B2 = A/B x 100 (%)

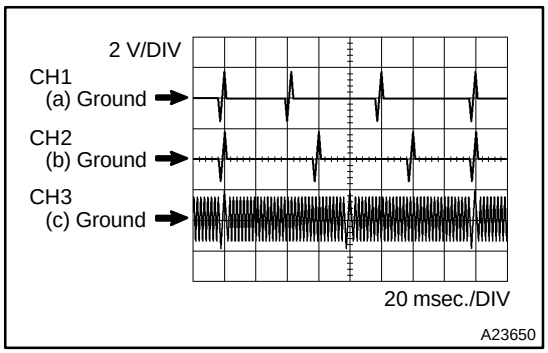

WAVEFORM 4

(a) VVT sensor bank 1

(b) VVT sensor bank 2

(c) Crankshaft position sensor

ECM Terminal Name	(a) Between VV1+ and VV1− (b) Between VV2+ and VV2− (c) Between NE+ and NE−
Tester Range	2 V/DIV, 20 msec./DIV
Condition	Idle after engine warmed−up

HINT:

The wavelength becomes shorter as the engine rpm increases.

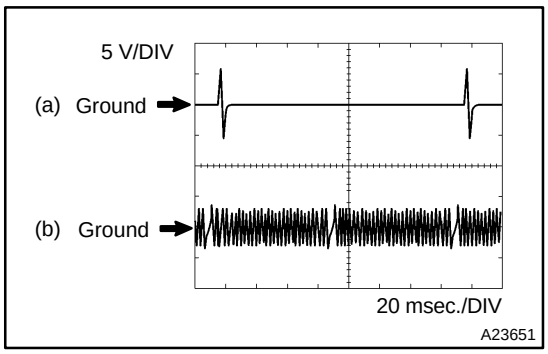

WAVEFORM 5

(a) Camshaft position sensor
(b) Crankshaft position sensor

ECM Terminal Name	(a) Between G2+ and G2− (b) Between NE+ and NE−
Tester Range	5 V/DIV, 20 msec./DIV
Condition	Idle after engine warmed−up

HINT:
The wavelength becomes shorter as the engine rpm increases.

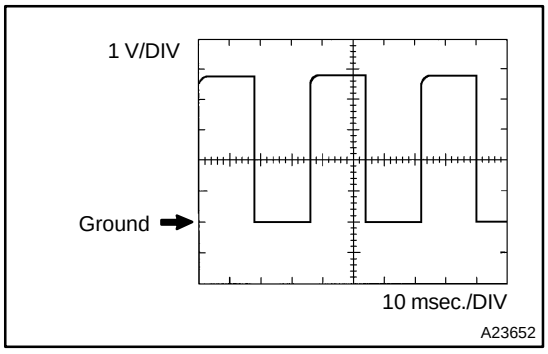

WAVEFORM 6

Vehicle speed signal

ECM Terminal Name	Between SP2+ and SP2−
Tester Range	5 V/DIV, 10 msec./DIV
Condition	Driving by 40 km/h (25 mph)

HINT:
The wavelength becomes shorter as vehicle speed increases.

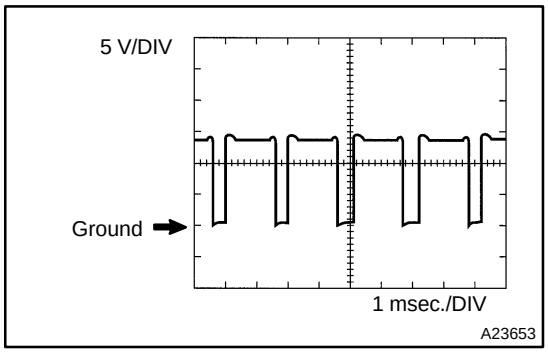

WAVEFORM 7

Throttle actuator positive terminal

ECM Terminal Name	Between M+ and ME01
Tester Range	5 V/DIV, 1 msec./DIV
Condition	Idle after engine warmed−up

HINT:
The duty ratio varies depending on the throttle opening operation.

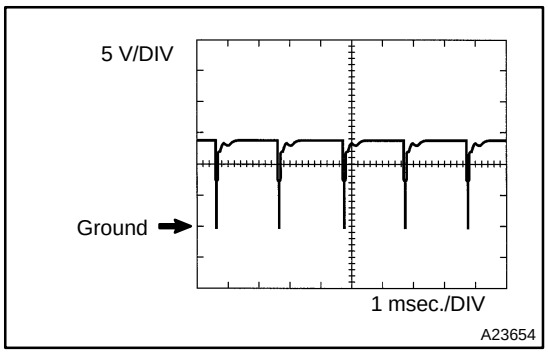

WAVEFORM 8

Throttle actuator negative terminal

ECM Terminal Name	Between M− and ME01
Tester Range	5 V/DIV, 1 msec./DIV
Condition	Idle after engine warmed−up

HINT:
The duty ratio varies depending on the throttle opening operation.

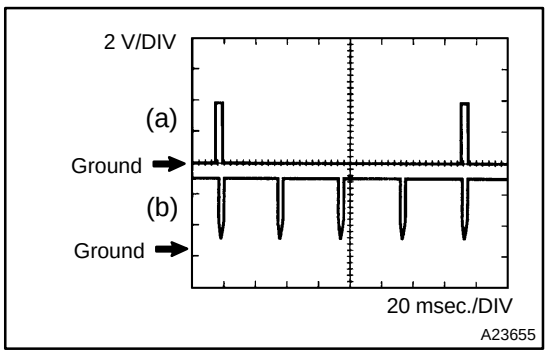

WAVEFORM 9

(a) Igniter IGT signal (from ECM to igniter)
(b) Igniter IGF signal (from igniter to ECM)

ECM Terminal Name	(a) Between IGT1 (to IGT8) and E1 (b) Between IGF1 (IGF2) and E1
Tester Range	2 V/DIV, 20 msec./DIV
Condition	Idling

HINT:
The wavelength becomes shorter as vehicle speed increases.

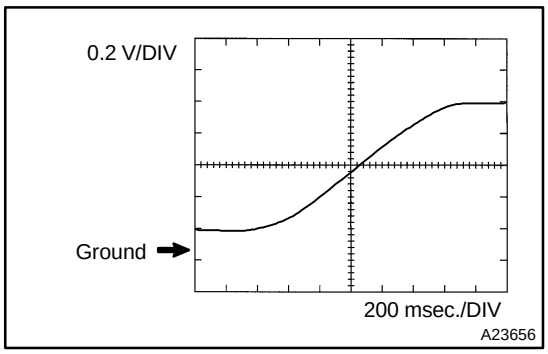

WAVEFORM 10

Heated oxygen sensor

ECM Terminal Names	Between OX1B and E2
Tester Ranges	0.2 V/DIV, 200 msec./DIV
Conditions	Engine speed maintained 2,500 rpm for 2 minutes after warming up sensor

HINT:

In the DATA LIST, item O2S B1S2 shows the ECM input values from the heated oxygen sensor.

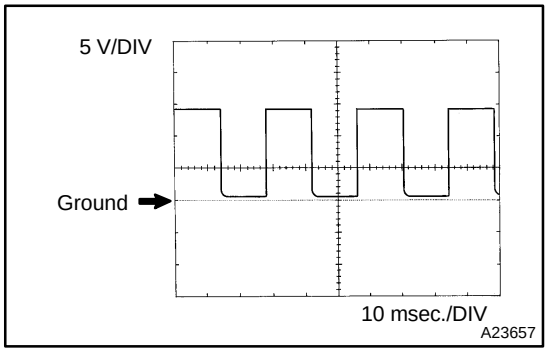

WAVEFORM 11

Engine speed signal

ECM Terminal Names	Between TACH and E1
Tester Ranges	5 V/DIV, 10 msec./DIV
Conditions	Idling

HINT:

The wavelength becomes shorter as vehicle speed increases.

EMISSION CONTROL SYSTEM

EC0O7−01

PURPOSE

The emission control systems are installed to reduce the amount of HC, CO and NOx exhausted from the engine ((3) and (4)), to prevent the atmospheric release of blow−by gas containing HC (1) and evaporated fuel containing HC being released from the fuel tank (2).
The function of each system is shown in the table below:

System	Abbreviation	Function
(1) Positive Crankcase Ventilation	PCV	Reduces HC
(2) Evaporative Emission Control	EVAP	Reduces evaporated HC
(3) Three−way Catalytic Converter	TWC	Reduces HC, CO and NOx
(4) Sequential Multiport Fuel Injection*	SFI	Injects a precisely timed, optimum amount of fuel for reduced exhaust emissions

Remark: * For inspection and repair of the SFI system, refer to the SF section in this manual.

EVAPORATIVE EMISSION (EVAP) CONTROL SYSTEM

EC0OB−01

COMPONENTS

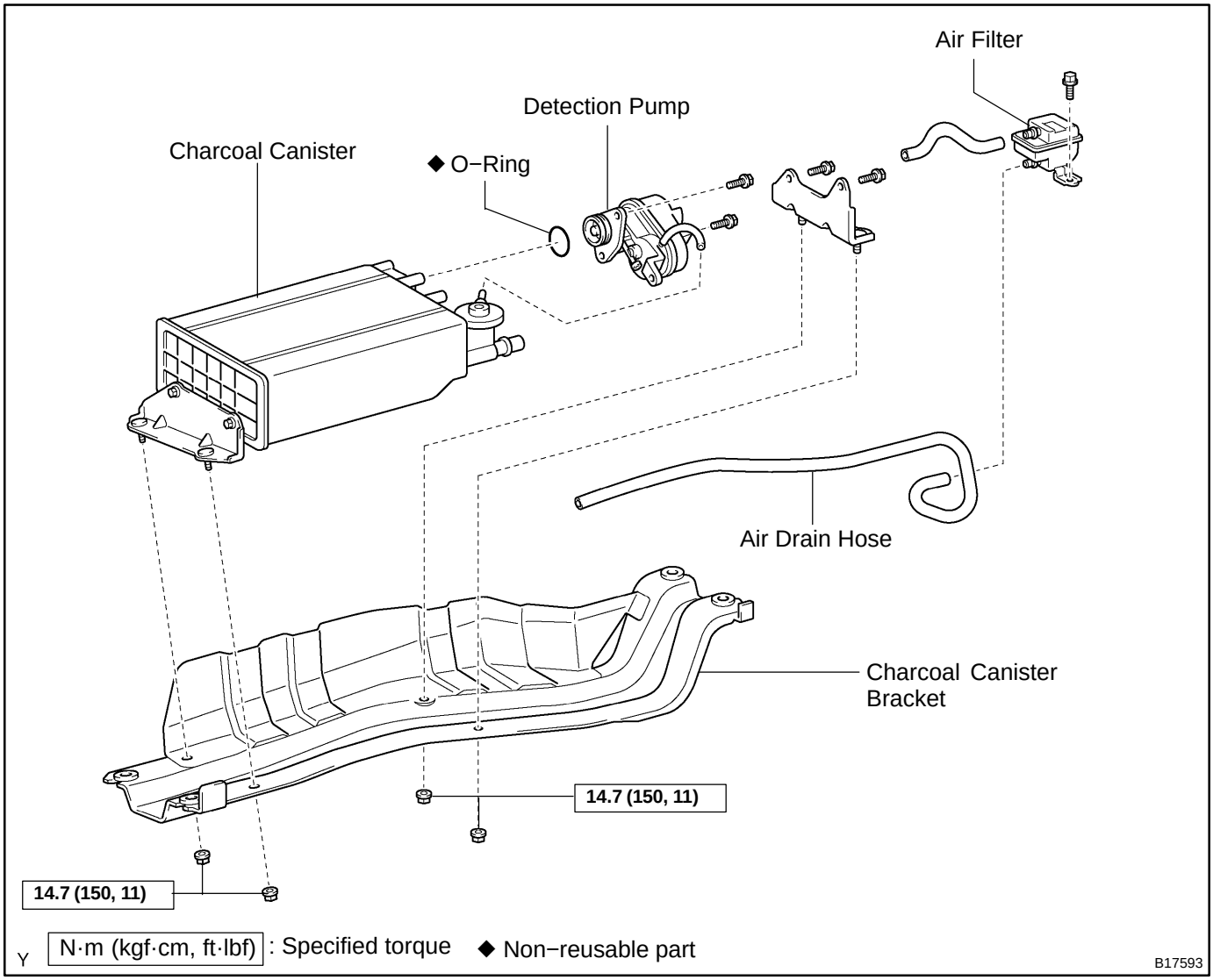

EC0OC−01

INSPECTION

1. INSPECT LINES AND CONNECTIONS

Visually check for loose connections, sharp bends or damage.

2. INSPECT FUEL TANK

Visually check for deformation, cracks or fuel leakage.

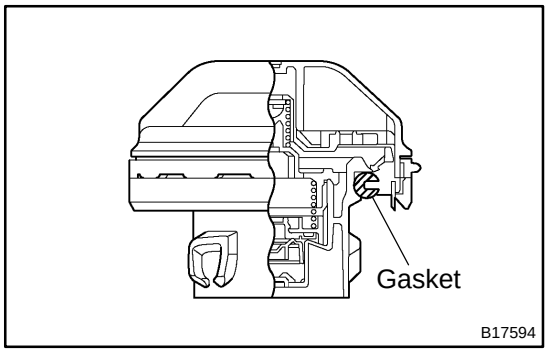

3. INSPECT FUEL TANK CAP

Visually check if the cap and/or gasket are deformed or damaged.

If necessary, repair or replace the cap.

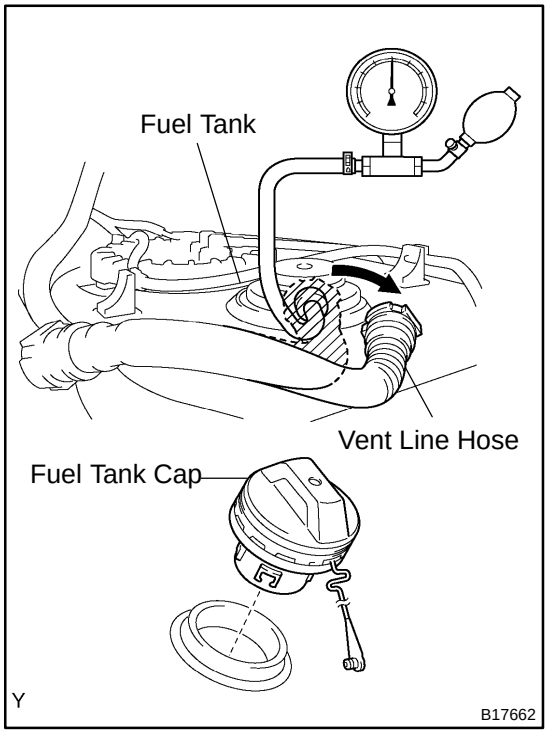

4. INSPECT FUEL CUTOFF VALVE AND FILL CHECK VALVE

(a) Disconnect the vent line hose from the fuel tank.

(b) Connect the pressure gauge to the fuel tank.

(c) Fill the fuel tank with fuel.

(d) Apply pressure of 4 kPa (41 gf/cm^2,0.58 psi) to the vent port of the fuel tank.

HINT:

It is necessary to check the amount of fuel in the fuel tank. When the fuel tank is full, the float valve of the fill check valve is closed and no air can pass through.

(e) Remove the fuel tank cap, and check that the pressure drops.

If the pressure does not drop, replace the fuel tank assembly.

(f) Reconnect the vent line hose to the fuel tank.

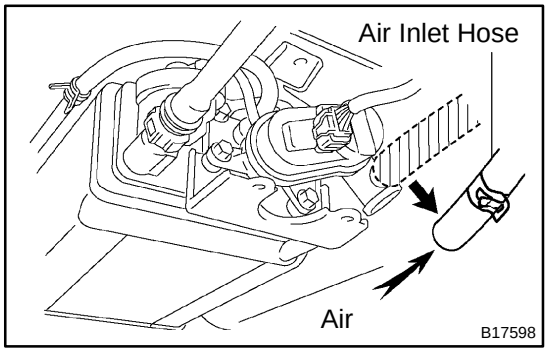

5. CHECK AIR INLET LINE

(a) Disconnect the air inlet line hose from the charcoal canister.

(b) Check that air can flow freely into the air inlet line.

If air cannot flow freely into the air inlet line, repair or replace it.

(c) Reconnect the air inlet line hose to the charcoal canister.

6. REMOVE CHARCOAL CANISTER ASSEMBLY

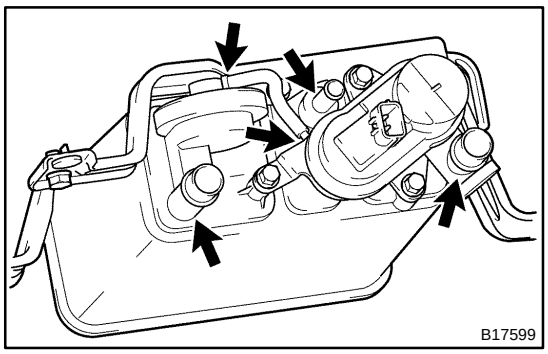

7. INSPECT CHARCOAL CANISTER ASSEMBLY

(a) Visually check the charcoal canister for cracks or damage.

If cracks or damage are found, replace the charcoal canister assembly.

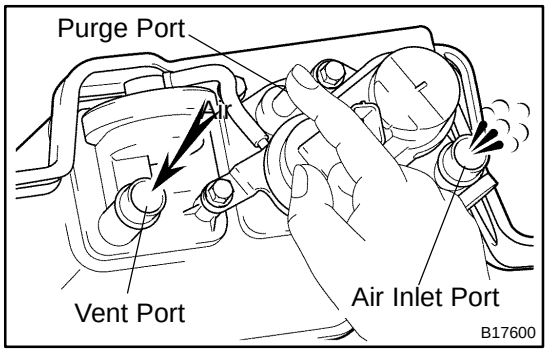

(b) Check charcoal canister operation.

(1) With the purge port closed, blow 1.67 kPa (17.0 gf/cm^2, 0.24 psi) of air into the vent port, and check that air flows from the air inlet port.

If the result is not as specified, replace the charcoal canister assembly.

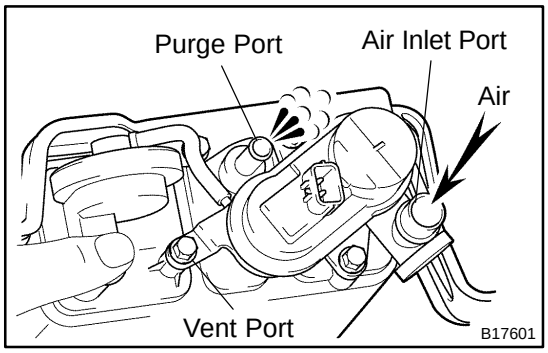

(2) With the vent port closed, blow 1.10 kPa (11.2 gf/cm^2, 0.16 psi) of air to the air inlet port, and check that air flows from the purge port.

If the result is not as specified, replace the charcoal canister assembly.

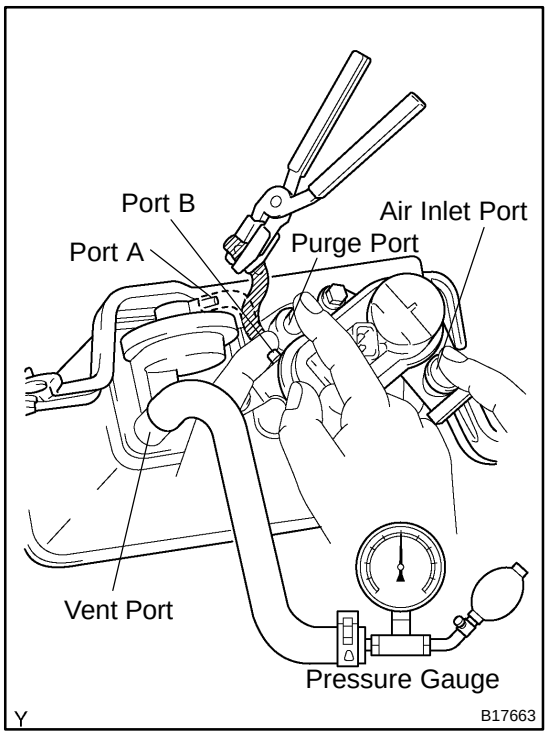

(c) Check for air leakage.

(1) Remove the air hose between ports A and B.

(2) Connect the pressure gauge to the vent port of the charcoal canister.

(3) While holding port B, with the purge port and the air inlet port closed and port A open, apply 19.6 kPa (0.2 kgf/cm^2, 2.81 psi) of pressurized air into the vent port, then confirm that pressure is retained for 1 minute.

If the result is not as specified, replace the charcoal canister assembly.

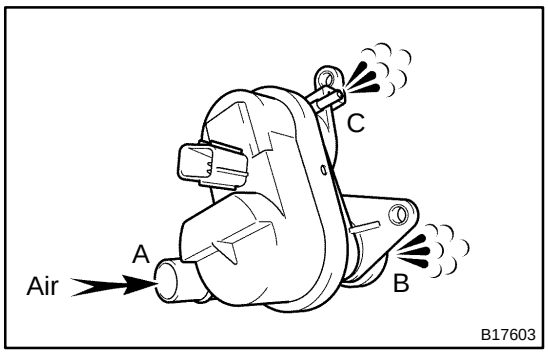

(d) Check leak detection pump.

(1) Remove the detection pump from the charcoal canister.

(2) Check that air flows from port A to B and then to C.

If the result is not as specified, replace the charcoal canister assembly.

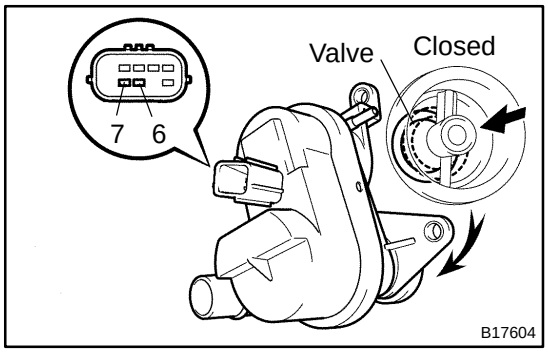

(3) Connect the positive (+) lead of the battery to terminal 7 and the negative (−) lead to terminal 6.

(4) Check that the valve is closed.

If the result is not as specified, replace the charcoal canister assembly.

(5) Install the detection pump.

8. **INSPECT VSV FOR EVAP (See page SF−65)**
9. **REINSTALL CHARCOAL CANISTER ASSEMBLY**

− MEMO −

− MEMO −

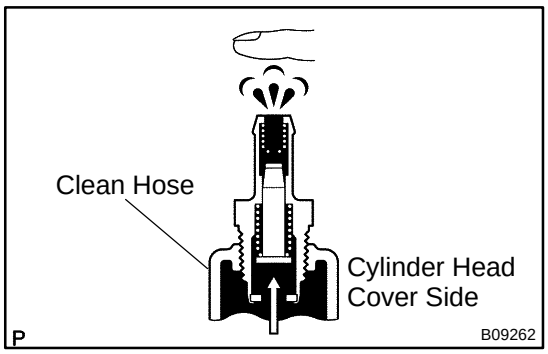

POSITIVE CRANKCASE VENTILATION (PCV) SYSTEM

EC0OA−01

INSPECTION

1. REMOVE V−BANK COVER

2. REMOVE VENTILATION VALVE

3. INSPECT VENTILATION VALVE

(a) Install a clean hose to the ventilation valve.

(b) Inspect ventilation valve operation.

(1) Blow air into the cylinder head side, and check that air passes through smoothly.

CAUTION:

Do not suck air through the valve. Petroleum substances inside the valve are harmful.

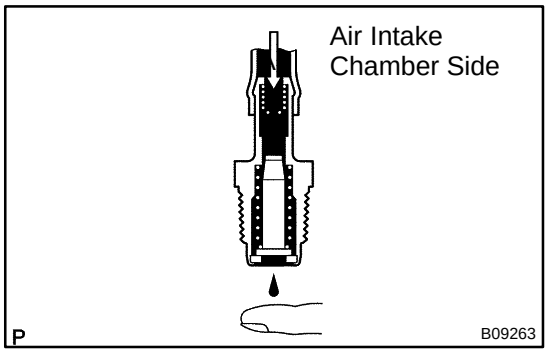

(2) Blow air into the intake manifold side, and check that air does not pass through smoothly.

If operation is not as specified, replace the ventilation valve.

(c) Remove the clean hose from the ventilation valve.

4. INSTALL VENTILATION VALVE

Install the ventilation valve to the LH cylinder head cover.

Torque: 27 N·m (275 kgf·cm, 20 ft·lbf)

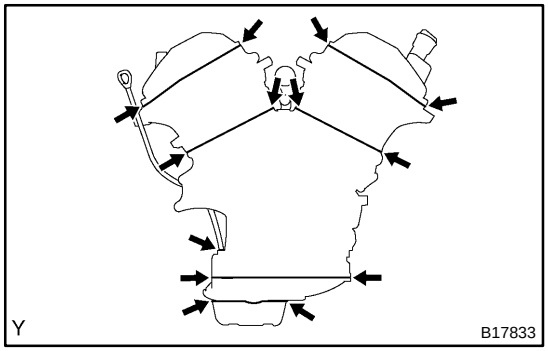

5. VISUALLY INSPECT HOSES, CONNECTIONS AND GASKETS

(a) Check for cracks, leaks or damage.

HINT:

Separation of the engine oil dipstick, oil filler cap, PCV hose, etc. may cause engine failure or malfunctions. Disconnection, looseness or cracks in parts of the air induction system between the throttle body and cylinder head will allow air suction and cause an engine failure or malfunctions.

6. INSTALL V−BANK COVER

EC0O9−01

DRAWING

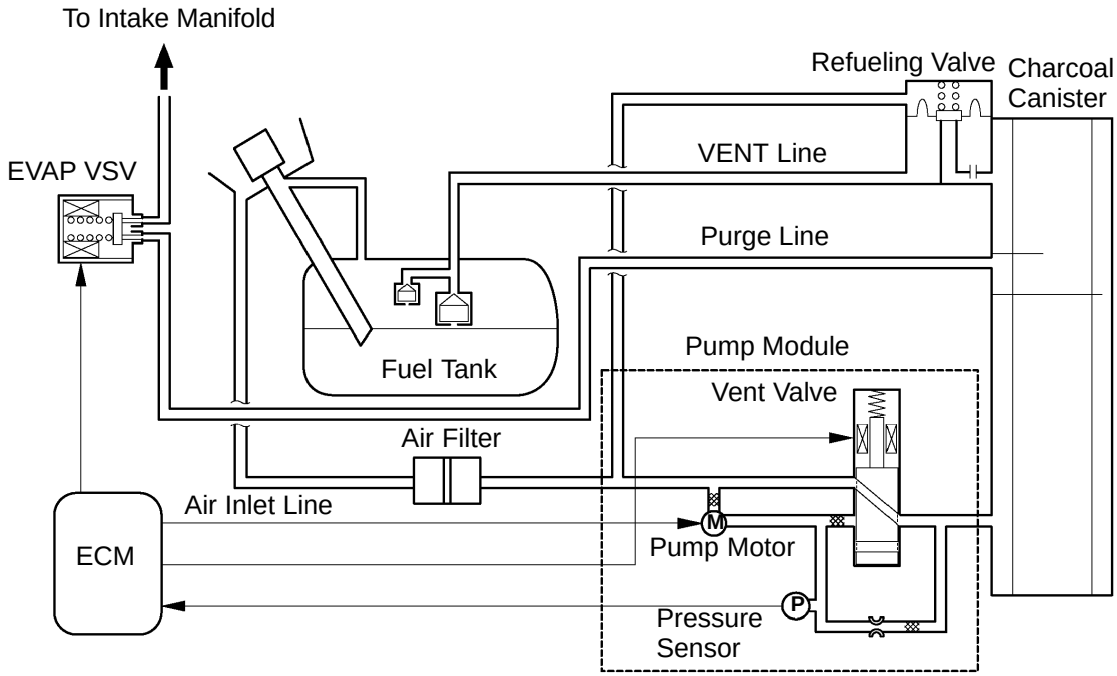

cmc0681

PARTS LAYOUT AND SCHEMATIC DRAWING

LOCATION

EC0O8−01

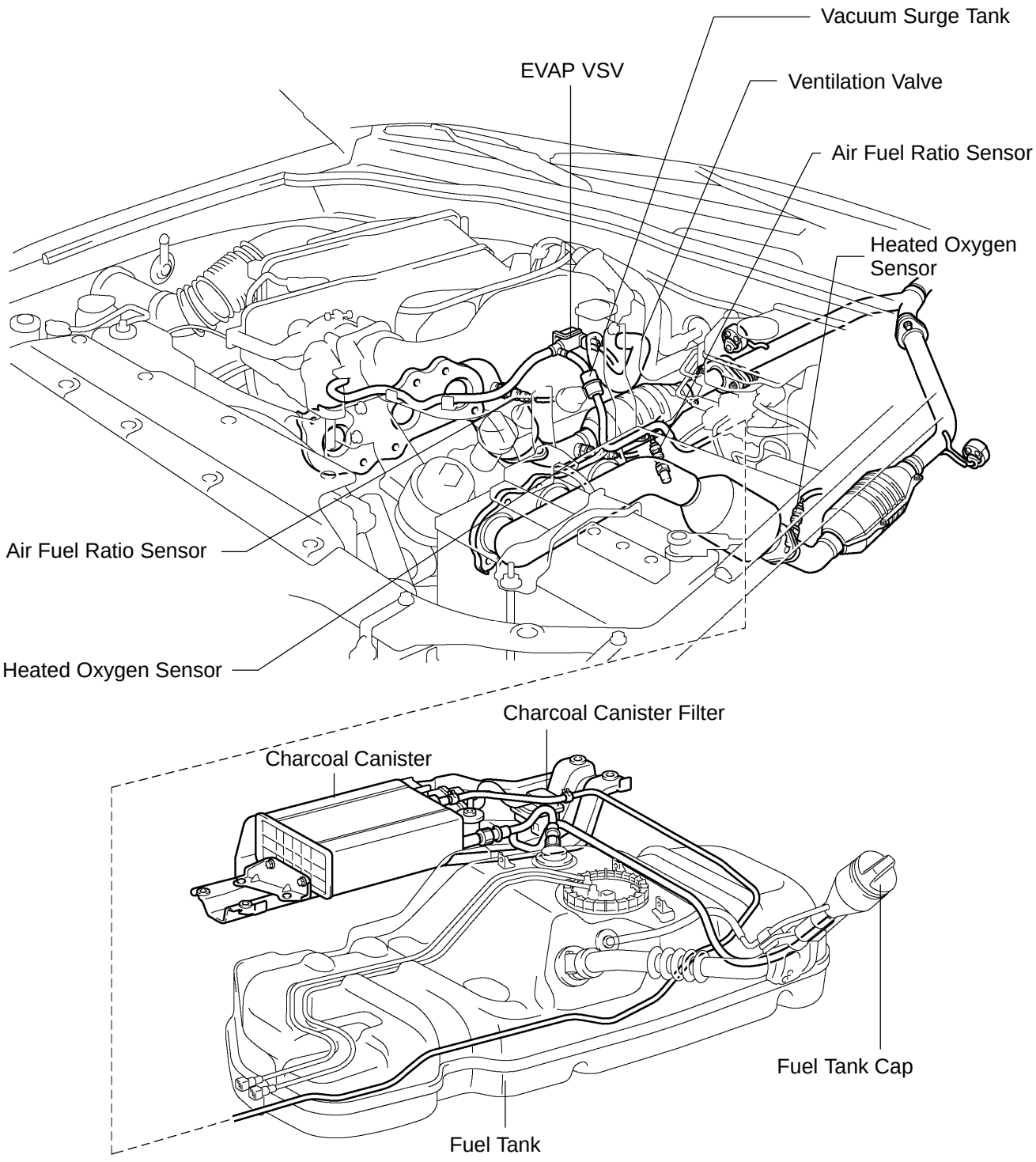

N

cmc0692

THREE−WAY CATALYTIC CONVERTER (TWC) SYSTEM

EC0OE−01

COMPONENTS

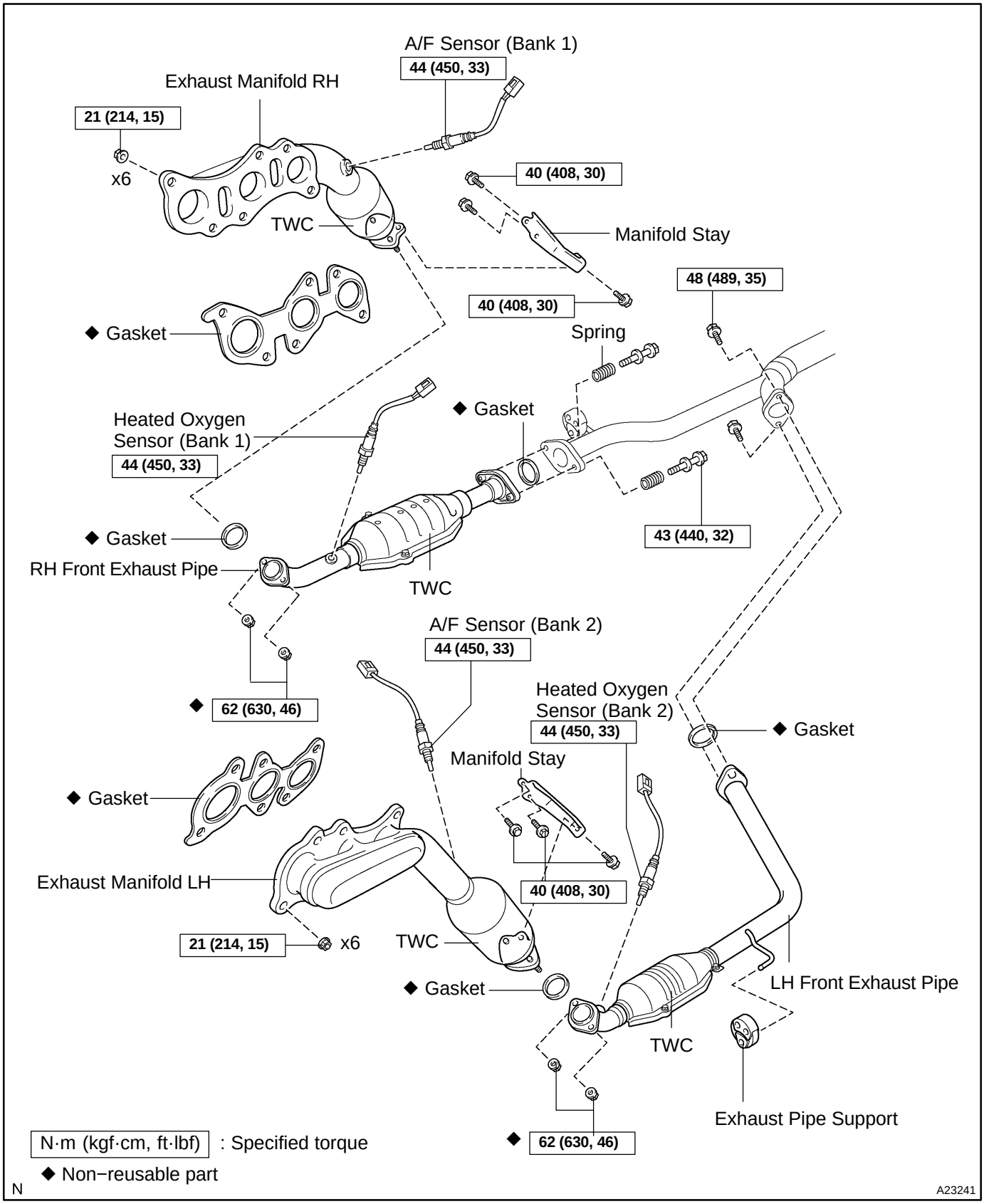

THREE−WAY CATALYTIC CONVERTER (TWC) SYSTEM

EC0OD−01

ON−VEHICLE INSPECTION

1. CHECK EXHAUST PIPE ASSEMBLY

(a) Check the connections for looseness or damage.

(b) Check the clamps for weakness, cracks or damage.

2. INSPECT TWC

Check for dents or damage.

If any part of the protector is damaged or dented to the extent that it contacts the TWC, repair or replace it.

3. INSPECT HEAT INSULATOR

(a) Check the heat insulator for damage.

(b) Check for adequate clearance between the TWC and heat insulator.

EC0OF−01

REPLACEMENT

1. REMOVE HEATED OXYGEN SENSOR (BANK 1)

(a) Disconnect the heated oxygen sensor.

(b) Remove the heated oxygen sensor.

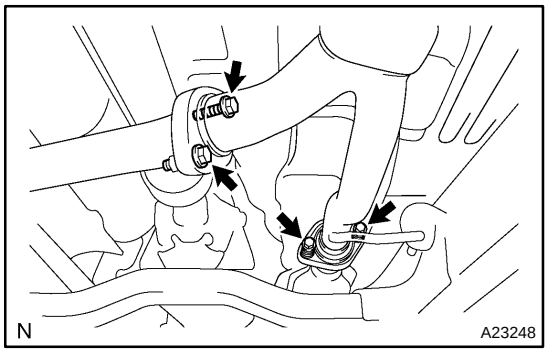

2. SEPARATE EXHAUST CENTER PIPE

Remove the 4 bolts and 2 springs from the exhaust center pipe.

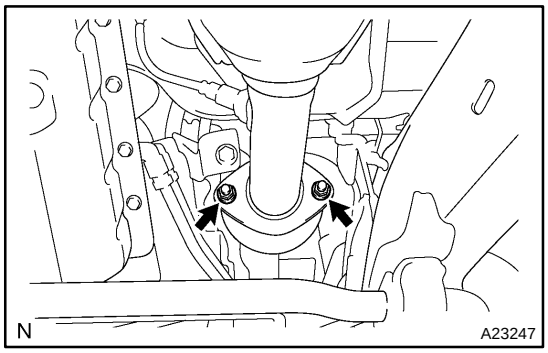

3. REMOVE RH FRONT EXHAUST PIPE

(a) Remove the 2 nuts and RH front exhaust pipe.

(b) Remove the 2 gaskets from the RH front exhaust pipe.

4. REMOVE HEATED OXYGEN SENSOR (BANK 2 OXYGEN SENSOR)

(a) Disconnect the heated oxygen sensor connector.

(b) Remove the heated oxygen sensor.

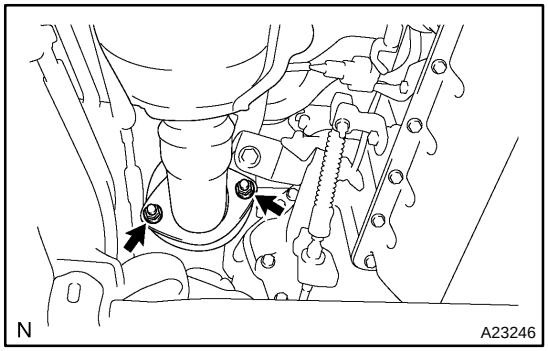

5. REMOVE LH FRONT EXHAUST PIPE

(a) Remove the 2 nuts, exhaust pipe support and LH front exhaust pipe.

(b) Remove the 2 gaskets from the LH front exhaust pipe.

6. REMOVE MANIFOLD STAY

Remove the 6 bolts and 2 manifold stays.

7. REMOVE A/F SENSOR (BANK 1)

(a) Disconnect the A/F sensor connector.

(b) Remove the A/F sensor.

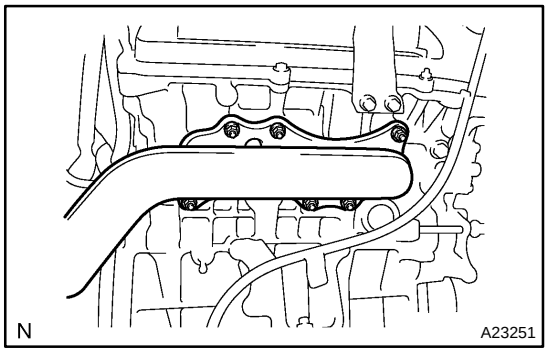

8. REMOVE EXHAUST MANIFOLD RH

Remove the 6 nuts, exhaust manifold RH and gasket.

9. REMOVE A/F SENSOR (BANK 2)

(a) Disconnect the A/F sensor connector.

(b) Remove the A/F sensor.

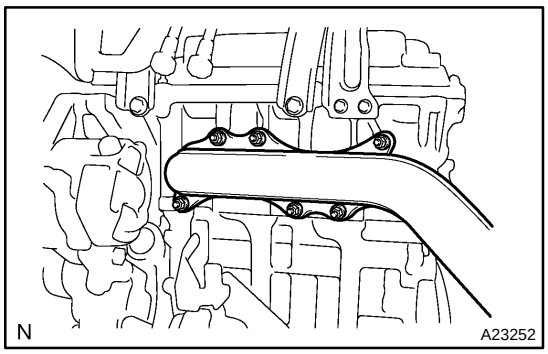

10. REMOVE EXHAUST MANIFOLD LH

Remove the 6 nuts, exhaust manifold LH and gasket.

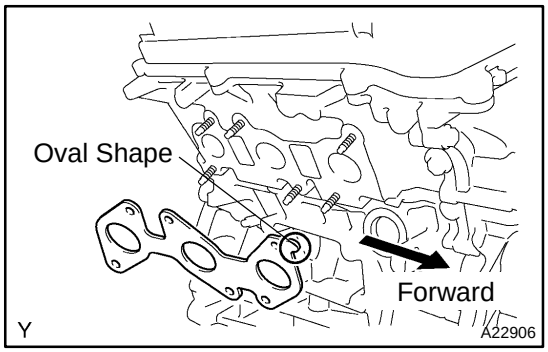

11. INSTALL EXHAUST MANIFOLD RH

(a) Set a new gasket to the RH cylinder head with the oval shape facing forward.

NOTICE:

Be careful of the installation direction.

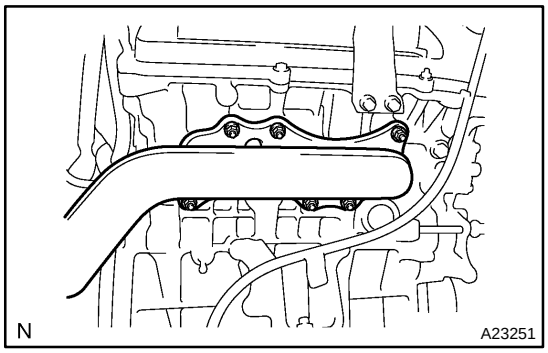

(b) Install the exhaust manifold with the 6 nuts. Tighten the nuts uniformly in several steps.

Torque: 21 N·m (214 kgf·cm, 15 ft·lbf)

12. INSTALL A/F SENSOR (BANK 1)

(a) Install the A/F sensor.

Torque: 44 N·m (450 kgf·cm, 33 ft·lbf)

(b) Connect the A/F sensor connector.

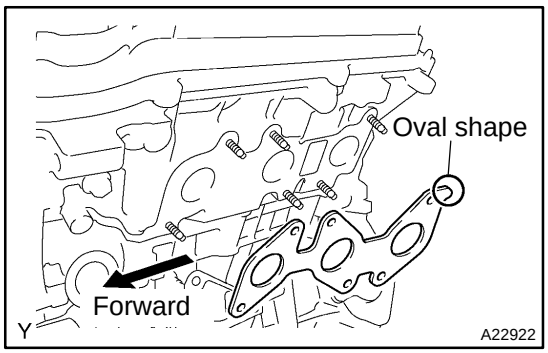

13. INSTALL EXHAUST MANIFOLD LH

(a) Set a new gasket to the LH cylinder head with the oval shape facing backward.

NOTICE:

Be careful of the installation direction.

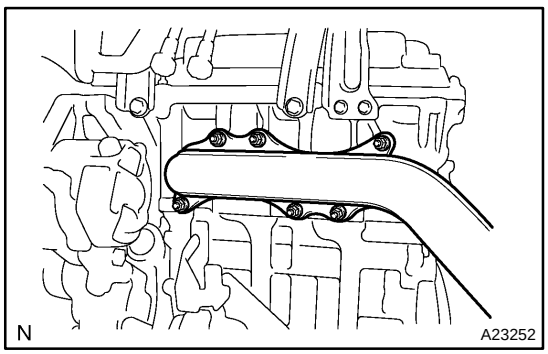

(b) Install the exhaust manifold with the 6 nuts. Tighten the nuts uniformly in several steps.

Torque: 21 N·m (214 kgf·cm, 15 ft·lbf)

14. INSTALL A/F SENSOR (BANK 2)

(a) Install the A/F sensor.

Torque: 44 N·m (450 kgf·cm, 33 ft·lbf)

(b) Connect the A/F sensor connector.

15. INSTALL MANIFOLD STAY

Install the 2 manifold stays with the 6 bolts.

Torque: 40 N·m (408 kgf·cm, 30 ft·lbf)

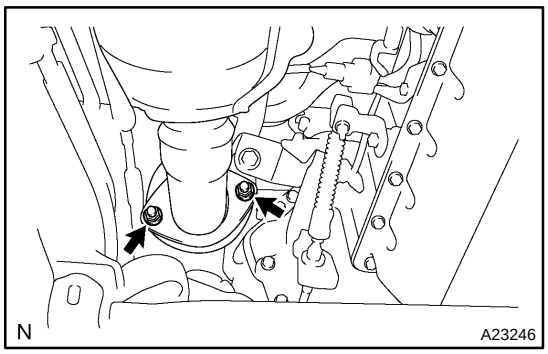

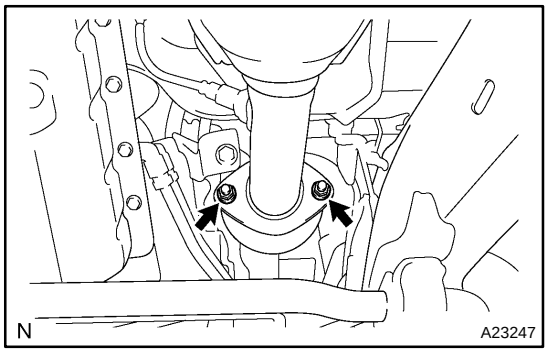

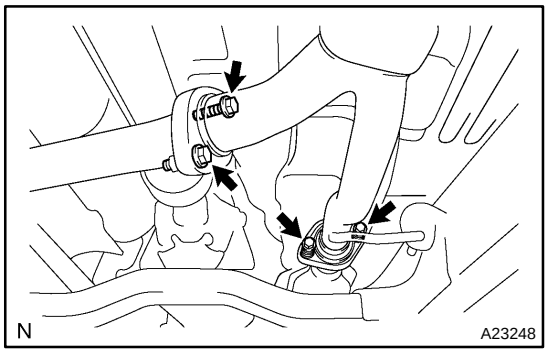

16. INSTALL LH FRONT EXHAUST PIPE

(a) Install 2 new gaskets to the LH front exhaust pipe.

(b) Install the LH front exhaust pipe with 2 new nuts.

Torque: 62 N·m (630 kgf·cm, 46 ft·lbf)

(c) Install the exhaust pipe support.

17. INSTALL HEATED OXYGEN SENSOR (BANK 2 OXYGEN SENSOR)

(a) Install the heated oxygen sensor.

Torque: 44 N·m (450 kgf·cm, 33 ft·lbf)

(b) Connect the heated oxygen sensor connector.

18. INSTALL RH FRONT EXHAUST PIPE

(a) Install 2 new gaskets to the RH front exhaust pipe.

(b) Install the RH front exhaust pipe with 2 new nuts.

Torque: 62 N·m (630 kgf·cm, 46 ft·lbf)

19. INSTALL HEATED OXYGEN SENSOR (BANK 1 OXYGEN SENSOR)

(a) Install the heated oxygen sensor.

Torque: 44 N·m (450 kgf·cm, 33 ft·lbf)

(b) Connect the heated oxygen sensor connector.

20. CONNECT EXHAUST CENTER PIPE

(a) Install the 2 bolts.

Torque: 48 N·m (489 kgf·cm, 35 ft·lbf)

(b) Install the 2 bolts and springs.

Torque: 43 N·m (440 kgf·cm, 32 ft·lbf)

EMISSION CONTROL SYSTEM

EC087−03

PURPOSE

The emission control systems are installed to reduce the amount of HC, CO and NOx exhausted from the engine ((3) and (4)), to prevent the atmospheric release of blow−by gas−containing HC (1) and evaporated fuel containing HC being released from the fuel tank (2).
The function of each system is shown in these table:

System	Abbreviation	Function
(1) Positive Crankcase Ventilation	PCV	Reduces HC
(2) Evaporative Emission Control	EVAP	Reduces evaporated HC
(3) Three−Way Catalytic Converter	TWC	Reduces HC, CO and NOx
(4) Sequential Multiport Fuel Injection*	SFI	Injects a precisely timed, optimum amount of fuel for reduced exhaust emissions

Remark: * For inspection and repair of the SFI system, refer to the SF section in this manual.

EVAPORATIVE EMISSION (EVAP) CONTROL SYSTEM

EC0JK−04

COMPONENTS

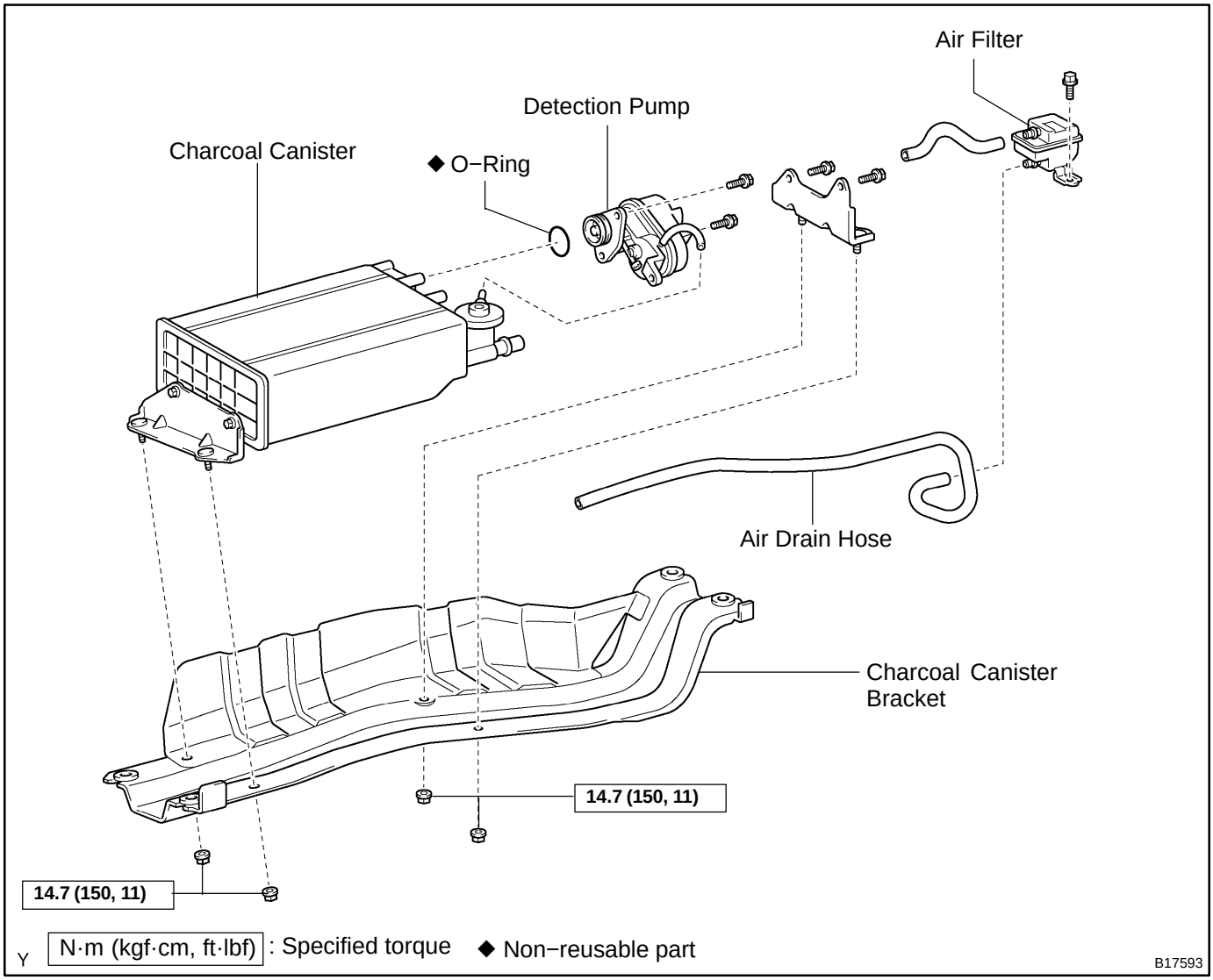

EC0JL−04

INSPECTION

1. INSPECT LINES AND CONNECTIONS

Visually check for loose connections, sharp bends or damage.

2. INSPECT FUEL TANK

Visually check for deformation, cracks or fuel leakage.

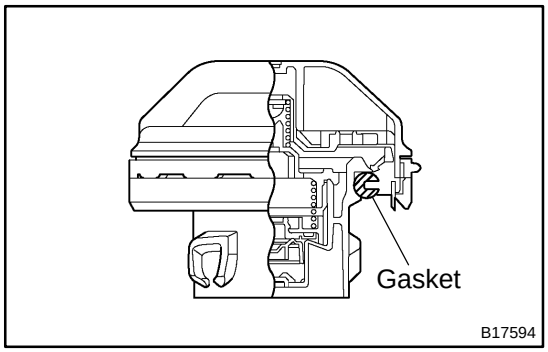

3. INSPECT FUEL TANK CAP

Visually check if the cap and/or gasket are deformed or damaged.

If necessary, repair or replace the cap.

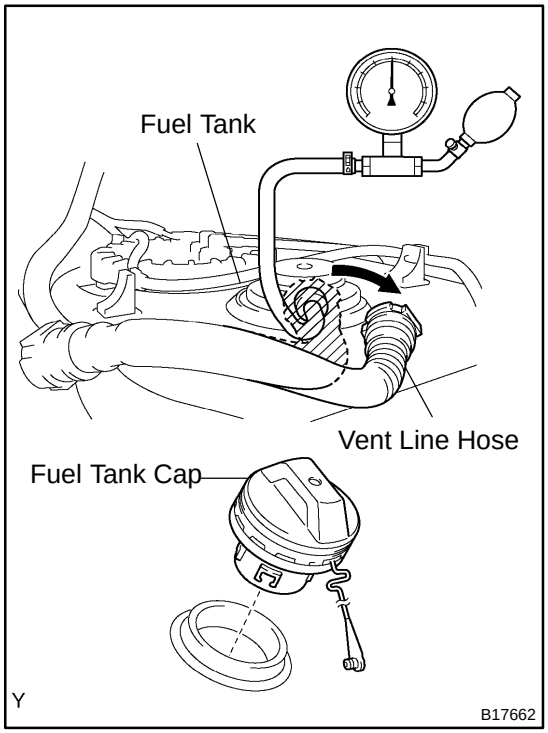

4. INSPECT FUEL CUTOFF VALVE AND FILL CHECK VALVE

(a) Disconnect the vent line hose from the fuel tank.

(b) Connect the pressure gauge to the fuel tank.

(c) Fill the fuel tank with fuel.

(d) Apply pressure of 4 kPa (41 gf/cm^2,0.58 psi) to the vent port of the fuel tank.

HINT:

It is necessary to check the amount of fuel in the fuel tank. When the fuel tank is full, the float valve of the fill check valve is closed and no air can pass through.

(e) Remove the fuel tank cap, and check that the pressure drops.

If the pressure does not drop, replace the fuel tank assembly.

(f) Reconnect the vent line hose to the fuel tank.

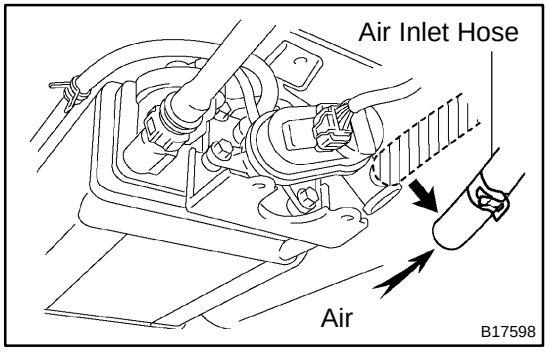

5. CHECK AIR INLET LINE

(a) Disconnect the air inlet line hose from the charcoal canister.

(b) Check that air can flow freely into the air inlet line.

If air cannot flow freely into the air inlet line, repair or replace it.

(c) Reconnect the air inlet line hose to the charcoal canister.

6. REMOVE CHARCOAL CANISTER ASSEMBLY

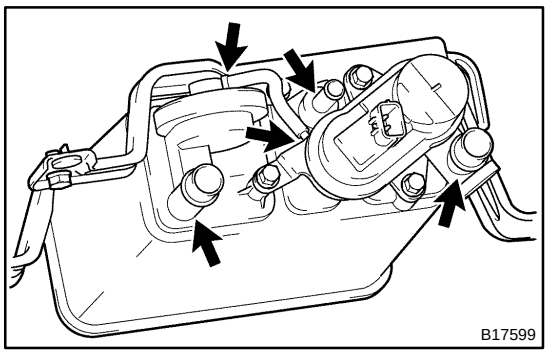

7. INSPECT CHARCOAL CANISTER ASSEMBLY

(a) Visually check the charcoal canister for cracks or damage.

If cracks or damage are found, replace the charcoal canister assembly.

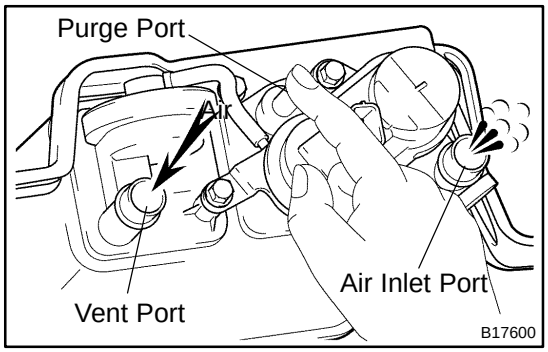

(b) Check charcoal canister operation.

(1) With the purge port closed, blow 1.67 kPa (17.0 gf/cm^2, 0.24 psi) of air into the vent port, and check that air flows from the air inlet port.

If the result is not as specified, replace the charcoal canister assembly.

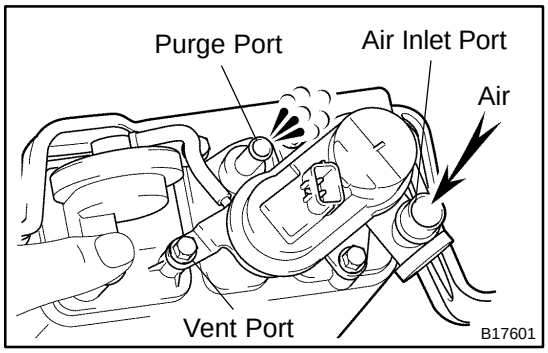

(2) With the vent port closed, blow 1.10 kPa (11.2 gf/cm^2, 0.16 psi) air to the air inlet port, and check that air flows from the purge port.

If the result is not as specified, replace the charcoal canister assembly.

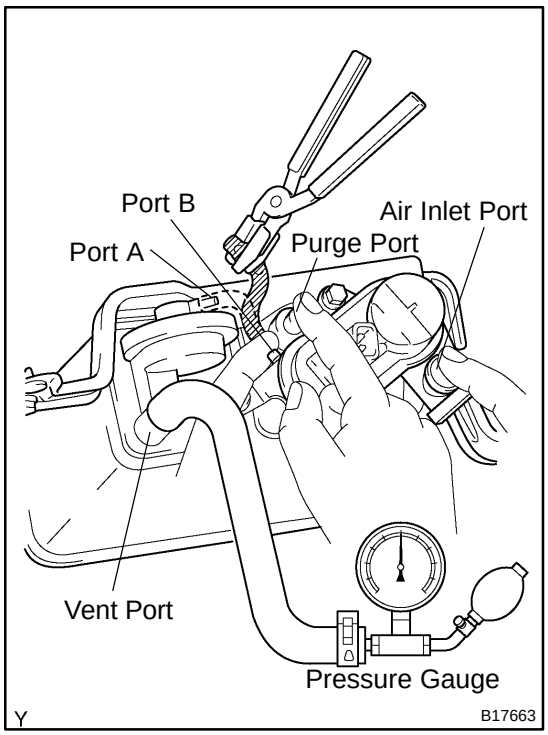

(c) Check for air leakage.

(1) Remove the air hose between ports A and B.

(2) Connect the pressure gauge to the vent port of the charcoal canister.

(3) While holding port B, with the purge port and the air inlet port closed and port A open, apply pressurized air 19.6 kPa (0.2 kgf/cm^2, 2.81 psi) of pressurized air into the vent port, then confirm that the pressure is retained for 1 minute.

If the result is not as specified, replace the charcoal canister assembly.

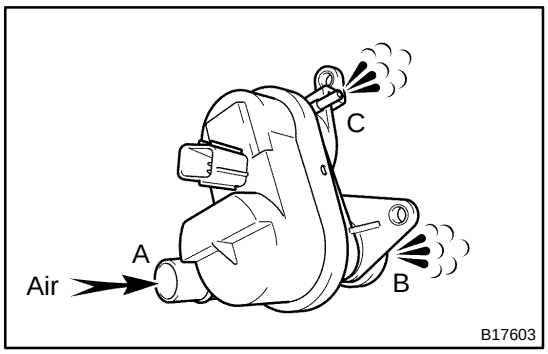

(d) Check leak detection pump.

(1) Remove the detection pump from the charcoal canister.

(2) Check that air flows from port A to B and then C.

If the result is not as specified, replace the charcoal canister assembly.

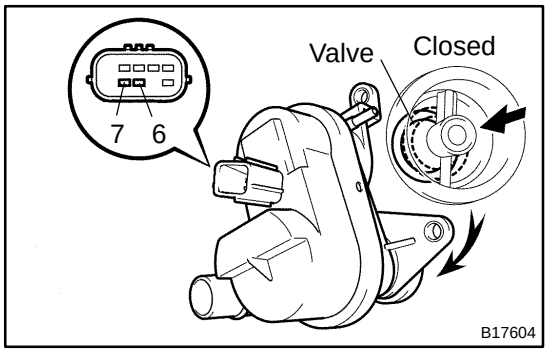

(3) Connect the positive (+) lead to terminal 7 and the negative (−) lead to terminal 6.

(4) Check that the valve is closed.

If the result is not as specified, replace the charcoal canister assembly.

(5) Install the detection pump.

8. **INSPECT VSV FOR EVAP (See page SF−65)**
9. **REINSTALL CHARCOAL CANISTER ASSEMBLY**

− MEMO −

− MEMO −

POSITIVE CRANKCASE VENTILATION (PCV) SYSTEM

EC0MB−01

COMPONENTS

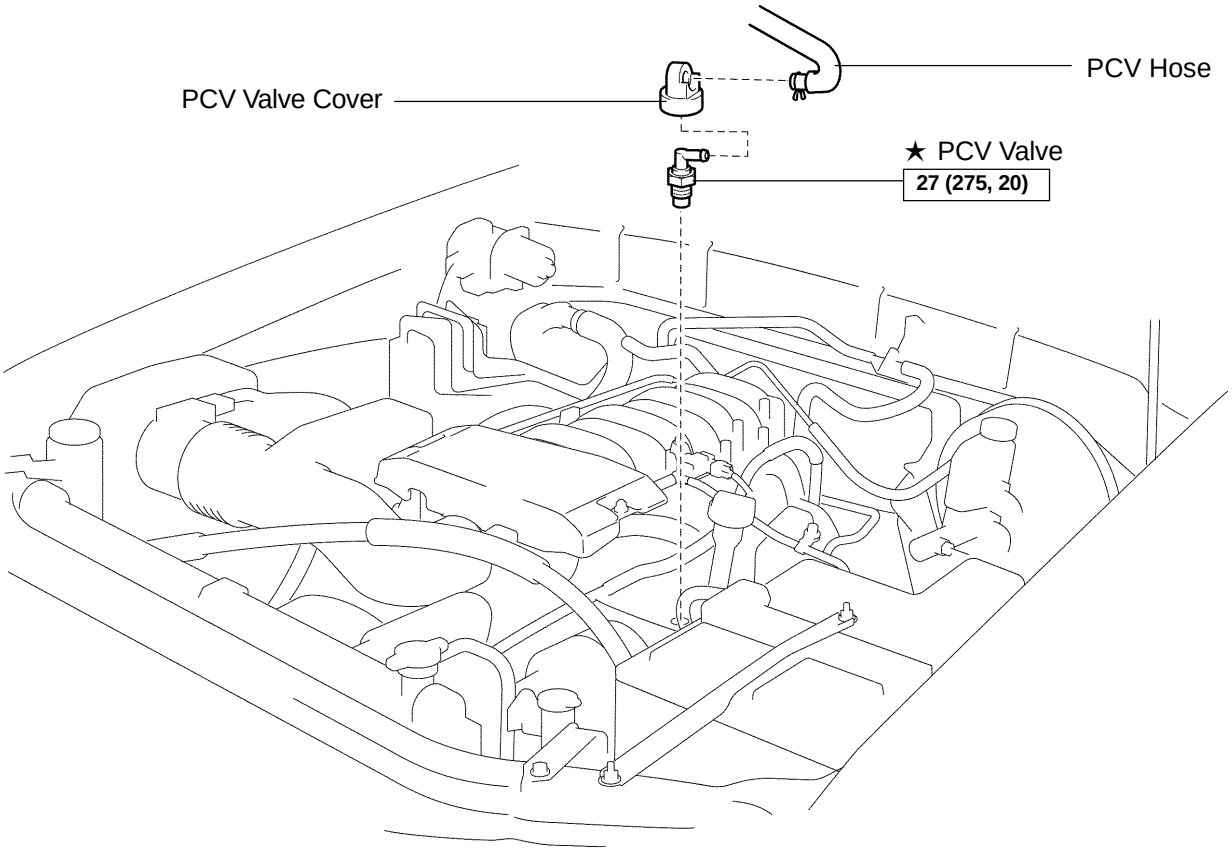

N·m (kgf·cm, ft·lbf) : Specified torque

★ Precoated part

P

B16483

EC0NP−02

INSPECTION

1. REMOVE V−BANK COVER

2. INSPECT PCV VALVE

(a) Remove the PCV valve.

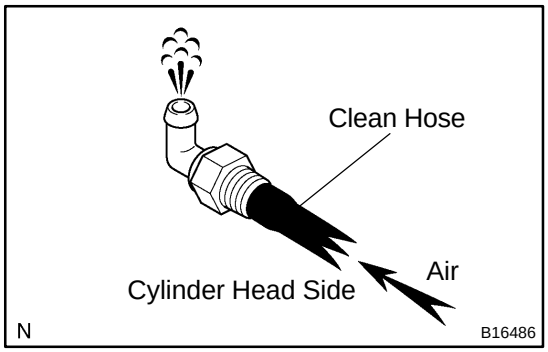

(b) Install a clean hose to the PCV valve.

(c) Inspect the PCV valve operation.

(1) Blow air into the cylinder head side, and check that air passes through easily.

CAUTION:

Do not suck air through the valve. Petroleum substances inside the valve are harmful.

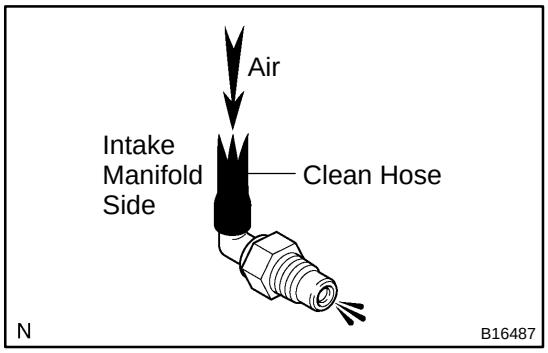

(2) Blow air into the intake manifold side, and check that air passes through with difficulty.

If operation is not as specified, replace the PCV valve.

(d) Remove the clean hose from the PCV valve.

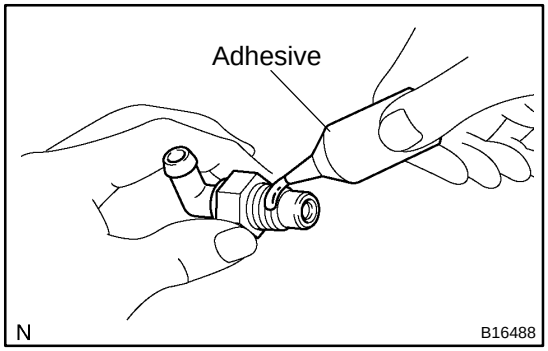

(e) Reinstall the PCV valve.

(1) Apply adhesive to 2 or 3 threads.

Adhesive:

Part No. 08833−00070, THREE BOND 1324 or equivalent

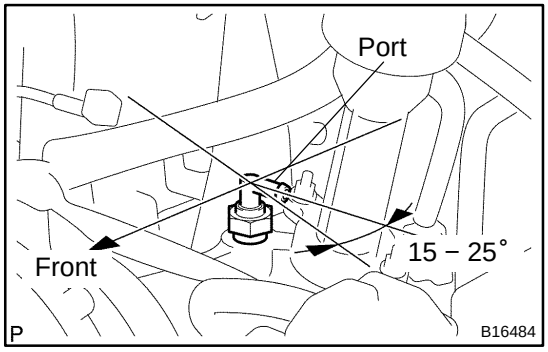

(2) Reinstall the PCV valve.

Torque: 27 N·m (275 kgf·cm,20 ft·lbf)

HINT:

After applying the specified torque, rotate the PCV valve clockwise with the port faced in the direction indicated in the illustration.

(3) Install the PCV valve cover to the PCV valve.

(4) Connect the PCV hose to the PCV valve.

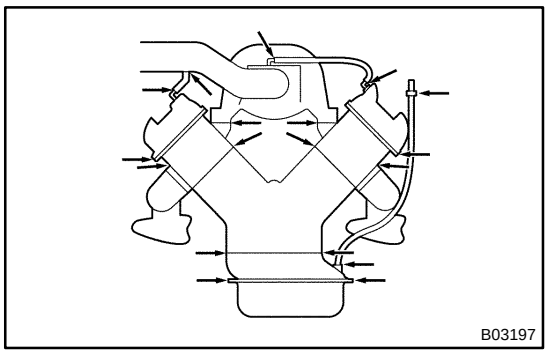

3. INSPECT HOSES, CONNECTIONS AND GASKETS

Visually for cracks, leaks or damage.

4. REINSTALL V−BANK COVER

EC089−07

DRAWING

EVAPORATIVE EMISSION (EVAP) CONTROL SYSTEM

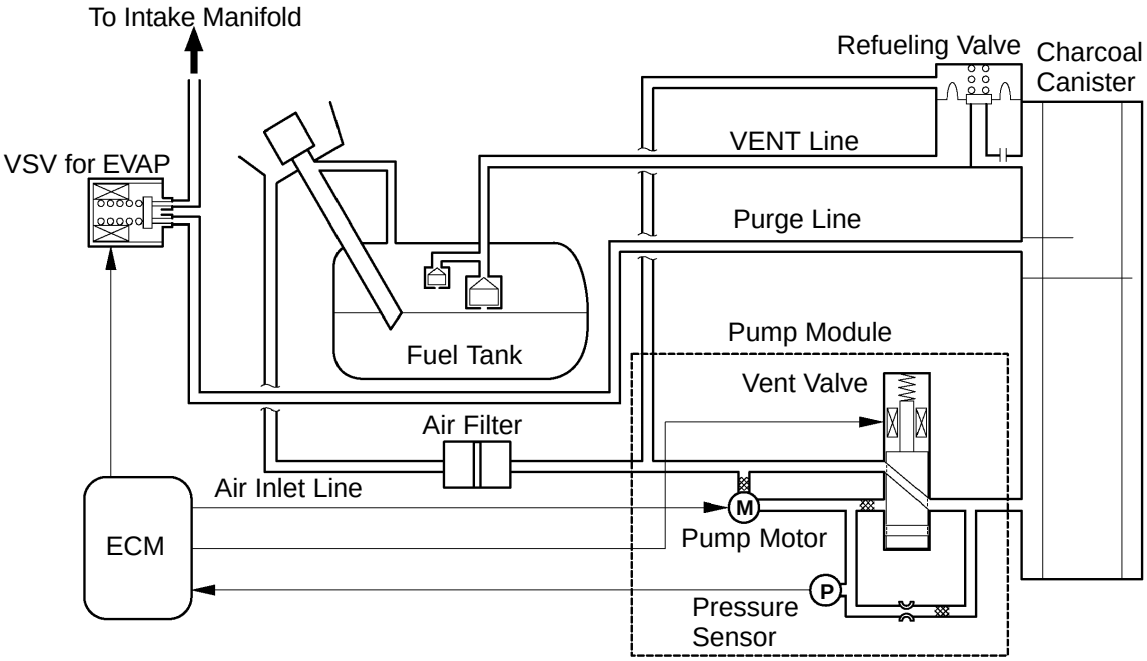

SECONDARY AIR INJECTION SYSTEM

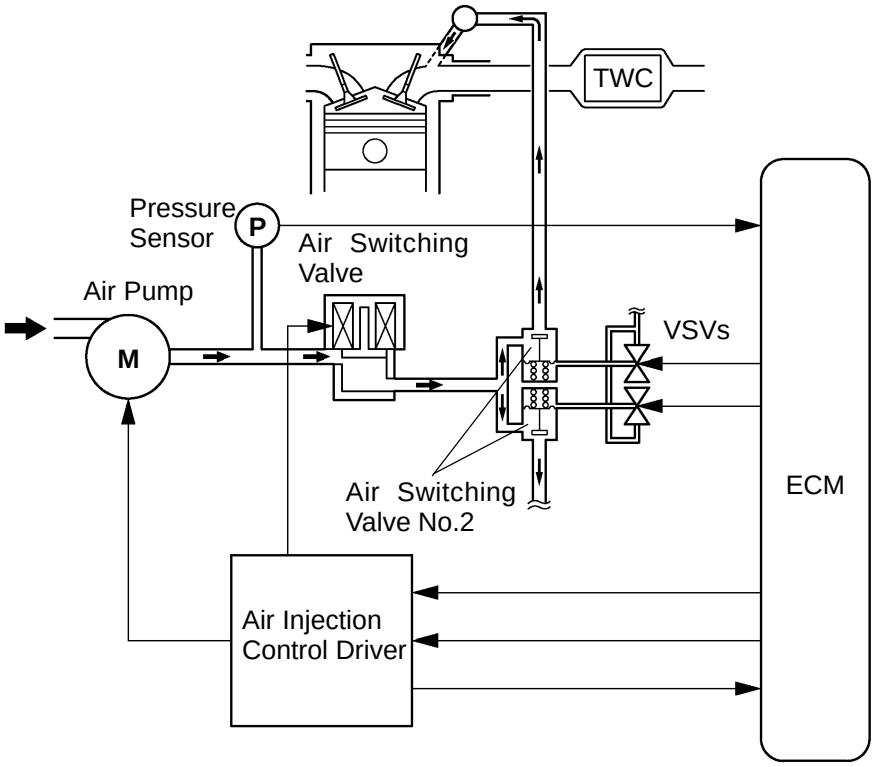

Y

cmc0682

PARTS LAYOUT AND SCHEMATIC DRAWING

LOCATION

EC0NO−02

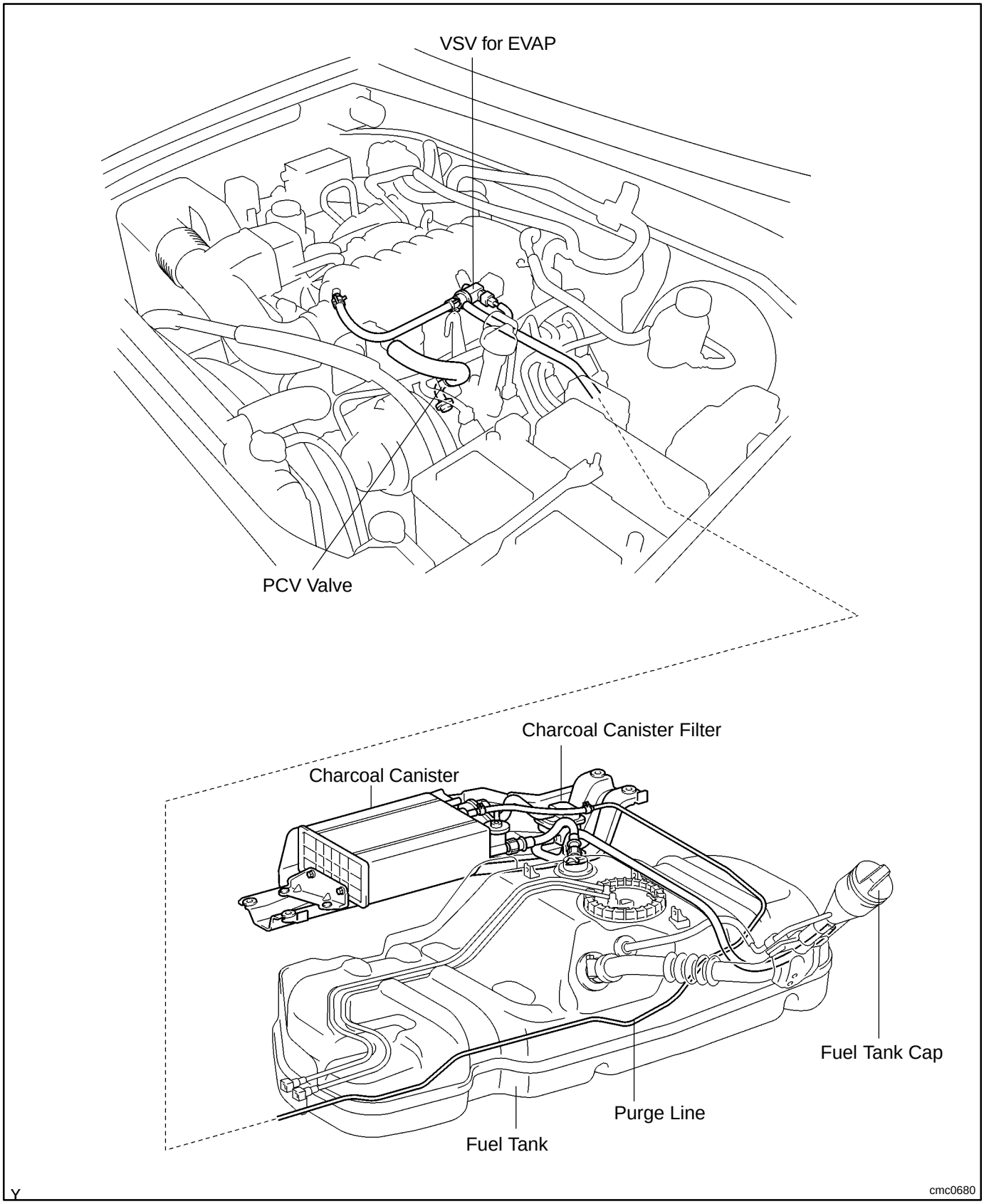

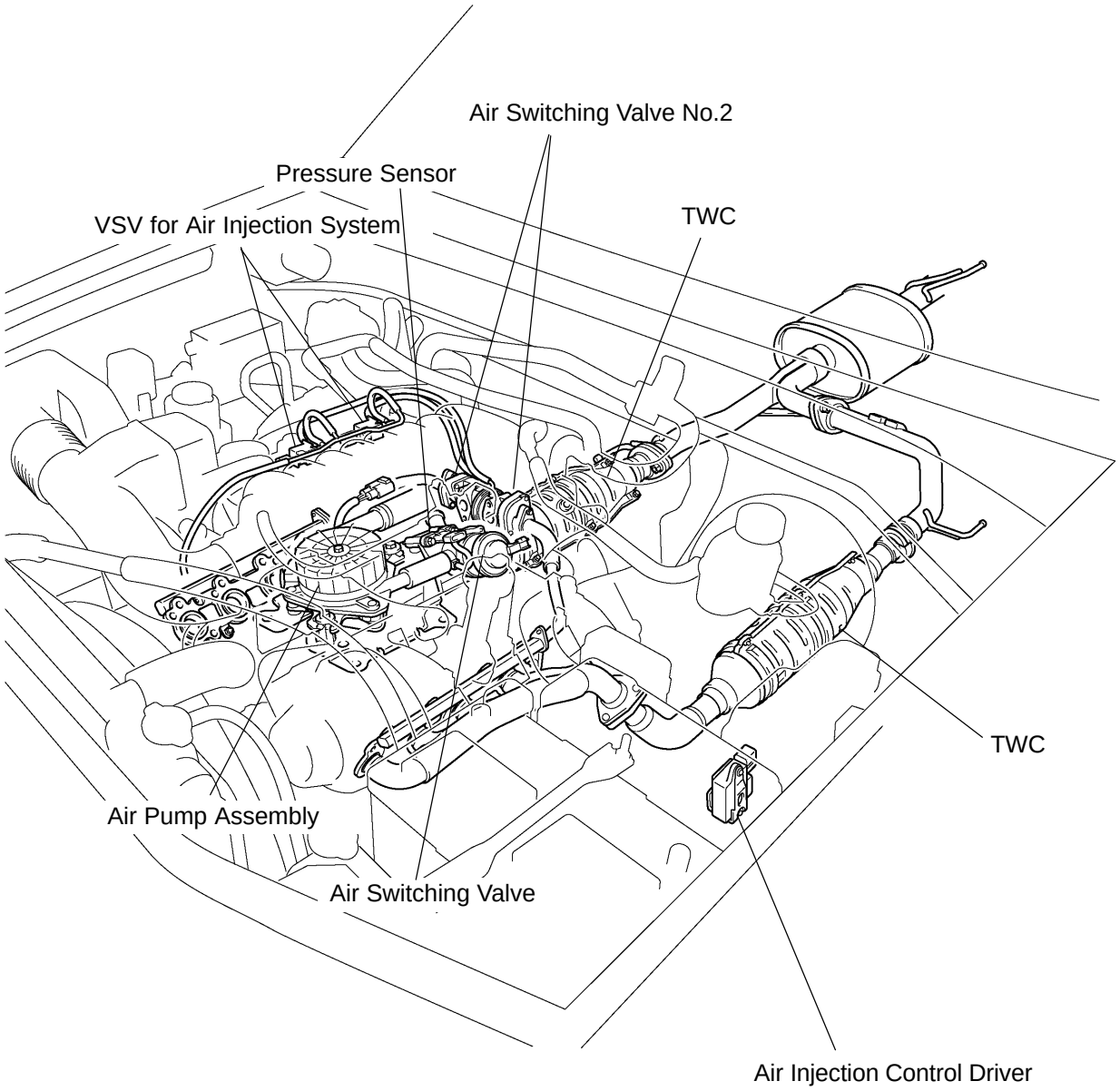
Air Switching Valve No.2
Pressure Sensor
VSV for Air Injection System
TWC
TWC
Air Pump Assembly
Air Switching Valve
Air Injection Control Driver

Y

B17722

EC0NZ−02

COMPONENTS

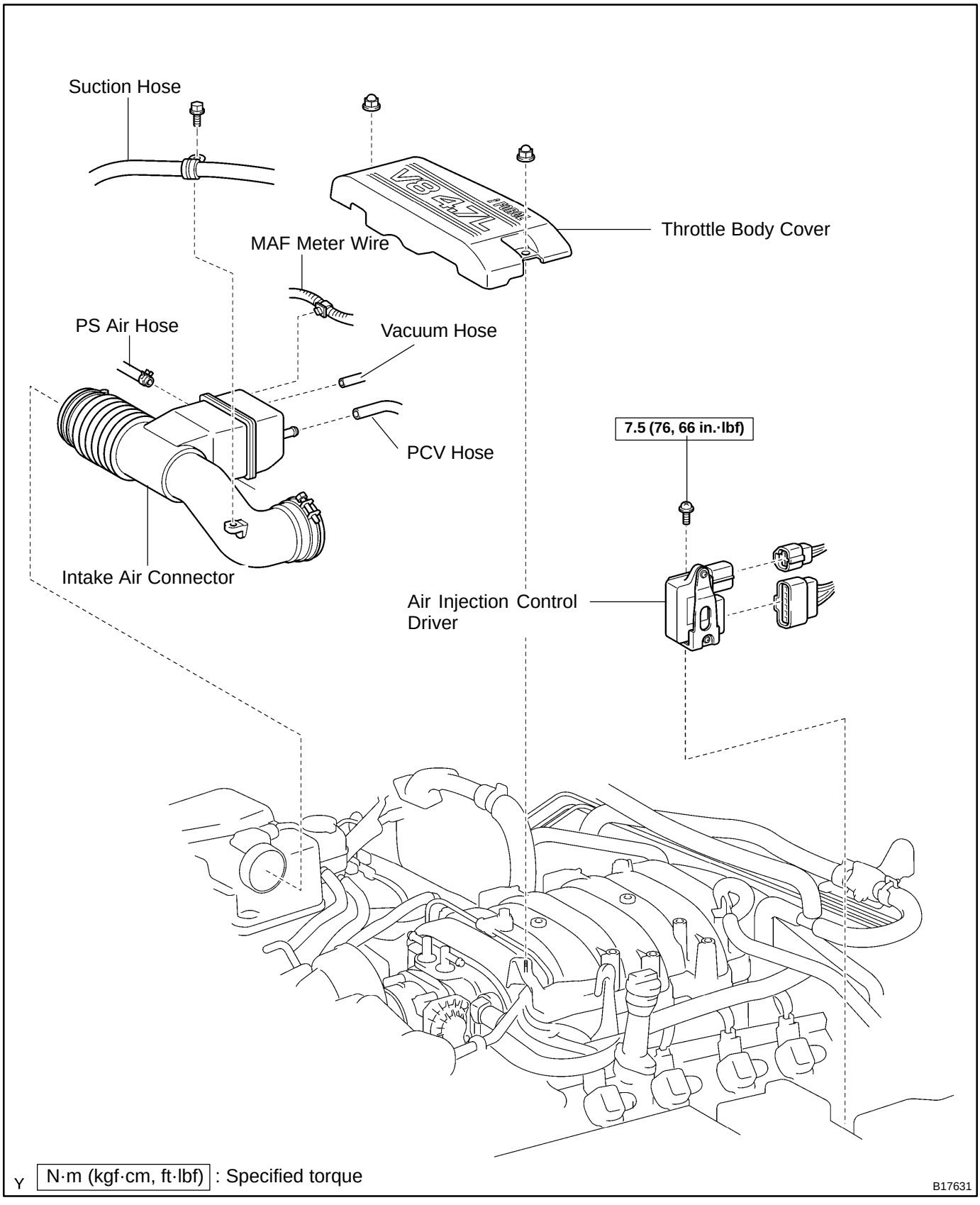

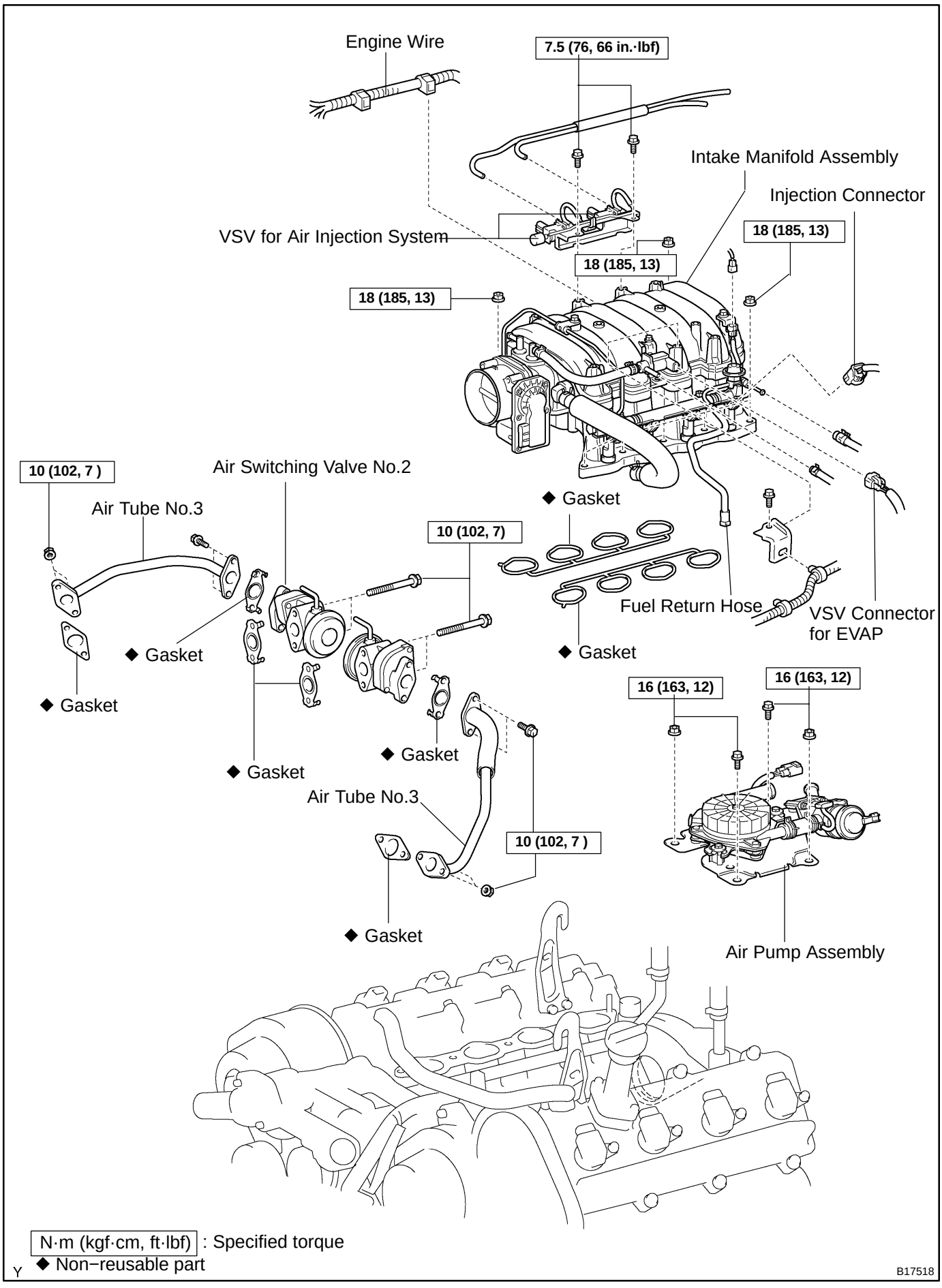

N·m (kgf·cm, ft·lbf) : Specified torque
◆ Non−reusable part

Y

B17518

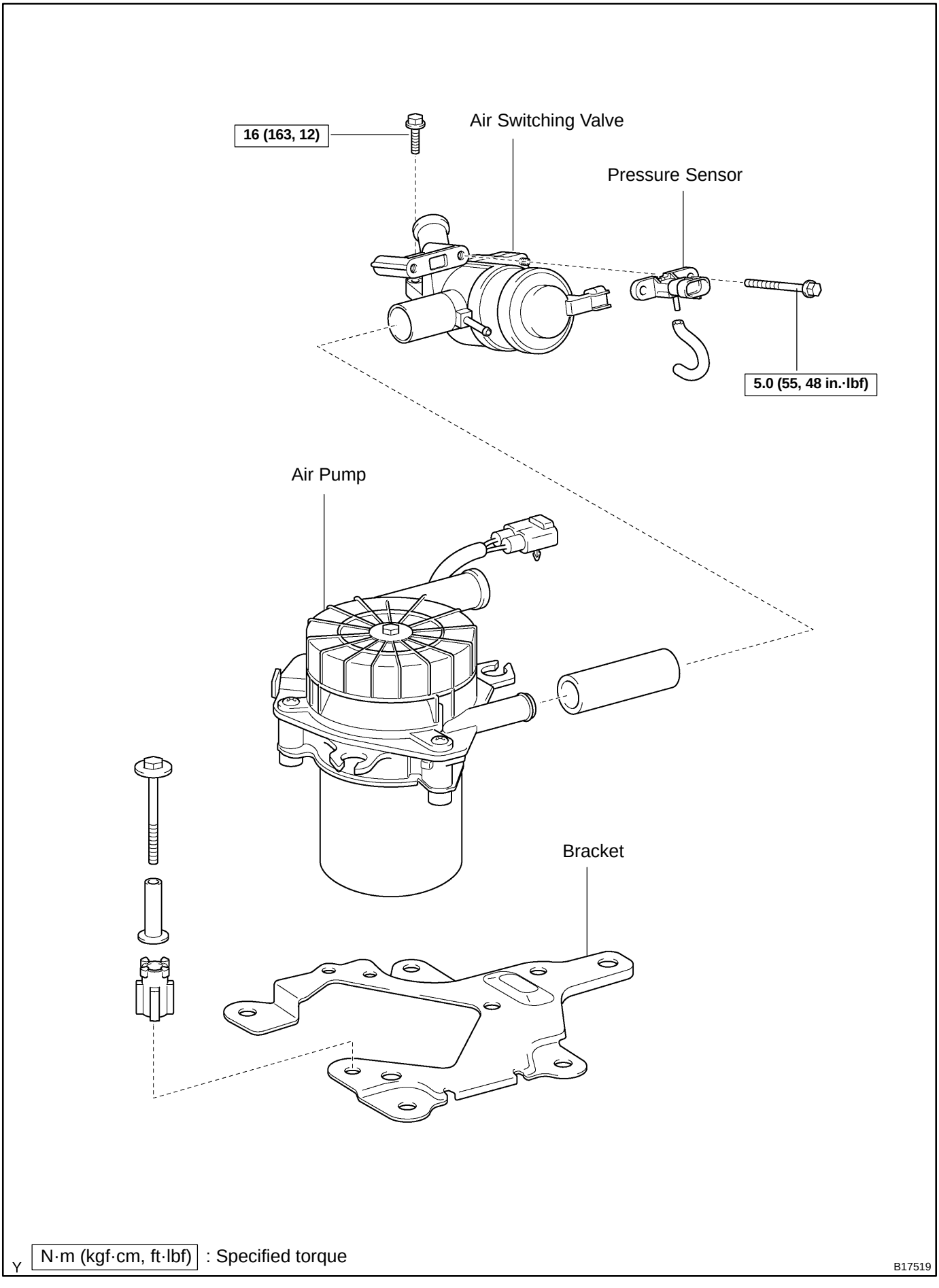
16 (163, 12)
Air Switching Valve
Pressure Sensor
5.0 (55, 48 in.·lbf)
Air Pump
Bracket
Y N·m (kgf·cm, ft·lbf) : Specified torque
B17519

EC0O1−01

DISASSEMBLY

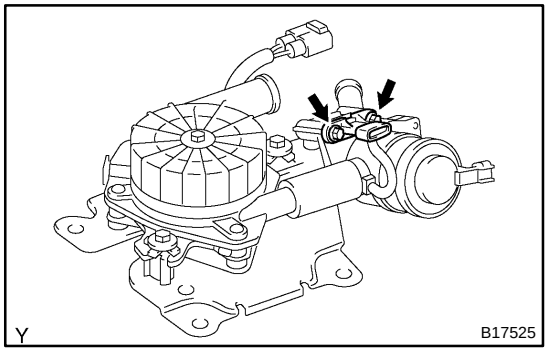

1. REMOVE PRESSURE SENSOR

(a) Remove the vacuum hose from the pressure sensor and air switching valve.

(b) Remove the 2 bolts and pressure sensor from the air switching valve.

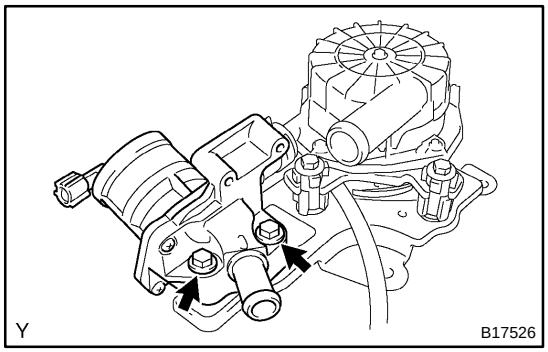

2. REMOVE AIR SWITCHING VALVE

(a) Remove the 2 bolts and air switching valve from the air pump bracket.

(b) Remove the No.1 air hose from the air switching valve and air pump.

EC0O2−01

INSPECTION

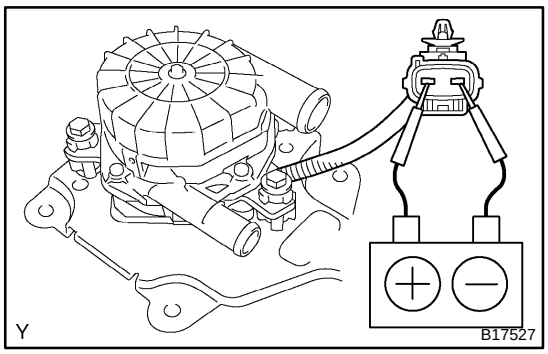

1. INSPECT AIR PUMP

(a) Connect the positive (+) lead from the battery to terminal 1 and negative (−) lead to terminal 2, and check that air flows.

If operation is not as specified, replace the air pump.

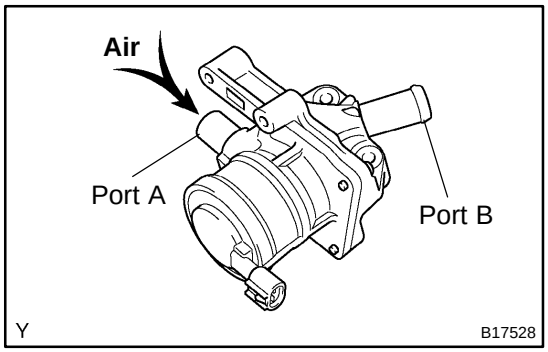

2. INSPECT AIR SWITCHING VALVE

(a) Blow air into port A and check that air is not discharged from port B.

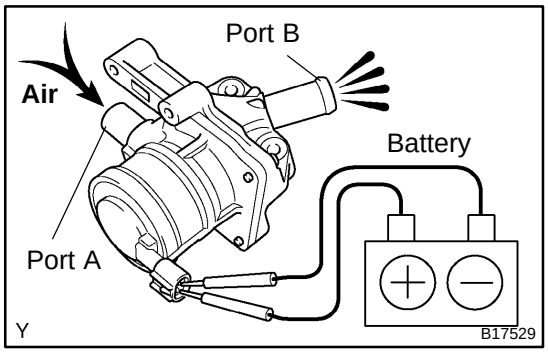

(b) Apply positive battery between the terminals.

(c) Blow air into port A and check that air is discharged from port B.

If operation is not as specified, replace the air switching valve.

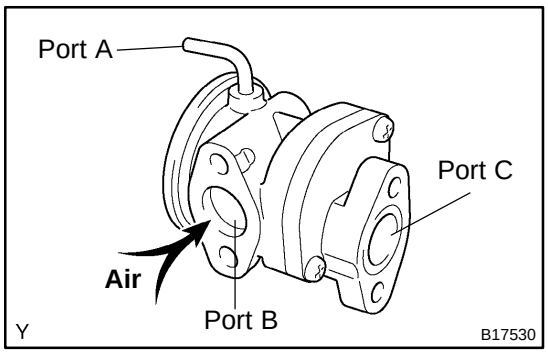

3. INSPECT NO. 2 AIR SWITCHING VALVE

(a) Blow air into port B and check that air is not discharged from port C.

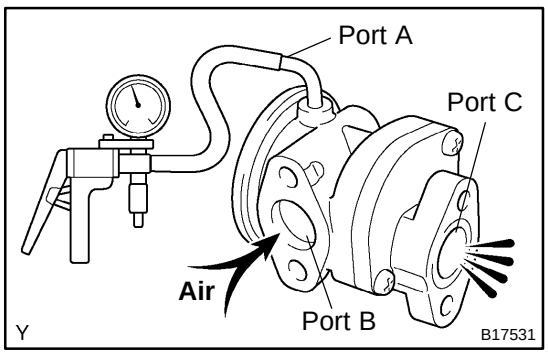

(b) Apply vacuum (30 kPa (306 gf/cm^2, 4.35 psi) to port A, blow air into port B and check that air is discharged from port C.

If operation is not as specified, replace the No.2 air switching valve.

EC0O4−02

INSTALLATION

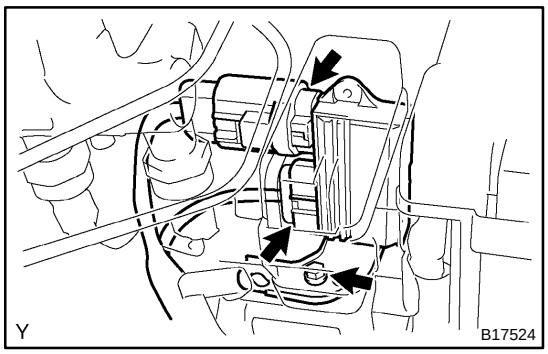

1. INSTALL AIR INJECTION CONTROL DRIVER

(a) Install the air injection control driver with the 2 bolts to the body.
Torque: 18 N·m (184 kgf·cm, 13 ft·lbf)

(b) Connect the 2 connectors to the air injection control driver.

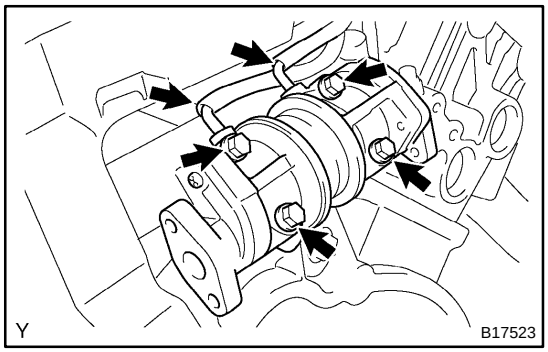

2. INSTALL NO. 2 AIR SWITCHING VALVE

(a) Connect the 2 vacuum hoses to the No.2 air switching valves.

(b) Install 2 new gaskets and 2 No.2 air switching valves with the 4 bolts to the rear water by−pass joint.
Torque: 10 N·m (102 kgf·cm, 7 ft·lbf)

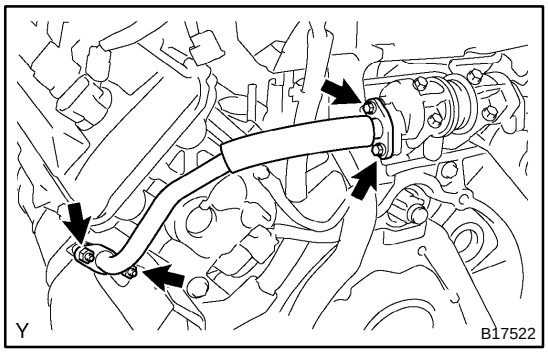

(c) Install 2 new gaskets, and connect the 2 No.3 air tubes with the 4 bolts to the No.2 air switching valve.
Torque: 10 N·m (102 kgf·cm, 7 ft·lbf)

(d) Install the 2 new gaskets, and connect the 2 No.3 air tubes with the 4 nuts to the exhaust manifold.
Torque: 10 N·m (102 kgf·cm, 7 ft·lbf)

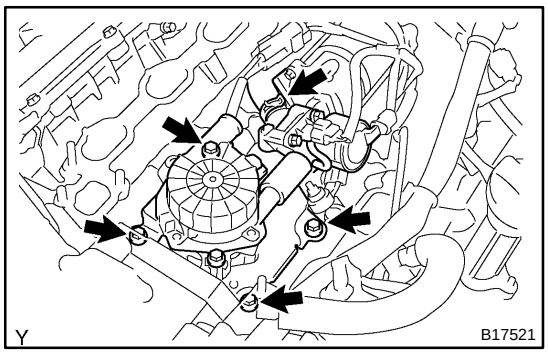

3. INSTALL AIR PUMP ASSEMBLY

(a) Install the air pump assembly with the 4 bolts.
Torque: 16 N·m (163 kgf·cm, 12 ft·lbf)

(b) Connect the pressure sensor connector for the air injection system.

(c) Connect the air switching valve connector.

(d) Connect the air hose No.2 to the air switching valve.

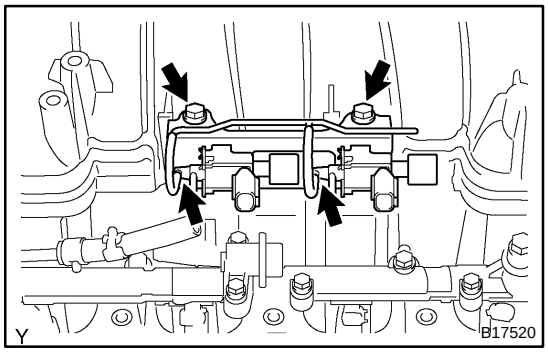

4. INSTALL VSV FOR AIR INJECTION SYSTEM

(a) Install the 2 VSVs with the 2 bolts to the intake manifold.
Torque: 7.5 N·m (76 kgf·cm, 66 in.·lbf)

(b) Connect the 2 vacuum hoses to the 2 VSVs.

5. INSTALL INTAKE MANIFOLD (See page EM−60)

6. INSTALL THROTTLE BODY COVER

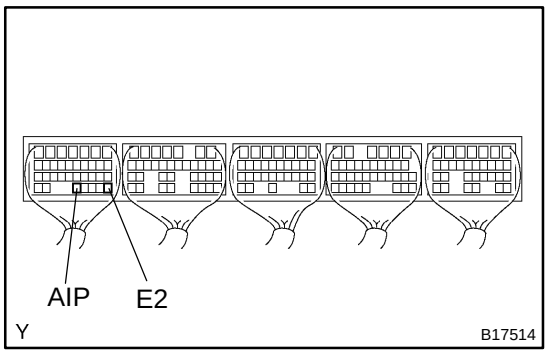

SECONDARY AIR INJECTION SYSTEM

EC0NY−02

ON−VEHICLE INSPECTION

1. INSPECT PRESSURE SENSOR

(a) Turn the ignition switch to the ON position.

(b) Measure the voltage between terminals AIP and E2 of the ECM connector.

Voltage: 1.0 to 2.2 V

If the voltage is not as specified, replace the pressure sensor.

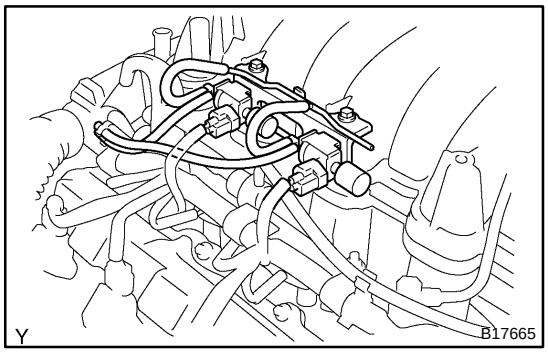

2. INSPECT VSV FOR AIR INJECTION SYSTEM

(a) Disconnect the connector from the VSV.

(b) Disconnect the 2 vacuum hoses from the VSV.

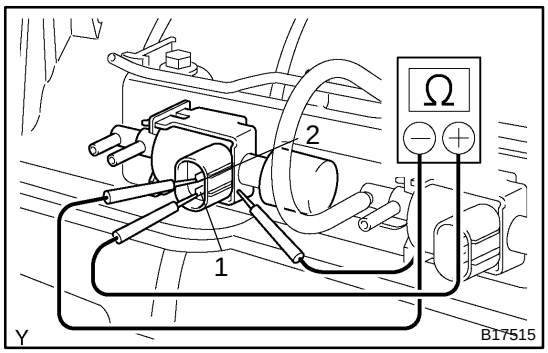

(c) Using an ohmmeter, measure the resistance between the terminals.

Standard:

Tester Connection	Specified Condition
1 − 2	33 to 39 Ω at 20°C (68°F)
1 − Body ground	10 MΩ or higher
2 − Body ground	10 MΩ or higher

If the resistance is not as specified, replace the VSV.

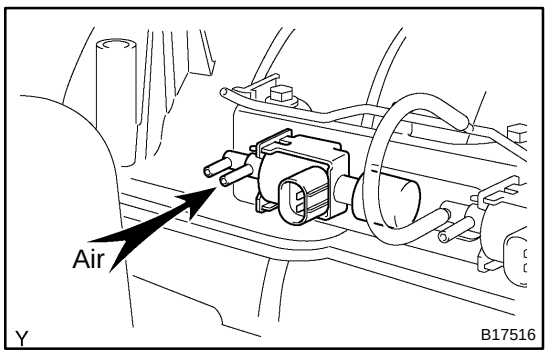

(d) Check that air does not flow from the port as shown in the illustration.

If the result is not as specified, replace the VSV.

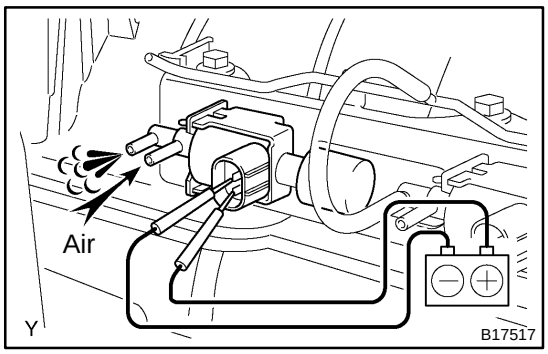

(e) Apply positive battery between the terminals, check that air flows from the ports.

If the result is not as specified, replace the VSV.

(f) Connect the 2 vacuum hoses to the VSV.

NOTICE:

Be sure to connect the vacuum hoses correctly.

(g) Connect the connector to the VSV.

(h) Perform procedures (a) to (g) to the other VSV.

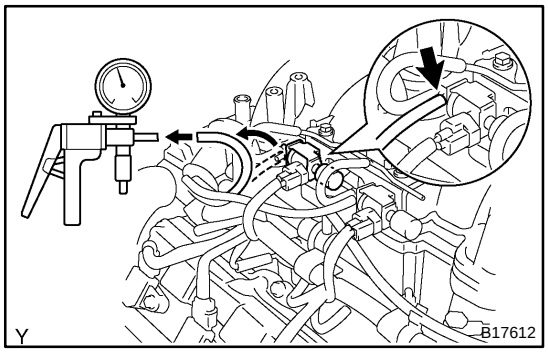

3. INSPECT NO. 2 AIR SWITCHING VALVE

(a) Disconnect the vacuum hose from the VSV for the air injection system.

(b) Apply vacuum (30 kPa (306 gf/cm^2, 4.35 psi) to vacuum hose, check that the vacuum does not decrease.

If operation is not as specified, replace the No.2 air switching valve.

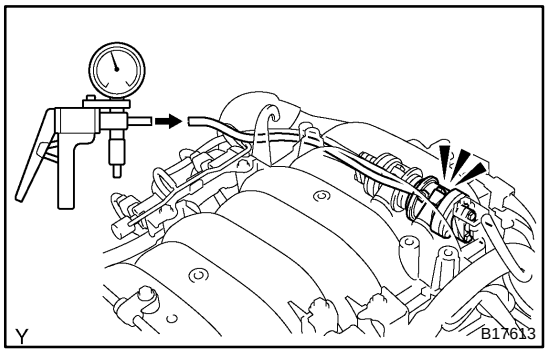

(c) Release the vacuum, and check that the operation sound is emited from the No.2 air switching valve.

If operation is not as specified, replace the No.2 air switching valve.

(d) Perform procedures (a) to (c) to the other No.2 air seitching valve.

EC0O3−01

REASSEMBLY

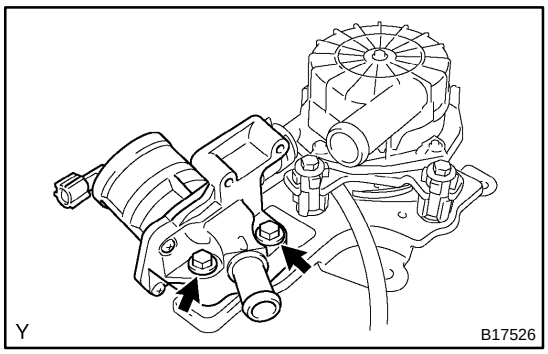

1. INSTALL AIR SWITCHING VALVE

(a) Install the No.1 air hose to the air switching valve and air pump.

(b) Install the air switching valve with the 2 bolts to the air pump bracket.
Torque: 16 N·m (163 kgf·cm, 12 ft·lbf)

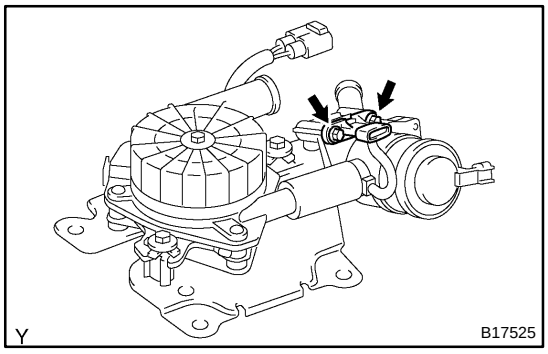

2. INSTALL PRESSURE SENSOR

(a) Install the pressure sensor with the 2 bolts to the air switching valve.
Torque: 5.0 N·m (55 kgf·cm, 48 in.·lbf)

(b) Install the vacuum hose to the pressure sensor and air switching valve.

EC0O0−02

REMOVAL

1. REMOVE THROTTLE BODY COVER

2. REMOVE INTAKE MANIFOLD (See page EM−36)

3. REMOVE VSV FOR AIR INJECTION SYSTEM

(a) Remove the 2 bolts and 2 VSVs from the intake manifold.

(b) Remove the 2 vacuum hoses from the 2 VSVs.

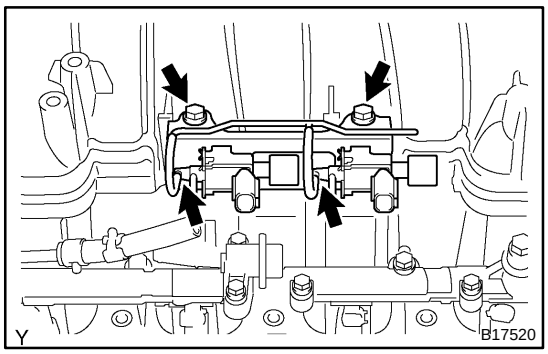

4. REMOVE AIR PUMP ASSEMBLY

(a) Disconnect the air hose No.2 from the air switching valve.

(b) Disconnect the air switching valve connector.

(c) Disconnect the pressure sensor connector for the air injection system.

(d) Remove the 4 bolts and air pump assembly.

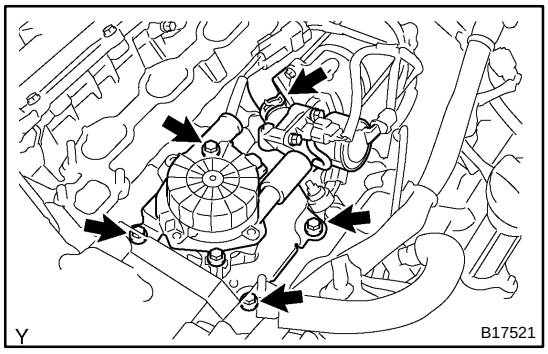

5. REMOVE NO. 2 AIR SWITCHING VALVE

(a) Remove the 4 nuts and 2 gaskets, and disconnect the 2 No.3 air tubes from the exhaust manifolds.

(b) Remove the 4 bolts, 2 gaskets and the 2 No.3 air tubes from the 2 No.2 air switching valves.

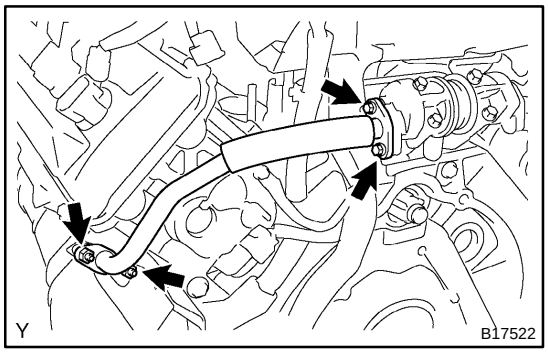

(c) Remove the 4 bolts, 2 gaskets and the 2 No.2 air switching valves from the rear water by−pass joint.

(d) Remove the 2 vacuum hoses from the No.2 air switching valves.

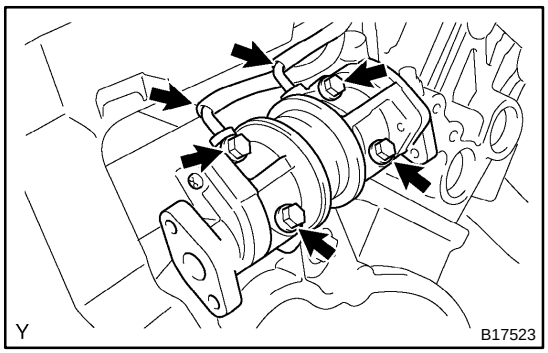

6. REMOVE AIR INJECTION CONTROL DRIVER

(a) Disconnect the 2 connectors from the air injection control driver.

(b) Remove the 2 bolts and air injection control driver from the body.

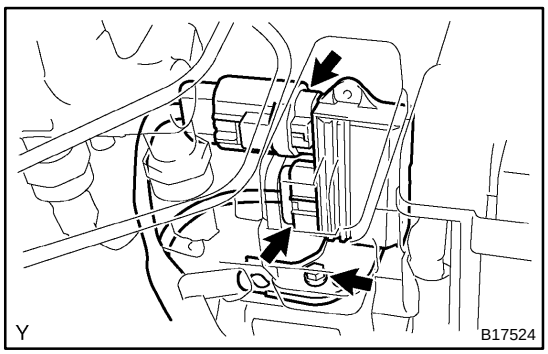

EC08C−06

COMPONENTS

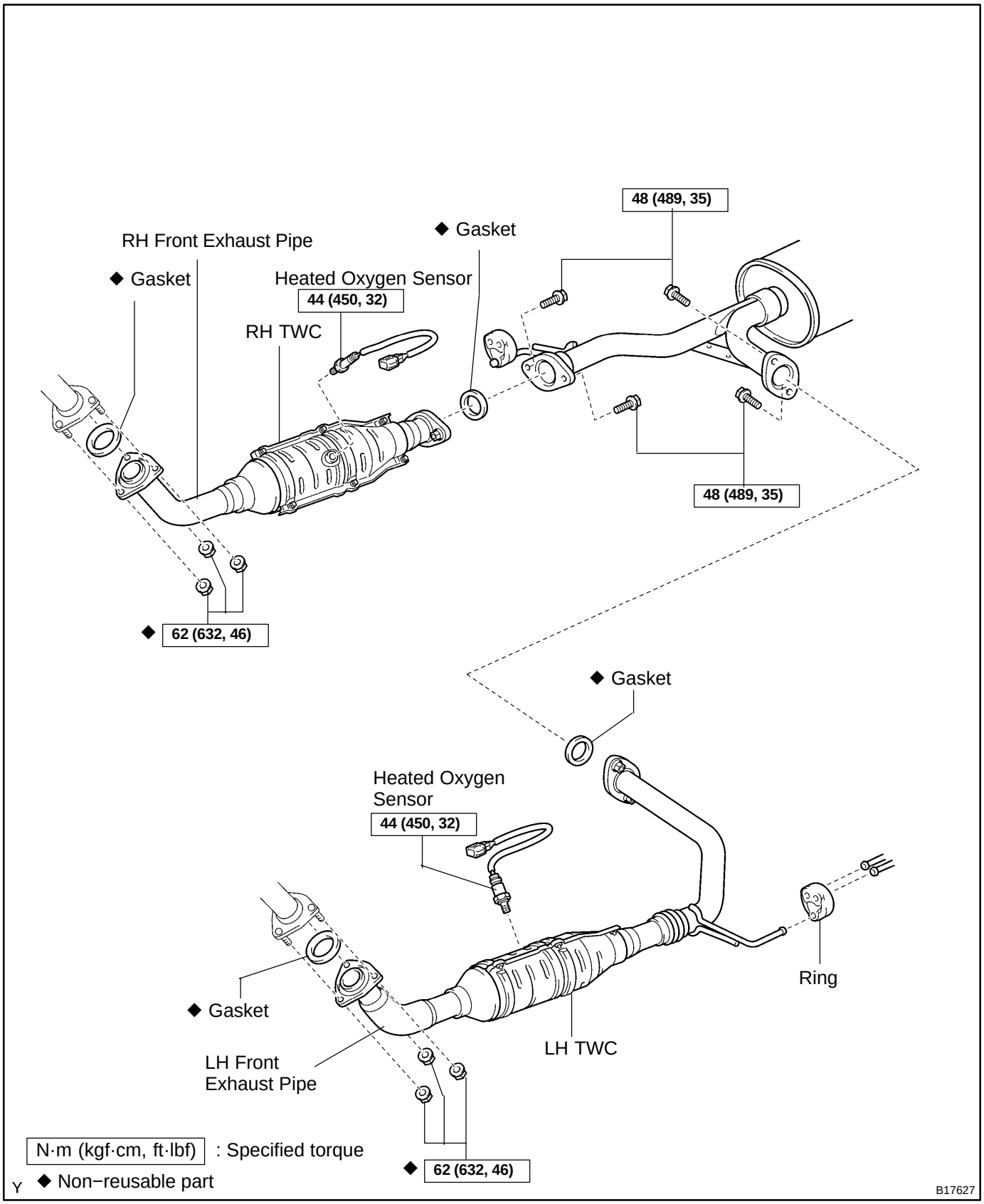

THREE−WAY CATALYTIC CONVERTER (TWC) SYSTEM

EC0JM−02

ON−VEHICLE INSPECTION

1. CHECK EXHAUST PIPE ASSEMBLY

(a) Check the connections for looseness or damage.

(b) Check the clamps for weakness, cracks or damage.

2. INSPECT TWC

Check for dents or damage.

If any part of protector is damaged or dented to the extent that it contacts the TWC, repair or replace it.

3. INSPECT HEAT INSULATOR

(a) Check the heat insulator for damage.

(b) Check for adequate clearance between the TWC and heat insulator.

EC0O5−01

REPLACEMENT

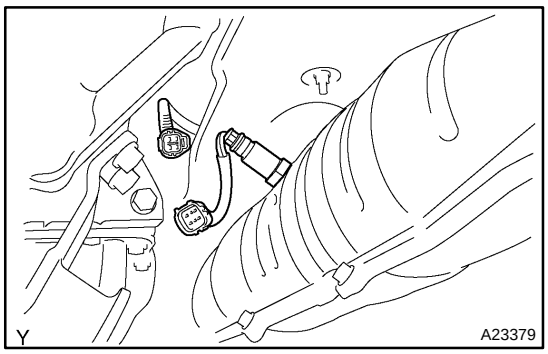

1. REMOVE HEATED OXYGEN SENSOR (BANK 1)

(a) Disconnect the heated oxygen sensor.

(b) Remove the heated oxygen sensor.

2. REMOVE HEATED OXYGEN SENSOR(BANK2)

(a) Disconnect the heated oxygen sensor connector.

(b) Remove the heated oxygen sensor.

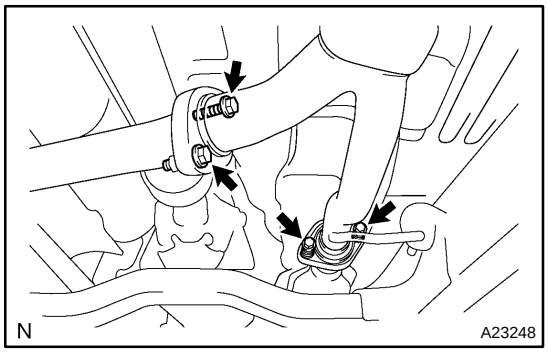

3. SEPARATE EXHAUST CENTER PIPE

Remove the 4 bolts and 2 gasket from the exhaust center pipe.

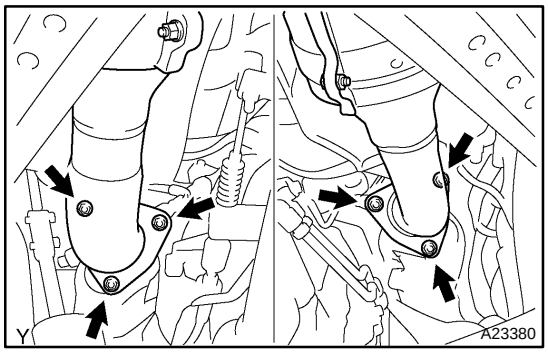

4. REMOVE RH FRONT EXHAUST PIPE

(a) Remove the 3 nuts and RH front exhaust pipe.

(b) Remove the gasket from the RH front exhaust pipe.

5. REMOVE LH FRONT EXHAUST PIPE

(a) Remove the 3 nuts and LH front exhaust pipe.

(b) Remove the gasket from the LH front exhaust pipe.

6. INSTALL LH FRONT EXHAUST PIPE

(a) Install a new gasket to the LH front exhaust pipe.

(b) Install the LH front exhaust pipe with 3 new nuts.

Torque: 62 N·m (630 kgf·cm, 46 ft·lbf)

7. INSTALL RH FRONT EXHAUST PIPE

(a) Install a new gasket to the RH front exhaust pipe.

(b) Install the RH front exhaust pipe with 3 new nuts.

Torque: 62 N·m (630 kgf·cm, 46 ft·lbf)

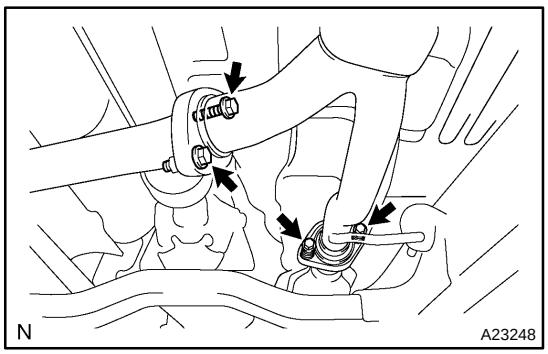

8. CONNECT EXHAUST CENTER PIPE

Install the 4 bolts.

Torque: 48 N·m (489 kgf·cm, 35 ft·lbf)

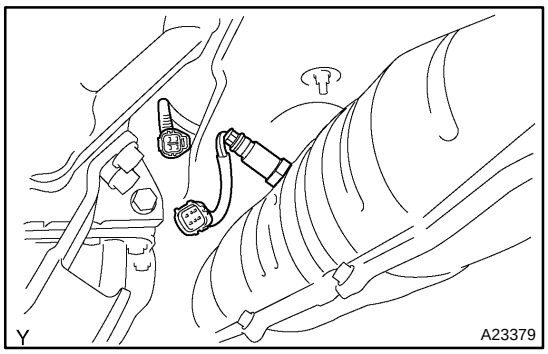

9. INSTALL HEATED OXYGEN SENSOR (BANK2)

(a) Install the heated oxygen sensor.
Torque: 44 N·m (450 kgf·cm, 33 ft·lbf)

(b) Connect the heated oxygen sensor connector.

10. INSTALL HEATED OXYGEN SENSOR (BANK1)

(a) Install the heated oxygen sensor.
Torque: 44 N·m (450 kgf·cm, 33 ft·lbf)

(b) Connect the heated oxygen sensor connector.

CO/HC

INSPECTION

EM0KQ−10

HINT:

This check is used only to determine whether or not the idle CO/HC complies with regulations.

1. INITIAL CONDITIONS

(a) Engine at normal operating temperature
(b) Air cleaner installed
(c) All pipes and hoses of air induction system connected
(d) All accessories switched OFF
(e) All vacuum lines properly connected
(f) SFI system wiring connectors fully plugged
(g) Correct ignition timing
(h) Transmission in neutral position
(i) Tachometer and CO/HC meter calibrated by hand

2. START ENGINE

3. RACE ENGINE AT 2,500 RPM FOR APPROX. 180 SECONDS

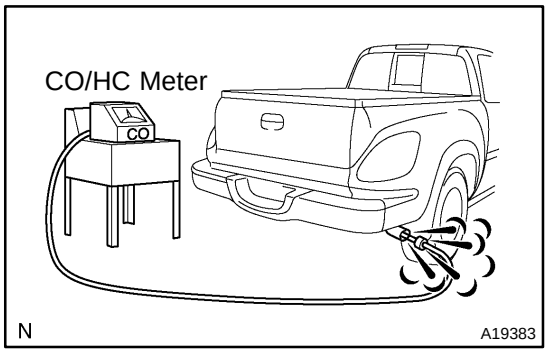

4. INSERT CO/HC METER TESTING PROBE AT LEAST 40 cm (1.3 ft) INTO TAILPIPE DURING IDLING

5. IMMEDIATELY CHECK CO/HC CONCENTRATION AT IDLE AND/OR 2,500 RPM

HINT:

When performing the 2 mode (2,500 rpm and idle) test, follow the measurement orders prescribed by the applicable local regulations.

If the CO/HC concentration does not comply with regulations, perform troubleshooting in the order given below.

(1) Check the A/F sensors and heated oxygen sensors operation (See page DI−84 and DI−90).

(2) See the table below for possible causes, and then inspect and correct the corresponding causes if necessary.

CO	HC	Problems	Causes
Normal	High	Rough idle	1. Faulty ignitions: • Incorrect timing • Fouled, shorted or improperly gapped plugs 2. Incorrect valve clearance 3. Leaky intake and exhaust valves 4. Leaky cylinders
Low	High	Rough idle (fluctuating HC reading)	1. Vacuum leaks: • PCV hose • Intake manifold • Throttle body 2. Lean mixture causing misfire
High	High	Rough idle (Black smoke from exhaust)	1. Restricted air filter 2. Faulty SFI system: • Faulty pressure regulator • Defective ECT sensor • Faulty ECM • Faulty injectors • Faulty throttle position sensor • Faulty MAF meter

COMPRESSION

EM06C−06

INSPECTION

HINT:

If there is a lack of power, excessive oil consumption or poor fuel economy, measure the compression pressure.

1. WARM UP AND STOP ENGINE

Allow the engine to warm up to normal operating temperature.

2. REMOVE SPARK PLUGS

(a) Remove the V−bank cover.
(b) Remove the air cleaner.
(c) Remove the intake air surge tank (See page EM−62).
(d) Remove the 6 ignition coils.
(e) Remove the 6 spark plugs.
(f) Disconnect the 6 injector connectors.

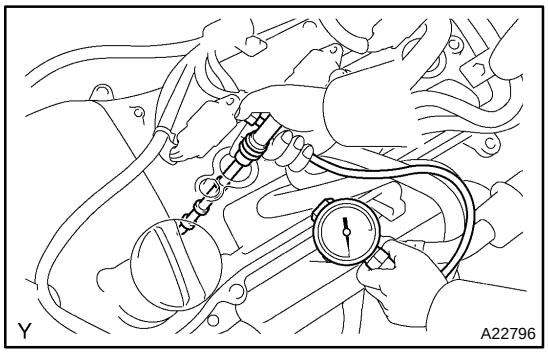

3. CHECK CYLINDER COMPRESSION PRESSURE

(a) Insert a compression gauge into the spark plug hole.
(b) Fully open the throttle.
(c) While cranking the engine, measure the compression pressure.

HINT:

Always use a fully charged battery to obtain an engine speed of 250 rpm or more.

(d) Repeat steps (a) through (c) for each cylinder.

NOTICE:

This measurement must be done in the shortest possible time.

Compression pressure:
1.3 MPa (13.3 kgf/cm^2, 189 psi) or more
Minimum pressure: 1.0 MPa (10.2 kgf/cm^2, 145 psi)
Difference between each cylinder:
0.1 MPa (1.0 kgf/cm^2, 15 psi) or less

(e) If the cylinder compression pressure in 1 or more cylinders is low, pour a small amount of engine oil into the cylinder through the spark plug hole and repeat steps (a) through (c) for cylinders with low compression pressure.
- If adding oil improves the compression pressure, it is likely that the piston rings and/or cylinder bore are worn or damaged.
- If compression pressure stays low, a valve may be sticking, seating may be improper, or there may be a leak past the gasket.

4. REINSTALL SPARK PLUGS

(a) Connect the 6 injector connectors.
(b) Install the 6 spark plugs.
Torque: 20 N·m (200 kgf·cm, 15 ft·lbf)
(c) Install the 6 ignition coils.
(d) Install the intake air surge tank (See page EM−89).
(e) Install the air cleaner.
(f) Install the V−bank cover.

CYLINDER BLOCK

COMPONENTS

EM1XY−01

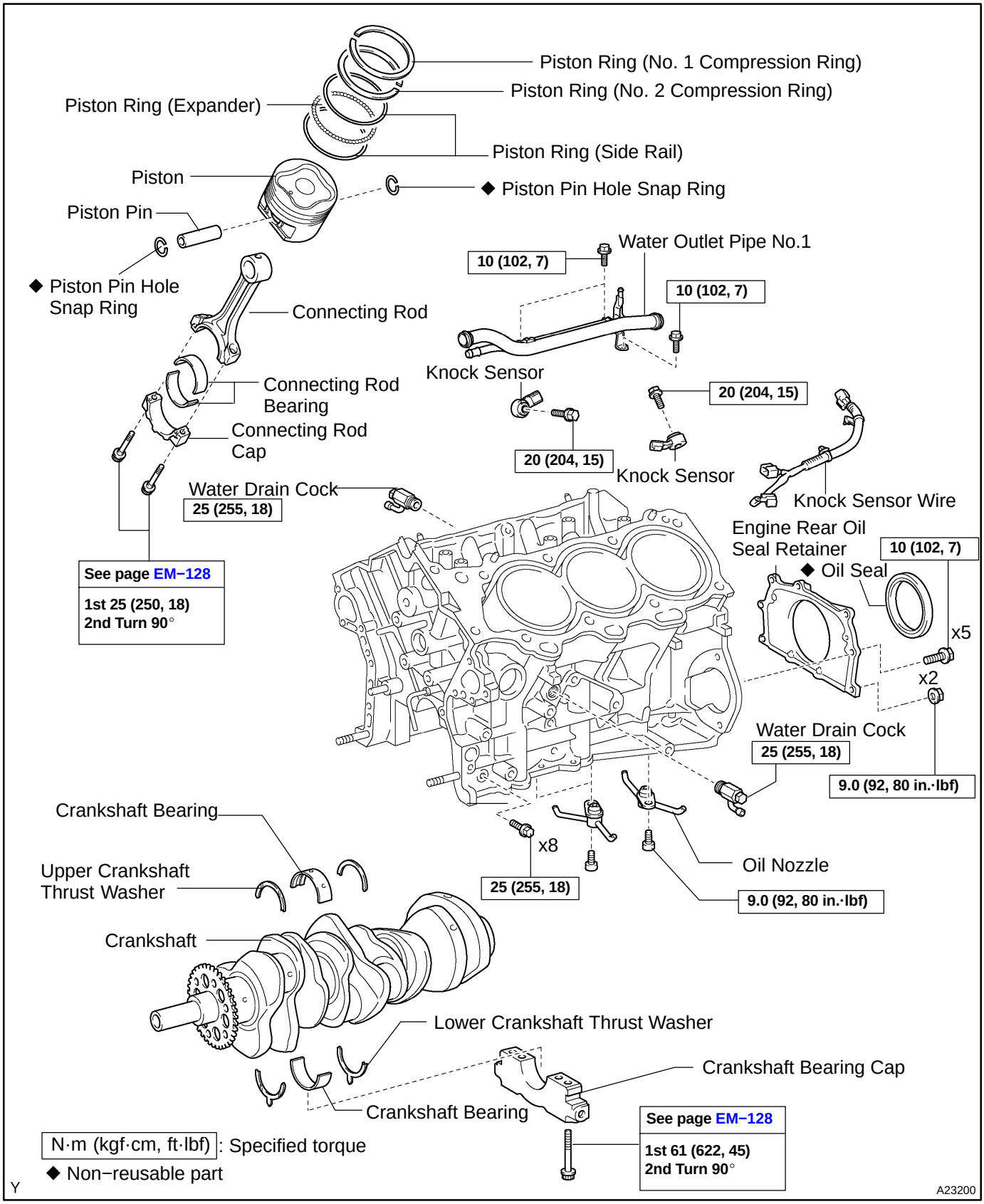

EM1XZ−01

DISASSEMBLY

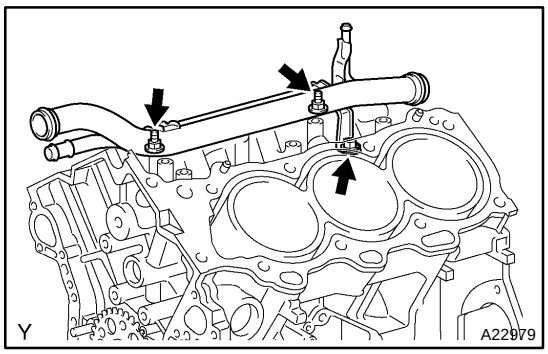

1. REMOVE WATER OUTLET PIPE NO.1

(a) Separate the knock sensor wire.

(b) Remove the 3 bolts and water outlet pipe.

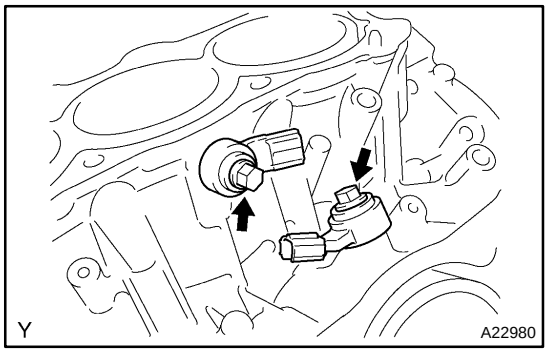

2. REMOVE KNOCK SENSOR

(a) Disconnect the knock sensor connectors.

(b) Remove the 2 bolts and 2 knock sensors.

3. REMOVE WATER DRAIN COCK

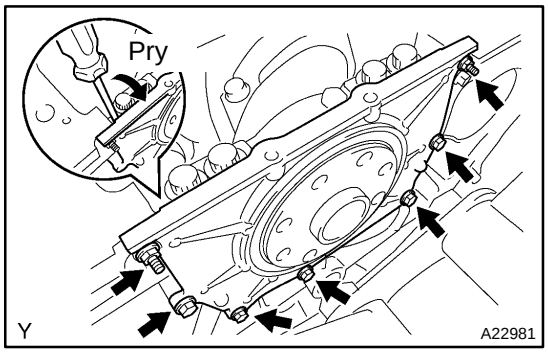

4. REMOVE ENGINE REAR OIL SEAL RETAINER

(a) Remove the 5 bolts and 2 nuts.

(b) Using a screwdriver, remove the oil seal retainer by prying between the oil seal retainer and crankshaft bearing cap.

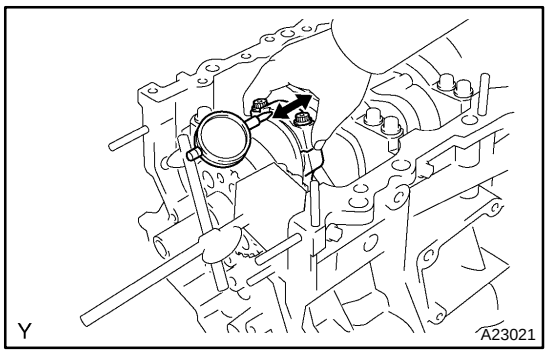

5. INSPECT CONNECTING ROD THRUST CLEARANCE

Using a dial indicator, measure the thrust clearance while moving the connecting rod back and forth.

Standard thrust clearance:
0.15 to 0.30 mm (0.0059 to 0.0118 in.)
Maximum thrust clearance: 0.35 mm (0.0138 in.)

6. INSPECT CONNECTING ROD OIL CLEARANCE

(a) Check that the matchmarks on the connecting rod and cap are aligned to ensure correct reassembling.

(b) Using SST, remove the 2 connecting rod cap bolts.
SST 09011−38121

(c) Clean the crank pin, bearing and connecting rod.

(d) Check the crank pin and bearing for pits and scratches.

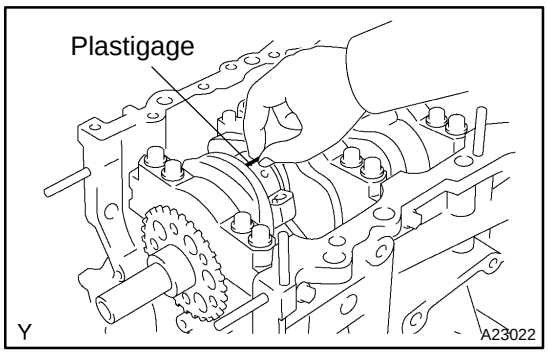

(e) Lay a strip of Plastigage across the crank pin.

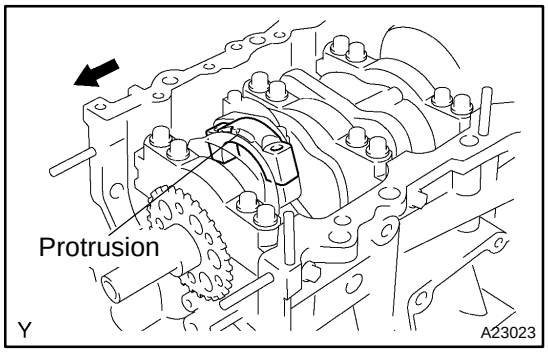

(f) Check that the protrusion of the connecting rod cap is facing the correct direction.

(g) Apply a light coat of engine oil to the threads of the connecting rod cap bolts.

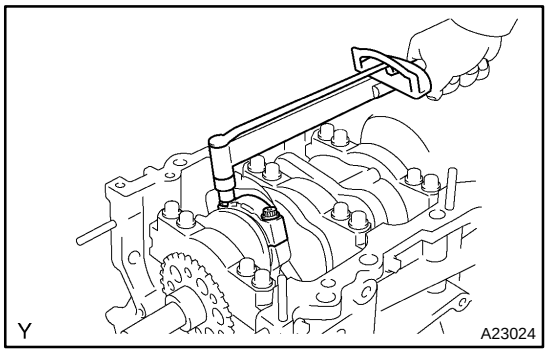

(h) Using SST, tighten the bolts alternately to the specified torque.

SST 09011−38121

Torque: 25 N·m (250 kgf·cm, 18 ft·lbf)

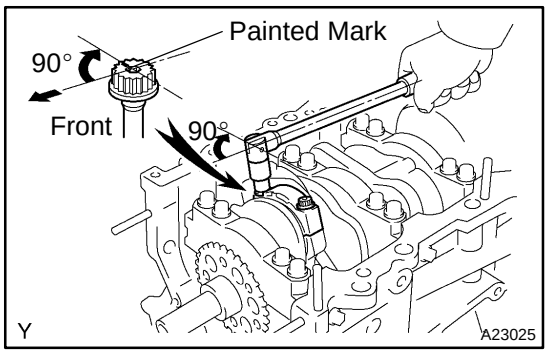

(i) Mark the front side of each connecting cap bolt with paint.

(j) Retighten the cap bolts 90° as shown in the illustration.

NOTICE:

Do not turn the crankshaft.

(k) Remove the 2 bolts, connecting rod cap and lower bearing.

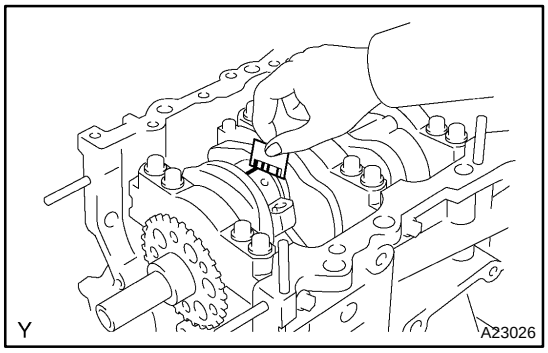

(l) Measure the Plastigage at its widest point.

Standard oil clearance:

0.026 to 0.046 mm (0.0010 to 0.0018 in.)

Maximum oil clearance: 0.066 mm (0.0025 in.)

NOTICE:

Completely remove the Plastigage.

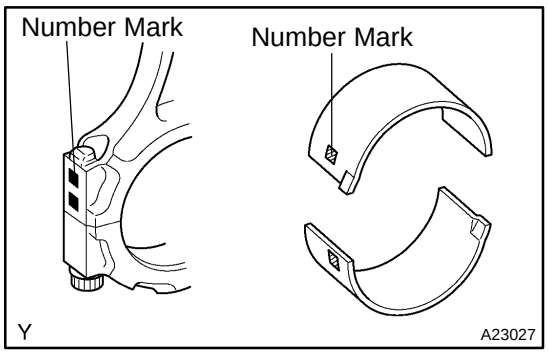

(m) If replacing a bearing, replace it with one that has the same number marked on the connecting rod. There are 4 sizes of standard bearings, marked ”1 ”, ”2”, ”3” and ”4” accordingly.

HINT:

Standard bearing center wall thickness

Mark	mm (in.)
”1”	1.484 to 1.487 (0.0584 to 0.0585)
”2”	1.487 to 1.490 (0.0585 to 0.0587)
”3”	1.490 to 1.493 (0.0587 to 0.0588)
”4”	1.493 to 1.496 (0.0588 to 0.0589)

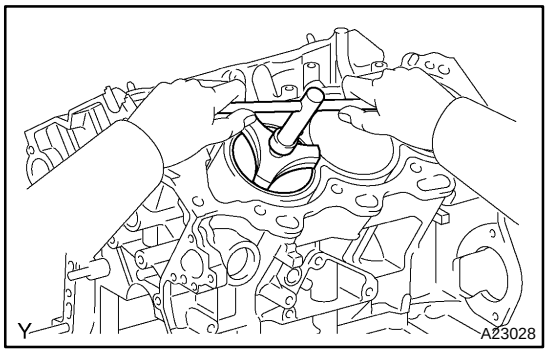

7. REMOVE PISTON W/CONNECTING ROD

(a) Using a ridge reamer, remove all the carbon from the top of the cylinder.

(b) Push in the piston w/ connecting rod and upper bearing through the top of the cylinder block.

HINT:

- Keep the bearings, connecting rod and cap together.
- Arrange the piston and connecting rod assemblies in the correct order.

8. REMOVE CONNECTING ROD BEARING

9. REMOVE PISTON RING SET

(a) Using a piston ring expander, remove the 2 compression rings.

(b) Remove the 2 side rails and oil ring by hand.

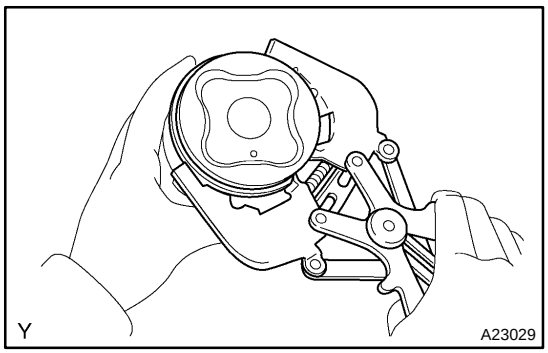

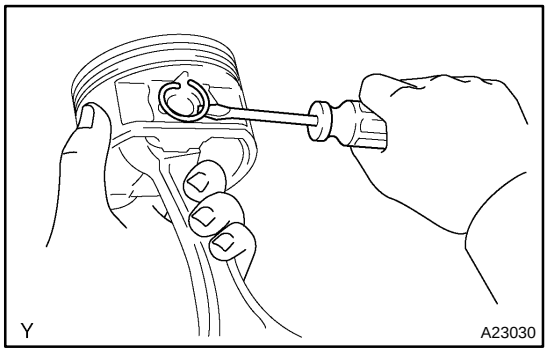

10. REMOVE PISTON PIN HOLE SNAP RING

Using a screwdriver, pry out the 2 snap rings.

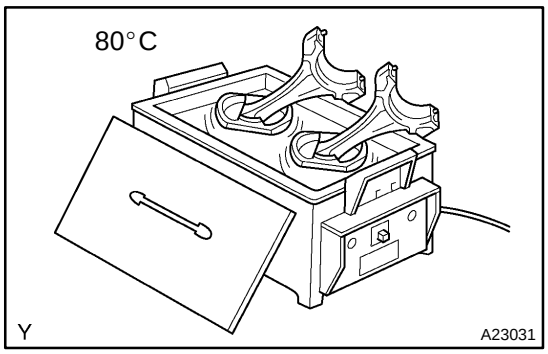

11. REMOVE PISTON PIN

(a) Gradually heat the piston to approx. 80°C (176°F).

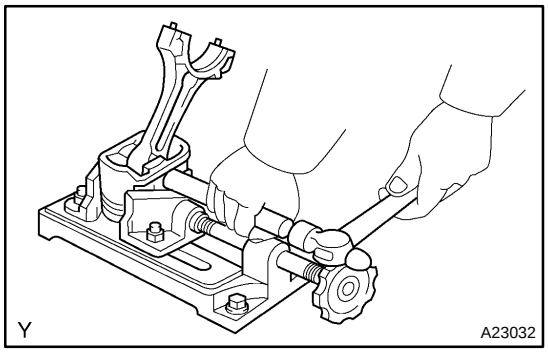

(b) Using a plastic−faced hammer and brass bar, lightly tap out the piston pin and remove the connecting rod.

HINT:

- The piston and pin are a matched set.
- Arrange the pistons, pins, rings, connecting rods and bearings in the correct order.

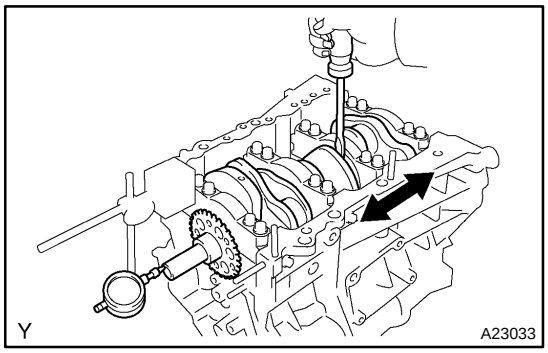

12. INSPECT CRANKSHAFT THRUST CLEARANCE

(a) Using a dial indicator, measure the thrust clearance while prying the crankshaft back and forth with a screwdriver.

Standard thrust clearance:
0.04 to 0.24 mm (0.0016 to 0.0094 in.)
Maximum thrust clearance: 0.30 mm (0.0118 in.)

If the thrust clearance is greater than the maximum, replace the pair of the thrust washers or the crankshaft.

HINT:

Thrust washer thickness is 1.93 to 1.98 mm (0.0760 to 0.0780 in.)

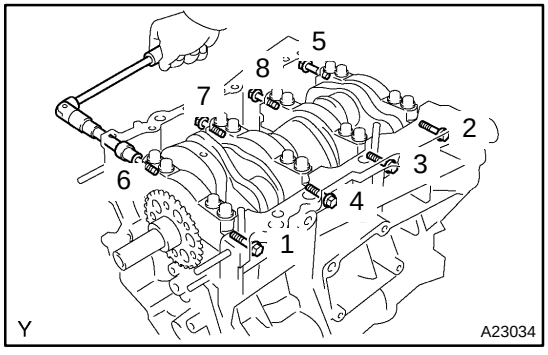

13. REMOVE CRANKSHAFT

(a) Using several steps, uniformly loosen and remove the 8 main bearing cap bolts and seal washers in the sequence as shown in the illustration.

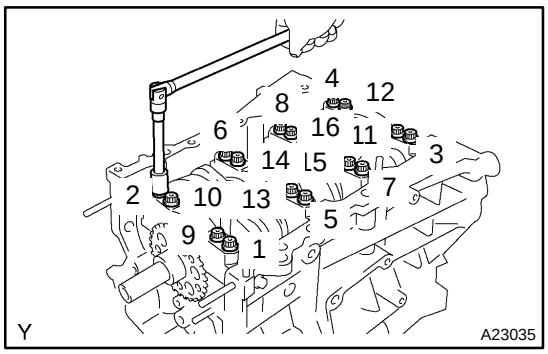

(b) Using several steps, uniformly loosen and remove the 16 main bearing cap bolts in the sequence as shown in the illustration.

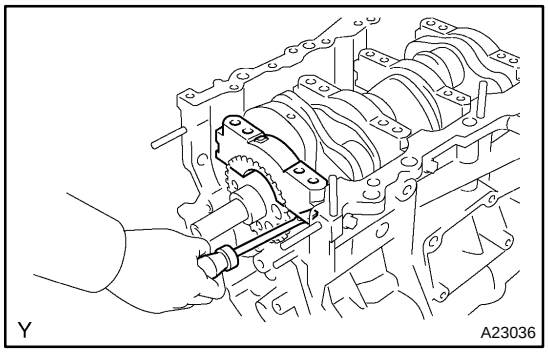

(c) Using a screwdriver, pry out the main bearing caps. Remove the 4 main bearing caps and lower bearings.

NOTICE:

- **Pull up the main bearing cap while turning it little by little to the right and the left.**

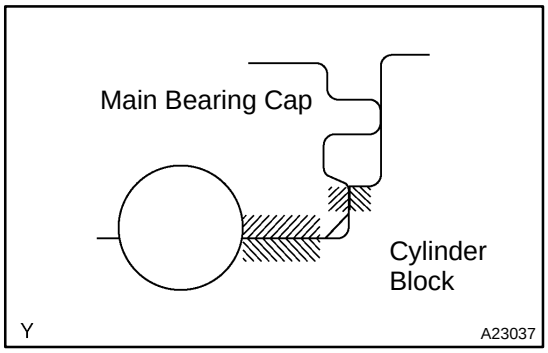

- **Be careful not to damage the joint surface of the cylinder block and the main bearing cap.**

14. REMOVE CRANKSHAFT THRUST WASTER SET

15. REMOVE CRANKSHAFT BEARING

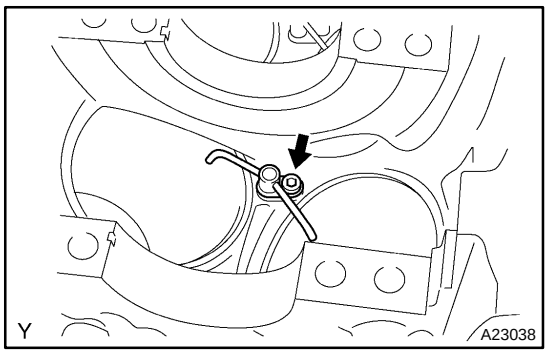

16. REMOVE OIL NOZZLE

Using a 5 mm socket hexagon wrench, remove the 3 oil nozzles.

EM1Y0−01

INSPECTION

1. INSPECT CYLINDER BLOCK FOR FLATNESS

Using a precision straight edge and feeler gauge, measure the flatness of the surface that is in contact with the cylinder head gasket.

Maximum warpage: 0.05 mm (0.0020 in.)

If warpage is greater than the maximum, replace the cylinder block.

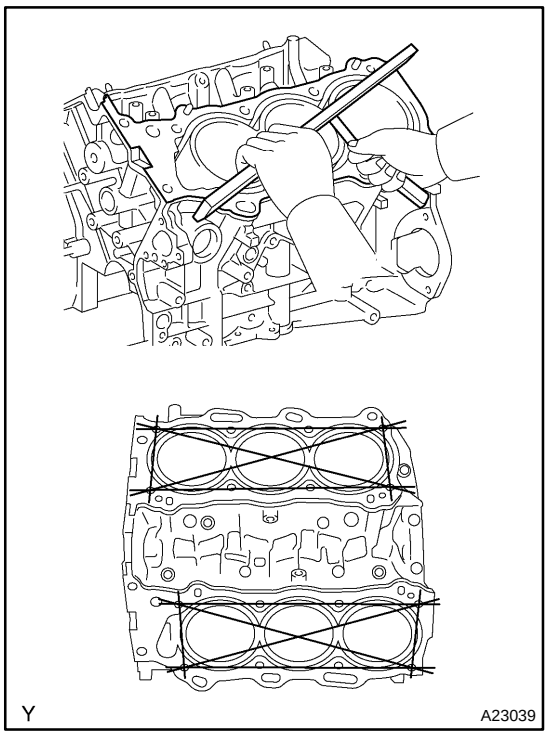

2. INSPECT CYLINDER BORE

Using a cylinder gauge, measure the cylinder bore diameter at positions A and B in the thrust and axial directions.

Standard diameter:
94.000 to 94.012 mm (3.7008 to 3.7013 in.)
Maximum diameter: 94.132mm (3.7060 in.)

If the average diameter of the 4 positions is greater than the maximum, replace the cylinder block.

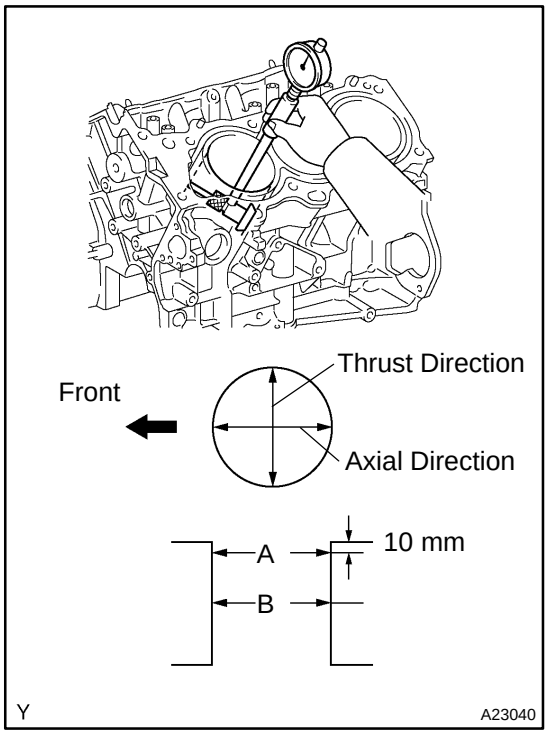

3. INSPECT PISTON

Using a micrometer, measure the piston diameter at right angles to the piston pin center line, 27.7 mm (1.091 in.) from the piston head.

Piston diameter:
93.910 to 93.940 mm (3.6972 to 3.6984 in.)

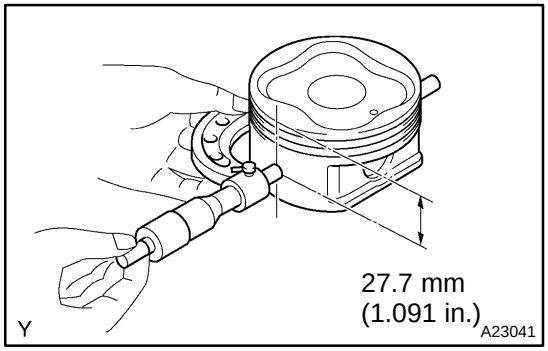

4. INSPECT PISTON OIL CLEARANCE

Subtract the piston diameter measurement from the cylinder bore diameter measurement.

Standard oil clearance:
0.060 to 0.102 mm (0.0024 to 0.0040 in.)
Maximum oil clearance: 0.13 mm (0.0051 in.)

If the oil clearance is greater than the maximum, replace all the 6 pistons. If necessary, replace the cylinder block.

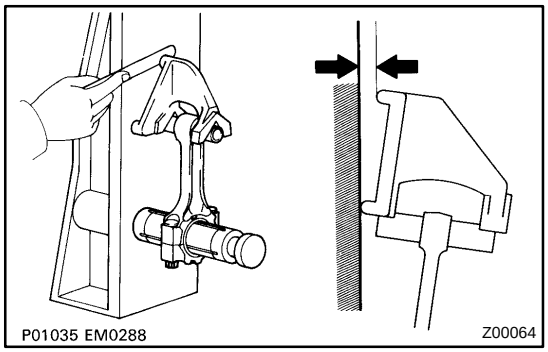

5. INSPECT CONNECTING ROD

Using a rod aligner and feeler gauge, check the connecting rod alignment.

(1) Check for misalignment.

Maximum misalignment:
0.05 mm (0.0020 in.) per 100 mm (3.94 in.)

If misalignment is greater than the maximum, replace the connecting rod assembly.

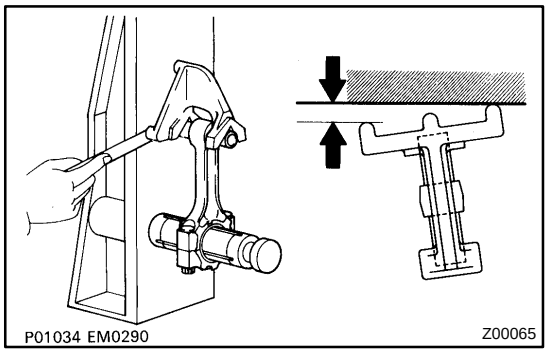

(2) Check twist.

Maximum twist:
0.15 mm (0.0059 in.) per 100 mm (3.94 in.)

If twist is greater than the maximum, replace the connecting rod assembly.

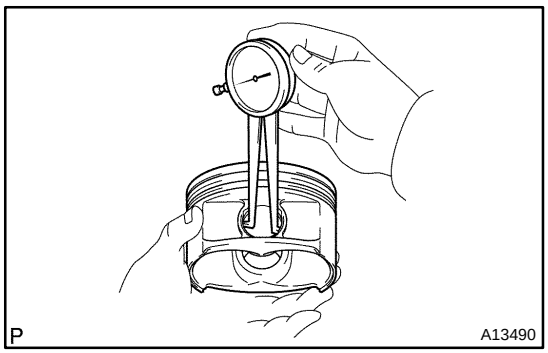

6. INSPECT PISTON PIN OIL CLEARANCE

(a) Using a caliper gauge, measure the inside diameter of the piston pin hole.

Piston pin hole inside diameter:
22.001 to 22.010 mm (0.8662 to 0.8665 in.)

HINT:

Piston pin hole inside diameter

Mark	mm (in.)
A	22.001 to 22.004 (0.8662 to 0.8663)
B	22.005 to 22.007 (0.8663 to 0.8664)
C	22.008 to 22.010 (0.8665 to 0.8665)

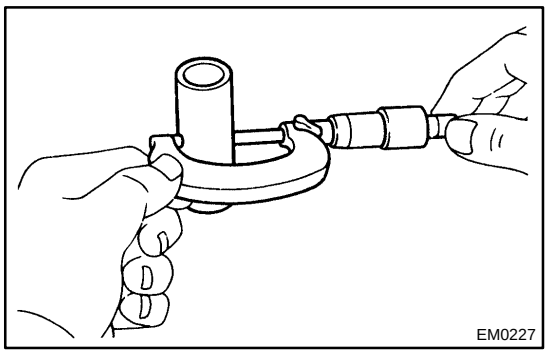

(b) Using a micrometer, measure the piston pin diameter.
Piston pin diameter:
21.997 to 22.006 mm (0.8660 to 0.8664 in.)

HINT:

Piston pin diameter

Mark	mm (in.)
A	21.997 to 22.000 (0.8660 to 0.8661)
B	22.001 to 22.003 (0.8661 to 0.8663)
C	22.004 to 22.006 (0.8663 to 0.8664)

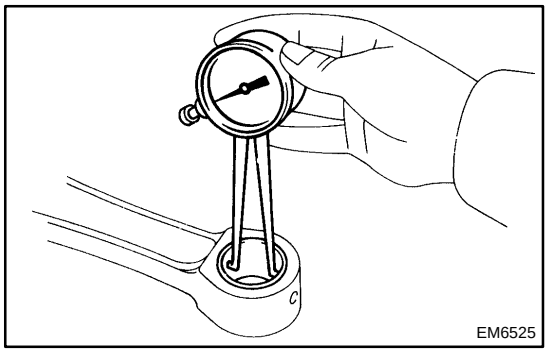

(c) Using a caliper gauge, measure the inside diameter of the connecting rod bushing.
Bushing inside diameter:
22.005 to 22.014 mm (0.8663 to 0.8667 in.)

HINT:

Bushing inside diameter

Mark	mm (in.)
A	22.005 to 22.008 (0.8663 to 0.8665)
B	22.009 to 22.011 (0.8665 to 0.8666)
C	22.012 to 22.014 (0.8666 to 0.8667)

(d) Subtract the piston pin diameter measurement from the piton pin hole diameter measurement.
Standard oil clearance:
0.001 to 0.007 mm (0.00004 to 0.00028 in.)
Maximum oil clearance: 0.040 mm (0.0016 in.)

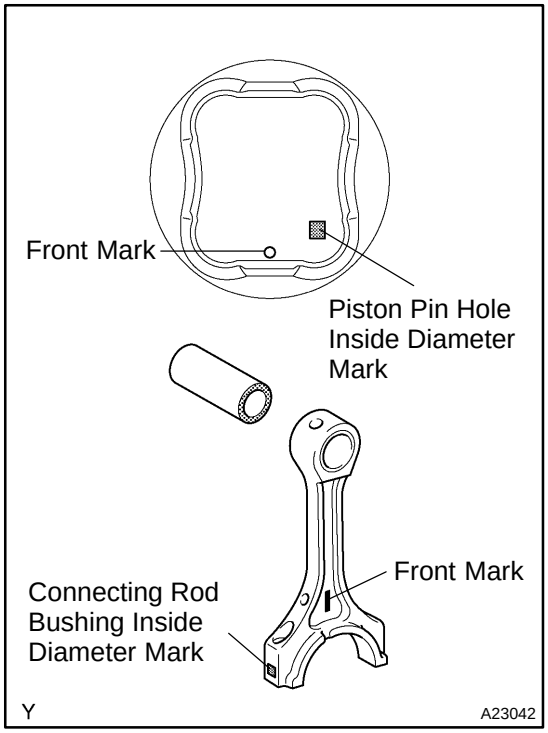

(e) If the oil clearance is greater than the maximum, replace the bushing. If necessary, replace the piston and piston pin together.

(f) Subtract the piston pin diameter measurement from the bushing inside diameter measurement.
Standard oil clearance:
0.005 to 0.011 mm (0.0002 to 0.0004 in.)
Maximum oil clearance: 0.050 mm (0.0020 in.)

(g) If the oil clearance is greater than the maximum, replace the bushing. If necessary, replace the connecting rod and piston pin together.

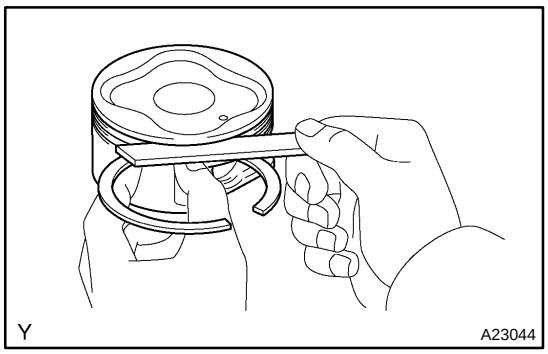

7. INSPECT RING GROOVE CLEARANCE

Using a feeler gauge, measure the clearance between the new piston ring and the wall of the ring groove.

Ring groove clearance:
No.1: 0.02 to 0.07 mm (0.0008 to 0.0028 in.)
No.2: 0.02 to 0.06 mm (0.0008 to 0.0024 in.)
Oil: 0.07 to 0.15 mm (0.0028 to 0.0060 in.)

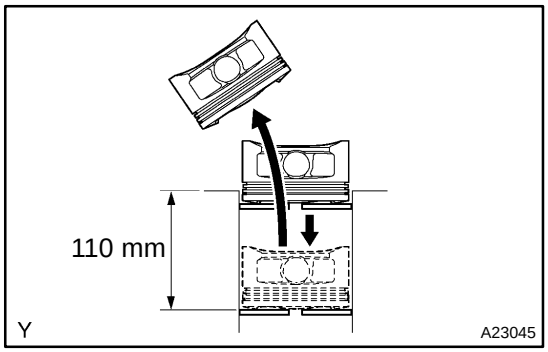

8. INSPECT PISTON RING END GAP

(a) Using a piston, push the piston ring a little beyond the bottom of the ring travel, 110 mm (4.33 in.) from the top of the cylinder block.

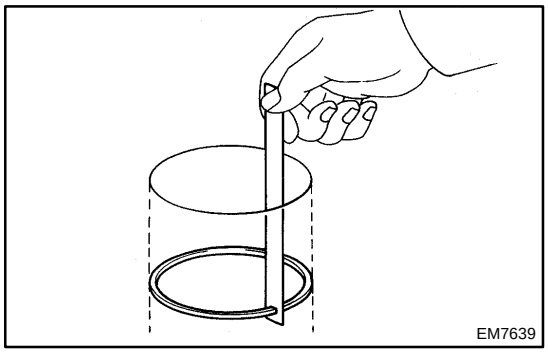

(b) Using a feeler gauge, measure the end gap.

Standard end gap:
No. 1: 0.30 to 0.40 mm (0.0118 to 0.0157 in.)
No. 2: 0.40 to 0.50 mm (0.0157 to 0.0197 in.)
Oil (Side rail): 0.10 to 0.40 mm (0.0039 to 0.0157 in.)
Maximum end gap:
No. 1: 1.0 mm (0.039 in.)
No. 2: 1.1 mm (0.043 in.)
Oil (Side rail): 1.0 mm (0.039 in.)

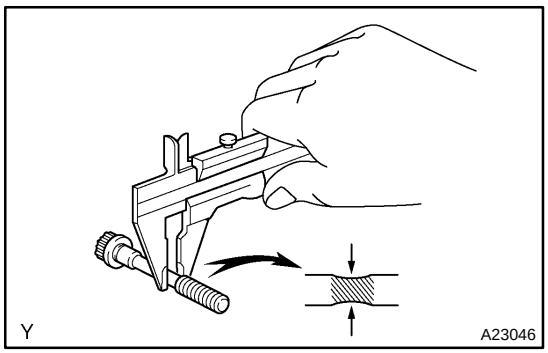

9. INSPECT CONNECTING ROD BOLT

Using a vernier caliper, measure the tension portion diameter of the bolt.

Standard diameter: 7.2 to 7.3 mm (0.283 to 0.287 in.)
Minimum diameter: 7.0 mm (0.276 in.)

If the diameter is less than the minimum, replace the bolt.

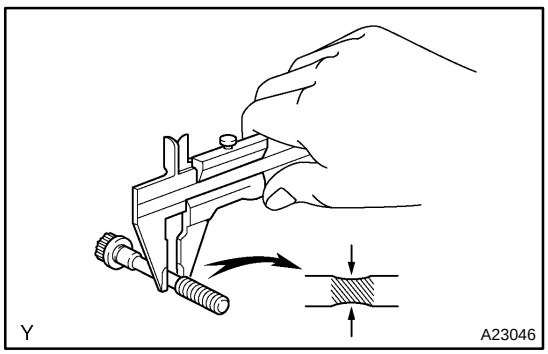

10. INSPECT CRANKSHAFT BEARING CAP SET BOLT

Using a vernier caliper, measure the tension portion diameter of the bolt.

Standard diameter:
10.0 to 10.2 mm (0.393 to 0.402 in.)

If the diameter is less than the minimum, replace the bolt.

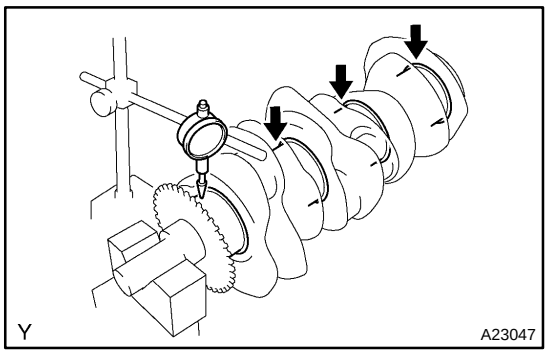

11. INSPECT CRANKSHAFT

(a) Using a dial indicator and V−blocks, measure the runout as shown in the illustration.
Maximum circle runout: 0.06 mm (0.0024 in.)

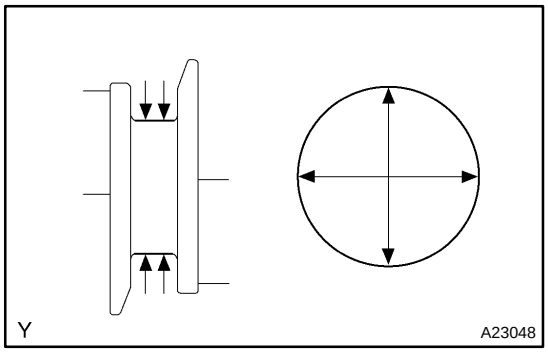

(b) Using a micrometer, measure the diameter of each main journal.
Diameter: 71.988 to 72.000 mm (2.8342 to 2.8346 in.)

(c) Check each main journal for taper and out−of−round as shown in the illustration.
Maximum taper and out−of−round:
0.02 mm (0.0008 in.)

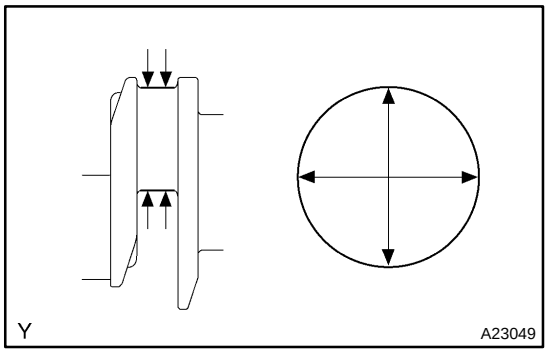

(d) Using a micrometer, measure the diameter of each crank pin.
Diameter: 55.992 to 56.000 mm (2.2044 to 2.2047 in.)

(e) Check each crank pin for taper and out−of−round as shownin the illustration.
Maximum taper and out−of−round:
0.02 mm (0.0008 in.)

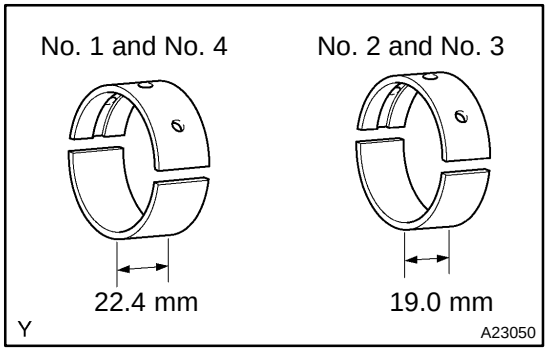

12. INSPECT CRANKSHAFT OIL CLEARANCE

HINT:
Main bearings come in widths of 19.0 mm (0.748 in.) and 22.4 mm (0.882 in.). Install the 22.4 mm (0.882 in.) bearings in the No. 1 and No. 4 cylinder block journal positions with the main bearing cap. Install the 19.0 mm (0.748 in.) bearings in the No. 2 and No. 3 positions.

(a) Clean each main journal and bearing.

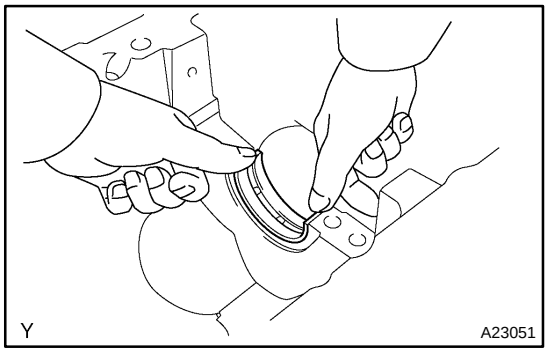

(b) Align the bearing claw with the claw groove of the cylinder block, and push in the 4 upper bearings.

NOTICE:
Do not apply engine oil to the bearing and its contact surface.

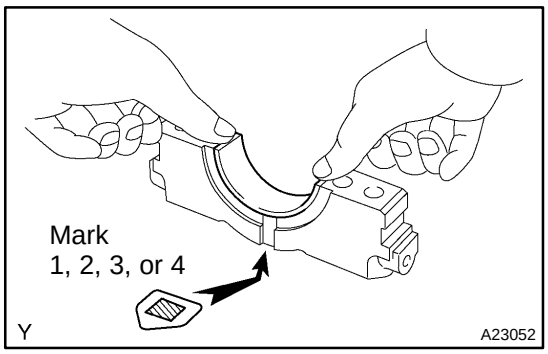

(c) Align the bearing claw with the claw groove of the main bearing cap, and push in the 4 bottom bearings.

NOTICE:

Do not apply engine oil to the bearing or its contact surface.

HINT:

A number marked on each main bearing cap indicates the installation position.

(d) Place the crankshaft on the cylinder block.

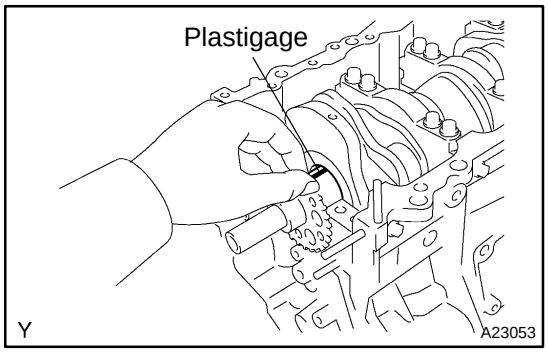

(e) Lay a strip of Plastigage across each journal.

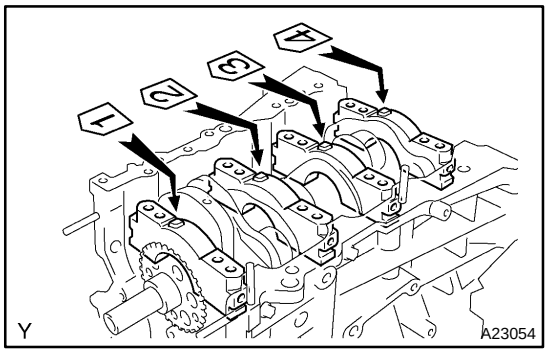

(f) Examine the front marks and numbers and install the bearing caps on the cylinder block.

(g) Apply a light coat of engine oil to the threads of the bearing cap bolts.

(h) Temporarily install the 8 main bearing cap bolts to the inside positions.

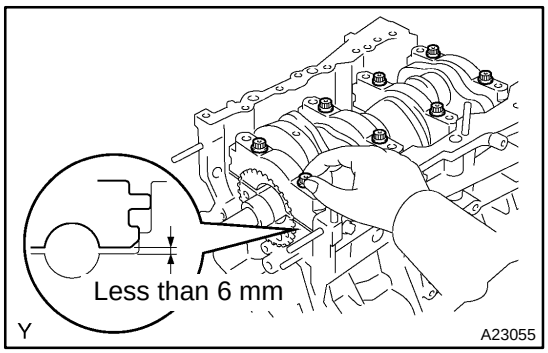

(i) Install the main bearing caps. Tighten the 2 bolts for each bearing cap until the clearance between the bearing cap and the cylinder block becomes less than 6 mm (0.23 in.).

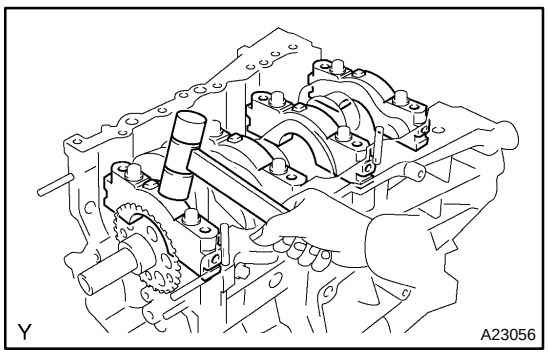

(j) Using a plastic−faced hammer, lightly tap the bearing cap to ensure a proper fit.

(k) Apply a light coat of engine oil to the threads of the main bearing cap bolts.

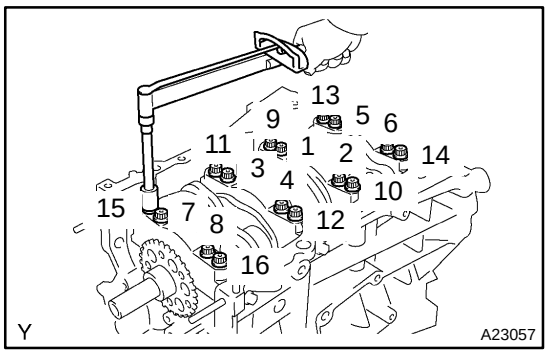

(l) Install the 16 main bearing cap bolts. Using several steps, uniformly tighten the bolts in the sequence as shown in the illustration.
Torque: 61 N·m (622 kgf·cm, 45 ft·lbf)

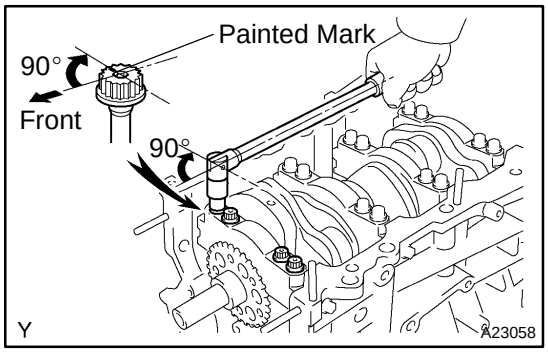

(m) Mark the front side of the bearing cap bolts with paint.
(n) Retighten the bearing cap bolts until 90° in the sequence as shown in the illustration.
(o) Check that the painted mark is now at a 90° angle to the front.

NOTICE:
Do not turn the crankshaft.

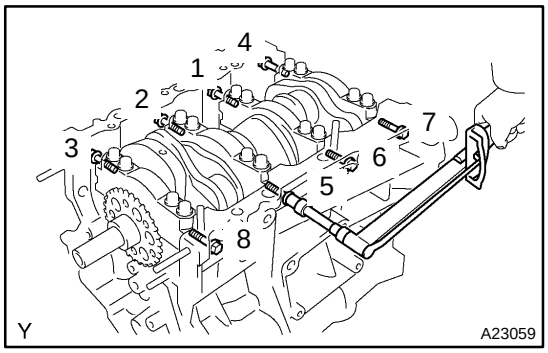

(p) Install the 8 main bearing cap bolts. Using several steps, uniformly tighten the bolts in the sequence as shown in the illustration.
Torque: 25 N·m (255 kgf·cm, 18 ft·lbf)
(q) Remove the main bearing caps.

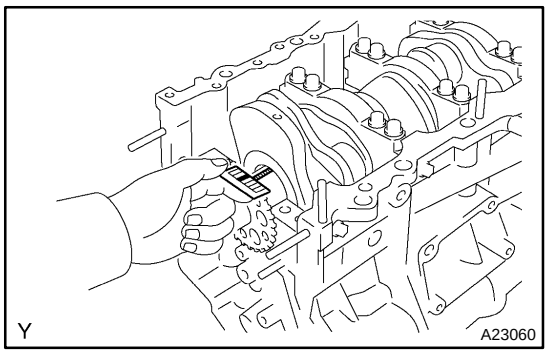

(r) Measure the Plastigage at its widest point.
Standard oil clearance:
0.018 to 0.030 mm (0.0007 to 0.0012 in.)
Maximum clearance: 0.046 mm (0.0018 in.)

If the oil clearance is greater than the maximum, replace the bearings. If necessary, replace the crankshaft.

NOTICE:
Completely remove the Plastigage.

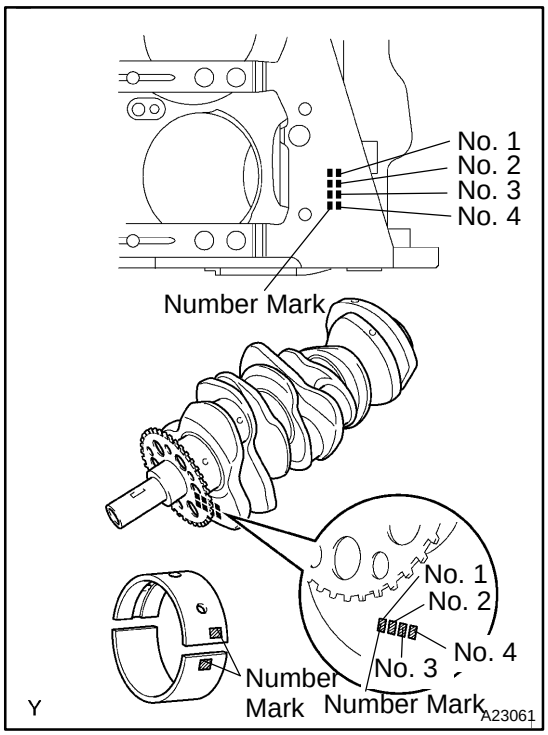

(s) If replacing a bearing, replace it with one that has the same number. If the number of the bearing cannot be determined, select the correct bearing by adding together the numbers imprinted on the cylinder block and crankshaft, then refer to the table below for the appropriate bearing number. There are 5 sizes of standard bearings, marked ”1”, ”2”, ”3”, ”4” and ”5” accordingly

Journal bearings

Cylinder block (A) + Crankshaft	0 to 5	6 to 11	12 to 17	18 to 23	24 to 28
Use Bearing	”1”	”2”	”3”	”4”	”5”

HINT:
EXAMPLE
Cylinder block ”11” (A) + Crankshaft ”06” (B)
= Total number 17 (Use bearing ”3”)

Item	Mark	mm (in.)
Cylinder block main journal bore diameter (A)	”00”	77.000 (3.0315)
	”01”	77.001 (3.0315)
	”02”	77.002 (3.0316)
	”03”	77.003 (3.0316)
	”04”	77.004 (3.0317)
	”05”	77.005 (3.0317)
	”06”	77.006 (3.0317)
	”07”	77.007 (3.0318)
	”08”	77.008 (3.0318)
	”09”	77.009 (3.0319)
	”10”	77.010 (3.0319)
	”11”	77.011 (3.0319)
	”12”	77.012 (3.0320)
	”13”	77.013 (3.0320)
	”14”	77.014 (3.0320)
	”15”	77.015 (3.0321)
	”16”	77.016 (3.0321)

Crankshaft main journal diameter (B)	”00”	71.999 to 72.000 (2.8346 to 2.8346)
	”01”	71.998 to 71.999 (2.8346 to 2.8346)
	”02”	71.997 to 71.998 (2.8345 to 2.8346)
	”03”	71.996 to 71.997 (2.8345 to 2.8346)
	”04”	71.995 to 71.996 (2.8344 to 2.8345)
	”05”	71.994 to 71.995 (2.8344 to 2.8344)
	”06”	71.993 to 71.994 (2.8343 to 2.8344)
	”07”	71.992 to 71.993 (2.8343 to 2.8343)
	”08”	71.991 to 71.992 (2.8343 to 2.8343)
	”09”	71.990 to 71.991 (2.8343 to 2.8343)
	”10”	71.989 to 71.990 (2.8342 to 2.8343)
	”11”	71.988 to 71.989 (2.8342 to 2.8342)
Standard bearing center wall thickness	”1”	2.488 to 2.491 (0.0980 to 0.0981)
	”2”	2.491 to 2.494 (0.0981 to 0.0982)
	”3”	2.494 to 2.497 (0.0982 to 0.0983)
	”4”	2.497 to 2.500 (0.0982 to 0.0984)
	”5”	2.500 to 2.503 (0.0984 to 0.0985)

EM1Y2−01

REASSEMBLY

1. INSTALL STUD BOLT

(a) Install the stud bolts as shown in the illustration.

Torque:
Stud bolt A: 11 N·m (112 kgf·cm, 8.1 ft·lbf)
Stud bolt B: 4.5 N·m (46 kgf·cm, 40 in.·lbf)
Stud bolt C: 4.0 N·m (41 kgf·cm, 35 in.·lbf)

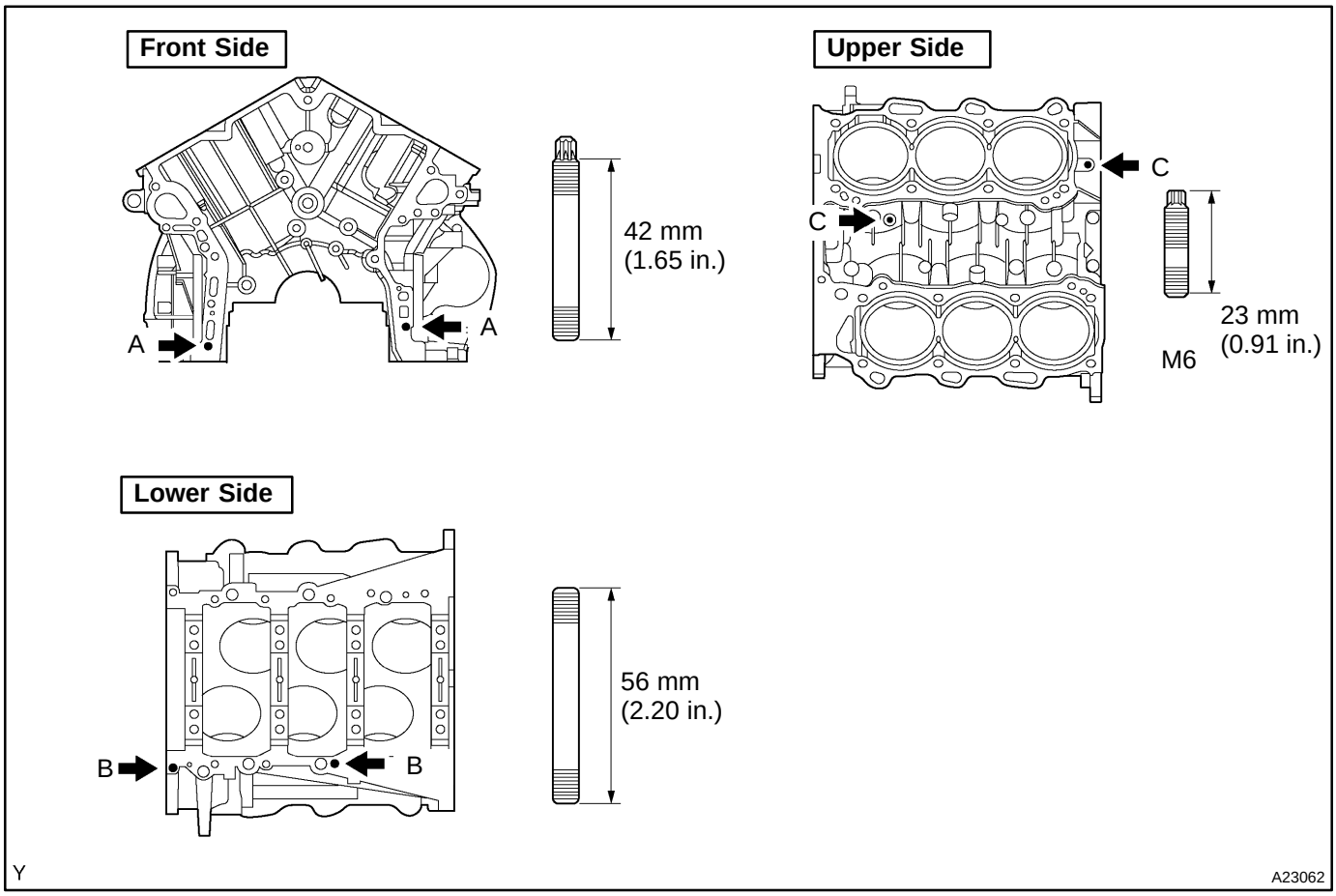

2. INSTALL STRAIGHT PIN

(a) Using a plastic−faced hammer, tap in the straight pin.

Standard protrusion:

Pin A: 22.5 to 23.5 mm (0.886 to 0.925 in.)

Pin B: 10.5 to 11.5 mm (0.413 to 0.453 in.)

Pin C: 8.5 to 9.5 mm (0.335 to 0.374 in.)

Pin D: 5.5 to 6.5 mm (0.217 to 0.256 in.)

Front Side

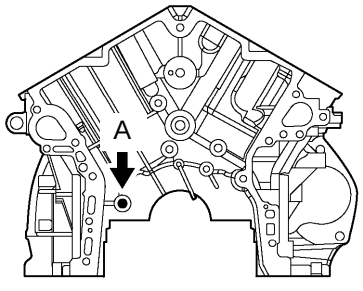

Protrusion Height: 22.5 to 23.5 mm
(0.886 to 0.925 in.)

Front Side

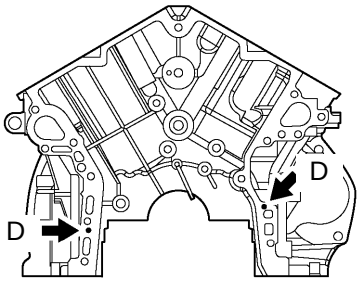

Protrusion Height: 5.5 to 6.5 mm
(0.217 to 0.256 in.)

Rear Side

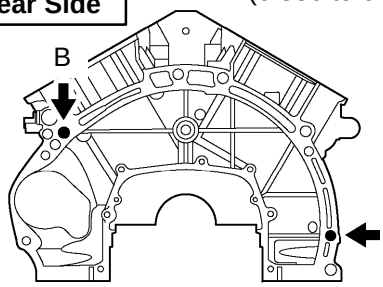

Protrusion Height: 10.5 to 11.5 mm
(0.413 to 0.453 in.)

Rear Side

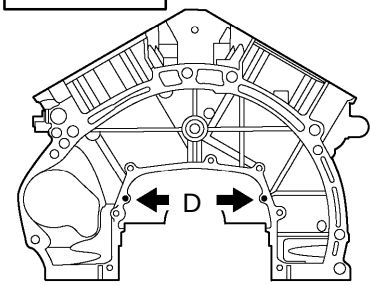

Protrusion Height: 5.5 to 6.5 mm
(0.217 to 0.256 in.)

Upper Side

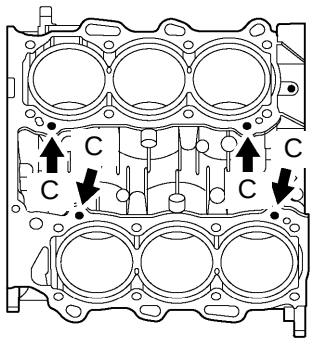

Protrusion Height: 8.5 to 9.5 mm (0.335 to 0.374 in.)

Lower Side

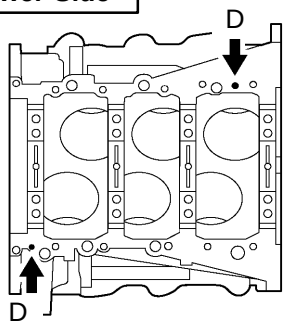

Protrusion Height: 5.5 to 6.5 mm
(0.217 to 0.256 in.)

Y

A23063

3. INSTALL TIGHT PLUG

(a) Apply adhesive around the tight plugs.
Adhesive: Part No. 08833−00070, THREE BOND 1324 or equivalent.

(b) Using SST, install the tight plugs as shown in the illustration.
SST 09950−60010 (09951−00350), 09950−70010 (09951−07150)
Standard depth: 0.2 to 1.2 mm (0.008 to 0.047 in.)

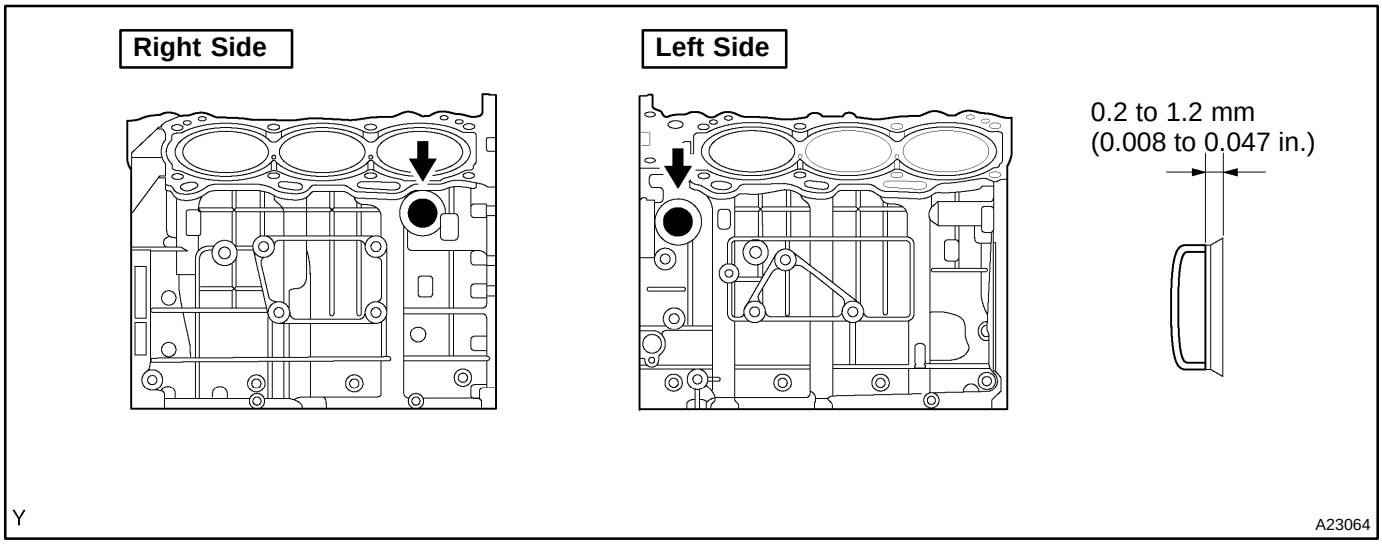

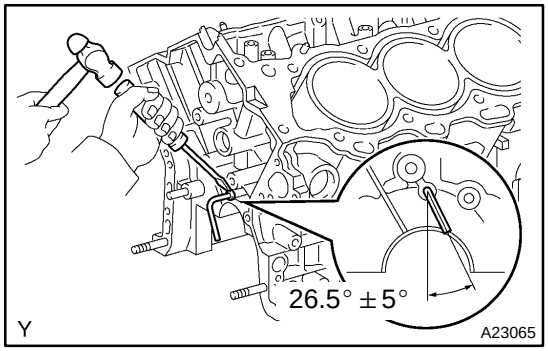

4. INSTALL OIL JET

Using a screwdriver and hammer, tap in an oil jet.

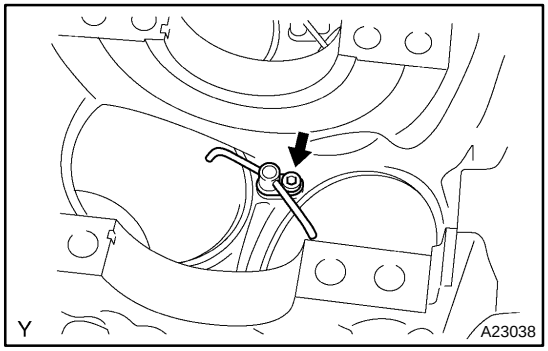

5. INSTALL OIL NOZZLE

Using a 5 mm socket hexagon wrench, install the 3 oil nozzles.
Torque: 9.0 N·m (92 kgf·cm, 80 in.·lbf)

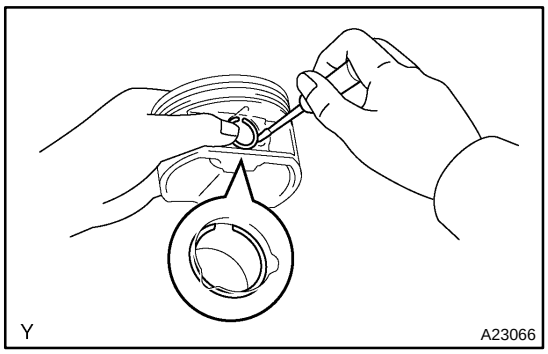

6. INSTALL PISTON PIN HOLE SNAP RING

Using a screwdriver, install a new snap ring at one side of the piston pin hole.

HINT:

Check that the end gap of the snap ring does not overlap the pin hole cutout portion of the piston.

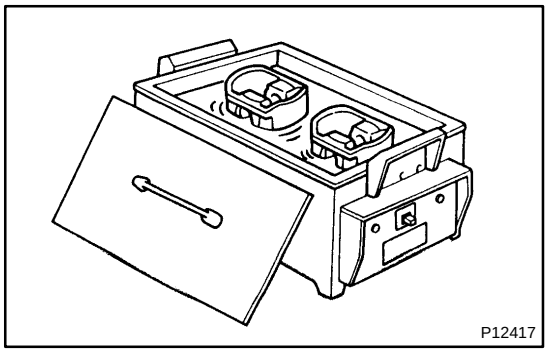

7. INSTALL PISTON

(a) Gradually heat the piston to about 80°C (176°F).

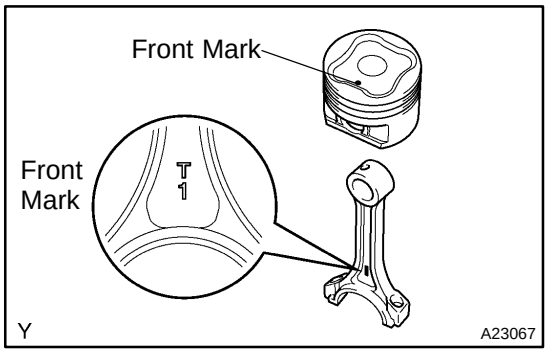

(b) Coat the piston pin with engine oil.

(c) Align the front marks of the piston and connecting rod, and push in the piston pin with a thumb.

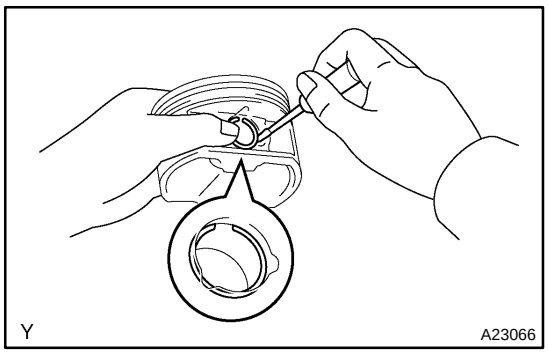

8. INSTALL PISTON PIN HOLE SNAP RING

Using a screwdriver, install a new snap ring on the other side of the piston pin hole.

HINT:

Be sure that the end gap of the snap ring does not overlap the pin hole cutout portion of the piston.

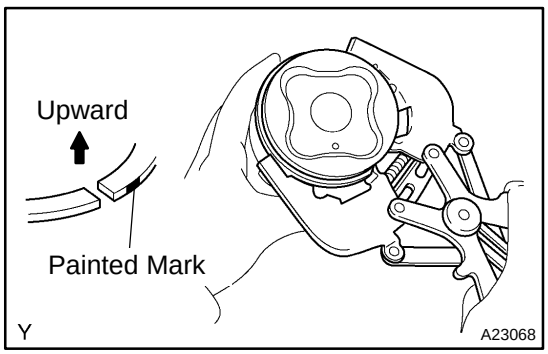

9. INSTALL PISTON RING SET

(a) Install the oil ring expander and 2 side rails by hand.

(b) Using a piston ring expander, install the 2 compression rings.

NOTICE:

Install the compression ring No. 2 with the painted mark facing upward.

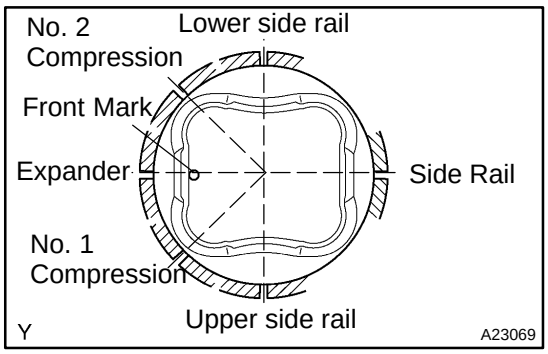

(c) Position the piston rings so that the ring ends are as shown in the illustration.

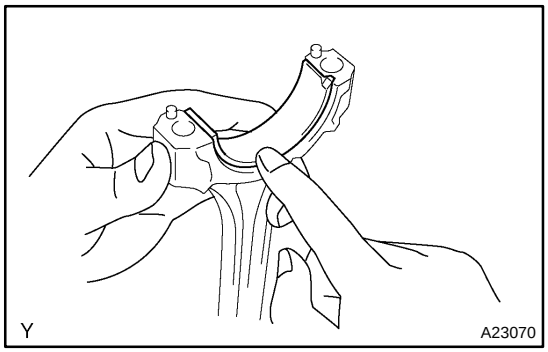

10. INSTALL CONNECTING ROD BEARING

Align the bearing claw with the groove of the connecting rod or connecting cap.

NOTICE:

Clean the backside of the bearing and the bearing surface of the connecting rod and prevent oil from adhering to them.

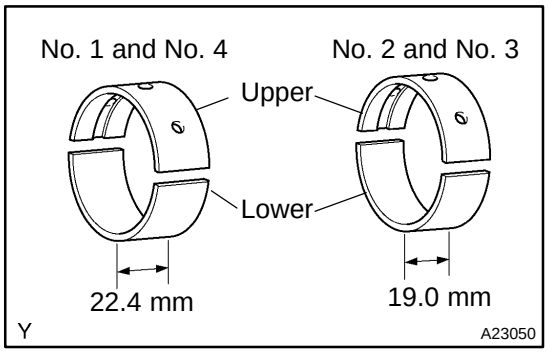

11. INSTALL CRANKSHAFT BEARING

HINT:

Main bearings come in widths of 19.0 mm (0.748 in.) and 22.4 mm (0.882 in.). Install the 22.4 mm (0.882 in.) bearings in the No. 1 and No. 4 cylinder block journal positions with the main bearing cap. Install the 19.0 mm (0.748 in.) bearings in the No. 2 and No. 3 positions.

(a) Clean each main journal and bearing.

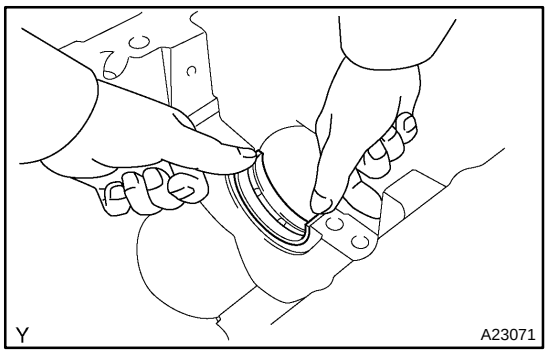

(b) Align the bearing claw with the claw groove of the cylinder block, and push in the 4 upper bearings.

NOTICE:

Do not apply engine oil to the bearing or its contact surface.

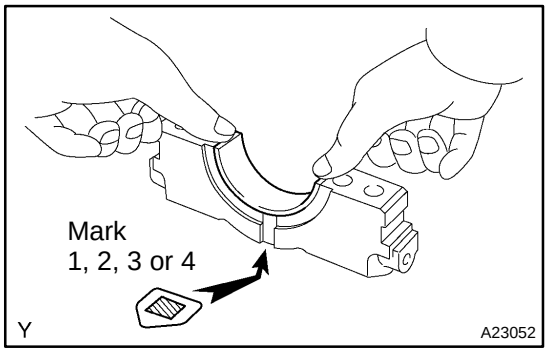

(c) Align the bearing claw with the claw groove of the main bearing cap, and push in the 4 lower bearings.

NOTICE:

Do not apply engine oil to the bearing or its contact surface.

HINT:

The number marked on each main bearing cap indicates the installation position.

12. INSTALL CRANKSHAFT

(a) Apply engine oil to the upper bearing and install the crankshaft on the cylinder block.

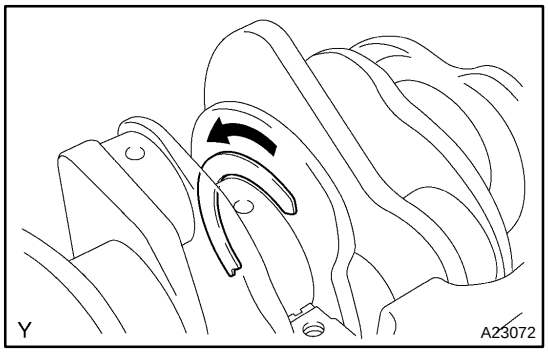

(b) Install the 2 upper thrust washers to the No. 2 journal position of the cylinder block.
   (1) Push the crankshaft toward the front (rear) side.
   (2) Install the 2 upper thrust washers with the oil grooves facing outward.

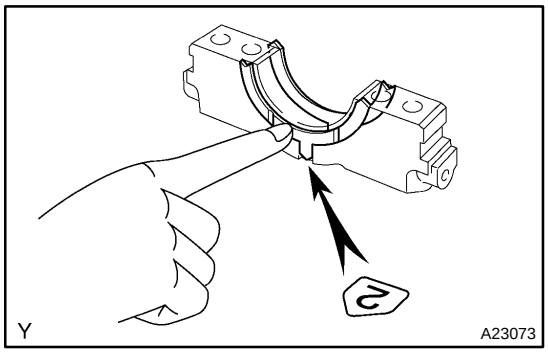

(c) Install the 2 lower thrust washers on the No. 2 bearing cap with the grooves facing outward.

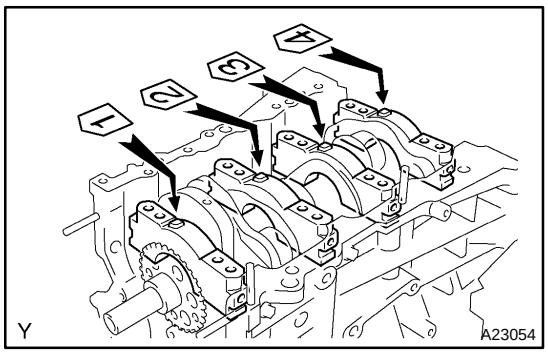

(d) Examine the front marks and numbers and install the bearing caps on the cylinder block.

(e) Apply a light coat of engine oil to the threads of the bearing cap bolts.

(f) Temporarily install the 8 main bearing cap bolts to the inside positions.

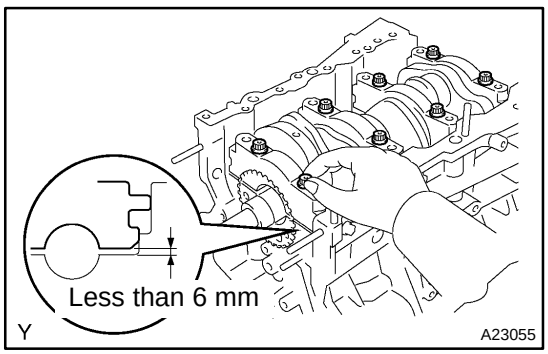

(g) Install the main bearing caps. Tighten the 2 bolts for each bearing cap until the clearance between the bearing cap and the cylinder block becomes less than 6 mm (0.23 in.).

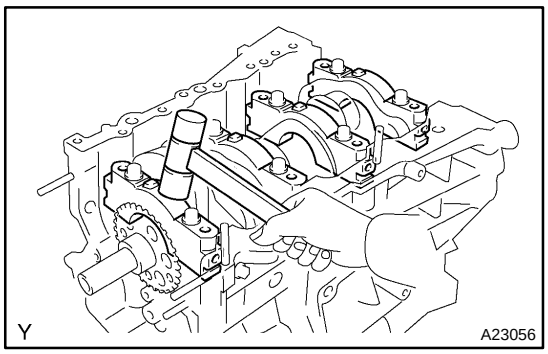

(h) Using a plastic−faced hammer, lightly tap the bearing cap to ensure a proper fit.

(i) Apply a light coat of engine oil to the threads of the main bearing cap bolts.

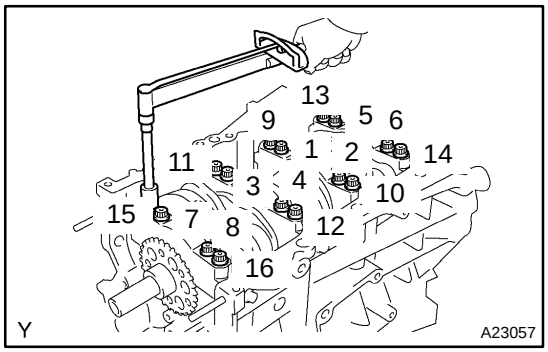

(j) Install the 16 main bearing cap bolts. Using several steps, uniformly tighten the bolts in the sequence shown in the illustration.
Torque: 61 N·m (622 kgf·cm, 45 ft·lbf)

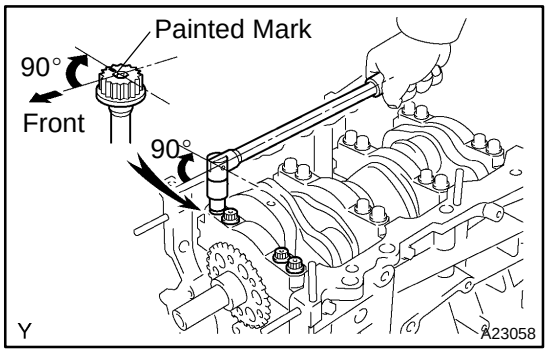

(k) Mark the front side of the bearing cap bolts with paint.

(l) Retighten the bearing cap bolts 90° in the sequence as shown in the illustration.

(m) Check that the painted mark is now at a 90° angle to the front.

(n) Check that the crankshaft turns smoothly.

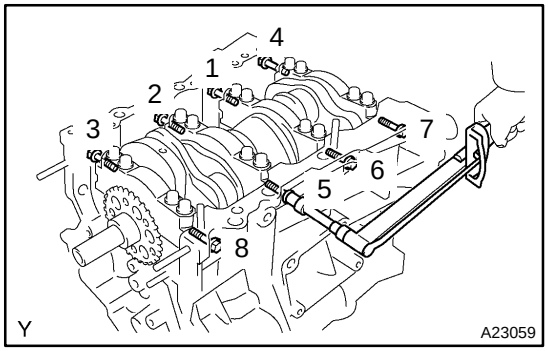

(o) Using several steps, uniformly tighten the 8 main bearing cap bolts in the sequence as shown in the illustration.
Torque: 25 N·m (255 kgf·cm, 18 ft·lbf)

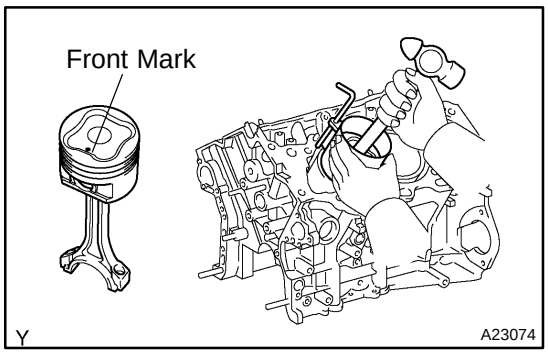

13. INSTALL PISTON W/CONNECTING ROD

(a) Apply engine oil to the cylinder walls, the pistons, and the surfaces of the connecting rod bearings.

(b) Check the position of the piston ring ends.

(c) Using a piston ring compressor, push the correctly numbered piston and connecting rod assemblies into each cylinder with the front mark of the piston facing forward.

NOTICE:

- **Clean the backside of the bearing and the bearing surface of the connecting rod cap and prevent oil from adhering to them.**
- **Match the numbered connecting rod cap with the connecting rod.**

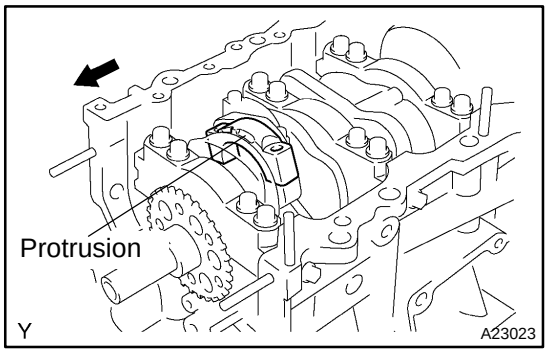

(d) Check that the protrusion of the connecting rod cap is facing the correct direction.

(e) Apply a light coat of engine oil to the threads of the connecting rod cap bolts.

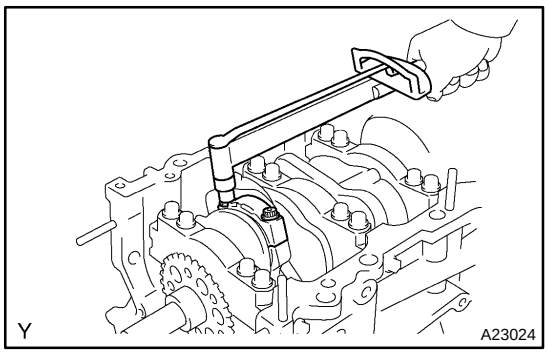

(f) Using SST, tighten the bolts alternately to the specified torque.

SST 09011−38121

Torque: 25 N·m (250 kgf·cm, 18 ft·lbf)

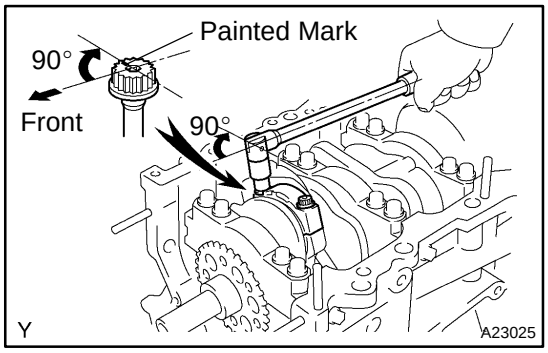

(g) Mark the front side of each connecting cap bolt with paint.

(h) Retighten the cap bolts 90° as shown.

(i) Check that the crankshaft turns smoothly.

14. INSTALL ENGINE REAR OIL SEAL RETAINER

(a) Remove any old packing material (FIPG) and be careful not to drop any oil on the contact surfaces of the oil seal retainer and cylinder block.

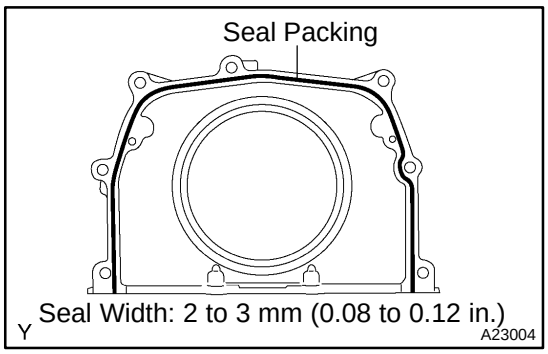

(b) Apply a continuous bead of seal packing (diameter 2 to 3 mm (0.08 to 0.12 in.)) to the oil seal retainer as shown in the illustration.

Seal packing: Part No. 08826−00080 or equivalent

NOTICE:

Parts must be assembled within 3 minutes of application. Otherwise the seal packing must be removed and reapplied.

(c) Install the oil seal retainer with the 5 bolts and 2 nuts.

Torque:
Bolt: 10 N·m (102 kgf·cm, 7 ft·lbf)
Nut: 9.0 N·m (92 kgf·cm, 80 in.·lbf)

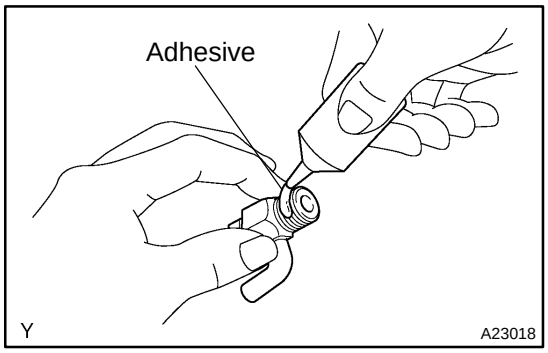

15. INSTALL WATER DRAIN COCK

(a) Apply adhesive to 2 or 3 threads of the drain cock ends.

Adhesive: Part No. 08833−00070, THREE BOND 1324 or equivalent

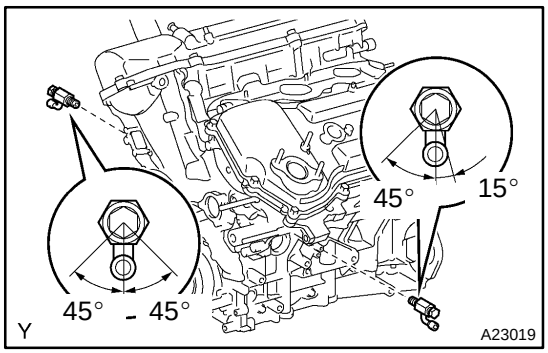

(b) After tightening the drain cocks to the specified torque, rotate them clockwise as shown in the illustration.

Torque: 25 N·m (255 kgf·cm, 18 ft·lbf)

NOTICE:

- **Do not rotate the drain cocks more than 1 complete revolution (360°) after tightening the drain cocks to the specified torque.**
- **Do not loosen the drain cocks after setting them correctly.**

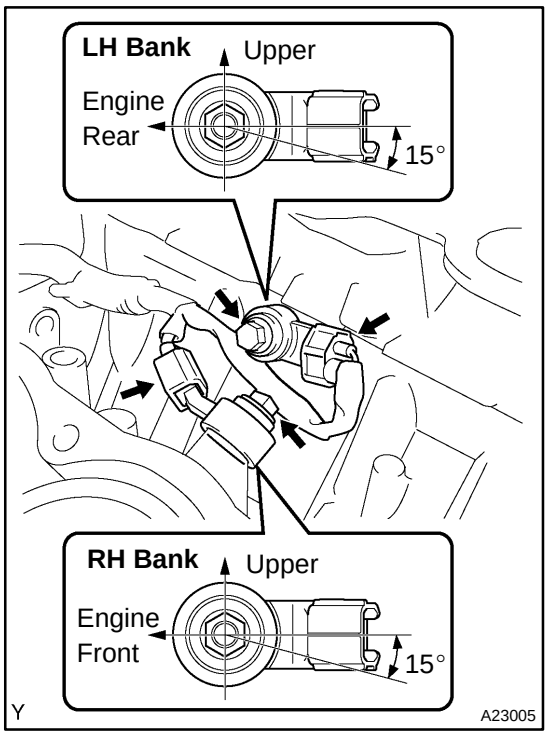

16. INSTALL KNOCK SENSOR

(a) Install the 2 knock sensors with the 2 bolts within a 15° angle as shown in the illustration.
Torque: 20 N·m (204 kgf·cm, 15 ft·lbf)

(b) Connect the knock sensor connectors.

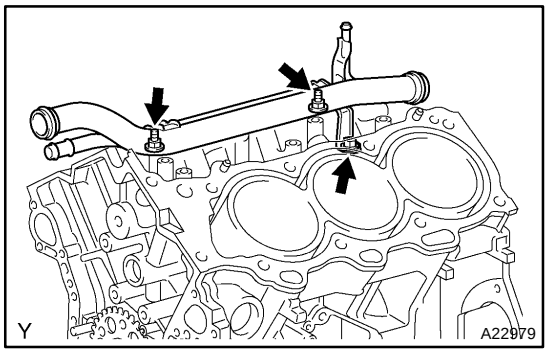

17. INSTALL WATER OUTLET PIPE NO.1

Install the water outlet pipe with the 3 bolts.
Torque: 10 N·m (102 kgf·cm, 7 ft·lbf)

EM1Y1−01

REPLACEMENT

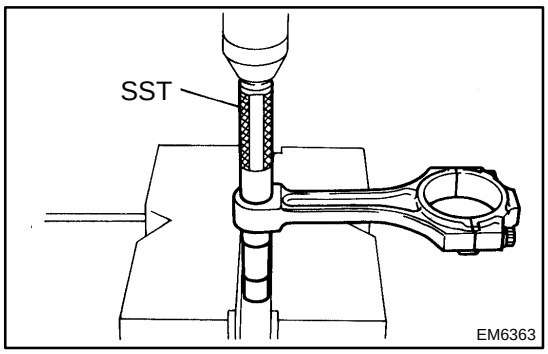

1. REPLACE CONNECTING ROD SMALL END BUSH

Using SST and a press, press out the bushing.

SST 09222−30010

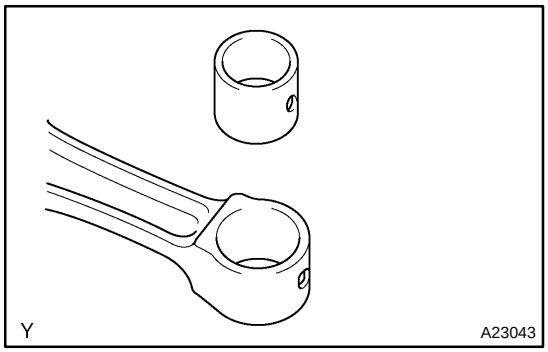

2. INSTALL CONNECTING ROD SMALL END BUSH

(a) Align the oil holes of a new bushing and the connecting rod.

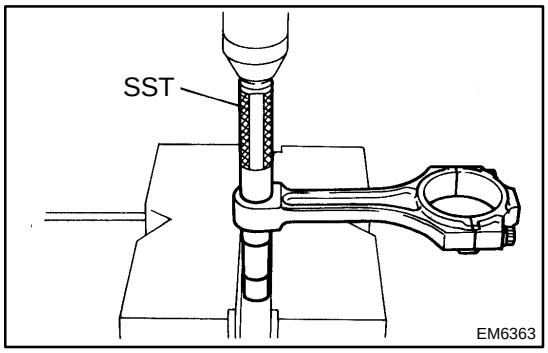

(b) Using SST and a press, press in the bushing.
SST 09222−30010

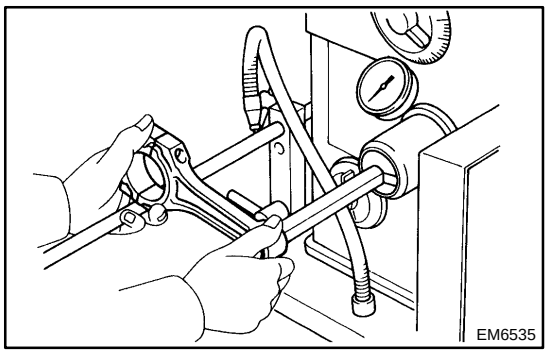

(c) Using a pin hole grinder, hone the bushing to obtain the standard specified clearance between the bushing and piston pin.

Standard oil clearance:
0.005 to 0.011 mm (0.0002 to 0.0004 in.)

HINT:
Check that the piston pin fits at a normal room temperature. Coat the piston pin with engine oil, and push it into the connecting rod with a thumb.

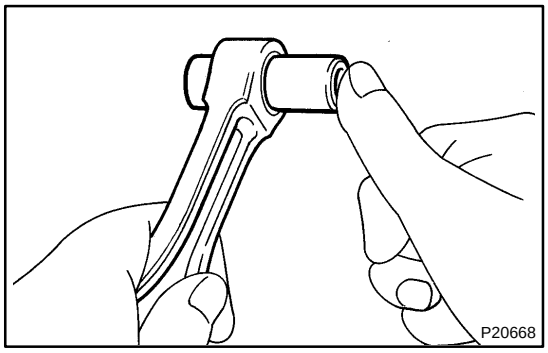

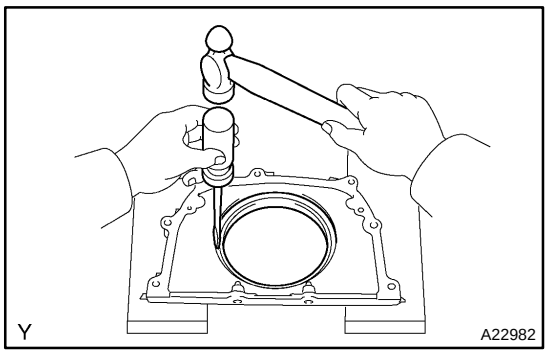

3. REPLACE ENGINE REAR OIL SEAL

HINT:

There are 2 methods ((a) and (b)) to replace the oil seal.

(a) If the rear oil seal retainer is removed from the cylinder block:

(1) Using a screwdriver and hammer, tap out the oil seal.

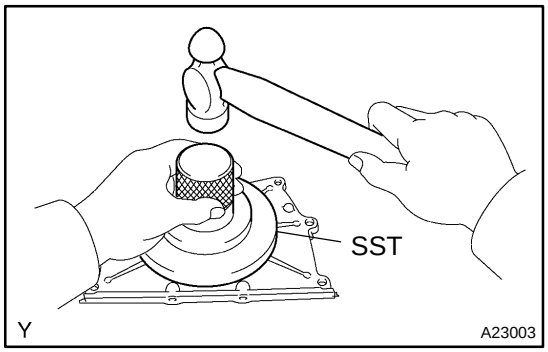

(2) Using SST and a hammer, tap in a new oil seal until its surface is flush with the rear oil seal retainer edge.

SST 09223−78010

(3) Apply MP grease to the oil seal lip.

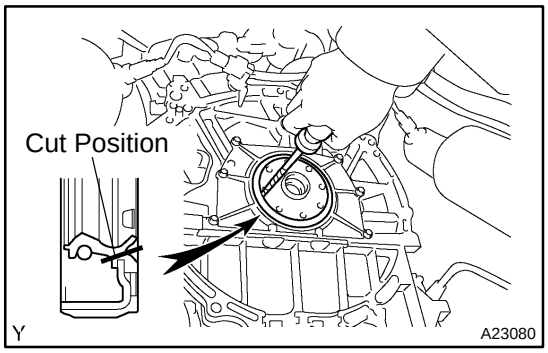

(b) If the rear oil seal retainer is installed to the cylinder block:

(1) Using a knife, cut off the oil seal lip.

(2) Using a screwdriver, pry out the oil seal.

NOTICE:

Be careful not to damage the crankshaft. Tape the screwdriver tip.

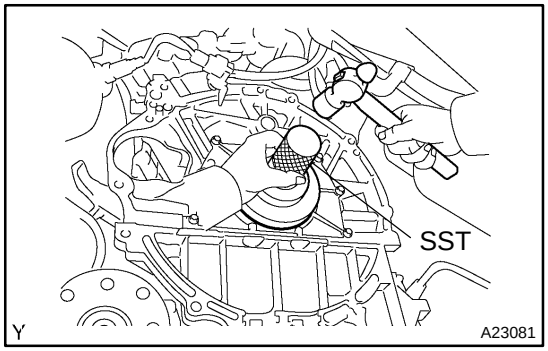

(3) Using SST and a hammer, tap in the oil seal until its surface is flush with the rear oil seal retainer edge.

SST 09223−78010

(4) Apply MP grease to a new oil seal lip.

CYLINDER HEAD

COMPONENTS

EM1XO−01

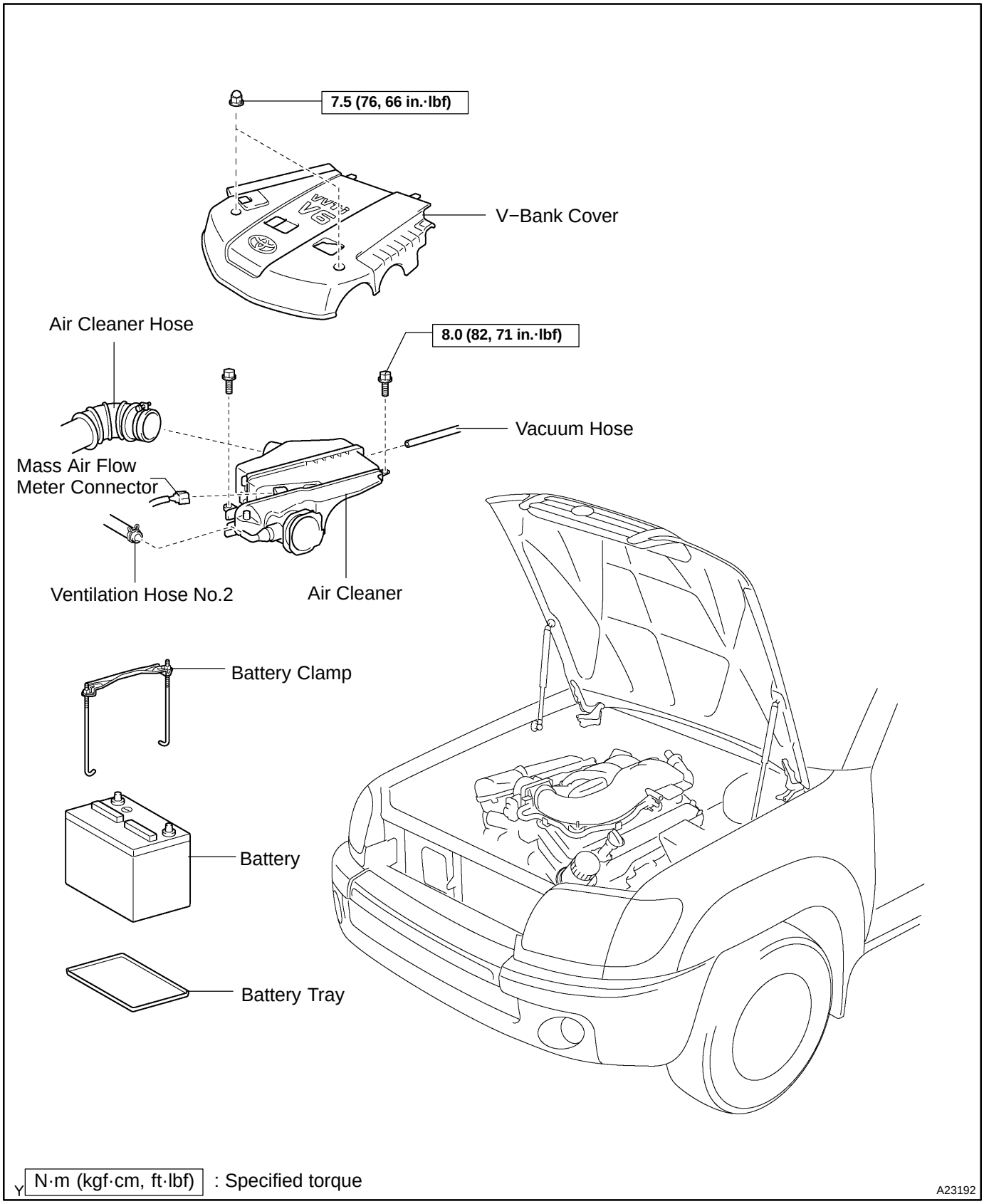

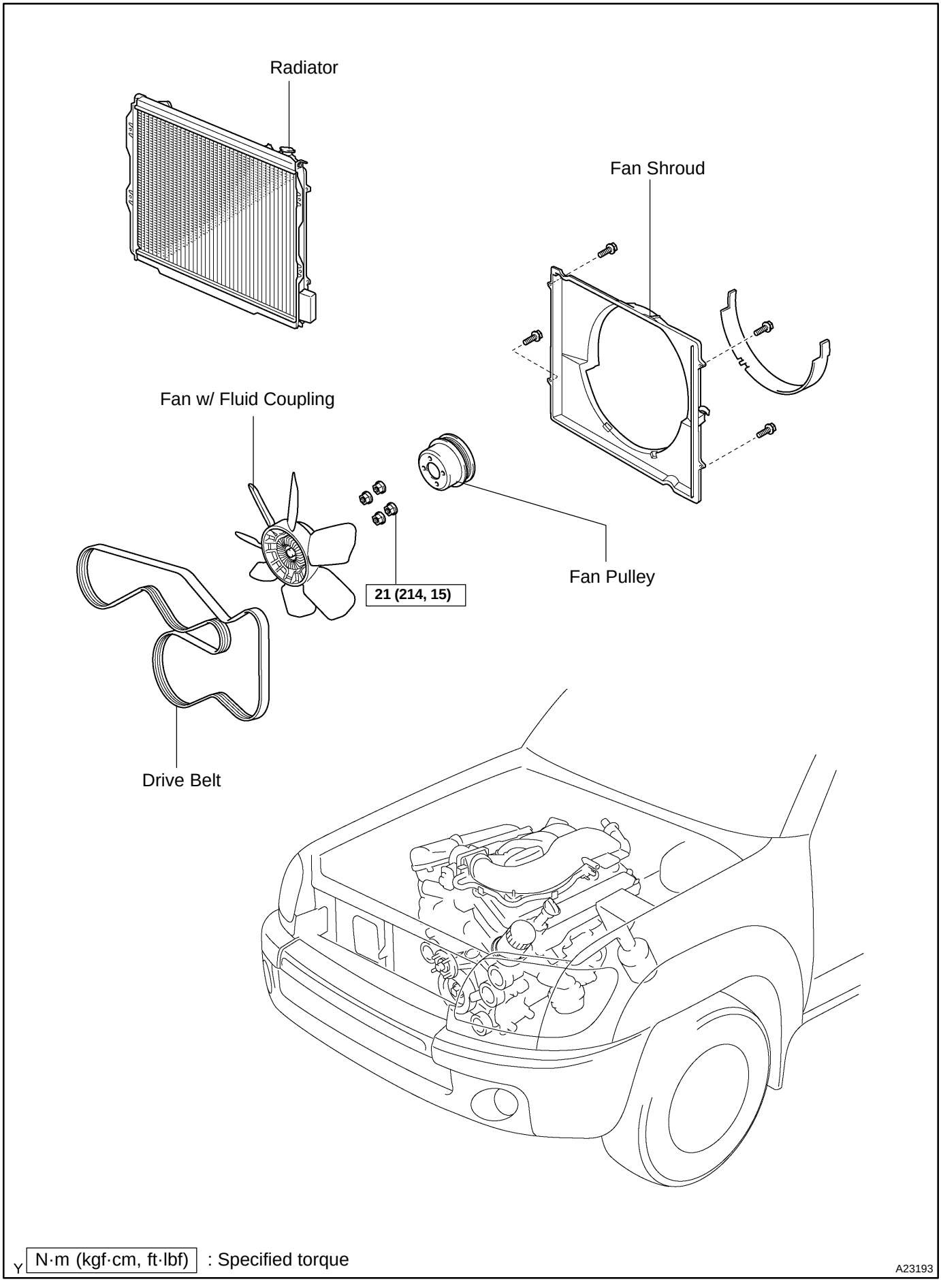
Radiator
Fan Shroud
Fan w/ Fluid Coupling
21 (214, 15)
Fan Pulley
Drive Belt
Y N·m (kgf·cm, ft·lbf) : Specified torque
A23193

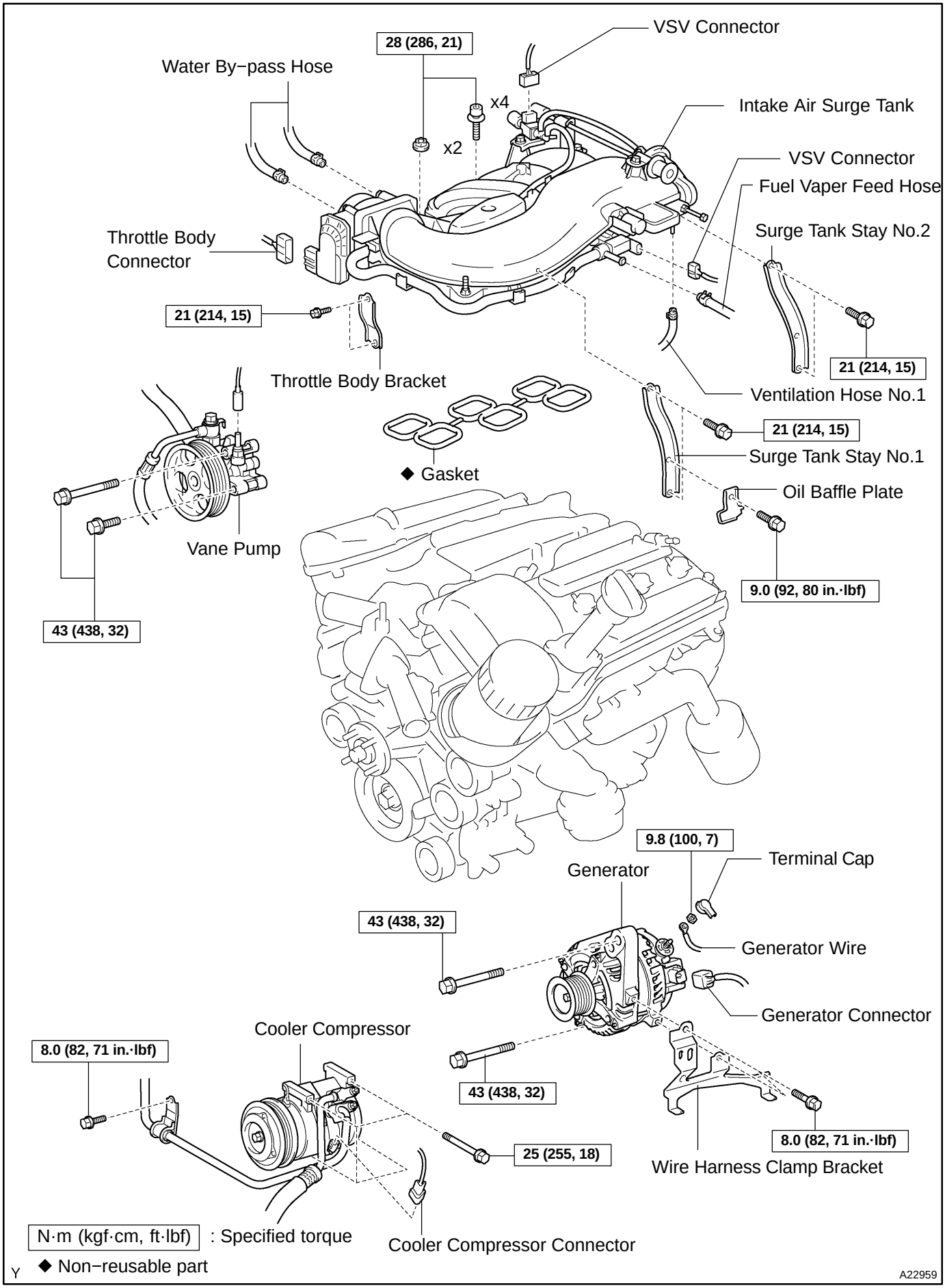
VSV Connector
28 (286, 21)
Water By−pass Hose
x4
Intake Air Surge Tank
x2
VSV Connector
Fuel Vaper Feed Hose
Throttle Body Connector
Surge Tank Stay No.2
21 (214, 15)
21 (214, 15)
Throttle Body Bracket
Ventilation Hose No.1
21 (214, 15)
Surge Tank Stay No.1
◆ Gasket
Oil Baffle Plate
Vane Pump
9.0 (92, 80 in.·lbf)
43 (438, 32)
9.8 (100, 7)
Terminal Cap
Generator
43 (438, 32)
Generator Wire
Generator Connector
Cooler Compressor
8.0 (82, 71 in.·lbf)
43 (438, 32)
8.0 (82, 71 in.·lbf)
25 (255, 18)
Wire Harness Clamp Bracket
N·m (kgf·cm, ft·lbf) : Specified torque
Cooler Compressor Connector
◆ Non−reusable part
Y
A22959

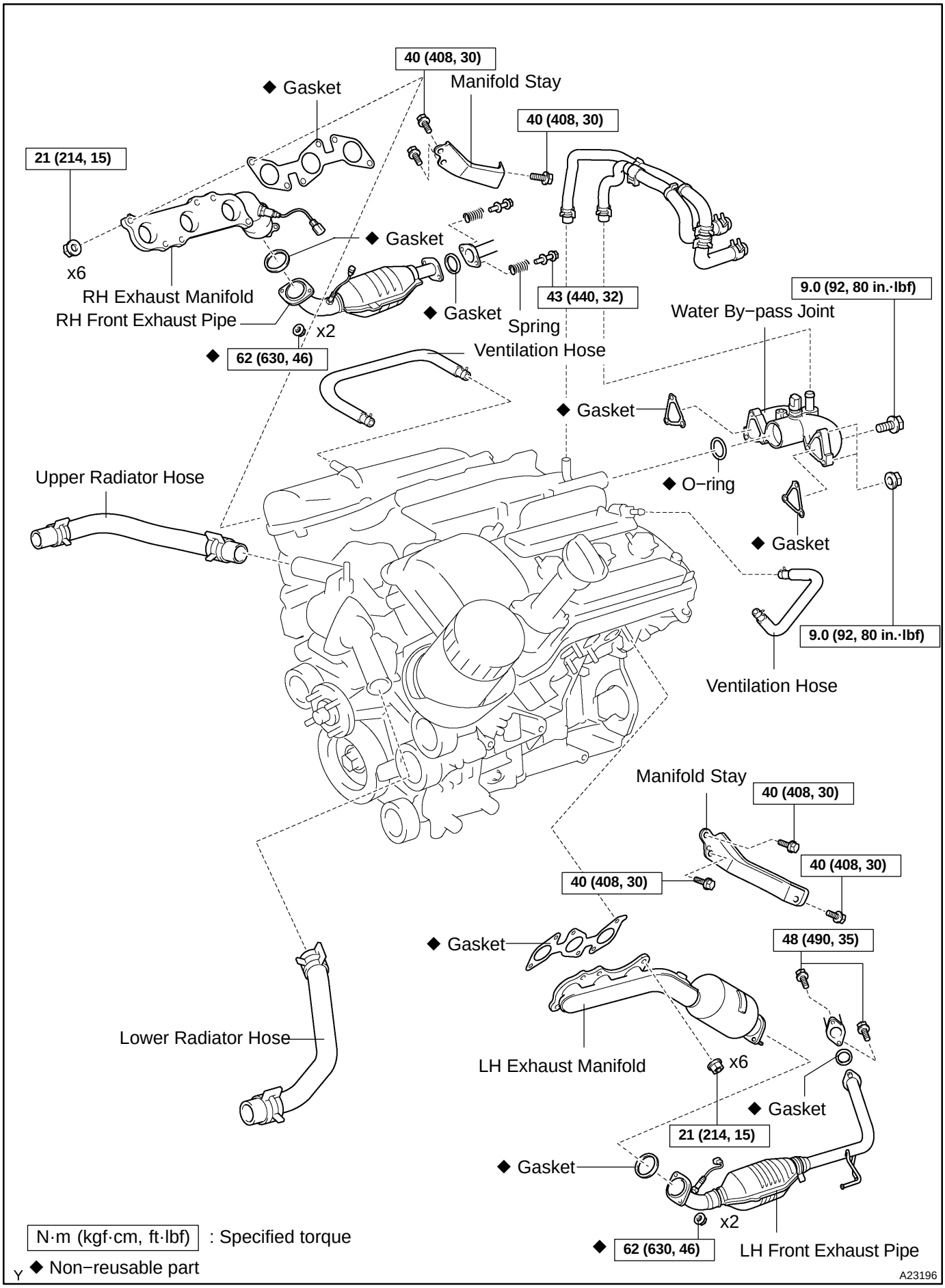
40 (408, 30)
Manifold Stay
◆ Gasket
40 (408, 30)
21 (214, 15)
x6
◆ Gasket
RH Exhaust Manifold
RH Front Exhaust Pipe
x2
◆ Gasket
43 (440, 32)
Spring
9.0 (92, 80 in.·lbf)
Water By−pass Joint
◆ 62 (630, 46)
Ventilation Hose
◆ Gasket
Upper Radiator Hose
◆ O−ring
◆ Gasket
9.0 (92, 80 in.·lbf)
Ventilation Hose
Manifold Stay
40 (408, 30)
40 (408, 30)
40 (408, 30)
◆ Gasket
48 (490, 35)
Lower Radiator Hose
LH Exhaust Manifold
x6
◆ Gasket
21 (214, 15)
◆ Gasket
x2
◆ 62 (630, 46)
LH Front Exhaust Pipe
N·m (kgf·cm, ft·lbf) : Specified torque
◆ Non−reusable part
A23196

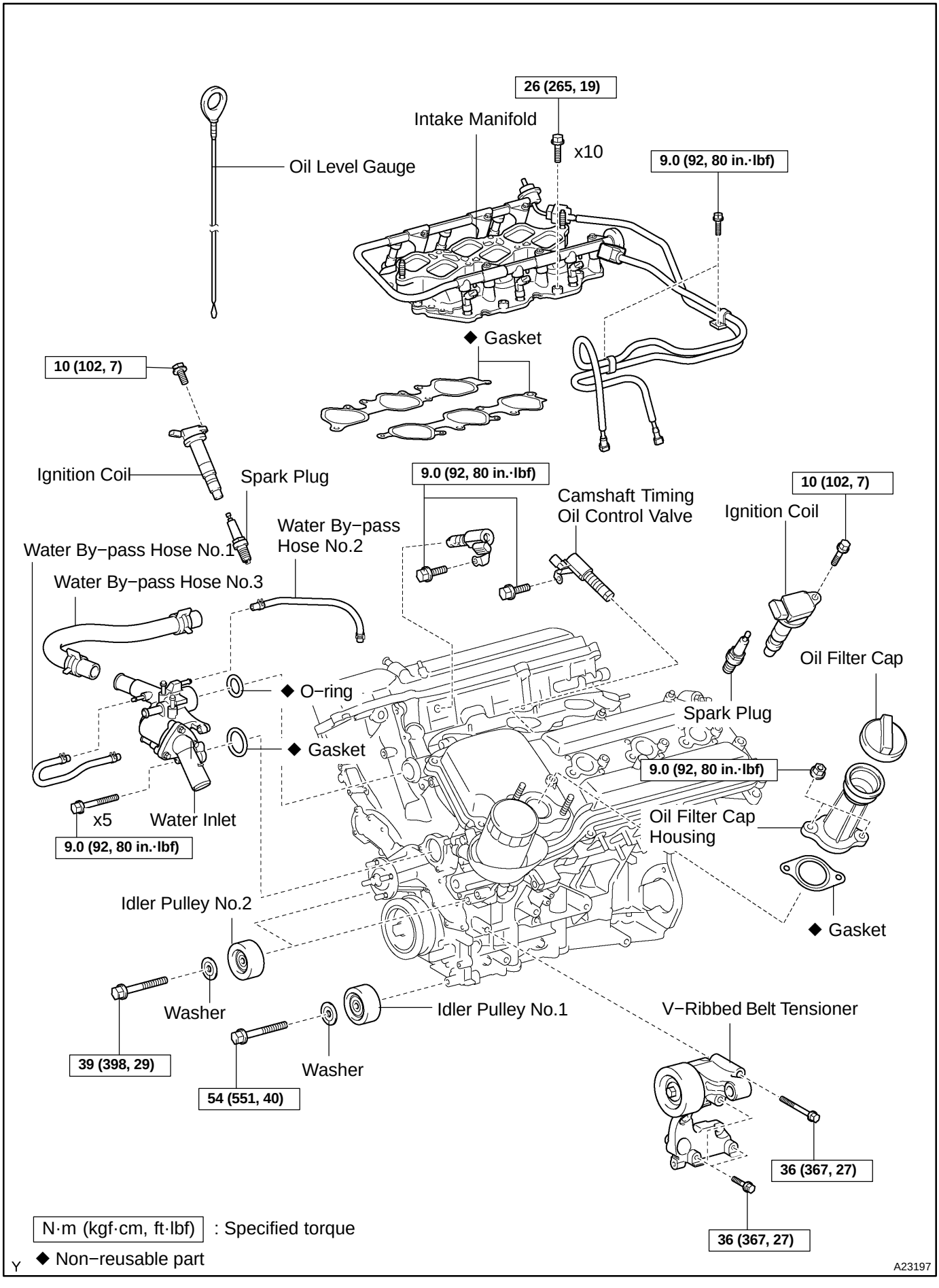
26 (265, 19)
Intake Manifold
x10
Oil Level Gauge
9.0 (92, 80 in.·lbf)
◆ Gasket
10 (102, 7)
Ignition Coil
Spark Plug
9.0 (92, 80 in.·lbf)
Camshaft Timing
Oil Control Valve
10 (102, 7)
Ignition Coil
Water By−pass
Hose No.2
Water By−pass Hose No.1
Water By−pass Hose No.3
◆ O−ring
◆ Gasket
Spark Plug
Oil Filter Cap
9.0 (92, 80 in.·lbf)
Oil Filter Cap
Housing
x5
Water Inlet
9.0 (92, 80 in.·lbf)
◆ Gasket
Idler Pulley No.2
Washer
Idler Pulley No.1
V−Ribbed Belt Tensioner
39 (398, 29)
Washer
54 (551, 40)
36 (367, 27)
36 (367, 27)
N·m (kgf·cm, ft·lbf) : Specified torque
◆ Non−reusable part
Y
A23197

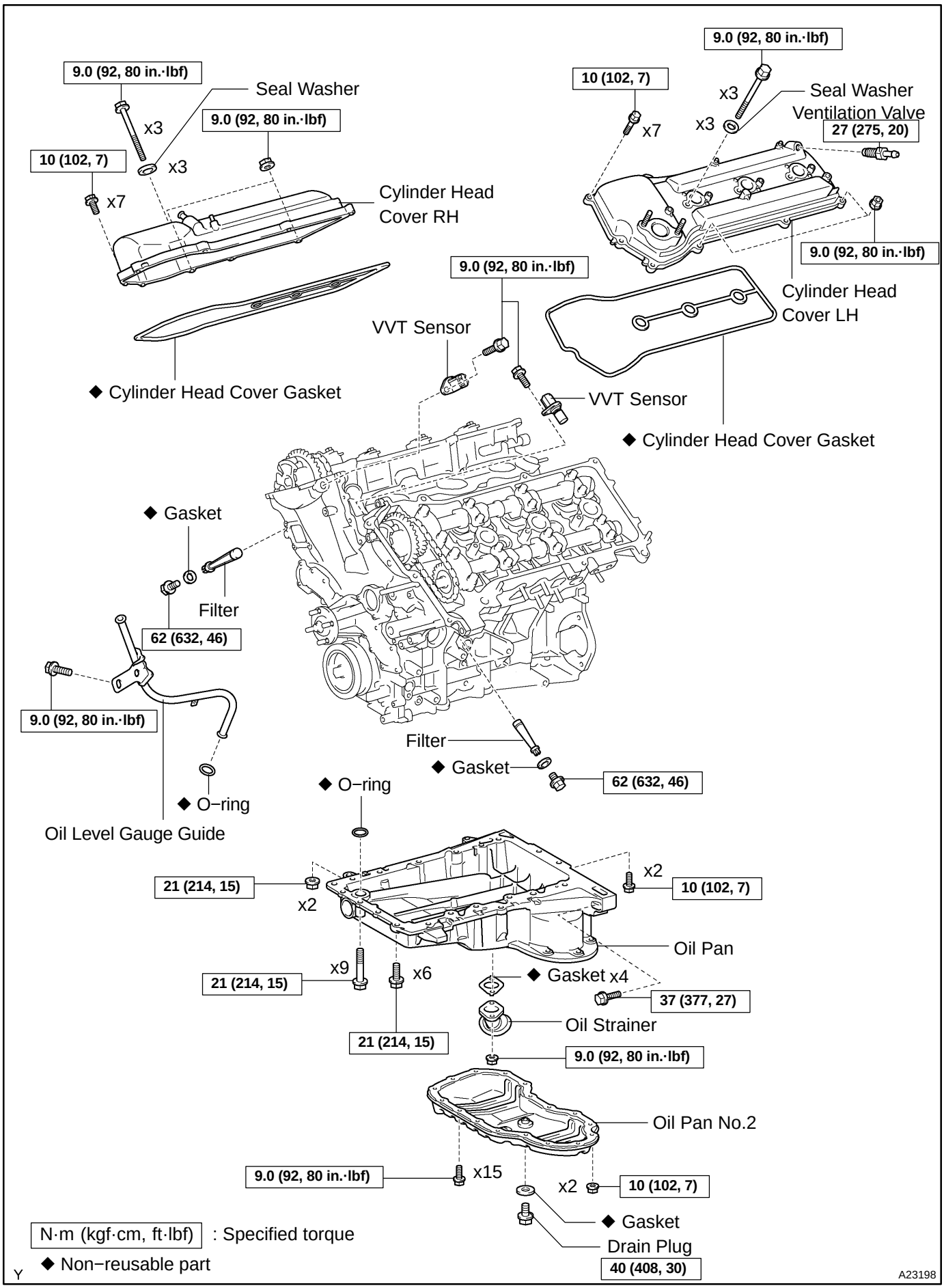
9.0 (92, 80 in.·lbf)
Seal Washer
x3
9.0 (92, 80 in.·lbf)
10 (102, 7)
x3
x7
Cylinder Head Cover RH
◆ Cylinder Head Cover Gasket
9.0 (92, 80 in.·lbf)
10 (102, 7)
x3
x7
x3
Seal Washer
Ventilation Valve
27 (275, 20)
9.0 (92, 80 in.·lbf)
Cylinder Head Cover LH
9.0 (92, 80 in.·lbf)
VVT Sensor
VVT Sensor
◆ Cylinder Head Cover Gasket
◆ Gasket
Filter
62 (632, 46)
9.0 (92, 80 in.·lbf)
◆ O−ring
Oil Level Gauge Guide
Filter
◆ Gasket
62 (632, 46)
◆ O−ring
21 (214, 15)
x2
x2
10 (102, 7)
Oil Pan
x9
21 (214, 15)
x6
21 (214, 15)
◆ Gasket x4
37 (377, 27)
Oil Strainer
9.0 (92, 80 in.·lbf)
Oil Pan No.2
9.0 (92, 80 in.·lbf)
x15
x2
10 (102, 7)
◆ Gasket
Drain Plug
40 (408, 30)
N·m (kgf·cm, ft·lbf) : Specified torque
◆ Non−reusable part
Y
A23198

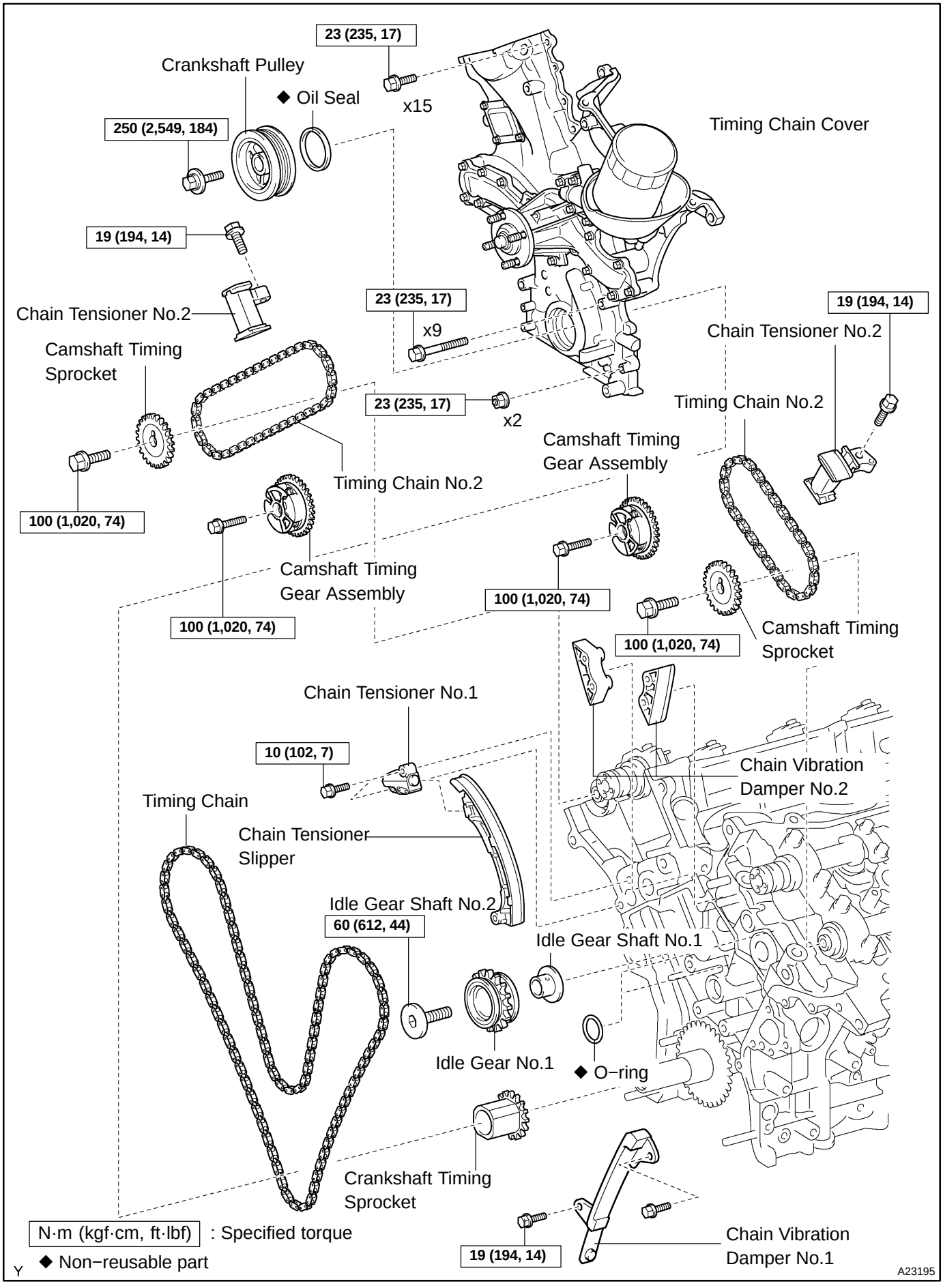
23 (235, 17)
Crankshaft Pulley
◆ Oil Seal
x15
250 (2,549, 184)
Timing Chain Cover
19 (194, 14)
Chain Tensioner No.2
23 (235, 17)
x9
19 (194, 14)
Chain Tensioner No.2
Camshaft Timing Sprocket
23 (235, 17)
x2
Timing Chain No.2
Camshaft Timing Gear Assembly
100 (1,020, 74)
Timing Chain No.2
Camshaft Timing Gear Assembly
100 (1,020, 74)
100 (1,020, 74)
100 (1,020, 74)
Camshaft Timing Sprocket
Chain Tensioner No.1
10 (102, 7)
Chain Vibration Damper No.2
Timing Chain
Chain Tensioner Slipper
Idle Gear Shaft No.2
60 (612, 44)
Idle Gear Shaft No.1
Idle Gear No.1
◆ O−ring
Crankshaft Timing Sprocket
19 (194, 14)
Chain Vibration Damper No.1
N·m (kgf·cm, ft·lbf) : Specified torque
◆ Non−reusable part
Y
A23195

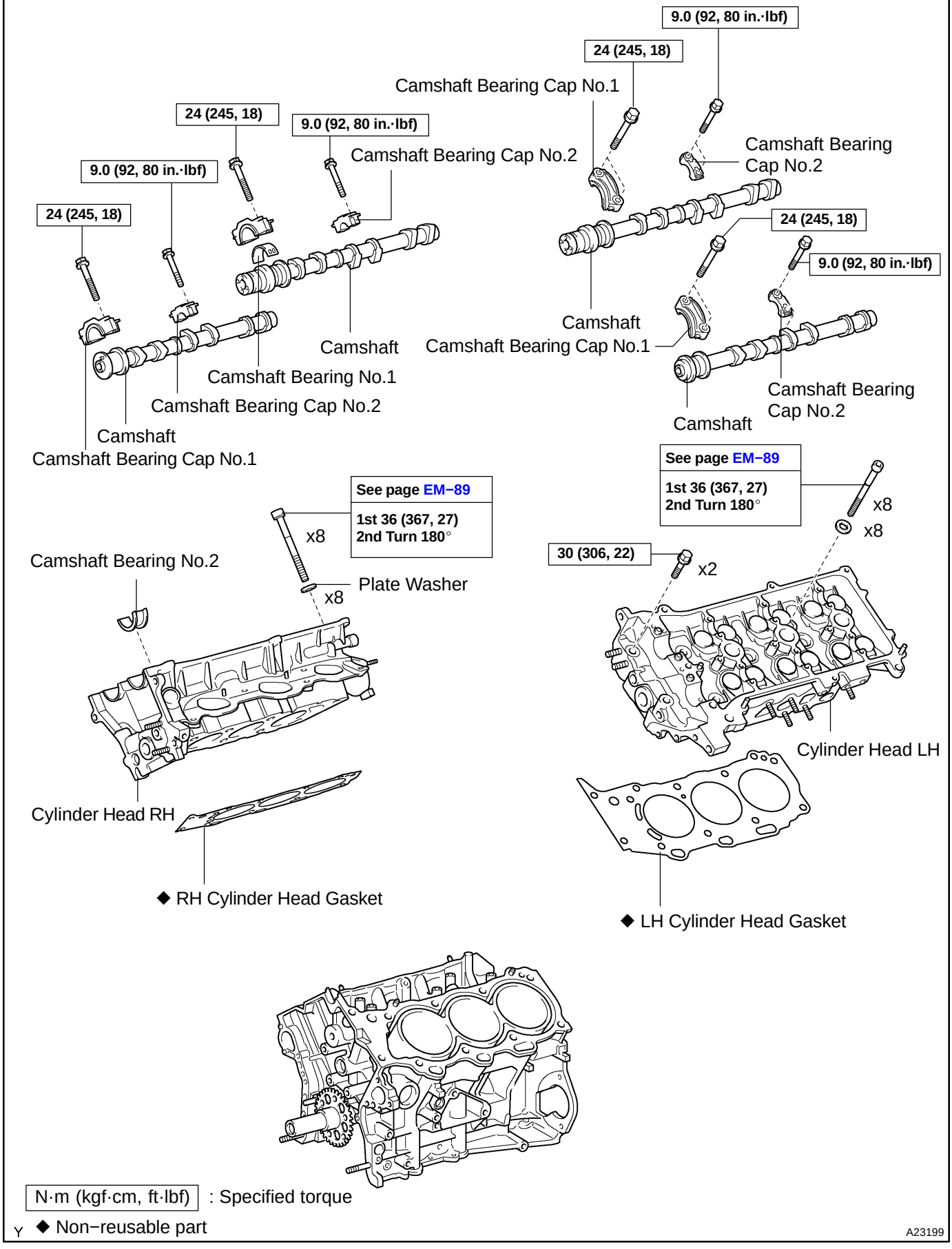
9.0 (92, 80 in.·lbf)
24 (245, 18)
Camshaft Bearing Cap No.1
Camshaft Bearing Cap No.2
24 (245, 18)
9.0 (92, 80 in.·lbf)
9.0 (92, 80 in.·lbf)
24 (245, 18)
Camshaft
Camshaft Bearing No.1
Camshaft Bearing Cap No.2
Camshaft
Camshaft Bearing Cap No.1
24 (245, 18)
9.0 (92, 80 in.·lbf)
Camshaft
Camshaft Bearing Cap No.1
Camshaft Bearing Cap No.2
Camshaft
See page EM−89
1st 36 (367, 27)
2nd Turn 180°
x8
Camshaft Bearing No.2
Plate Washer
x8
See page EM−89
1st 36 (367, 27)
2nd Turn 180°
x8
x8
30 (306, 22)
x2
Cylinder Head LH
Cylinder Head RH
◆ RH Cylinder Head Gasket
◆ LH Cylinder Head Gasket
N·m (kgf·cm, ft·lbf) : Specified torque
◆ Non−reusable part
A23199

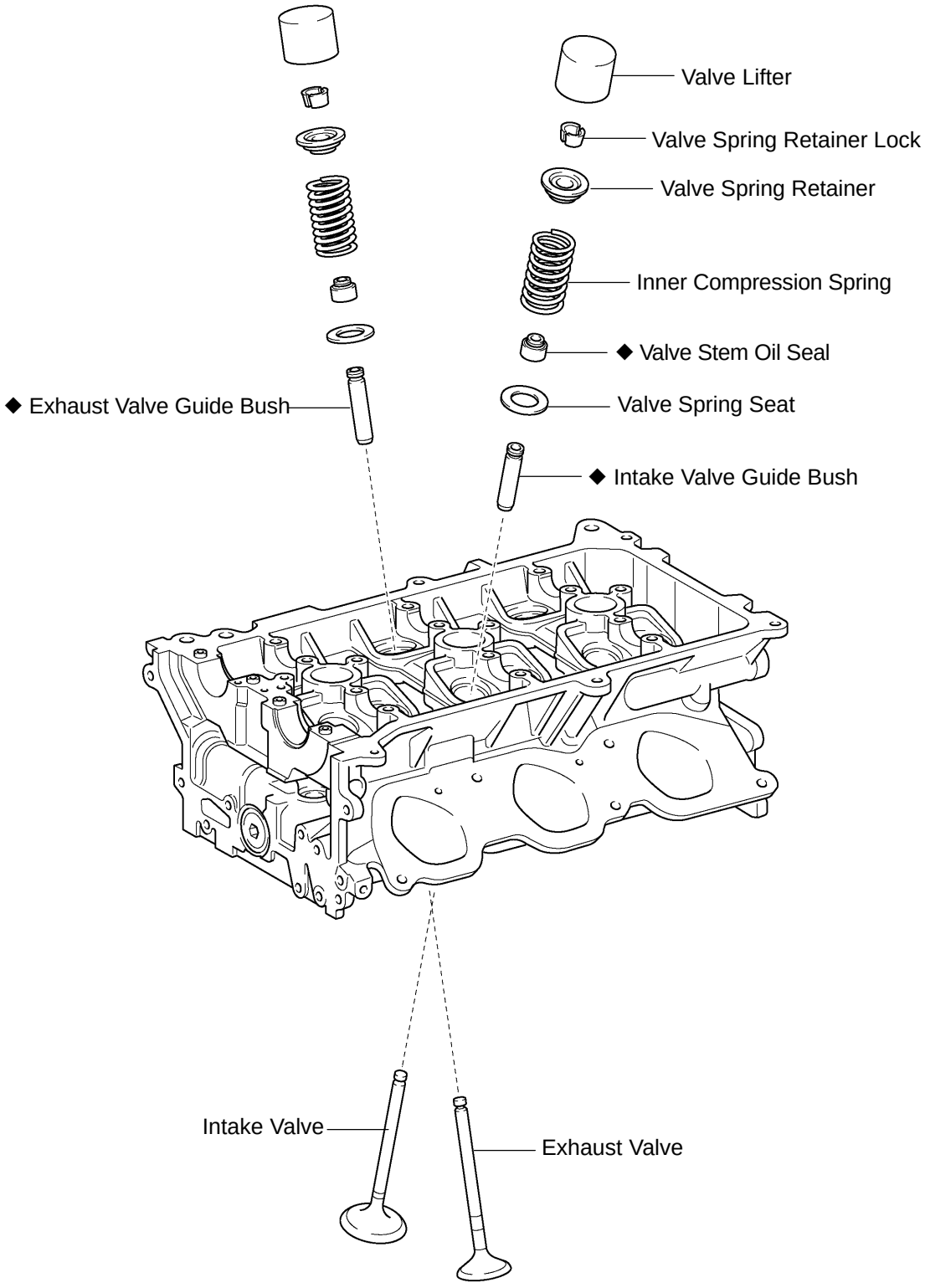

◆ Non−reusable part

A22923

EM1XQ−01

DISASSEMBLY

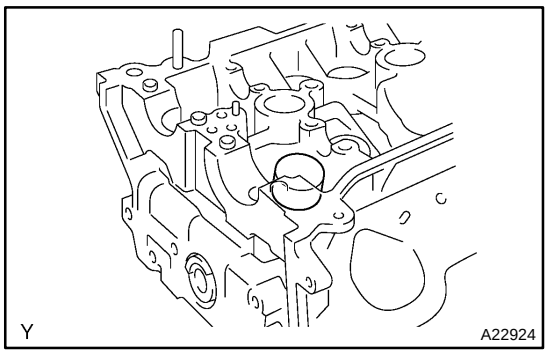

1. REMOVE VALVE LIFTER

HINT:

Arrange the valve lifter in the correct order.

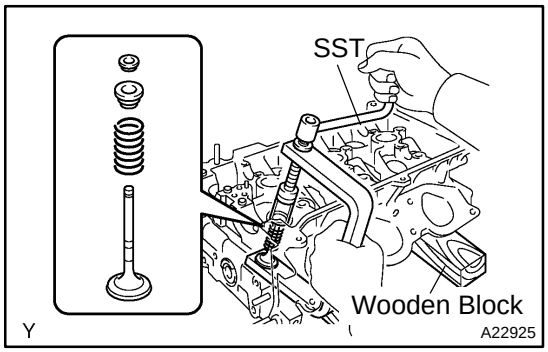

2. REMOVE VALVE

HINT:

Arrange the valves, inner compression springs, valve spring retainers and valve spring retainer locks in the correct order.

(a) Place the cylinder head on a wooden block.

(b) Using SST, compress the inner compression spring and remove the 2 valve spring retainer locks.
SST 09202−70020 (09202−00010)

(c) Remove the valve, inner compression spring, valve spring and valve spring retainer.

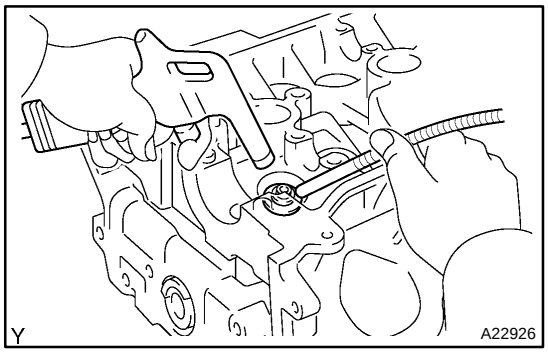

3. REMOVE VALVE SPRING SEAL

Using compressed air and a magnetic finger, remove the valve spring seat by blowing air.

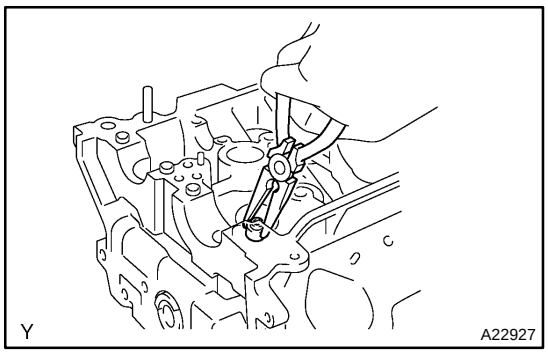

4. REMOVE VALVE STEM OIL SEAL

Using needle−nose pliers, remove the valve stem oil seal.

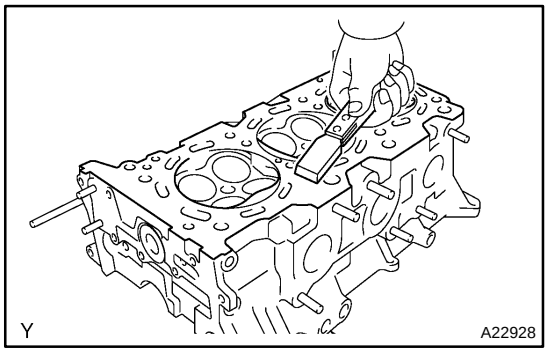

5. CLEAN CYLENDER HEAD

(a) Using a gasket scraper, remove all the gasket material from the cylinder block contact surface.

NOTICE:

Be careful not to scratch the cylinder block contact surface.

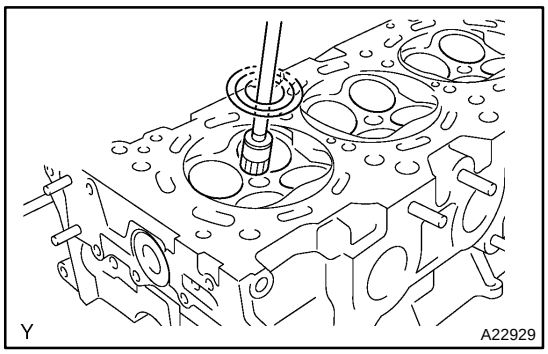

(b) Using a wire brush, remove all the carbon from the combustion chambers.

NOTICE:

Be careful not to scratch the combustion chambers.

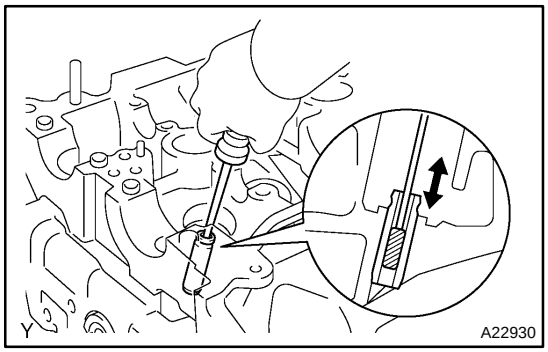

(c) Using a valve guide bushing brush and solvent, clean all the valve guide bushes.

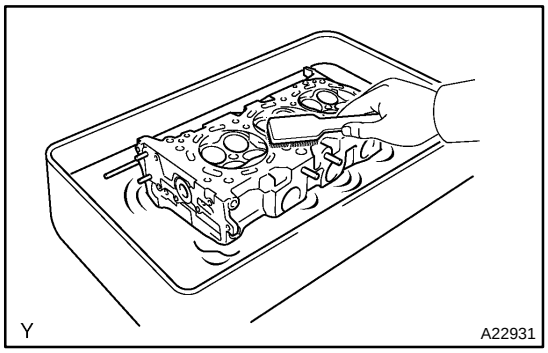

(d) Using a soft brush and solvent, thoroughly clean the cylinder head.

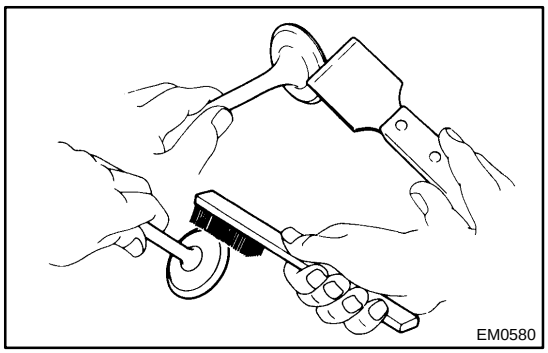

6. CLEAN VALVE

(a) Using a gasket scraper, chip off any carbon from the valve head.

(b) Using a wire brush, thoroughly clean the valve.

EM1XR−01

INSPECTION

1. INSPECT CYLINDER HEAD

(a) Inspect flatness.

Using a precision straight edge and feeler gauge, measure the flatness of the contact surfaces of the cylinder block and manifolds.

Maximum warpage: 0.10 mm (0.0039 in.)

If warpage is greater than the maximum, replace the cylinder head.

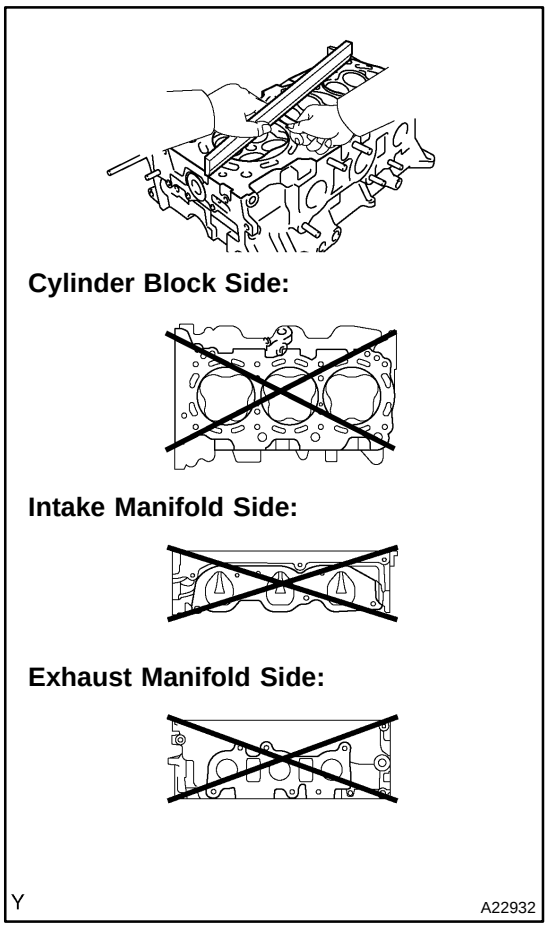

(b) Inspect cranks.

Using a dye penetrant, check the combustion chamber, intake ports, exhaust ports and cylinder block surface for cracks.

If cracked, replace the cylinder head.

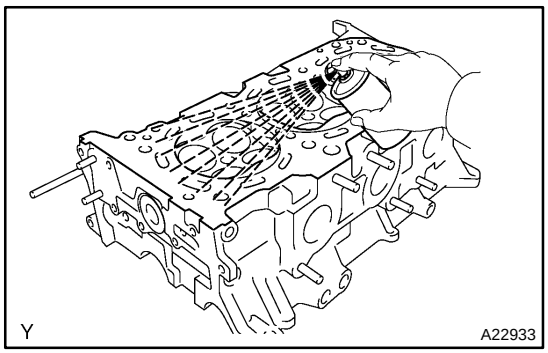

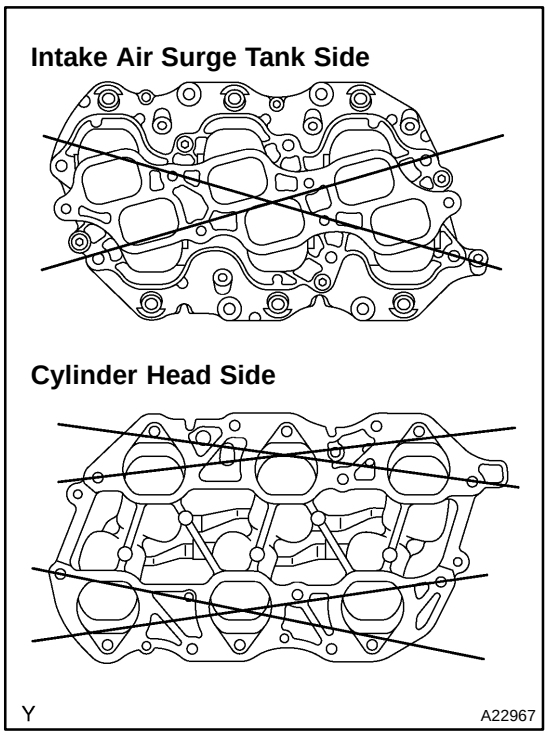

2. INSPECT INTAKE MANIFOLD FOR FLATNESS

Using a precision straight edge and feeler gauge, measure the flatness of the contact surfaces of the cylinder head and intake air surge tank.

Maximum warpage:

Intake air surge tank side: 0.8 mm (0.031 in.)

Cylinder head side: 0.2 mm (0.008 in.)

If warpage is greater than the maximum, replace the intake manifold.

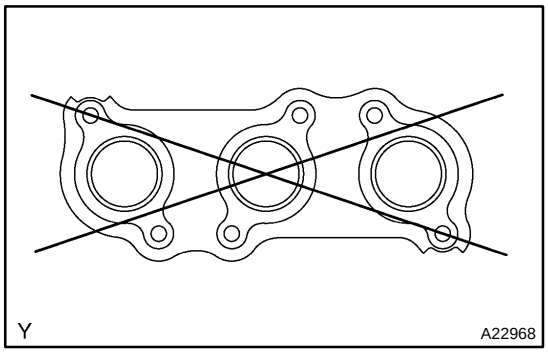

3. INSPECT EXHAUST MANIFOLD FOR FLATNESS

Using a precision straight edge and feeler gauge, measure the flatness of the contact surface the cylinder head.

Maximum warpage: 0.7 mm (0.028 in.)

If warpage is greater than the maximum, replace the exhaust manifold.

HINT:

Maximum warpage of each installation surface:

0.3 mm (0.012 in.)

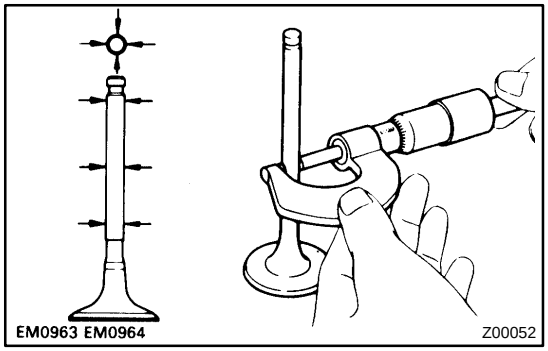

4. INSPECT VALVE

(a) Inspect valve stem diameter.

Using a micrometer, measure the diameter of the valve stem.

Valve stem diameter:

Intake	5.470 to 5.485 mm (0.2154 to 0.2159 in.)
Exhaust	5.465 to 5.480 mm (0.2152 to 0.2158 in.)

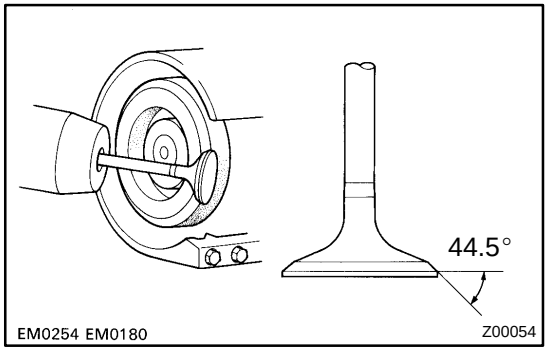

(b) Inspect valve face angle.

(1) Grind the valve enough to remove pits and carbon.

(2) Check that the valve is ground to the correct valve face angle.

Valve face angle: 44.5°

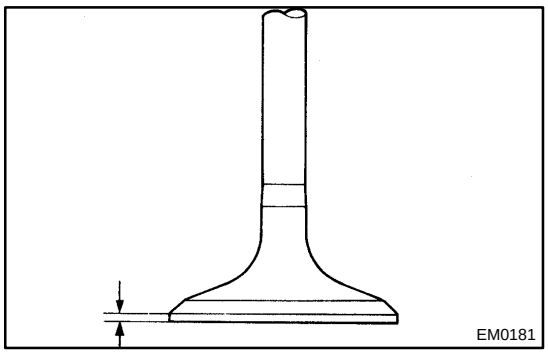

(c) Inspect valve head margin thickness.
Using vernier calipers, check the valve head margin thickness.
Standard margin thickness: 1.0 mm (0.039 in.)
Minimum margin thickness: 0.5 mm (0.020 in.)
If the margin thickness is less than the minimum, replace the valve.

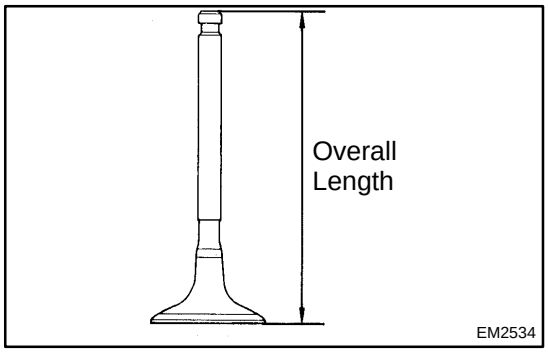

(d) Inspect overall length.
Using vernier calipers, check the overall length.
Standard overall length:

Intake	106.95 mm (4.2106 in.)
Exhaust	105.80 mm (4.1654 in.)

Minimum overall length:

Intake	106.40 mm (4.1890 in.)
Exhaust	105.30 mm (4.1457 in.)

If the overall length is less than the minimum, replace the valve.

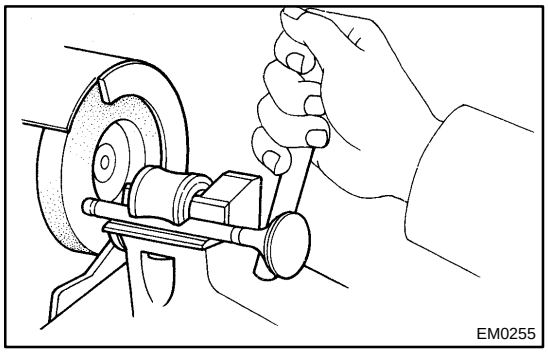

(e) Inspect valve stem tip.
Check the surface of the valve stem tip for wear.
NOTICE:
Do not grind off more than the minimum length.
If the valve stem tip is worn, resurface the tip with a grinder or replace the valve.

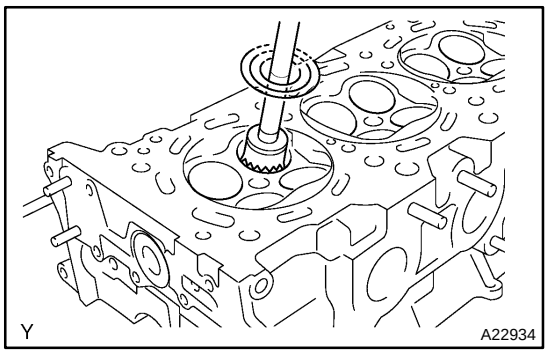

5. CLEAN VALVE SEAT
(a) Using a 45° carbide cutter, resurface the valve seats.
(b) Clean the valve seats.

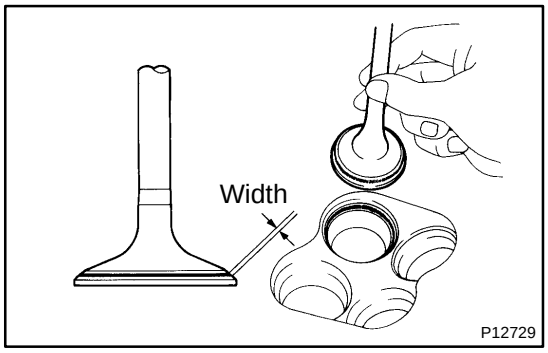

6. INSPECT VALVE SEAT
(a) Apply a light coat of prussian blue (or white lead) to the valve face.
(b) Lightly press the valve against the valve seat.
NOTICE:
Do not rotate the valve.
(c) Check the valve face and seat according to the following procedure.
(1) If prussian blue (or white lead) appears around the entire face, the valve is centered.

If not, replace the valve.

(2) If the prussian blue (or white lead) appears around the entire valve seat, the guide and face are centered.

If not, resurface the valve seat.

(3) Check that the seat contacts the middle of the valve face with the width below.

Standard width: 1.0 to 1.4 mm (0.039 to 0.055 in.)

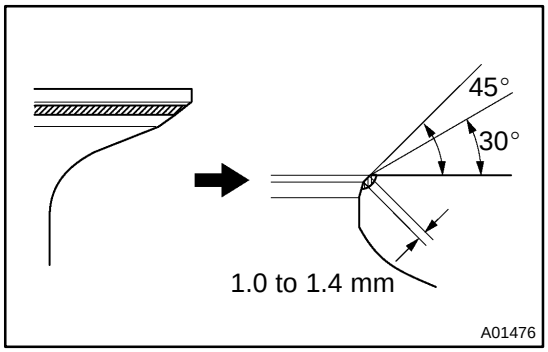

7. REPAIR VALVE SEAT

NOTICE:

Take off a cutter gradually to make the intake valve seat smooth.

(a) If the seating is too high to the valve face, use 30° and 45° cutters to correct the seat.

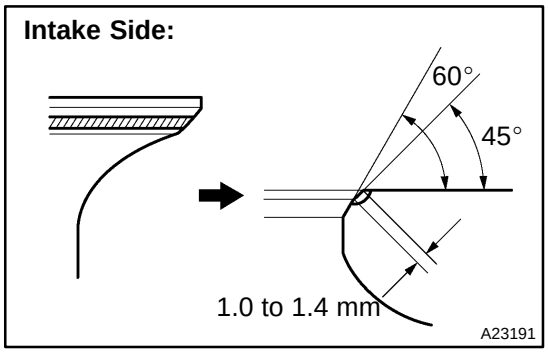

(b) Intake side:
If the seating is too low to the valve face, use 60° and 45° cutters to correct the seat.

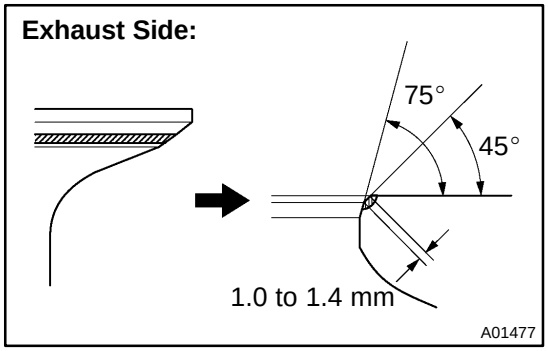

(c) Exhaust side:
If the seating is too low to the valve face, use 75° and 45° cutters to correct the seat.

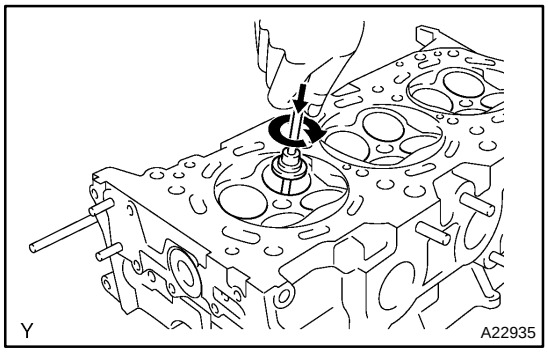

(d) Handrub the valve and valve seat with an abrasive compound.

(e) After handrubbing, clean the valve and valve seat.

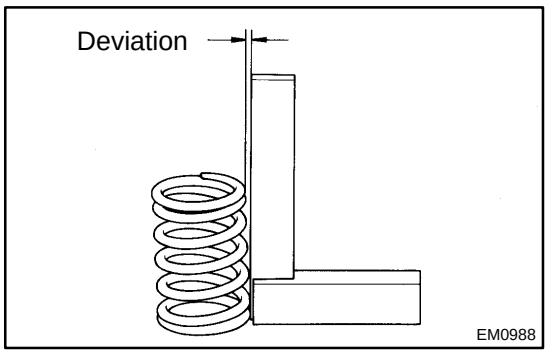

8. INSPECT INNER COMPRESSION SPRING

(a) Inspect squareness.
Using a steel square, measure the squareness of the inner compression spring.
Maximum deviation: 2.0 mm (0.079 in.)

If the deviation is greater than the maximum, replace the inner compression spring.

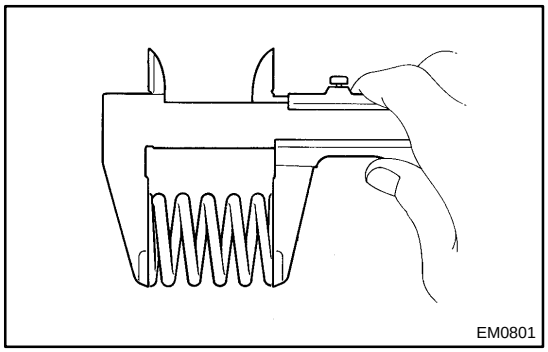

(b) Inspect free length.
Using vernier calipers, measure the free length of the inner compression spring.
Free length: 47.80 mm (1.8819 in.)

If the free length is not as specified, replace the inner compression spring.

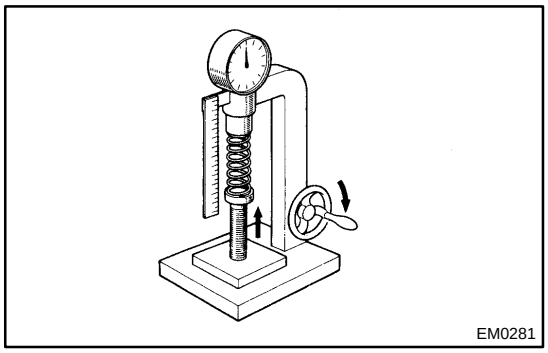

(c) Inspect tension.
Using a spring tester, measure the tension of the inner compression spring at the specified installed length.
Installed tension:
186.2 to 205.8 N (19.0 to 21.0 kgf, 41.9 to 46.3 lbf) at 33.3 mm (1.311 in.)

If the installed tension is not as specified, replace the inner compression spring.

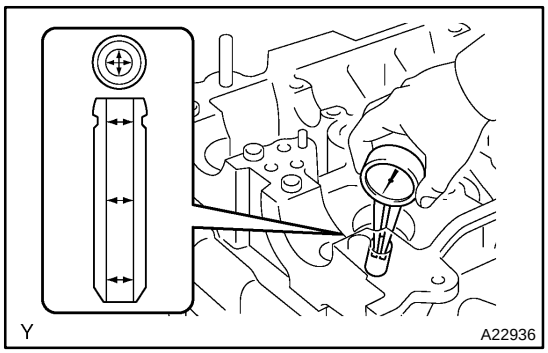

9. INSPECT VALVE GUIDE BUSH OIL CLEARANCE

(a) Using a caliper gauge, measure the inside diameter of the valve guide bush.
Inside diameter:
5.51 to 5.53 mm (0.2169 to 0.2177 in.)

(b) Subtract the valve stem diameter measurement (Step 8) from the valve guide bush inside diameter measurement.
Standard oil clearance:

Intake	0.025 to 0.060 mm (0.0010 to 0.0024 in.)
Exhaust	0.030 to 0.065 mm (0.0012 to 0.0026 in.)

Maximum oil clearance:

Intake	0.08 mm (0.0031 in.)
Exhaust	0.10 mm (0.0039 in..)

If the oil clearance is greater than the maximum, replace the valve and valve guide bush.

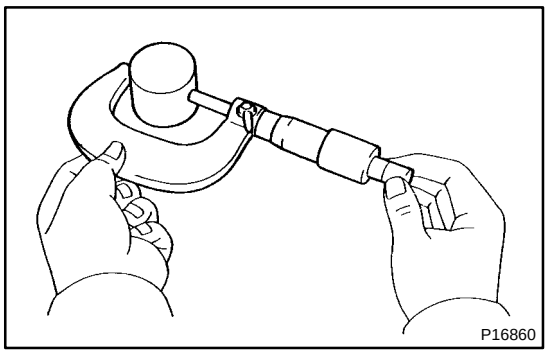

10. INSPECT VALVE LIFTER

Using a micrometer, measure the valve lifter diameter.

Valve lifter diameter:
30.966 to 30.976 mm (1.2191 to 1.2195 in.)

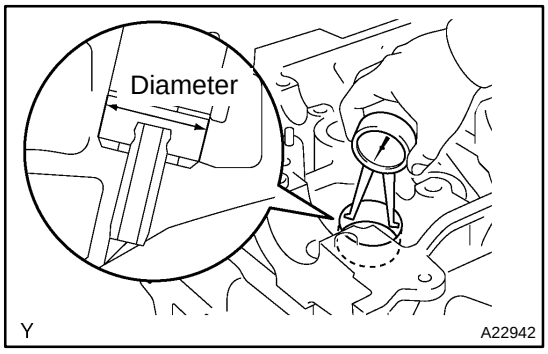

11. INSPECT VALVE LIFTER OIL CLEARANCE

(a) Using a caliper gauge, measure the lifter bore diameter of the cylinder head.

Lifter bore diameter:
31.009 to 31.025 mm (1.2208 to 1.2215 in.)

(b) Subtract the valve lifter diameter measurement (Step 10) from the lifter bore diameter measurement.

Standard oil clearance:
0.033 to 0.059 mm (0.0013 to 0.0023 in.)
Maximum oil clearance: 0.08 mm (0.0031 in.)

If the oil clearance is greater than the maximum, replace the valve lifter.

If necessary, replace the cylinder head.

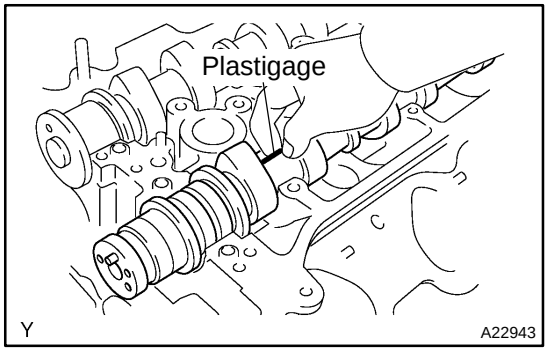

12. INSPECT CAMSHAFT OIL CLEARANCE

(a) Clean the camshaft bearing caps, camshaft bearings and camshaft journals.

(b) Install the camshaft bearing (See page EM−89).

(c) Place the camshaft on the cylinder head.

(d) Lay a strip of Plastigage across each of the camshaft journals.

(e) Install the camshaft bearing caps (See page EM−89).

NOTICE:
Do not turn the camshafts.

(f) Remove the camshaft bearing caps (See page EM−62).

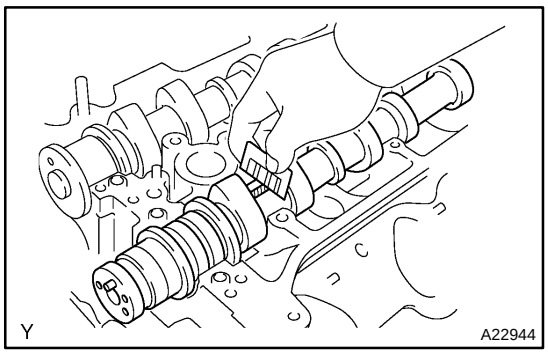

(g) Measure the Plastigage at its widest point.

Standard oil clearance (Cylinder head RH):

No. 1 (Intake)	0.008 to 0.038 mm (0.0003 to 0.0015 in.)
No. 1 (Exhaust)	0.040 to 0.079 mm (0.0016 to 0.0031 in.)
Others	0.025 to 0.062 mm (0.0010 to 0.0024 in.)

Standard oil clearance (Cylinder head LH):

No. 1	0.040 to 0.079 mm (0.0016 to 0.0031 in.)
Others	0.025 to 0.062 mm (0.0010 to 0.0024 in.)

Maximum oil clearance (Cylinder head RH):

No. 1 (Intake)	0.07 mm (0.0028 in.)
Others	0.10 mm (0.0039 in.)

Maximum oil clearance (Cylinder head LH):
0.10 mm (0.0039 in.)

If the oil clearance is greater than the maximum, replace the camshaft bearings and/or camshaft.

If necessary, replace the camshaft bearing caps and cylinder head together.

Reference:

Cylinder head journal bore diameter	40.009 to 40.017 mm (1.5752 to 1.5755 in.)
Camshaft bearing center wall thickness (Mark "2")	2.004 to 2.008 mm (0.0789 to 0.0791 in.)
Camshaft journal diameter	35.971 to 35.985 mm (1.4165 to 1.4167 in.)

(h) Remove the Plastigage completely.

(i) Remove the camshafts.

(j) Remove the camshaft bearing.

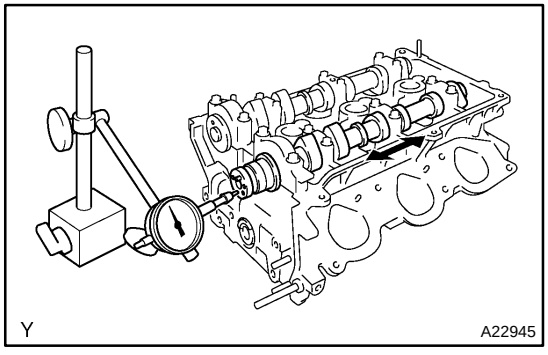

13. INSPECT CAMSHAFT THRUST CLEARANCE

(a) Install the camshafts (See page EM−89).

(b) Using a dial indicator, measure the thrust clearance while moving the camshaft back and forth.

Standard thrust clearance:
0.04 to 0.09 mm (0.0016 to 0.0035 in.)
Maximum thrust clearance: 0.11 mm (0.0043 in.)

If the thrust clearance is greater than the maximum, replace the camshafts.

If necessary, replace the camshaft bearing caps and cylinder head as a set.

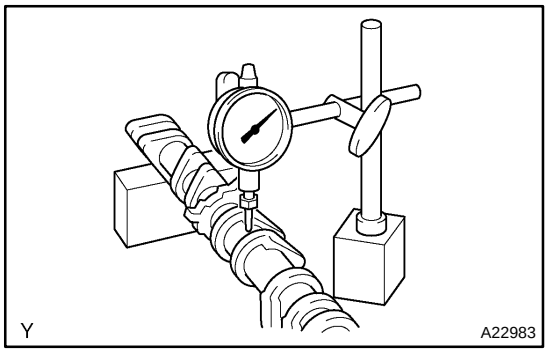

14. INSPECT CAMSHAFT

(a) Inspect the camshaft for runout.

(1) Place the camshaft on V−blocks.

(2) Using a dial indicator, measure the runout at the center journal.

Maximum runout: 0.06 mm (0.0024 in.)

If the runout is greater than the maximum, replace the camshaft .

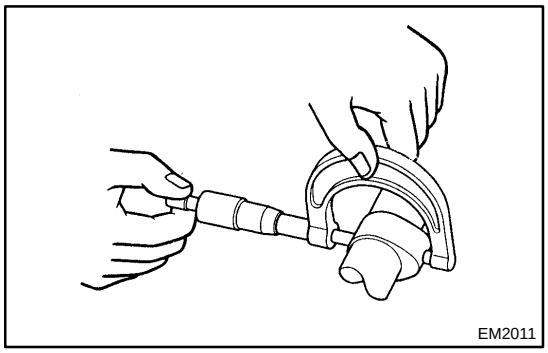

(b) Inspect the cam lobes.

Using a micrometer, measure the cam lobe height.

Standard cam lobe height:

Intake: 44.168 to 44.268 mm (1.7389 to 1.7428 in.)

Exhaust: 44.580 to 44.680 mm (1.7551 to 1.7591 in.)

Minimum cam lobe height:

Intake: 44.018 mm (1.7330 in.)

Exhaust: 44.430 mm (1.7492 in.)

If the cam lobe height is less than the minimum, replace the camshaft.

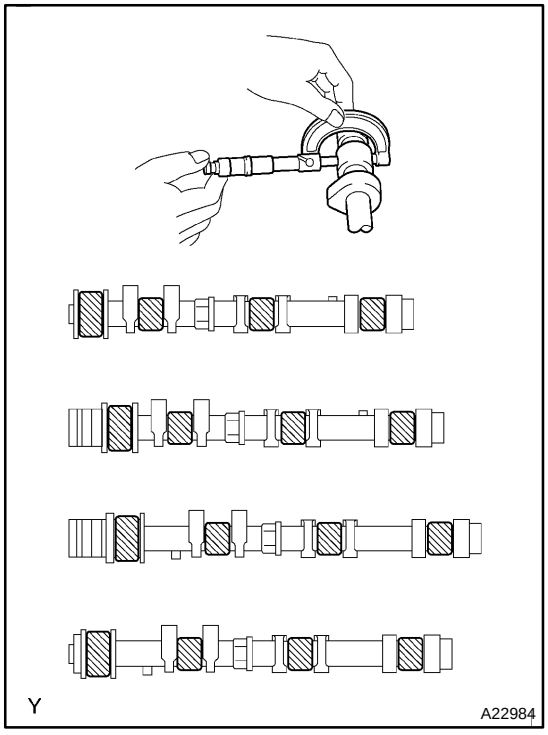

(c) Inspect the camshaft journals.

Using a micrometer, measure the journal diameter.

No. 1 journal diameter:

35.971 to 35.985 mm (1.4162 to 1.4167 in.)

Other journal diameter:

22.959 to 22.975 mm (0.9039 to 0.9045 in.)

If the journal diameter is not as specified, check the oil clearance.

15. INSPECT CAMSHAFT TIMING GEAR

(a) Fix the intake camshaft with a vise.

NOTICE:

Be careful not to damage the camshaft.

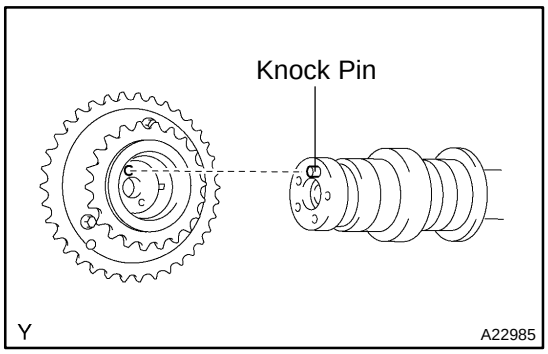

(b) Align the knock pin hole in the camshaft timing gear assembly with the knock pin of the camshaft, and install the camshaft timing gear assembly with the bolt.
Torque: 100 N·m (1,020 kgf·cm, 74 ft·lbf)

(c) Confirm that the camshaft timing gear assembly is locked.

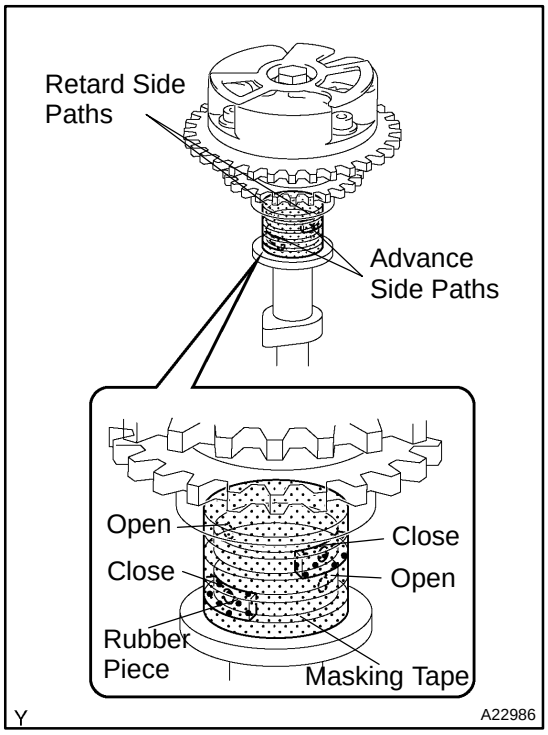

(d) Release the lock pin.

(1) Cover the 4 oil paths of the cam journal with masking tape as shown in the illustration.

HINT:
One of the 2 grooves on the cam journal is for retards (upper) and the other is for advances (lower). Each groove has 2 oil paths. Plug one of the oil paths for each groove with rubber pieces before wrapping the cam journal with tape.

(2) Prick a hole in the tape placed on the advance side path. Prick a hole in the retard side path, on the opposite side to that of the advance side path, as shown in the illustration.

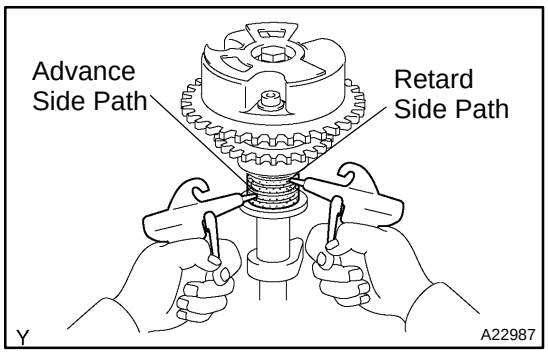

(3) Apply about 200 kPa (2.0 kgf/cm^2) of air pressure to the two broken paths (the advance side path and the retard side path).

NOTICE:
Cover the paths with a shop rag to avoid oil splashing.

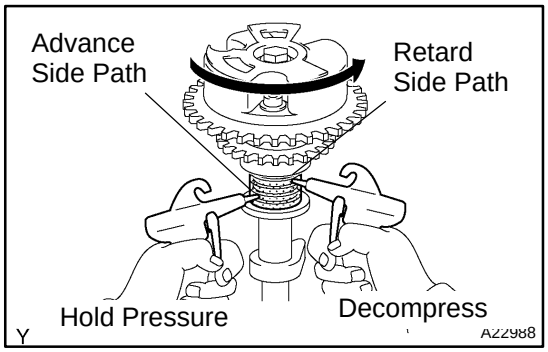

(4) Confirm that the camshaft timing gear assembly rotates in the advance direction when reducing the air pressure applied to the retard path.

HINT:
When the lock pin is released, the camshaft timing gear rotates in the advance direction.

(5) When the camshaft timing gear comes to the most advanced position, release the air pressure from the retard side path, and then release the air pressure from the advance side path.

NOTICE:

The camshaft timing assembly gear occasionally shifts to the retard side abruptly if the air pressure of the advanced side path is released first. This often results in breakage of the lock pin.

(e) Check for smooth revolution.

Allow the camshaft timing gear assembly to turn back and forth at any position, except where the lock pin meets at the most retarded angle. Check the movable range and that there is no disturbance.

Standard: Moves smoothly in a range of about 31 °

NOTICE:

Be sure to perform this check by hand, instead of air pressure.

(f) Check the lock in the most retarded position.

Confirm that the camshaft timing gear assembly is locked at the most retarded position.

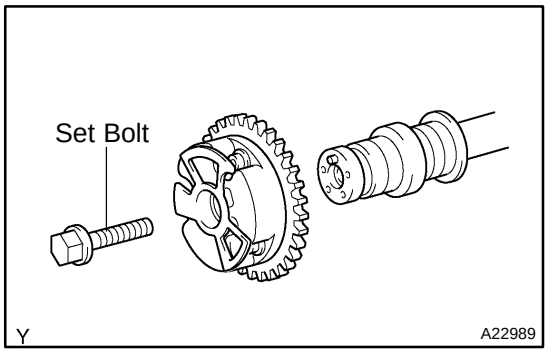

(g) Remove the set bolt and camshaft timing gear assembly.

NOTICE:

Be sure not to remove the other 3 bolts.

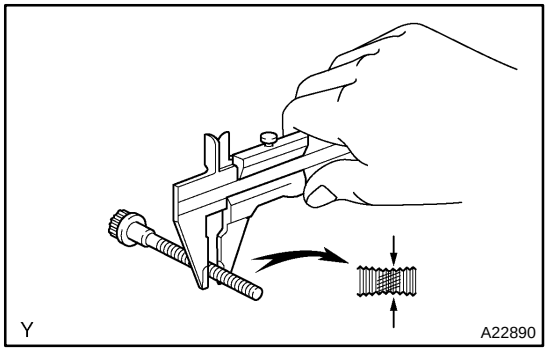

16. INSPECT CYLINDER HEAD SET BOLT

Using a vernier caliper, measure the outside thread diameter of the bolt.

Standard outside diameter:
10.85 to 11.00 mm (0.4272 to 0.4331 in.)
Minimum outside diameter:
10.7 mm (0.421 in.)

EM1XU−01

INSTALLATION

1. INSTALL CYLINDER HEAD GASKET

(a) Remove any old packing material (FIPG) and be careful not to drop any oil on the contact surfaces of the cylinder head and cylinder block.

(b) Install the RH cylinder head gasket.

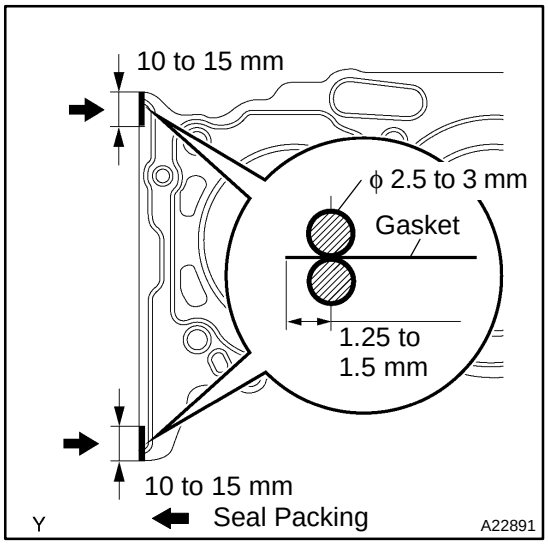

(1) Apply a continuous bead of seal packing (diameter 2.5 to 3 mm (0.098 to 0.118 in.)) to a new cylinder head gasket as shown in the illustration.

Seal packing: Part No. 08826−00080 or equivalent

NOTICE:

Install the cylinder head within 3 minutes after applying seal packing. After installing it, the cylinder head bolts must be tightened within 15 minutes. Otherwise the seal packing must be removed and reapplied.

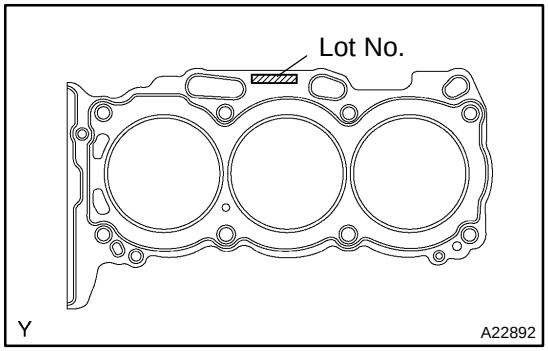

(2) Place the cylinder head gasket on the cylinder block surface with the Lot No. stamp upper side facing upward.

NOTICE:

- **Be careful of the installation direction.**
- **Place the cylinder head carefully in order not to damage the gasket with the bottom part of the head.**

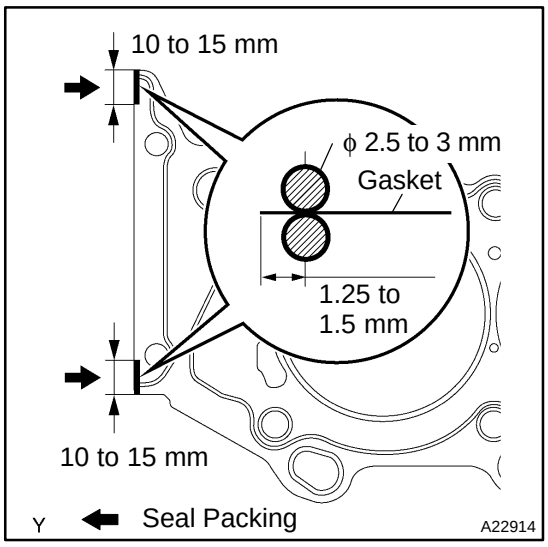

(c) Install the LH cylinder head gasket.

(1) Apply a continuous bead of seal packing (diameter 2.5 to 3 mm (0.098 to 0.118 in.)) to a new cylinder head gasket as shown in the illustration.

Seal packing: Part No. 08826−00080 or equivalent

NOTICE:

Install the cylinder head within 3 minutes after applying seal packing. After installing it, the cylinder head bolts must be tightened within 15 minutes. Otherwise the seal packing must be removed and reapplied.

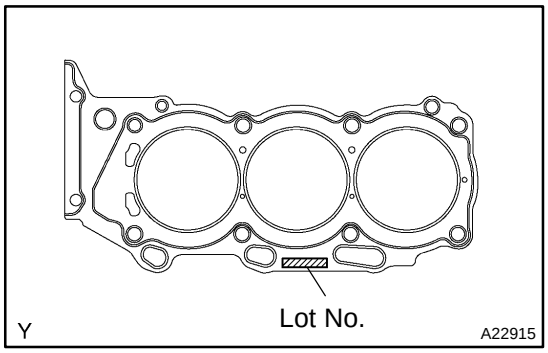

(2) Place the cylinder head gasket on the cylinder block surface with the Lot No. stamp upper sied facing upward.

NOTICE:

- **Be careful of the installation direction.**
- **Place the cylinder head carefully in order not to damage the gasket with the bottom part of the head.**

2. INSTALL CYLINDER HEAD

(a) Place the RH cylinder head on the cylinder head gasket.

(b) Install the 8 cylinder head bolts.

HINT:

- The cylinder head bolts are tightened in 2 successive steps (steps (3) and (5)).
- If any cylinder head bolt is broken or deformed, replace it.

(1) Apply a light coat of engine oil to the threads of the cylinder head bolts.

(2) Install the plate washer to the cylinder head bolt.

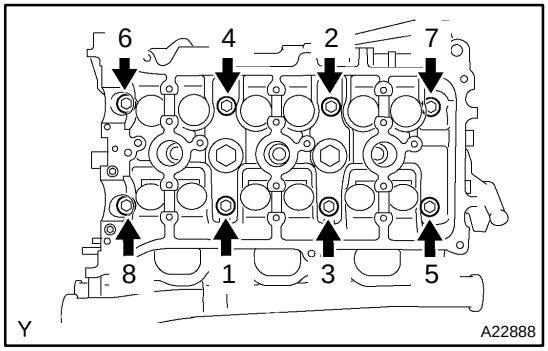

(3) Using several steps, tighten each bolt with a 10 mm bi−hexagon wrench uniformly in the sequence as shown in the illustration.

Torque: 36 N·m (367 kgf·cm, 27 ft·lbf)

If any one of the cylinder head bolts does not meet the torque specification, replace the cylinder head bolt.

NOTICE:

Do not drop the washers into the cylinder head.

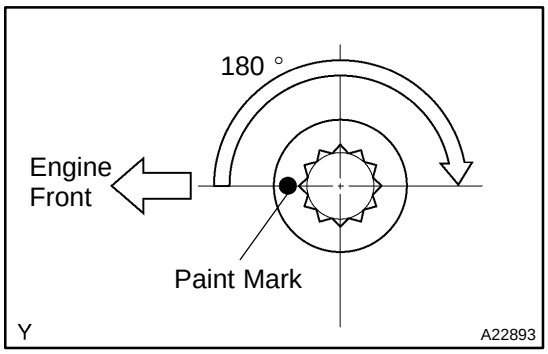

(4) Mark the front side of each cylinder head bolt with paint.
(5) Retighten the cylinder head bolts by 180 ° as shown.
(6) Check that the painted marks are now at 180 ° opposite to the engine front.

(c) Place the LH cylinder head on the cylinder head gasket.
(d) Install the 8 cylinder head bolts.

HINT:

- The cylinder head bolts are tightened in 2 successive steps (steps (3) and (5)).
- If any cylinder head bolt is broken or deformed, replace it.

(1) Apply a light coat of engine oil to the threads of the cylinder head bolts.
(2) Install the plate washer to the cylinder head bolt.

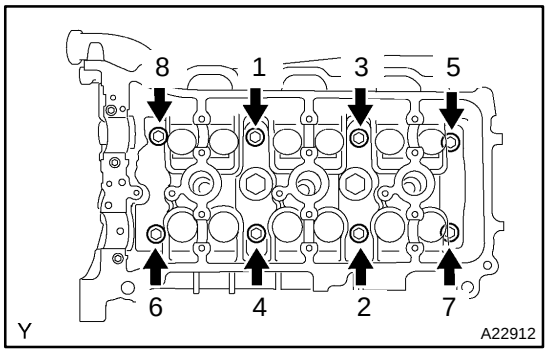

(3) Using several steps, tighten each bolt with a 10 mm bi−hexagon wrench uniformly in the sequence as shown in the illustration.

Torque: 36 N·m (367 kgf·cm, 27 ft·lbf)

If any one of the cylinder head bolts does not meet the torque specification, replace the cylinder head bolt.

NOTICE:

Do not drop the washers into the cylinder head.

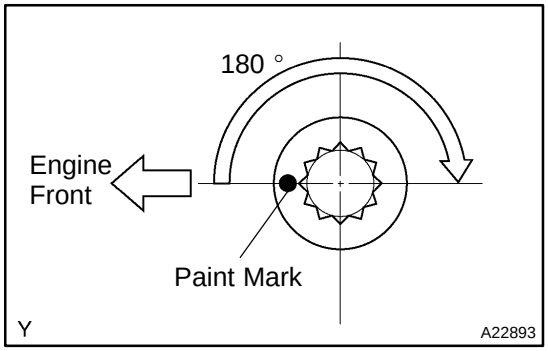

(4) Mark the front side of each cylinder head bolt with paint.
(5) Retighten the cylinder head bolts by 180 ° as shown.
(6) Check that the painted marks are now at 180 ° opposite to the engine front.

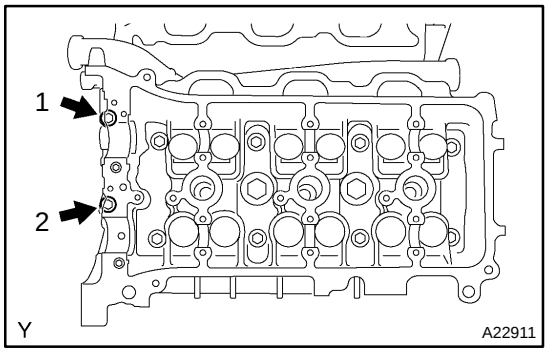

(e) Install the 2 cylinder head bolts.
(1) Apply a light coat of engine oil to the threads of the cylinder head bolts.
(2) Install the 2 cylinder head bolts. Using several steps, tighten the bolts uniformly in the sequence as shown in the illustration.

Torque: 30 N·m (306 kgf·cm, 22 ft·lbf)

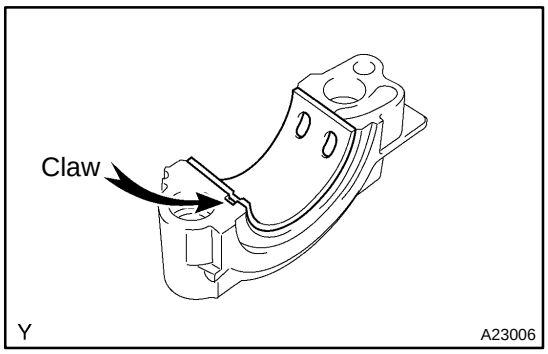

3. INSTALL CAMSHAFT BEARING NO.1

Align the bearing claw with the claw groove of the bearing cap, and push in the camshaft bearing.

NOTICE:

- **Install the bearing while aligning it with the oil hole in the bearing cap.**
- **Clean the backside of the bearing and the bearing surface of the bearing cap and prevent oil from adhering to them.**

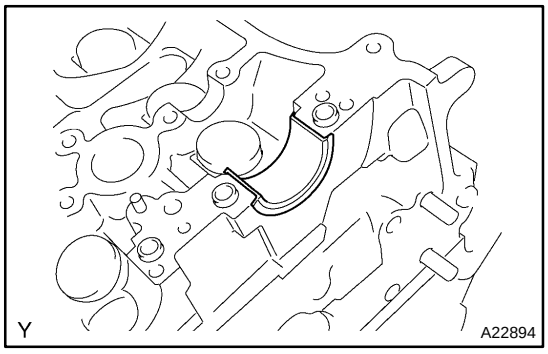

4. INSTALL CAMSHAFT BEARING NO.2

Install the camshaft bearing No. 2 to the cylinder head.

NOTICE:

Clean the backside of the bearing and the bearing surface of the cylinder head and prevent oil from adhering to them.

5. INSTALL CAMSHAFT

NOTICE:

As the thrust clearance of the camshaft is small, the camshaft must be kept level while it is being installed. If the camshaft is not kept level, the portion of the cylinder head which receives the shaft thrust may crack or be damaged, causing the camshaft to seize or break. To avoid this, the following steps should be carried out.

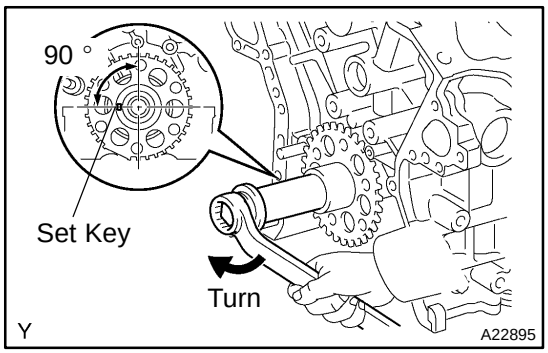

(a) Set the crankshaft position.
Using the crankshaft pulley set bolt, turn the crankshaft, and set the crankshaft set key into the left horizontal position.

NOTICE:

Having the crankshaft at the wrong angle can cause the piston head and valve head to come into contact with each other when you install the camshaft, causing damage. So always set the crankshaft at the correct angle.

(b) Apply new engine oil to the thrust portion and journal of the camshafts.

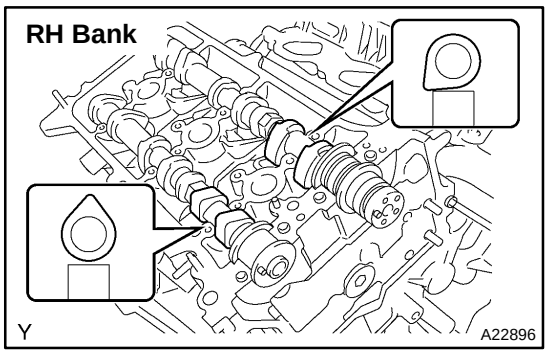

(c) Install the camshaft of the RH bank.

(1) Place the 2 camshafts onto the RH cylinder head with the cam lobes of No. 1 cylinder facing each direction as shown in the illustration.

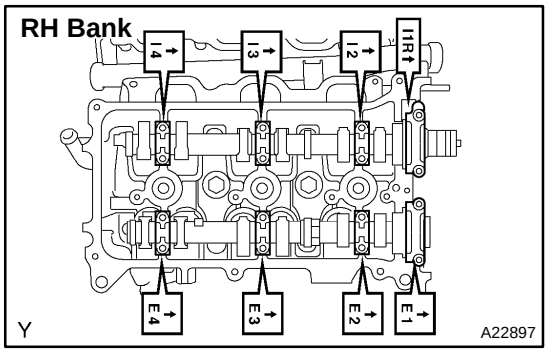

(2) Install the 8 bearing caps in their proper locations.

(3) Apply a light coat of engine oil to the threads of the bearing cap bolts.

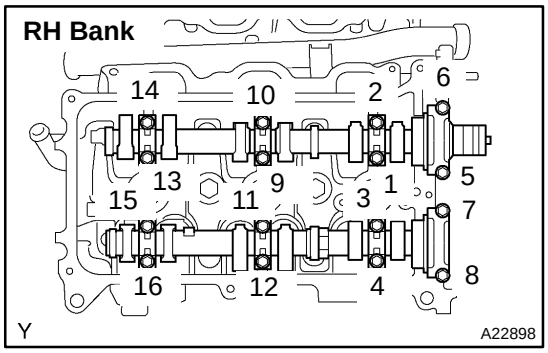

(4) Install the 16 bearing cap bolts. Using several steps, tighten the bolts uniformly in the sequence as shown in the illustration.

Torque:
9.0 N·m (92 kgf·cm, 80 in.·lbf) for 10 mm (0.39 in.) head
24 N·m (245 kgf·cm, 18 ft·lbf) for 12 mm (0.47 in.) head

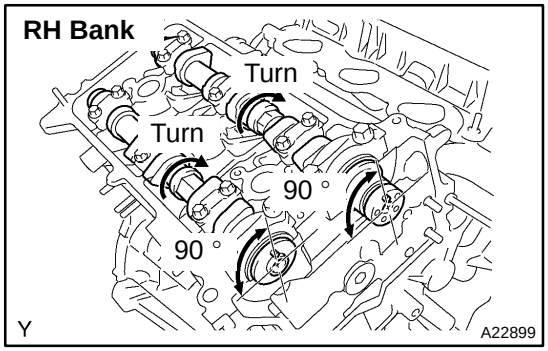

(5) Turn the camshafts clockwise with a wrench until the camshaft knock pin comes 90° position to the cylinder head.

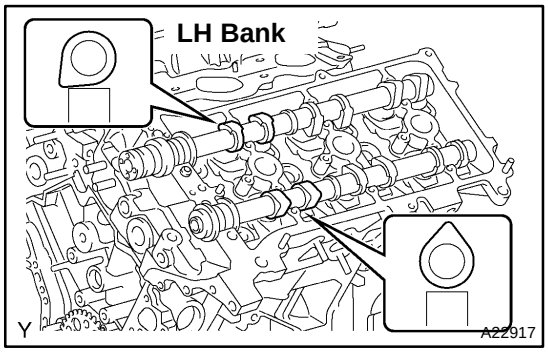

(d) Install the camshafts of the LH bank.

(1) Place the 2 camshafts onto the LH cylinder head with the cam lobes of No. 2 cylinder facing as shown in the illustration.

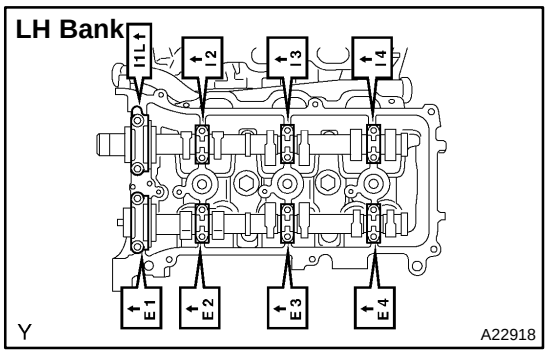

(2) Install the 8 bearing caps in their proper locations.
(3) Apply a light coat of engine oil to the threads and under the heads of the bearing cap bolts.

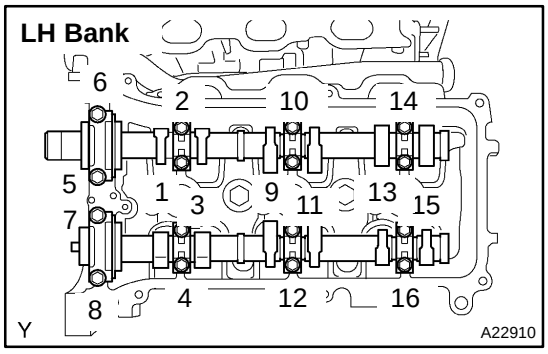

(4) Install the 16 bearing cap bolts. Using several steps, tighten the bolts uniformly in the sequence as shown in the illustration.

Torque:
9.0 N·m (92 kgf·cm, 80 in.·lbf) for 10 mm (0.39 in.) head
24 N·m (245 kgf·cm, 18 ft·lbf) for 12 mm (0.47 in.) head

6. INSTALL TIMING CHAIN (See page EM−44)
7. INSTALL TIMING CHAIN COVER (See page EM−44)
8. INSTALL OIL PAN (See page EM−44)

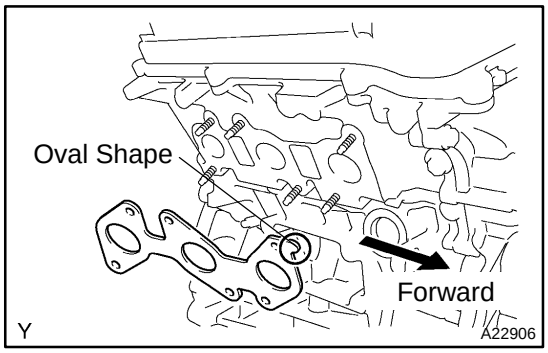

9. INSTALL EXHAUST MANIFOLD

(a) Install the RH exhaust manifold.
(1) Set a new gasket to the RH cylinder head with the oval shape facing forward.

NOTICE:
Be careful of the installation direction.

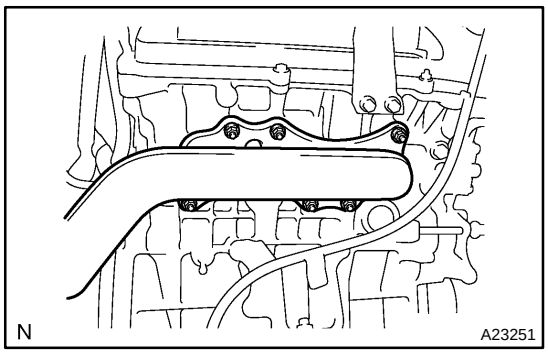

(2) Install the exhaust manifold with the 6 nuts. Tighten the nuts uniformly in several steps.
Torque: 21 N·m (214 kgf·cm, 15 ft·lbf)
(3) Connect the A/F sensor connector.
(4) Install the manifold stay with the 3 bolts.
Torque: 40 N·m (408 kgf·cm, 30 ft·lbf)

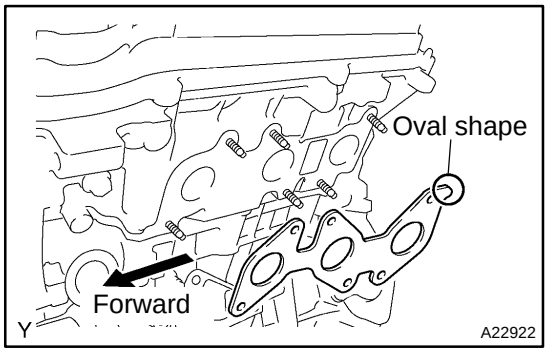

(b) Install the LH exhaust manifold.
(1) Set a new gasket to the LH cylinder head with the oval shape facing backward.

NOTICE:
Be careful of the installation direction.

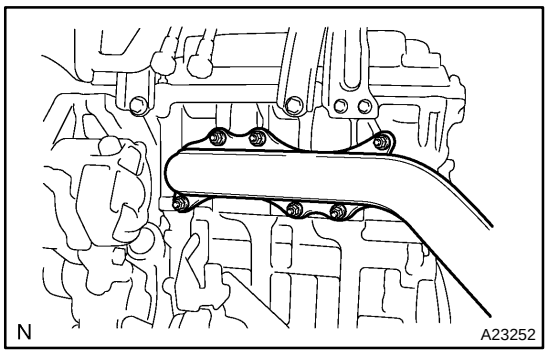

(2) Install the exhaust manifold with the 6 nuts. Tighten the nuts uniformly in several steps.
Torque: 21 N·m (214 kgf·cm, 15 ft·lbf)
(3) Connect the A/F sensor connector.
(4) Install the manifold stay with the 3 bolts.
Torque: 40 N·m (408 kgf·cm, 30 ft·lbf)

10. INSTALL RH AND LH FRONT EXHAUST PIPE
(See page EM−138)

11. INSTALL VVT SENSOR (See page IG−12)

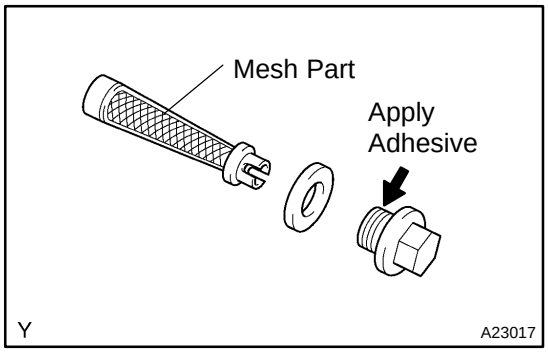

12. INSTALL OIL CONTROL VALVE FILTER
(a) Check that no foreign objects on the mesh part of the 2 filters.
(b) Install 2 new gaskets to each new plug.
(c) Insert the filters to the plugs.
(d) Apply adhesive to 2 or 3 threads of the plugs.
Adhesive: Part No. 08833−00080, THREE BOND 1344 LOCTITE 242 or equivalent
(e) Install the plugs to each cylinder head.
Torque: 62 N·m (632 kgf·cm, 46 ft·lbf)

13. INSTALL CAMSHAFT TIMING OIL CONTROL VALVE

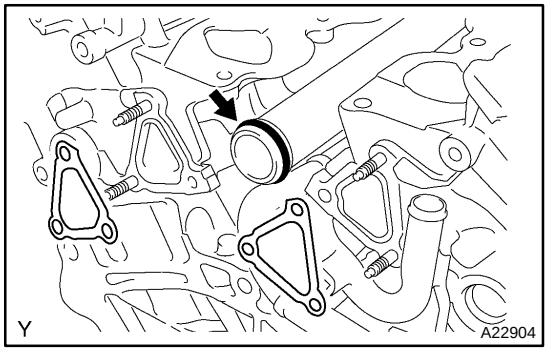

14. INSTALL WATER BY−PASS JOINT
(a) Install a new O−ring to the water outlet pipe.
(b) Apply soapy water to the O−ring.

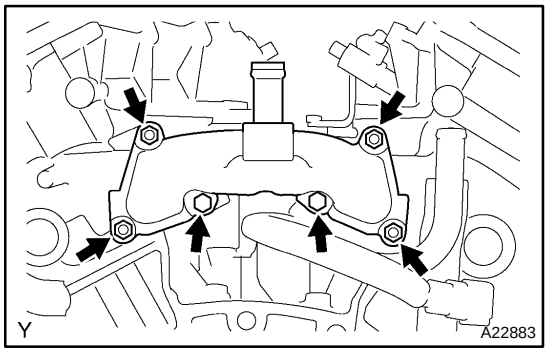

(c) Install 2 new gaskets and water by−pass joint with the 2 bolts and 4 nuts.
Torque: 9.0 N·m (92 kgf·cm, 80 in.·lbf)
(d) Connect the heater hose.
(e) Connect the engine coolant temperature sensor connector.

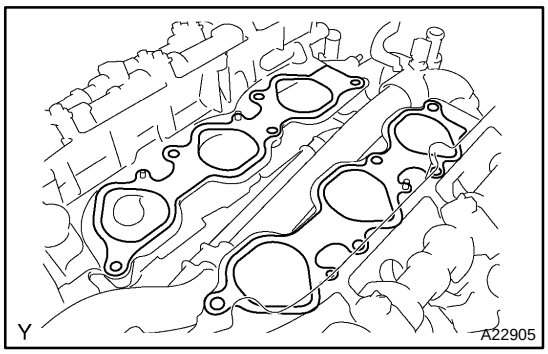

15. INSTALL INTAKE MANIFOLD

(a) Set a new gasket on each cylinder head.

NOTICE:

- **Align the port holes of the gasket and cylinder head.**
- **Be careful of the installation direction.**

(b) Set the intake manifold on the cylinder heads.

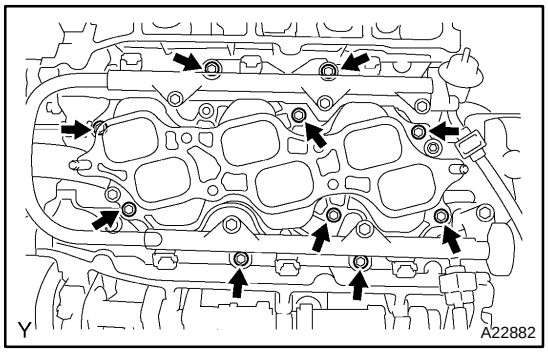

(c) Install and tighten the 10 bolts uniformly in several steps.
Torque: 26 N·m (265 kgf·cm, 19 ft·lbf)

(d) Connect the 6 fuel injector connectors.

16. INSTALL CYLINDER HEAD COVER

(a) Install the RH cylinder head cover.

(1) Remove any old packing material (FIPG) and be careful not to drop any oil on the contact surfaces of the cylinder head, timing chain cover and cylinder head cover.

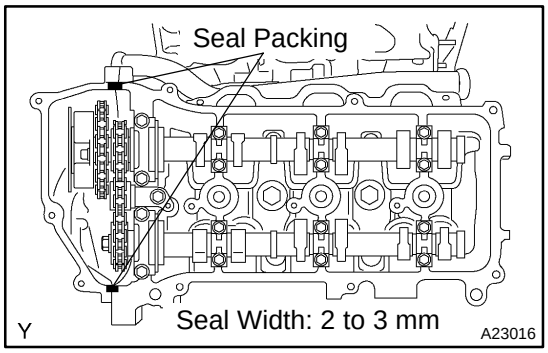

(2) Apply a continuous bead of seal packing (diameter 2 to 3 mm (0.08 to 0.12 in.)) to the cylinder head and timing chain cover as shown in the illustration.

Seal packing: Part No. 08826−00080 or equivalent

NOTICE:

Install the cylinder head cover within 3 minutes after applying seal packing. After installing it, cylinder head cover bolts and nuts must be tightened within 15 minutes. Otherwise the seal packing must be removed and reapplied.

(3) Install the seal washers to the bolts.

(4) Install the cylinder head cover with the 10 bolts and 2 nuts. Tighten the bolts and nuts uniformly in several steps.

Torque:
Bolt A, Nut: 9.0 N·m (92 kgf·cm, 80 in.·lbf)
Bolt B: 10 N·m (102 kgf·cm, 7 ft·lbf)

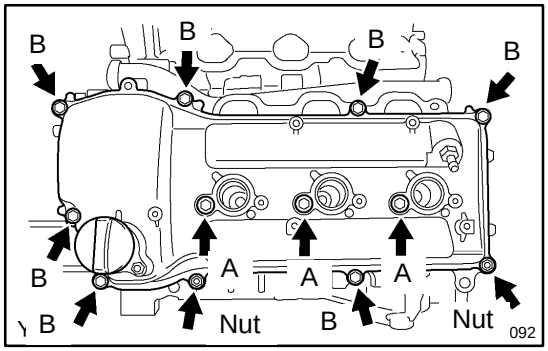

(b) Install a new gasket and oil filler cap housing with the 2 nuts.

Torque: 9.0 N·m (92 kgf·cm, 80 in.·lbf)

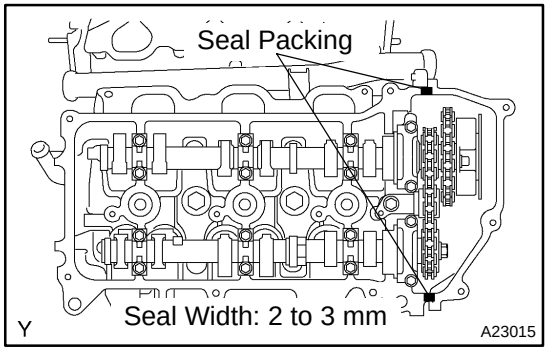

(c) Install the LH cylinder head cover.

(1) Apply a continuous bead of seal packing (diameter 2 to 3 mm (0.08 to 0.12 in.)) to the cylinder head and timing chain cover as shown in the illustration.

Seal packing: Part No. 08826−00080 or equivalent

NOTICE:

Install the cylinder head cover within 3 minutes after applying seal packing. After installing it, cylinder head cover bolts and nuts must be tightened within 15 minutes. Otherwise the seal packing must be removed and reapplied.

(2) Install the seal washers to the bolts.

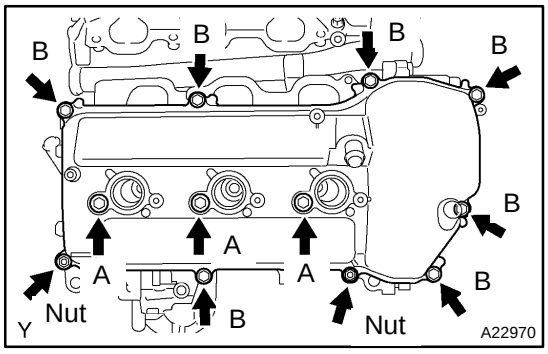

(3) Install the cylinder head cover with the 10 bolts and 2 nuts. Tighten the bolts and nuts uniformly in several steps.

Torque:
Bolt A, Nut: 9.0 N·m (92 kgf·cm, 80 in.·lbf)
Bolt B: 10 N·m (102 kgf·cm, 7 ft·lbf)

17. INSTALL IGNITER

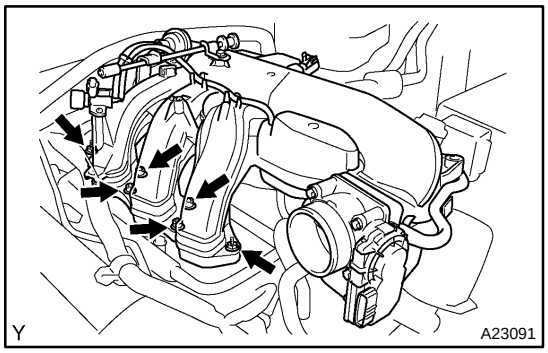

18. INSTALL INTAKE AIR SURGE TANK

(a) Install a new gasket to the intake air surge tank.

(b) Using the socket hexagon wrench 8, install the intake air surge tank with the 4 bolts.
Torque: 28 N·m (286 kgf·cm, 21 ft·lbf)

(c) Install the 2 intake air surge tank nuts.
Torque: 28 N·m (286 kgf·cm, 21 ft·lbf)

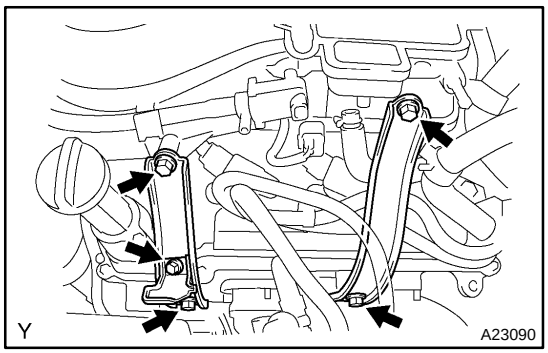

(d) Install the 2 surge tank stays with the 4 bolts.
Torque: 21 N·m (214 kgf·cm, 15 ft·lbf)

(e) Install the oil baffle plate with the bolt.
Torque: 9.0 N·m (92 kgf·cm, 80 in.·lbf)

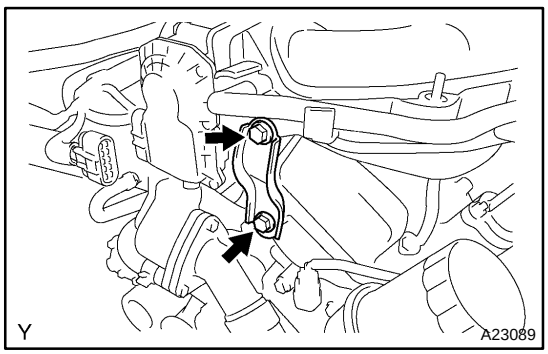

(f) Install the throttle body bracket with the 2 bolts.
Torque: 21 N·m (214 kgf·cm, 15 ft·lbf)

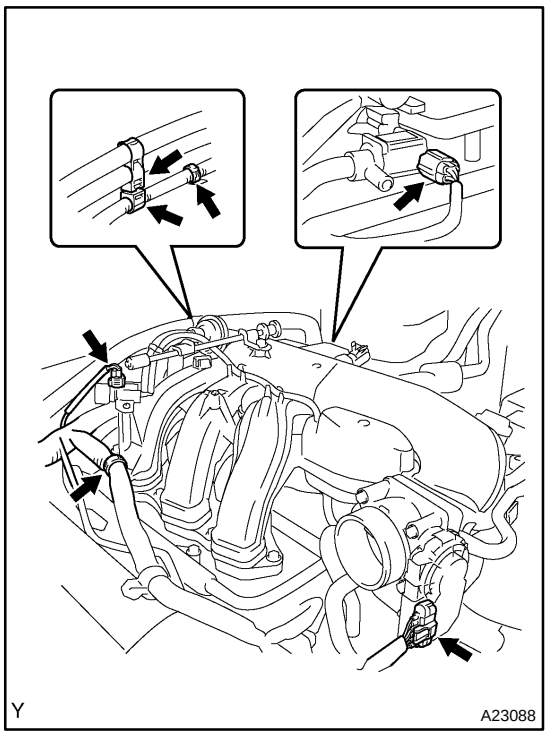

(g) Install the 3 wire harness clamps and hose clamp.
(h) Connect the throttle body w/ motor connector.
(i) Connect the 2 VSV connectors.

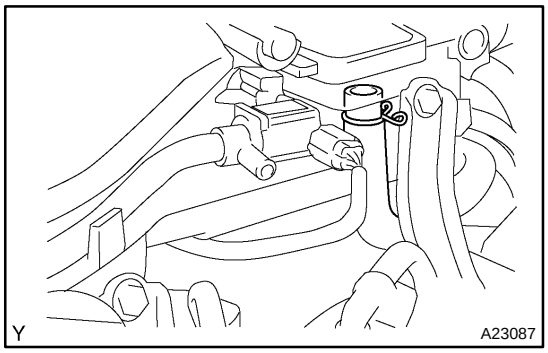

(j) Connect the ventilation hose.

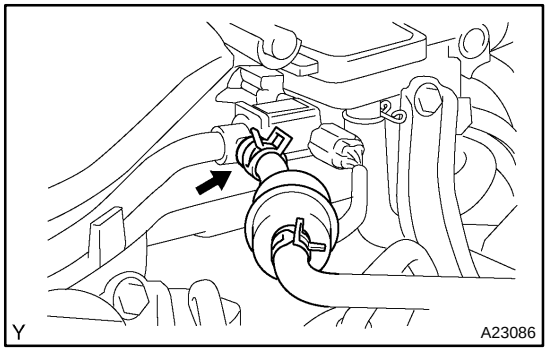

(k) Connect the fuel vapor feed hose.

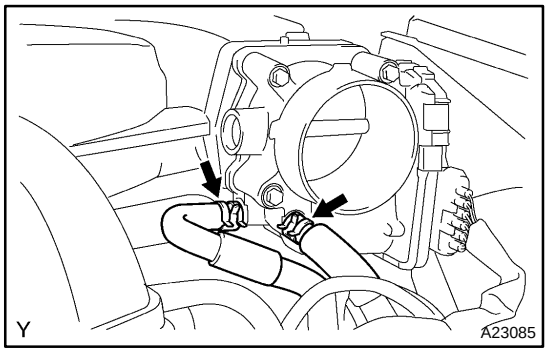

(l) Connect the 2 water by−pass hoses.

19. CONNECT HEATER WATER OUTLET AND INLET HOSE

20. INSTALL COOLER COMPRESSOR (See page AC−58)

21. INSTALL GENERATOR (See page CH−15)

22. INSTALL VANE PUMP (See page SR−57)

23. INSTALL FAN W/FLUID COUPLING

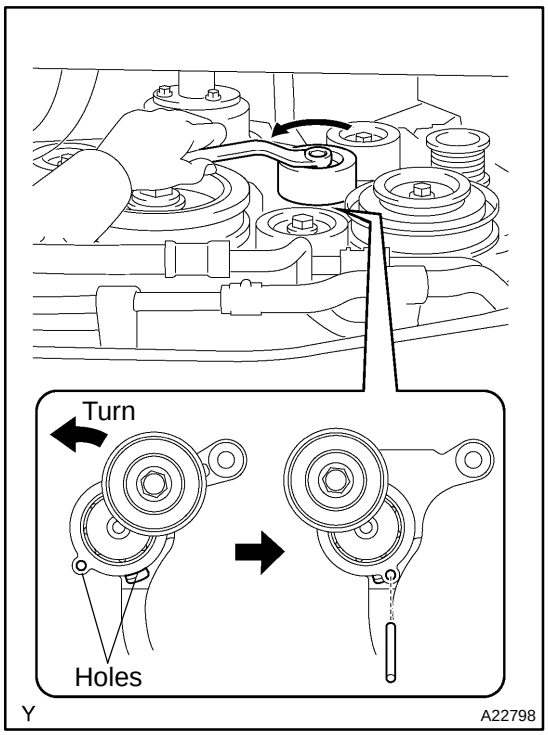

24. INSTALL DRIVE BELT

(a) While turning the belt tensioner counterclockwise, align with the holes. Insert a bar of 6 mm (0.24 in.) into the holes to fix the belt tensioner.

(b) Install the V−ribbed belt.

(c) While turning the belt tensioner counterclockwise, remove the bar.

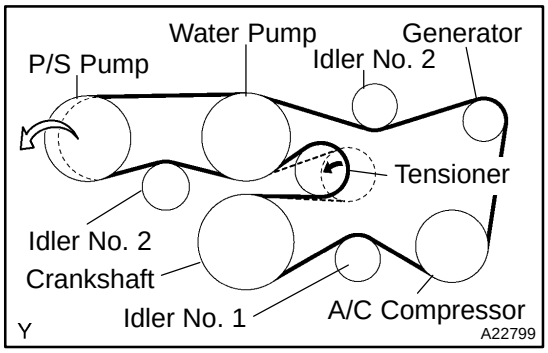

(d) If it is hard to install the V−ribbed belt, perform the following procedure.

(1) Put the V−ribbed belt on every parts except the P/S pump as shown in the illustration.

(2) While releasing the belt tension by turning the belt tensioner counterclockwise, put the V−ribbed belt on the P/S pump.

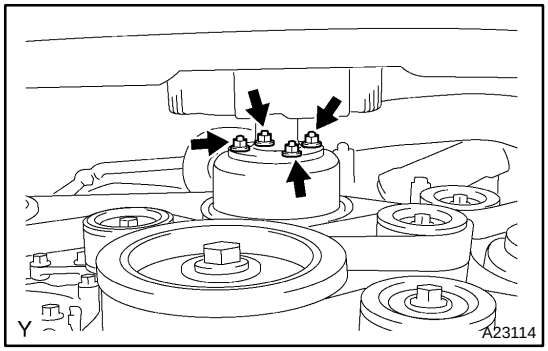

25. TIGHTEN FAN W/FLUID COUPLING

Tighten the 4 fluid coupling bolts.

Torque: 21 N·m (214 kgf·cm, 15 ft·lbf)

26. INSTALL RADIATOR (See page CO−18)

27. INSTALL FAN SHROUD

28. CONNECT FUEL PIPE (See page SF−1)

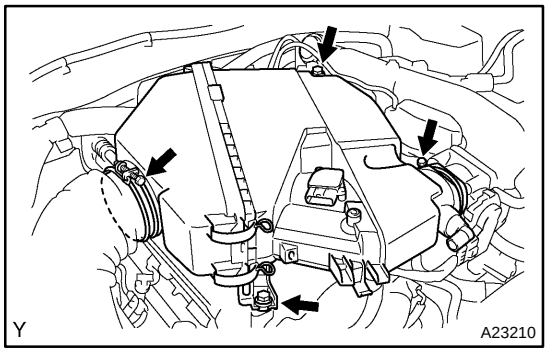

29. INSTALL AIR CLEANER

(a) Install the air cleaner with the 2 bolts.

Torque: 8.0 N·m (82 kgf·cm, 71 in.·lbf)

(b) Tighten the 2 hose clamps.

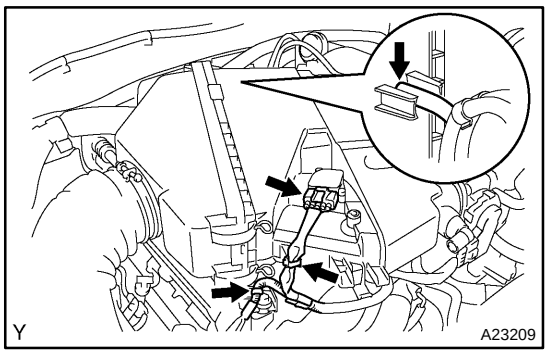

(c) Install the 2 wire harness clamps.
(d) Connect the mass air flow meter connector.
(e) Connect the vacuum hose.

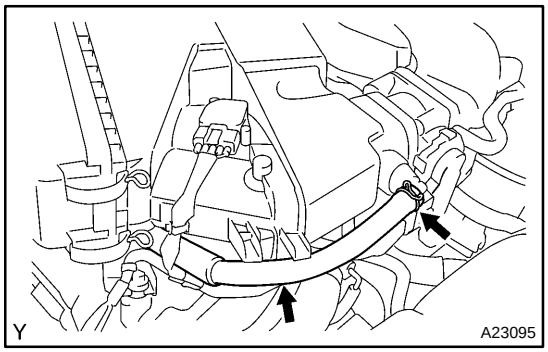

(f) Connect the ventilation hose No.2.

30. ADD ENGINE COOLANT

31. ADD ENGINE OIL

32. CHECK FOR LEAK

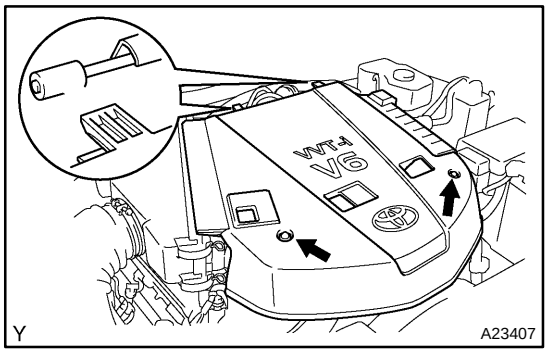

33. INSTALL V−BANK COVER

Install the V−bank cover with the 2 nuts.

Torque: 7.5 N·m (76 kgf·cm, 66 in.·lbf)

EM1XT−01

REASSEMBLY

1. INSTALL RING PIN

Using a plastic−faced hammer, tap in the new ring pins until they reach the specified protrusion height.

Specified protrusion height:
2.7 to 3.3 mm (0.106 to 0.130 in.)

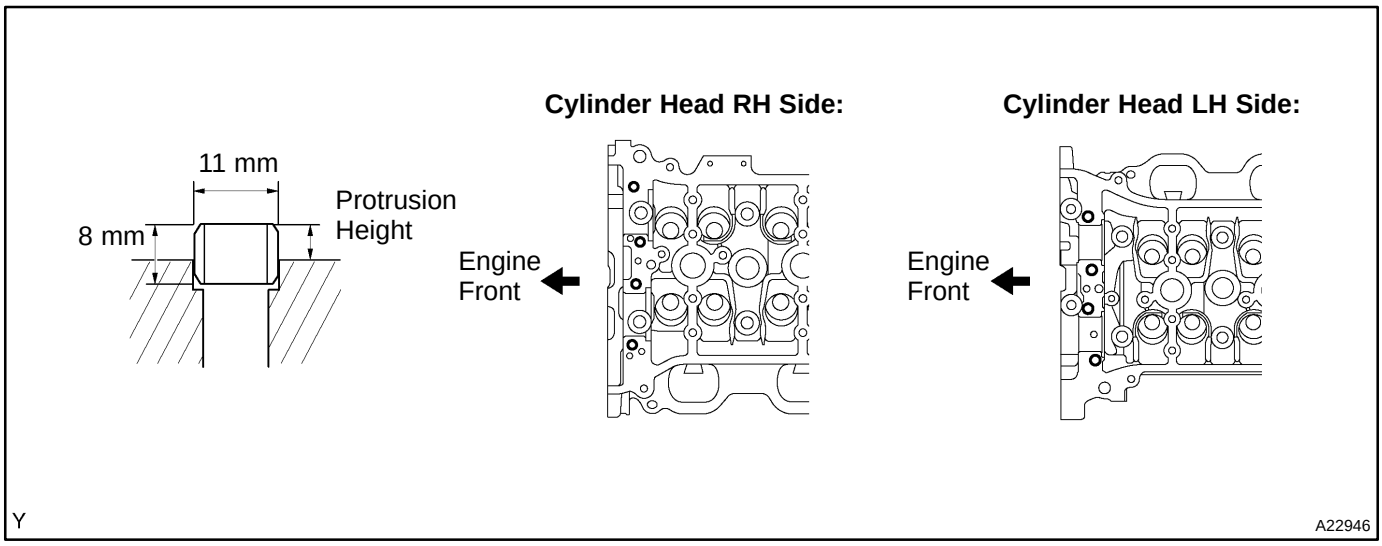

2. INSTALL STRAIGHT PIN

Using a plastic−faced hammer, tap in the new straight pins until they reach the specified protrusion height.

Specified protrusion height:

A	17.5 to 19.5 mm (0.689 to 0.768 in.)
B	7.5 to 8.5 mm (0.295 to 0.335 in.)
C	7.0 to 9.0 mm (0.276 to 0.354 in.)

Cylinder Head RH Side:

Front Side:

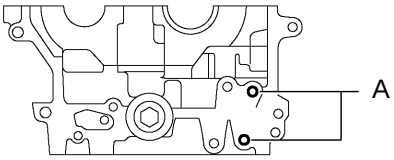

Upper Side:

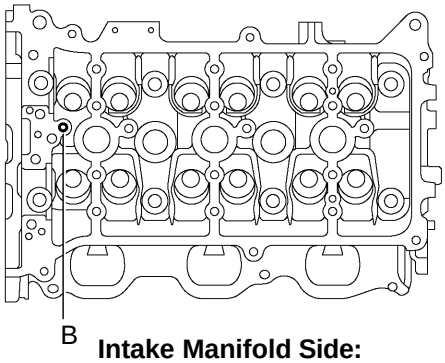

Intake Manifold Side:

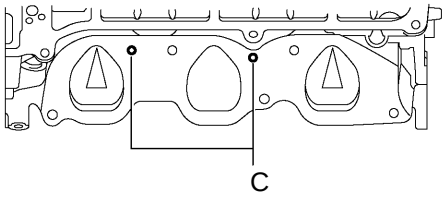

Cylinder Head LH Side:

Upper Side:

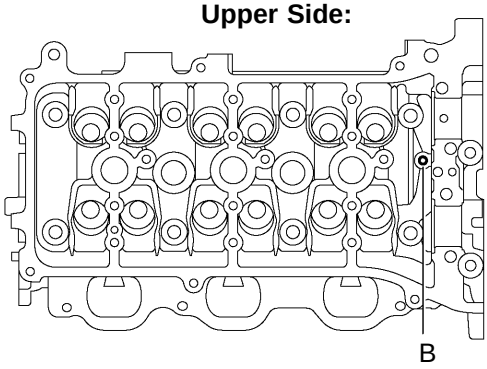

Front Side:

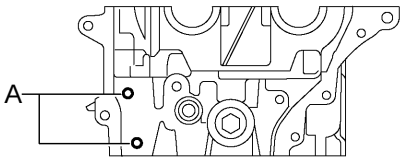

Intake Manifold Side:

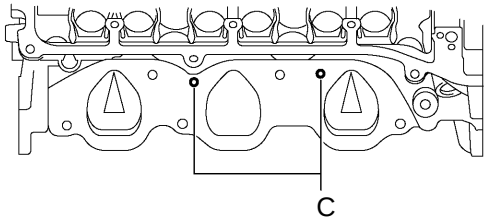

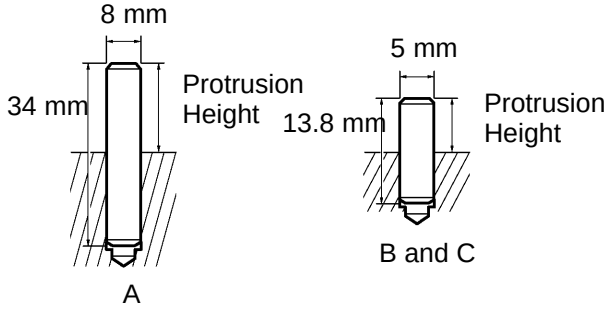

Y

A22947

3. INSTALL STUD BOLT

Using the Torx® socket wrench E5 and E7, install the stud bolts.

Torque:
4.0 N·m (41 kgf·cm, 35 in.·lbf) for stud bolt A, C
19.5 N·m (199 kgf·cm, 14 ft·lbf) for stud bolt B

Cylinder Head RH Side:

Rear Side:

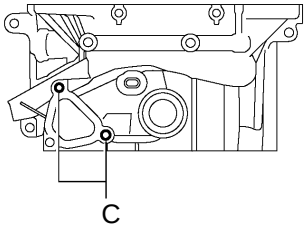

Upper Side:

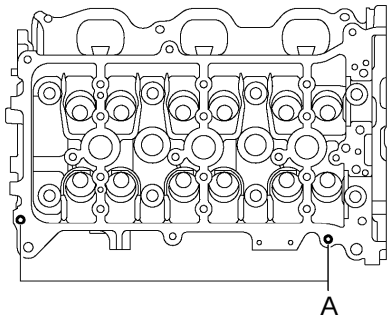

Exhaust Manifold Side:

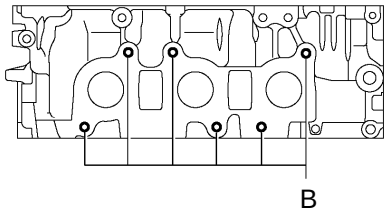

Cylinder Head LH Side:

Upper Side:

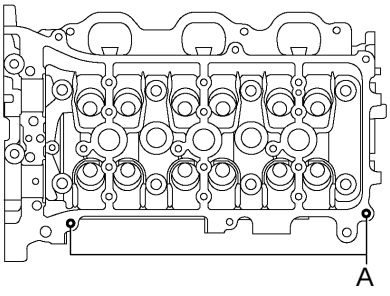

Rear Side:

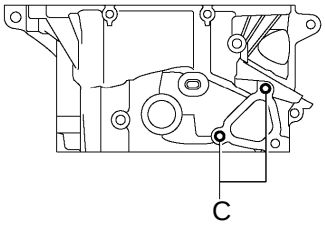

Exhaust Manifold Side:

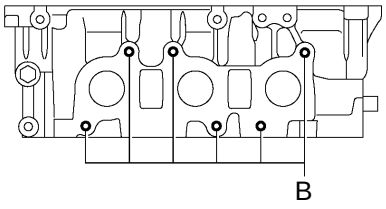

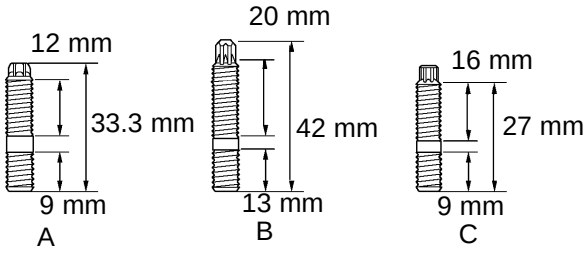

Y

A22948

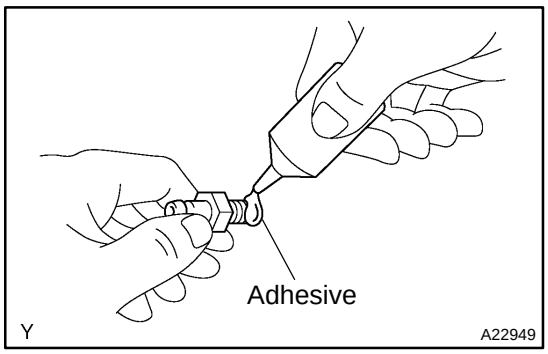

4. INSTALL UNION

(a) Apply adhesive to 2 or 3 threads of the bolt end.
Adhesive:
Part No. 08833−00070, THREE BOND 1324 or equivalent

(b) Using a deep socket wrench 12, install the unions.
Torque: 15 N·m (153 kgf·cm, 11 ft·lbf)

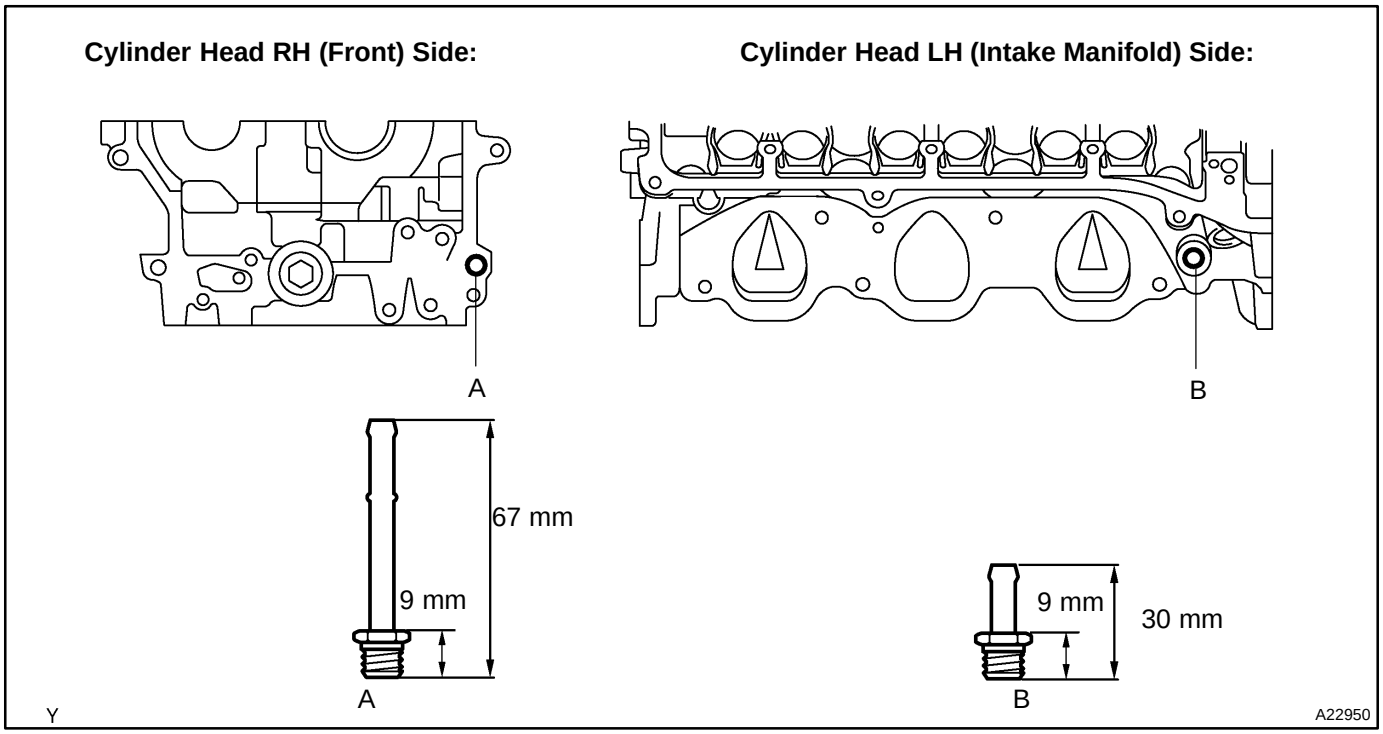

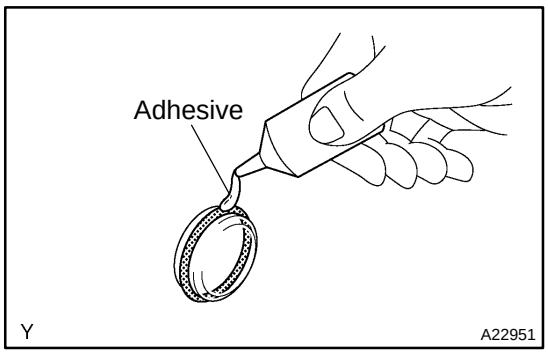

5. INSTALL TIGHT PLUG

(a) Apply adhesive around the tight plugs.

(b) Using SST, tap in the tight plugs to the specified depth.

SST 09950−60010 (09951−00250), 09950−70010 (09951−07150)

Specified depth: 1.5 mm (0.059 in.)

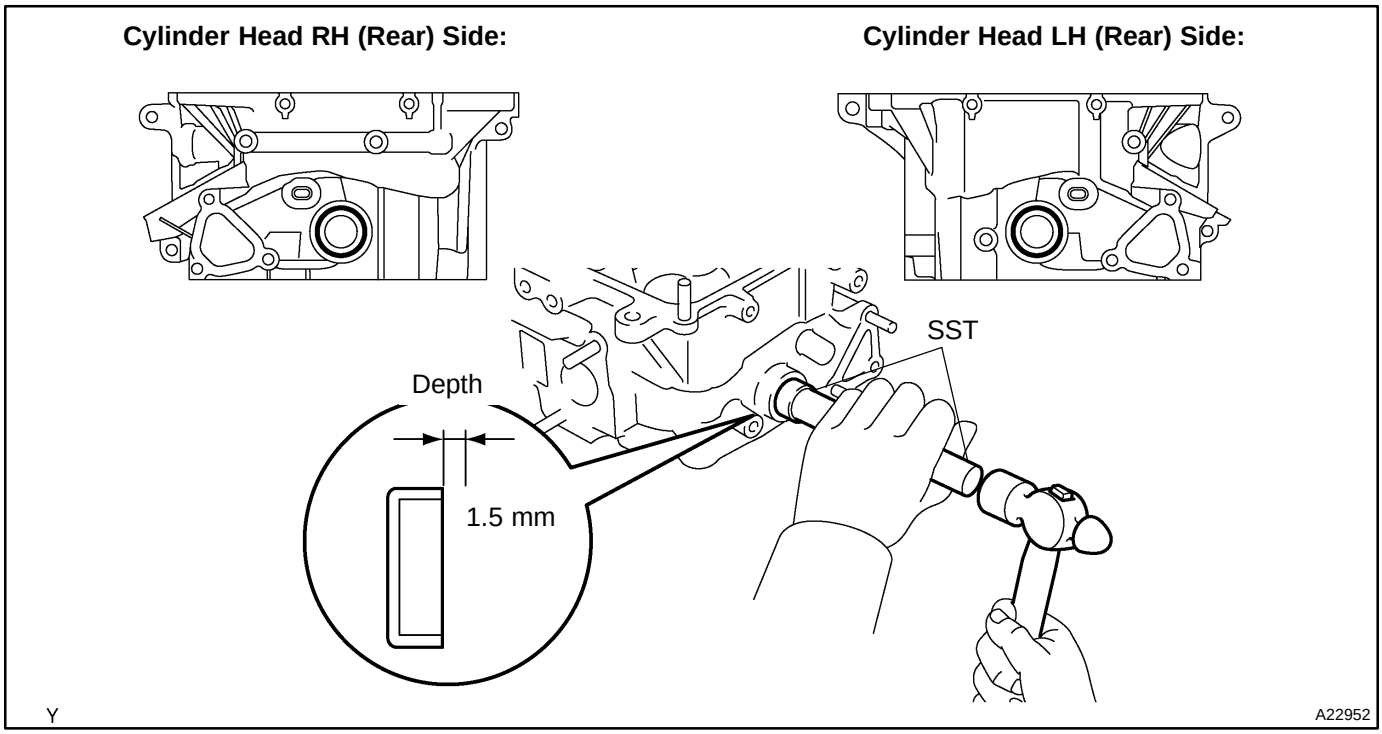

6. INSTALL STRAIGHT SCREW PLUG

(a) Using a straight hexagon wrench 14, install a new gasket and straight screw plug.
Torque: 80 N·m (816 kgf·cm, 59 ft·lbf)

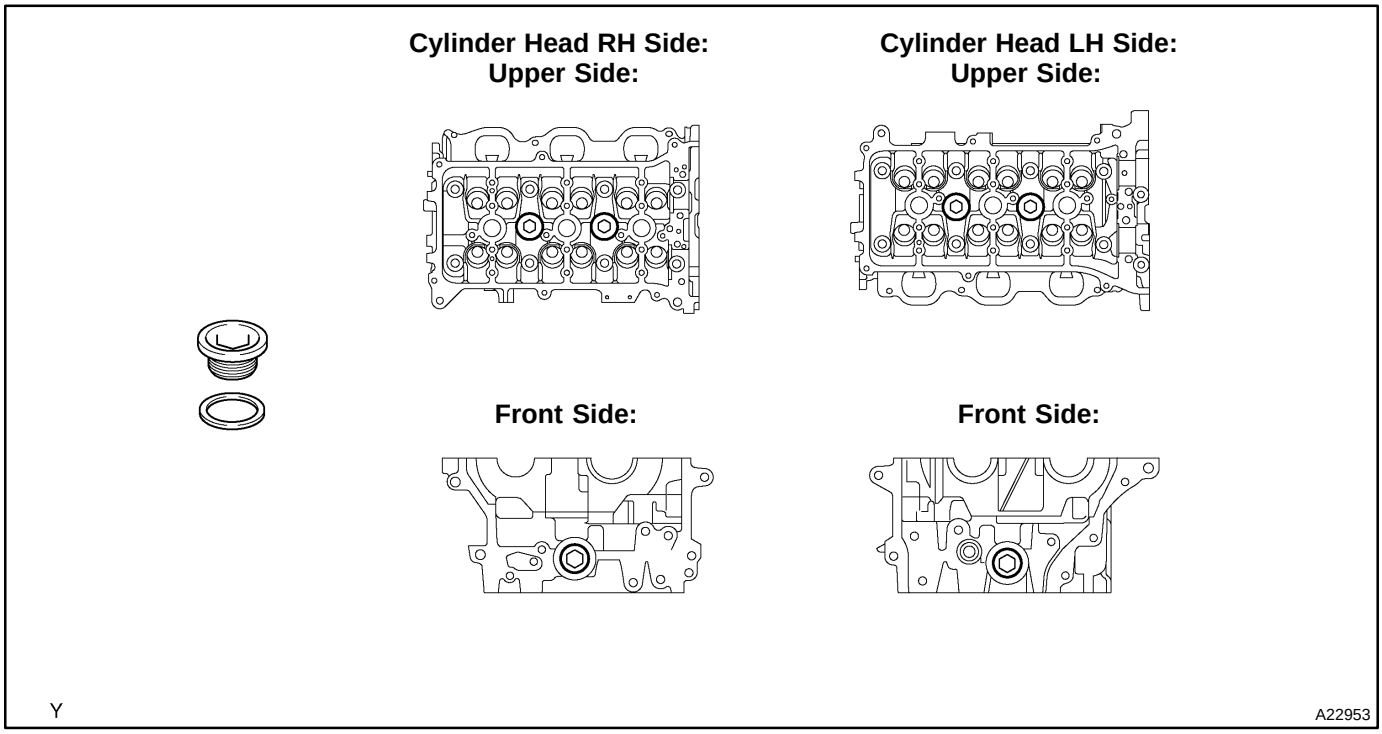

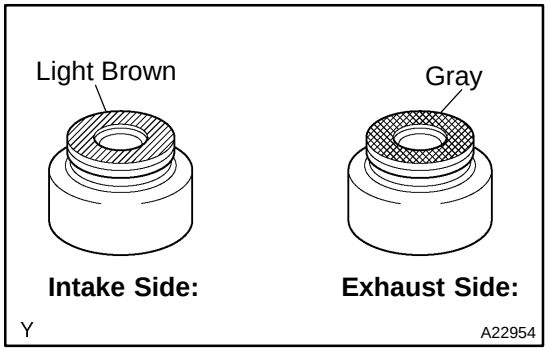

7. INSTALL VALVE STEM OIL SEAL

HINT:
The intake valve stem oil seal is light brown and the exhaust valve stem oil seal is gray.

(a) Apply a light coat of engine oil to the valve guide bush.

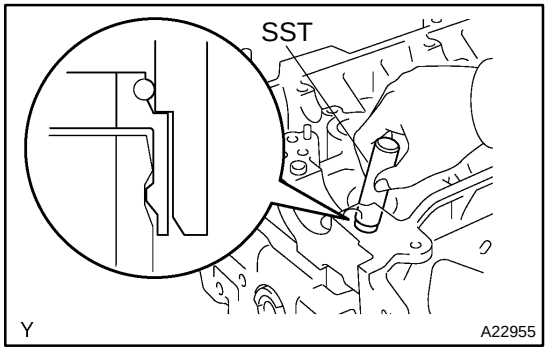

(b) Using SST, push in a new valve stem oil seal.
SST 09201−41020

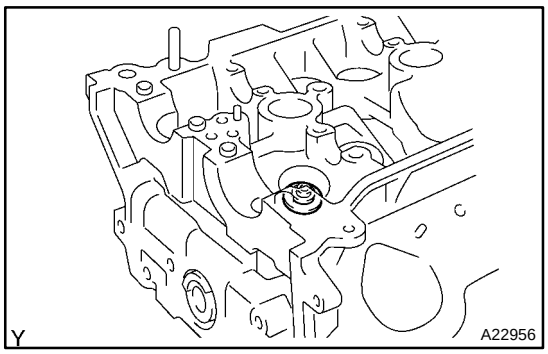

8. INSTALL VALVE SPRING SEAT

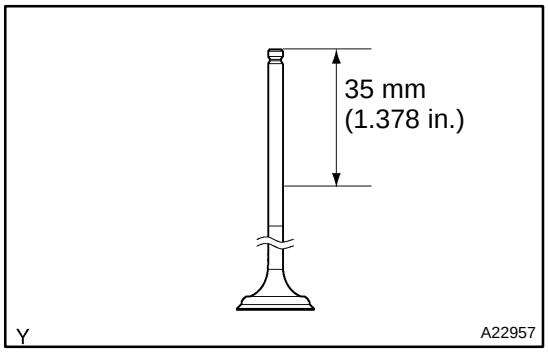

9. INSTALL VALVE

(a) Apply engine oil to the valve as shown in the illustration.

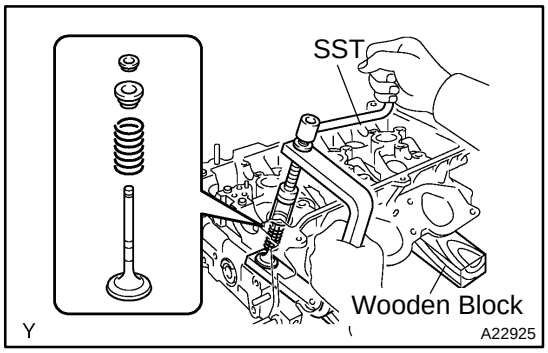

(b) Place the cylinder head on a wooden block.

(c) Install the valve, inner compression spring and valve spring retainer.

(d) Using SST, compress the inner compression spring and place the 2 valve spring retainer locks around the valve stem.

SST 09202−70020 (09202−00010)

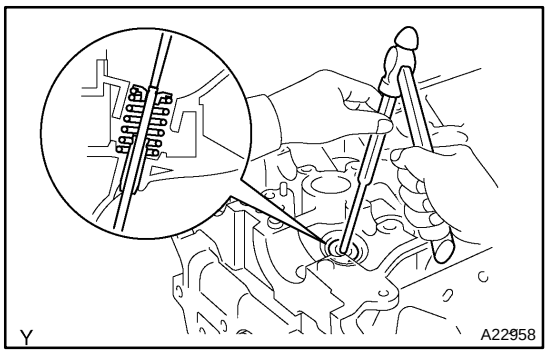

(e) Using a pin punch 5, lightly tap the valve stem tip to ensure a proper fit.

NOTICE:

Be careful not to damage the valve stem tip.

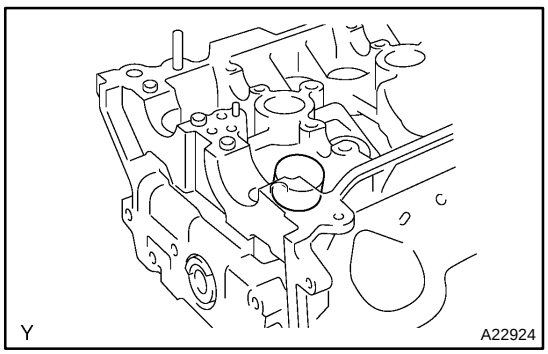

10. INSTALL VALVE LIFTER

(a) Apply engine oil to the valve stem end and valve lifter, and install the valve lifter to the valve stem.

(b) Check that the valve lifter rotates smoothly by hand.

EM1XP−01

REMOVAL

1. PREVENT GASOLINE FROM SPILLING OUT

2. DRAIN ENGINE COOLANT (See page CO−2)

3. DRAIN ENGINE OIL (See page LU−3)

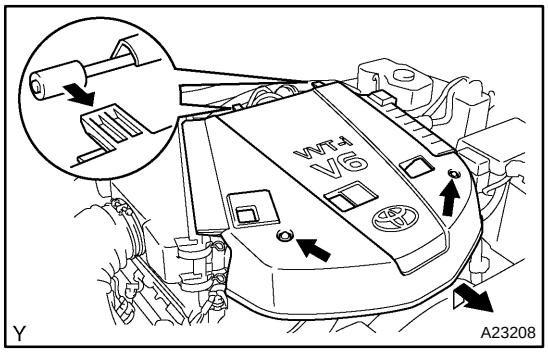

4. REMOVE V−BANK COVER

Remove the 2 nuts and V−bank cover.

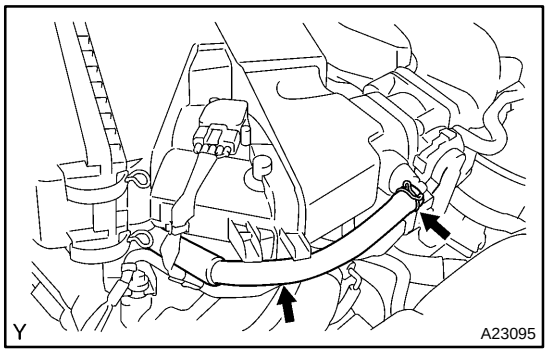

5. REMOVE AIR CLEANER

(a) Disconnect the ventilation hose No.2.

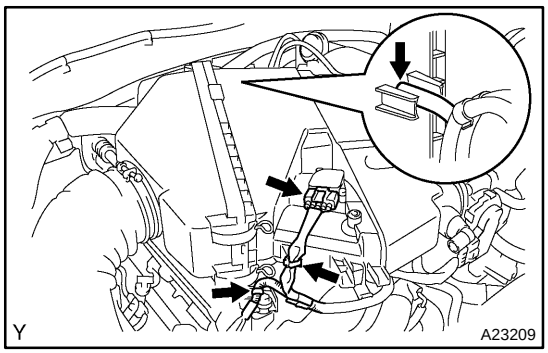

(b) Disconnect the vacuum hose.

(c) Disconnect the mass air flow meter connector.

(d) Remove the 2 wire harness clamps.

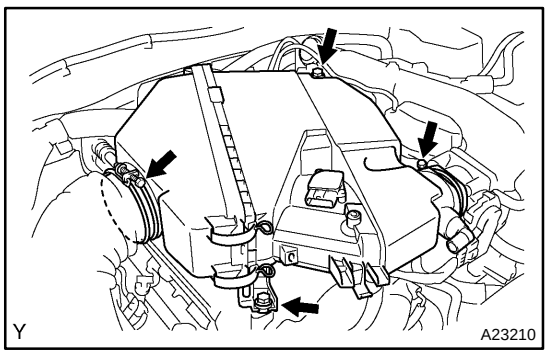

(e) Loosen the 2 hose clamps.

(f) Remove the 2 bolts and air cleaner

6. DISCONNECT FUEL PIPE (See page SF−1)

7. REMOVE FAN SHROUD

8. REMOVE RADIATOR (See page CO−17)

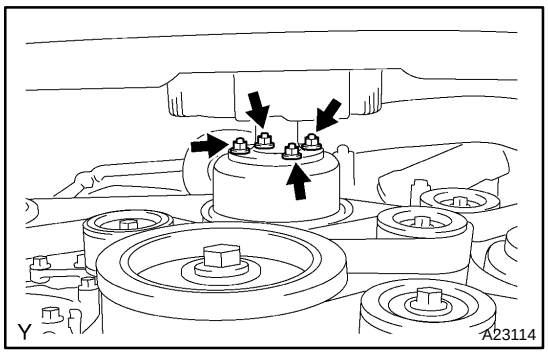

9. LOOSEN FAN W/FLUID COUPLING

Loosen the 4 nuts of the fan w/ fluid coupling.

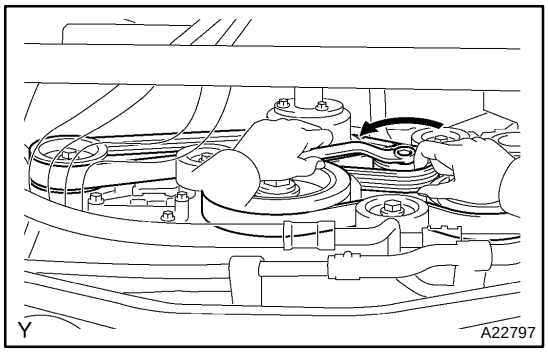

10. REMOVE DRIVE BELT

Release the belt tension by turning the belt tensioner counter-clockwise. Remove the V−ribbed belt from the belt tensioner.

11. REMOVE FAN W/FLUID COUPLING

12. SEPARATE VANE PUMP (See page SR−47)

13. REMOVE GENERATOR (See page CH−7)

14. SEPARATE COOLER COMPRESSOR (See page AC−54)

15. DISCONNECT HEATER WATER OUTLET AND INLET HOSE

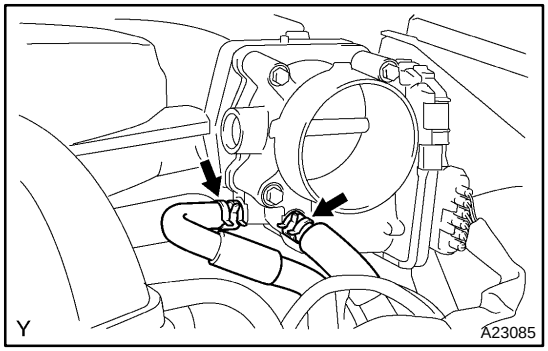

16. REMOVE INTAKE AIR SURGE TANK

(a) Disconnect the 2 water by−pass hoses.

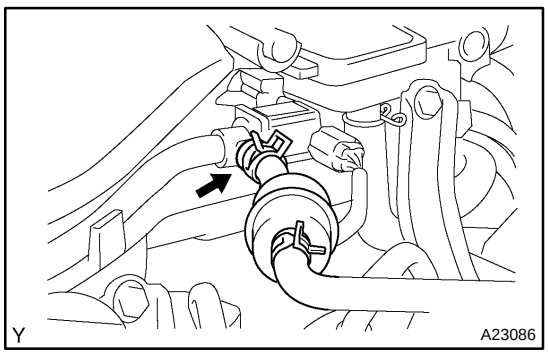

(b) Disconnect the fuel vapor feed hose.

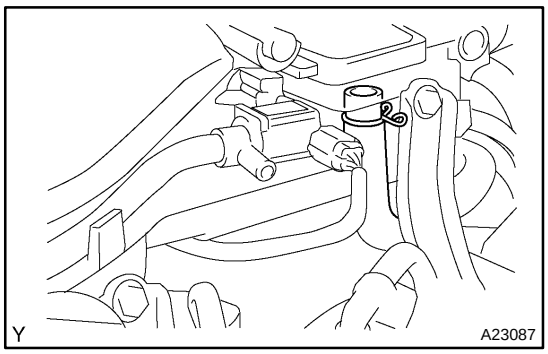

(c) Disconnect the ventilation hose.

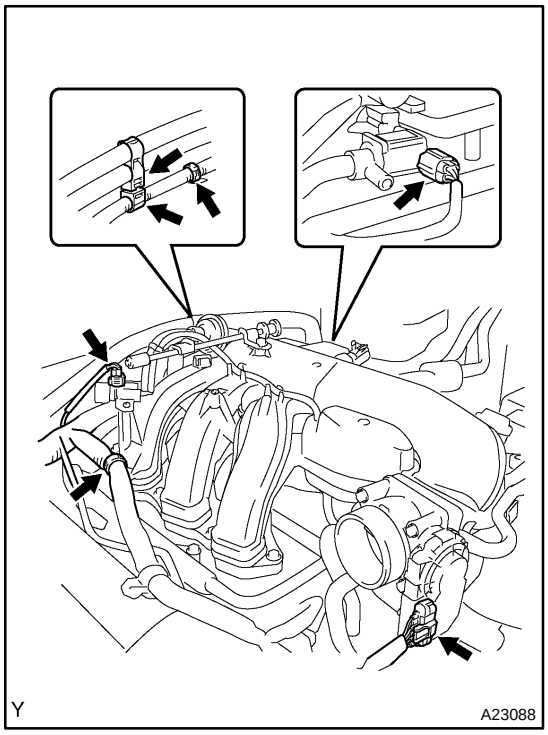

(d) Disconnect the 2 VSV connectors.
(e) Disconnect the throttle body w/ motor connector.
(f) Separate the 3 wire harness clamps and hose clamp.

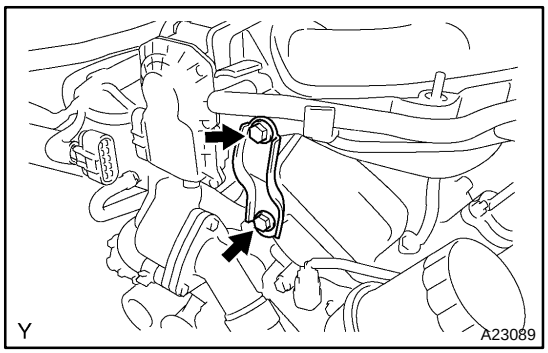

(g) Remove the 2 bolts and throttle body bracket.

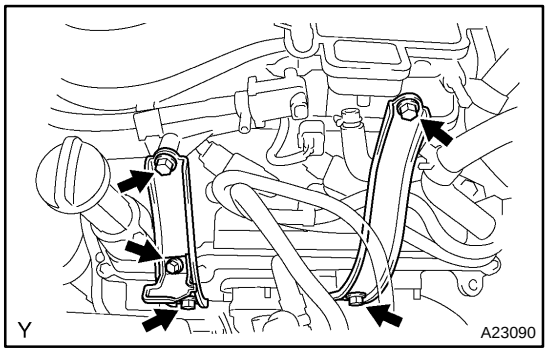

(h) Remove the bolt and oil baffle plate.
(i) Remove the 4 bolts and 2 surge tank stays.

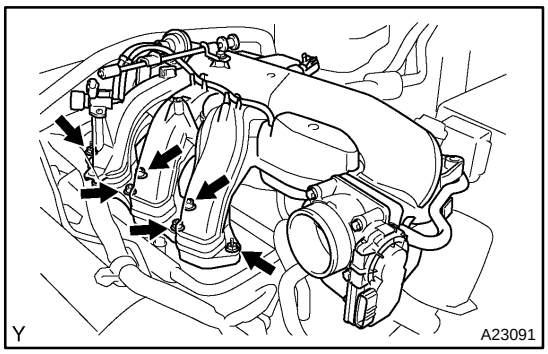

(j) Remove the 2 nuts.
(k) Using a socket hexagon wrench 8, remove the 4 bolts, intake air surge tank and gasket.

17. REMOVE IGNITER (See page IG−6)

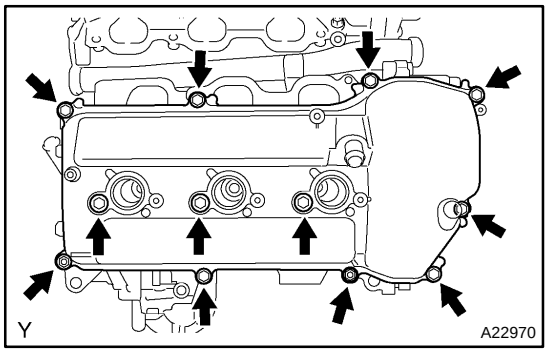

18. REMOVE CYLINDER HEAD COVER
(a) Remove the 10 bolts, 3 seal washers, 2 nuts, cylinder head cover RH and gasket.
(b) Remove the 2 nuts, oil filter cap housing and gasket.

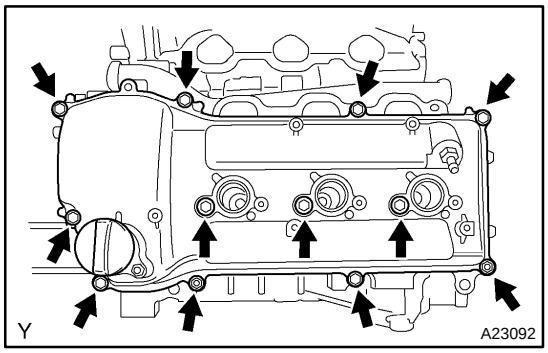

(c) Remove the 10 bolts, 3 seal washers, 2 nuts, cylinder head cover LH and gasket.

19. REMOVE INTAKE MANIFOLD
(a) Disconnect the 6 fuel injector connectors.

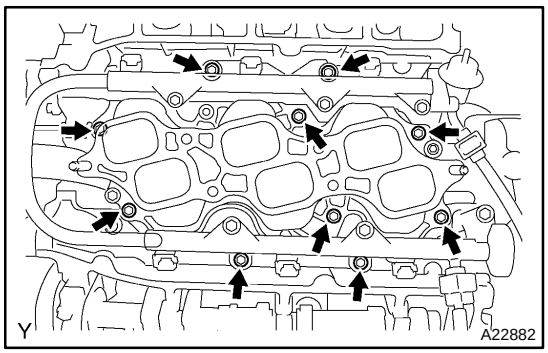

(b) Remove the 10 bolts, intake manifold and 2 gaskets.

20. REMOVE WATER BY−PASS JOINT
(a) Disconnect the engine coolant temperature sensor connector.
(b) Disconnect the heater hose.

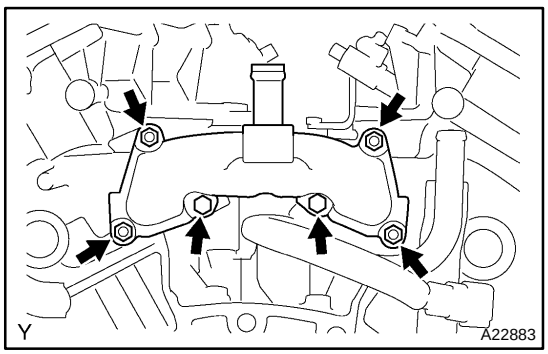

(c) Remove the 2 bolts, 4 nuts, water by−pass joint RR and 2 gaskets.
(d) Remove the O−ring from the water outlet pipe.

21. REMOVE CAMSHAFT TIMING OIL CONTROL VALVE

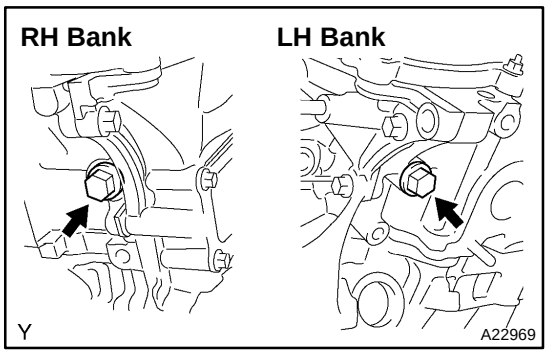

22. REMOVE OIL CONTROL VALVE FILTER

Remove the plug, filter and gasket from each cylinder head.

23. REMOVE VVT SENSOR

24. REMOVE RH AND LH FRONT EXHAUST PIPE

25. REMOVE RH AND LH EXHAUST MANIFOLD

(a) Remove the 6 bolts and 2 exhaust manifold stays.

(b) Remove the 12 nuts, RH and LH exhaust manifold and 2 gaskets.

26. REMOVE OIL PAN (See page EM−32)

27. REMOVE TIMING CHAIN COVER (See page EM−32)

28. REMOVE TIMING CHAIN (See page EM−32)

29. REMOVE CAMSHAFT

NOTICE:

As the thrust clearance of the camshaft is small, the camshaft must be kept level while it is being removed. If the camshaft is not kept level, the portion of the cylinder head which receives the shaft thrust may crack or be damaged, causing the camshaft to seize or break. To avoid this, the following steps should be carried out.

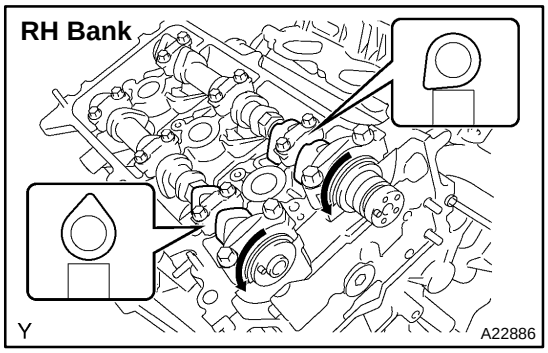

(a) Remove the camshafts of the RH bank.

(1) Rotate the camshafts counterclockwise using the wrench so that the cam lobes of the No. 1 cylinder face each direction as shown in the illustration.

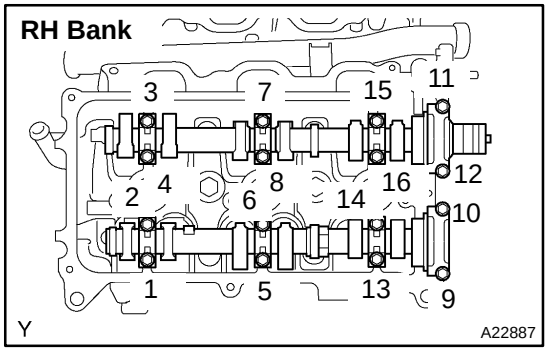

(2) Using several steps, uniformly loosen and remove the 16 bearing cap bolts in the sequence as shown in the illustration.

(3) Remove the 8 bearing caps and 2 camshafts.

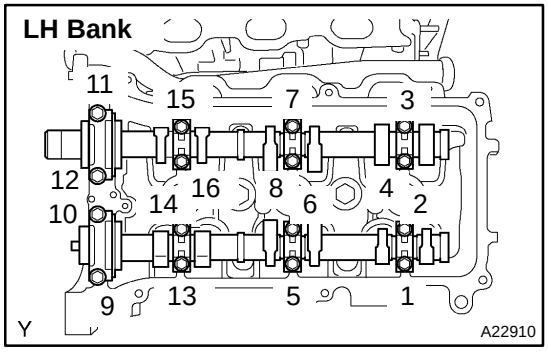

(b) Remove the camshafts of the LH bank.

(1) Using several steps, uniformly loosen and remove the 16 bearing cap bolts in the sequence as shown in the illustration.

(2) Remove the 8 bearing caps and 2 camshafts.

30. REMOVE CAMSHAFT BEARING NO.1 AND NO.2

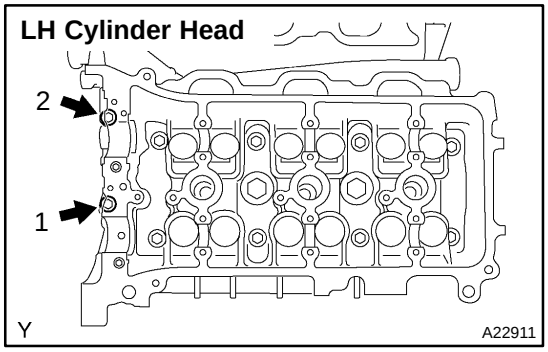

31. REMOVE CYLINDER HEAD

(a) Using several steps, remove the 2 cylinder head bolts on the LH cylinder head in the sequence as shown in the illustration.

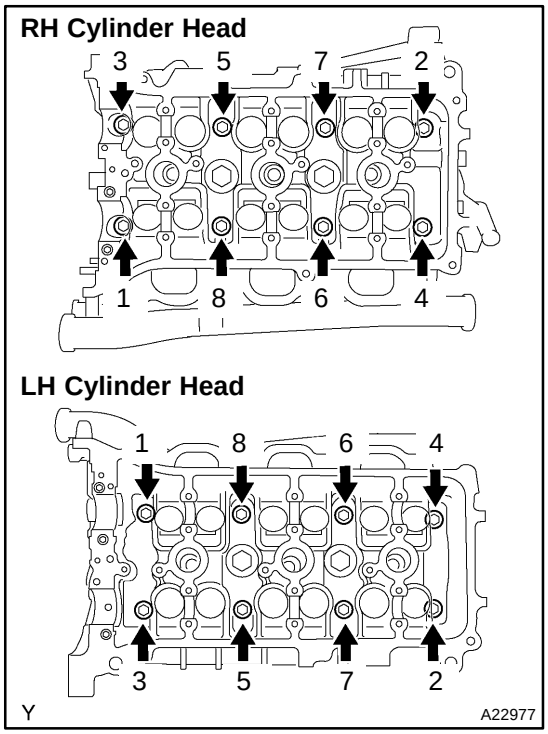

(b) Using several steps, loosen the 8 cylinder head bolts on each cylinder head with a 10 mm bi−hexagon wrench in the sequence as shown in the illustration. Remove the 16 cylinder head bolts and plate washers.

NOTICE:

- **Be careful not to drop the plate washers into the cylinder head.**
- **Cylinder head warpage or cracking could result from removing the bolts in the incorrect order.**

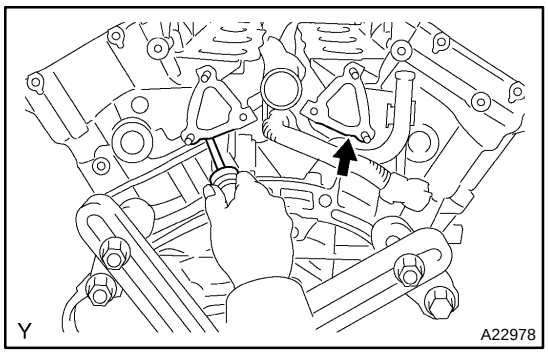

(c) Lift the cylinder head from the dowels on the cylinder block, and place the 2 cylinder heads on wooden blocks on a bench.

NOTICE:

Be careful not to damage the contact surfaces of the cylinder head and cylinder block.

HINT:

If the cylinder head is difficult to lift off, pry between the cylinder head and cylinder block with a screwdriver.

(d) Remove the RH and LH cylinder head gaskets.

32. REMOVE CYLINDER HEAD GASKET

EM1XS−01

REPLACEMENT

1. REPLACE VALVE GUIDE BUSH

(a) Gradually heat the cylinder head to between 80 and 100°C (176 to 212°F).

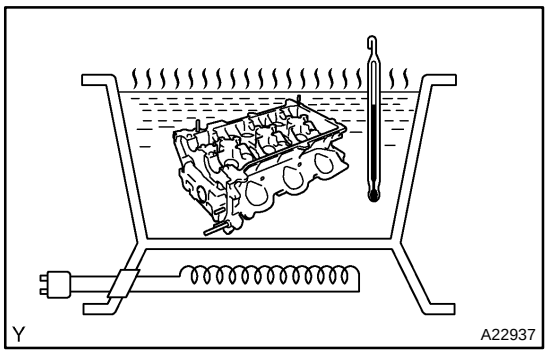

(b) Place the cylinder head on a wooden block.

(c) Using SST, tap out the valve guide bush.

SST 09201−10000, 09201−01055, 09950−70010 (09951−07100)

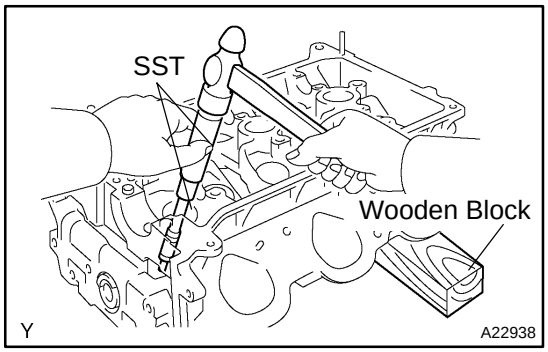

(d) Using a caliper gauge, measure the bush bore diameter of the cylinder head.

Bush bore diameter:

10.295 to 10.315 mm (0.4053 to 0.4061 in.)

If the bush bore diameter of the cylinder head is greater than 10.315 mm (0.4061 in.), machine the bush bore to dimensions of 10.345 to 10.365 mm (0.4073 to 0.4081 in.).

Valve guide bush diameter

STD	10.333 to 10.344 mm (0.4068 to 0.4072 in.)
O/S 0.05	10.383 to 10.394 mm (0.4088 to 0.4092 in.)

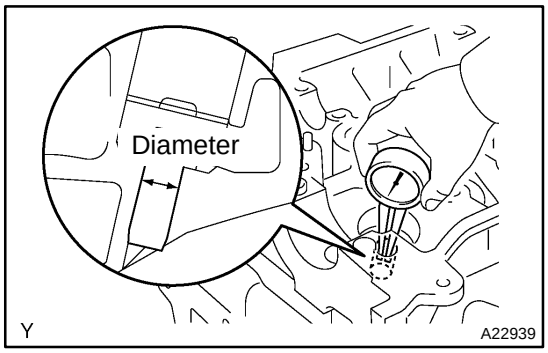

(e) Gradually heat the cylinder head to between 80 and 100°C (176 to 212°F).

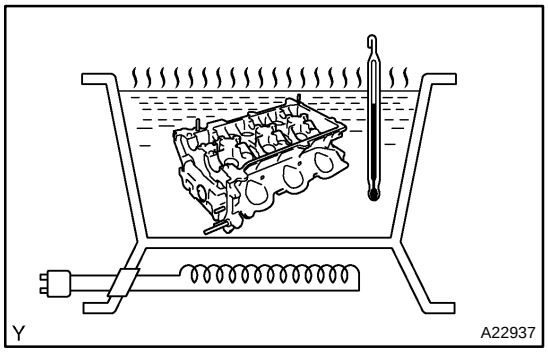

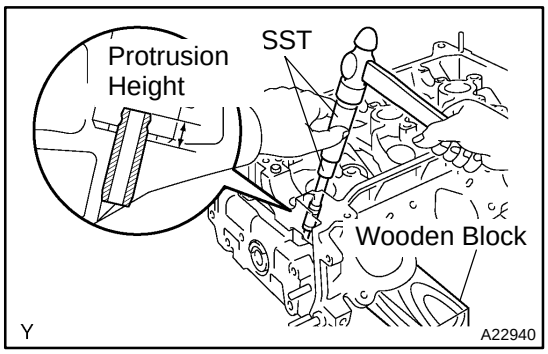

(f) Place the cylinder head on a wooden block.

(g) Using SST, tap in a new valve guide bush to the specified protrusion height.

SST 09201−10000, 09201−01055, 09950−70010 (09951−07100)

Protrusion height: 9.3 to 9.7 mm (0.366 to 0.382 in.)

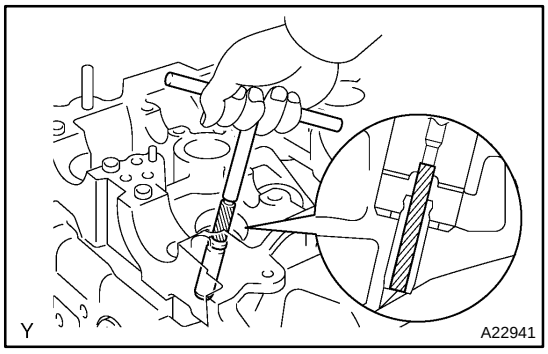

(h) Using a sharp 5.5 mm reamer, ream the valve guide bush to obtain the standard specified clearance between the valve guide bush and valve stem.

Standard oil clearance:

Intake	0.025 to 0.060 mm (0.0010 to 0.0024 in.)
Exhaust	0.030 to 0.065 mm (0.0012 to 0.0026 in.)

ENGINE UNIT

COMPONENTS

EM1XV−01

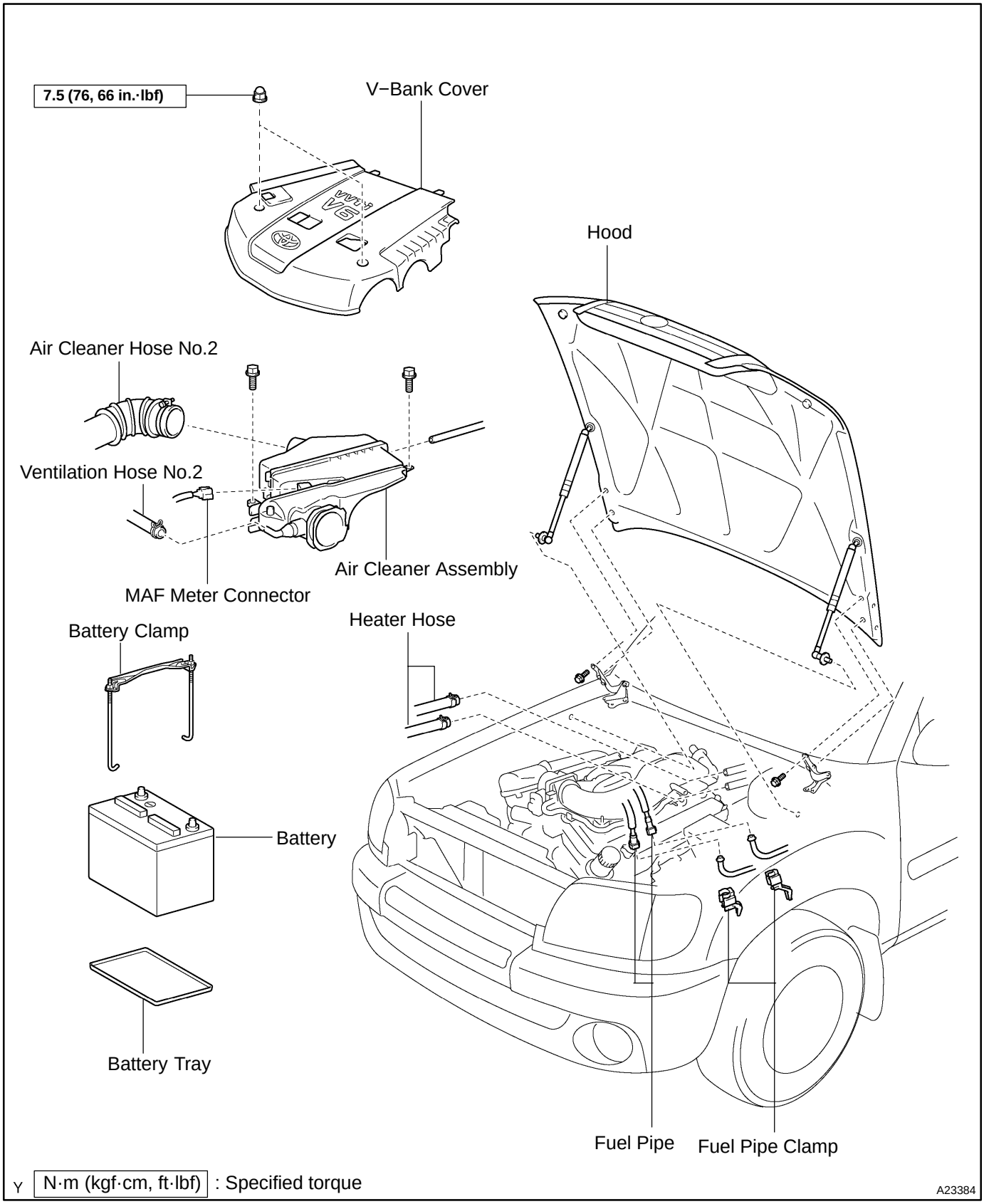

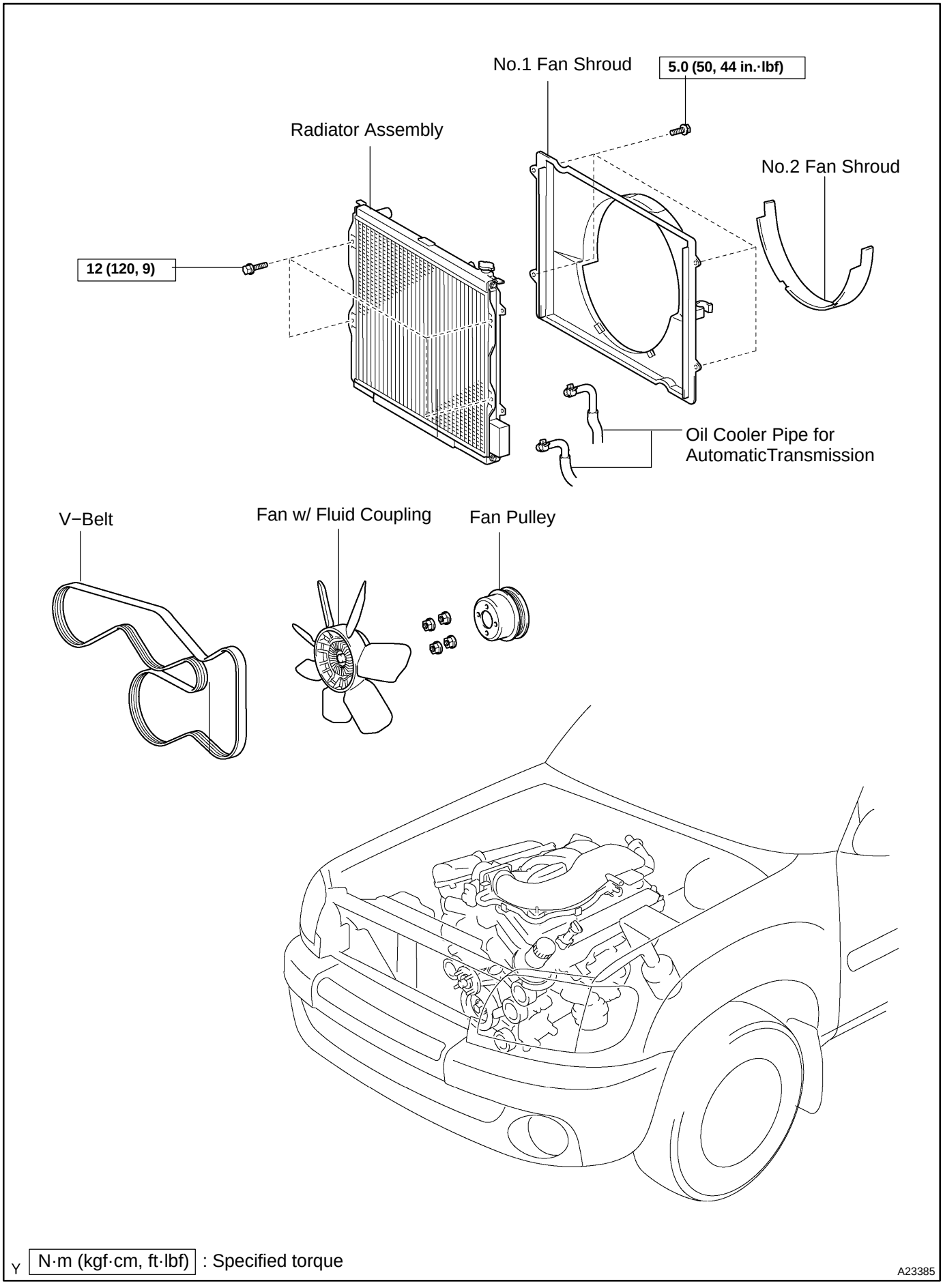
No.1 Fan Shroud
5.0 (50, 44 in.·lbf)
Radiator Assembly
No.2 Fan Shroud
12 (120, 9)
Oil Cooler Pipe for
AutomaticTransmission
V−Belt
Fan w/ Fluid Coupling
Fan Pulley
Y N·m (kgf·cm, ft·lbf) : Specified torque
A23385

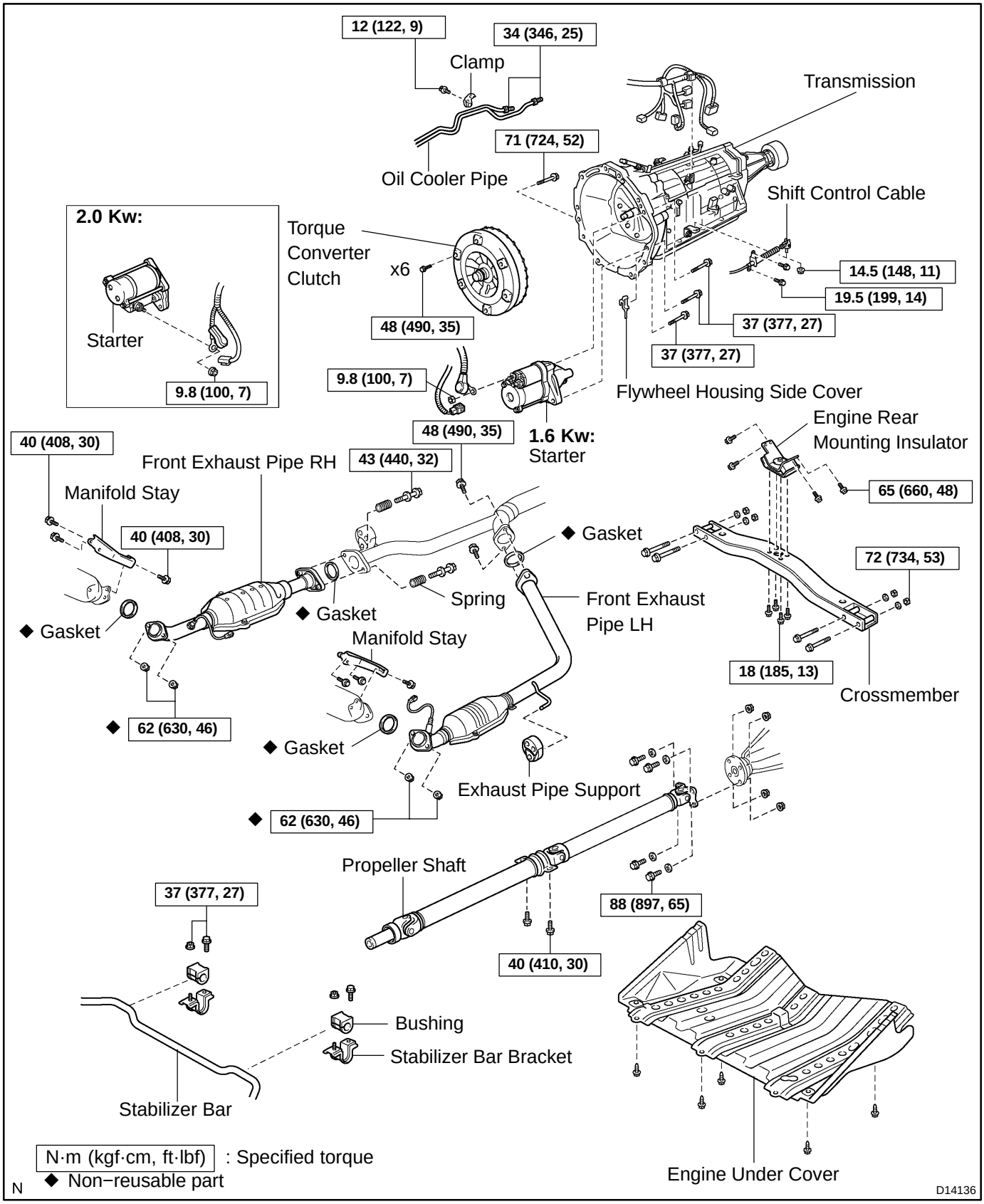
12 (122, 9)
34 (346, 25)
Clamp
Transmission
71 (724, 52)
Oil Cooler Pipe
Shift Control Cable
2.0 Kw:
Torque
Converter
Clutch
x6
14.5 (148, 11)
19.5 (199, 14)
37 (377, 27)
37 (377, 27)
48 (490, 35)
Starter
9.8 (100, 7)
9.8 (100, 7)
Flywheel Housing Side Cover
48 (490, 35)
1.6 Kw:
Starter
Engine Rear
Mounting Insulator
40 (408, 30)
Front Exhaust Pipe RH
43 (440, 32)
65 (660, 48)
Manifold Stay
40 (408, 30)
◆ Gasket
72 (734, 53)
Spring
Front Exhaust
Pipe LH
◆ Gasket
◆ Gasket
Manifold Stay
18 (185, 13)
Crossmember
◆ 62 (630, 46)
◆ Gasket
Exhaust Pipe Support
◆ 62 (630, 46)
Propeller Shaft
37 (377, 27)
88 (897, 65)
40 (410, 30)
Bushing
Stabilizer Bar Bracket
Stabilizer Bar
Engine Under Cover
N·m (kgf·cm, ft·lbf) : Specified torque
◆ Non−reusable part
N
D14136

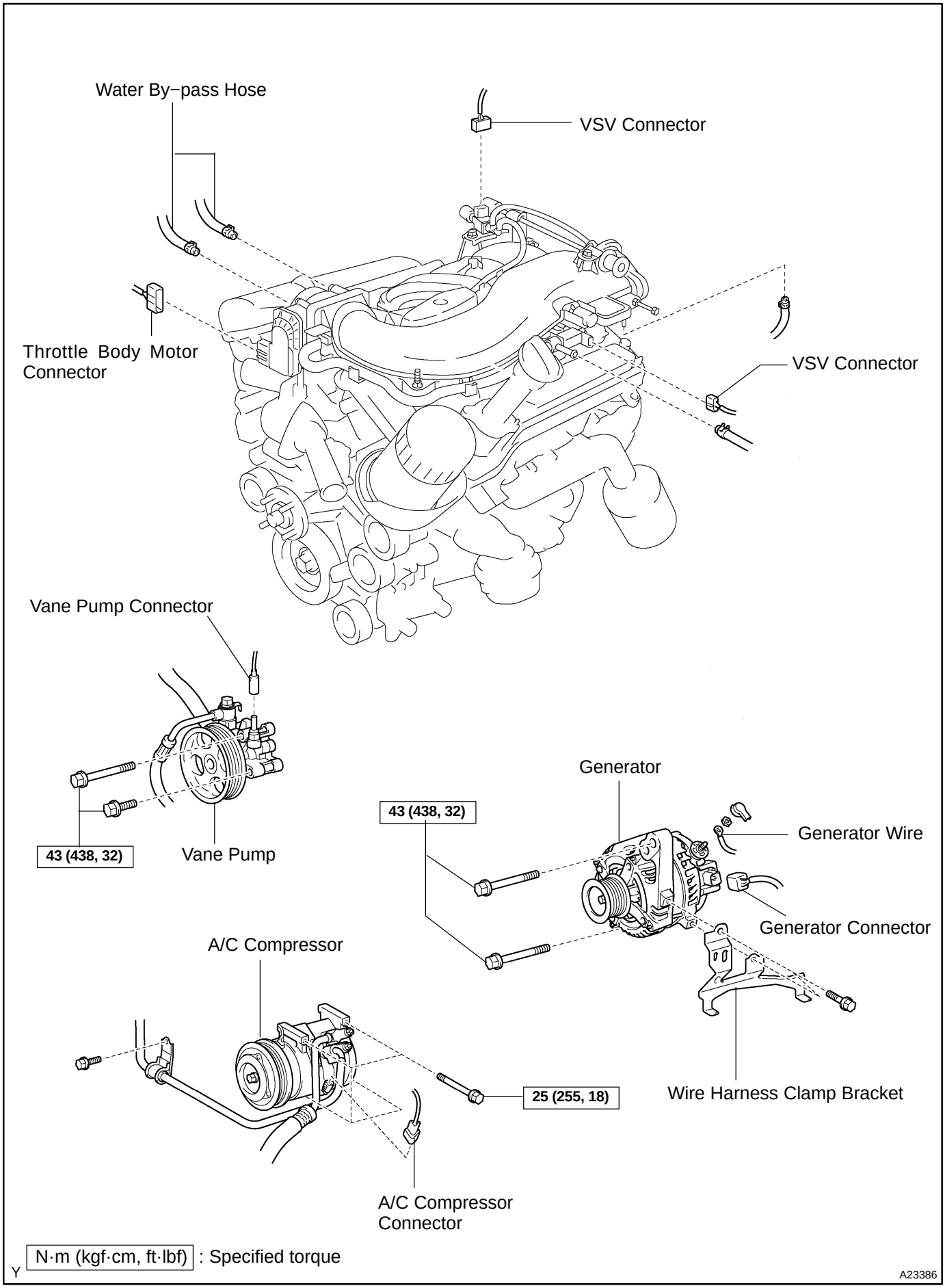
Water By−pass Hose
VSV Connector
Throttle Body Motor Connector
VSV Connector
Vane Pump Connector
43 (438, 32)
Vane Pump
Generator
43 (438, 32)
Generator Wire
Generator Connector
A/C Compressor
25 (255, 18)
Wire Harness Clamp Bracket
A/C Compressor Connector
N·m (kgf·cm, ft·lbf) : Specified torque
Y
A23386

EM1XX−01

INSTALLATION

1. INSTALL DRIVE PLATE

HINT:

- The mounting bolts are tightened in 2 progressive steps (steps (c) and (e)).
- If any of the mounting bolts is broken or deformed, replace it.

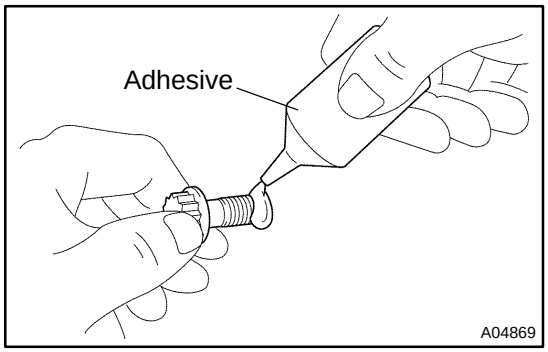

(a) Apply adhesive to 2 or 3 threads of the mounting bolt end.
Adhesive:
Part No. 08833−00070, THREE BOND 1324 or equivalent

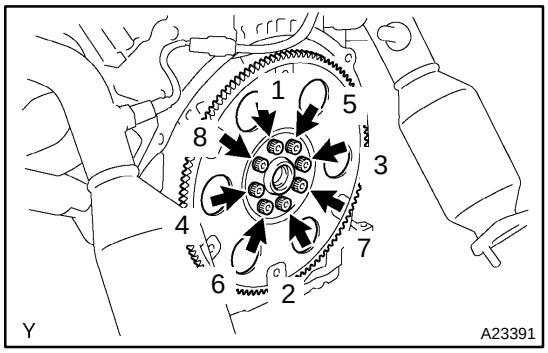

(b) Install the front spacer, drive plate and rear spacer on the crankshaft.
(c) Install and uniformly tighten the 8 mounting bolts in several steps, in the sequence shown in the illustration.
Torque: 49 N·m (500 kgf·cm, 36 ft·lbf)

If any of the mounting bolts do not meet the torque specification, replace it.

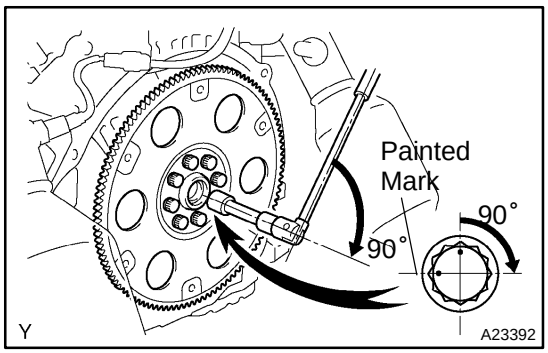

(d) Mark the mounting bolt with paint.
(e) Retighten the mounting bolts 90° in the order shown in the illustration.
(f) Check that the painted mark is now at a 90° angle to what it was in step (e).

2. INSTALL ENGINE ASSEMBLY IN VEHICLE

(a) Attach the engine chain hoist to the engine hangers.
(b) Slowly lower the engine assembly into the engine compartment.
(c) Attach the engine mounting brackets to the frame brackets.
(d) Install the engine mounting brackets to the frame brackets with the 2 nuts and 4 bolts.
Torque: 38 N·m (388 kgf·cm, 28 ft·lbf)
(e) Remove the engine chain hoist.
(f) Remove the 4 bolts and 2 engine hangers.

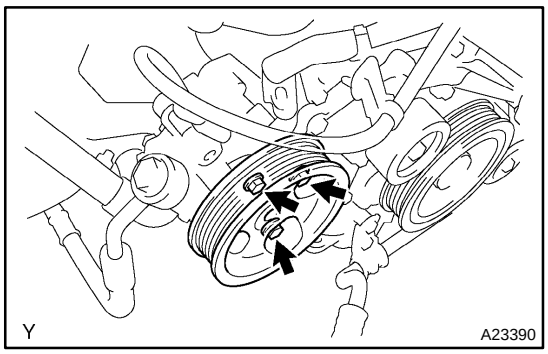

3. INSTALL PS PUMP

Install the PS pump with the 3 bolts.

Torque: 17 N·m (175 kgf·cm, 13 ft·lbf)

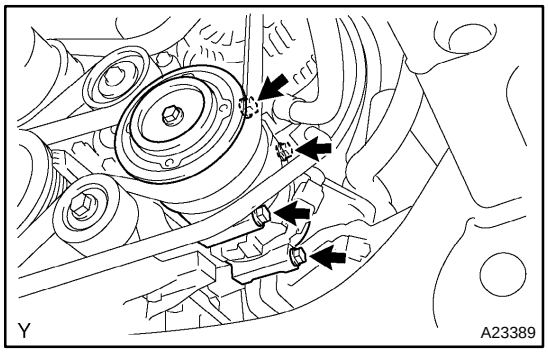

4. INSTALL A/C COMPRESSOR

(a) Install the A/C compressor with the 3 bolts.

Torque: 49 N·m (500 kgf·cm, 36 ft·lbf)

(b) Connect the A/C compressor connector.

5. CONNECT HOSES, WIRES, CONNECTORS, CLAMPS, GROMMET AND CABLES

(a) Connect the generator wire and connector.
(b) Connect the 2 heater hoses.
(c) Connect the ground strap to the cowl panel.
(d) Connect the fuel inlet hose and clamps.
(e) Connect the fuel return hose and clamp.
(f) Connect the air inlet hose to the charcoal canister.
(g) Connect the EVAP hose to the charcoal canister.
(h) Connect the brake booster tube.

6. CONNECT ENGINE WIRE TO CABIN

(a) Push the engine wire through the cowl panel.

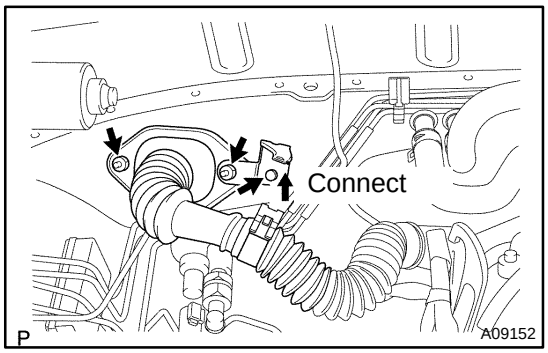

(b) Install the engine wire bracket with the 2 nuts and bolt and connect the engine wire to the bracket.
(c) Connect the 3 connectors to the ECM.
(d) Connect the 2 wire harness connectors (cassette connector).
(e) Install the ECM with the 3 screws.
(f) Install the heater to register duct.
(g) Install the lower No.2 finish panel.
(h) Install the glove compartment door.

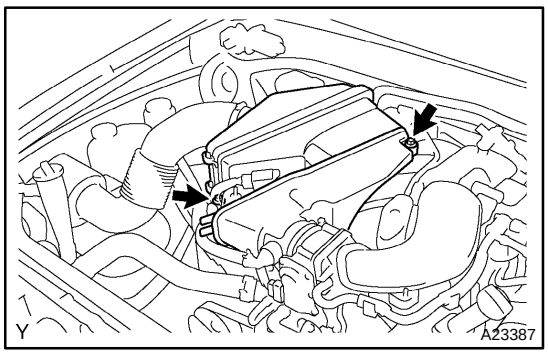

7. INSTALL AIR CLEANER ASSEMBLY

(a) Install the air cleaner assembly with the 2 bolts.
(b) Connect the air cleaner case to the air cleaner hose No.1.
(c) Connect the air cleaner case with the 2 wire clamps.
(d) Connect the PCV hose to the air cleaner case.
(e) Connect the MAF meter connector.
(f) Connect the air cleaner hose No.2 to the air cleaner case.

8. INSTALL BATTERY

9. INSTALL RADIATOR ASSEMBLY (See page CO−18)

10. INSTALL FRONT EXHAUST PIPES (See page EM−139)

11. **INSTALL AUTOMATIC TRANSMISSION (See page AT−31)**
12. **INSTALL MANUAL TRANSMISSION (See page MT−7)**
13. **FILL WITH ENGINE COOLANT (See page CO−2)**
14. **FILL WITH ENGINE OIL (See page LU−3)**
15. **START ENGINE AND CHECK FOR LEAKS**
16. **INSTALL ENGINE UNDER COVERS**
17. **INSTALL V−BANK COVER**
18. **INSTALL HOOD**
19. **PERFORM ROAD TEST**

Check for abnormal noise, shock, slippage, correct shift points and smooth operation.

20. **RECHECK ENGINE COOLANT AND OIL LEVELS**

EM1XW−01

REMOVAL

1. **PREVENT GASOLINE FROM SPILLING OUT (See page SF−1)**
2. **REMOVE ENGINE HOOD**
3. **REMOVE ENGINE V−BANK COVER**
4. **REMOVE ENGINE UNDER COVER**
5. **REMOVE AUTOMATIC TRANSMISSION (See page AT−27)**
6. **REMOVE MANUAL TRANSMISSION (See page MT−4)**
7. **REMOVE FRONT EXHAUST PIPES (See page EM−139)**
8. **REMOVE RADIATOR ASSEMBLY (See page CO−17)**
9. **REMOVE BATTERY**

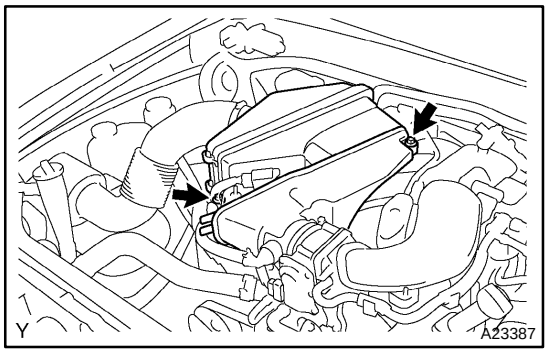

10. **REMOVE AIR CLEANER ASSEMBLY**

(a) Disconnect the air cleaner hose No.2 from the air cleaner case.
(b) Disconnect the MAF meter connector.
(c) Disconnect the PCV hose from the air cleaner case.
(d) Disconnect the 2 wire clamps from the air cleaner case.
(e) Disconnect the air cleaner case from the air cleaner hose No.1.
(f) Remove the 2 bolts and air cleaner assembly.

11. **REMOVE DRIVE BELT, FAN, FLUID COUPLING AND FAN PULLEY**

(a) Loosen the 4 nuts holding the fluid coupling to the fan bracket.
(b) Remove the drive belt. (See page CH−7)
(c) Remove the 4 nuts, fan, fluid coupling assembly and fan pulley.

12. **DISCONNECT ENGINE WIRE FROM CABIN**

(a) Remove the glove compartment door.
(b) Remove the lower No.2 finish panel.
(c) Remove the heater to register duct.
(d) Remove the 3 screws, and disconnect the ECM from the body bracket.
(e) Disconnect the 3 wire harness connectors from the ECM.

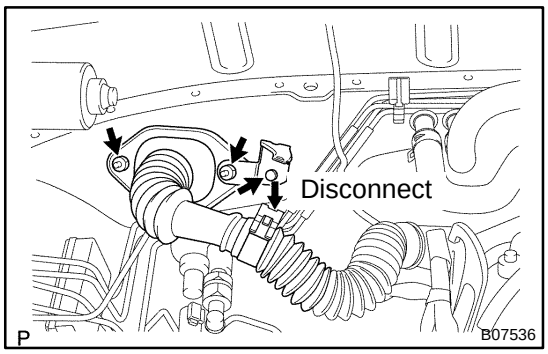

(f) Disconnect the engine wire from the engine wire bracket and remove the 2 nuts, bolt and bracket.
(g) Pull out the engine wire from the cowl panel.

13. DISCONNECT HOSES, WIRES, CONNECTORS, CLAMPS, GROMMET AND CABLES

(a) Disconnect the generator connector.
(b) Disconnect the 2 heater hoses.
(c) Disconnect the ground strap from the cowl panel.
(d) Disconnect the fuel inlet hose and clamps.
(e) Disconnect the fuel return hose and clamp.
(f) Disconnect the air inlet hose from the charcoal canister.
(g) Disconnect the EVAP hose from the charcoal canister.

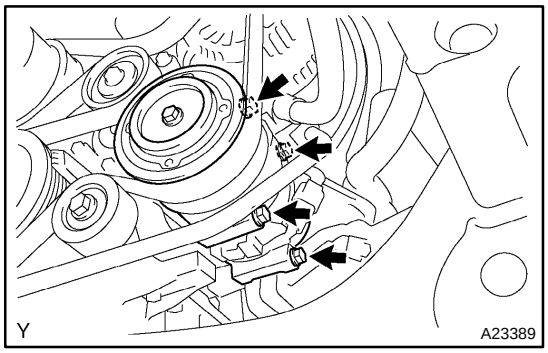

14. DISCONNECT A/C COMPRESSOR FROM ENGINE

(a) Disconnect the A/C compressor connector.
(b) Remove the 3 bolts, and disconnect the A/C compressor from the engine.

HINT:
Suspend the A/C compressor securely.

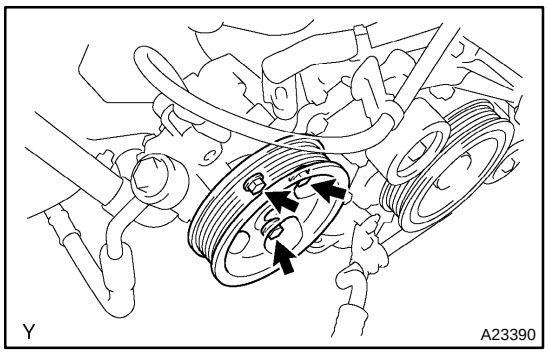

15. DISCONNECT PS PUMP FROM ENGINE

Remove the 3 bolts, and disconnect the PS pump from the engine.

HINT:
Suspend the PS pump securely.

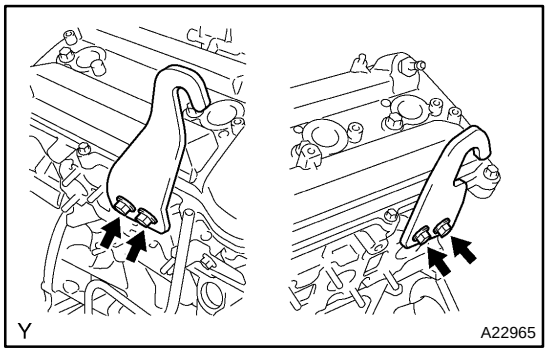

16. REMOVE ENGINE ASSEMBLY FROM VEHICLE

(a) Install the 2 engine hangers with the 4 bolts as shown in the illustration.
Part No. :
Engine hanger No. 1 12281−31060
Engine hanger No. 2 12282−31040
Bolt 90119−08177
Torque: 33 N·m (336 kgf·cm, 24 ft·lbf)
(b) Attach the engine sling device and suspend the engine using a chain block.

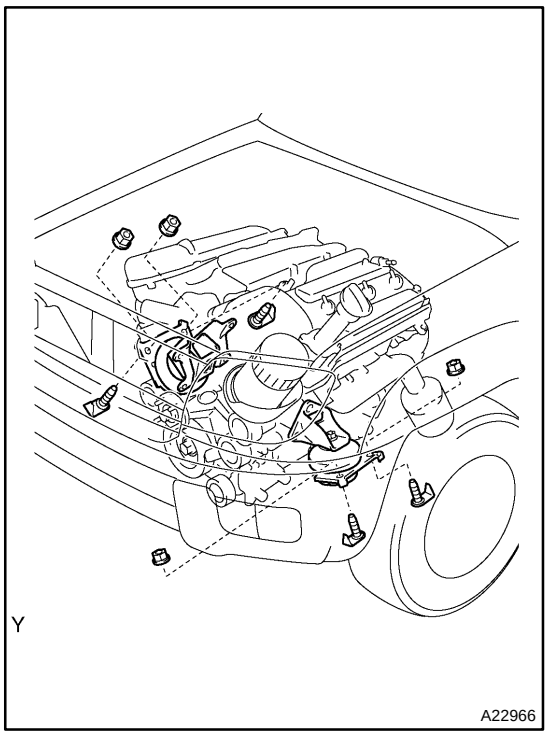

(c) Remove the 4 bolts and 4 nuts, and separate the engine mounting brackets from the frame brackets.
(d) Lift the engine out of the vehicle carefully.

NOTICE:

Make sure the engine is clear of all wiring and hoses.

(e) Place the engine onto a working bench.

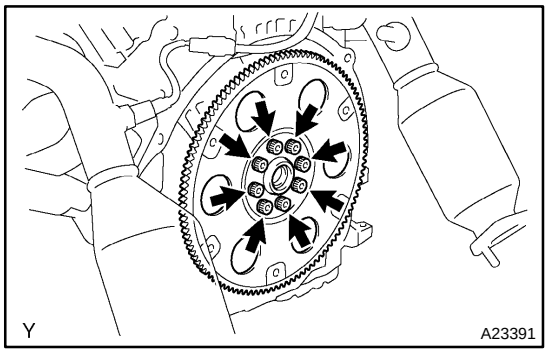

17. REMOVE DRIVE PLATE

Remove the 8 bolts, front spacer, drive plate and rear spacer.

EXHAUST SYSTEM

COMPONENTS

EM1Y3−01

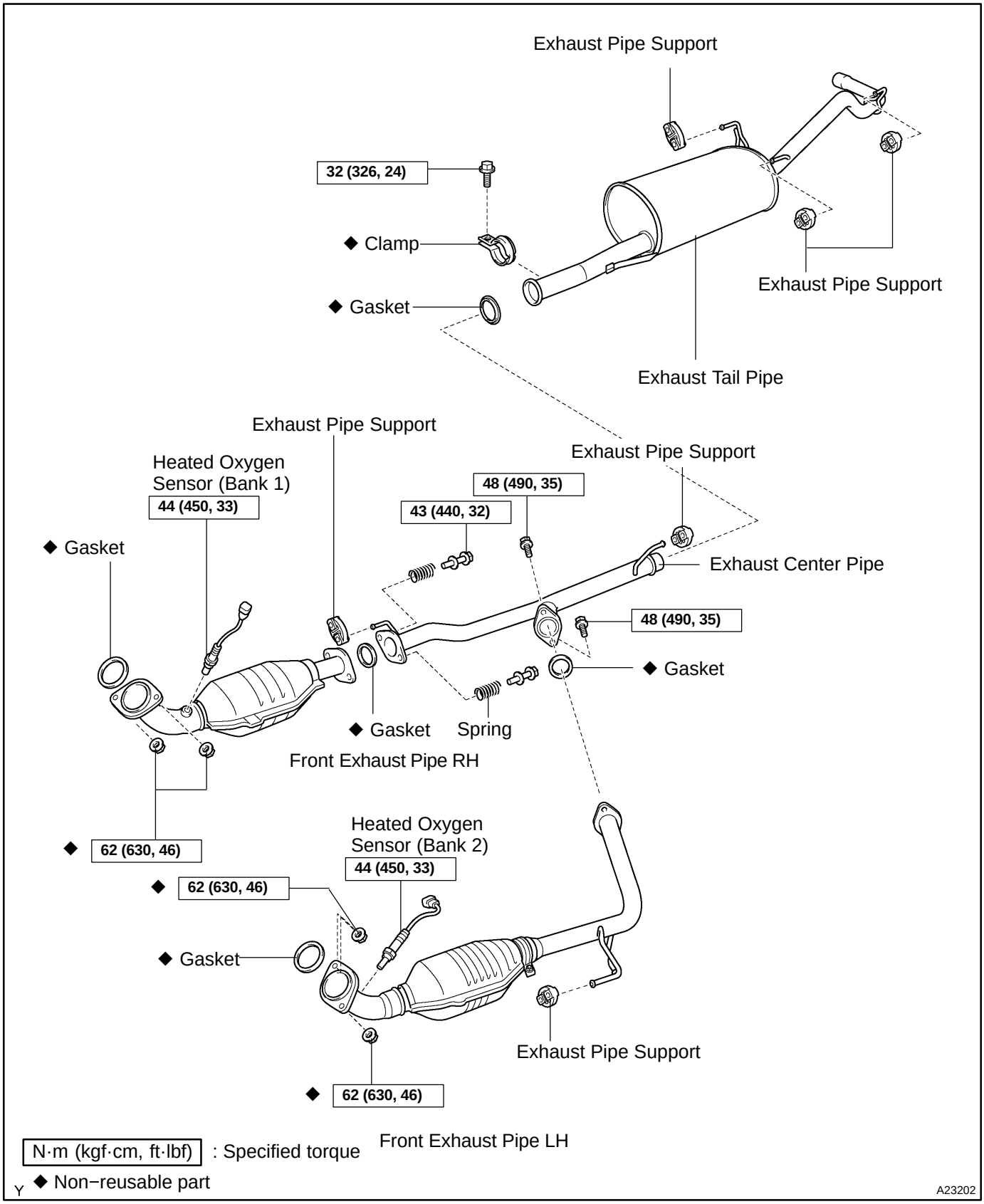

N·m (kgf·cm, ft·lbf) : Specified torque

◆ Non−reusable part

A23202

EM1Y4−01

REPLACEMENT

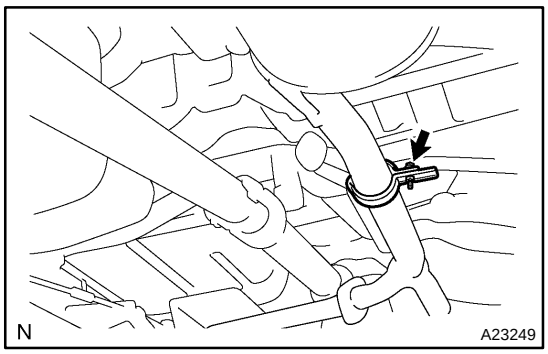

1. REMOVE EXHAUST TAIL PIPE

(a) Remove the bolt and clamp.

(b) Remove the 3 exhaust pipe supports and exhaust tail pipe.

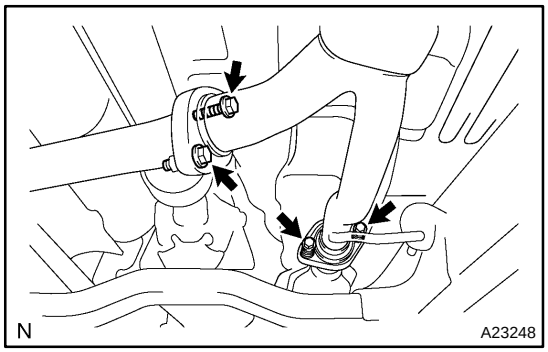

2. REMOVE EXHAUST CENTER PIPE

(a) Remove the 2 bolts and springs.

(b) Remove the 2 bolts.

(c) Remove the 2 exhaust pipe support and exhaust center pipe.

(d) Remove the gasket from the exhaust tail pipe.

3. REMOVE HEATED OXYGEN SENSOR (BANK 1 OXYGEN SENSOR)

(a) Disconnect the heated oxygen sensor.

(b) Remove the heated oxygen sensor.

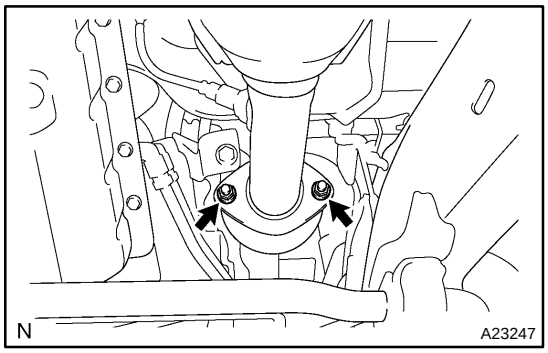

4. REMOVE RH FRONT EXHAUST PIPE

(a) Remove the 2 nuts and RH front exhaust pipe.

(b) Remove the 2 gaskets from the RH front exhaust pipe.

5. REMOVE HEATED OXYGEN SENSOR (BANK 2 OXYGEN SENSOR)

(a) Disconnect the heated oxygen sensor connector.

(b) Remove the heated oxygen sensor.

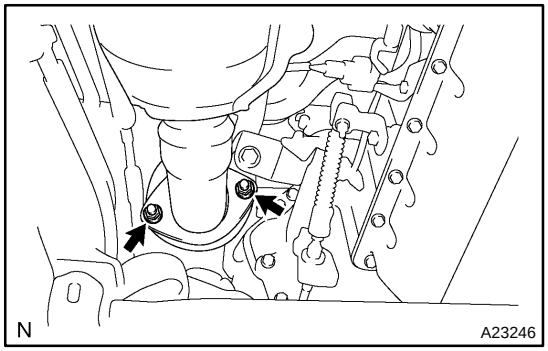

6. REMOVE LH FRONT EXHAUST PIPE

(a) Remove the 2 nuts, exhaust pipe support and LH front exhaust pipe.

(b) Remove the 2 gaskets from the LH front exhaust pipe.

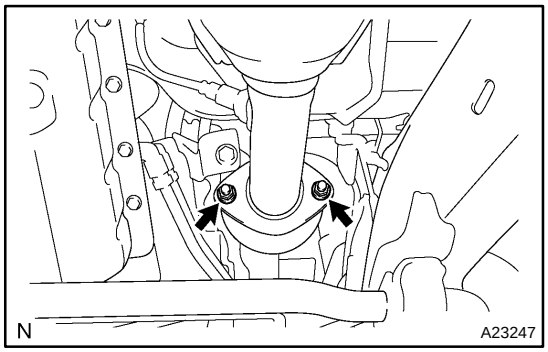

7. INSTALL RH FRONT EXHAUST PIPE

(a) Install 2 new gaskets to the LH front exhaust pipe.

(b) Install the LH front exhaust pipe with the 2 new nuts.
Torque: 62 N·m (630 kgf·cm, 46 ft·lbf)

(c) Install the exhaust pipe support.

8. INSTALL HEATED OXYGEN SENSOR (BANK 1 OXYGEN SENSOR)

(a) Install the heated oxygen sensor.
Torque: 44 N·m (450 kgf·cm, 33 ft·lbf)

(b) Connect the heated oxygen sensor connector.

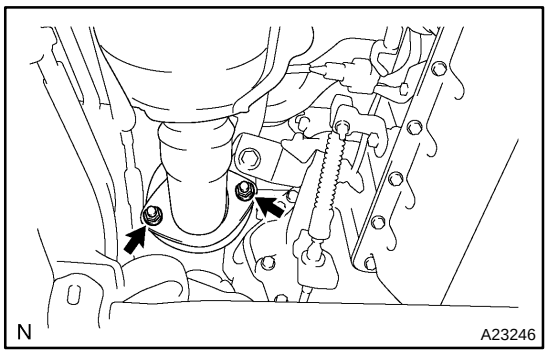

9. INSTALL RH FRONT EXHAUST PIPE

(a) Install 2 new gaskets to the RH front exhaust pipe.

(b) Install the RH front exhaust pipe with the 2 new nuts.

Torque: 62 N·m (630 kgf·cm, 46 ft·lbf)

10. INSTALL HEATED OXYGEN SENSOR (BANK2 OXYGEN SENSOR)

(a) Install the heated oxygen sensor.

Torque: 44 N·m (450 kgf·cm, 33 ft·lbf)

(b) Connect the heated oxygen sensor connector.

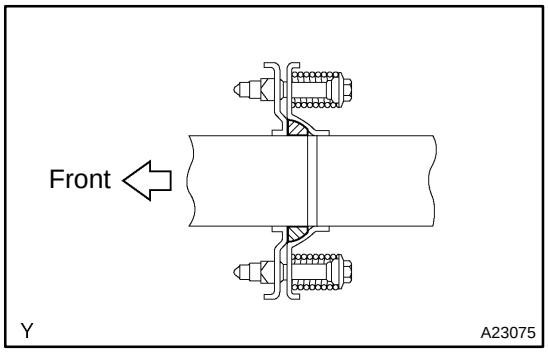

11. INSTALL EXHAUST CENTER PIPE

(a) Using a vernier caliper, measure the free length of the spring.

Minimum length: 40.5 mm (1.5945 in.)

If the free length is less than minimum, replace the spring.

(b) Install the 2 exhaust pipe supports.

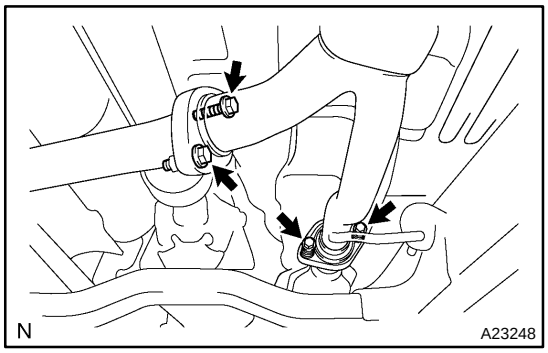

(c) Install the 2 bolts.

Torque: 48 N·m (490 kgf·cm, 35 ft·lbf)

(d) Install the 2 bolts and springs.

Torque: 43 N·m (440 kgf·cm, 32 ft·lbf)

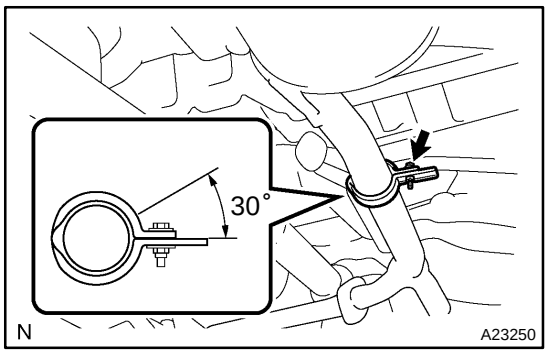

12. INSTALL EXHAUST TAIL PIPE

(a) Install a new gasket to the exhaust center pipe.

(b) Install the 3 exhaust pipe supports.

(c) Install a new clamp and bolt.

Torque: 32 N·m (326 kgf·cm, 24 ft·lbf)

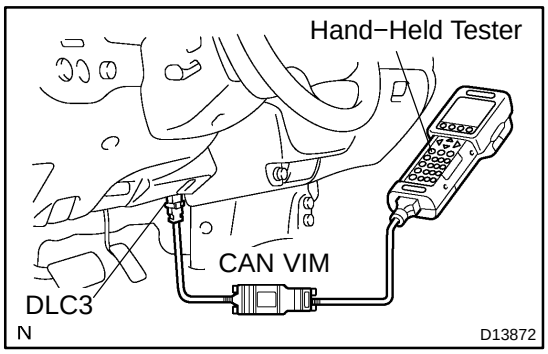

IDLE SPEED

EM1XI−01

INSPECTION

1. When using a hand−held tester or OBD II scan tool.

(a) Connect a hand−held tester to the Controller Area Network Vehicle Interface Module (CAN VIM). Then connect the CAN VIM to the Date Link Connector 3 (DLC3).

(b) Please refer to the hand−held tester operator's manual for further details.

(c) Switch the air conditioning OFF.

(d) Race the engine at 2,500 rpm for approx. 90 seconds.

(e) Check the idle speed.

Idle speed: 650 to 750 rpm
(Transmission in neutral position)

If the idle speed is not as specified, check the air intake system.

(f) Disconnect the hand−held tester or OBD II scan tool from the DLC3.

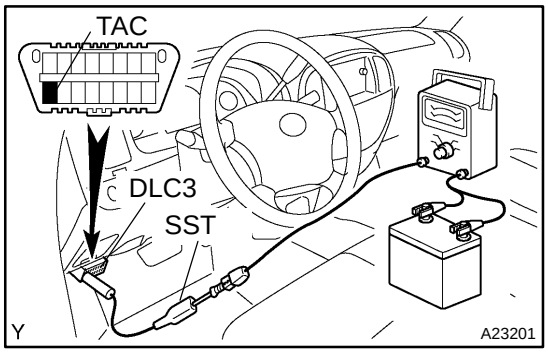

2. When not using a hand−held tester or OBD II scan tool.

(a) Using SST, connect the tachometer probe to terminal TAC of the DLC3.

SST 09843−18030

(b) Switch the air conditioning OFF.

(c) Race the engine at 2,500 rpm for approx. 90 seconds.

(d) Check the idle speed.

Idle speed: 650 to 750 rpm
(Transmission in neutral position)

If the idle speed is not as specified, check the air intake system.

(e) Disconnect the tachometer from the DLC3.

IGNITION TIMING

EM1XH−01

INSPECTION

1. WARM UP ENGINE

Allow the engine to warm up to normal operating temperature.

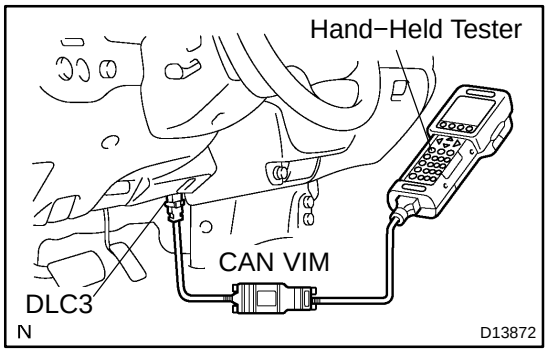

2. INSPECT IGNITION TIMING

(a) When using a hand−held tester or OBD II scan tool.

(1) Connect a hand−held tester to the Controller Area Network Vehicle Interface Module (CAN VIM). Then connect the CAN VIM to the Date Link Connector 3 (DLC3).

(2) Please refer to the hand−held tester operator's manual for further details.

Ignition timing: 7 to 24° BTDC at idle
(Transmission in neutral)

(3) Disconnect the hand−held tester or OBD II scan tool from the DLC3.

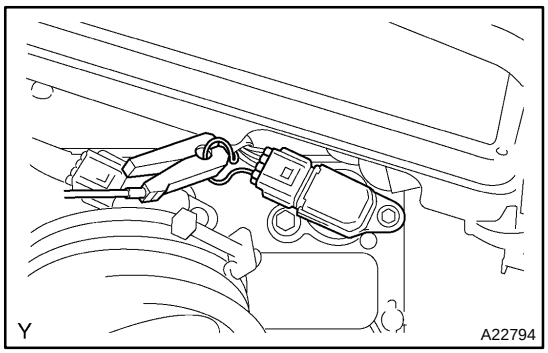

(b) When not using a hand−held tester or OBD II scan tool.

(1) Remove the air cleaner cap.

(2) Connect the tester probe of a timing light to the wire of the ignition coil connector for the No. 1 cylinder.

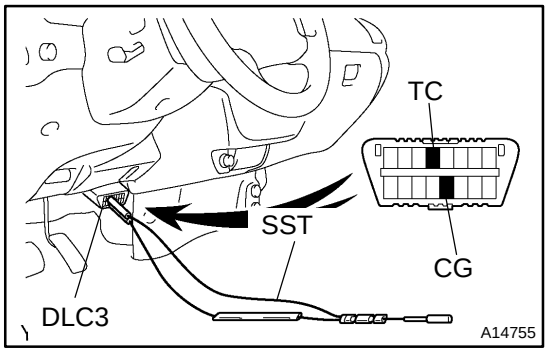

(3) Using SST, connect terminals TC and CG of the DLC3.

SST 09843−18040

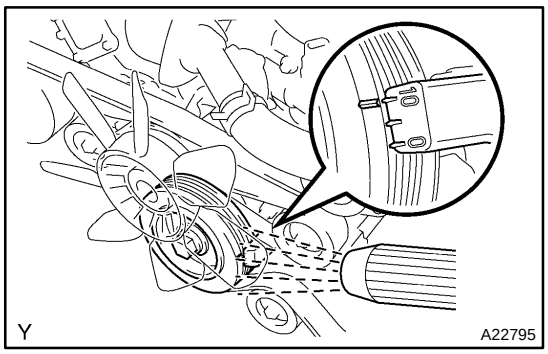

(4) Using the timing light, check the ignition timing.

Ignition timing: 8 to 12° BTDC at idle
(Transmission in neutral position)

(5) Remove the SST from the DLC3.

(6) Check the ignition timing.

Ignition timing: 7 to 24° BTDC at idle
(Transmission in neutral position)

(7) Disconnect the timing light from the engine.

(8) Install the air cleaner cap.

TIMING CHAIN

COMPONENTS

EM1XJ−01

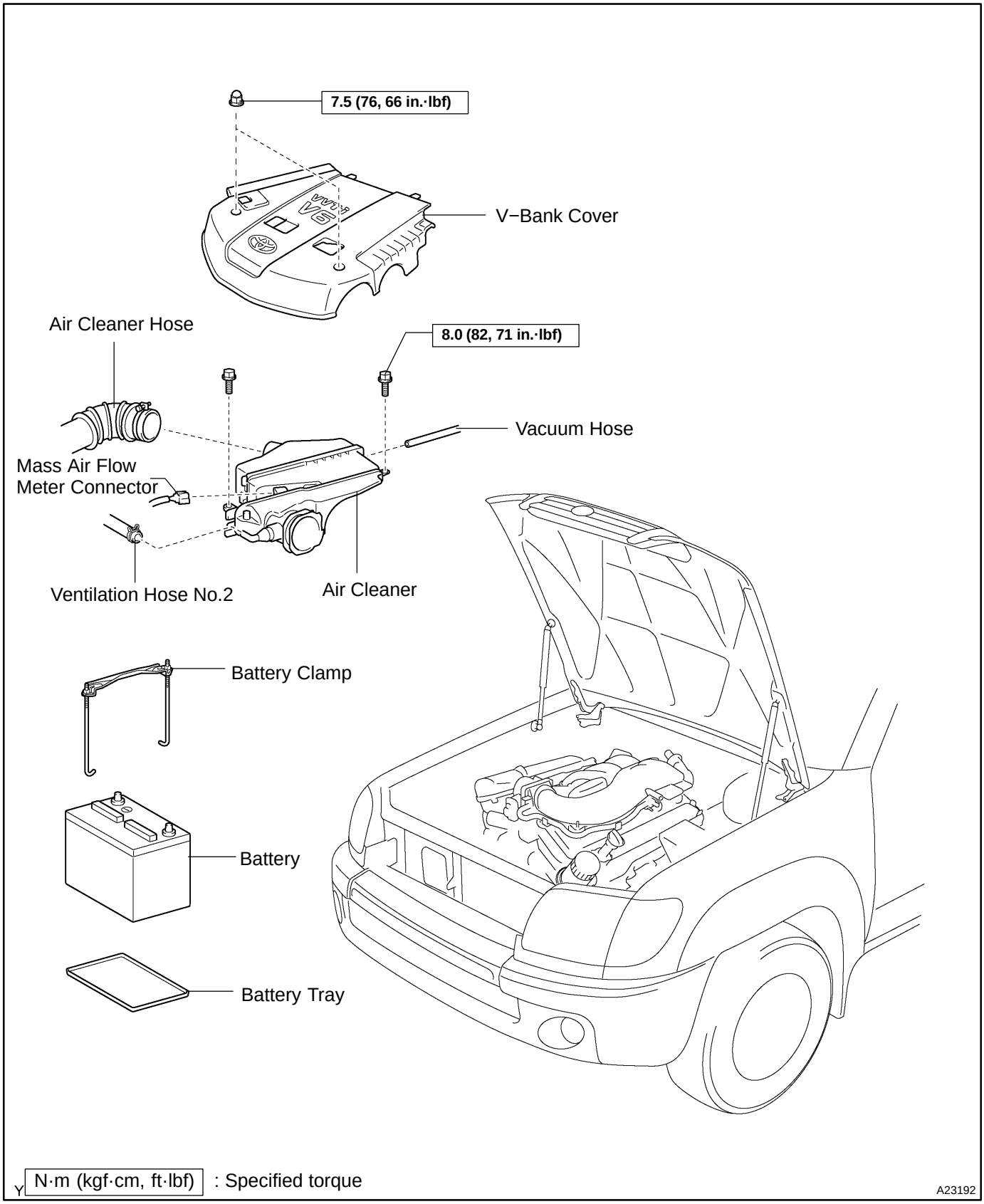

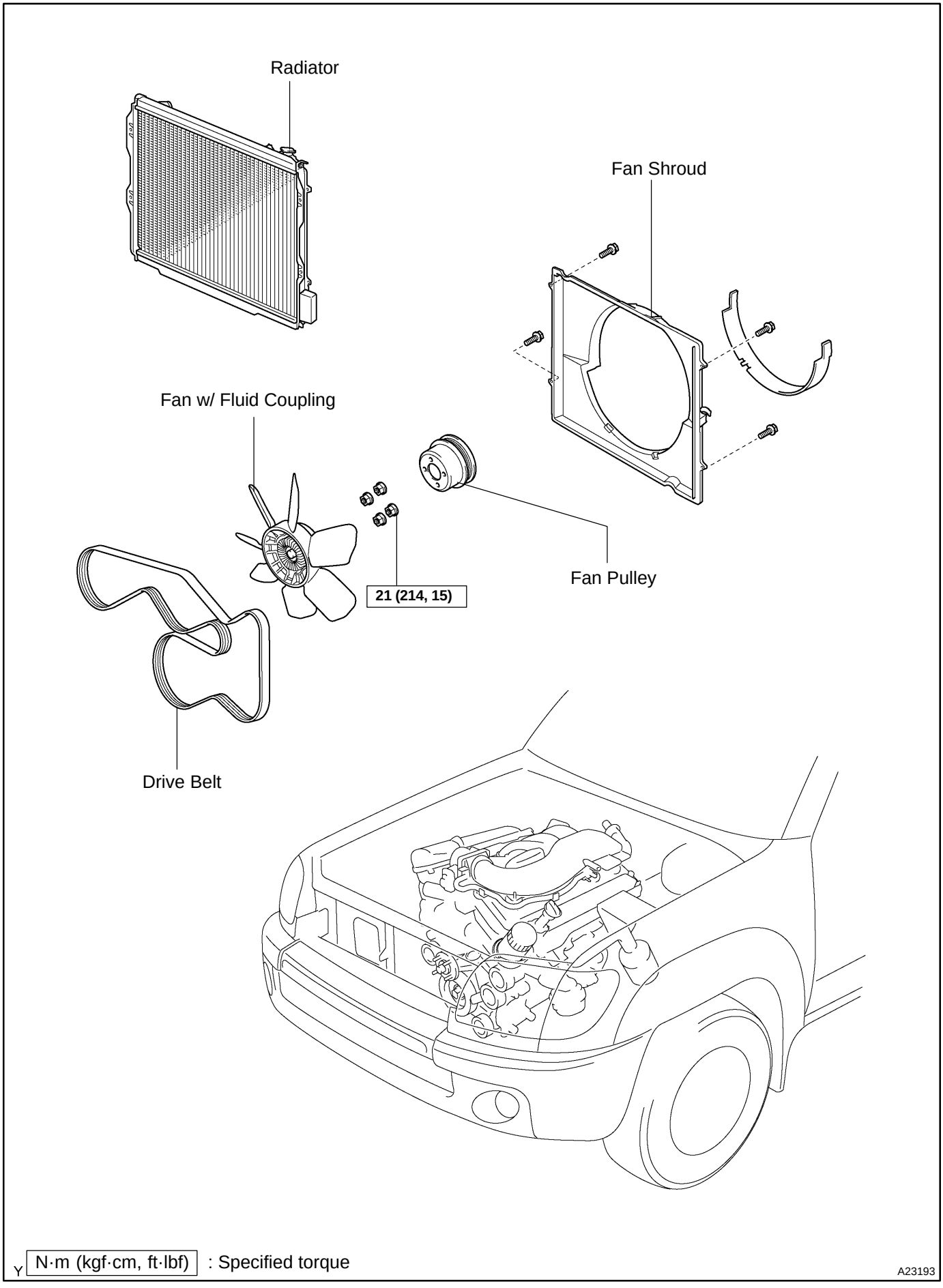
Radiator
Fan Shroud
Fan w/ Fluid Coupling
21 (214, 15)
Fan Pulley
Drive Belt
Y N·m (kgf·cm, ft·lbf) : Specified torque
A23193

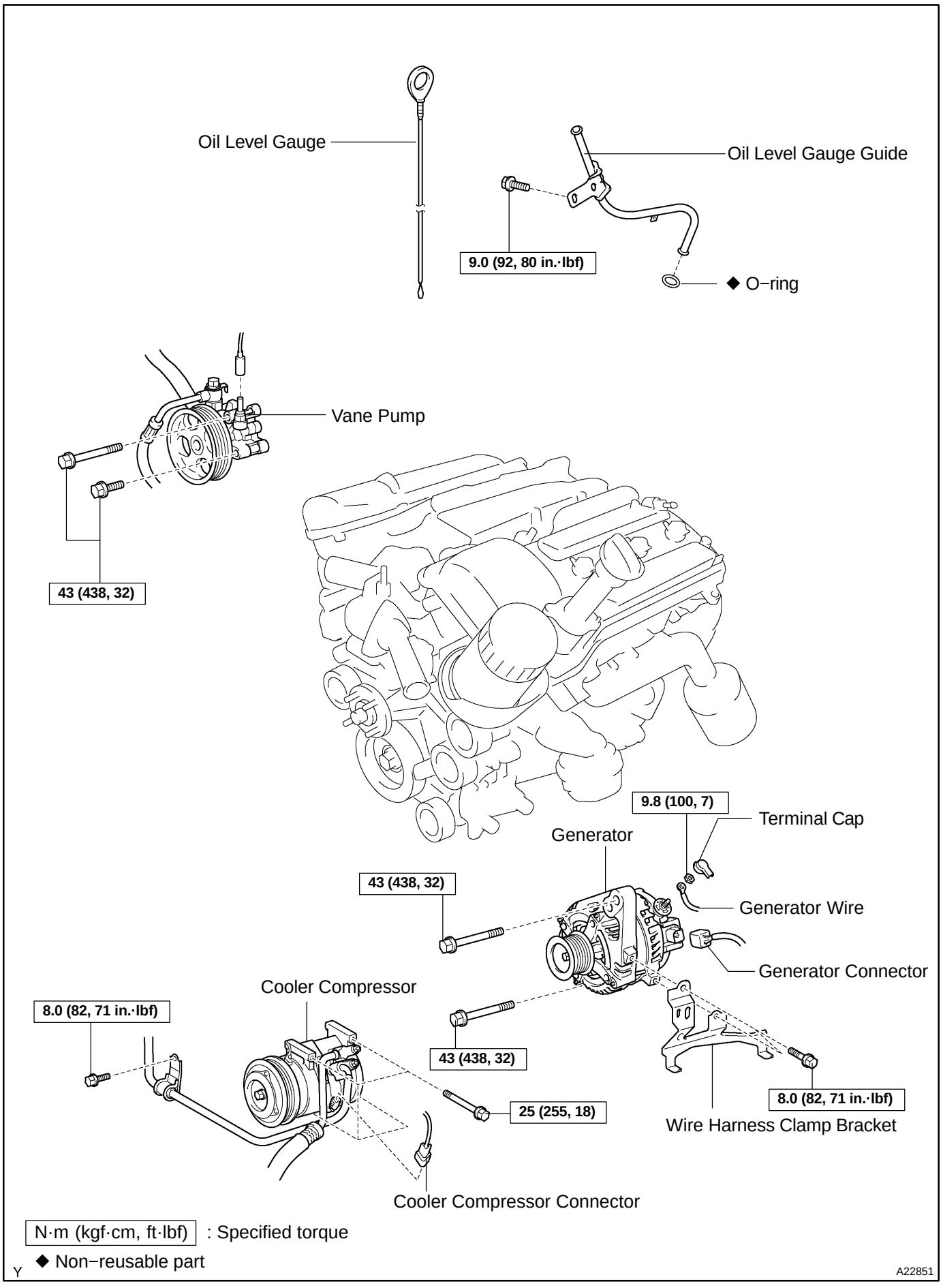
Oil Level Gauge
Oil Level Gauge Guide
9.0 (92, 80 in.·lbf)
◆ O−ring
Vane Pump
43 (438, 32)
9.8 (100, 7)
Terminal Cap
Generator
43 (438, 32)
Generator Wire
Generator Connector
Cooler Compressor
8.0 (82, 71 in.·lbf)
43 (438, 32)
25 (255, 18)
8.0 (82, 71 in.·lbf)
Wire Harness Clamp Bracket
Cooler Compressor Connector
N·m (kgf·cm, ft·lbf) : Specified torque
◆ Non−reusable part
Y
A22851

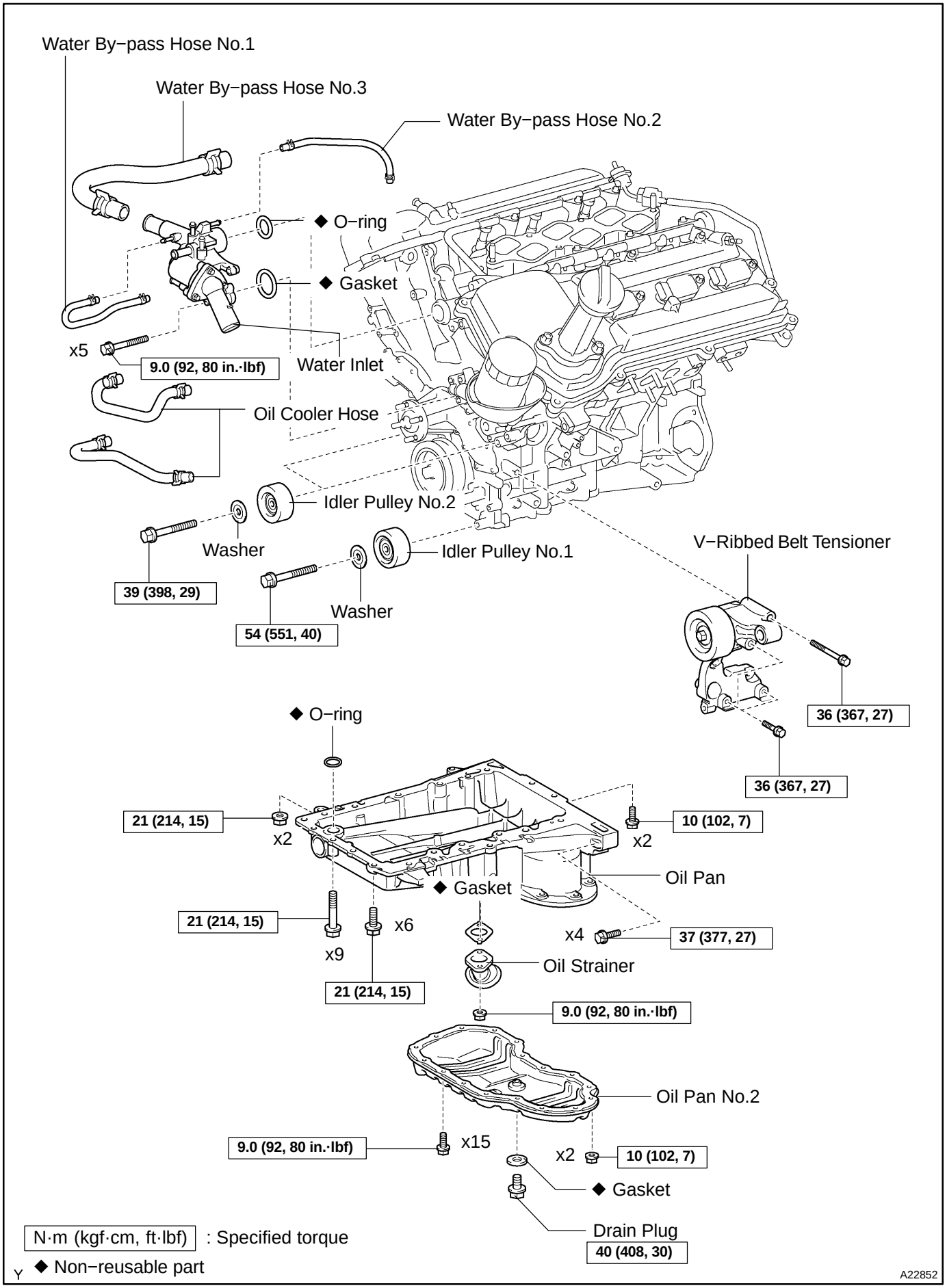
Water By−pass Hose No.1
Water By−pass Hose No.3
Water By−pass Hose No.2
◆ O−ring
◆ Gasket
x5
9.0 (92, 80 in.·lbf)
Water Inlet
Oil Cooler Hose
Idler Pulley No.2
Washer
39 (398, 29)
Idler Pulley No.1
Washer
54 (551, 40)
V−Ribbed Belt Tensioner
36 (367, 27)
36 (367, 27)
◆ O−ring
21 (214, 15)
x2
10 (102, 7)
x2
Oil Pan
◆ Gasket
21 (214, 15)
x6
x9
21 (214, 15)
x4
37 (377, 27)
Oil Strainer
9.0 (92, 80 in.·lbf)
Oil Pan No.2
9.0 (92, 80 in.·lbf)
x15
x2
10 (102, 7)
◆ Gasket
Drain Plug
40 (408, 30)
N·m (kgf·cm, ft·lbf) : Specified torque
◆ Non−reusable part
A22852

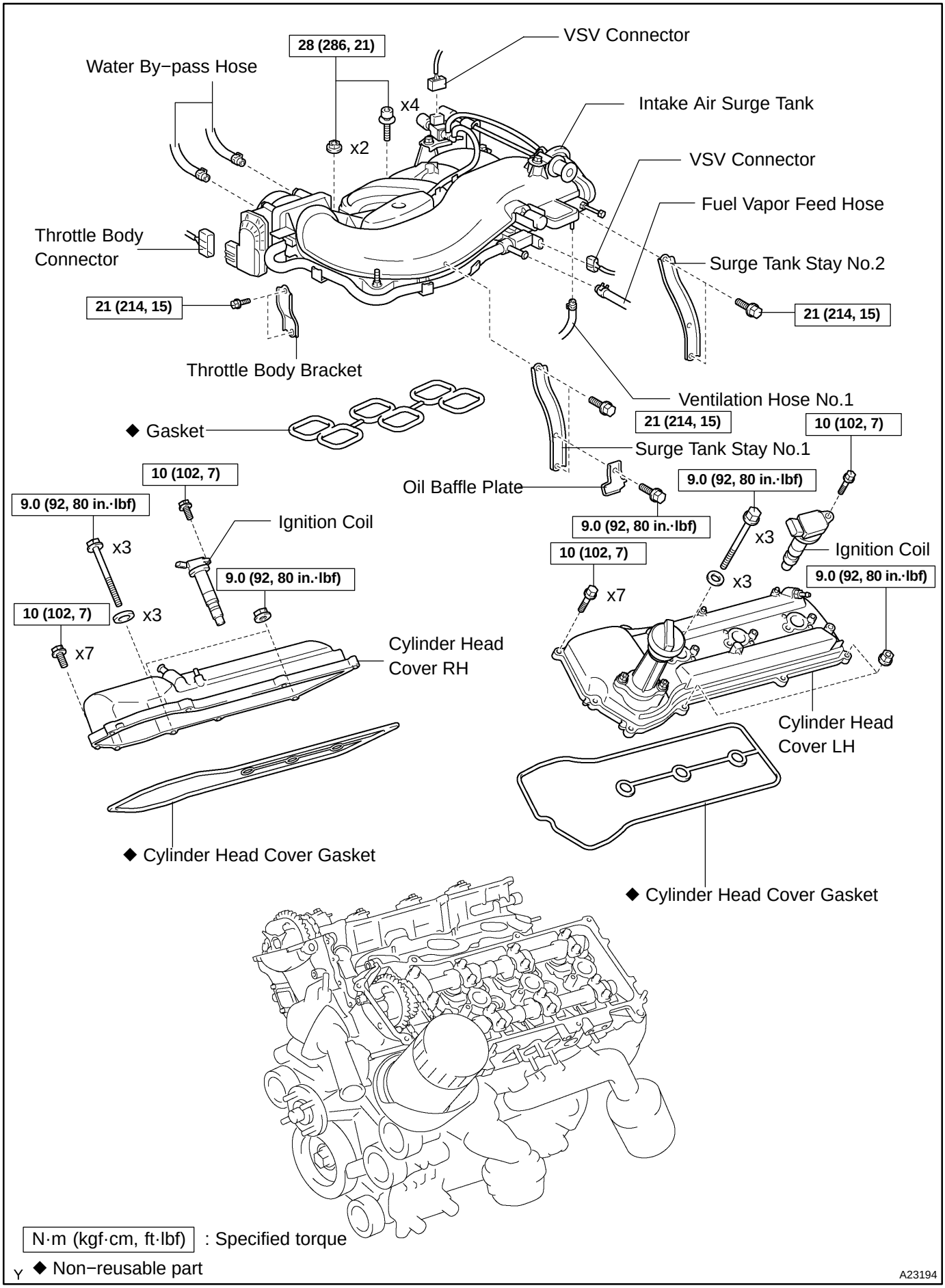
28 (286, 21)
VSV Connector
Water By−pass Hose
x4
Intake Air Surge Tank
x2
VSV Connector
Fuel Vapor Feed Hose
Throttle Body Connector
Surge Tank Stay No.2
21 (214, 15)
21 (214, 15)
Throttle Body Bracket
Ventilation Hose No.1
◆ Gasket
21 (214, 15)
10 (102, 7)
Surge Tank Stay No.1
Oil Baffle Plate
9.0 (92, 80 in.·lbf)
10 (102, 7)
9.0 (92, 80 in.·lbf)
9.0 (92, 80 in.·lbf)
x3
Ignition Coil
x3
Ignition Coil
10 (102, 7)
9.0 (92, 80 in.·lbf)
x7
x3
10 (102, 7)
x3
x7
Cylinder Head Cover RH
Cylinder Head Cover LH
◆ Cylinder Head Cover Gasket
◆ Cylinder Head Cover Gasket
N·m (kgf·cm, ft·lbf) : Specified torque
◆ Non−reusable part
A23194

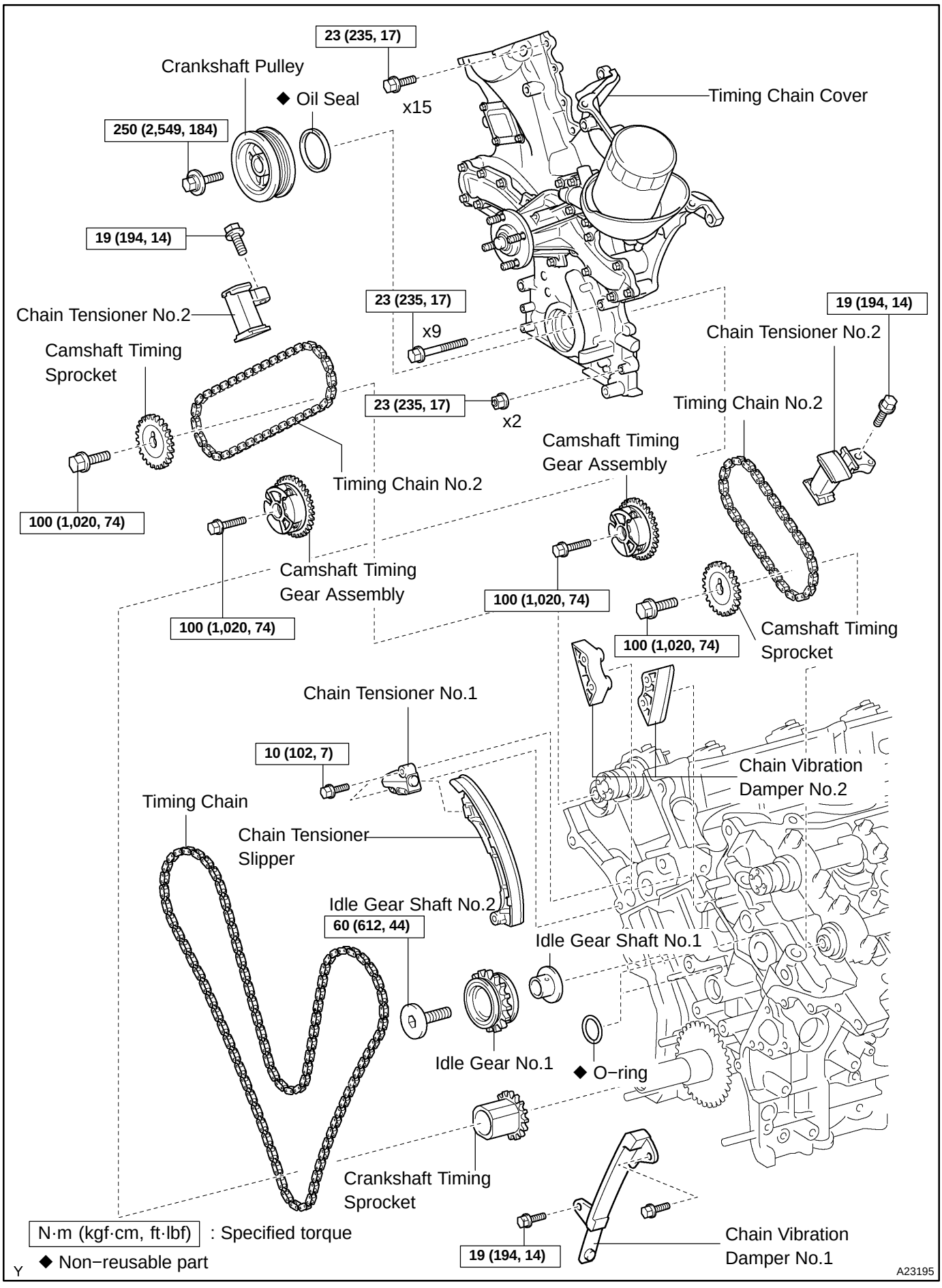
23 (235, 17)
Crankshaft Pulley
◆ Oil Seal
x15
Timing Chain Cover
250 (2,549, 184)
19 (194, 14)
Chain Tensioner No.2
23 (235, 17)
x9
19 (194, 14)
Chain Tensioner No.2
Camshaft Timing Sprocket
23 (235, 17)
x2
Timing Chain No.2
Camshaft Timing Gear Assembly
100 (1,020, 74)
Timing Chain No.2
Camshaft Timing Gear Assembly
100 (1,020, 74)
100 (1,020, 74)
100 (1,020, 74)
Camshaft Timing Sprocket
Chain Tensioner No.1
10 (102, 7)
Chain Vibration Damper No.2
Timing Chain
Chain Tensioner Slipper
Idle Gear Shaft No.2
60 (612, 44)
Idle Gear Shaft No.1
Idle Gear No.1
◆ O−ring
Crankshaft Timing Sprocket
19 (194, 14)
Chain Vibration Damper No.1
N·m (kgf·cm, ft·lbf) : Specified torque
◆ Non−reusable part
Y
A23195

EM1XL−01

INSPECTION

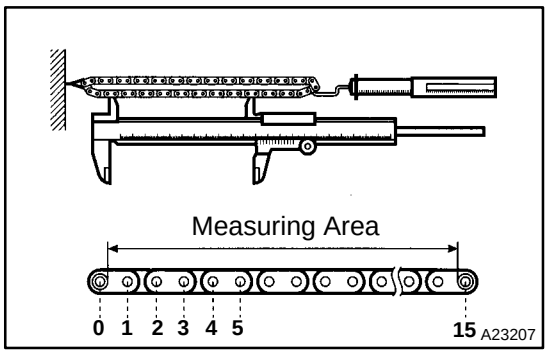

1. INSPECT NO.1 AND NO.2 TIMING CHAINS

Using a spring scale, pull the chain sub assembly with 147 N (15.0 kgf, 33.1 lbf) of force and measure the length of the chain sub assembly using a vernier caliper.

Maximum chain elongation: 146.8 mm (5.780 in.)

NOTICE:

Perform the same measurements by pulling at random in 3 or more places to obtain an average length.

If the elongation is greater than the maximum, replace the chain.

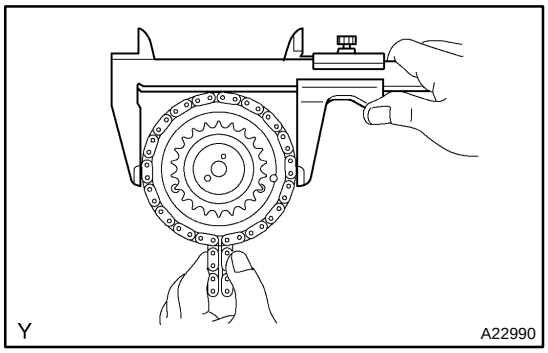

2. INSPECT CAMSHAFT TIMING GEAR ASSEMBLY

(a) Put the No. 1 chain on the larger gear of the camshaft timing gear assembly.

(b) Using a vernier caliper, measure the timing gear with the chain.

Minimum gear diameter (w/ chain):
115.5 mm (4.547 in.)

NOTICE:

The vernier caliper must contact the chain rollers for the measuring.

If the diameter is less than the minimum, replace the No. 1 chain and camshaft timing gear assembly.

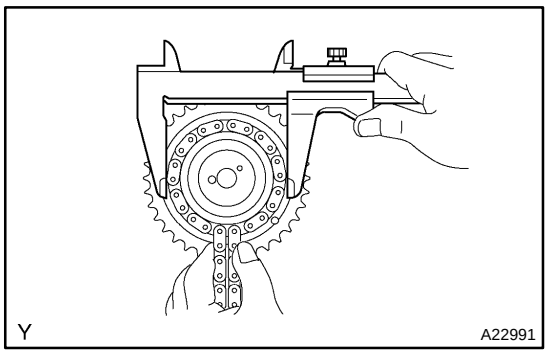

(c) Put the No. 2 chain on the smaller gear of the camshaft timing gear assembly.

(d) Using a vernier caliper, measure the timing gear with the chain.

Minimum gear diameter (w/ chain):
73.1 mm (2.878 in.)

NOTICE:

The vernier caliper must contact the chain rollers for the measuring.

If the diameter is less than the minimum, replace the No. 2 chain and camshaft timing gear assembly.

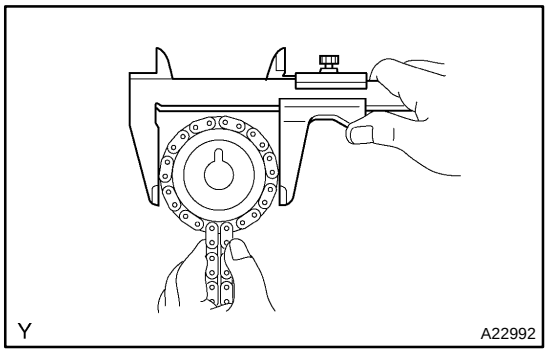

3. INSPECT CAMSHAFT TIMING SPROCKET

(a) Put the No. 2 chain on the camshaft timing sprocket.

(b) Using a vernier caliper, measure the camshaft timing sprocket diameter with the chain .

Minimum gear diameter (w/ chain):
73.1 mm (2.878 in.)

NOTICE:

The vernier caliper must contact the chain rollers for the measuring.

If the diameter is less than the minimum, replace the No. 2 chain and the camshaft timing sprocket.

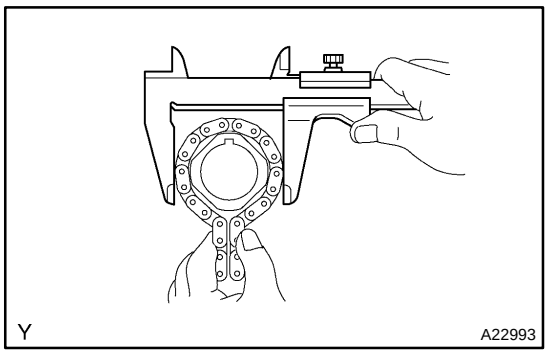

4. INSPECT CRANKSHAFT TIMING SPROCKET

(a) Put the No. 1 chain on the crankshaft timing sprocket.

(b) Using a vernier caliper, measure the crankshaft timing gear diameter with the chain.

Minimum gear diameter (w/ chain):
61.0 mm (2.402 in.)

NOTICE:

The vernier caliper must contact the chain rollers for the measuring.

If the diameter is less than the minimum, replace the No. 1 chain and crankshaft timing sprocket.

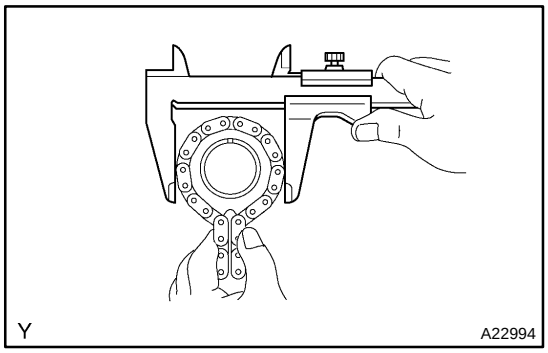

5. INSPECT IDLE GEAR NO.1

(a) Put the No. 1 chain on the idle gear.

(b) Using a vernier caliper, measure the idle gear with the chain.

Minimum gear diameter (w/ chain):
61.0 mm (2.402 in.)

NOTICE:

The vernier caliper must contact the chain rollers for the measuring.

If the diameter is less than the minimum, replace the No. 1 chain and idle gear.

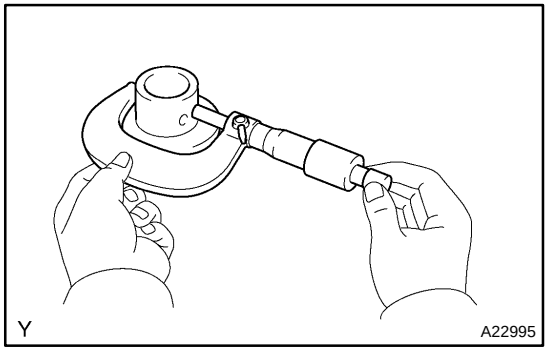

6. INSPECT IDLE GEAR SHAFT OIL CLEARANCE

(a) Using a micrometer, measure the idle gear shaft diameter.

Idle gear shaft diameter:
22.987 to 23.000 mm (0.9050 to 0.9055 in.)

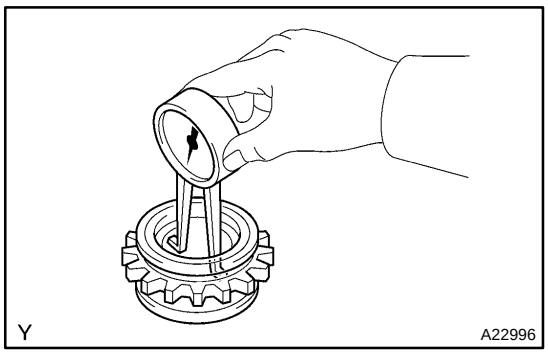

(b) Using a caliper gauge, measure the inside diameter of the idle gear.
Idle gear inside diameter:
23.02 to 23.03 mm (0.9063 to 0.9067 in.)

(c) Subtract the idle gear shaft diameter measurement from the idle gear inside diameter measurement.
Standard oil clearance:
0.020 to 0.043 mm (0.0008 to 0.0017 in.)
Maximum oil clearance:
0.093 mm (0.0037 in.)

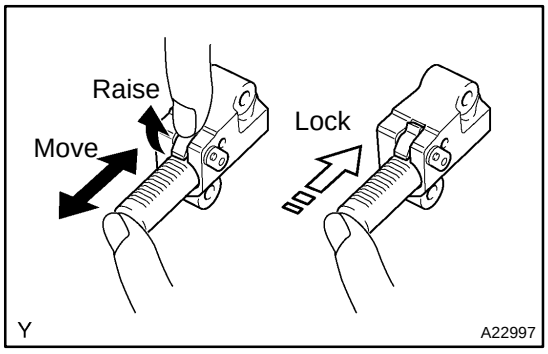

7. INSPECT CHAIN TENSIONER NO.1

(a) Check that the plunger moves smoothly when the ratchet pawl is raised with a finger.

(b) Release the ratchet pawl and check that the plunger is locked in place by the ratchet pawl and does not move when pushing with a finger.

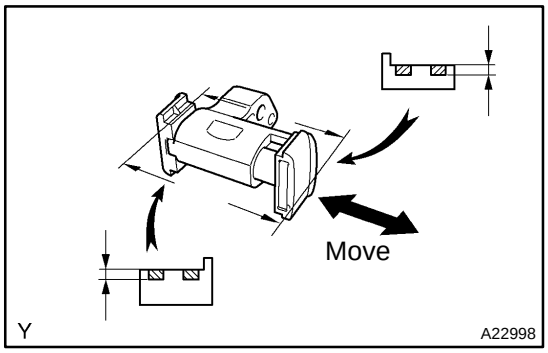

8. INSPECT CHAIN TENSIONER NO.2

(a) Check that the plunger moves smoothly.

(b) Measure the worn depth of the chain tensioner slipper.
Maximum depth: 1.0 mm (0.039 in.)

If the depth is greater than the maximum, replace the chain tensioner No. 2.

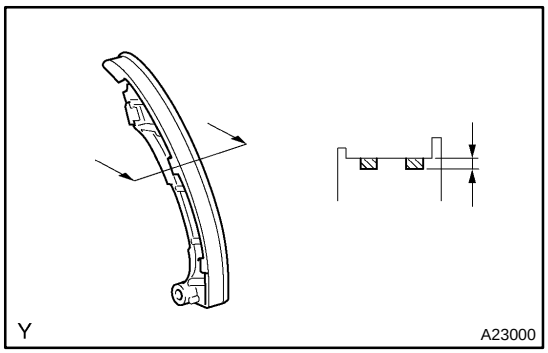

9. INSPECT CHAIN TENSIONER SLIPPER

Measure the worn depth of the chain tensioner slipper.
Maximum depth: 1.0 mm (0.039 in.)

If the depth is greater than the maximum, replace the chain tensioner slipper.

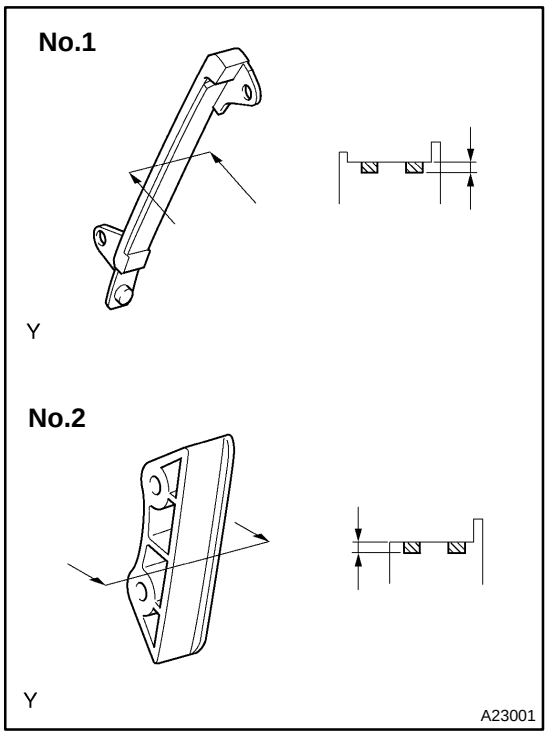

10. INSPECT CHAIN VIBRATION DAMPER NO.1 AND NO.2

Measure the worn depth of the chain vibration damper No. 1 and No. 2.

Maximum depth: 1.0 mm (0.039 in.)

If the depth is greater than the maximum, replace the chain vibration damper No. 1 or No.2.

EM1XN−01

INSTALLATION

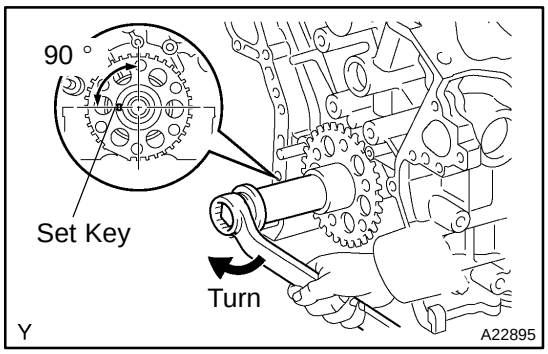

1. SET CRANKSHAFT POSITION

Using the crankshaft pulley set bolt, turn the crankshaft, and set the crankshaft set key into the left horizontal position.

NOTICE:

Having the crankshaft at the wrong angle can cause the piston head and valve head to come into contact with each other when you install the camshaft, causing damage. So always set the crankshaft at the correct angle.

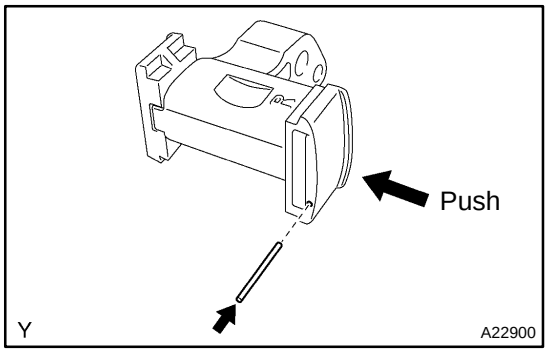

2. INSTALL CHAIN TENSIONER NO.2

(a) While pushing in the tensioner, insert a pin of ϕ 1.0 mm (0.039 in.) into the hole to fix it.

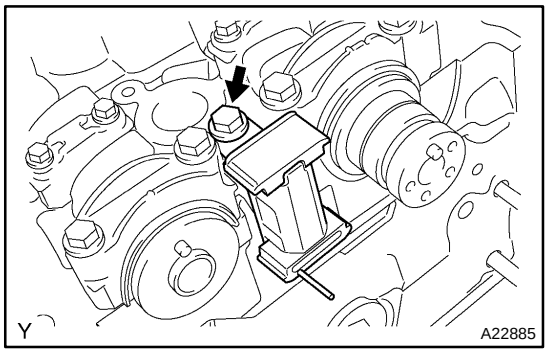

(b) Install the chain tensioner No. 2 with the bolt.
Torque: 19 N·m (194 kgf·cm, 14 ft·lbf)

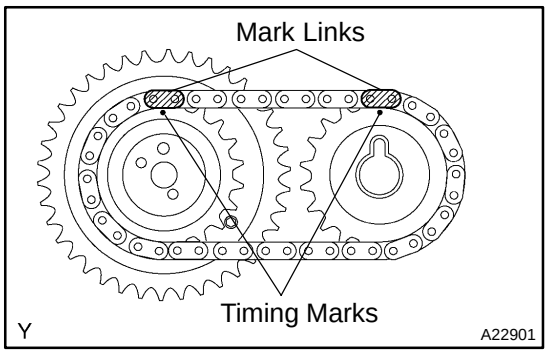

3. INSTALL NO.2 TIMING CHAIN

(a) Align the mark links (yellow) with the timing marks (1−dot mark) of the camshaft timing gear assembly and camshaft timing sprocket as shown in the illustration.

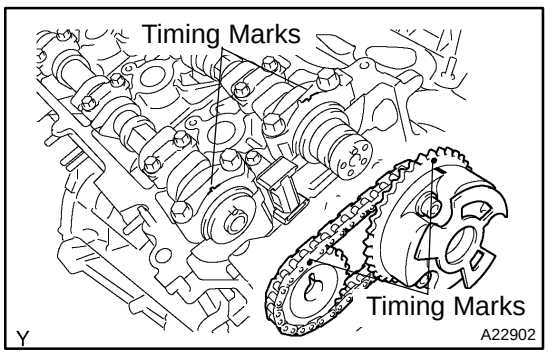

(b) Align the timing marks on the camshaft timing gear assembly and camshaft timing sprocket with the timing marks on the bearing caps, and install the camshaft timing gears with the chain to the RH camshafts.

(c) Temporarily install the 2 camshaft timing gear bolts.

NOTICE:

Do not push camshaft timing gear assembly to the camshaft forcibly when installing it.

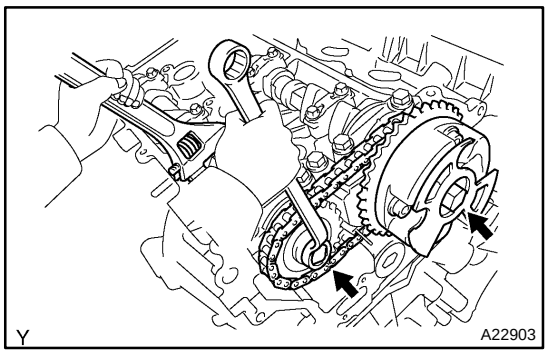

(d) Hold the hexagonal portion of the camshaft with a wrench, and tighten the 2 bolts.
Torque: 100 N·m (1,020 kgf·cm, 74 ft·lbf)
(e) Remove the pin from the chain tensioner No. 2.

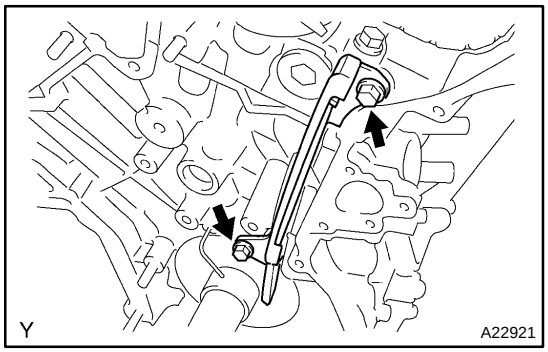

4. INSTALL CHAIN VIBRATION DAMPER NO.1
(a) Install the chain vibration damper No. 1 with the 2 bolts.
Torque: 19 N·m (194 kgf·cm, 14 ft·lbf)

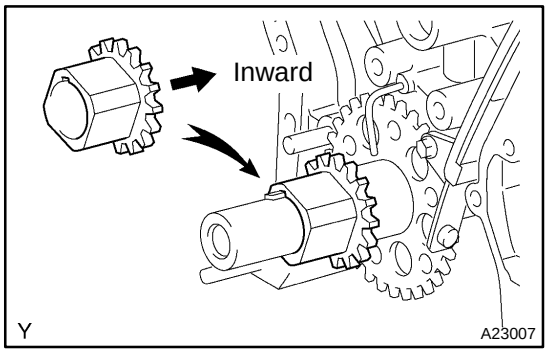

5. INSTALL CRANKSHAFT TIMING SPROCKET
(a) Align the timing gear set key with the key groove of the timing sprocket.
(b) Install the timing gear onto the crankshaft with the sprocket side facing inward.
6. INSTALL CHAIN TENSIONER SLIPPER

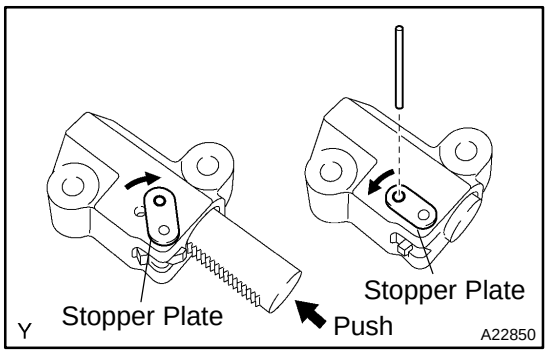

7. INSTALL CHAIN TENSIONER NO.1
(a) While turning the stopper plate of the tensioner clockwise, push in the plunger of the tensioner as shown in the illustration.
(b) While turning the stopper plate of the tensioner counterclockwise, insert a bar of ϕ 3.5 mm (0.138 in.) into the holes in the stopper plate and tensioner to fix the stopper plate.
(c) Install the chain tensioner with the 2 bolts.
Torque: 10 N·m (102 kgf·cm, 7 ft·lbf)

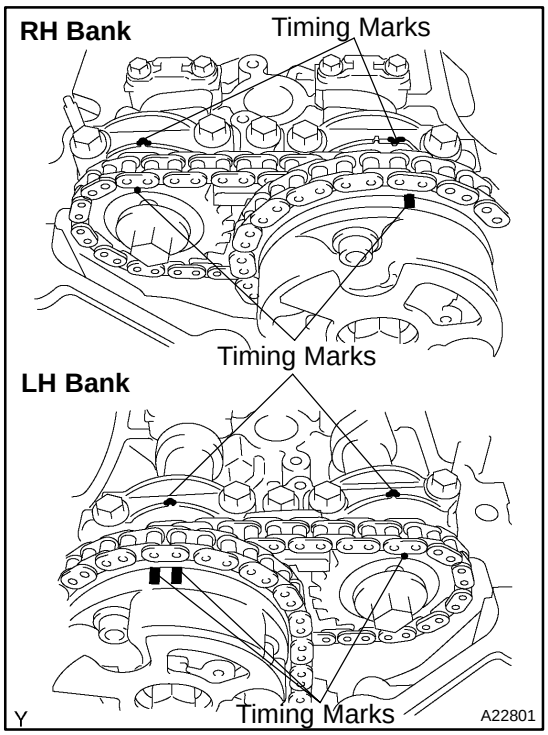

8. SET NO.1 CYLINDER TO TDC/COMPRESSION

(a) Align the timing marks of the camshaft timing gear assembly, camshaft timing sprocket and bearing caps.

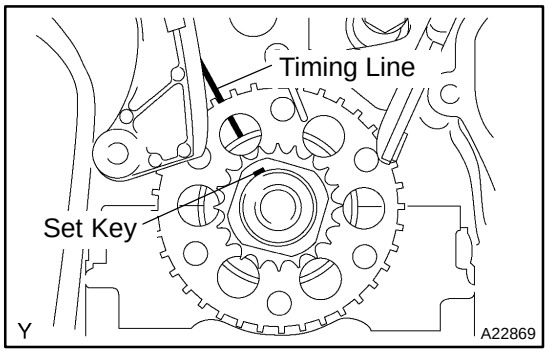

(b) Using the crankshaft pulley set bolt, turn the crankshaft to align the crankshaft set key with the timing line of the cylinder block.

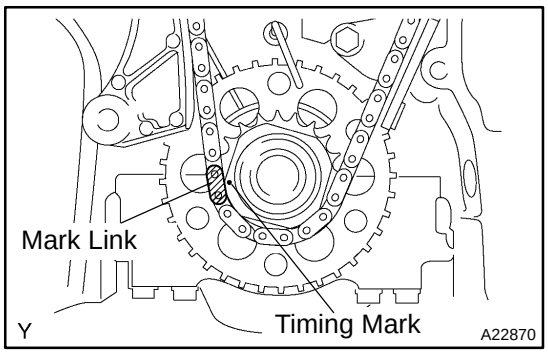

9. INSTALL TIMING CHAIN NO.1

(a) Align the mark link (yellow) with the timing mark of the crankshaft timing sprocket.

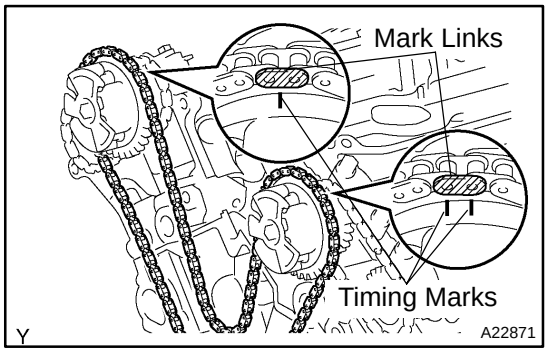

(b) Align the mark links (orange) with the timing marks of the camshaft timing gear assembly and camshaft timing sprocket, and install the chain.

10. INSTALL CHAIN VIBRATION DAMPER NO.2

Install the 2 chain vibration damper No.2.

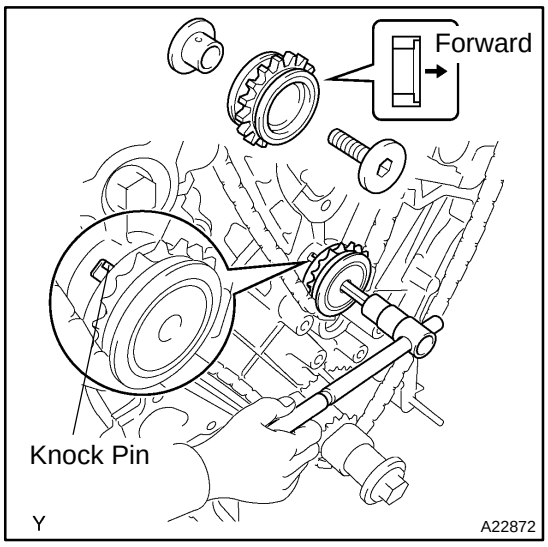

11. INSTALL IDLE GEAR NO.1

(a) Apply a light coat of engine oil to the rotating surface of the idle gear shaft No. 1.

(b) Temporarily install the idle gear shaft No. 1 and idle gear No. 1 with the idle gear shaft No. 2 while aligning the knock pin of the idle gear shaft No. 1 with the knock pin groove of the cylinder block.

NOTICE:

Be careful of the idle gear direction.

(c) Using a 10 mm hexagon wrench, tighten the idle gear shaft No. 2.

Torque: 60 N·m (612 kgf·cm, 44 ft·lbf)

(d) Remove the bar from the chain tensioner.

12. INSTALL TIMING CHAIN COVER

(a) Remove any old packing (FIPG) material and be careful not to drop any oil on the contact surfaces of the timing chain cover, cylinder head and cylinder block.

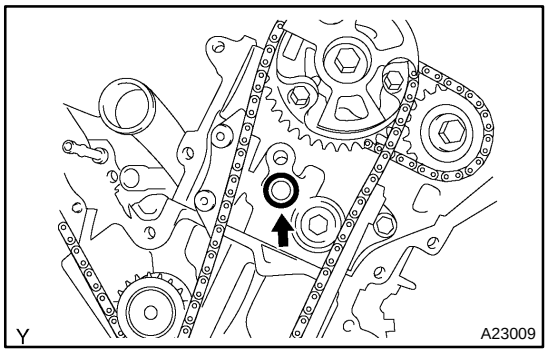

(b) Install a new O−ring to the LH cylinder head as shown in the illustration.

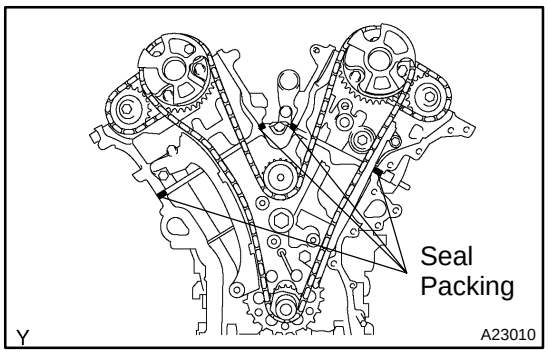

(c) Apply a continuous bead of seal packing (diameter 3 to 4 mm (0.12 to 0.16 in.)) to 4 locations as shown in the illustration.

Seal packing: Part No. 08826−00080 or equivalent

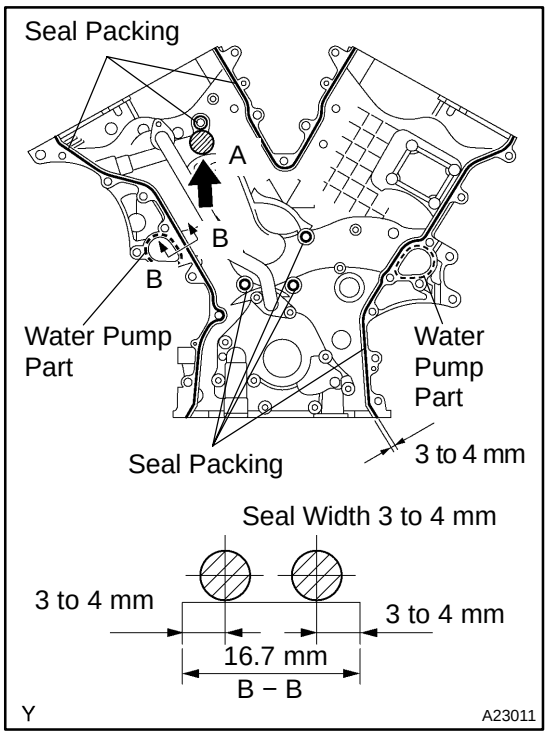

(d) Apply a continuous bead of seal packing (diameter 3 to 4 mm (0.12 to 0.16 in.)) to the timing chain cover as shown in the illustration.

Seal packing:

Water pump part: Part No. 08826−00100 or equivalent

Other part: Part No. 08826−00080 or equivalent

NOTICE:

- **Install the timing chain cover within 3 minutes after applying seal packing. After installing it, the timing chain cover bolts and nuts must be tightened within 15 minutes. Otherwise the seal packing must be removed and reapplied.**
- **Do not apply seal packing to the "A" as shown in the illustration.**

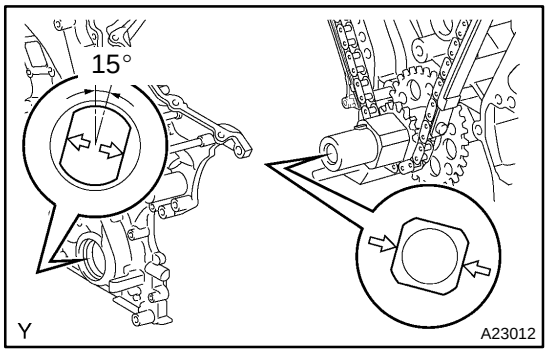

(e) Align the key way of the oil pump drive rotor with the rectangular portion of the crankshaft timing gear, and slide the timing chain cover into place.

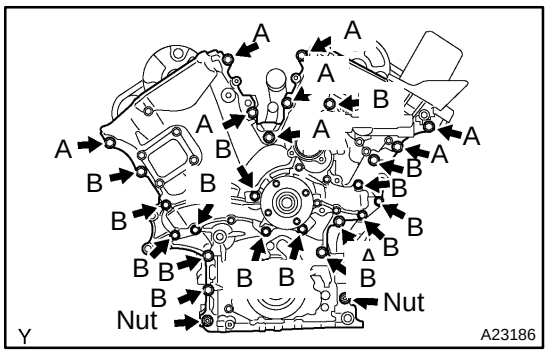

(f) Install the timing chain cover with the 24 bolts and 2 nuts. Tighten the bolts and nuts uniformly in several steps.

Torque: 23 N·m (235 kgf·cm, 17 ft·lbf)

NOTICE:

- **Pay attention not to wrap the chain and slipper over the timing chain cover seal line.**
- **Install the water pump within 15 minutes after installing the timing chain cover.**

HINT:

Each bolt length is as follows:

A: 25 mm (0.98 in.)

B: 55 mm (2.17 in.)

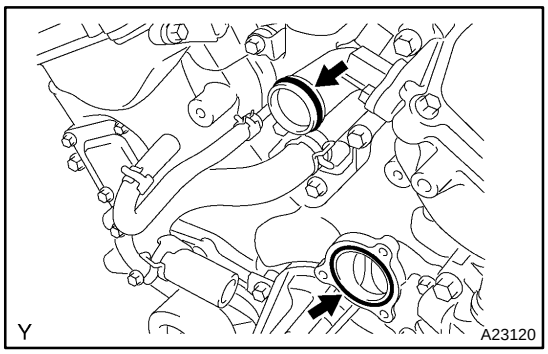

13. INSTALL WATER INLET

(a) Install a new O−ring to the water outlet pipe.
(b) Install a new gasket to the water pump.
(c) Apply soapy water to the O−ring.

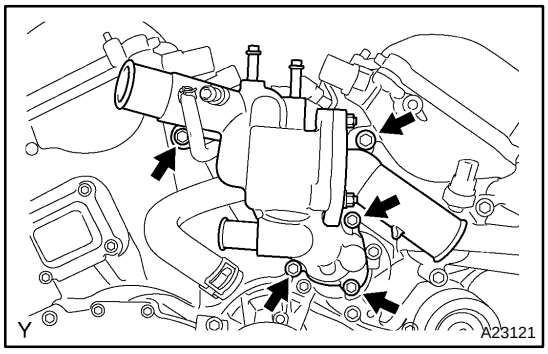

(d) Install the water inlet with the 5 bolts.
Torque: 9.0 N·m (92 kgf·cm, 80 in.·lbf)
(e) Connect the 5 water by−pass hoses.
(f) Connect the 2 radiator hoses.
(g) Connect the 2 oil cooler hoses (w/ oil cooler).

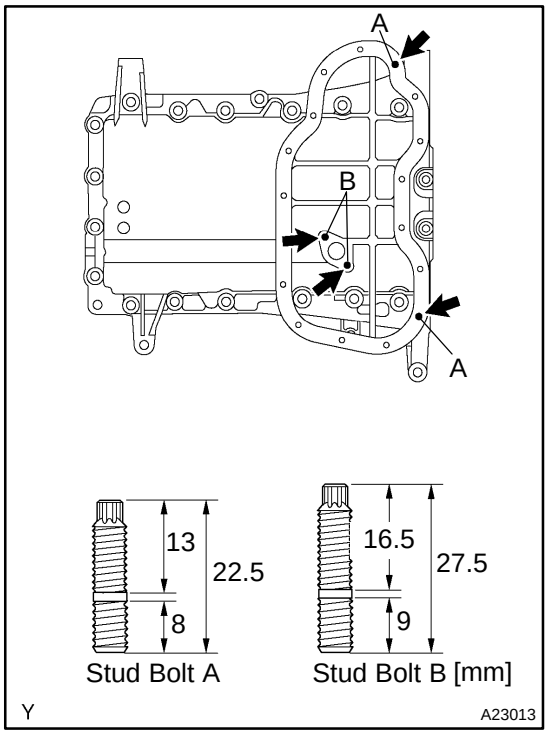

14. INSTALL OIL PAN

(a) Install the 4 stud bolts.
Torque: 4.0 N·m (41 kgf·cm, 35 in.·lbf)
(b) Remove any old packing material (FIPG) and be careful not to drop any oil on the contact surfaces of the cylinder block, rear oil seal retainer and oil pan.

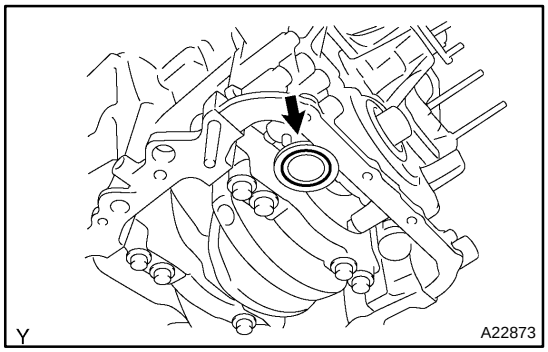

(c) Install a new O−ring to the oil pump.

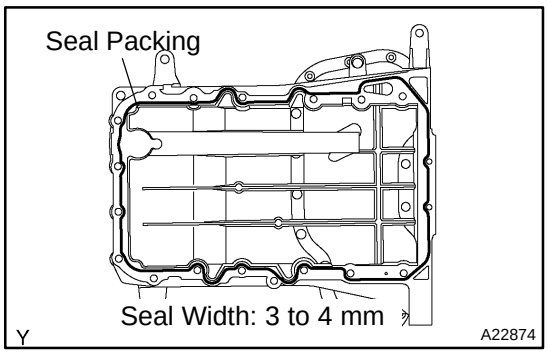

(d) Apply a continuous bead of seal packing (diameter 3 to 4 mm (0.12 to 0.16 in.)) to the oil pan as shown in the illustration.

Seal packing: Part No. 08826−00080 or equivalent

NOTICE:

Install the oil pan within 3 minutes after applying seal packing. After installing it, the oil pan bolts and nuts must be tightened within 15 minutes. Otherwise the seal packing must be removed and reapplied.

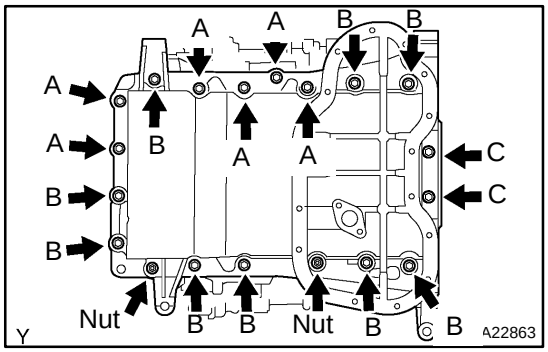

(e) Install the oil pan with the 17 bolts and 2 nuts. Tighten the bolts and nuts uniformly in several steps.

Torque:

Bolt A, B, Nut: 21 N·m (214 kgf·cm, 15 ft·lbf)

Bolt C: 10 N·m (102 kgf·cm, 7 ft·lbf)

HINT:

Each bolt length is as follows:

A: 25 mm (0.98 in.)

B: 45 mm (1.77 in.)

C: 14 mm (0.55 in.)

(f) Install the 4 housing bolts.

Torque: 37 N·m (377 kgf·cm, 27 ft·lbf)

(g) Install the flywheel housing under cover.

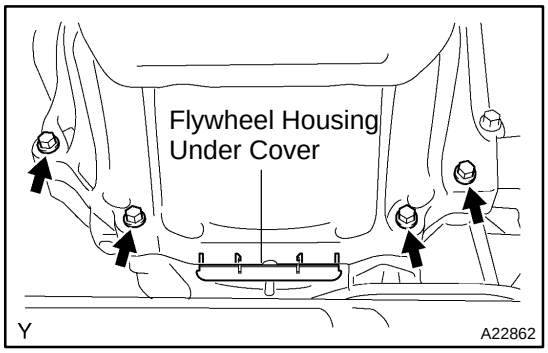

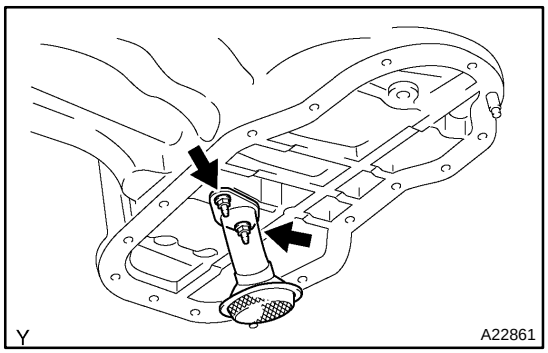

15. INSTALL OIL STRAINER

(a) Install a new gasket and the oil strainer with the 2 nuts.

Torque: 9.0 N·m (92 kgf·cm, 80 in.·lbf)

16. INSTALL OIL PAN NO.2

(a) Remove any old packing material (FIPG) and be careful not to drop any oil on the contact surfaces of the oil pan and oil pan No. 2.

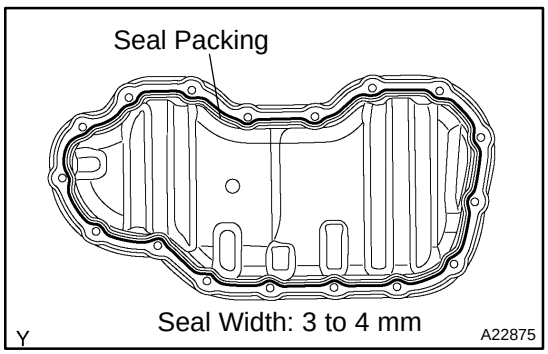

(b) Apply a continuous bead of the seal packing (diameter 3 to 4 mm (0.12 to 0.16 in.)) as shown in the illustration.

Seal packing: Part No. 08826−00080 or equivalent

NOTICE:

Install the oil pan No. 2 within 3 minutes after applying seal packing. After installing it, the oil pan No. 2 bolts and nuts must be tightened within 15 minutes. Otherwise the seal packing must be removed and reapplied.

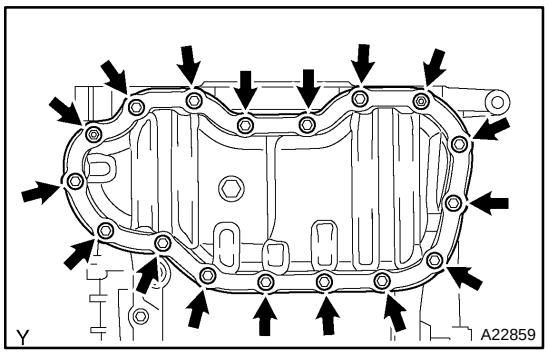

(c) Install the oil pan No. 2 with the 15 bolts and 2 nuts. Tighten the bolts and nuts uniformly in several steps.
Torque:
Bolt: 9.0 N·m (92 kgf·cm, 80 in.·lbf)
Nut: 10 N·m (102 kgf·cm, 7 ft·lbf)

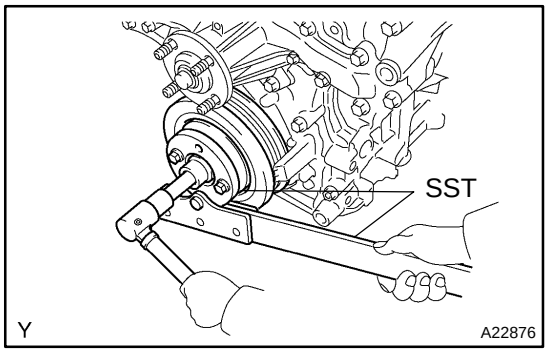

17. INSTALL CRANKSHAFT PULLEY
Using SST, install the pulley set bolt.
SST 09213−54015 (91651−60855), 09330−00021
Torque: 250 N·m (2,549 kgf·cm, 184 ft·lbf)

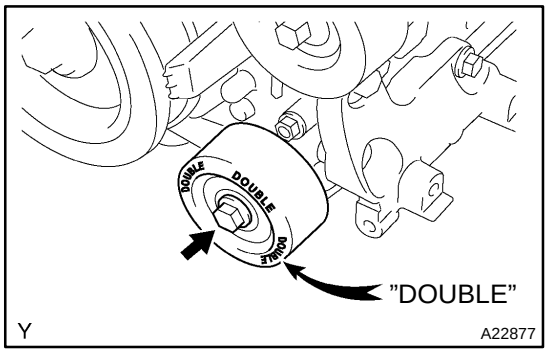

18. INSTALL IDLER PULLEY NO.1
Install the idler pulley with the bolt.
Torque: 54 N·m (551 kgf·cm, 40 ft·lbf)
HINT:
”DOUBLE” is marked on the idler pulley No. 1 to distinguish it from the idler pulley No. 2.

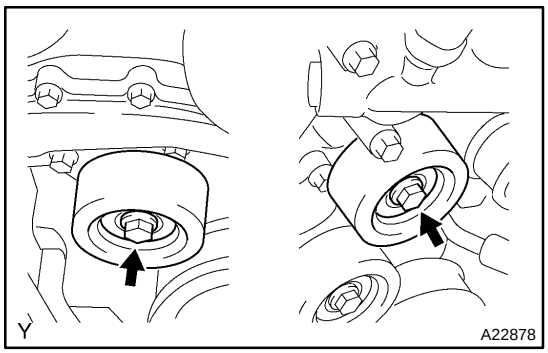

19. INSTALL IDLER PULLEY NO.2
Install the 2 idler pulleys with the 2 bolts.
Torque: 39 N·m (398 kgf·cm, 29 ft·lbf)

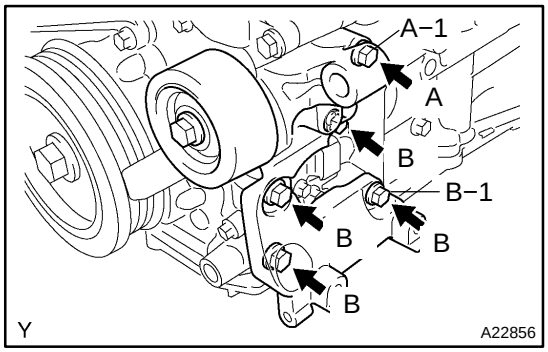

20. INSTALL V−RIBBED BELT TENSIONER ASSY
Tighten bolts A−1 and B−1 in order first, then tighten the remaining bolts.
Torque: 36 N·m (367 kgf·cm, 27 ft·lbf)
HINT:
Each bolt length is as follows:
A: 70 mm (2.76 in.)
B: 33 mm (1.30 in.)

21. INSTALL COOLER COMPRESSOR
(See page AC−58)

22. INSTALL GENERATOR (See page CH−15)

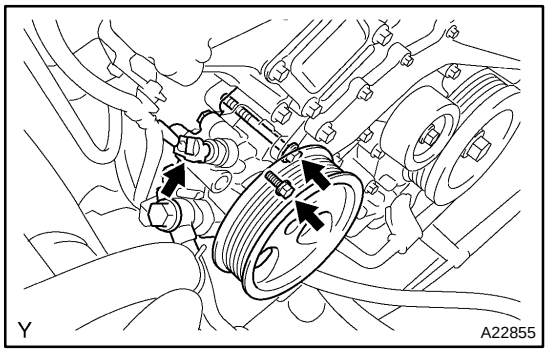

23. INSTALL VANE PUMP

(a) Install the vane pump with the 2 bolts.
Torque: 43 N·m (438 kgf·cm, 32 ft·lbf)

NOTICE:
Do not hit the pulley to other parts when installing the vane pump.

(b) Connect the P/S oil pressure switch connector.

24. INSTALL WATER INLET (See page EM−89)

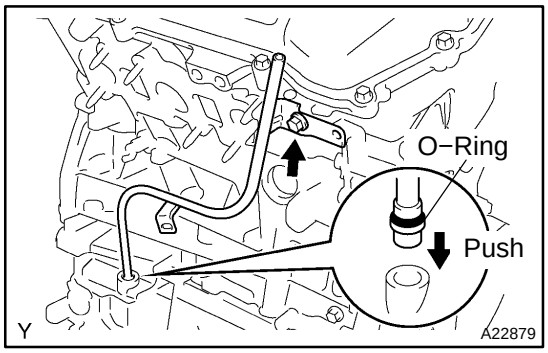

25. INSTALL OIL LEVEL GAUGE GUIDE

(a) Install a new O−ring to the oil level gauge guide.
(b) Apply a light coat of engine oil to the O−ring.
(c) Push in the oil level gauge guide end into the guide hole of the oil pan.
(d) Install the oil level gauge guide with the bolt.
Torque: 9.0 N·m (92 kgf·cm, 80 in.·lbf)
(e) Install the oil level gauge.

26. INSTALL CYLINDER HEAD COVER (See page EM−89)

27. INSTALL INTAKE AIR SURGE TANK (See page EM−89)

28. INSTALL AIR CLEANER (See page EM−89)

29. INSTALL FAN W/FLUID COUPLING (See page EM−89)

30. INSTALL DRIVE BELT (See page EM−89)

31. FULLY TIGHTEN FAN W/FLUID COUPLING

32. INSTALL RADIATOR (See page CO−18)

33. INSTALL V−BANK COVER

34. INSTALL BATTERY

35. ADD ENGINE OIL (See page LU−3)

36. ADD ENGINE COOLANT (See page CO−2)

37. CHECK FOR LEAKS

38. CHECK IGNITION TIMING (See page EM−23)

39. CHECK IDLE SPEED (See page EM−25)

EM1XK−01

REMOVAL

1. **DRAIN ENGINE COOLANT (See page CO−2)**
2. **DRAIN ENGINE OIL**
3. **REMOVE BATTERY**
4. **REMOVE V−BANK COVER**
5. **REMOVE RADIATOR (See page CO−17)**
6. **LOOSEN FAN W/FLUID COUPLING (See page EM−62)**
7. **REMOVE DRIVE BELT (See page EM−62)**
8. **REMOVE FAN W/FLUID COUPLING**
9. **REMOVE AIR CLEANER (See page EM−62)**
10. **REMOVE INTAKE AIR SURGE TANK (See page EM−62)**
11. **REMOVE CYLINDER HEAD COVER (See page EM−62)**
12. **REMOVE VVT SENSOR**
13. **REMOVE OIL LEVEL GAUGE GUIDE**

(a) Remove the oil level gauge.

(b) Remove the bolt and pull out the oil level gauge guide.

(c) Remove the O−ring from the oil level gauge guide.

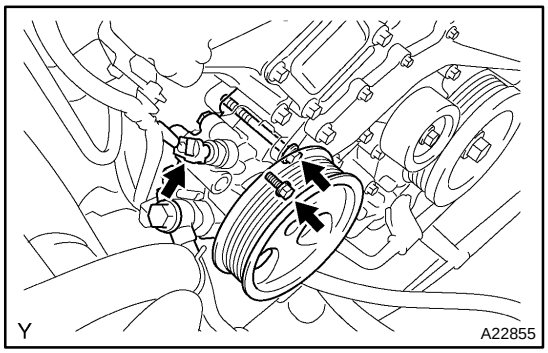

14. **SEPARATE VANE PUMP**

(a) Disconnect the P/S oil pressure switch connector.

(b) Remove the 2 bolts, and separate the vane pump.

NOTICE:

Do not hit the pulley to other parts when separating the vane pump.

HINT:

The vane pump is suspended securely.

15. **REMOVE GENERATOR (See page CH−7)**
16. **SEPARATE COOLER COMPRESSOR (See page AC−54)**

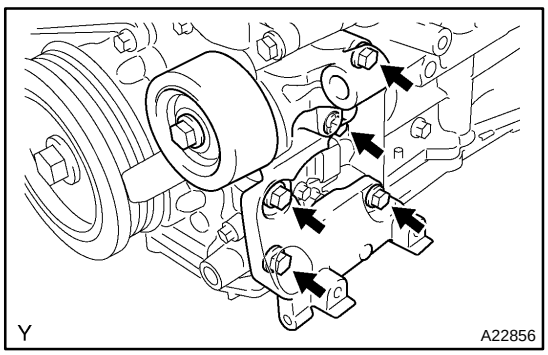

17. **REMOVE V−RIBBED BELT TENSIONER**

Remove the 5 bolts and V−ribbed belt tensioner.

18. **REMOVE IDLER PULLEY NO.1 AND NO.2**

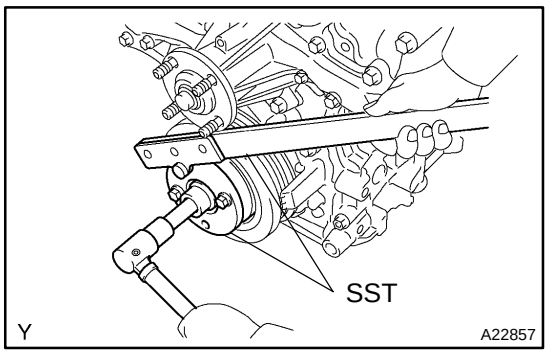

19. REMOVE CRANKSHAFT PULLEY

(a) Using SST, hold the crankshaft pulley and loosen the pulley set bolt.
SST 09213−54015 (91651−60855), 09330−00021

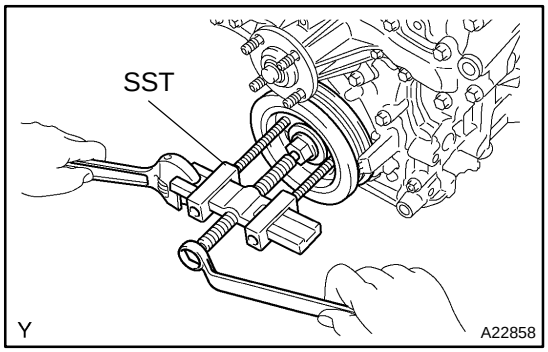

(b) Using the pulley set bolt and SST, remove the crankshaft pulley.
SST 09950−50013 (09951−05010, 09952−05010, 09953−05020, 09954−05031)

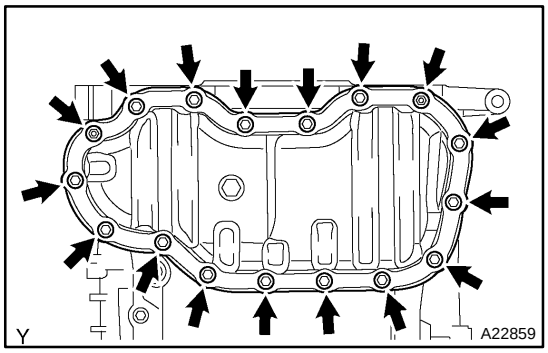

20. REMOVE OIL PAN NO.2

(a) Remove the 15 bolts and 2 nuts.

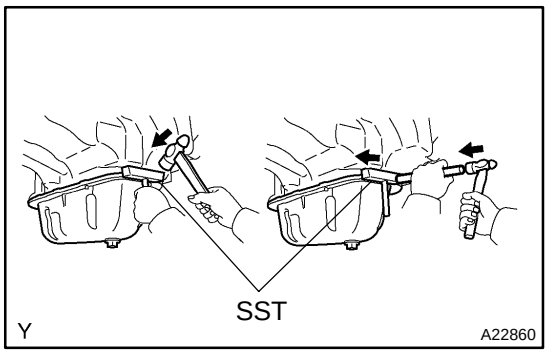

(b) Insert the blade of SST between the oil pan and oil pan No. 2, cut off applied sealer and remove the oil pan No. 2.
SST 09032−00100

NOTICE:

- **Be careful not to damage the contact surface of the oil pan and oil pan No. 2.**
- **Be careful not to damage the oil pan No. 2 flange.**

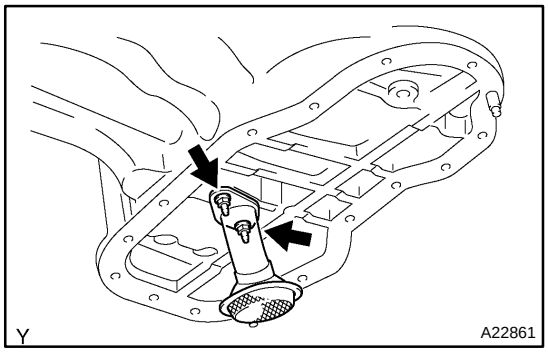

21. REMOVE OIL STRAINER

Remove the 2 nuts, oil strainer and gasket.

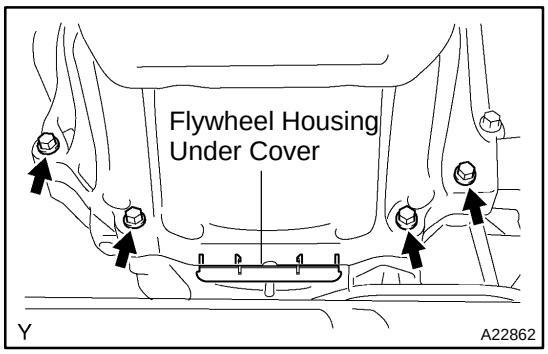

22. REMOVE OIL PAN

(a) Remove the 4 housing bolts.

(b) Remove the flywheel housing under cover.

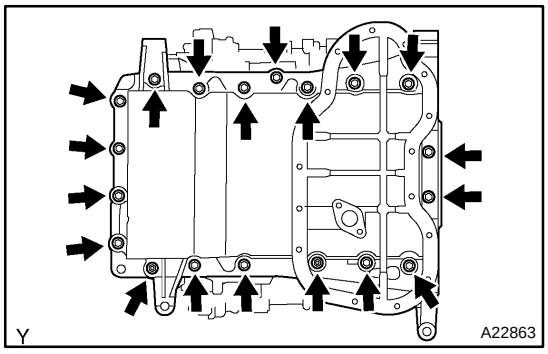

(c) Remove 17 bolts and 2 nuts.

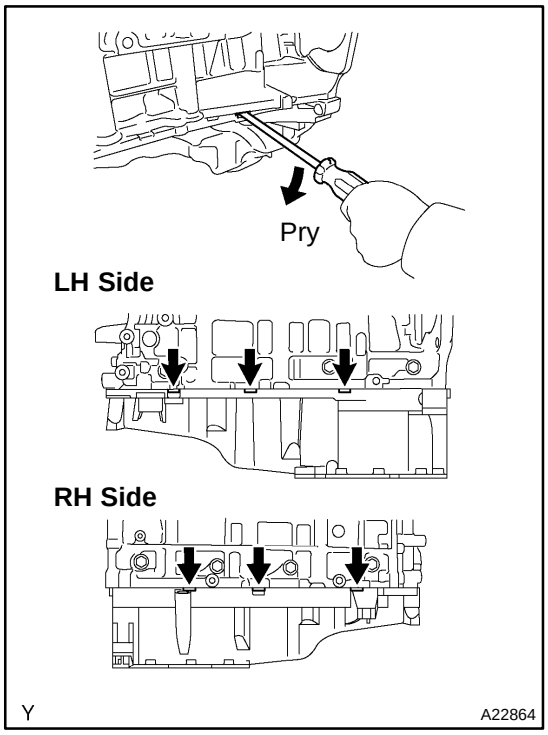

(d) Using a screwdriver, remove the oil pan by prying between the oil pan and cylinder block in the sequence shown.

NOTICE:

Be careful not to damage the contact surfaces of the cylinder block and oil pan.

(e) Remove the O−ring from the oil pump.

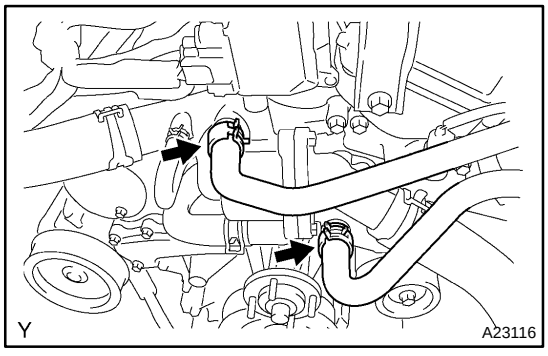

23. REMOVE WATER INLET

(a) Disconnect the 2 oil cooler hoses (w/ oil cooler).

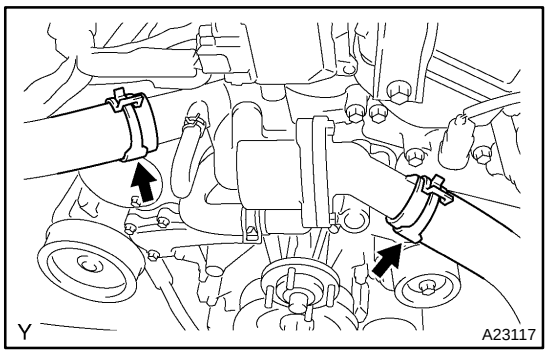

(b) Disconnect the 2 radiator hoses.

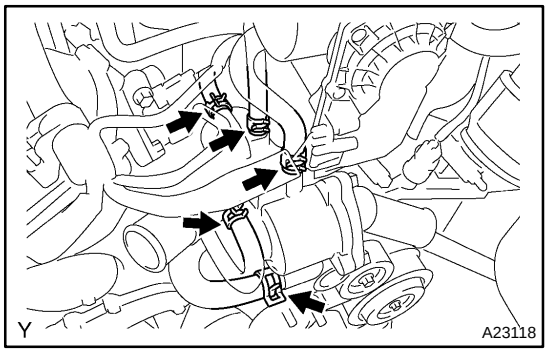

(c) Disconnect the 5 water by−pass hoses.

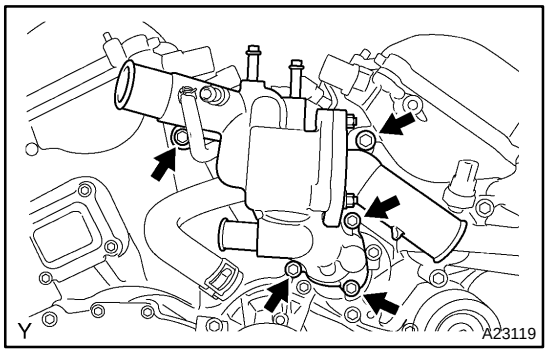

(d) Remove the 5 bolts and water inlet.
(e) Remove the O−ring from the water outlet pipe.
(f) Remove the gasket from the water pump.

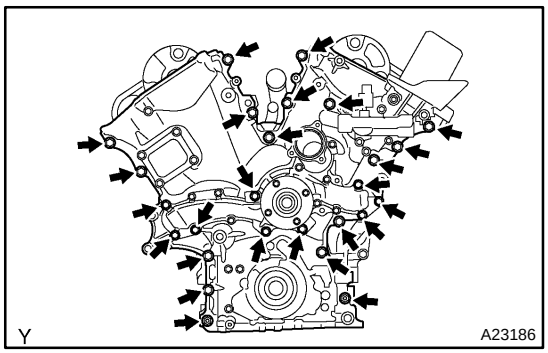

24. REMOVE TIMING CHAIN COVER

(a) Remove the 24 bolts and 2 nuts.

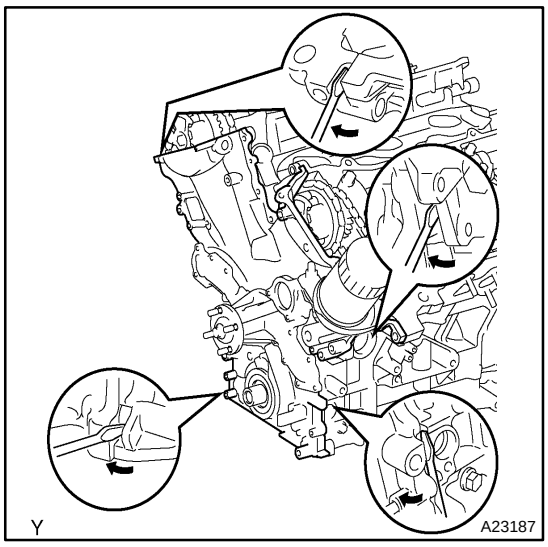

(b) Remove the timing chain cover by prying between the timing chain cover and cylinder head or cylinder block with a screwdriver.

NOTICE:

Be careful not to damage the contact surfaces of the timing chain cover, cylinder block and cylinder head.

(c) Remove the O−ring from the LH cylinder head.

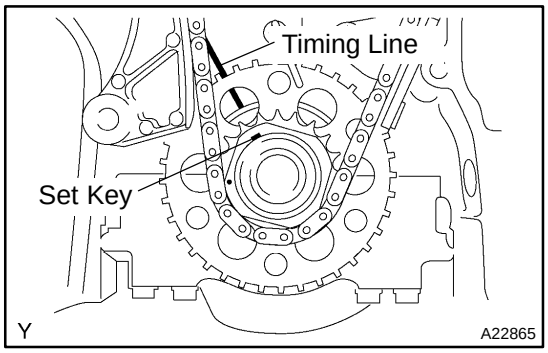

25. SET NO.1 CYLINDER TO TDC/COMPRESSION

(a) Install the crankshaft pulley set bolt, and turn the crankshaft to align the crankshaft set key with the timing line of the cylinder block.

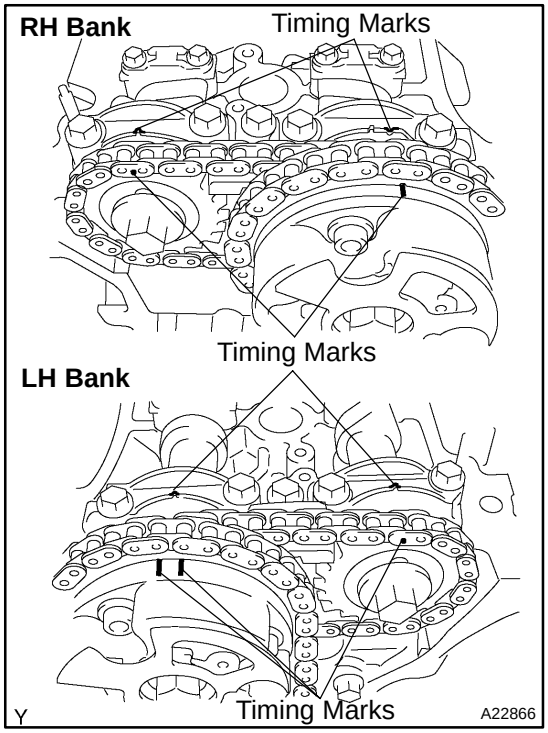

(b) Check that the timing marks of the camshaft timing gear assembly and camshaft timing sprocket are aligned with the timing marks of the bearing caps as shown in the illustration.

If not, turn the crankshaft 1 complete revolution (360 °) and align the timing marks as above.

26. REMOVE CHAIN TENSIONER NO.1

NOTICE:

- **Never rotate the crankshaft with the chain tensioner removed.**
- **When rotating the camshaft with the timing chain removed, rotate the crankshaft counterclockwise 40° from the TDC first.**

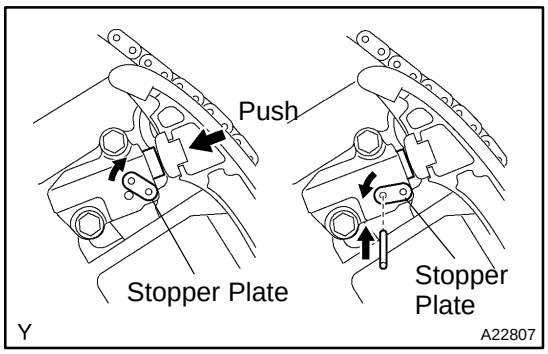

(a) While turning the stopper plate of the tensioner clockwise, push in the plunger of the chain tensioner as shown in the illustration.
(b) While turning the stopper plate of the tensioner counterclockwise, insert a bar of ϕ 3.5 mm (0.138 in.) into the holes in the stopper plate and tensioner to fix the stopper plate.
(c) Remove the 2 bolts and chain tensioner.

27. REMOVE CHAIN TENSIONER SLIPPER

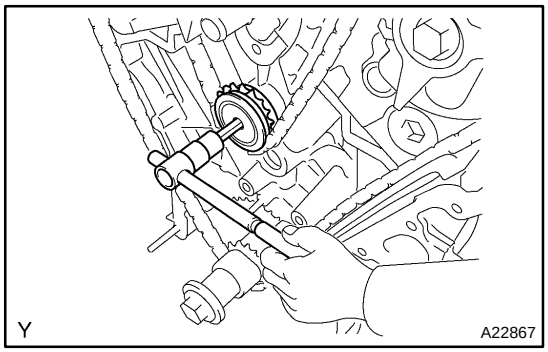

28. REMOVE IDLE GEAR NO.1

Using a 10 mm hexagon wrench, remove the idle gear shaft No. 2, idle gear No. 1 and idle gear shaft No. 1.

29. REMOVE CHAIN VIBRATION DAMPER NO.2

Remove the 2 chain vibration damper No.2.

30. REMOVE NO.1 TIMING CHAIN

31. REMOVE CRANKSHAFT TIMING SPROCKET

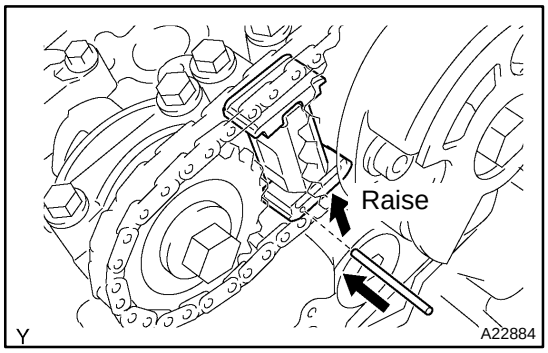

32. REMOVE NO.2 TIMING CHAIN

(a) While raising the chain tensioner No. 2, insert a pin of ϕ 1.0 mm (0.039 in.) into the hole to fix it.

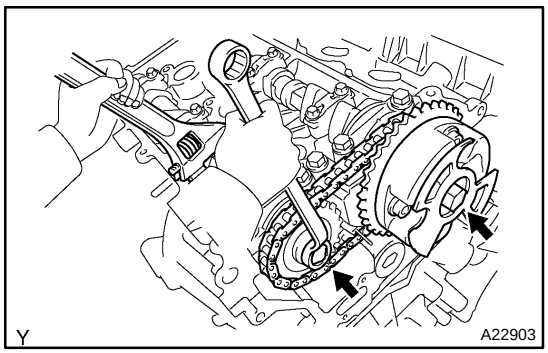

(b) Hold the hexagonal portion of the camshaft with a wrench, and remove the 2 bolts, camshaft timing sprocket, camshaft timing gear assembly and timing chain No.2.

NOTICE:

- **Be careful not to damage the cylinder head and valve lifter with the wrench.**
- **Do not disassemble the camshaft timing gear assembly.**

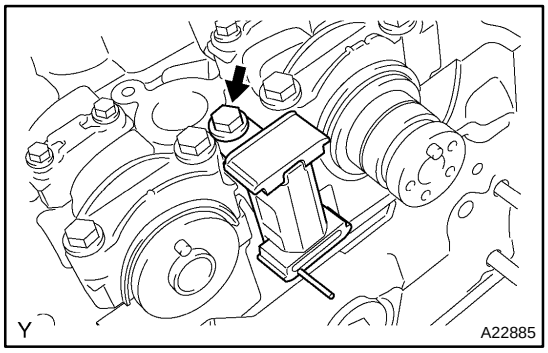

33. REMOVE CHAIN TENSIONER NO.2

Remove the bolt and chain tensioner No.2.

EM1XM−01

REPLACEMENT

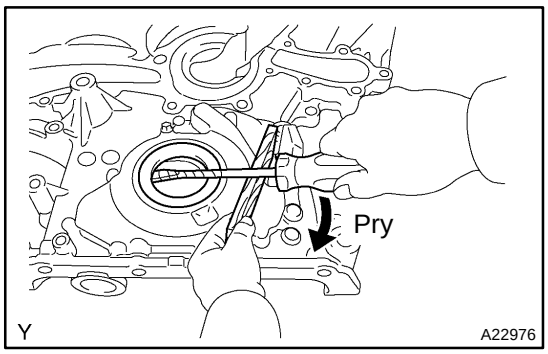

HINT:

There are 2 methods ((a) and (b)) to replace the oil seal.

REPLACE TIMING CHAIN COVER OIL SEAL

(a) If the rear timing chain cover is removed:

(1) Using a screwdriver, pry out the oil seal.

NOTICE:

Be careful not to damage the oil pump. Wrap the tip of the screwdriver with tape.

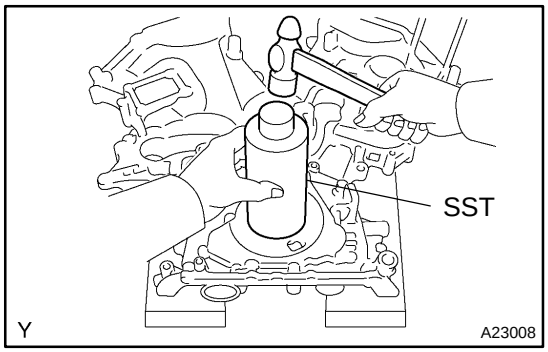

(2) Using SST and a hammer, tap in a new oil seal until its surface is flush with the timing chain cover edge.

SST 09226−10010

(3) Apply MP grease to the oil seal lip.

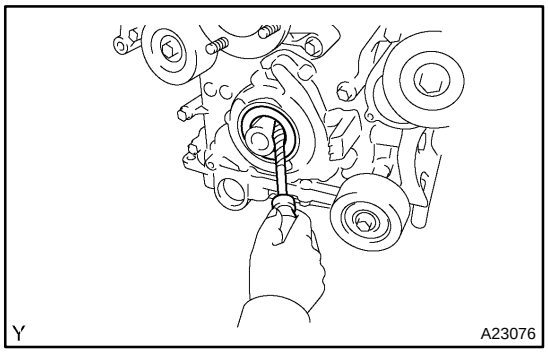

(b) If the rear timing chain cover is installed:

(1) Using a screwdriver, pry out the oil seal.

NOTICE:

Be careful not to damage the crankshaft. Wrap the tip of the screwdriver with tape.

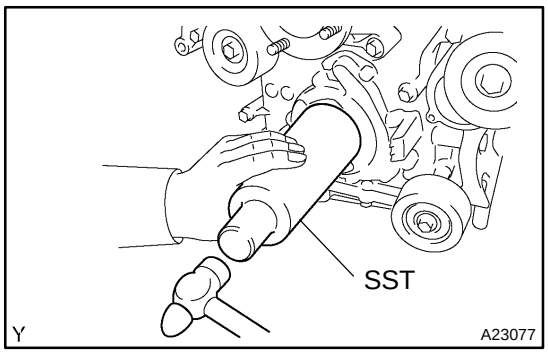

(2) Using SST and a hammer, tap in the oil seal until its surface is flush with the timing chain cover edge.

SST 09226−10010

(3) Apply MP grease to a new oil seal lip.

VALVE CLEARANCE

EM1XG−01

INSPECTION

1. **DRAIN ENGINE COOLANT (See page CO−2)**
2. **REMOVE V−BANK COVER**
3. **REMOVE AIR CLEANER (See page EM−62)**
4. **REMOVE INTAKE AIR SURGE TANK (See page EM−62)**
5. **REMOVE IGNITION COIL**
6. **REMOVE CYLINDER HEAD COVER (See page EM−62)**

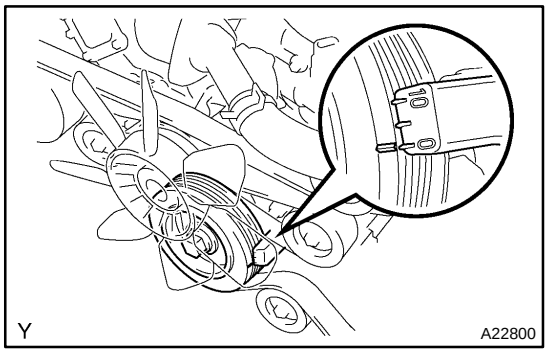

7. **SET NO. 1 CYLINDER TO TDC/COMPRESSION**

(a) Turn the crankshaft pulley, and align its groove with the timing mark ”0” of the timing chain cover.

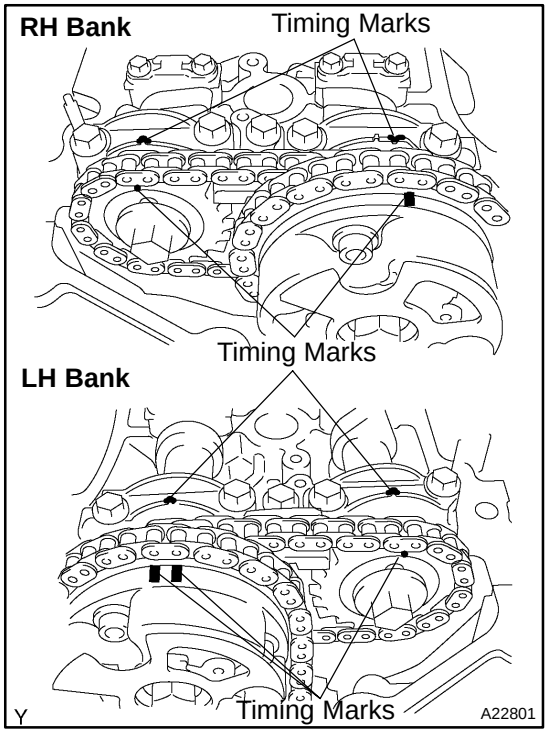

(b) Check that the timing marks of the camshaft timing gears are aligned with the timing marks of the bearing caps as shown in the illustration.

If not, turn the crankshaft 1 complete revolution (360 °) and align the timing marks as above.

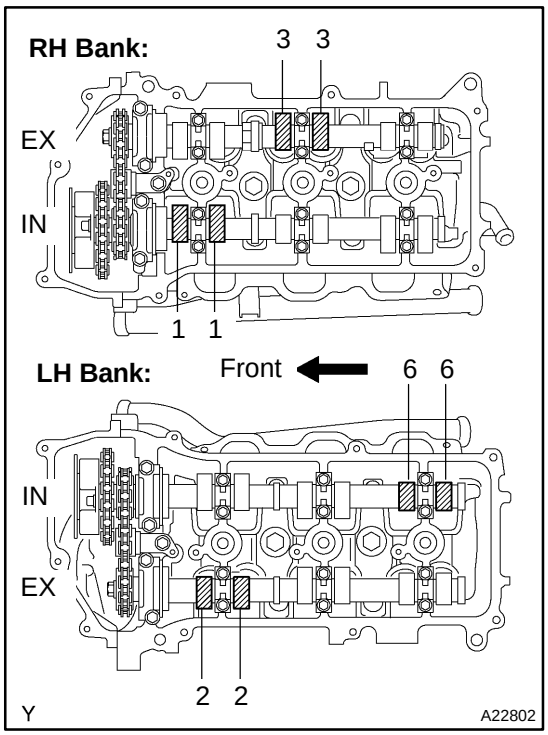

8. INSPECT VALVE CLEARANCE

(a) Check the valves indicated in the illustration.

(1) Using a feeler gauge, measure the clearance between the valve lifter and camshaft.

Valve clearance (Cold):
Intake: 0.15 to 0.25 mm (0.006 to 0.010 in.)
Exhaust: 0.29 to 0.39 mm (0.011 to 0.015 in.)

(2) Record the out−of−specification valve clearance measurements. They will be used later to determine the required replacement valve lifter.

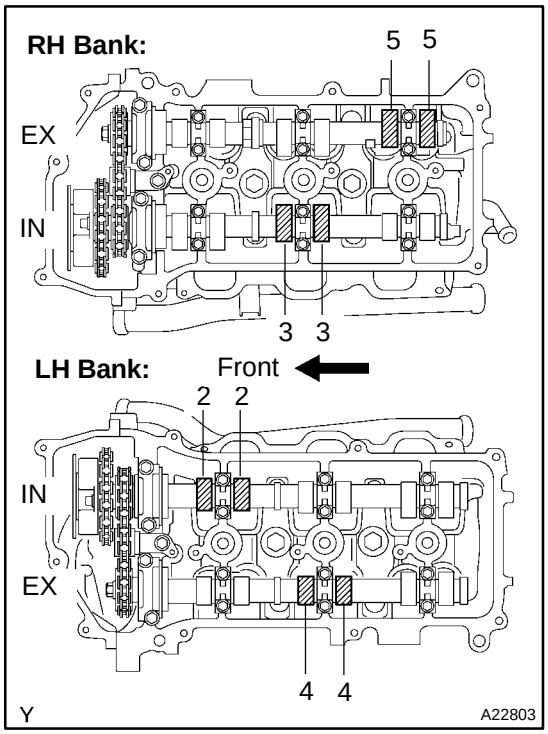

(b) Turn the crankshaft 2/3 of a revolution (240°), and check the valves indicated in the illustration.

(1) Using a feeler gauge, measure the clearance between the valve lifter and camshaft.

Valve clearance (Cold):
Intake: 0.15 to 0.25 mm (0.006 to 0.010 in.)
Exhaust: 0.29 to 0.39 mm (0.011 to 0.015 in.)

(2) Record the out−of−specification valve clearance measurements. They will be used later to determine the required replacement valve lifter.

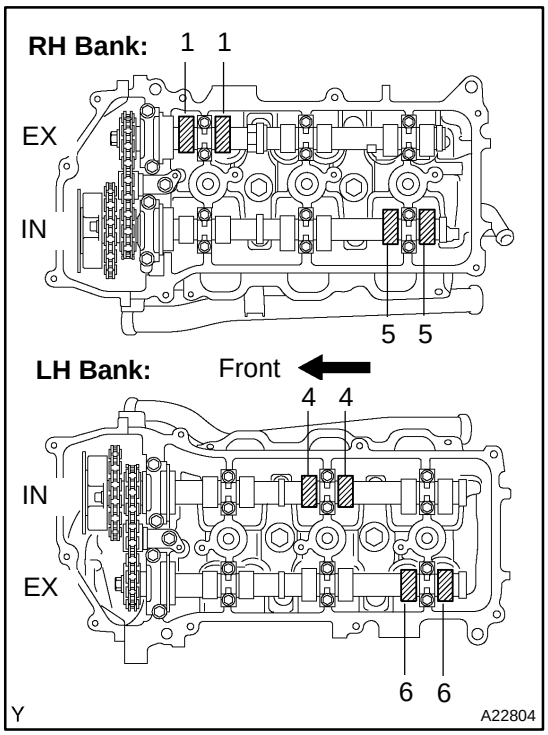

(c) Turn the crankshaft 2/3 of a revolution (240°), and check the valves indicated in the illustration.

(1) Using a feeler gauge, measure the clearance between the valve lifter and camshaft.

Valve clearance (Cold):
Intake: 0.15 to 0.25 mm (0.006 to 0.010 in.)
Exhaust: 0.29 to 0.39 mm (0.011 to 0.015 in.)

(2) Record the out−of−specification valve clearance measurements. They will be used later to determine the required replacement valve lifter.

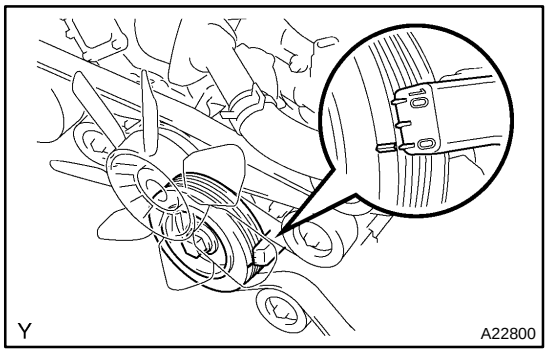

9. ADJUST VALVE CLEARANCE

(a) Set the No. 1 cylinder to the TDC/compression.

(1) Turn the crankshaft pulley, and align the notch with the timing mark ”0” of the timing chain cover.

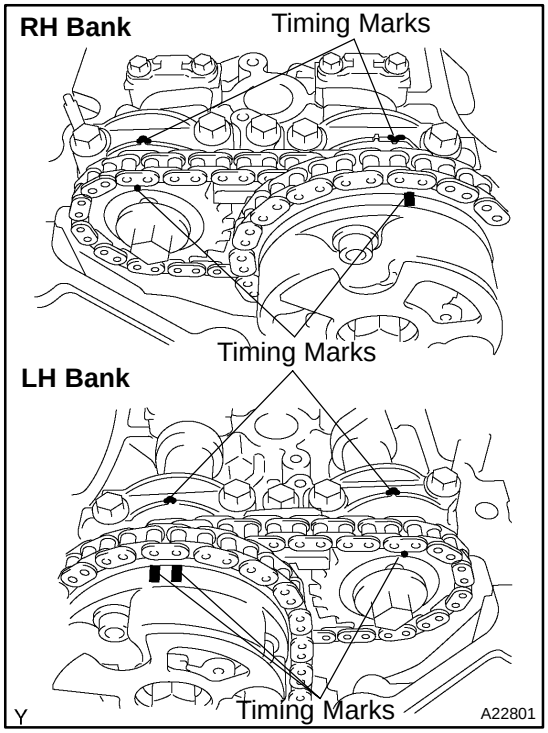

(2) Check that the timing marks of the camshaft timing gears are aligned with the timing marks of the bearing caps as shown in the illustration.

If not, turn the crankshaft 1 complete revolution (360 °) and align the timing marks as above.

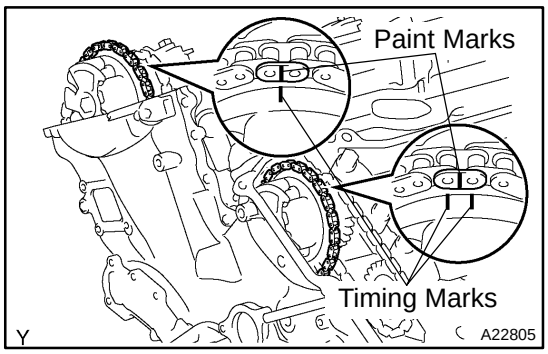

(3) Place paint marks on the No. 1 chain links that correspond with the timing marks of the camshaft timing gears.

(b) Remove the chain tensioner No. 1.

NOTICE:

- **Never rotate the crankshaft with the chain tensioner removed.**
- **When rotating the camshaft with the timing chain removed, turn the crankshaft counterclockwise 40 ° from the TDC first.**

(1) Remove the 4 bolts, timing chain cover plate and gasket.

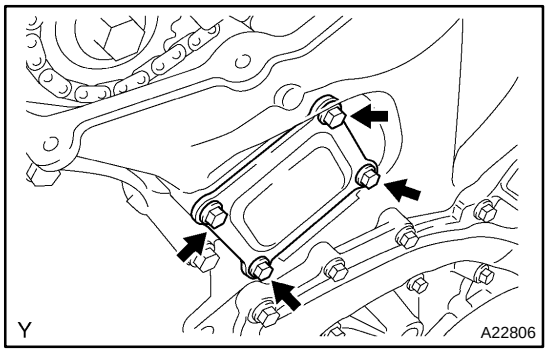

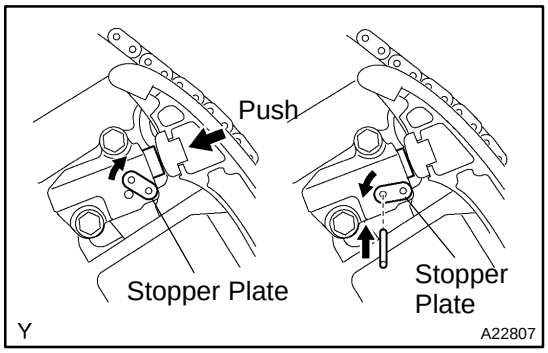

(2) While rotating the stopper plate of the tensioner upward, push in the plunger of the chain tensioner as shown in the illustration.

(3) While rotating the stopper plate of the tensioner downward, insert a bar of ϕ 3.5 mm (0.138 in.) into the holes in the stopper plate and tensioner to fix the stopper plate.

(4) Remove the 2 bolts and chain tensioner No.1.

(c) Remove the No. 2 camshaft.

NOTICE:

As the thrust clearance of the camshaft is small, the camshaft must be kept level while it is being removed. If the camshaft is not kept level, the portion of the cylinder head which receives the shaft thrust may crack or be damaged, causing the camshaft to seize or break. To avoid this, the following steps should be carried out.

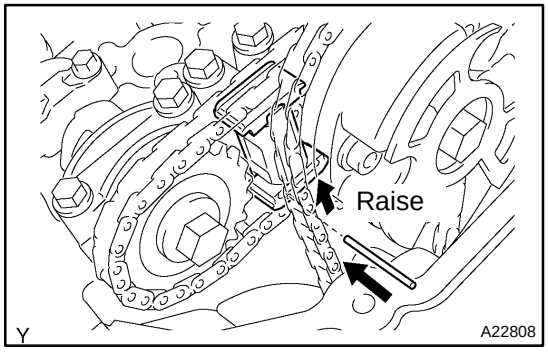

(1) While raising up the chain tensioner No. 2, insert a pin of ϕ 1.0 mm (0.039 in.) into the hole to fix it.

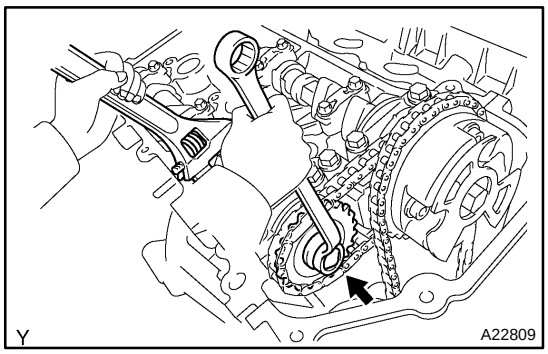

(2) Hold the hexagonal portion of the No. 2 camshaft with a wrench, and remove the camshaft timing sprocket set bolt.

NOTICE:

Be careful not to damage the cylinder head and valve lifter with the wrench.

(3) Separate the camshaft timing sprocket from the No. 2 camshaft.

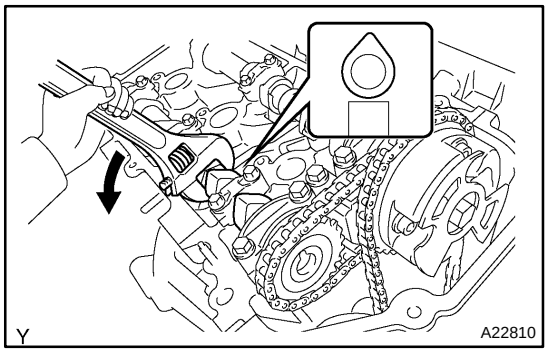

(4) Rotate the camshaft counterclockwise using the wrench so that the cam lobes of the No. 1 cylinder face upward as shown in the illustration.

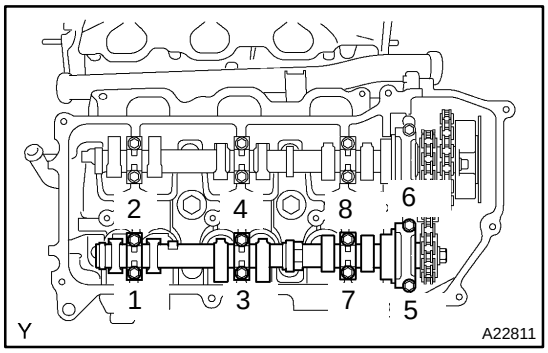

(5) Using several steps, loosen and remove the 8 bearing cap bolts uniformly in the sequence as shown in the illustration.

(6) Remove the 4 bearing caps and No. 2 camshaft.

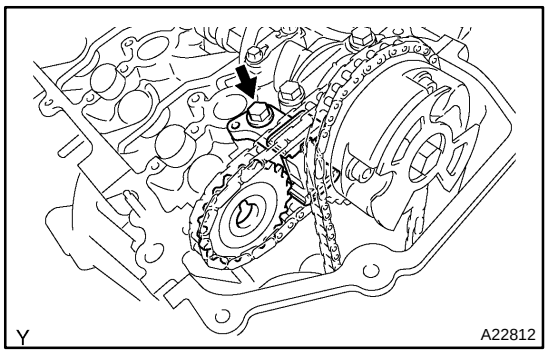

(d) Remove the chain tensioner No. 2.

(1) Remove the chain tensioner No. 2 bolt, and then remove the chain tensioner No. 2 and camshaft timing sprocket.

(e) Remove the camshaft.

NOTICE:

As the thrust clearance of the camshaft is small, the camshaft must be kept level while it is being removed. If the camshaft is not kept level, the portion of the cylinder head which receives the shaft thrust may crack or be damaged, causing the camshaft to seize or break. To avoid this, the following steps should be carried out.

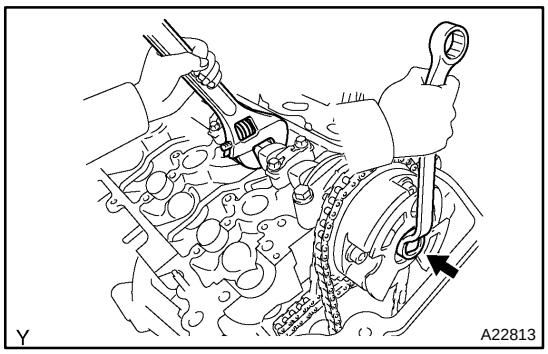

(1) Hold the hexagonal portion of the No. 1 camshaft with a wrench, and loosen the camshaft timing gear assembly set bolt.

NOTICE:

- **Be careful not to damage the cylinder head and valve lifter with the wrench.**
- **Do not disassemble the camshaft timing gear assembly.**

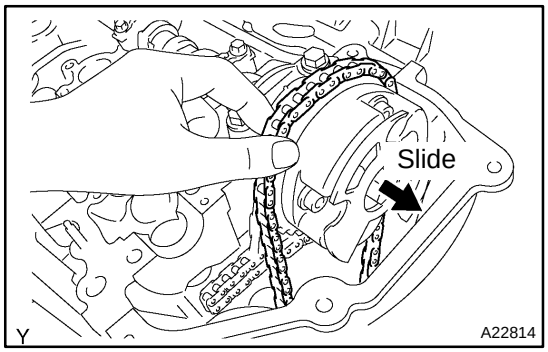

(2) Slide the camshaft timing gear assembly and separate the No. 1 chain from the camshaft timing gear sprocket.

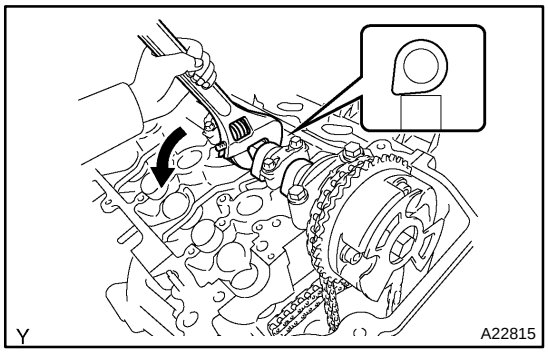

(3) Rotate the No. 1 camshaft counterclockwise using a wrench so that the cam lobes of No. 1 cylinder face upward as shown in the illustration.

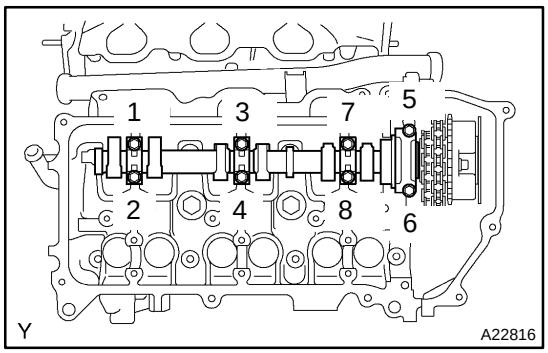

(4) Using several steps, loosen and remove the 8 bearing cap bolts uniformly in the sequence as shown in the illustration.

(5) Remove the 4 bearing caps.

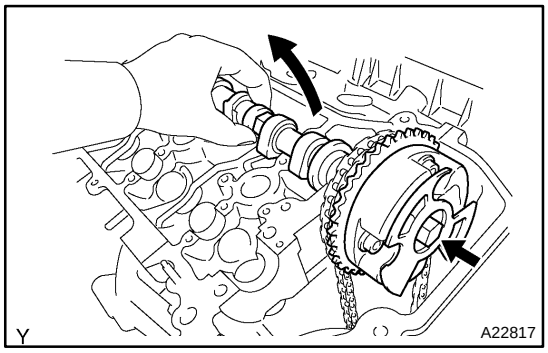

(6) Remove the camshaft timing gear assembly set bolt with the No. 1 camshaft lifted up, and then remove the No. 1 camshaft and camshaft timing gear assembly w/ No. 2 chain.

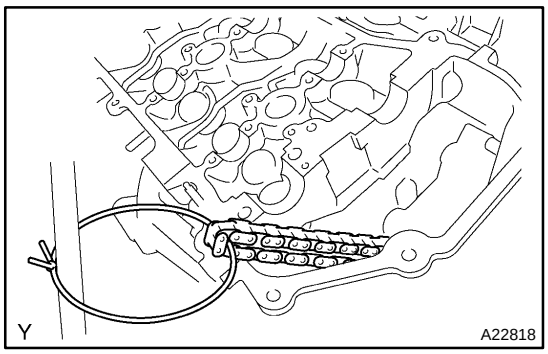

(7) Tie the No. 1 chain with a string as shown in the illustration.

NOTICE:

Be careful not to drop anything inside the timing chain cover.

(f) Remove the No. 4 camshaft.

NOTICE:

As the thrust clearance of the camshaft is small, the camshaft must be kept level while it is being removed. If the camshaft is not kept level, the portion of the cylinder head which receives the shaft thrust may crack or be damaged, causing the camshaft to seize or break. To avoid this, the following steps should be carried out.

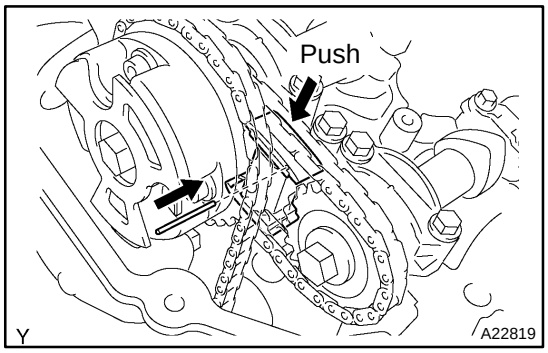

(1) While pushing down the chain tensioner No. 2, insert a pin of ϕ 1.0 mm (0.039 in.) into the hole to fix it.

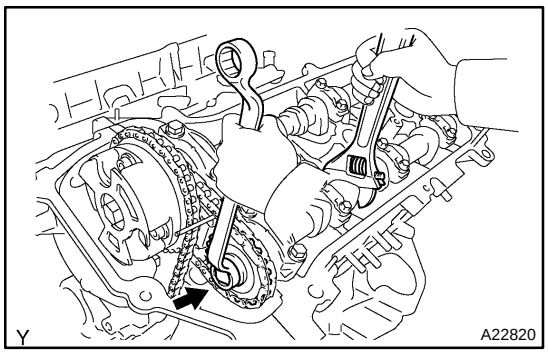

(2) Hold the hexagonal portion of the No. 4 camshaft with a wrench, and remove the camshaft timing sprocket set bolt.

NOTICE:

Be careful not to damage the cylinder head and valve lifter with the wrench.

(3) Separate the camshaft timing sprocket from the No. 4 camshaft.

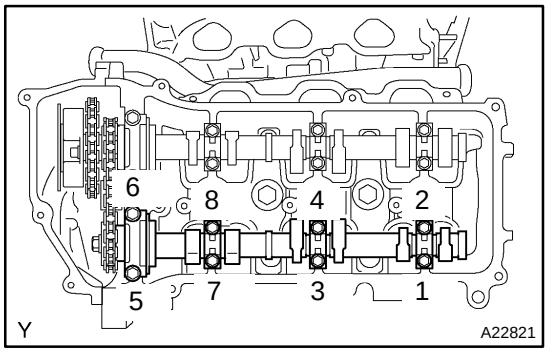

(4) Using several steps, loosen and remove the 8 bearing cap bolts uniformly in the sequence as shown in the illustration.

(5) Remove the 4 bearing caps and No. 4 camshaft.

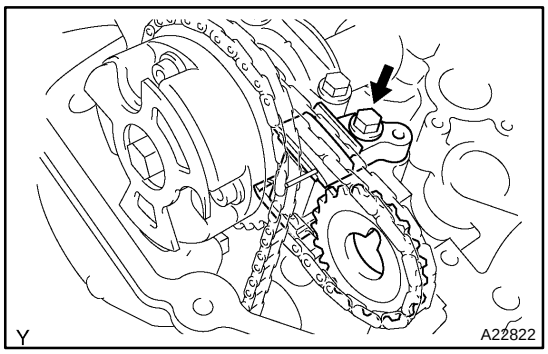

(g) Remove the chain tensioner No. 2.
  (1) Remove the chain tensioner No. 3 bolt, and then remove the chain tensioner No. 3 and camshaft timing sprocket.

(h) Remove the No. 3 camshaft.

NOTICE:

As the thrust clearance of the camshaft is small, the camshaft must be kept level while it is being removed. If the camshaft is not kept level, the portion of the cylinder head which receives the shaft thrust may crack or be damaged, causing the camshaft to seize or break. To avoid this, the following steps should be carried out.

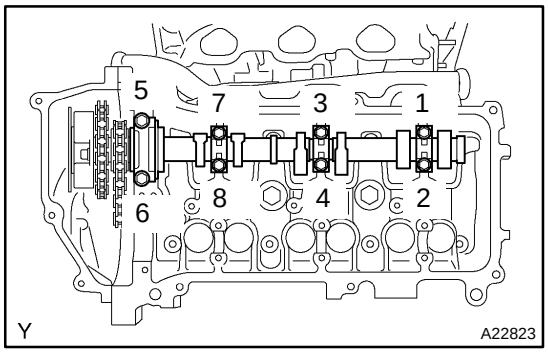

  (1) Using several steps, loosen and remove the 8 bearing cap bolts uniformly in the sequence as shown in the illustration.
  (2) Remove the 4 bearing caps.

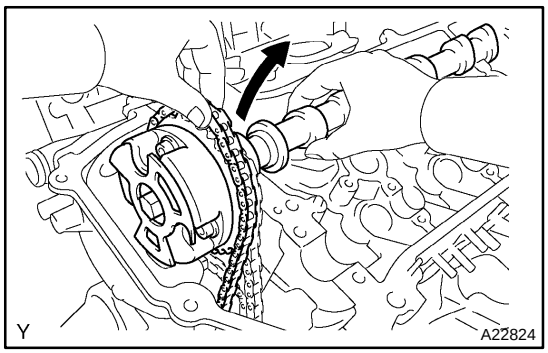

  (3) Hold the No. 1 chain, and remove the No. 3 camshaft, camshaft timing gear assembly and No. 2 chain.

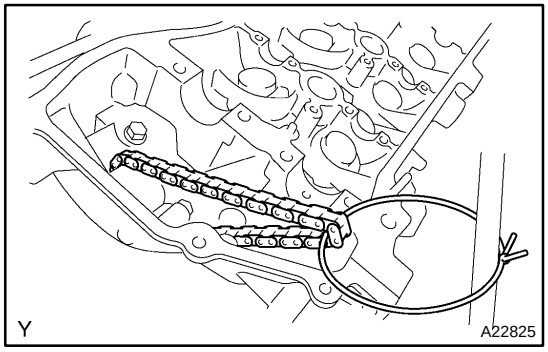

  (4) Tie the No. 1 chain with a string as shown in the illustration.

NOTICE:

Be careful not to drop anything inside the timing chain cover.

(i) Remove the valve lifters.

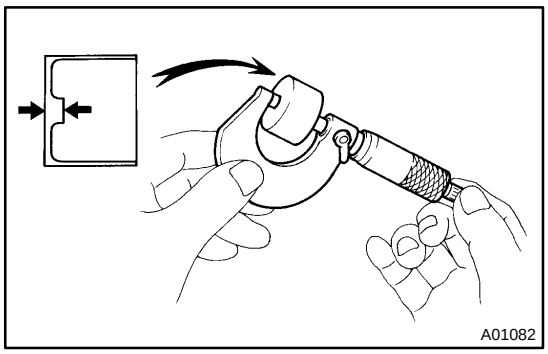

(j) Determine the size of the valve lifter to be installed according to the following formulas or charts:

(1) Using a micrometer, measure the thickness of the removed lifter.

(2) Calculate the thickness of a new lifter so that the valve clearance comes within the specified value.

T: Thickness of removed lifter

A: Measured valve clearance

N: Thickness of new lifter

Intake:

N = T + (A − 0.20 mm (0.008 in.))

Exhaust:

N = T + (A − 0.30 mm (0.012 in.))

(3) Select a new lifter with a thickness as close as possible to the calculated value.

HINT:

Lifters are available in 35 sizes in increments of 0.020 mm (0.0008 in.), from 5.060 mm (0.1992 in.) to 5.740 mm (0.2260 in.).

Valve Lifter Selection Chart (Intake)

Measured clearance mm (in.) \ Removed lifter thickness mm (in.)	5.060 (0.1992)	5.080 (0.2000)	5.100 (0.2008)	5.120 (0.2016)	5.140 (0.2024)	5.160 (0.2031)	5.180 (0.2039)	5.200 (0.2047)	5.210 (0.2051)	5.220 (0.2055)	5.230 (0.2059)	5.240 (0.2063)	5.250 (0.2067)	5.260 (0.2071)	5.270 (0.2075)	5.280 (0.2079)	5.290 (0.2083)	5.300 (0.2087)	5.310 (0.2091)	5.320 (0.2094)	5.330 (0.2098)	5.340 (0.2102)	5.350 (0.2106)	5.360 (0.2110)	5.370 (0.2114)	5.380 (0.2118)	5.390 (0.2122)	5.400 (0.2126)	5.410 (0.2130)	5.420 (0.2134)	5.430 (0.2138)	5.440 (0.2142)	5.450 (0.2146)	5.460 (0.2150)	5.470 (0.2154)	5.480 (0.2157)	5.490 (0.2161)	5.500 (0.2165)	5.510 (0.2169)	5.520 (0.2173)	5.530 (0.2177)	5.540 (0.2181)	5.550 (0.2185)	5.560 (0.2189)	5.570 (0.2193)	5.580 (0.2197)	5.590 (0.2201)	5.600 (0.2205)	5.620 (0.2213)	5.640 (0.2220)	5.660 (0.2228)	5.680 (0.2236)	5.700 (0.2244)	5.720 (0.2252)	5.740 (0.2260)
0.000 - 0.020 (0.0000 - 0.0008)													06	08	08	10	10	12	12	14	14	16	16	18	18	20	20	22	22	24	24	26	26	28	28	30	30	32	32	34	34	36	36	38	38	40	40	42	42	44	46	48	50	52	54	56
0.021 - 0.040 (0.0008 - 0.0016)											06	08	08	10	10	12	12	14	14	16	16	18	18	20	20	22	22	24	24	26	26	28	28	30	30	32	32	34	34	36	36	38	38	40	40	42	42	44	46	48	50	52	54	56	58
0.041 - 0.060 (0.0016 - 0.0024)									06	08	08	10	10	12	12	14	14	16	16	18	18	20	20	22	22	24	24	26	26	28	28	30	30	32	32	34	34	36	36	38	38	40	40	42	42	44	44	46	48	50	52	54	56	58	60
0.061 - 0.080 (0.0024 - 0.0031)								08	08	10	10	12	12	14	14	16	16	18	18	20	20	22	22	24	24	26	26	28	28	30	30	32	32	34	34	36	36	38	38	40	40	42	42	44	44	46	46	48	50	52	54	56	58	60	62
0.081 - 0.100 (0.0032 - 0.0039)							08	10	10	12	12	14	14	16	16	18	18	20	20	22	22	24	24	26	26	28	28	30	30	32	32	34	34	36	36	38	38	40	40	42	42	44	44	46	46	48	48	50	52	54	56	58	60	62	64
0.101 - 0.120 (0.0040 - 0.0047)						08	10	12	12	14	14	16	16	18	18	20	20	22	22	24	24	26	26	28	28	30	30	32	32	34	34	36	36	38	38	40	40	42	42	44	44	46	46	48	48	50	50	52	54	56	58	60	62	64	66
0.121 - 0.140 (0.0048 - 0.0055)					08	10	12	14	14	16	16	18	18	20	20	22	22	24	24	26	26	28	28	30	30	32	32	34	34	36	36	38	38	40	40	42	42	44	44	46	46	48	48	50	50	52	52	54	56	58	60	62	64	66	68
0.141 - 0.160 (0.0056 - 0.0059)				06	08	10	12	14	16	16	18	18	20	20	22	22	24	24	26	26	28	28	30	30	32	32	34	34	36	36	38	38	40	40	42	42	44	44	46	46	48	48	50	50	52	52	54	54	56	58	60	62	64	66	68
0.251 - 0.270 (0.0099 - 0.0106)	12	14	16	18	20	22	24	26	28	28	30	30	32	32	34	34	36	36	38	38	40	40	42	42	44	44	46	46	48	48	50	50	52	52	54	54	56	56	58	58	60	60	62	62	64	64	66	66	68	70	72				
0.271 - 0.290 (0.0107 - 0.0114)	14	16	18	20	22	24	26	28	30	30	32	32	34	34	36	36	38	38	40	40	42	42	44	44	46	46	48	48	50	50	52	52	54	54	56	56	58	58	60	60	62	62	64	64	66	66	68	68	70	72				
0.291 - 0.310 (0.0115 - 0.0122)	16	18	20	22	24	26	28	30	32	32	34	34	36	36	38	38	40	40	42	42	44	44	46	46	48	48	50	50	52	52	54	54	56	56	58	58	60	60	62	62	64	64	66	66	68	68	70	70	72					
0.311 - 0.330 (0.0122 - 0.0130)	18	20	22	24	26	28	30	32	34	34	36	36	38	38	40	40	42	42	44	44	46	46	48	48	50	50	52	52	54	54	56	56	58	58	60	60	62	62	64	64	66	66	68	68	70	70	72	72						
0.331 - 0.350 (0.0130 - 0.0138)	20	22	24	26	28	30	32	34	36	36	38	38	40	40	42	42	44	44	46	46	48	48	50	50	52	52	54	54	56	56	58	58	60	60	62	62	64	64	66	66	68	68	70	70	72	72	74							
0.351 - 0.370 (0.0138 - 0.0146)	22	24	26	28	30	32	34	36	38	38	40	40	42	42	44	44	46	46	48	48	50	50	52	52	54	54	56	56	58	58	60	60	62	62	64	64	66	66	68	68	70	70	72	72	74									
0.371 - 0.390 (0.0146 - 0.0154)	24	26	28	30	32	34	36	38	40	40	42	42	44	44	46	46	48	48	50	50	52	52	54	54	56	56	58	58	60	60	62	62	64	64	66	66	68	68	70	70	72	72	74											
0.391 - 0.410 (0.0154 - 0.0161)	26	28	30	32	34	36	38	40	42	42	44	44	46	46	48	48	50	50	52	52	54	54	56	56	58	58	60	60	62	62	64	64	66	66	68	68	70	70	72	72	74													
0.411 - 0.430 (0.0162 - 0.0169)	28	30	32	34	36	38	40	42	44	44	46	46	48	48	50	50	52	52	54	54	56	56	58	58	60	60	62	62	64	64	66	66	68	68	70	70	72	72	74															
0.431 - 0.450 (0.0170 - 0.0177)	30	32	34	36	38	40	42	44	46	46	48	48	50	50	52	52	54	54	56	56	58	58	60	60	62	62	64	64	66	66	68	68	70	70	72	72	74																	
0.451 - 0.470 (0.0178 - 0.0185)	32	34	36	38	40	42	44	46	46	48	50	50	52	52	54	54	56	56	58	58	60	60	62	62	64	64	66	66	68	68	70	70	72	72	74																		
0.471 - 0.490 (0.0185 - 0.0193)	34	36	38	40	42	44	46	48	50	50	52	52	54	54	56	56	58	58	60	60	62	62	64	64	66	66	68	68	70	70	72	72	74																			
0.491 - 0.510 (0.0193 - 0.0201)	36	38	40	42	44	46	48	50	52	52	54	54	56	56	58	58	60	60	62	62	64	64	66	66	68	68	70	70	72	72	74																				
0.511 - 0.530 (0.0201 - 0.0209)	38	40	42	44	46	48	50	52	54	54	56	56	58	58	60	60	62	62	64	64	66	66	68	68	70	70	72	72	74																					
0.531 - 0.550 (0.0209 - 0.0217)	40	42	44	46	48	50	52	54	56	56	58	58	60	60	62	62	64	64	66	66	68	68	70	70	72	72	74																						
0.551 - 0.570 (0.0217 - 0.0224)	42	44	46	48	50	52	54	56	58	58	60	60	62	62	64	64	66	66	68	68	70	70	72	72	74																						
0.571 - 0.590 (0.0225 - 0.0232)	44	46	48	50	52	54	56	58	60	60	62	62	64	64	66	66	68	68	70	70	72	72	74																							
0.591 - 0.610 (0.0233 - 0.0240)	46	48	50	52	54	56	58	60	62	62	64	64	66	66	68	68	70	70	72	72	74																							
0.611 - 0.630 (0.0241 - 0.0248)	48	50	52	54	56	58	60	62	64	64	66	66	68	68	70	70	72	72	74																							
0.631 - 0.650 (0.0248 - 0.0256)	50	52	54	56	58	60	62	64	66	66	68	68	70	70	72	72	74																							
0.651 - 0.670 (0.0256 - 0.0264)	52	54	56	58	60	62	64	66	68	68	70	70	72	72	74																							
0.671 - 0.690 (0.0264 - 0.0272)	54	56	58	60	62	64	66	68	70	70	72	72	74																							
0.691 - 0.710 (0.0272 - 0.0280)	56	58	60	62	64	66	68	70	72	72	74																									
0.711 - 0.730 (0.0280 - 0.0287)	58	60	62	64	66	68	70	72	74																											
0.731 - 0.750 (0.0288 - 0.0295)	60	62	64	66	68	70	72																													
0.751 - 0.770 (0.0296 - 0.0303)	62	64	66	68	70	72																														
0.771 - 0.790 (0.0304 - 0.0311)	64	66	68	70	72																															
0.791 - 0.810 (0.0311 - 0.0319)	66	68	70	72																																
0.811 - 0.830 (0.0319 - 0.0327)	68	70	72																																	
0.831 - 0.850 (0.0327 - 0.0335)	70	72																																		
0.851 - 0.870 (0.0335 - 0.0343)	72																																			

Intake valve clearance (Cold):
0.15 to 0.25 mm (0.0059 to 0.0098 in.)

EXAMPLE:
The 5.250 mm (0.2067 in.) lifter is installed, and the measured clearance is 0.400 mm (0.0158 in.). Replace the 5.250 mm (0.2067 in.) shim with a new No. 46 lifter.

New Lifter Thickness mm (in.)

No.	Thickness	No.	Thickness	No.	Thickness
06	5.060(0.1992)	30	5.300(0.2087)	54	5.540(0.2181)
08	5.080(0.2000)	32	5.320(0.2094)	56	5.560(0.2189)
10	5.100(0.2008)	34	5.340(0.2102)	58	5.580(0.2197)
12	5.120(0.2016)	36	5.360(0.2110)	60	5.600(0.2205)
14	5.140(0.2024)	38	5.380(0.2118)	62	5.620(0.2213)
16	5.160(0.2031)	40	5.400(0.2126)	64	5.640(0.2220)
18	5.180(0.2039)	42	5.420(0.2134)	66	5.660(0.2228)
20	5.200(0.2047)	44	5.440(0.2142)	68	5.680(0.2236)
22	5.220(0.2055)	46	5.460(0.2150)	70	5.700(0.2244)
24	5.240(0.2063)	48	5.480(0.2157)	72	5.720(0.2252)
26	5.260(0.2071)	50	5.500(0.2165)	74	5.740(0.2260)
28	5.280(0.2079)	52	5.520(0.2173)		

A22826

Valve Lifter Selection Chart (Exhaust)

Measured clearance mm (in.) \ Removed lifter thickness mm (in.)	5.060 (0.1992)	5.080 (0.2000)	5.100 (0.2008)	5.120 (0.2016)	5.140 (0.2024)	5.160 (0.2031)	5.180 (0.2039)	5.200 (0.2047)	5.210 (0.2051)	5.220 (0.2055)	5.230 (0.2059)	5.240 (0.2063)	5.250 (0.2067)	5.260 (0.2071)	5.270 (0.2075)	5.280 (0.2079)	5.290 (0.2083)	5.300 (0.2087)	5.310 (0.2091)	5.320 (0.2094)	5.330 (0.2098)	5.340 (0.2102)	5.350 (0.2106)	5.360 (0.2110)	5.370 (0.2114)	5.380 (0.2118)	5.390 (0.2122)	5.400 (0.2126)	5.410 (0.2130)	5.420 (0.2134)	5.430 (0.2138)	5.440 (0.2142)	5.450 (0.2146)	5.460 (0.2150)	5.470 (0.2154)	5.480 (0.2157)	5.490 (0.2161)	5.500 (0.2165)	5.510 (0.2169)	5.520 (0.2173)	5.530 (0.2177)	5.540 (0.2181)	5.550 (0.2185)	5.560 (0.2189)	5.570 (0.2193)	5.580 (0.2197)	5.590 (0.2201)	5.600 (0.2205)	5.620 (0.2213)	5.640 (0.2220)	5.660 (0.2228)	5.680 (0.2236)	5.700 (0.2244)	5.720 (0.2252)	5.740 (0.2260)
0.000 - 0.020 (0.0000 - 0.0008)																										06	08	08	10	10	12	12	14	14	16	16	18	18	20	20	22	22	24	24	26	26	28	30	32	34	36	38	40	42
0.021 - 0.040 (0.0008 - 0.0016)																									06	08	08	10	10	12	12	14	14	16	16	18	18	20	20	22	22	24	24	26	26	28	30	32	34	36	38	40	42	44
0.041 - 0.060 (0.0016 - 0.0024)																								06	08	08	10	10	12	12	14	14	16	16	18	18	20	20	22	22	24	24	26	26	28	28	30	30	32	34	36	38	40	42	44	46
0.061 - 0.080 (0.0024 - 0.0031)																					06	08	08	10	10	12	12	14	14	16	16	18	18	20	20	22	22	24	24	26	26	28	28	30	30	32	32	34	36	38	40	42	44	46	48
0.081 - 0.100 (0.0032 - 0.0039)																			06	08	08	10	10	12	12	14	14	16	16	18	18	20	20	22	22	24	24	26	26	28	28	30	30	32	32	34	34	36	38	40	42	44	46	48	50
0.101 - 0.120 (0.0040 - 0.0047)																06	08	08	10	10	12	12	14	14	16	16	18	18	20	20	22	22	24	24	26	26	28	28	30	30	32	32	34	34	36	36	38	40	42	44	46	48	50	52
0.121 - 0.140 (0.0048 - 0.0055)														06	08	08	10	10	12	12	14	14	16	16	18	18	20	20	22	22	24	24	26	26	28	28	30	30	32	32	34	34	36	36	38	38	40	42	44	46	48	50	52	54
0.141 - 0.160 (0.0056 - 0.0063)													06	08	08	10	10	12	12	14	14	16	16	18	18	20	20	22	22	24	24	26	26	28	28	30	30	32	32	34	34	36	36	38	38	40	40	42	44	46	48	50	52	54	56
0.161 - 0.180 (0.0063 - 0.0071)											06	08	08	10	10	12	12	14	14	16	16	18	18	20	20	22	22	24	24	26	26	28	28	30	30	32	32	34	34	36	36	38	38	40	40	42	42	44	46	48	50	52	54	56	58
0.181 - 0.200 (0.0071 - 0.0079)									06	08	08	10	10	12	12	14	14	16	16	18	18	20	20	22	22	24	24	26	26	28	28	30	30	32	32	34	34	36	36	38	38	40	40	42	42	44	44	46	48	50	52	54	56	58	60
0.201 - 0.220 (0.0079 - 0.0087)								08	08	10	10	12	12	14	14	16	16	18	18	20	20	22	22	24	24	26	26	28	28	30	30	32	32	34	34	36	36	38	38	40	40	42	42	44	44	46	46	48	50	52	54	56	58	60	62
0.221 - 0.240 (0.0087 - 0.0094)							08	10	10	12	12	14	14	16	16	18	18	20	20	22	22	24	24	26	26	28	28	30	30	32	32	34	34	36	36	38	38	40	40	42	42	44	44	46	46	48	48	50	52	54	56	58	60	62	64
0.241 - 0.260 (0.0095 - 0.0102)						08	10	12	12	14	14	16	16	18	18	20	20	22	22	24	24	26	26	28	28	30	30	32	32	34	34	36	36	38	38	40	40	42	42	44	44	46	46	48	48	50	50	52	54	56	58	60	62	64	66
0.261 - 0.280 (0.0103 - 0.0110)				08	10	12	14	14	16	16	18	18	20	20	22	22	24	24	26	26	28	28	30	30	32	32	34	34	36	36	38	38	40	40	42	42	44	44	46	46	48	48	50	50	52	52	54	56	58	60	62	64	66	68
0.281 - 0.289 (0.0111 - 0.0114)				06	08	10	12	14	16	16	18	18	20	20	22	22	24	24	26	26	28	28	30	30	32	32	34	34	36	36	38	38	40	40	42	42	44	44	46	46	48	48	50	50	52	52	54	54	56	58	60	62	64	66	68
0.391 - 0.410 (0.0154 - 0.0161)	12	14	16	18	20	22	24	26	28	28	30	30	32	32	34	34	36	36	38	38	40	40	42	42	44	44	46	46	48	48	50	50	52	52	54	54	56	56	58	58	60	60	62	62	64	64	66	66	68	70	72			
0.411 - 0.430 (0.0162 - 0.0169)	14	16	18	20	22	24	26	28	30	30	32	32	34	34	36	36	38	38	40	40	42	42	44	44	46	46	48	48	50	50	52	52	54	54	56	56	58	58	60	60	62	62	64	64	66	66	68	68	70	72				
0.431 - 0.450 (0.0170 - 0.0177)	16	18	20	22	24	26	28	30	32	32	34	34	36	36	38	38	40	40	42	42	44	44	46	46	48	48	50	50	52	52	54	54	56	56	58	58	60	60	62	62	64	64	66	66	68	68	70	70	72					
0.451 - 0.470 (0.0178 - 0.0185)	18	20	22	24	26	28	30	32	34	34	36	36	38	38	40	40	42	42	44	44	46	46	48	48	50	50	52	52	54	54	56	56	58	58	60	60	62	62	64	64	66	66	68	68	70	70	72	72						
0.471 - 0.490 (0.0185 - 0.0193)	20	22	24	26	28	30	32	34	36	36	38	38	40	40	42	42	44	44	46	46	48	48	50	50	52	52	54	54	56	56	58	58	60	60	62	62	64	64	66	66	68	68	70	70	72	72	74							
0.491 - 0.510 (0.0193 - 0.0201)	22	24	26	28	30	32	34	36	38	38	40	40	42	42	44	44	46	46	48	48	50	50	52	52	54	54	56	56	58	58	60	60	62	62	64	64	66	66	68	68	70	70	72	72	74									
0.511 - 0.530 (0.0201 - 0.0209)	24	26	28	30	32	34	36	38	40	40	42	42	44	44	46	46	48	48	50	50	52	52	54	54	56	56	58	58	60	60	62	62	64	64	66	66	68	68	70	70	72	72	74											
0.531 - 0.550 (0.0209 - 0.0217)	26	28	30	32	34	36	38	40	42	42	44	44	46	46	48	48	50	50	52	52	54	54	56	56	58	58	60	60	62	62	64	64	66	66	68	68	70	70	72	72	74													
0.551 - 0.570 (0.0217 - 0.0224)	28	30	32	34	36	38	40	42	44	44	46	46	48	48	50	50	52	52	54	54	56	56	58	58	60	60	62	62	64	64	66	66	68	68	70	70	72	72	74															
0.571 - 0.590 (0.0225 - 0.0232)	30	32	34	36	38	40	42	44	46	46	48	48	50	50	52	52	54	54	56	56	58	58	60	60	62	62	64	64	66	66	68	68	70	70	72	72	74																	
0.591 - 0.610 (0.0233 - 0.0240)	32	34	36	38	40	42	44	46	48	48	50	50	52	52	54	54	56	56	58	58	60	60	62	62	64	64	66	66	68	68	70	70	72	72	74																			
0.611 - 0.630 (0.0241 - 0.0248)	34	36	38	40	42	44	46	48	50	50	52	52	54	54	56	56	58	58	60	60	62	62	64	64	66	66	68	68	70	70	72	72	74																				
0.631 - 0.650 (0.0248 - 0.0256)	36	38	40	42	44	46	48	50	52	52	54	54	56	56	58	58	60	60	62	62	64	64	66	66	68	68	70	70	72	72	74																					
0.651 - 0.670 (0.0256 - 0.0264)	38	40	42	44	46	48	50	52	54	54	56	56	58	58	60	60	62	62	64	64	66	66	68	68	70	70	72	72	74																						
0.671 - 0.690 (0.0264 - 0.0272)	40	42	44	46	48	50	52	54	56	56	58	58	60	60	62	62	64	64	66	66	68	68	70	70	72	72	74																							
0.691 - 0.710 (0.0272 - 0.0280)	42	44	46	48	50	52	54	56	58	58	60	60	62	62	64	64	66	66	68	68	70	70	72	72	74																								
0.711 - 0.730 (0.0280 - 0.0287)	44	46	48	50	52	54	56	58	60	60	62	62	64	64	66	66	68	68	70	70	72	72	74																									
0.731 - 0.750 (0.0288 - 0.0295)	46	48	50	52	54	56	58	60	62	62	64	64	66	66	68	68	70	70	72	72	74																										
0.751 - 0.770 (0.0296 - 0.0303)	48	50	52	54	56	58	60	62	64	64	66	66	68	68	70	70	72	72	74																												
0.771 - 0.790 (0.0304 - 0.0311)	50	52	54	56	58	60	62	64	66	66	68	68	70	70	72	72	74																														
0.791 - 0.810 (0.0311 - 0.0319)	52	54	56	58	60	62	64	66	68	68	70	70	72	72	74																														
0.811 - 0.830 (0.0319 - 0.0327)	54	56	58	60	62	64	66	68	70	70	72	72	74																														
0.831 - 0.850 (0.0327 - 0.0335)	56	58	60	62	64	66	68	70	72	72	74																														
0.851 - 0.870 (0.0335 - 0.0343)	58	60	62	64	66	68	70	72	74																														
0.871 - 0.890 (0.0343 - 0.0350)	60	62	64	66	68	70	72																														
0.891 - 0.910 (0.0351 - 0.0358)	62	64	66	68	70	72																														
0.911 - 0.930 (0.0359 - 0.0366)	64	66	68	70	72																														
0.931 - 0.950 (0.0367 - 0.0374)	66	68	70	72																															
0.951 - 0.970 (0.0374 - 0.0382)	68	70	72																																
0.971 - 0.990 (0.0382 - 0.0390)	70	72																																	
0.991 - 1.010 (0.0390 - 0.0398)	72																																		

Exhaust valve clearance (Cold):
0.29 to 0.39 mm (0.0114 to 0.0154 in.)

EXAMPLE:
The 5.340 mm (0.2102 in.) lifter is installed, and the measured clearance is 0.480 mm (0.0189 in.). Replace the 5.340 mm (0.2102 in.) shim with a new No. 48 lifter.

New Lifter Thickness mm (in.)

No.	Thickness	No.	Thickness	No.	Thickness
06	5.060(0.1992)	30	5.300(0.2087)	54	5.540(0.2181)
08	5.080(0.2000)	32	5.320(0.2094)	56	5.560(0.2189)
10	5.100(0.2008)	34	5.340(0.2102)	58	5.580(0.2197)
12	5.120(0.2016)	36	5.360(0.2110)	60	5.600(0.2205)
14	5.140(0.2024)	38	5.380(0.2118)	62	5.620(0.2213)
16	5.160(0.2031)	40	5.400(0.2126)	64	5.640(0.2220)
18	5.180(0.2039)	42	5.420(0.2134)	66	5.660(0.2228)
20	5.200(0.2047)	44	5.440(0.2142)	68	5.680(0.2236)
22	5.220(0.2055)	46	5.460(0.2150)	70	5.700(0.2244)
24	5.240(0.2063)	48	5.480(0.2157)	72	5.720(0.2252)
26	5.260(0.2071)	50	5.500(0.2165)	74	5.740(0.2260)
28	5.280(0.2079)	52	5.520(0.2173)		

(k) Install the No. 3 camshaft.

NOTICE:

As the thrust clearance of the camshaft is small, the camshaft must be kept level while it is being installed. If the camshaft is not kept level, the portion of the cylinder head which receives the shaft thrust may crack or be damaged, causing the camshaft to seize or break. To avoid this, the following steps should be carried out.

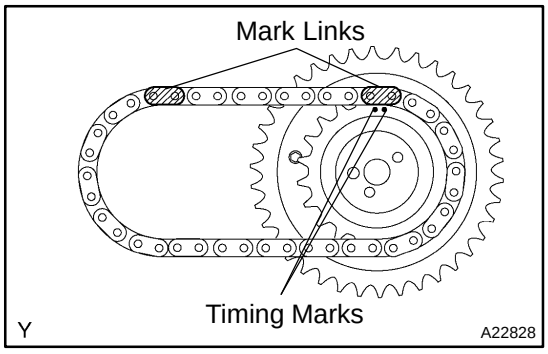

(1) Align the mark link (yellow) with the timing mark (2−dot mark) of the camshaft timing gear assembly as shown in the illustration.

(2) Apply new engine oil to the thrust portions and journals of the camshafts.

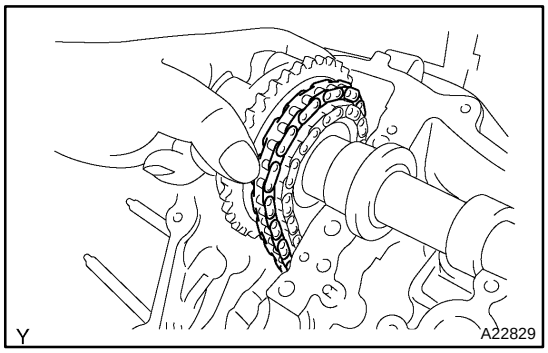

(3) Temporarily put the No. 1 chain on the No. 2 chain of the camshaft timing gear assembly.

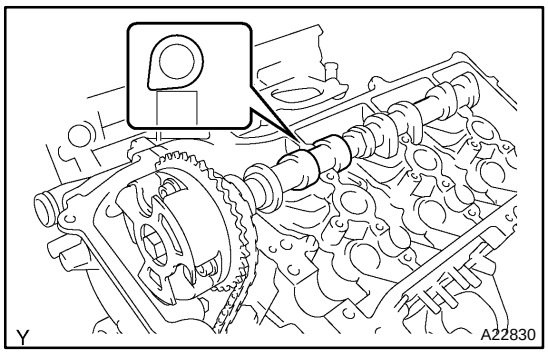

(4) Set the No. 3 camshaft onto the LH cylinder head with the cam lobes of the No. 2 cylinder facing downward as shown in the illustration.

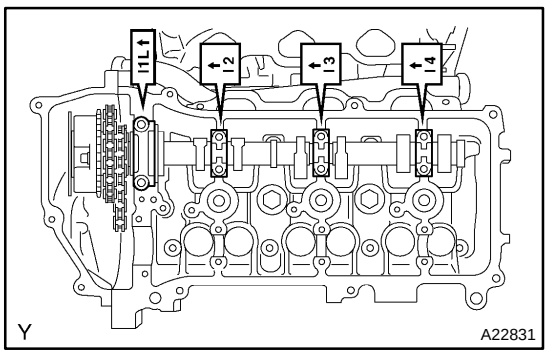

(5) Install the 4 bearing caps in their proper locations.

(6) Apply a light coat of engine oil to the threads of the bearing cap bolts.

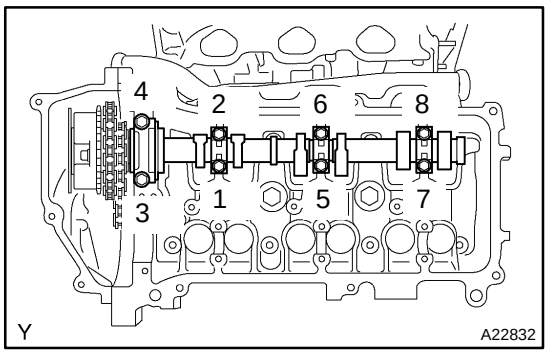

(7) Install the 8 bearing cap bolts. Using several steps, tighten the bolts uniformly in the sequence as shown in the illustration.

Torque:
9.0 N·m (92 kgf·cm, 80 in.·lbf) for 10 mm (0.39 in.) head
24 N·m (245 kgf·cm, 18 ft·lbf) for 12 mm (0.47 in.) head

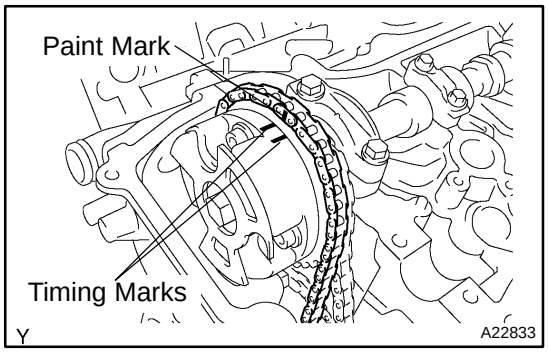

(8) Set the paint mark of the No. 1 chain between the timing marks of the camshaft timing gear assembly.

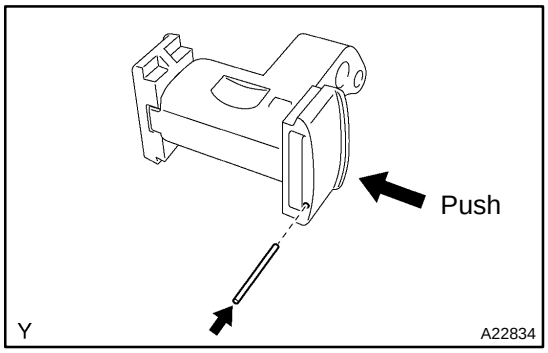

(l) Install the chain tensioner No. 2.
(1) While pushing in the tensioner, insert a pin of ϕ 1.0 mm (0.039 in.) into the hole to fix it.

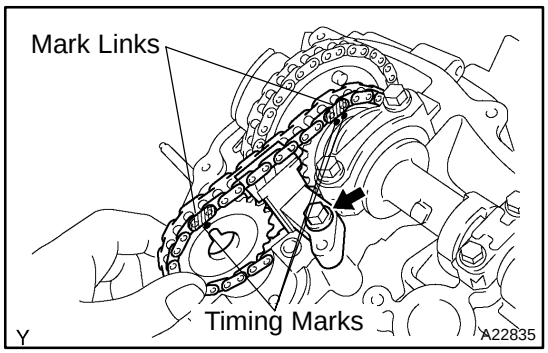

(2) Temporarily install the camshaft timing assembly and chain tensioner No. 2 and align the mark links (yellow) with the timing marks (1−dot mark and 2−dot mark) of the camshaft timing sprocket and camshaft timing gear assembly.
(3) Tighten the chain tensioner No. 3 bolt.

Torque: 19 N·m (194 kgf·cm, 14 ft·lbf)

(m) Install the No. 4 camshaft.

NOTICE:

As the thrust clearance of the camshaft is small, the camshaft must be kept level while it is being installed. If the camshaft is not kept level, the portion of the cylinder head which receives the shaft thrust may crack or be damaged, causing the camshaft to seize or break. To avoid this, the following steps should be carried out.

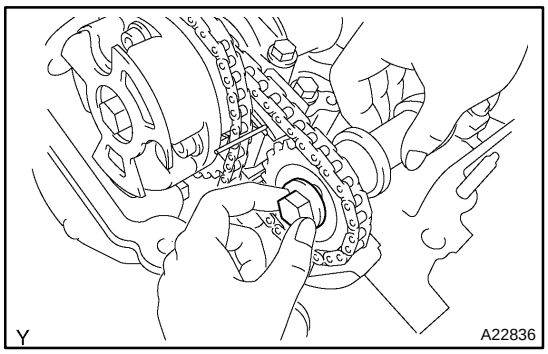

(1) Align the knock pin hole on the camshaft timing sprocket with the knock pin of the No. 4 camshaft, and insert the No. 4 camshaft into the camshaft timing sprocket.
(2) Temporarily install the camshaft timing sprocket set bolt.

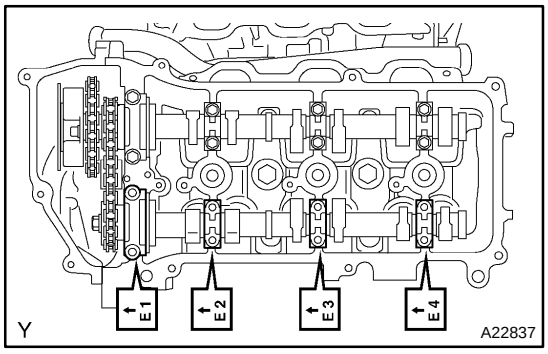

(3) Install the 4 bearing caps in their proper locations.
(4) Apply a light coat of engine oil to the threads and under the heads of the bearing cap bolts.

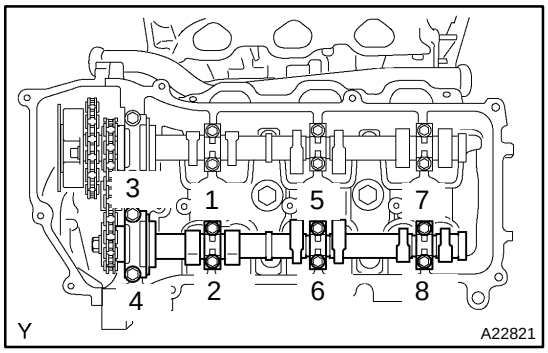

(5) Install the 8 bearing cap bolts. Using several steps, tighten the bolts uniformly in the sequence as shown in the illustration.

Torque:
9.0 N·m (92 kgf·cm, 80 in.·lbf) for 10 mm (0.39 in.) head
24 N·m (245 kgf·cm, 18 ft·lbf) for 12 mm (0.47 in.) head

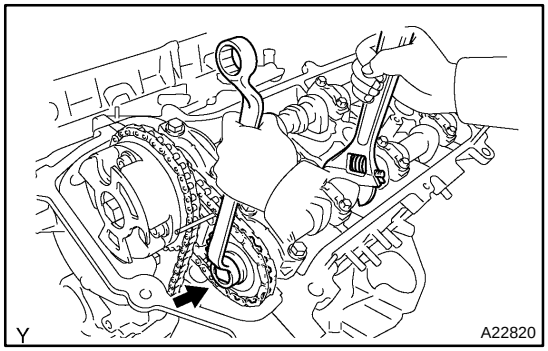

(6) Hold the hexagonal portion of the No. 4 camshaft with a wrench, and tighten the camshaft timing sprocket set bolt.

Torque: 100 N·m (1,020 kgf·cm, 74 ft·lbf)

(7) Remove the pin from the chain tensioner No. 2.

(n) Install the camshaft.

NOTICE:

As the thrust clearance of the camshaft is small, the camshaft must be kept level while it is being installed. If the camshaft is not kept level, the portion of the cylinder head which receives the shaft thrust may crack or be damaged, causing the camshaft to seize or break. To avoid this, the following steps should be carried out.

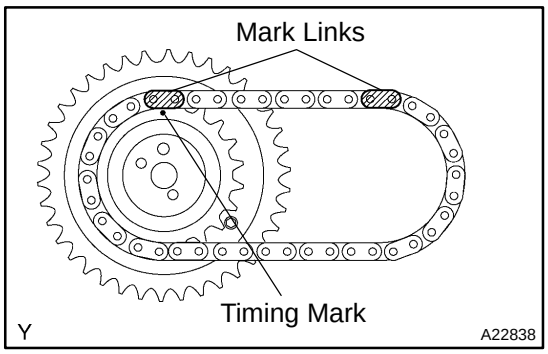

(1) Align the mark link (yellow) with the timing mark (1−dot mark) of the camshaft timing gear assembly as shown in the illustration.
(2) Apply new engine oil to the thrust portions and journals of the camshafts.

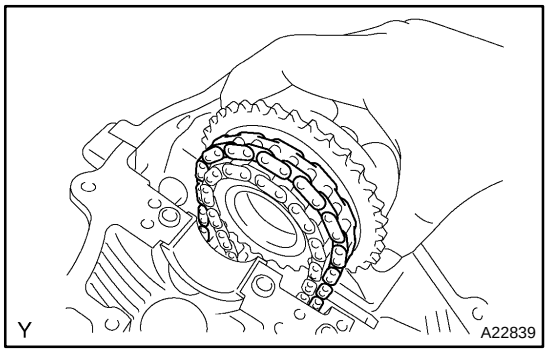

(3) Temporarily put the No. 1 chain on the No. 2 chain of the camshaft timing gear assembly.

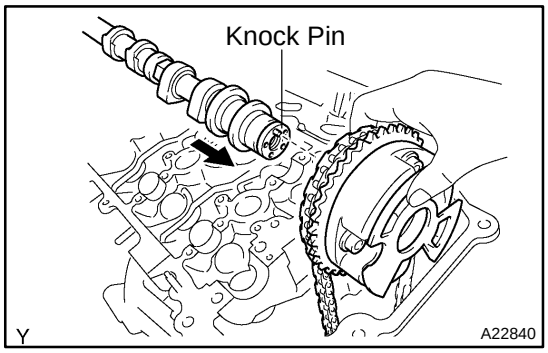

(4) Align the knock pin hole on the camshaft timing gear assembly with the knock pin of the No. 1 camshaft, and insert the No. 1 camshaft into the camshaft timing gear assembly.
(5) Temporarily install the camshaft timing gear assembly set bolt.

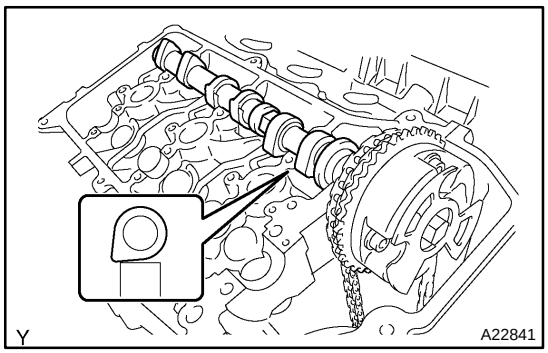

(6) Set the No. 1 camshaft onto the RH cylinder head with the cam lobes of the No. 1 cylinder facing downward as shown in the illustration.

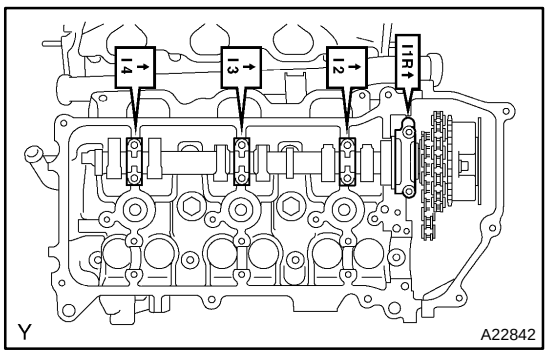

(7) Install the 4 bearing caps in their proper locations.
(8) Apply a light coat of engine oil to the threads and under the heads of the bearing cap bolts.

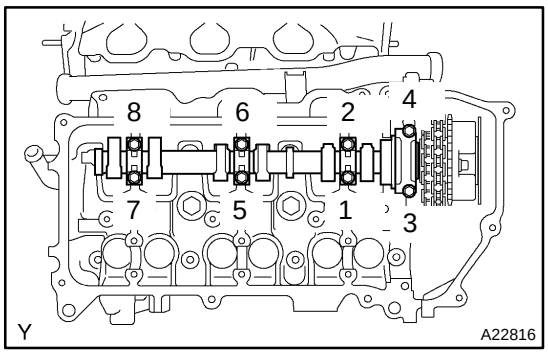

(9) Install the 8 bearing cap bolts. Using several steps, tighten the bolts uniformly in the sequence as shown in the illustration.

Torque:
9.0 N·m (92 kgf·cm, 80 in.·lbf) for 10 mm (0.39 in.) head
24 N·m (245 kgf·cm, 18 ft·lbf) for 12 mm (0.47 in.) head

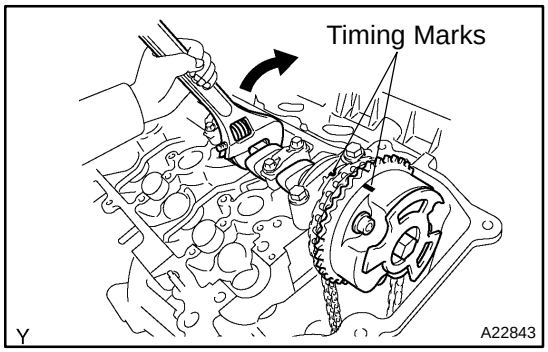

(10) Rotate the No. 1 camshaft clockwise using the hexagonal portion of the No. 1 camshaft so that the timing mark of the camshaft timing gear assembly is aligned with the timing mark of the camshaft bearing cap.

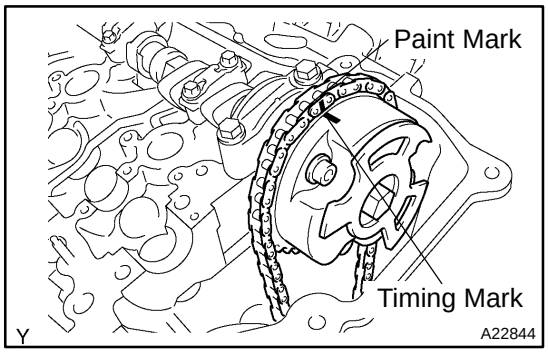

(11) Align the paint mark of the No. 1 chain with the timing mark of the camshaft timing gear assembly.

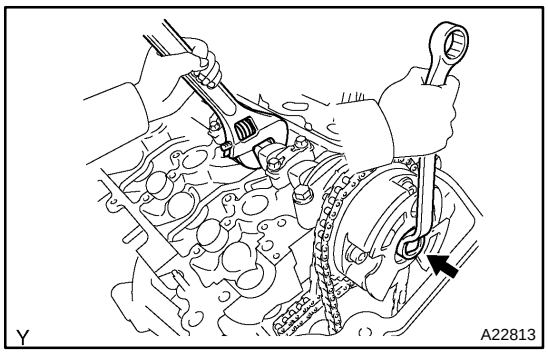

(12) Hold the hexagonal portion of the No. 1 camshaft with a wrench, and tighten the camshaft timing gear assembly set bolt.

Torque: 100 N·m (1,020 kgf·cm, 74 ft·lbf)

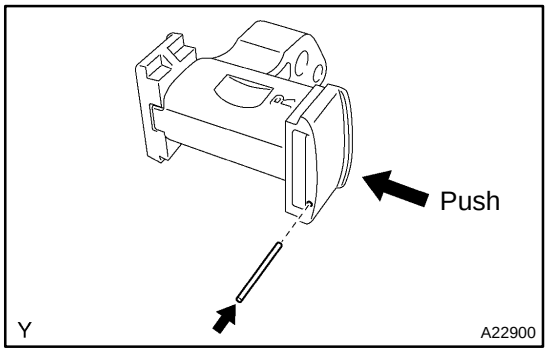

(o) Install the chain tensioner No. 2.

(1) While pushing in the tensioner, insert a pin of ϕ 1.0 mm (0.039 in.) into the hole to fix it.

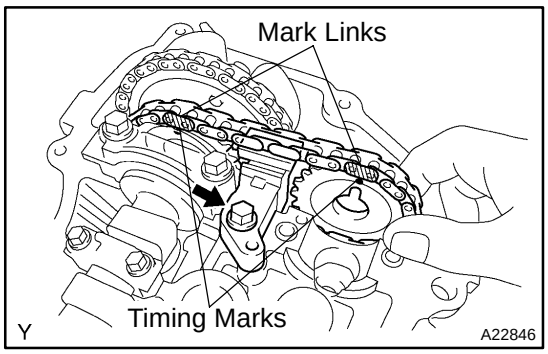

(2) Temporarily install the camshaft timing gear and chain tensioner No. 2 and align the mark links (yellow) with the timing marks (1−dot mark) of the camshaft timing gear assembly and camshaft timing sprocket.

(3) Tighten the chain tensioner No. 2 bolt.

Torque: 19 N·m (194 kgf·cm, 14 ft·lbf)

(p) Install the No. 2 camshaft.

NOTICE:

As the thrust clearance of the camshaft is small, the camshaft must be kept level while it is being installed. If the camshaft is not kept level, the portion of the cylinder head which receives the shaft thrust may crack or be damaged, causing the camshaft to seize or break. To avoid this, the following steps should be carried out.

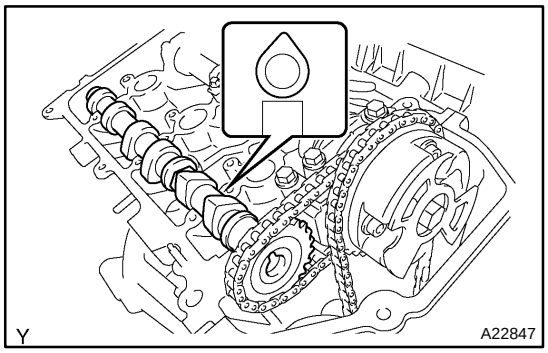

(1) Set the No. 2 camshaft onto the RH cylinder head with the cam lobes of No. 1 cylinder facing upward as shown in the illustration.

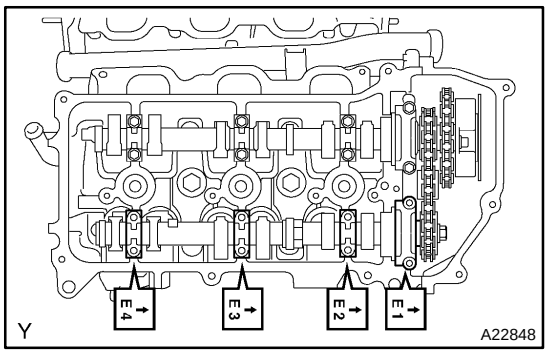

(2) Install the 4 bearing caps in their proper locations.

(3) Apply a light coat of engine oil to the threads and under the heads of the bearing cap bolts.

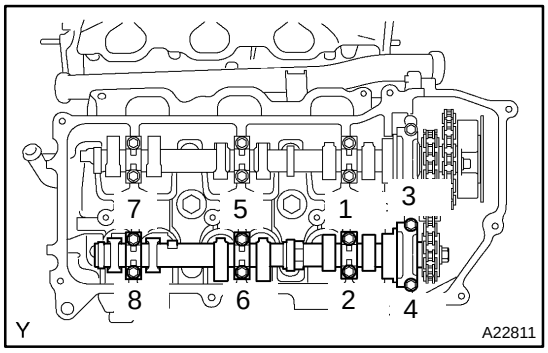

(4) Install the 8 bearing cap bolts. Using several steps, tighten the bolts uniformly in the sequence as shown in the illustration.

Torque:

9.0 N·m (92 kgf·cm, 80 in.·lbf) for 10 mm (0.39 in.) head

24 N·m (245 kgf·cm, 18 ft·lbf) for 12 mm (0.47 in.) head

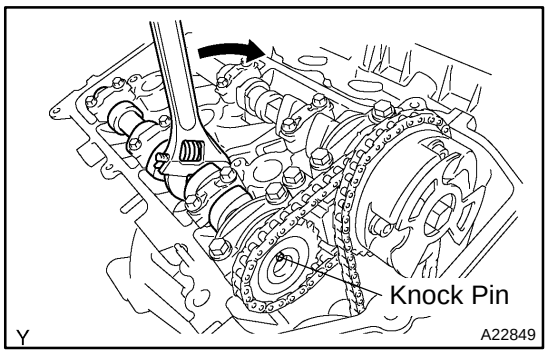

(5) Rotate the No. 2 camshaft clockwise using a wrench so that the knock pin of the No. 2 camshaft is aligned with the knock pin hole of the camshaft timing sprocket.

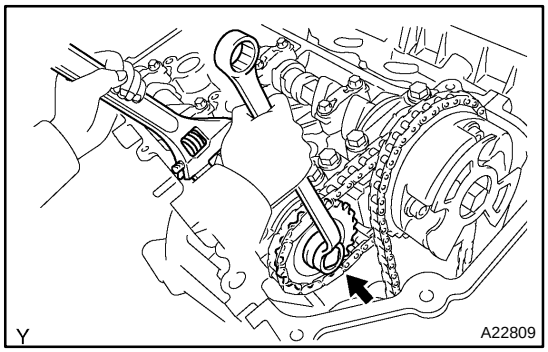

(6) Hold the hexagonal portion of the No. 2 camshaft with a wrench, and install the camshaft timing sprocket set bolt.

Torque: 100 N·m (1,020 kgf·cm, 74 ft·lbf)

(7) Remove the pin from the chain tensioner No. 2.

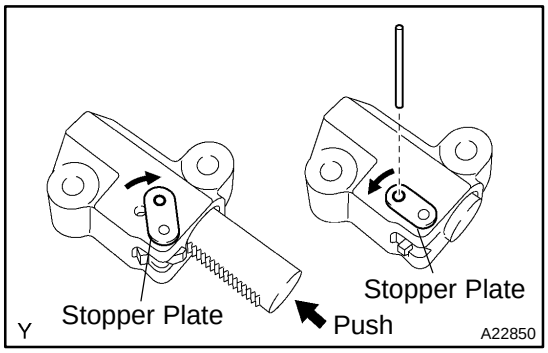

(q) Install the chain tensioner No. 1.

(1) While turning the stopper plate of the tensioner clockwise, push in the plunger of the tensioner as shown in the illustration.

(2) While turning the stopper plate of the tensioner counterclockwise, insert a bar of ϕ 3.5 mm (0.138 in.) into the holes on the stopper plate and tensioner to fix the stopper plate.

(3) Install the chain tensioner with the 2 bolts.

Torque: 10 N·m (102 kgf·cm, 7 ft·lbf)

(4) Remove the bar from the chain tensioner.

(5) Install a new gasket and the timing chain cover plate with the 4 bolts.

Torque: 9.0 N·m (92 kgf·cm, 80 in.·lbf)

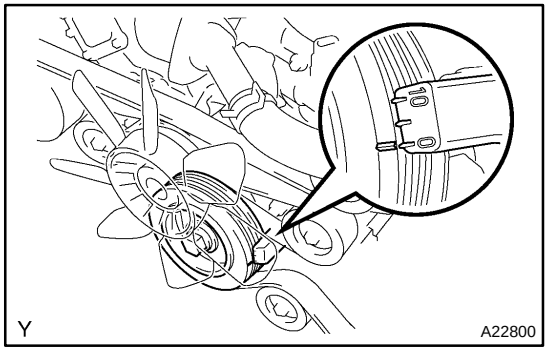

(6) Turn the crankshaft pulley 2 complete revolutions slowly, and align the notch with the timing mark ”0” of the timing chain cover.

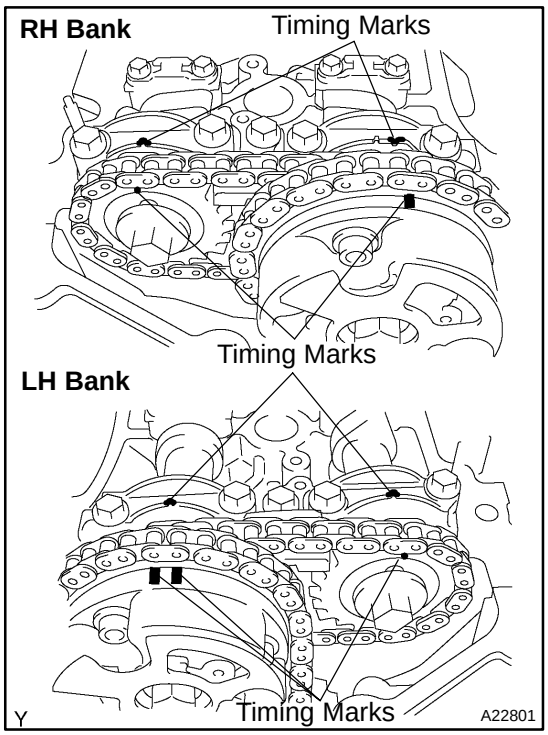

(7) Check that the timing marks of the camshaft timing gear assembly and camshaft timing sprocket are aligned with the timing marks of the bearing caps as shown in the illustration.

10. **INSTALL CYLINDER HEAD COVER (See page EM−89)**
11. **INSTALL IGNITION COIL**
12. **INSTALL INTAKE AIR SURGE TANK (See page EM−89)**
13. **INSTALL AIR CLEANER (See page EM−89)**
14. **ADD ENGINE COOLANT (See page CO−2)**
15. **INSTALL V−BANK COVER**
16. **INSPECT IGNITION TIMING (See page EM−23)**

CO/HC

INSPECTION

EM0KQ−09

HINT:

This check is used only to determine whether or not the idle CO/HC complies with regulations.

1. INITIAL CONDITIONS

(a) Engine at normal operating temperature
(b) Air cleaner installed
(c) All pipes and hoses of air induction system connected
(d) All accessories switched OFF
(e) All vacuum lines properly connected
(f) SFI system wiring connectors fully plugged
(g) Ignition timing checked correctly
(h) Transmission in neutral position
(i) Tachometer and CO/HC meter calibrated by hand

2. START ENGINE

3. RACE ENGINE AT 2,500 RPM FOR APPROX. 180 SECONDS

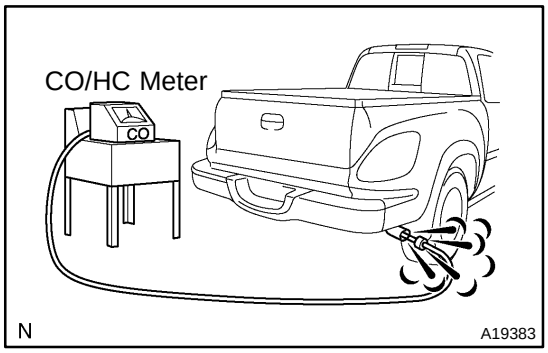

4. INSERT CO/HC METER TESTING PROBE AT LEAST 40 cm (1.3 ft) INTO TAILPIPE DURING IDLING

5. IMMEDIATELY CHECK CO/HC CONCENTRATION AT IDLE AND/OR 2,500 RPM

HINT:

When performing the 2 mode (2,500 rpm and idle) test, follow the measurement orders are prescribed by the applicable local regulations.

If the CO/HC concentration does not comply with regulations, perform troubleshooting in the order given below.

(1) Check the air−fuel ratio sensors and heated oxygen sensors operation (see page DI−507 and DI−512).

(2) See the table below for possible causes, and then inspect and correct the applicable causes if necessary.

CO	HC	Problems	Causes
Normal	High	Rough idle	1. Faulty ignitions: • Incorrect timing • Fouled, shorted or improperly gapped plugs 2. Incorrect valve clearance 3. Leaky intake and exhaust valves 4. Leaky cylinders
Low	High	Rough idle (fluctuating HC reading)	1. Vacuum leaks: • PCV hose • Intake manifold • Throttle body • Brake booster line 2. Lean mixture causing misfire
High	High	Rough idle (Black smoke from exhaust)	1. Restricted air filter 2. Faulty SFI system: • Faulty pressure regulator • Defective ECT sensor • Faulty ECM • Faulty injectors • Faulty throttle position sensor • Faulty MAF meter

COMPRESSION

INSPECTION

EM0KR−11

HINT:

If there is lack of power, excessive oil consumption or poor fuel economy, measure the compression pressure.

1. WARM UP AND STOP ENGINE

Allow the engine to warm up to normal operating temperature.

2. REMOVE SPARK PLUGS (See page IG−1)

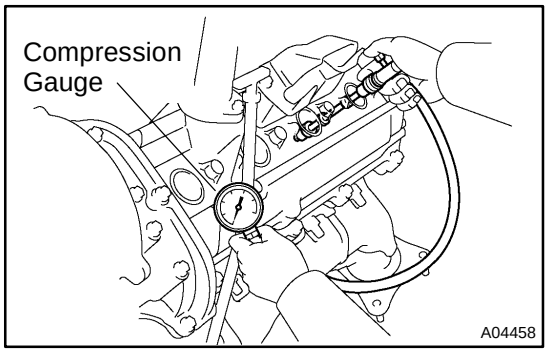

3. CHECK CYLINDER COMPRESSION PRESSURE

(a) Insert a compression gauge into the spark plug hole.

(b) Fully open the throttle.

(c) While cranking the engine, measure the compression pressure.

HINT:

Always use a fully charged battery to obtain engine speed of 250 rpm or more.

(d) Repeat steps (a) through (c) for each cylinder.

NOTICE:

This measurement must be done in as short a time as possible.

Compression pressure:
1,373 kPa (14.0 kgf/cm^2, 199 psi) or more
Minimum pressure:
1,030 kPa (10.5 kgf/cm^2, 149 psi)
Difference between each cylinder:
98 kPa (1.0 kgf/cm^2, 14 psi) or less

(e) If the cylinder compression in one or more cylinders is low, pour small amount of engine oil into the cylinder through the spark plug hole and repeat steps (a) through (c) for cylinders with low compression.

- If adding oil helps the compression, chances are that the piston rings and/or cylinder bore are worn or damaged.
- If pressure stays low, a valve may be sticking or seating is improper, or there may be leakage past the gasket.

4. REINSTALL SPARK PLUGS (See page IG−1)

CYLINDER BLOCK

EM0E9−18

COMPONENTS

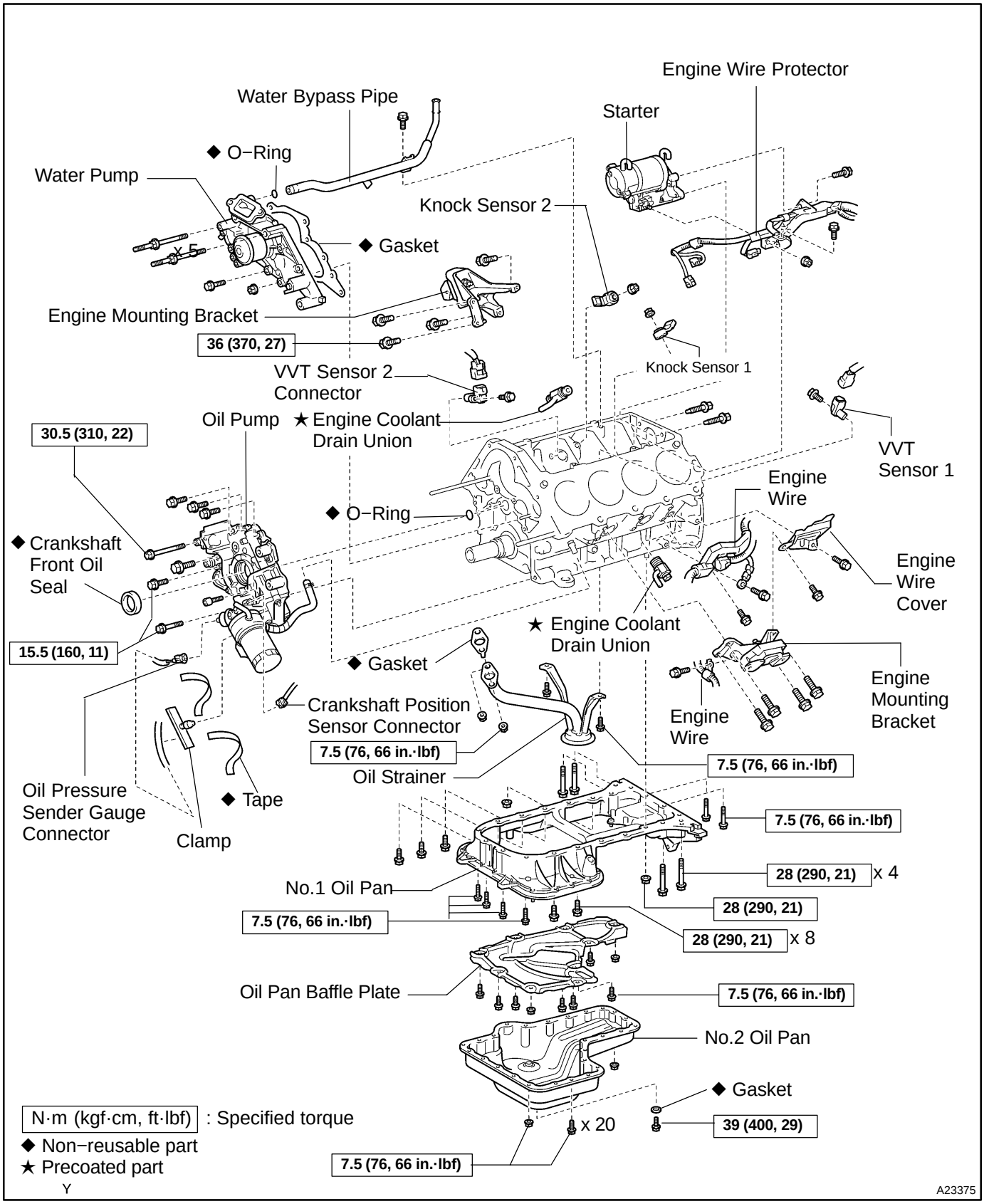

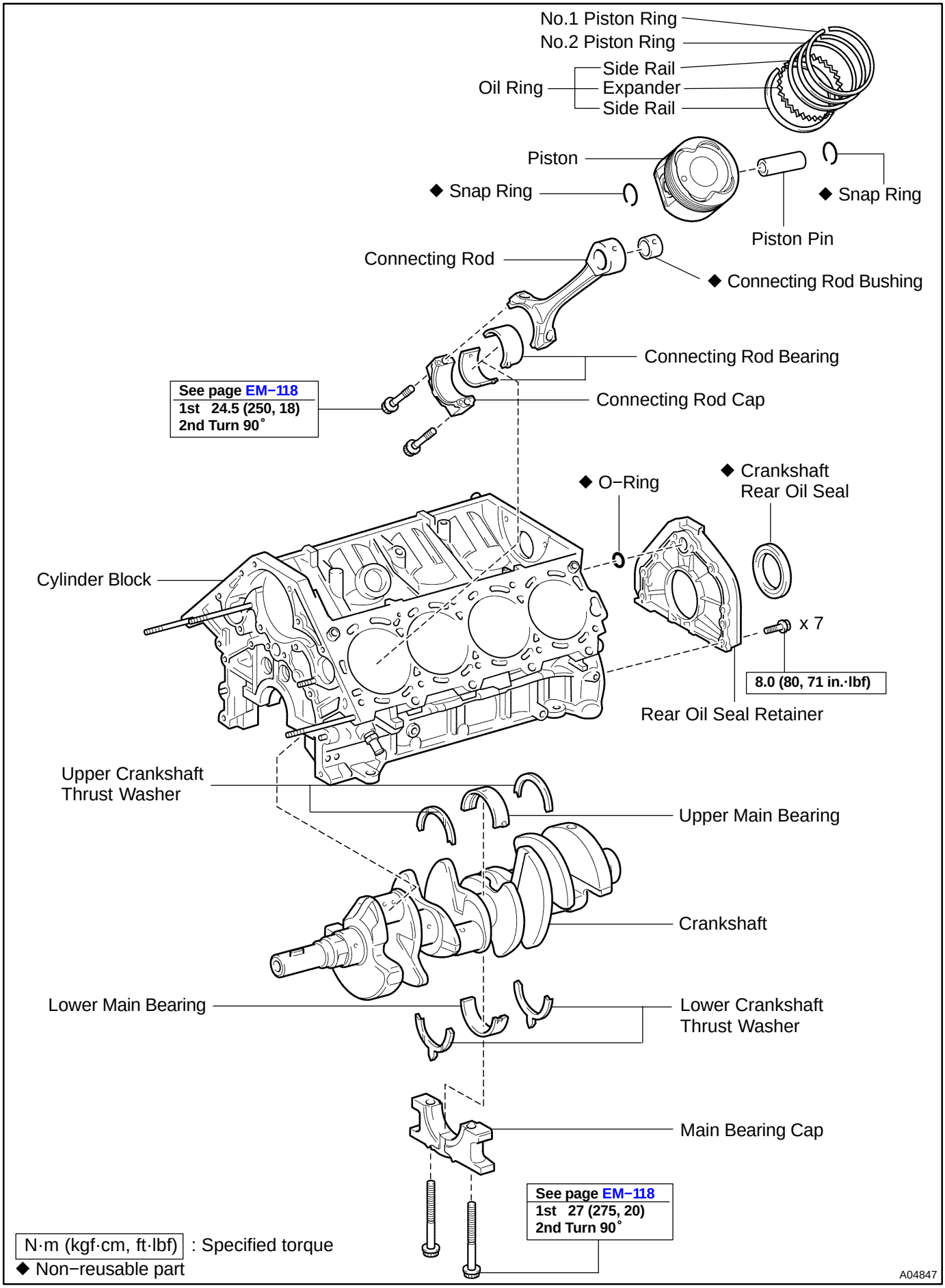
No.1 Piston Ring
No.2 Piston Ring
Oil Ring
Side Rail
Expander
Side Rail
Piston
◆ Snap Ring
◆ Snap Ring
Piston Pin
Connecting Rod
◆ Connecting Rod Bushing
Connecting Rod Bearing
See page EM−118
1st 24.5 (250, 18)
2nd Turn 90°
Connecting Rod Cap
◆ O−Ring
◆ Crankshaft
Rear Oil Seal
Cylinder Block
x 7
8.0 (80, 71 in.·lbf)
Rear Oil Seal Retainer
Upper Crankshaft
Thrust Washer
Upper Main Bearing
Crankshaft
Lower Main Bearing
Lower Crankshaft
Thrust Washer
Main Bearing Cap
See page EM−118
1st 27 (275, 20)
2nd Turn 90°
N·m (kgf·cm, ft·lbf) : Specified torque
◆ Non−reusable part
A04847

EM122−06

DISASSEMBLY

1. INSTALL ENGINE TO ENGINE STAND
2. REMOVE TIMING BELT AND PULLEYS (See page EM−16)
3. REMOVE CYLINDER HEAD (See page EM−36)

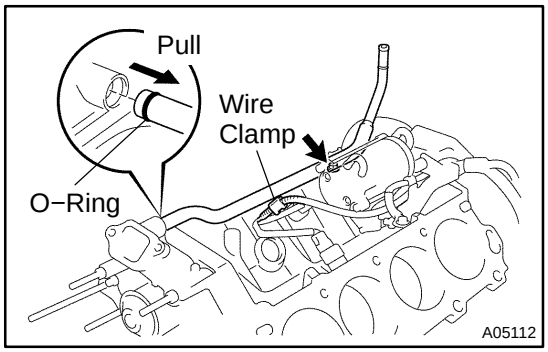

4. REMOVE WATER BYPASS PIPE

(a) Disconnect the wire clamp (for knock sensor 1, 2) from bracket of the water bypass pipe.
(b) Remove the bolt.
(c) Pull out the water bypass pipe from the water pump.
(d) Remove the O−ring from the water bypass pipe.

5. REMOVE STARTER (See page ST−6)
6. REMOVE KNOCK SENSORS (See page SF−70)
7. REMOVE VVT SENSORS (See page SF−79)

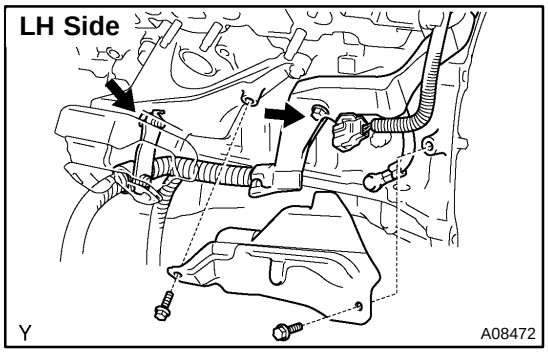

8. DISCONNECT ENGINE WIRE FROM LH SIDE OF CYLINDER BLOCK

(a) Remove the 2 bolts and engine wire cover from the LH side of the cylinder block.
(b) Remove the 2 bolts, disconnect the brackets on the engine wire from the cylinder block and engine mounting bracket.

9. REMOVE OIL COOLER PIPE BRACKET FOR A/T

Remove the bolt and bracket.

10. REMOVE ENGINE MOUNTING BRACKETS

Remove the 4 bolts and mounting bracket. Remove the 2 mounting brackets.

11. REMOVE WATER PUMP (See page CO−6)
12. REMOVE NO.2 OIL PAN (See page LU−8)
13. REMOVE OIL PAN BAFFLE PLATE
14. REMOVE NO.1 OIL PAN (See page LU−8)
15. REMOVE OIL STRAINER
16. REMOVE OIL PUMP (See page LU−8)
17. REMOVE ENGINE COOLANT DRAIN UNIONS

Remove the 2 drain unions.

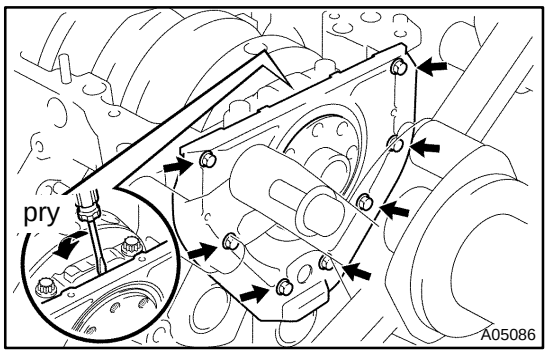

18. REMOVE REAR OIL SEAL RETAINER

(a) Remove the 7 bolts.

(b) Using a screwdriver, remove the oil seal retainer by prying the portion between the oil seal retainer and main bearing cap.

(c) Remove the O−ring.

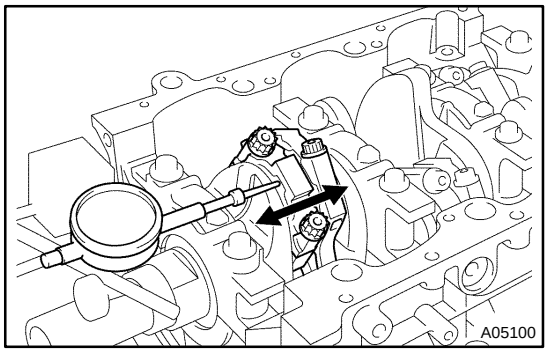

19. CHECK CONNECTING ROD THRUST CLEARANCE

Using a dial indicator, measure the thrust clearance while moving the connecting rod back an forth.

Standard thrust clearance:
0.160 to 0.290 mm (0.0063 to 0.0114 in.)
Maximum thrust clearance: 0.35 mm (0.0138 in.)

If the thrust clearance is greater than maximum, replace the connecting rod assembly(s). If necessary, replace the crankshaft.

Connecting rod thickness:
22.880 to 22.920 mm (0.9008 to 0.9024 in.)

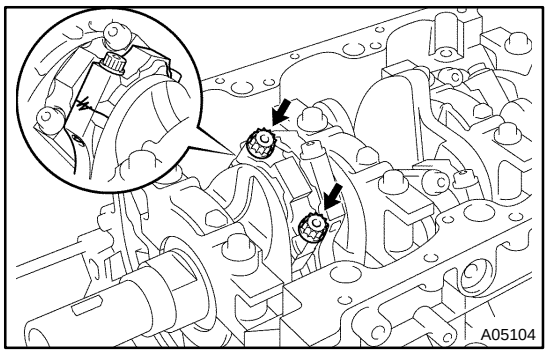

20. REMOVE CONNECTING ROD CAPS AND CHECK OIL CLEARANCE

(a) Check the matchmarks on the connecting rod and see it cap to ensure correct reassembly.

(b) Remove the 2 connecting rod cap bolts.

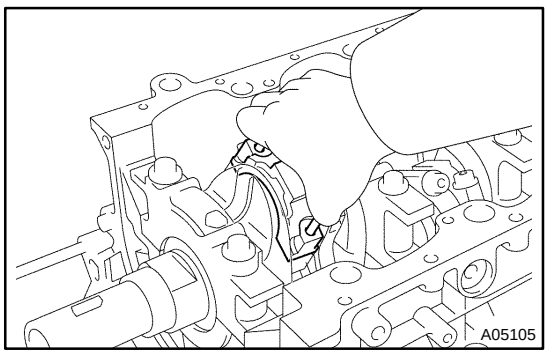

(c) Using the 2 removed connecting rod cap bolts, remove the connecting rod cap and lower bearing by wiggling the connecting rod cap right and left.

HINT:

Keep the lower bearing inserted with the connecting rod cap.

(d) Clean the crank pin and bearing.

(e) Check the crank pin and bearing for peeling and scratches.

If the crank pin or bearing is damaged, replace the bearings. If necessary, replace the crankshaft.

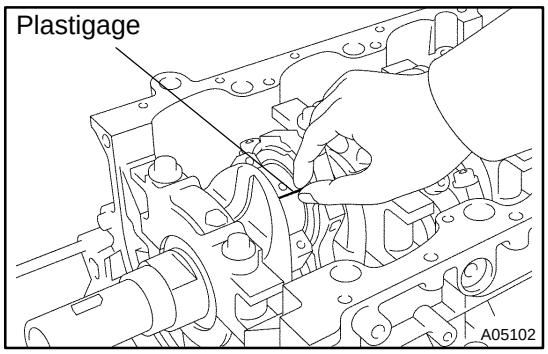

(f) Lay a strip of Plastigage across the crank pin.

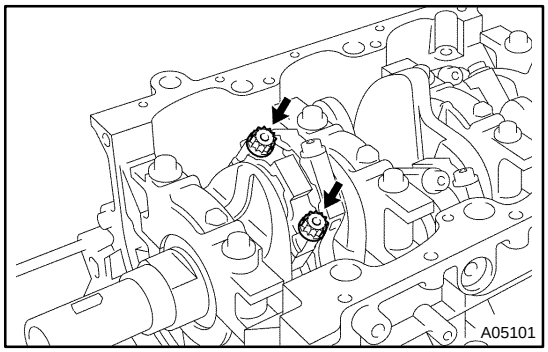

(g) Install the connecting rod cap with the 2 bolts.
(see page EM−118)

NOTICE:
Do not turn the crankshaft.

(h) Remove the 2 bolts, connecting rod cap and lower bearing. (See procedure (b) and (c) above)

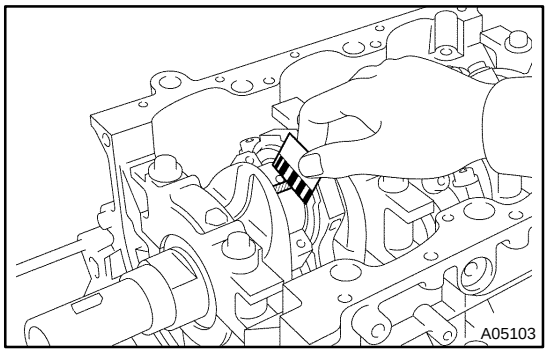

(i) Measure the Plastigage at its widest point.
Standard oil clearance:
0.021 to 0.047 mm (0.0008 to 0.0019 in.)
Maximum oil clearance: 0.059 mm (0.0023 in.)

If the oil clearance is greater than maximum, replace the bearings. If necessary, replace the crankshaft.

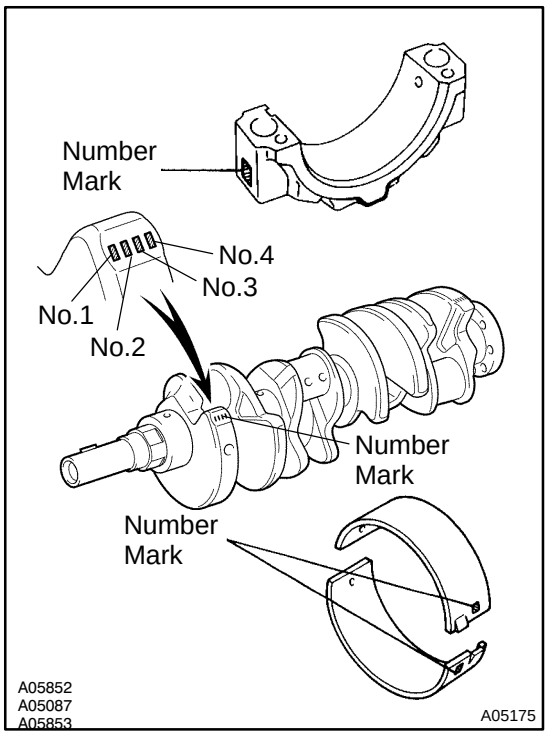

HINT:
If using a standard bearing, replace it with one having the same number. If the number of the bearing cannot be determined, select the correct bearing by adding together the numbers imprinted on the connecting rod cap and crankshaft, then selecting the bearing with the same number as the total. There are 6 sizes of standard bearings, marked ”2”, ”3”, ”4”, ”5”, ”6” and ”7”.

	Number mark											
Connecting rod cap	1	1	2	1	2	3	2	3	4	3	4	4
Crankshaft	1	2	1	3	2	1	3	2	1	3	2	3
Use bearing	2	3		4			5			6		7

EXAMPLE:
Connecting rod cap ”3” + Crankshaft ”1”
= Total number 4 (Use bearing ”4”)

Reference

Connecting rod big end inside diameter:

Mark ”1”	55.000 to 55.006 mm (2.1654 to 2.1656 in.)
Mark ”2”	55.006 to 55.012 mm (2.1656 to 2.1658 in.)
Mark ”3”	55.012 to 55.018 mm (2.1658 to 2.1661 in.)
Mark ”4”	55.018 to 55.024 mm (2.1661 to 2.1663 in.)

Crankshaft crank pin diameter:

Mark ”1”	51.994 to 52.000 mm (2.0470 to 2.0472 in.)
Mark ”2”	51.988 to 51.994 mm (2.0468 to 2.0470 in.)
Mark ”3”	51.982 to 51.988 mm (2.0465 to 2.0468 in.)

Standard sized bearing center wall thickness:

Mark ”2”	1.487 to 1.490 mm (0.0585 to 0.0587 in.)
Mark ”3”	1.490 to 1.493 mm (0.0587 to 0.0588 in.)
Mark ”4”	1.493 to 1.496 mm (0.0588 to 0.0589 in.)
Mark ”5”	1.496 to 1.499 mm (0.0589 to 0.0590 in.)
Mark ”6”	1.499 to 1.502 mm (0.0590 to 0.0591 in.)
Mark ”7”	1.502 to 1.505 mm (0.0591 to 0.0593 in.)

(j) Completely remove the Plastigage.

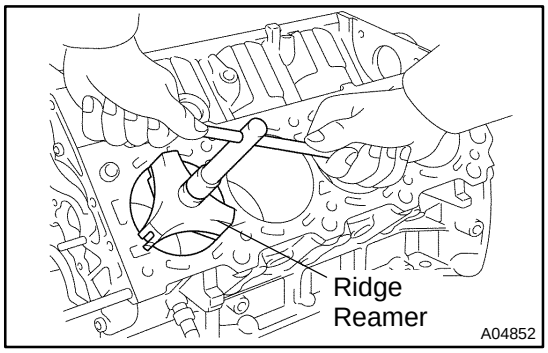

21. REMOVE PISTON AND CONNECTING ROD ASSEMBLIES

(a) Using a ridge reamer, remove all the carbon from the top of the cylinder.

(b) Push the piston, connecting rod assembly and upper bearing through the top of the cylinder block.

HINT:

- Keep the bearings, connecting rod and cap together.
- Arrange the piston and connecting rod assemblies in correct order.

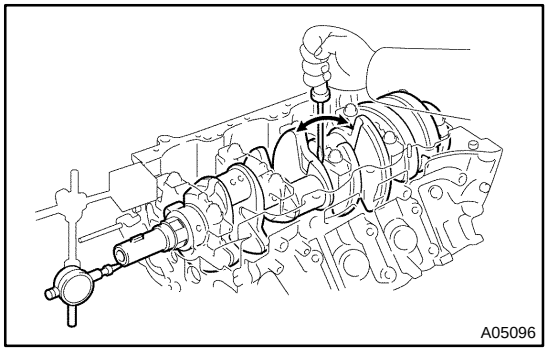

22. CHECK CRANKSHAFT THRUST CLEARANCE

Using a dial indicator, measure the thrust clearance while prying the crankshaft back and forth with a screwdriver.

Standard thrust clearance:

0.020 to 0.220 mm (0.0008 to 0.0087 in.)

Maximum thrust clearance: 0.30 mm (0.0118 in.)

If the thrust clearance is greater than maximum, replace the thrust washers as a set.

Thrust washer thickness:

2.440 to 2.490 mm (0.0961 to 0.0980 in.)

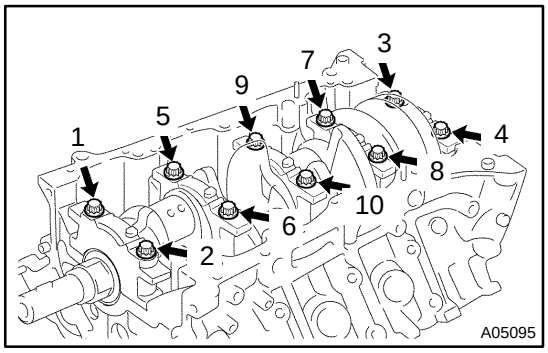

23. REMOVE MAIN BEARING CAPS AND CHECK OIL CLEARANCE

(a) Uniformly loosen and remove the 10 main bearing cap bolts in several passes, in the sequence shown.

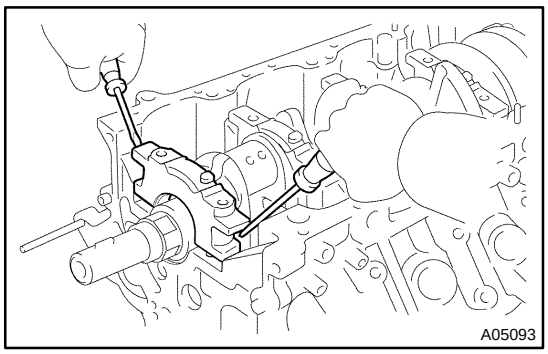

(b) Using 2 screwdrivers, pry out the main bearing cap, and remove the 5 main bearing caps, 5 lower bearings and 2 lower thrust washers (No.3 main bearing cap only).

NOTICE:

Be careful not to damage the cylinder block.

HINT:

- Keep the lower bearing and main bearing cap together.
- Arrange the main bearing caps and lower thrust washers in correct order.

(c) Lift out the crankshaft.

HINT:

Keep the upper bearings and upper thrust washers together with the cylinder block.

(d) Clean each main journal and bearing.

(e) Check each main journal and bearing for peelings and scratches.

If the journal or bearing is damaged, replace the bearings. If necessary, replace the crankshaft.

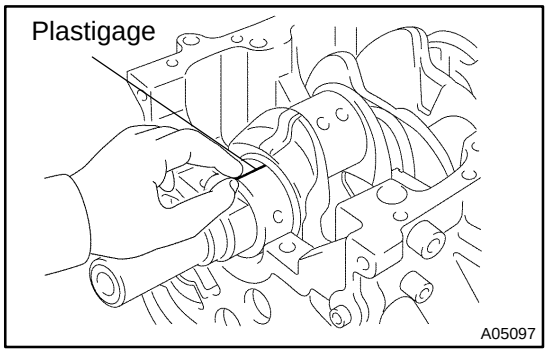

(f) Place the crankshaft on the cylinder block.

(g) Lay a strip of Plastigage across each journal.

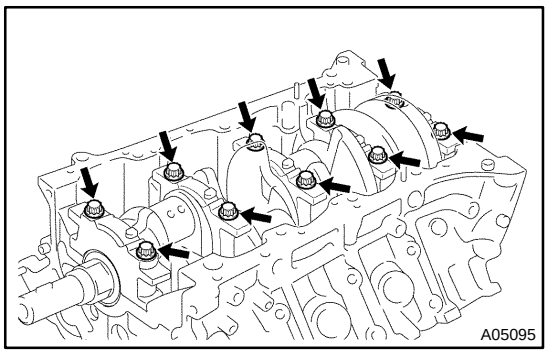

(h) Install the main bearing caps. (See page EM−118)

NOTICE:

Do not turn the crankshaft.

(i) Remove the main bearing caps.
(See procedure (a) and (b) above)

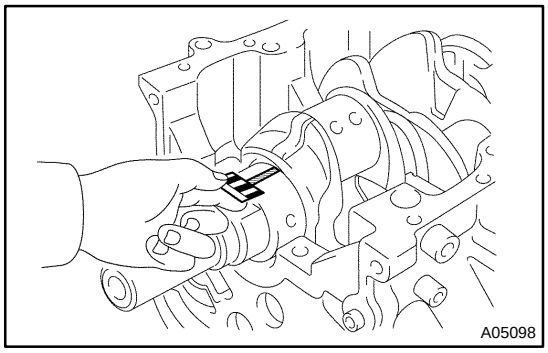

(j) Measure the Plastigage at its widest point.

Standard clearance:
No.1, No.5
0.028 to 0.046 mm (0.0011 to 0.0018 in.)
Others
0.040 to 0.058 mm (0.0016 to 0.0023 in.)
Maximum clearance: 0.065 mm (0.0026 in.)

If the oil clearance is greater than maximum, replace the bearings. If necessary, replace the crankshaft.

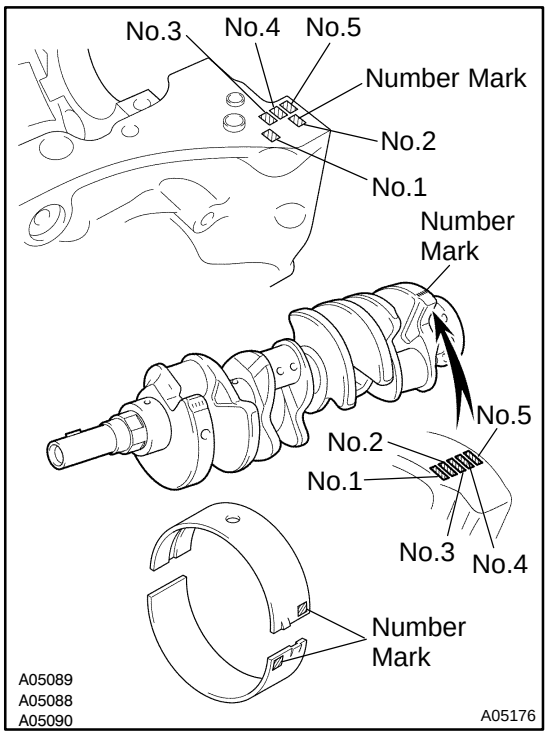

HINT:
If using a standard bearing, replace it with one having the same number. If the number of the bearing cannot be determined, select the correct bearing by adding together the numbers imprinted on the cylinder block and crankshaft, then refer to the table below for the appropriate bearing number. There are 5 sizes of the standard bearings. For No.1 and No.5 position bearings, use bearings marked ”3”, ”4”, ”5”, ”6” and ”7”. For others position bearings, use bearings marked ”1”, ”2”, ”3”, ”4” and ”5”.

No.1, No.5

	Mark	Use bearing
Cylinder block (A) + Crankshaft (B)	0 to 5	3
	6 to 11	4
	12 to 17	5
	18 to 23	6
	24 to 28	7

EXAMPLE:
Cylinder block ”08” + Crankshaft ”06”
= Total number 14 (Use bearing ”5”)

Others

	Mark	Use bearing
Cylinder block (A) + Crankshaft (B)	0 to 5	1
	6 to 11	2
	12 to 17	3
	18 to 23	4
	24 to 28	5

EXAMPLE:
Cylinder block ”08” + Crankshaft ”06”
= Total number 14 (Use bearing ”3”)

Reference
Cylinder block main journal bore diameter (A):

Mark ”00”	72.000 mm (2.8346 in.)
Mark ”01”	72.001 mm (2.8347 in.)
Mark ”02”	72.002 mm (2.8347 in.)
Mark ”03”	72.003 mm (2.8348 in.)
Mark ”04”	72.004 mm (2.8348 in.)
Mark ”05”	72.005 mm (2.8348 in.)
Mark ”06”	72.006 mm (2.8349 in.)
Mark ”07”	72.007 mm (2.8349 in.)
Mark ”08”	72.008 mm (2.8350 in.)
Mark ”09”	72.009 mm (2.8350 in.)
Mark ”10”	72.010 mm (2.8350 in.)
Mark ”11”	72.011 mm (2.8351 in.)
Mark ”12”	72.012 mm (2.8351 in.)
Mark ”13”	72.013 mm (2.8352 in.)
Mark ”14”	72.014 mm (2.8352 in.)

Mark ”15”	72.015 mm (2.8352 in.)
Mark ”16”	72.016 mm (2.8353 in.)

Crankshaft main journal diameter (B):

Mark ”00”	67.000 mm (2.6378 in.)
Mark ”01”	66.999 mm (2.6378 in.)
Mark ”02”	66.998 mm (2.6377 in.)
Mark ”03”	66.997 mm (2.6377 in.)
Mark ”04”	66.996 mm (2.6376 in.)
Mark ”05”	66.995 mm (2.6376 in.)
Mark ”06”	66.994 mm (2.6376 in.)
Mark ”07”	66.993 mm (2.6375 in.)
Mark ”08”	66.992 mm (2.6375 in.)
Mark ”09”	66.991 mm (2.6374 in.)
Mark ”10”	66.990 mm (2.6374 in.)
Mark ”11”	66.989 mm (2.6374 in.)
Mark ”12”	66.988 mm (2.6373 in.)

Standard bearing center wall thickness:
No.1 and No.5

Mark ”3”	2.487 to 2.490 mm (0.0979 − 0.0980 in.)
Mark ”4”	2.490 to 2.493 mm (0.0980 − 0.0981 in.)
Mark ”5”	2.493 to 2.496 mm (0.0981 − 0.0983 in.)
Mark ”6”	2.496 to 2.499 mm (0.0983 − 0.0984 in.)
Mark ”7”	2.499 to 2.502 mm (0.0984 − 0.0985 in.)

Others

Mark ”1”	2.481 to 2.484 mm (0.0977 − 0.0978 in.)
Mark ”2”	2.484 to 2.487 mm (0.0978 − 0.0979 in.)
Mark ”3”	2.487 to 2.490 mm (0.0979 − 0.0980 in.)
Mark ”4”	2.490 to 2.493 mm (0.0980 − 0.0981 in.)
Mark ”5”	2.493 to 2.496 mm (0.0981 − 0.0983 in.)

(k) Completely remove the Plastigage.

24. REMOVE CRANKSHAFT

(a) Lift up the crankshaft.

(b) Remove the 5 upper main bearings and 2 upper thrust washers from the cylinder block.

HINT:
Arrange the main bearing caps, bearings and thrust washers in correct order.

25. CHECK FIT BETWEEN PISTON AND PISTON PIN

Try to move the piston back and forth on the piston pin.
If any movement is felt, replace the piston and pin as a set.

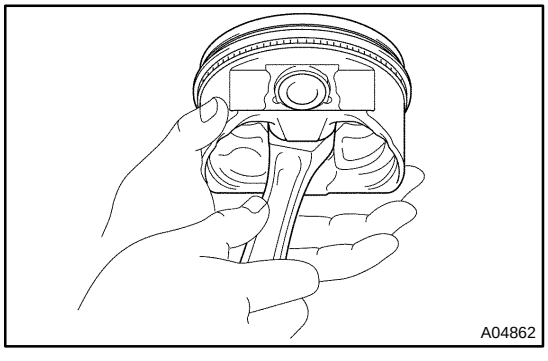
A04862

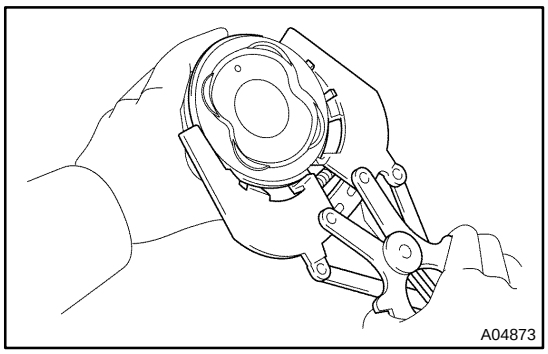

26. REMOVE PISTON RINGS

(a) Using a piston ring expander, remove the 2 compression rings.

(b) Remove the 2 side rails and oil ring by hand.

HINT:

Arrange the piston rings in correct order only.

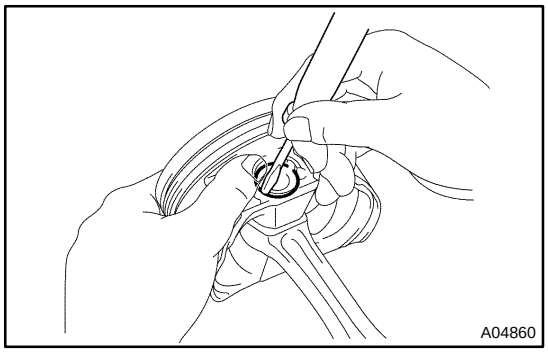

27. DISCONNECT CONNECTING ROD FROM PISTON

(a) Using a small screwdriver, pry out the 2 snap rings.

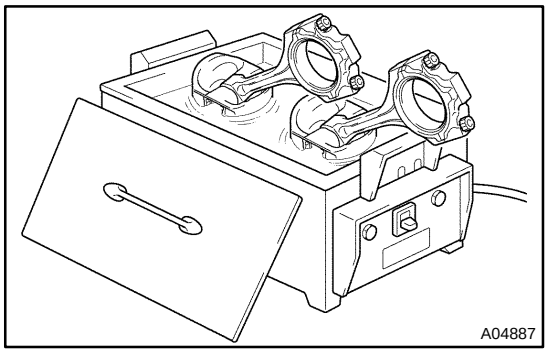

(b) Gradually heat the piston to approx. 60°C (140°F).

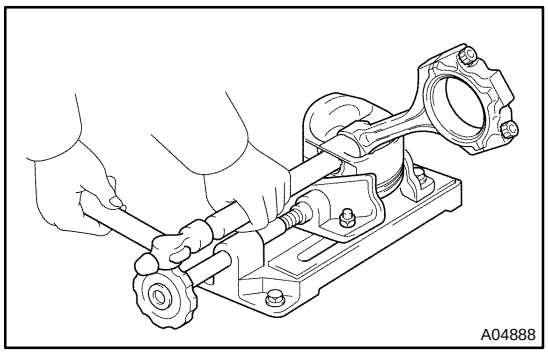

(c) Using a plastic−faced hammer and brass bar, lightly tap out the piston pin and pin and remove the connecting rod.

HINT:

- The piston and pin are a matched set.
- Arrange the pistons, pins, rings, connecting rods and bearings in correct order.

EM0EB−20

INSPECTION

1. CLEAN CYLINDER BLOCK

(a) Using a gasket scraper, remove all the gasket material from the top surface of the cylinder block.

(b) Using a soft brush and solvent, thoroughly clean the cylinder block.

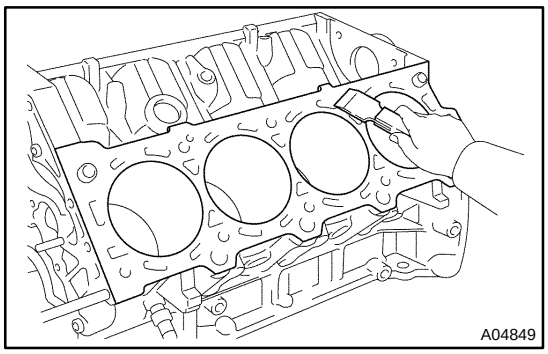

2. INSPECT CYLINDER BLOCK

(a) Inspect for flatness.

Using a precision straight edge and feeler gauge, measure the surfaces contacting the cylinder head and main bearing cap for warpage.

Maximum warpage: 0.07 mm (0.0028 in.)

If warpage is greater than maximum, replace the cylinder block.

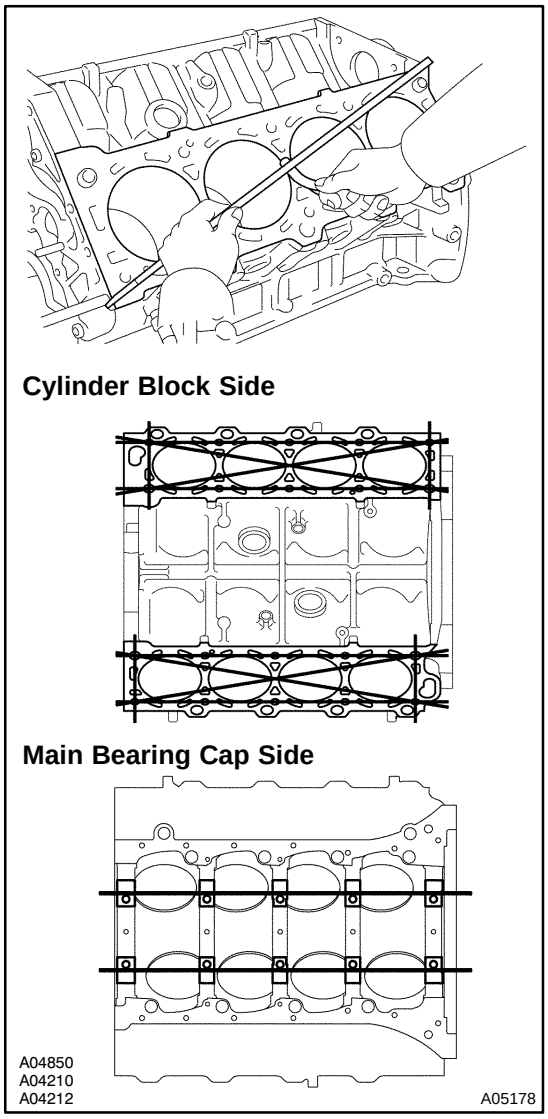

(b) Visually check the cylinder for vertical scratches.

If deep scratches are present, rebore all the 8 cylinders and replace all the 8 pistons. (See page EM−115) If necessary, replace the cylinder block.

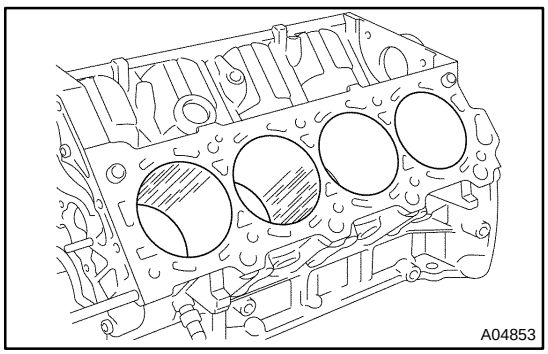

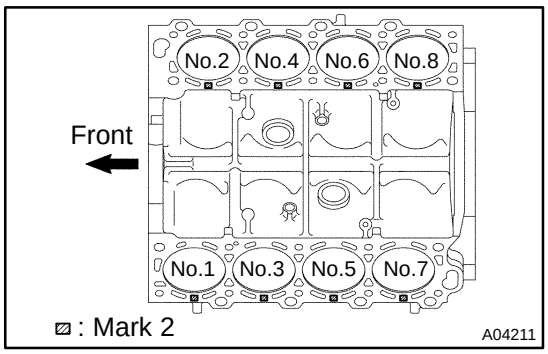

(c) Inspect the cylinder bore diameter.

HINT:

There is 1 size of the standard cylinder bore diameter, marked "2" accordingly. The mark is stamped on the top of the cylinder block.

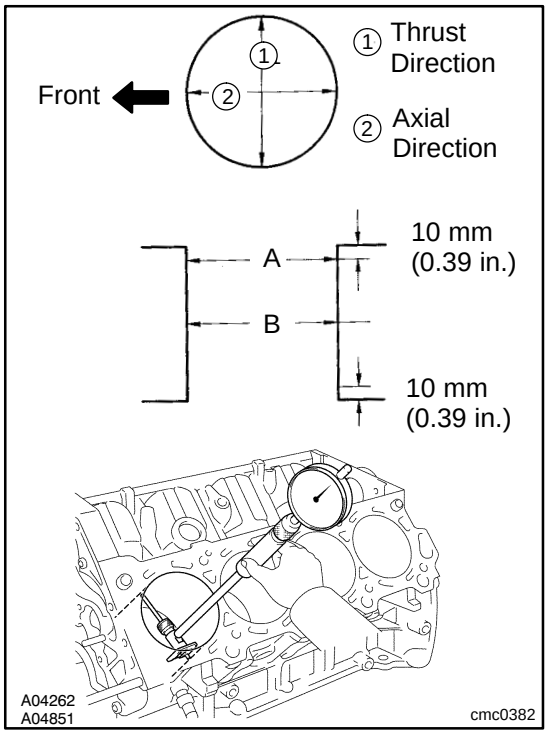

Using a cylinder gauge, measure the cylinder bore diameter at positions A and B in the thrust and axial directions.

Standard diameter:

94.010 to 94.023 mm (3.7012 to 3.7017 in.)

Maximum diameter:

STD	94.223 mm (3.7096 in.)
O/S 0.50	94.723 mm (3.7292 in.)

If the diameter is greater than maximum, rebore all the 8 cylinders and replace all the 8 pistons. (See page EM−115) If necessary, replace the cylinder block.

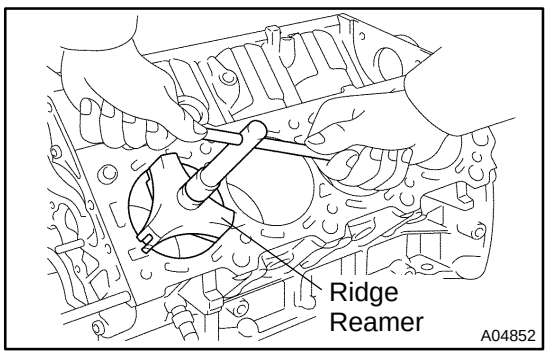

(d) Remove the cylinder ridge.

If the wear is less than 0.2 mm (0.008 in.), using a ridge reamer, grind the top of the cylinder.

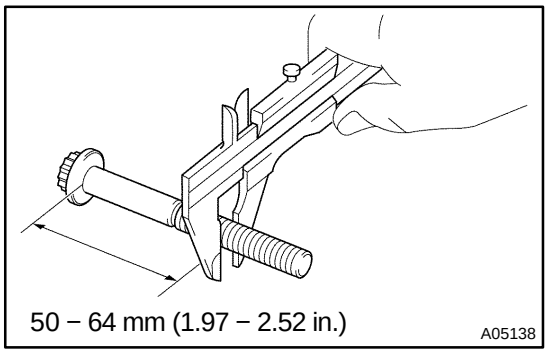

(e) Using vernier calipers, measure the thread outside diameter of the main bearing cap bolt.

Standard diameter:

10.760 to 10.970 mm (0.4236 to 0.4319 in.)

Minimum diameter: 10.40 mm (0.4094 in.)

If the diameter is less than minimum, replace the cap bolt.

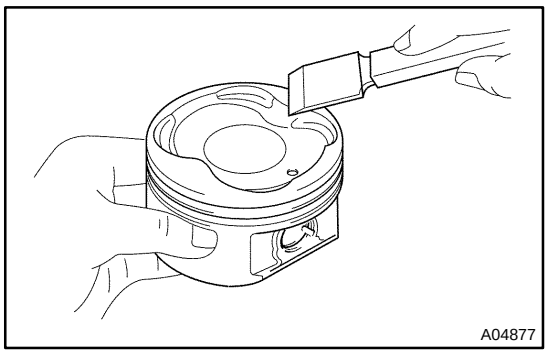

3. CLEAN PISTON

(a) Using a gasket scraper, remove the carbon from the piston top.

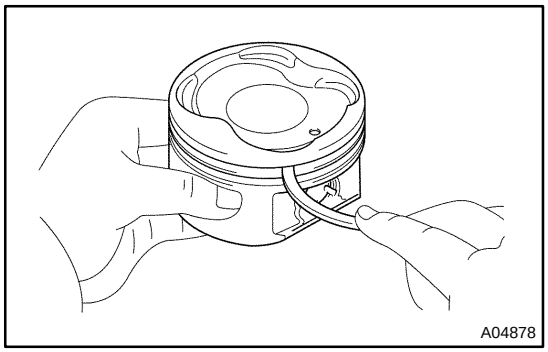

(b) Using a groove cleaning tool or broken ring, clean the piston ring grooves.

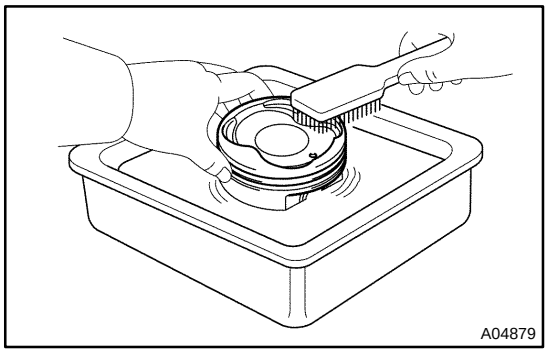

(c) Using solvent and a brush, thoroughly clean the piston.

NOTICE:

Do not use a wire brush.

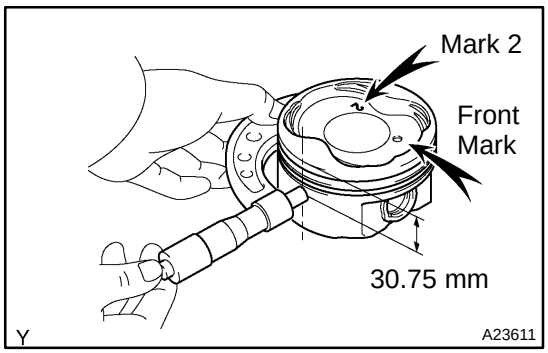

4. INSPECT PISTON AND CONNECTING ROD

(a) Inspect the piston oil clearance.

HINT:

There is 1 size of the standard piston diameter, marked ”2” accordingly. The mark is stamped on the piston top.

(1) Using a micrometer, measure the piston diameter at right angles to the piston pin center line, 30.75 mm (1.2106 in.) from the piston head.

Piston diameter:

STD	Mark ”2”	93.912 to 93.940 mm (3.6973 to 3.6984 in.)
O/S 0.50		94.392 to 94.440 mm (3.7162 to 3.7181 in.)

(2) Measure the cylinder bore diameter in the thrust directions (see step 2 above).

(3) Subtract the piston diameter measurement from the cylinder bore diameter measurement.

Standard oil clearance:
0.030 to 0.071 mm (0.0012 to 0.0028 in.)
Maximum oil clearance: 0.13 mm (0.0051 in.)

If the oil clearance is greater than maximum, replace all the 8 pistons and rebore all the 8 cylinders. (See page EM−115) If necessary, replace the cylinder block.

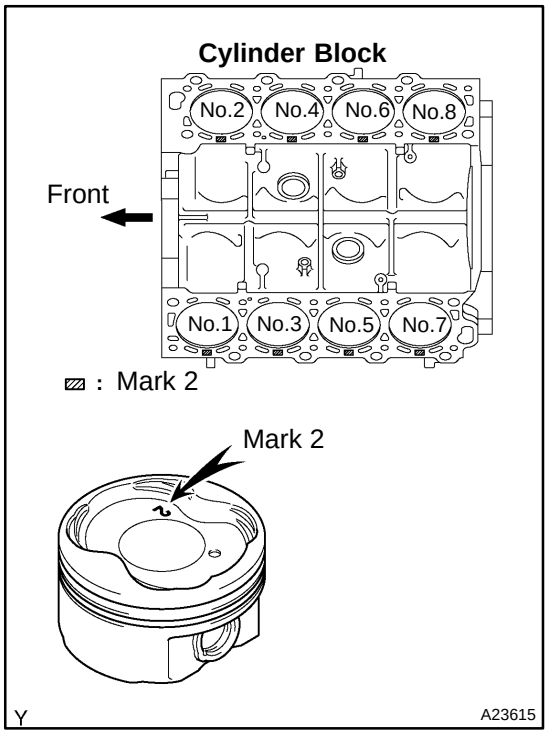

HINT

Use a new cylinder block:

- Use a piston with the same number mark as the cylinder diameter number marked on the cylinder block.

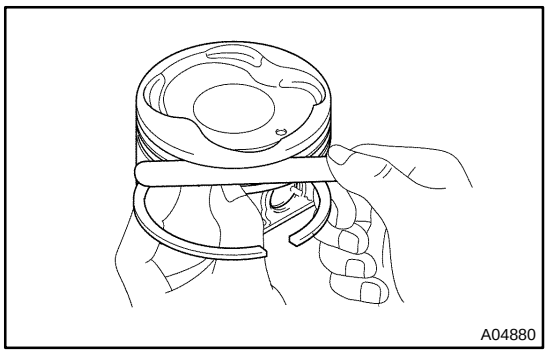

(b) Inspect the piston ring groove clearance.

Using a feeler gauge, measure the clearance between the new piston ring and the wall of the ring groove.

Ring groove clearance:

No.1	0.030 to 0.080 mm (0.0012 to 0.0031 in.)
No.2	0.020 to 0.060 mm (0.0008 to 0.0024 in.)

If the clearance is not as specified, replace the piston.

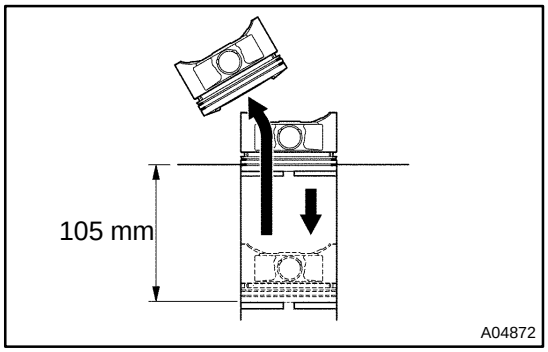

(c) Inspect the piston ring end gap.

(1) Insert the piston ring into the cylinder bore.

(2) Using a piston, push the piston ring a little to the bottom of the ring travel, 105 mm (4.13 in.) from the top of the cylinder block.

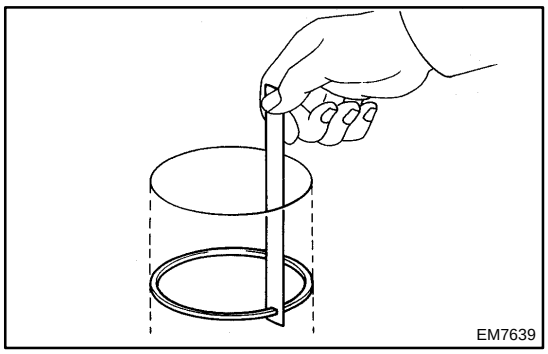

(3) Using a feeler gauge, measure the end gap.

Standard end gap:

No.1	0.300 to 0.400 mm (0.0118 to 0.0157 in.)
No.2	0.450 to 0.600 mm (0.0177 to 0.0236 in.)
Oil (Side rail)	0.100 to 0.350 mm (0.0039 to 0.0138 in.)

Maximum end gap:

No.1	1.10 mm (0.0433 in.)
No.2	1.30 mm (0.0512 in.)
Oil (Side rail)	0.75 mm (0.0295 in.)

If the end gap is greater than maximum, replace the piston ring.
If the end gap is greater than maximum, even with a new piston ring, rebore all the 8 cylinders (See page EM−115) or replace the cylinder block.

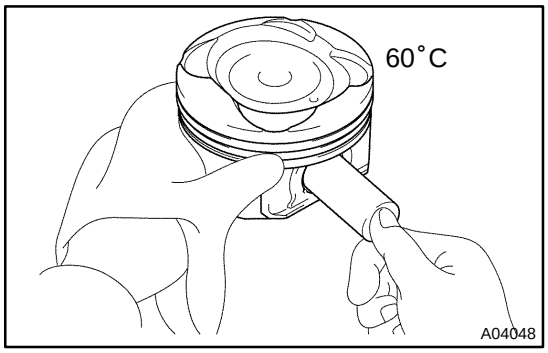

(d) Inspect the piston pin fit.
At 60˚C (140˚F), you should be able to push the piston pin into the piston pin hole with your thumb.

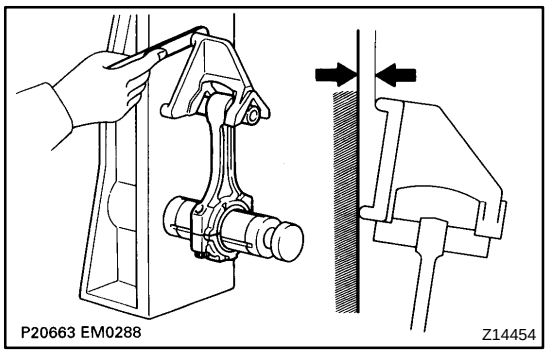

(e) Using a rod aligner and feeler gauge, check the connecting rod alignment.
(1) Check for bend.
Maximum bend:
0.05 mm (0.0020 in.) per 100 mm (3.94 in.)
If bend is greater than maximum, replace the connecting rod assembly.

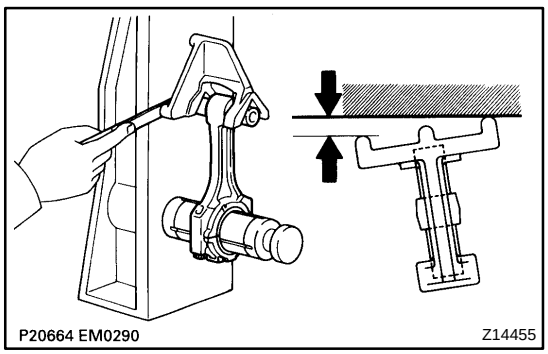

(2) Check for twist.
Maximum twist:
0.15 mm (0.0059 in.) per 100 mm (3.94 in.)
If twist is greater than maximum, replace the connecting rod assembly.

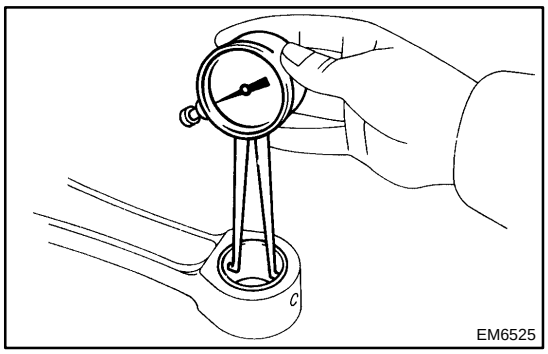

(f) Inspect the piston pin oil clearance.

(1) Using a caliper gauge, measure the inside diameter of the connecting rod bushing.

Bushing inside diameter:
22.005 to 22.014 mm (0.8663 to 0.8667 in.)

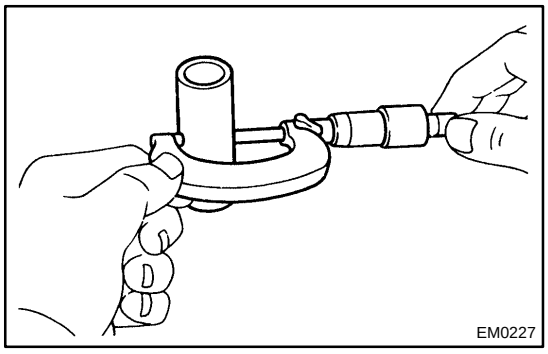

(2) Using a micrometer, measure the piston pin diameter.

Piston pin diameter:
21.997 to 22.009 mm (0.8660 to 0.8664 in.)

(3) Subtract the piston pin diameter measurement from the bushing inside diameter measurement.

Standard oil clearance:
0.005 to 0.011 mm (0.0002 to 0.0004 in.)
Maximum oil clearance: 0.05 mm (0.0020 in.)

If the oil clearance is greater than maximum, replace the bushing. If necessary, replace the piston and piston pin as a set.

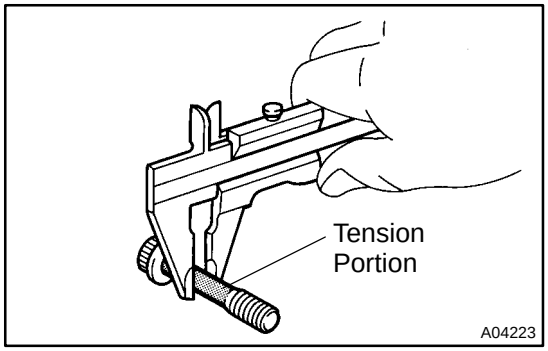

(g) Using vernier calipers, measure the tension portion of the connecting rod bolt.

Standard diameter:
7.200 to 7.300 mm (0.2835 to 0.2874 in.)
Minimum diameter: 7.00 mm (0.2756 in.)

If the diameter is less than the minimum, replace the bolt.

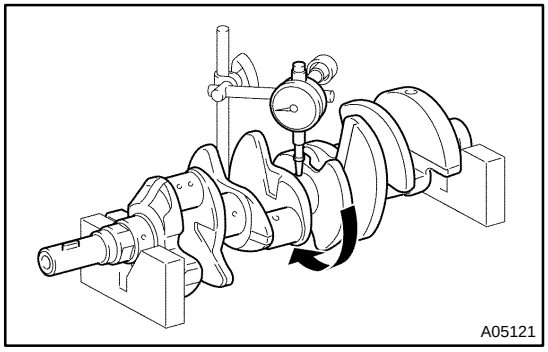

5. INSPECT CRANKSHAFT

(a) Inspect for circle runout.

(1) Place the crankshaft on V−blocks.

(2) Using a dial indicator, measure the circle runout at the center journal.

Maximum circle runout: 0.04 mm (0.0016 in.)

If the circle runout is greater than maximum, replace the crankshaft.

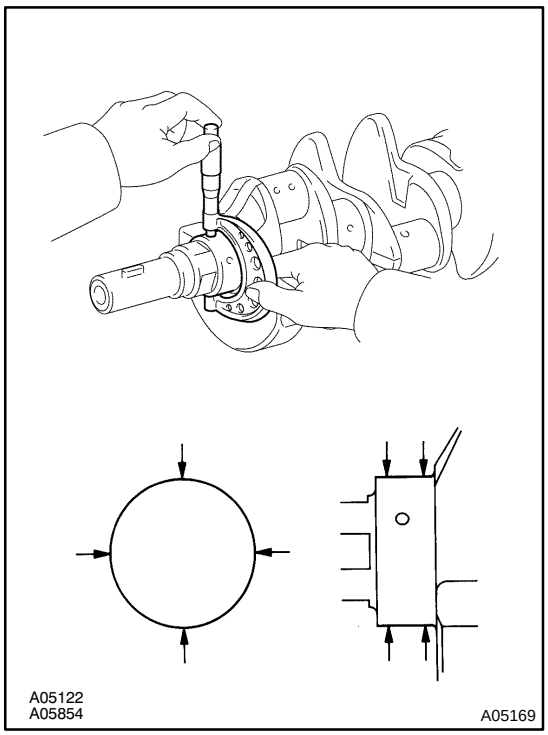

(b) Inspect the main journals and crank pins.

(1) Using a micrometer, measure the diameter of each main journal and crank pin.

Main journal diameter:
66.988 to 67.000 mm (2.6373 to 2.6378 in.)
Crank pin diameter:
51.982 to 52.000 mm (2.0465 to 2.0472 in.)

If the diameter is not as specified, check the oil clearance (See page EM−100). If necessary, replace the crankshaft.

(2) Check each main journal and crank pin for taper and out−of−round as shown.

Maximum taper and out−of−round:
0.02 mm (0.0008 in.)

If the taper and out−of−round is greater than maximum, replace the crankshaft.

EM124−08

REASSEMBLY

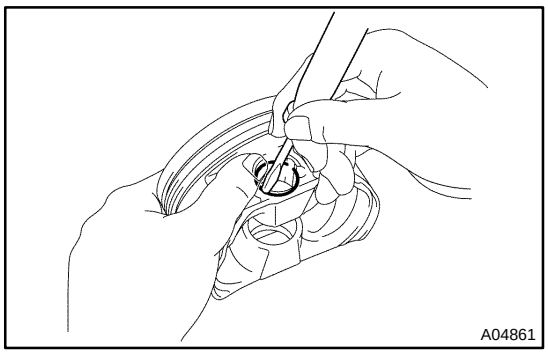

HINT:

- Thoroughly clean all parts to be assembled.
- Before installing the parts, apply new engine oil to all sliding and rotating surfaces.
- Replace all gaskets, O−rings and oil seals with new ones.

1. ASSEMBLE PISTON AND CONNECTING ROD

(a) Using a screwdriver, install a new snap ring on one side of the piston pin hole.

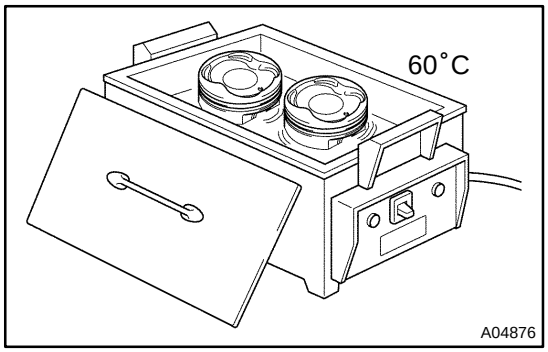

(b) Gradually heat the piston to about 60˚C (140˚F).

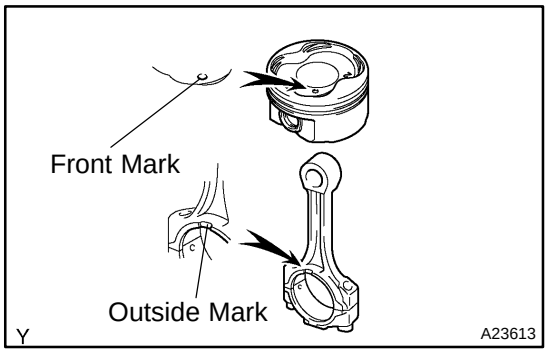

(c) Coat the piston pin with engine oil.

(d) Position the piston so that the front mark and to the outside mark on the connecting rod face in the same direction as shown in the illustration.

(e) Align the piston pin holes of the piston and connecting rod, and push in the piston pin with your thumb.

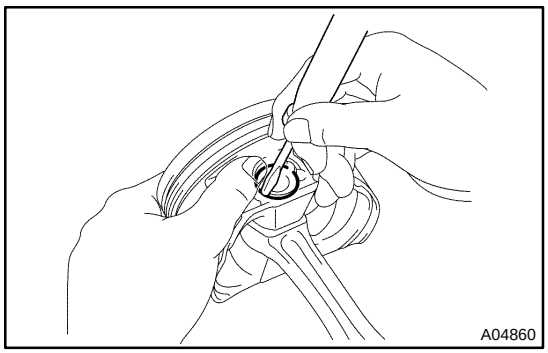

(f) Using a screwdriver, install a new snap ring on the other side of the piston pin hole.

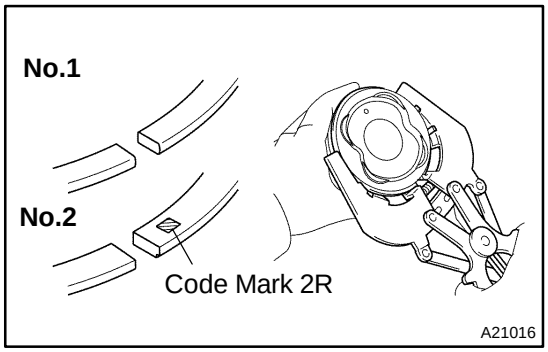

2. INSTALL PISTON RINGS

(a) Install the oil ring expander and 2 side rails by hand.

(b) Using a piston ring expander, install the 2 compression rings.

Code mark:

No.1	None
No.2	2R

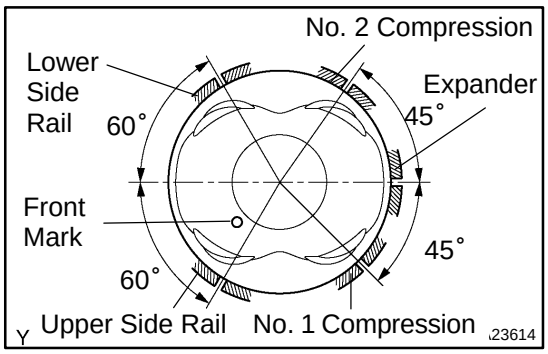

(c) Position the piston rings so that the ring ends are as shown.

NOTICE:

Do not align the ring ends.

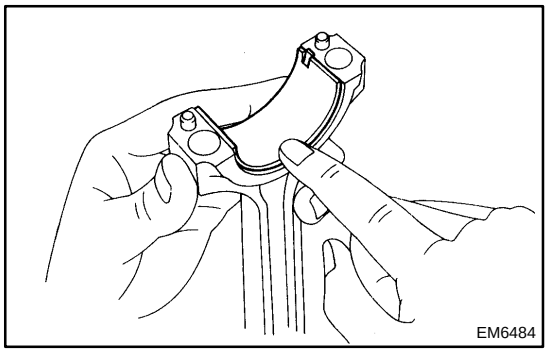

3. INSTALL BEARINGS

(a) Align the bearing claw with the groove of the connecting rod or connecting cap.

(b) Install the bearings in the connecting rod and connecting rod cap.

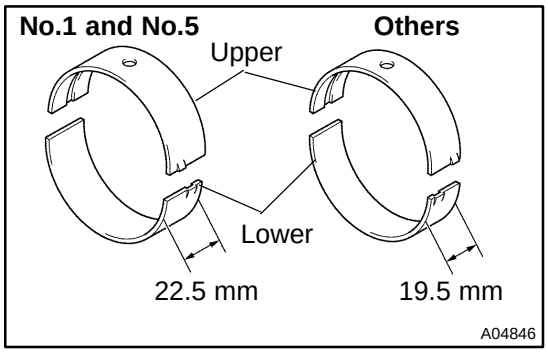

4. INSTALL MAIN BEARINGS

HINT:

- Main bearings are of 19.5 mm (0.768 in.) and 22.5 mm (0.886 in.) in width. Install the 22.5 mm (0.886 in.) bearings in the No.1 and No.5 cylinder block journal positions with the main bearing cap. Install the 19.5 mm (0.768 in.) bearings in the other positions.
- Upper bearings have an oil groove and oil holes, but lower bearings do not.

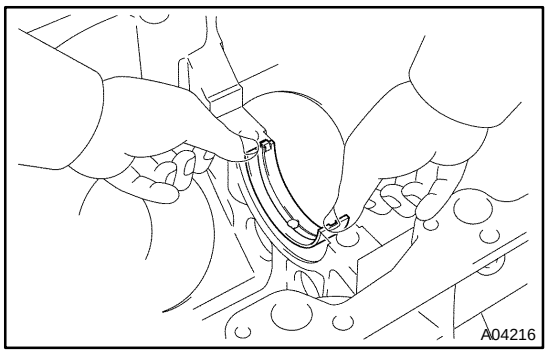

(a) Align the bearing claw with the claw groove of the cylinder block, and push in the 5 upper bearings.

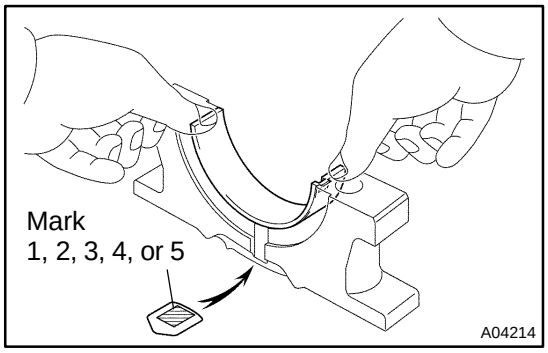

(b) Align the bearing claw with the claw groove of the main bearing cap, and push in the 5 lower bearings.

HINT:

A number is marked on each main bearing cap to indicate the installation position.

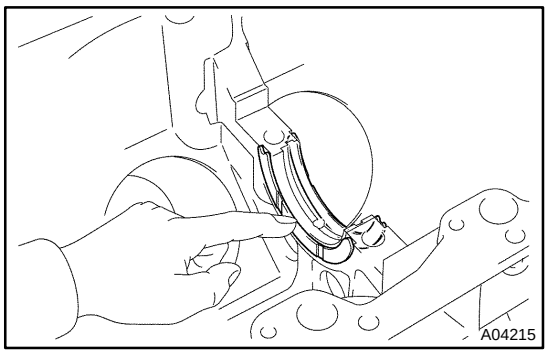

5. INSTALL UPPER THRUST WASHERS

Install the 2 thrust washers under the No.3 journal position of the cylinder block with the oil grooves facing outward.

6. PLACE CRANKSHAFT ON CYLINDER BLOCK

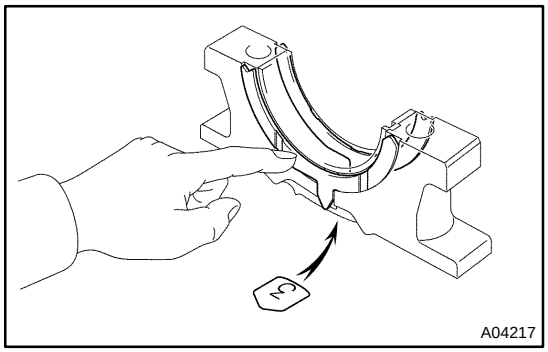

7. PLACE MAIN BEARING CAPS AND LOWER THRUST WASHERS ON CYLINDER BLOCK

(a) Install the 2 thrust washers on the No.3 bearing cap with the grooves facing outward.

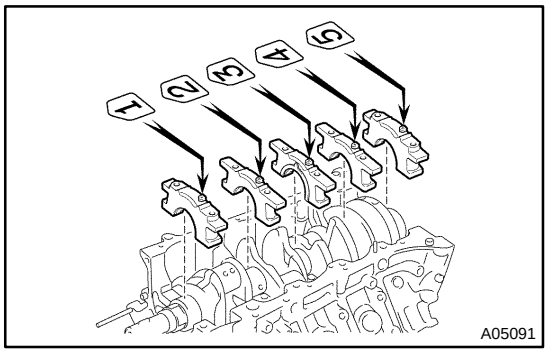

(b) Install the 5 main bearing caps in their proper locations.

8. INSTALL MAIN BEARING CAP BOLTS

HINT:

- The main bearing cap bolts are tightened in 2 progressive steps (steps (b) and (d)).
- If any one of the main bearing cap bolts is broken or deformed, replace it.

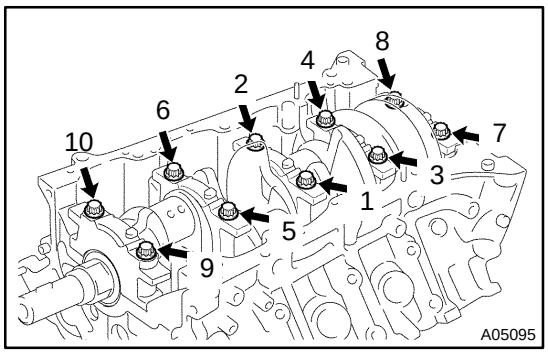

(a) Apply a light coat of engine oil to the threads and under the main bearing cap bolts.

(b) Install and uniformly tighten the 10 main bearing cap bolts in several steps, in the sequence shown.

Torque: 27 N·m (275 kgf·cm, 20 ft·lbf)

If any of the main bearing cap bolts does not meet the torque specification, replace the main bearing cap bolt.

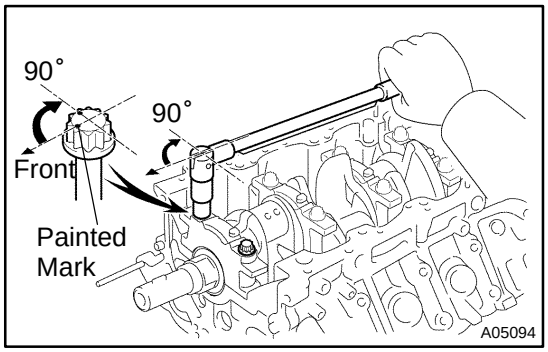

(c) Mark the front of the main bearing cap bolt with paint.

(d) Retighten the main bearing cap bolts by 90° in the numerical order shown.

(e) Check that the painted mark is now at a 90° angle to the front.

(f) Check that the crankshaft turns smoothly.

9. CHECK CRANKSHAFT THRUST CLEARANCE

(See page EM−100)

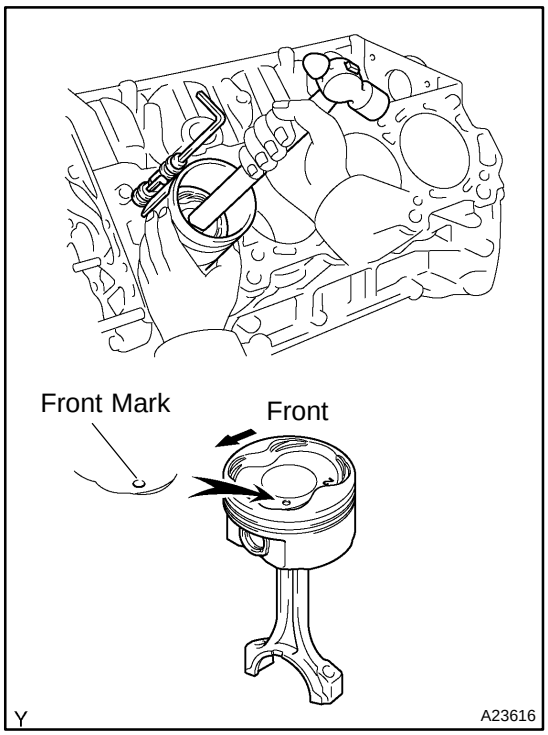

10. INSTALL PISTON AND CONNECTING ROD ASSEMBLIES

Using a piston ring compressor, push correctly the numbered piston and connecting rod assemblies into each cylinder with the front mark of the piston facing forward.

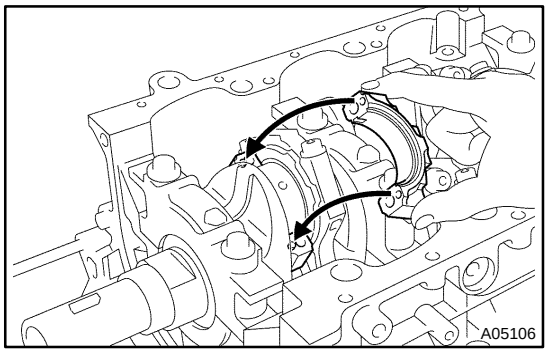

11. PLACE CONNECTING ROD CAP ON CONNECTING ROD

(a) Match the numbered connecting rod cap with the connecting rod.

(b) Align the pin groove of the connecting rod cap with the pins of the connecting rod, and install the connecting rod cap.

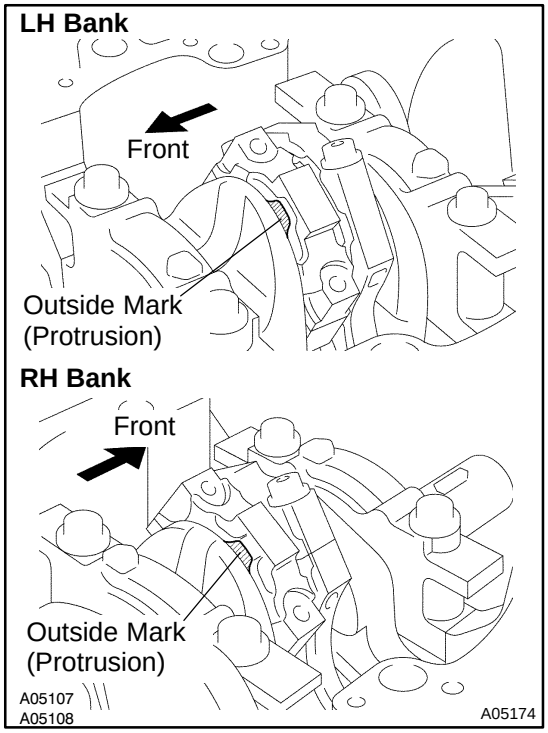

(c) Check that the outside mark of the connecting rod cap is facing in correct direction.

12. INSTALL CONNECTING ROD CAP BOLTS

HINT:

- The connecting rod cap bolts are tightened in 2 progressive steps (steps (b) and (d)).
- If any one of the connecting rod cap bolts is broken or deformed, replace it.

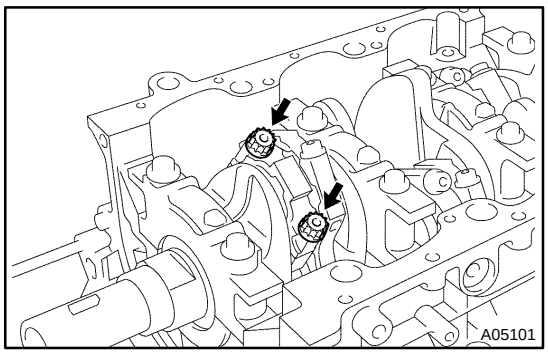

(a) Apply a light coat of engine oil on the threads and under the heads of the connecting rod cap bolts.
(b) Install and alternately tighten the 2 connecting rod cap bolts in several passes.
Torque: 24.5 N·m (250 kgf·cm, 18 ft·lbf)

If any one of the connecting rod cap bolts does not meet the torque specification, replace the connecting rod cap bolts.

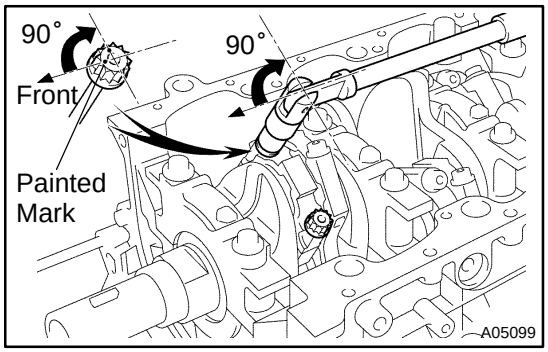

(c) Mark the front of the connecting cap bolt with paint.
(d) Retighten the cap bolts by 90° as shown.
(e) Check that the painted mark is now at a 90° angle to the front.
(f) Check that the crankshaft turns smoothly.

13. CHECK CONNECTING ROD THRUST CLEARANCE
(See page EM−100)

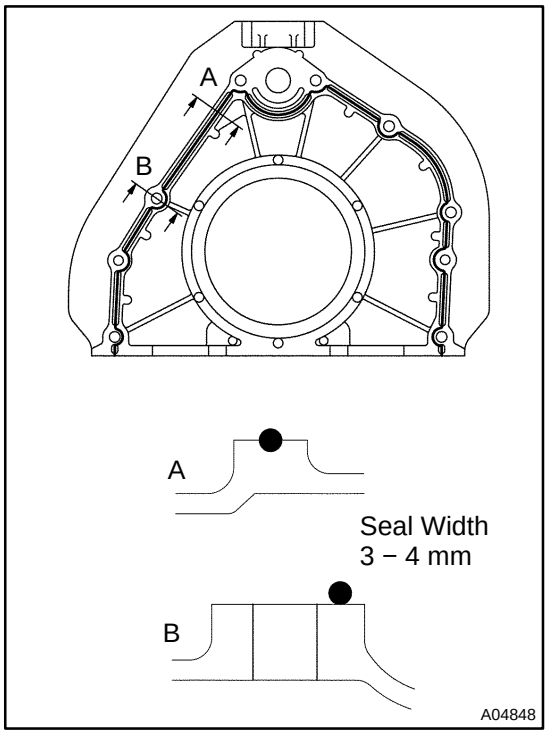

14. INSTALL REAR OIL SEAL RETAINER

(a) Remove any old packing (FIPG) material and be careful not to drop any oil on the contacting surfaces of the oil seal retainer and cylinder block.
- Using a razor blade and gasket scraper, remove all the old packing (FIPG) materials from the gasket surfaces and sealing grooves.
- Thoroughly clean all components to remove all the loose material.
- Using a non−residue solvent, clean both sealing surfaces.

(b) Apply seal packing to the oil seal retainer as shown in the illustration.
Seal packing: Part No. 08826−00080 or equivalent
- Install a nozzle that has been cut to a 3 − 4 mm (0.12 − 0.16 in.) opening.
- Parts must be assembled within 5 minutes of application. Otherwise the material must be removed and reapplied.
- Immediately remove nozzle from the tube and reinstall cap.

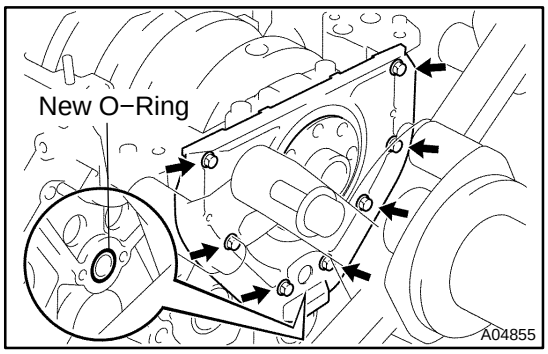

(c) Install a new O−ring to the cylinder block.
(d) Install the oil seal retainer with the 7 bolts.
Torque: 8.0 N·m (80 kgf·cm, 71 in.·lbf)

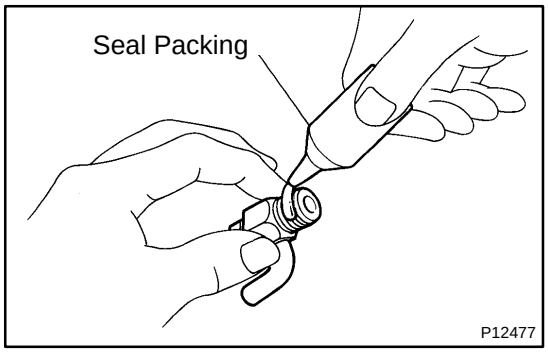

15. INSTALL ENGINE COOLANT DRAIN UNIONS
(a) Apply seal packing to 2 or 3 threads.
Seal packing: Part No. 08826−00100 or equivalent

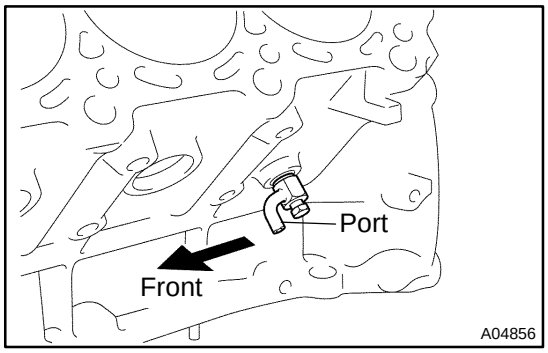

(b) Install the 2 drain unions.
Torque: 49 N·m (500 kgf·cm, 36 ft·lbf)

HINT:
After applying the specified torque, rotate the drain union clockwise until its drain port is facing forward.

16. INSTALL OIL PUMP (See page LU−15)
17. INSTALL OIL STRAINER (See page LU−15)
18. INSTALL NO.1 OIL PAN (See page LU−15)
19. INSTALL OIL PAN BAFFLE PLATE (See page LU−15)
20. INSTALL NO.2 OIL PAN (See page LU−15)
21. INSTALL WATER PUMP (See page CO−8)
22. INSTALL ENGINE MOUNTING BRACKETS
Install the mounting bracket with the 4 bolts. Install the 2 mounting brackets.
Torque: 36 N·m (370 kgf·cm, 27 ft·lbf)

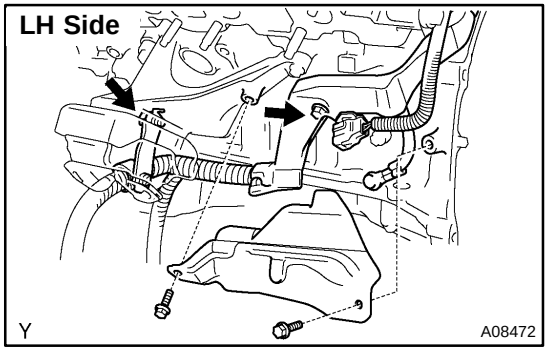

23. INSTALL ENGINE WIRE TO LH SIDE OF CYLINDER BLOCK
(a) Install the brackets on the engine wire with the 2 bolts.
(b) Install the engine wire cover with the 2 bolts.
24. INSTALL OIL COOLER PIPE BRACKET FOR A/T
Install the bracket with the bolt.
25. INSTALL VVT SENSORS (See page SF−79)
26. INSTALL KNOCK SENSORS (See page SF−70)
27. INSTALL STARTER (See page ST−19)

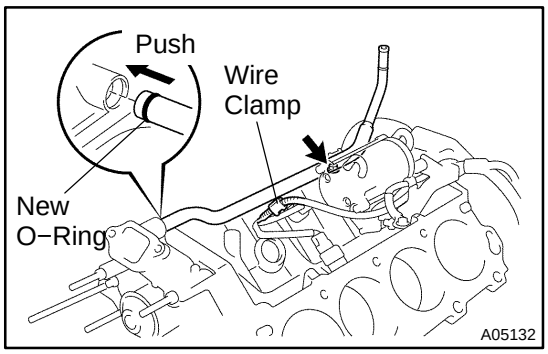

28. INSTALL WATER BYPASS PIPE

(a) Install a new O−ring to the water bypass pipe.

(b) Apply soapy water to the O−ring.

(c) Push in the water bypass pipe end into the pipe hole of the water pump.

(d) Install the water bypass pipe with the bolt.
Torque: 18 N·m (185 kgf·cm, 13 ft·lbf)

(e) Install the wire clamp to the bracket of the water bypass pipe.

29. INSTALL CYLINDER HEADS (See page EM−60)

30. INSTALL TIMING BELT AND PULLEYS (See page EM−23)

31. DISCONNECT ENGINE FROM ENGINE STAND

EM123−05

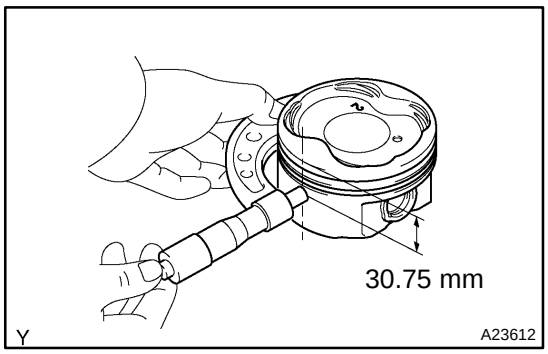

REPLACEMENT

1. REPLACE OVERSIZED (O/S) PISTONS FOR CYLINDER BORING

HINT:

- Bore all the 8 cylinders to match the oversized piston outside diameter.
- Replace all the piston rings with ones to match the oversized pistons.

(a) Keep 8 new oversized pistons.
O/S 0.50 piston diameter:
94.392 to 94.440 mm (3.7162 to 3.7181 in.)

(b) Using a micrometer, measure the piston diameter at right angles to the piston pin center line, 30.75 mm (1.2106 in.) from the piston head.

(c) Calculate the size to be rebored for each cylinder as follows:
Size to be rebored = P + C − H
P = Piston diameter
C = Piston clearance:
0.030 to 0.071 mm (0.0012 to 0.0028 in.)
H = Allowance for honing: 0.02 mm (0.0008 in.) or less

(d) Bore and hone the cylinders to calculated dimensions.
Maximum honing: 0.02 mm (0.0008 in.)

NOTICE:
Excess honing will destroy the finished roundness.

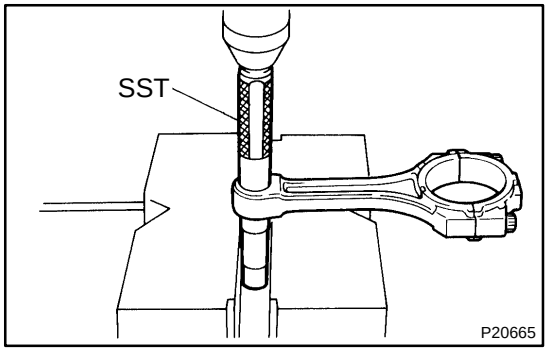

2. REPLACE CONNECTING ROD BUSHINGS

(a) Using SST and a press, press out the bushing.
SST 09222−30010

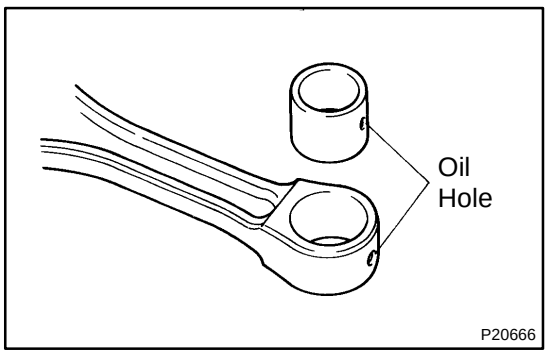

(b) Align the oil holes of a new bushing and the connecting rod.

(c) Using SST and a press, press in the bushing.
SST 09222−30010

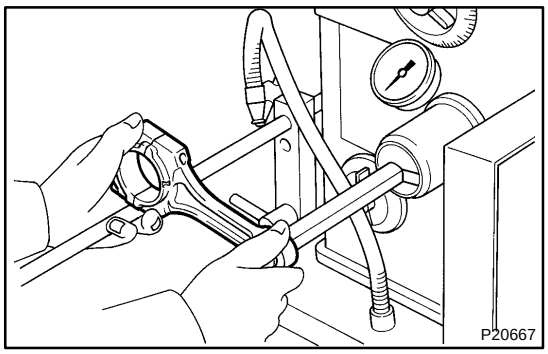

(d) Using a pin hole grinder, hone the bushing to obtain the standard specified clearance (See page EM−100) between the bushing and piston pin.

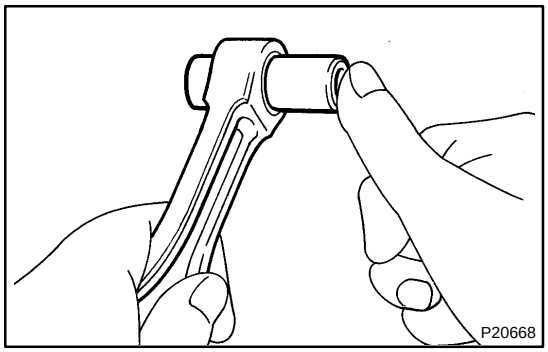

(e) Check the piston pin fit at normal room temperature. Coat the piston pin with engine oil, and push it into the connecting rod with your thumb.

3. REPLACE CRANKSHAFT FRONT OIL SEAL (See page LU−13)

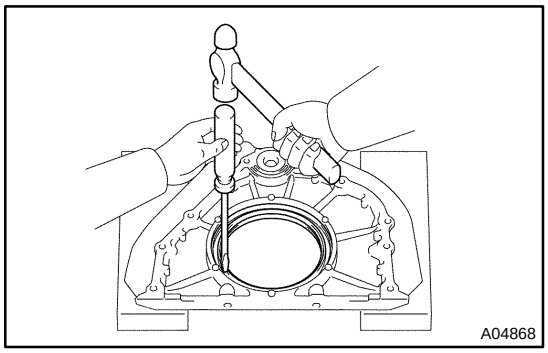

4. REPLACE CRANKSHAFT REAR OIL SEAL

HINT:

There are 2 methods ((a) and (b)) to replace the oil seal.

(a) If the rear oil seal retainer is removed from the cylinder block:

(1) Using a screwdriver and hammer, tap out the oil seal.

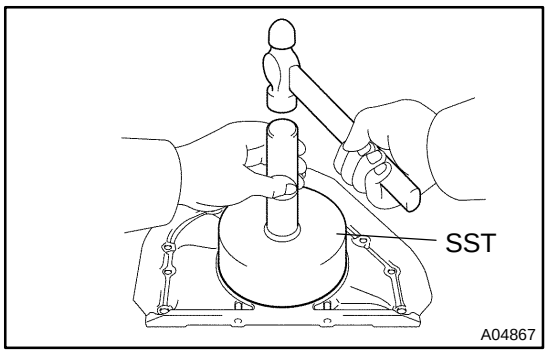

(2) Using SST and a hammer, tap in a new oil seal until its surface is flush with the rear oil seal retainer edge.

SST 09223−56010

(3) Apply MP grease to the oil seal lip.

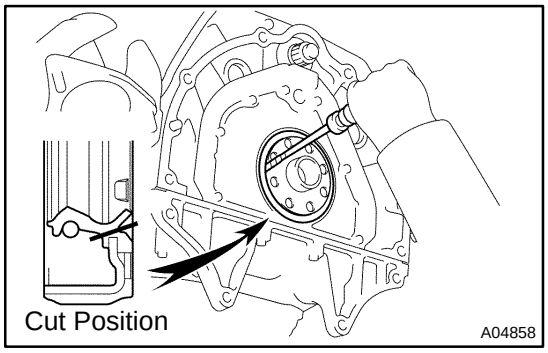

(b) If the rear oil seal retainer is installed to the cylinder block:

(1) Using a knife, cut off the oil seal lip.

(2) Using a screwdriver, pry out the oil seal.

NOTICE:

Be careful not to damage the crankshaft. Tape the screwdriver tip.

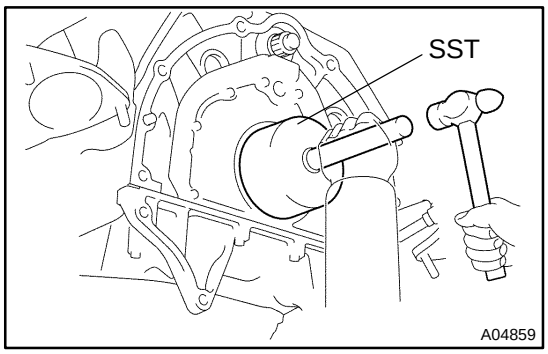

(3) Apply MP grease to a new oil seal lip.
(4) Using SST and a hammer, tap in the oil seal until its surface is flush with the rear oil seal retainer edge.

SST 09223−56010

CYLINDER HEAD

EM1WZ−02

COMPONENTS

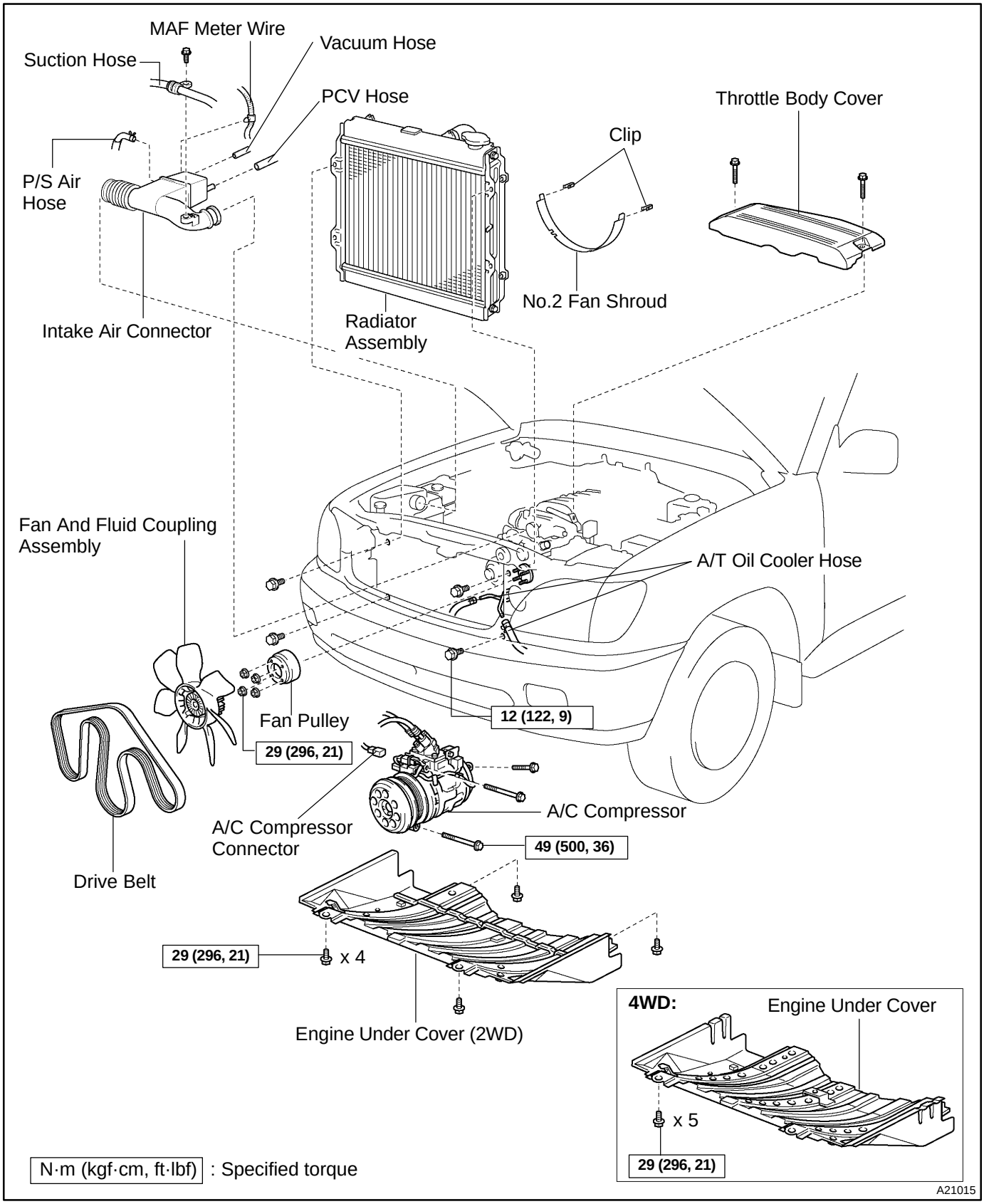

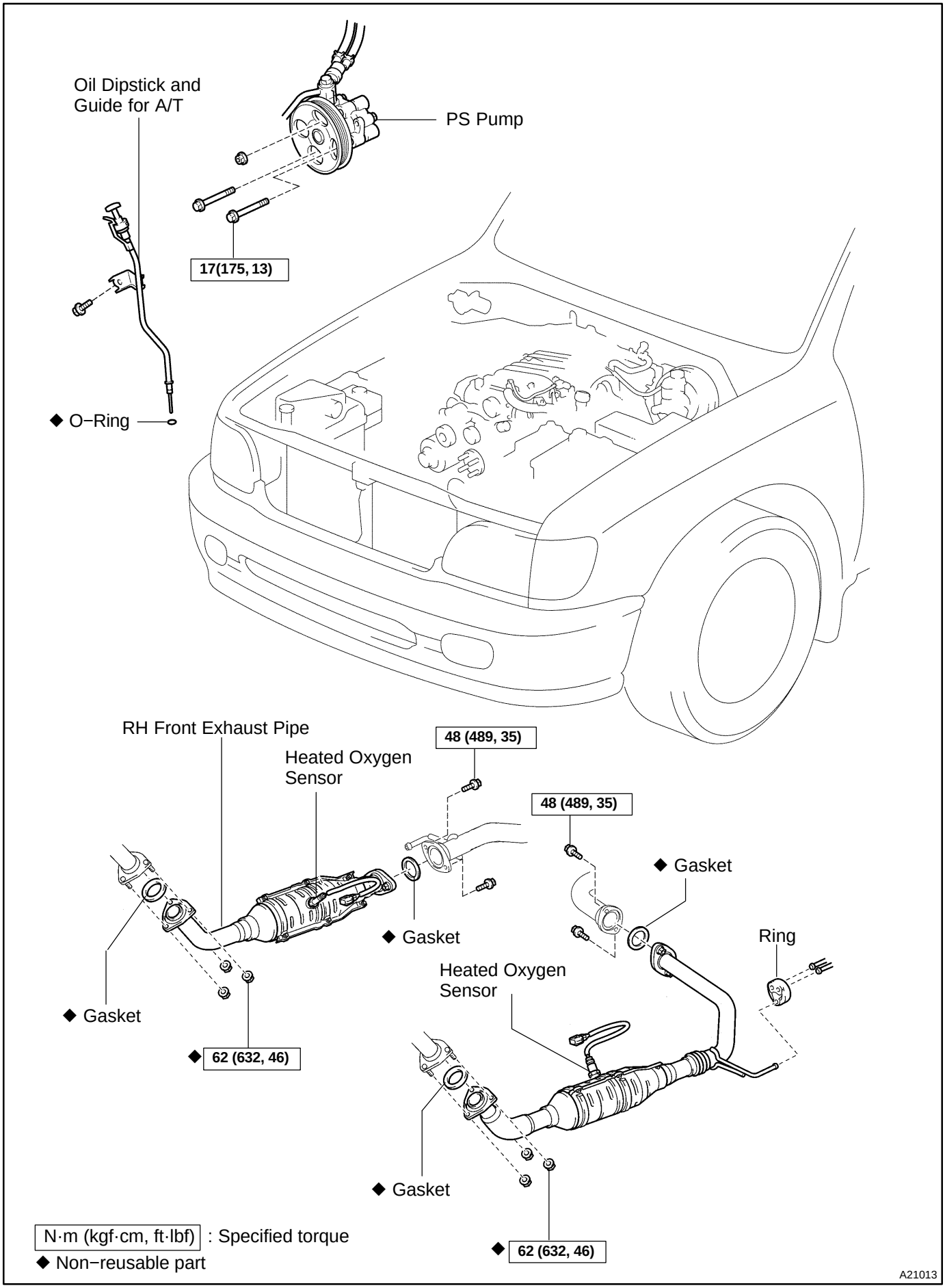
Oil Dipstick and Guide for A/T
PS Pump
17(175, 13)
◆ O−Ring
RH Front Exhaust Pipe
Heated Oxygen Sensor
48 (489, 35)
48 (489, 35)
◆ Gasket
◆ Gasket
Ring
Heated Oxygen Sensor
◆ Gasket
◆ 62 (632, 46)
◆ Gasket
◆ 62 (632, 46)
N·m (kgf·cm, ft·lbf) : Specified torque
◆ Non−reusable part
A21013

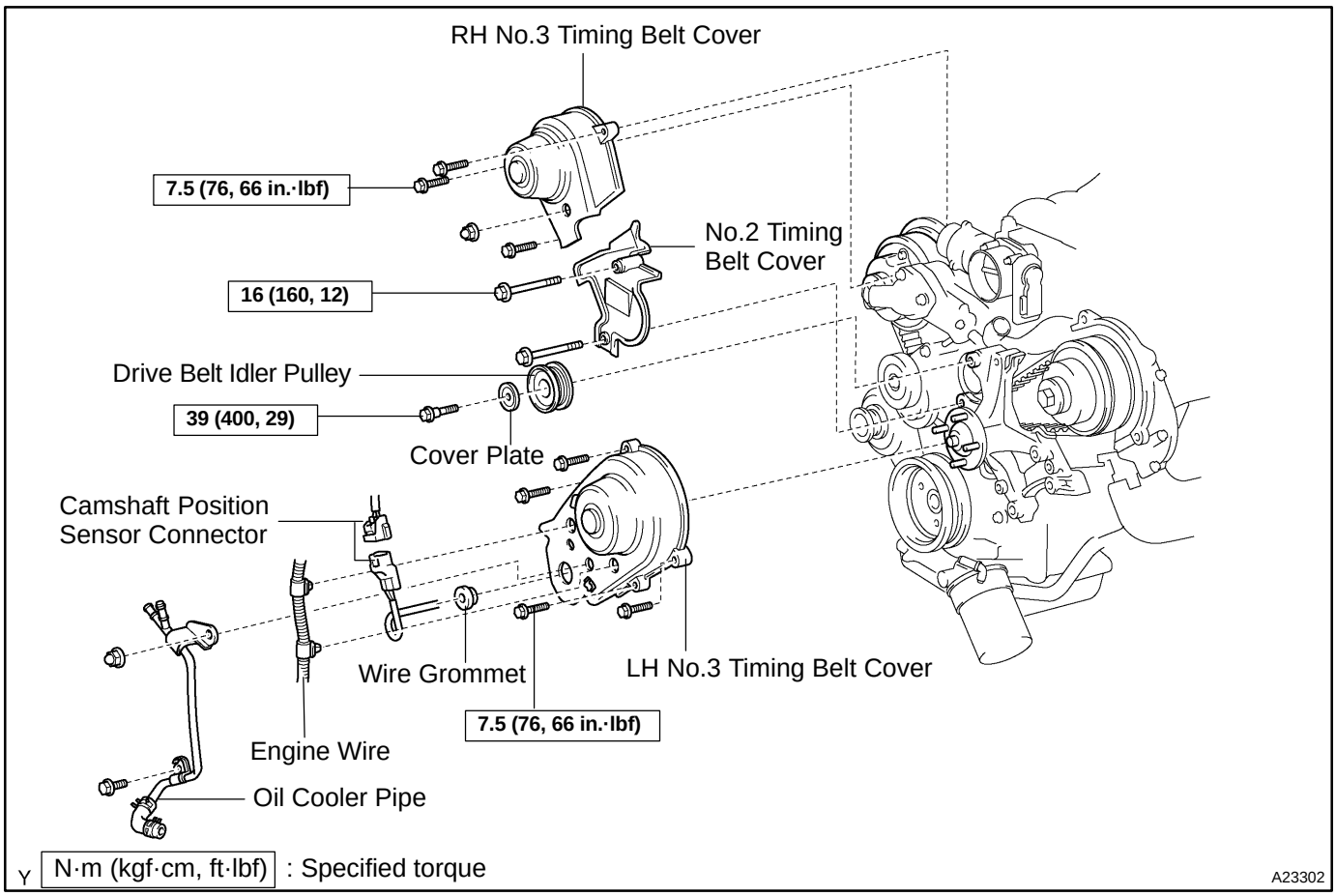
RH No.3 Timing Belt Cover
7.5 (76, 66 in.·lbf)
No.2 Timing Belt Cover
16 (160, 12)
Drive Belt Idler Pulley
39 (400, 29)
Cover Plate
Camshaft Position Sensor Connector
Wire Grommet
LH No.3 Timing Belt Cover
7.5 (76, 66 in.·lbf)
Engine Wire
Oil Cooler Pipe
Y N·m (kgf·cm, ft·lbf) : Specified torque
A23302

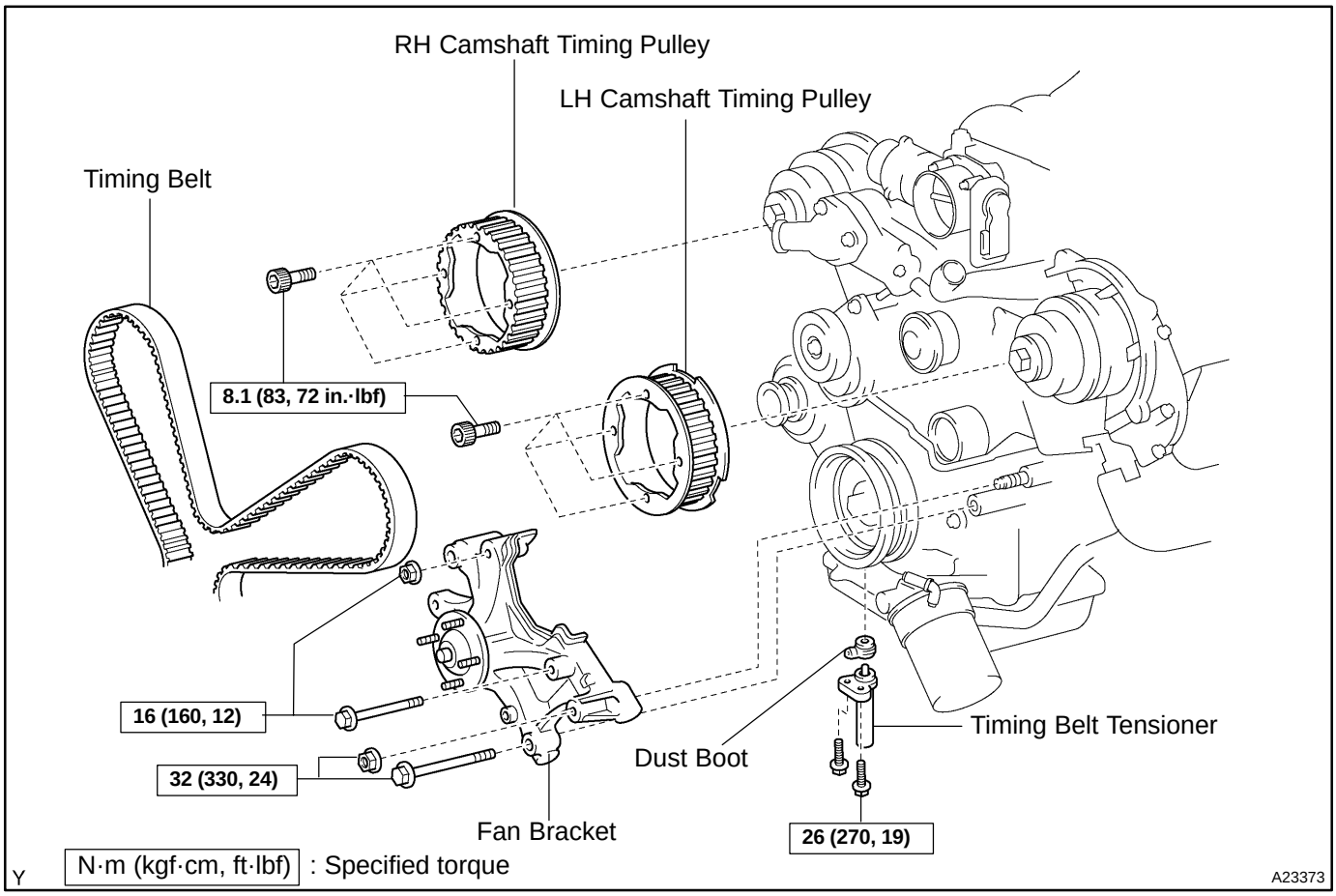
RH Camshaft Timing Pulley
LH Camshaft Timing Pulley
Timing Belt
8.1 (83, 72 in.·lbf)
16 (160, 12)
32 (330, 24)
Fan Bracket
Dust Boot
Timing Belt Tensioner
26 (270, 19)
Y N·m (kgf·cm, ft·lbf) : Specified torque
A23373

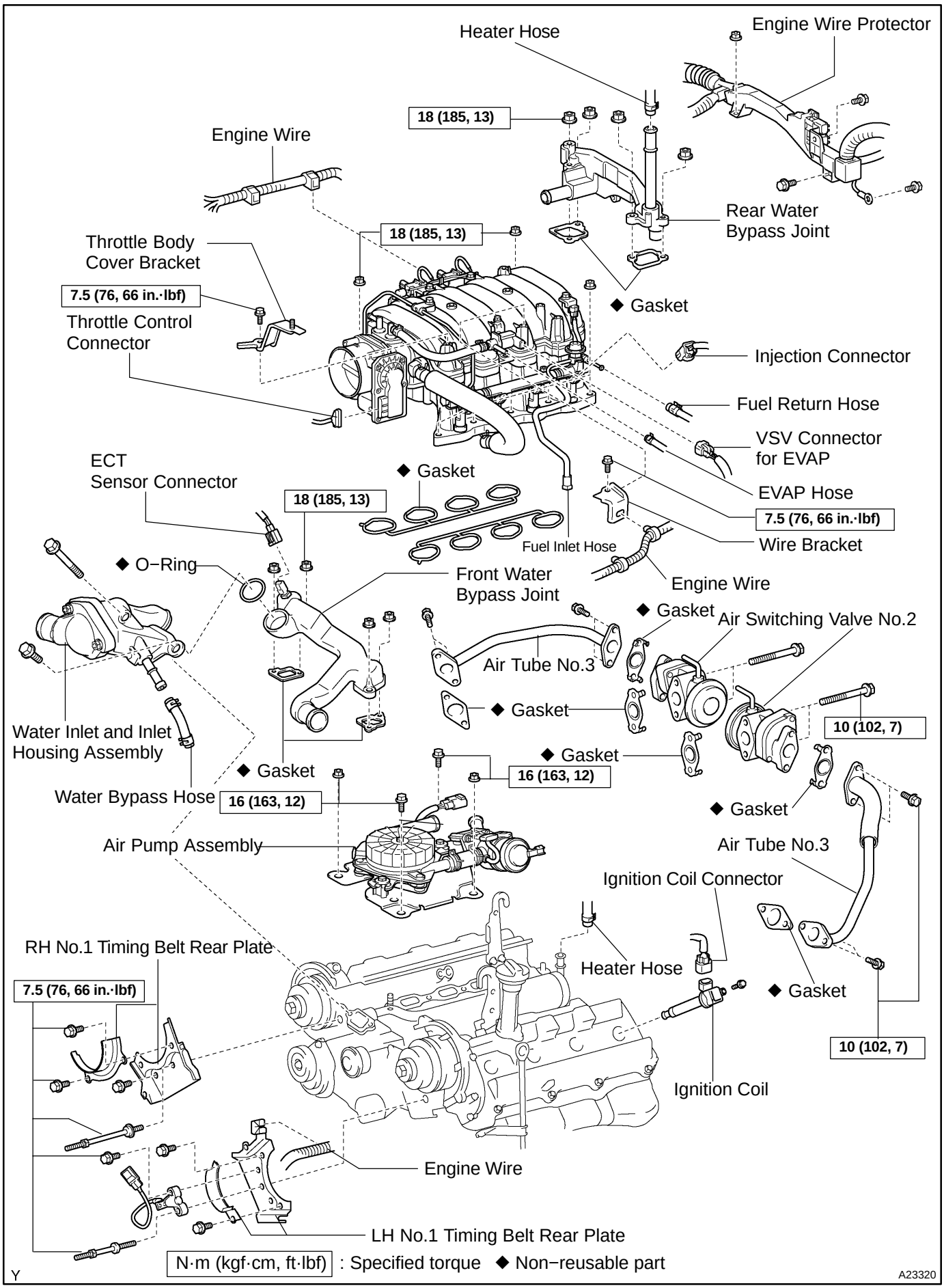
Heater Hose
Engine Wire Protector
18 (185, 13)
Engine Wire
Rear Water Bypass Joint
18 (185, 13)
Throttle Body Cover Bracket
7.5 (76, 66 in.·lbf)
Throttle Control Connector
◆ Gasket
Injection Connector
Fuel Return Hose
VSV Connector for EVAP
ECT Sensor Connector
◆ Gasket
EVAP Hose
18 (185, 13)
7.5 (76, 66 in.·lbf)
Fuel Inlet Hose
Wire Bracket
◆ O−Ring
Front Water Bypass Joint
Engine Wire
◆ Gasket
Air Switching Valve No.2
Air Tube No.3
◆ Gasket
10 (102, 7)
Water Inlet and Inlet Housing Assembly
◆ Gasket
16 (163, 12)
◆ Gasket
Water Bypass Hose
16 (163, 12)
◆ Gasket
Air Pump Assembly
Air Tube No.3
Ignition Coil Connector
RH No.1 Timing Belt Rear Plate
Heater Hose
7.5 (76, 66 in.·lbf)
◆ Gasket
10 (102, 7)
Ignition Coil
Engine Wire
LH No.1 Timing Belt Rear Plate
N·m (kgf·cm, ft·lbf) : Specified torque ◆ Non−reusable part
Y
A23320

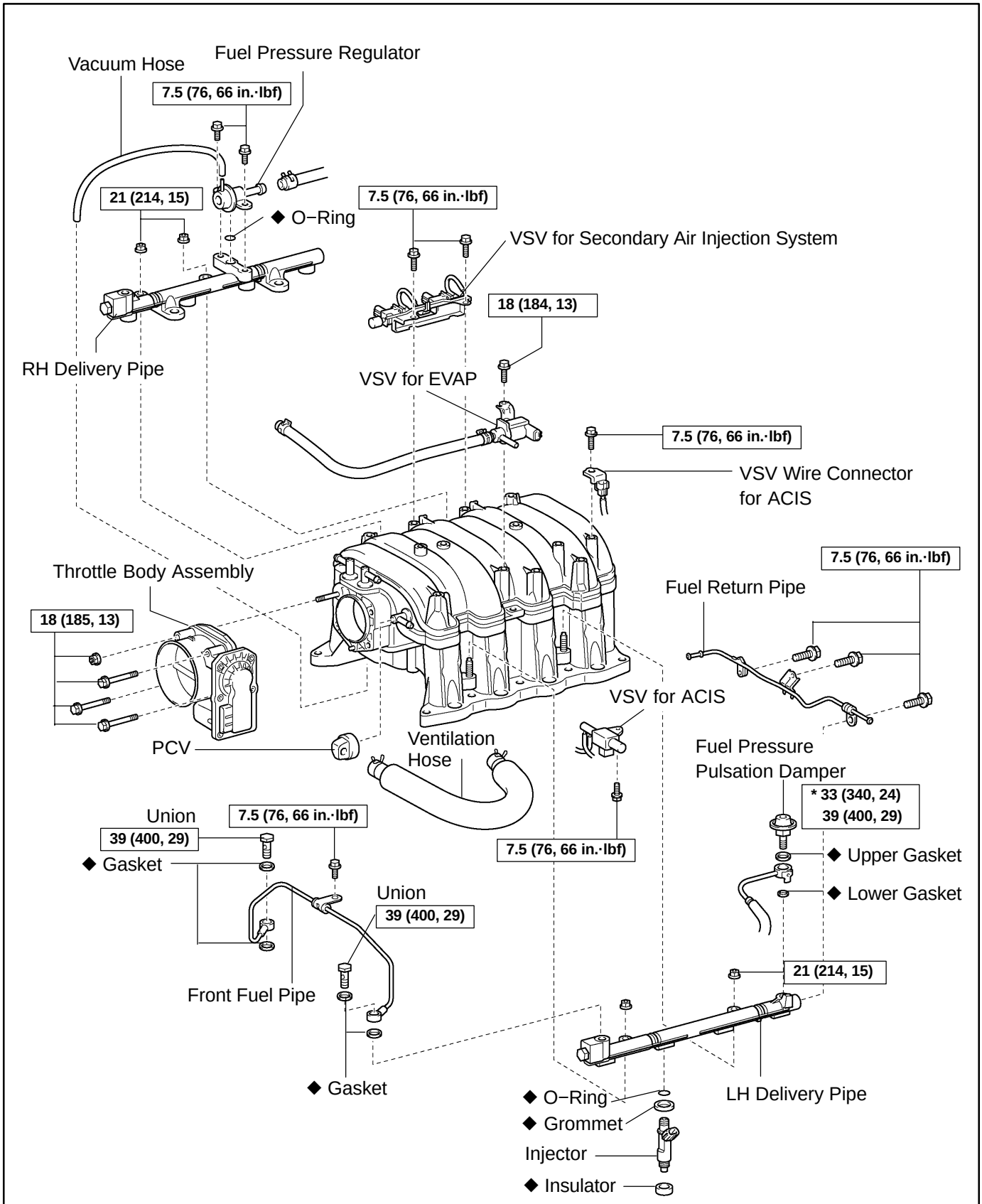

N·m (kgf·cm, ft·lbf) : Specified torque
◆ Non−reusable part
* For use with SST

Y

A23321

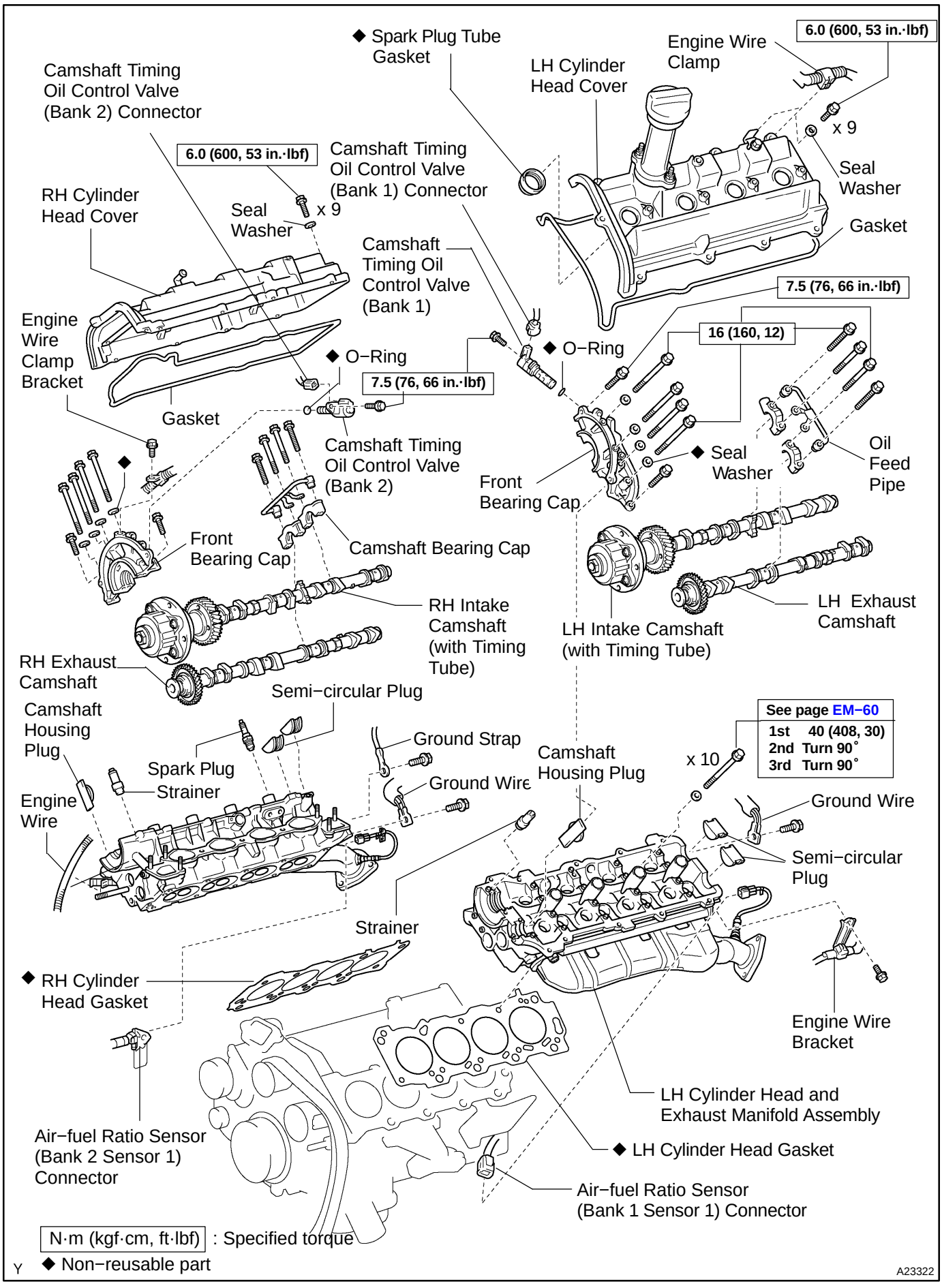
◆ Spark Plug Tube Gasket
Engine Wire Clamp
6.0 (600, 53 in.·lbf)
LH Cylinder Head Cover
Camshaft Timing Oil Control Valve (Bank 2) Connector
6.0 (600, 53 in.·lbf)
Camshaft Timing Oil Control Valve (Bank 1) Connector
x 9
Seal Washer
RH Cylinder Head Cover
Seal Washer
x 9
Gasket
Camshaft Timing Oil Control Valve (Bank 1)
7.5 (76, 66 in.·lbf)
16 (160, 12)
Engine Wire Clamp Bracket
◆ O−Ring
◆ O−Ring
7.5 (76, 66 in.·lbf)
Gasket
Camshaft Timing Oil Control Valve (Bank 2)
◆ Seal Washer
Oil Feed Pipe
Front Bearing Cap
Front Bearing Cap
Camshaft Bearing Cap
RH Intake Camshaft (with Timing Tube)
LH Intake Camshaft (with Timing Tube)
LH Exhaust Camshaft
RH Exhaust Camshaft
Semi−circular Plug
Camshaft Housing Plug
See page EM−60
1st 40 (408, 30)
2nd Turn 90°
3rd Turn 90°
Ground Strap
Spark Plug
Strainer
Ground Wire
Camshaft Housing Plug
x 10
Engine Wire
Ground Wire
Semi−circular Plug
Strainer
◆ RH Cylinder Head Gasket
Engine Wire Bracket
LH Cylinder Head and Exhaust Manifold Assembly
Air−fuel Ratio Sensor (Bank 2 Sensor 1) Connector
◆ LH Cylinder Head Gasket
Air−fuel Ratio Sensor (Bank 1 Sensor 1) Connector
N·m (kgf·cm, ft·lbf) : Specified torque
◆ Non−reusable part
A23322

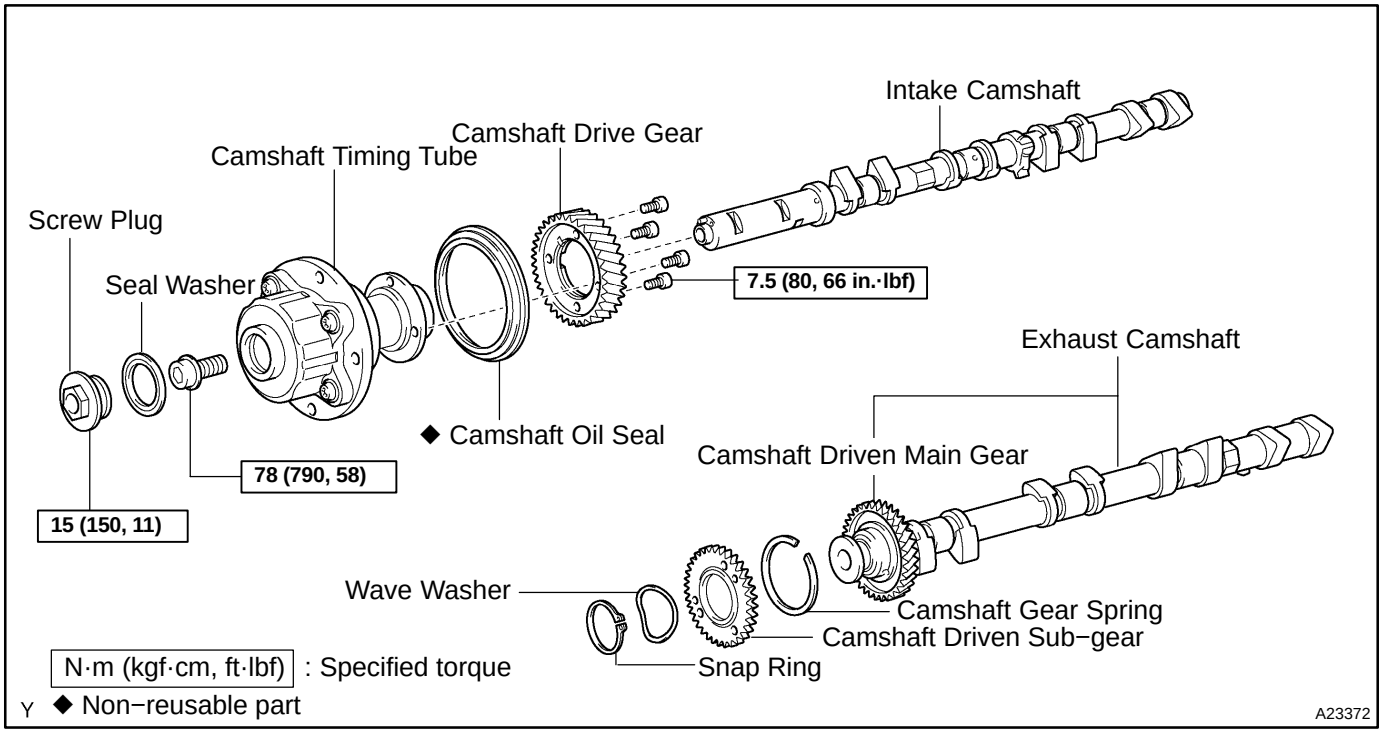
Intake Camshaft
Camshaft Drive Gear
Camshaft Timing Tube
Screw Plug
Seal Washer
7.5 (80, 66 in.·lbf)
Exhaust Camshaft
◆ Camshaft Oil Seal
Camshaft Driven Main Gear
78 (790, 58)
15 (150, 11)
Wave Washer
Camshaft Gear Spring
Camshaft Driven Sub−gear
Snap Ring
N·m (kgf·cm, ft·lbf) : Specified torque
◆ Non−reusable part
A23372

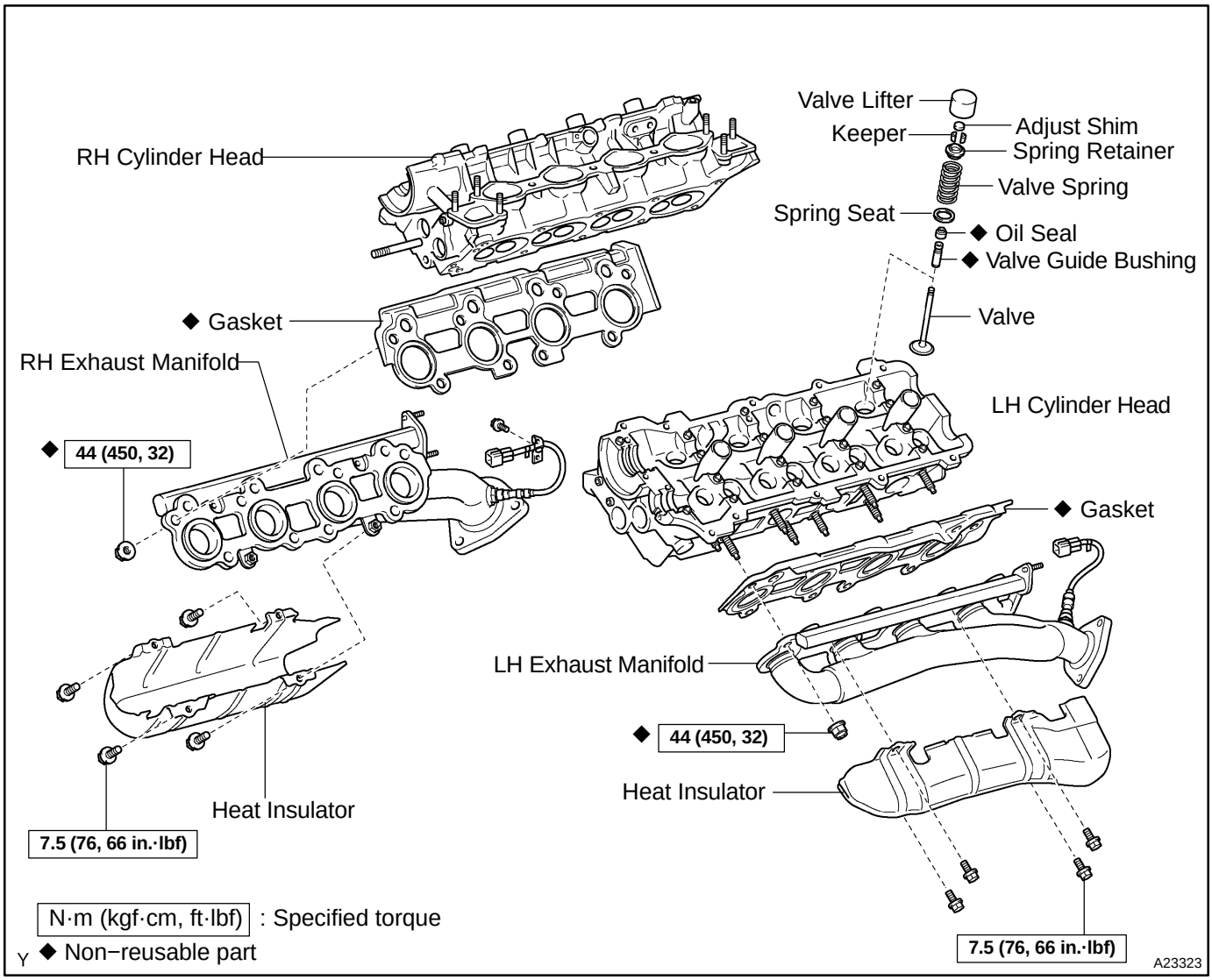
Valve Lifter
Keeper
Adjust Shim
Spring Retainer
Valve Spring
Spring Seat
◆ Oil Seal
◆ Valve Guide Bushing
RH Cylinder Head
◆ Gasket
Valve
RH Exhaust Manifold
LH Cylinder Head
◆ 44 (450, 32)
◆ Gasket
LH Exhaust Manifold
◆ 44 (450, 32)
Heat Insulator
Heat Insulator
7.5 (76, 66 in.·lbf)
7.5 (76, 66 in.·lbf)
N·m (kgf·cm, ft·lbf) : Specified torque
◆ Non−reusable part
A23323

EM0L1−09

DISASSEMBLY

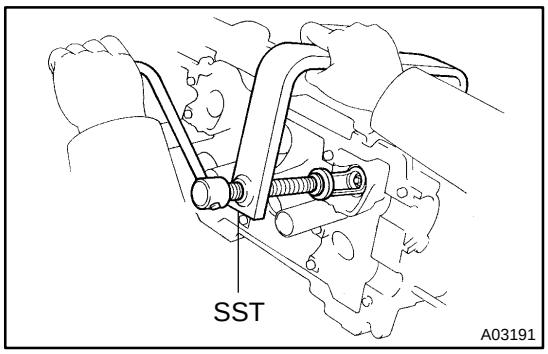

1. REMOVE VALVE LIFTERS AND SHIMS

HINT:

Arrange the valve lifters and shims in correct order.

2. REMOVE VALVES

(a) Using SST, compress the valve spring and remove the 2 keepers.

SST 09202−70020 (09202−00010)

(b) Remove the spring retainer, the valve spring, the valve and the spring seat.

HINT:

Arrange the valves, valve springs, spring seats and spring retainers incorrect order.

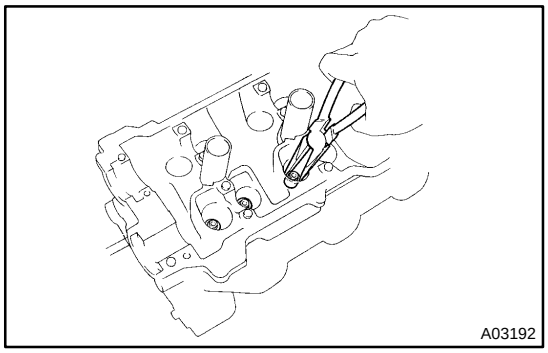

(c) Using needle−nose pliers, remove the oil seal.

EM1X1−02

INSPECTION

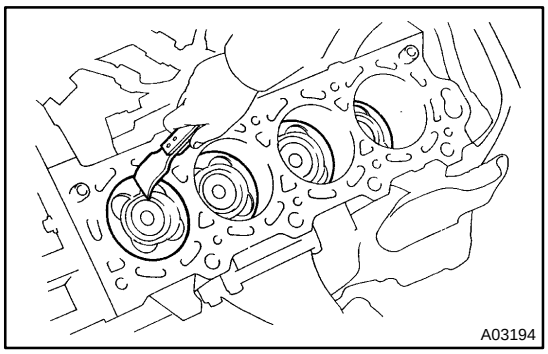

1. CLEAN TOP SURFACES OF PISTONS AND CYLINDER BLOCK

(a) Turn the crankshaft, and bring each piston to top dead center (TDC). Using a gasket scraper, remove all the carbon from the piston top surface.

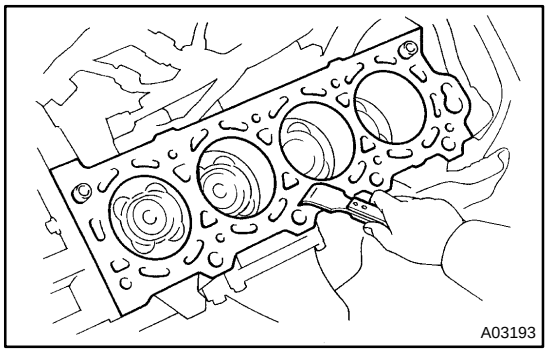

(b) Using a surface contacting gasket scraper, remove all the gasket materials from the cylinder block.

(c) Using compressed air, blow carbon and oil from the bolt holes.

CAUTION:
Protect your eyes when using high pressure compressed air.

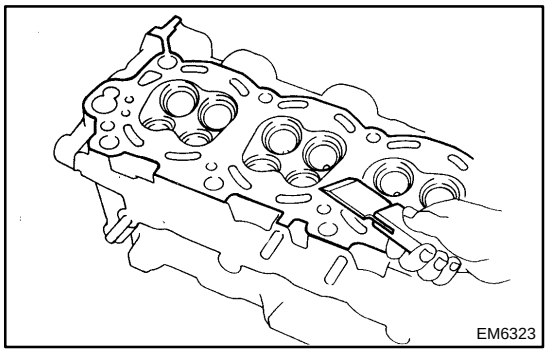

2. REMOVE GASKET MATERIAL

Using a gasket scraper, remove all the gasket material from the cylinder block contact surface.

NOTICE:
Be careful not to scratch the surface contacting the cylinder block.

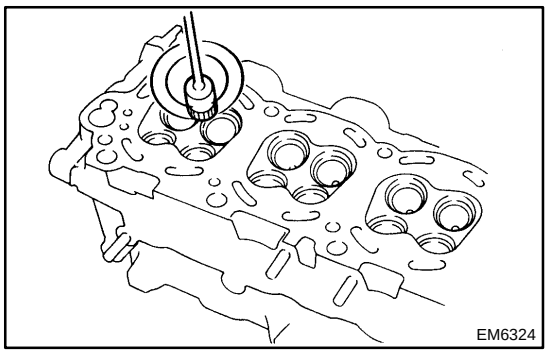

3. CLEAN COMBUSTION CHAMBERS

Using a wire brush, remove all the carbon from the combustion chambers.

NOTICE:
Be careful not to scratch the surface contacting the cylinder block.

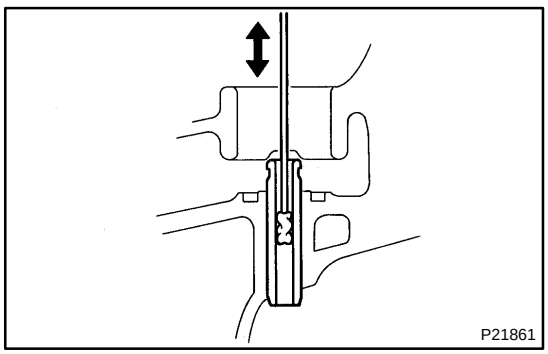

4. CLEAN VALVE GUIDE BUSHINGS

Using a valve guide bushing brush and solvent, clean all the guide bushings.

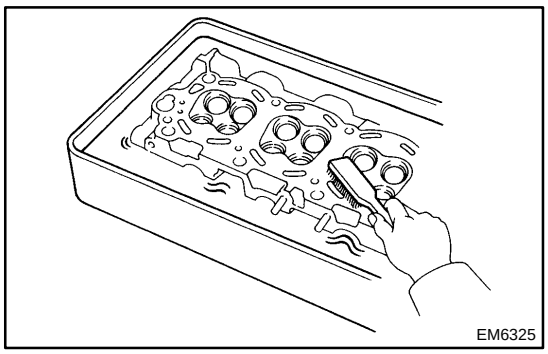

5. CLEAN CYLINDER HEAD

Using a soft brush and solvent, thoroughly clean the cylinder head.

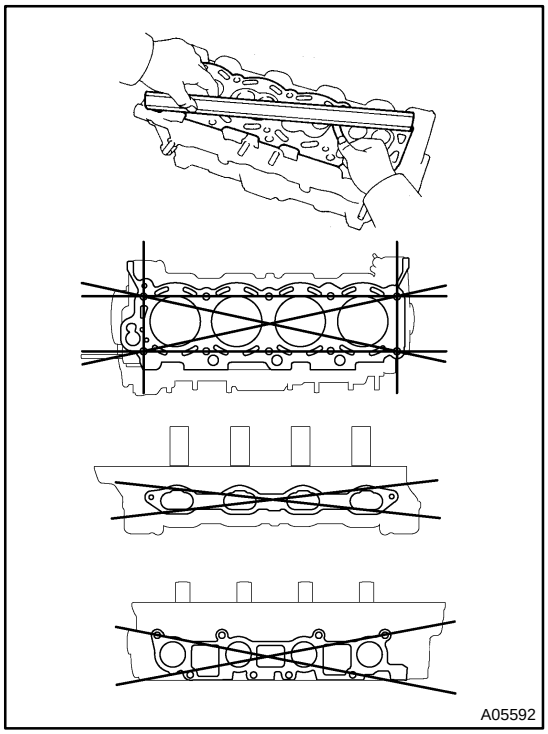

6. INSPECT FOR FLATNESS

Using a precision straight edge and feeler gauge, measure the surfaces contacting the cylinder block and the manifolds for warpage.

Maximum warpage: 0.10 mm (0.0039 in.)

If warpage is greater than maximum, replace the cylinder head.

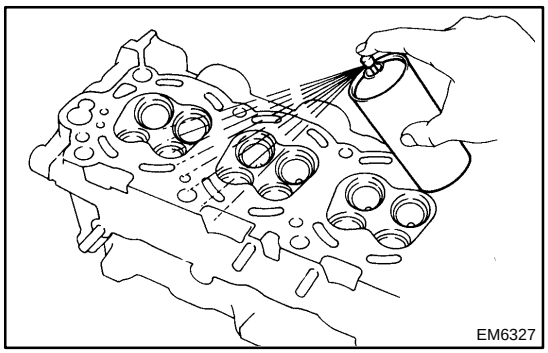

7. INSPECT FOR CRACKS

Using a dye penetrate, check the combustion chamber, intake ports, exhaust ports and cylinder block surface for cracks.

If cracked, replace the cylinder head.

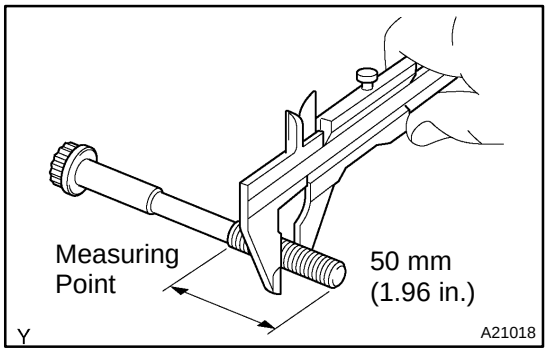

8. INSPECT CYLINDER HEAD BOLT

Using vernier calipers, measure the thread outside diameter of the cylinder head bolt.

Standard outside diameter:
9.810 to 9.960 mm (0.3862 to 0.3921 in.)

Minimum outside diameter: 9.70 mm (0.3819 in.)

If the diameter is less than minimum, replace the bolt.

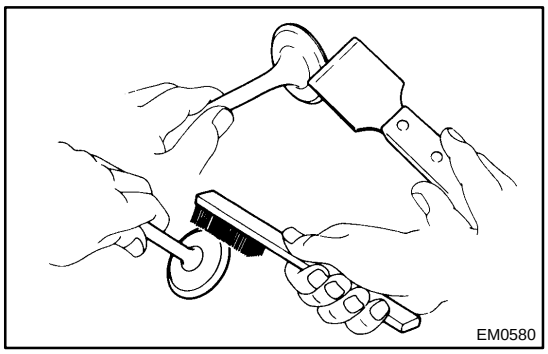
EM0580

9. CLEAN VALVES

(a) Using a gasket scraper, chip off any carbon from the valve head.

(b) Using a wire brush, thoroughly clean the valve.

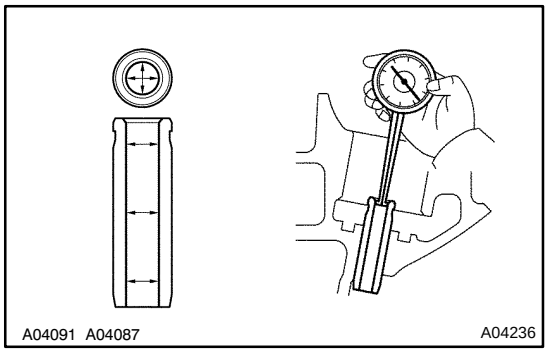
A04091 A04087 A04236

10. INSPECT VALVE STEMS AND GUIDE BUSHINGS

(a) Using a caliper gauge, measure the inside diameter of the guide bushing.

Bushing inside diameter:
5.510 to 5.530 mm (0.2169 to 0.2177 in.)

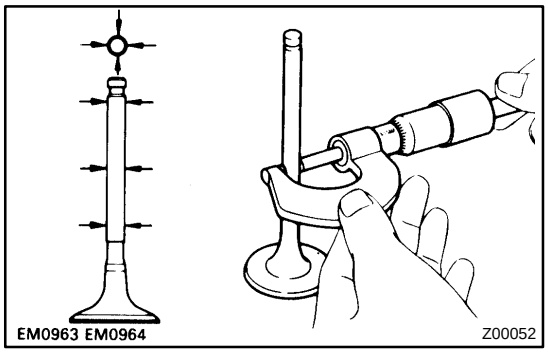
EM0963 EM0964 Z00052

(b) Using a micrometer, measure the diameter of the valve stem.

Valve stem diameter:

Intake	5.470 to 5.485 mm (0.2154 to 0.2159 in.)
Exhaust	5.465 to 5.480 mm (0.2152 to 0.2157 in.)

(c) Subtract the valve stem diameter measurement from the guide bushing inside diameter measurement.

Standard oil clearance:

Intake	0.025 to 0.060 mm (0.0010 to 0.0024 in.)
Exhaust	0.030 to 0.065 mm (0.0012 to 0.0026 in.)

Maximum oil clearance:

Intake	0.08 mm (0.0031 in.)
Exhaust	0.10 mm (0.0039 in.)

If the clearance is greater than maximum, replace the valve and guide bushing. (See page EM−56)

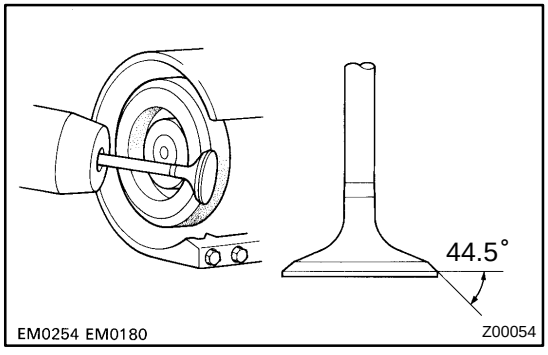

EM0254 EM0180 Z00054

11. INSPECT AND GRIND VALVES

(a) Grind the valve enough to remove pits and carbon.

(b) Check that the valve is ground to the correct valve face angle.

Valve face angle: 44.5˚

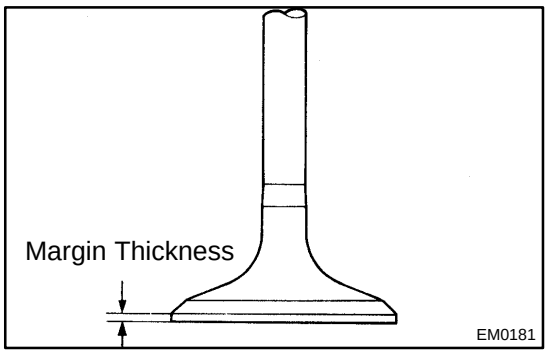

(c) Check the valve head margin thickness.
Standard margin thickness: 1.0 mm (0.039 in.)
Minimum margin thickness: 0.5 mm (0.020 in.)
If the margin thickness is less than minimum, replace the valve.

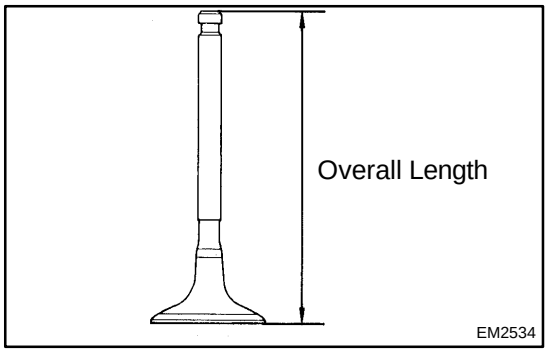

(d) Check the valve overall length.
Standard overall length:

Intake	95.05 mm (3.7421 in.)
Exhaust	95.10 mm (3.7441 in.)

Minimum overall length:

Intake	94.55 mm (3.7224 in.)
Exhaust	94.60 mm (3.7244 in.)

If the overall length is less than minimum, replace the valve.

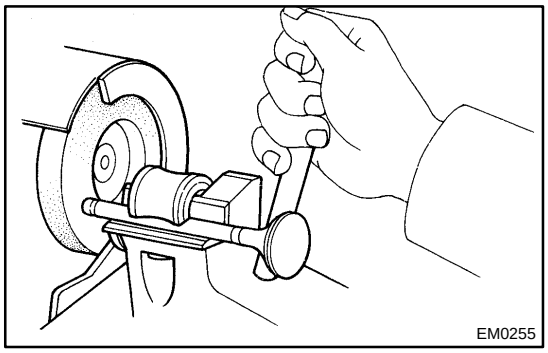

(e) Check the surface of the valve stem tip for wear.
If the valve stem tip is worn, resurface the tip with a grinder or replace the valve.
NOTICE:
Do not grind off more than minimum.

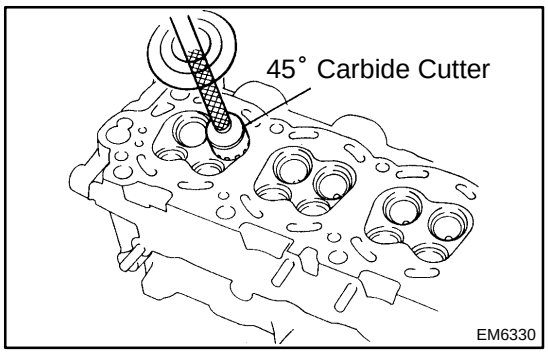

12. INSPECT AND CLEAN VALVE SEATS

(a) Using a 45° carbide cutter, resurface the valve seats. Remove only metal enough to clean the seats.

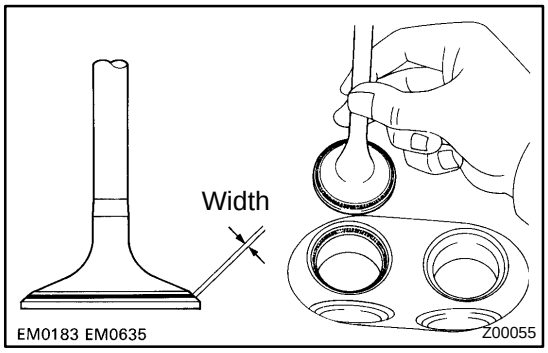

(b) Check the valve seating position.
Apply a light coat of Prussian blue (or white lead) to the valve face. Lightly press the valve against the seat. Do not rotate the valve.

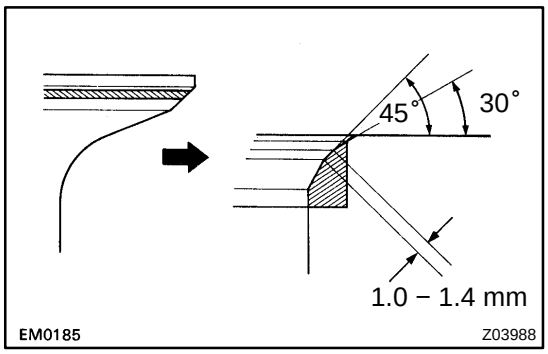

(c) Check the valve face and seat for the following:
- If blue appears 360° around the face, the valve is concentric. If not, replace the valve.
- If blue appears 360° around the valve seat, the guide and face are concentric. If not, resurface the seat.
- Check that the seat contact is in the middle of the valve face with the following width:

1.0 to 1.4 mm (0.039 to 0.055 in.)

If not, correct the valve seats as follows:
- If the seating is too high on the valve face, use 30° and 45° cutters to correct the seat.

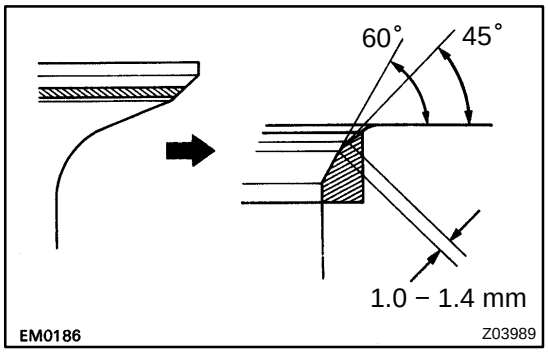

- If the seating is too low on the valve face, use 60° and 45° cutters to correct the seat.

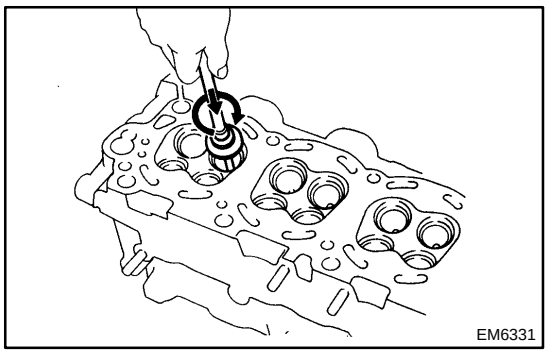

(d) Hand−lap the valve and valve seat with an abrasive compound.
(e) After hand−lapping, clean the valve and valve seat.

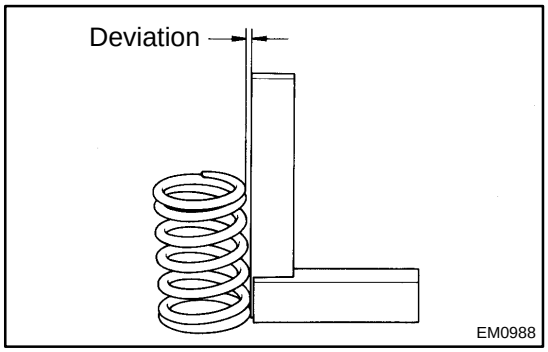

13. INSPECT VALVE SPRINGS

(a) Using a steel square, measure the deviation of the valve spring.

Maximum deviation: 2.0 mm (0.079 in.)

If the deviation is greater than maximum, replace the valve spring.

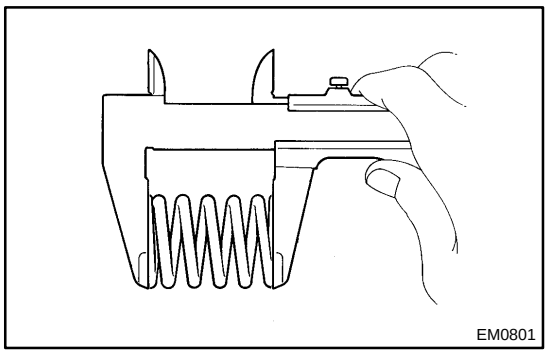
EM0801

(b) Using vernier calipers, measure the free length of the valve spring.

Free length: 54.1 mm (2.130 in.)

If the free length is not as specified, replace the valve spring.

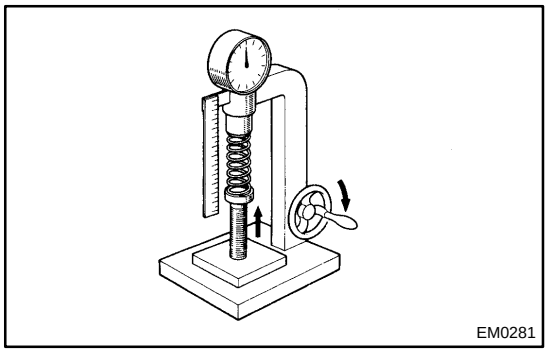
EM0281

(c) Using a spring tester, measure the tension of the valve spring at the specified installed length.

Installed tension:
210 to 226 N (21.4 to 23.0 kgf, 47.2 to 50.7 lbf)
at 35.0 mm (1.378 in.)

If the installed tension is not as specified, replace the valve spring.

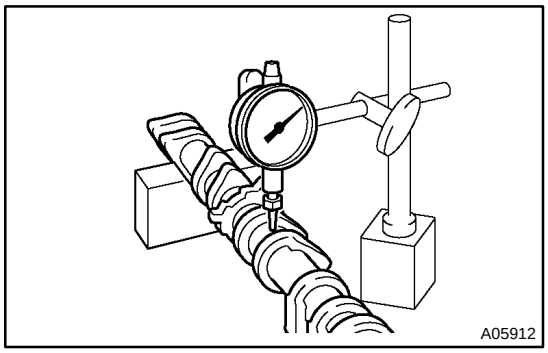
A05912

14. INSPECT CAMSHAFT FOR RUNOUT

(a) Place the camshaft on V−blocks.

(b) Using a dial indicator, measure the circle runout at the center journal.

Maximum circle runout: 0.03 mm (0.0012 in.)

If the circle runout is greater than maximum, replace the camshaft.

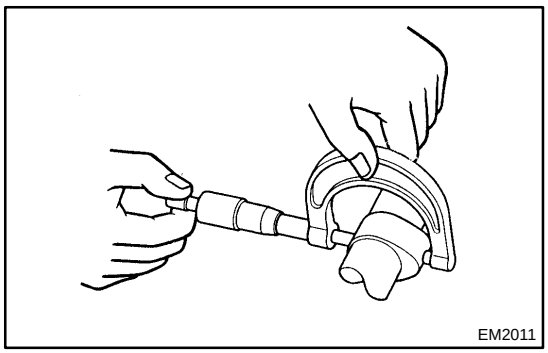
EM2011

15. INSPECT CAM LOBES

Using a micrometer, measure the cam lobe height.

Standard cam lobe height:

Intake	42.61 to 42.71 mm (1.6776 to 1.6815 in.)
Exhaust	42.63 to 42.73 mm (1.6783 to 1.6823 in.)

Minimum cam lobe height:

Intake	42.46 mm (1.6717 in.)
Exhaust	42.48 mm (1.6724 in.)

If the cam lobe height is less than minimum, replace the camshaft.

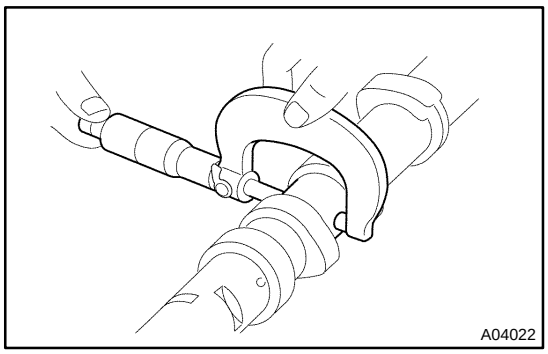

16. INSPECT CAMSHAFT JOURNALS

Using a micrometer, measure the journal diameter.

Journal diameter:

26.954 to 26.970 mm (1.0612 to 1.0618 in.)

If the journal diameter is not as specified, check the oil clearance (see step 20).

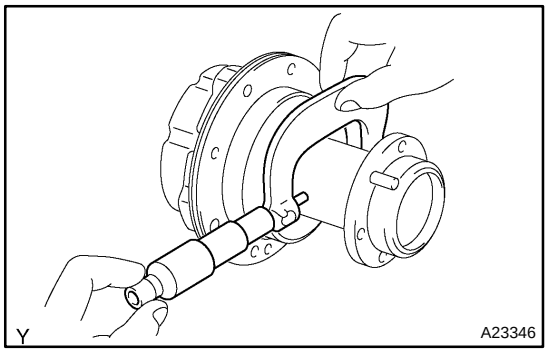

17. INSPECT CAMSHAFT TIMING TUBE

(a) Using a micrometer, measure the journal diameter.

Journal diameter:

39.955 to 39.964 mm (1.5730 to 1.5734 in.)

If the journal diameter is not as specified, check the oil clearance.

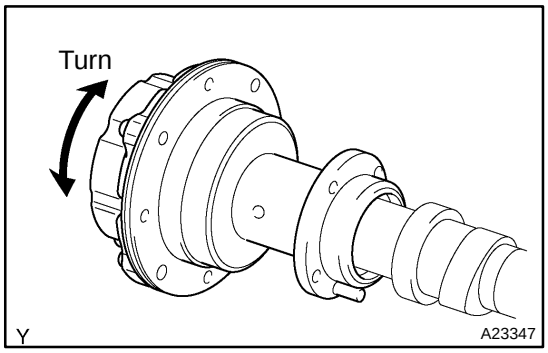

(b) Install the timing tube to the intake camshaft, and check the timing tube turns smoothly.

If necessary, replace the timing tube and intake camshaft.

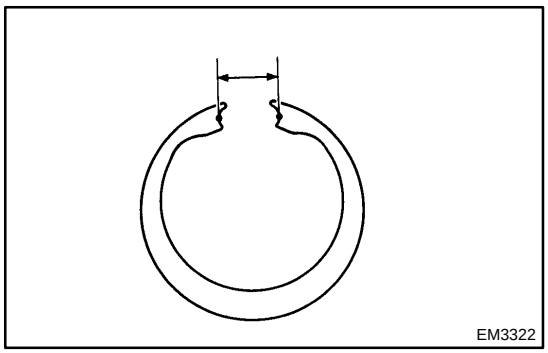

18. INSPECT CAMSHAFT GEAR SPRING

Using vernier calipers, measure the free distance between the spring ends.

Free distance: 18.2 to 18.8 mm (0.717 to 0.740 in.)

If the free distance is not as specified, replace the gear spring.

19. INSPECT CAMSHAFT BEARINGS

Check the bearings for flaking and scoring.

If the bearings are damaged, replace the bearing caps and cylinder head as a set.

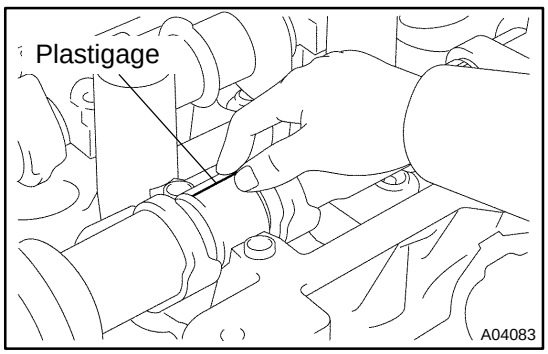

20. INSPECT CAMSHAFT JOURNAL OIL CLEARANCE

(a) Install the camshaft timing tube to the intake camshaft (see page EM−58).

(b) Clean the bearing caps and camshaft journals.

(c) Place the camshafts on the cylinder head.

(d) Lay a strip of Plastigage across each of the camshaft journals.

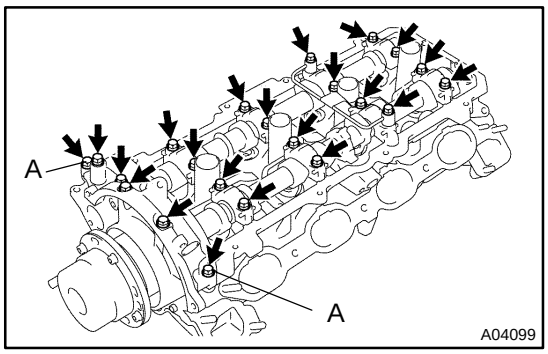

(e) Install the bearing caps (see page EM−60).
Torque:
7.5 N·m (76 kgf·cm, 66 in.·lbf) for bolt A
16 N·m (160 kgf·cm, 12 ft·lbf) for others

NOTICE:
Do not turn the camshaft.

(f) Remove the bearing caps.

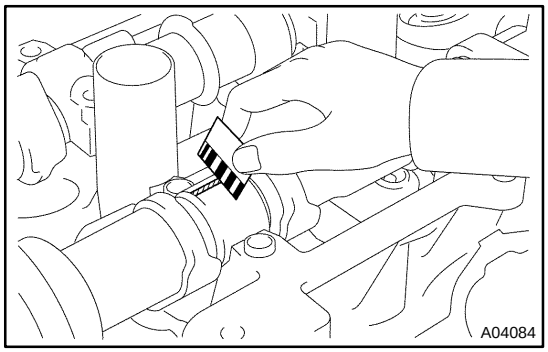

(g) Measure the Plastigage at its widest point.
Standard oil clearance:

Camshaft journal	0.030 to 0.071 mm (0.0012 to 0.0028 in.)
Camshaft timing tube journal	0.036 to 0.057 mm (0.0014 to 0.0022 in.)

Maximum oil clearance:

Camshaft journal	0.100 mm (0.0039 in.)
Camshaft timing tube journal	0.075 mm (0.0030 in.)

If the oil clearance is greater than the maximum, replace the camshaft. If necessary, replace the bearing caps and cylinder head as a set.

(h) Completely remove the Plastigage.
(i) Remove the camshafts.
(j) Remove the camshaft timing tube from the intake camshaft.

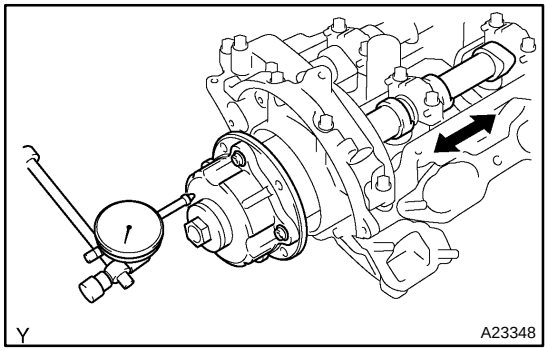

21. INSPECT CAMSHAFT THRUST CLEARANCE

(a) Install the camshaft timing tube to the intake camshaft (see page EM−58).
(b) Install the camshaft (see page EM−58).
(c) Using a dial indicator, measure the thrust clearance while moving the camshaft back and forth.
Standard thrust clearance:

Intake	0 to 0.040 mm (0 to 0.0016 in.)
Exhaust	0.030 to 0.070 mm (0.0012 to 0.0028 in.)

Maximum thrust clearance:

Intake	0.12 mm (0.0047 in.)
Exhaust	0.10 mm (0.0039 in.)

If the thrust clearance is greater than the maximum, replace the camshaft. If necessary, replace the bearing caps and cylinder head as a set.

(d) Remove the camshafts.
(e) Remove the camshaft timing tube from the intake camshaft.

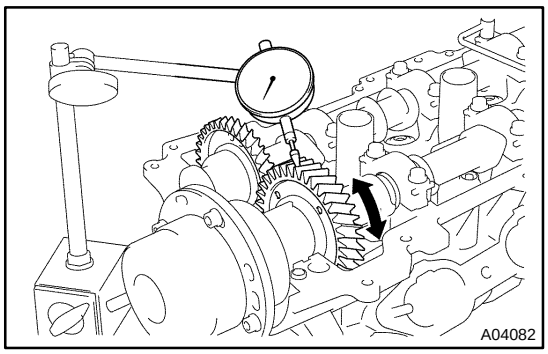

22. INSPECT CAMSHAFT GEAR BACKLASH

(a) Install the drive gear to the camshaft timing tube (See page EM−58).

(b) Install the camshaft timing tube to the intake camshaft (See page EM−58).

(c) Install the camshafts without installing the exhaust camshaft sub−gear and front bearing cap (See page EM−58).

(d) Using a dial indicator, measure the backlash.

Standard backlash:
0.020 to 0.200 mm (0.0008 to 0.0079 in.)
Maximum backlash: 0.30 mm (0.0118 in.)

If the backlash is greater than the maximum, replace the intake camshaft drive gear and exhaust camshaft.

(e) Remove the camshafts.

(f) Remove the camshaft timing tube from the intake camshaft.

(g) Remove the drive gear from the camshaft timing tube.

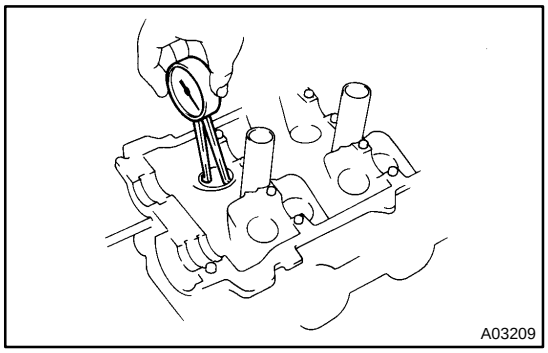

23. INSPECT VALVE LIFTERS AND LIFTER BORES

(a) Using a caliper gauge, measure the lifter bore diameter of the cylinder head.

Lifter bore diameter:
31.000 to 31.016 mm (1.2205 to 1.2211 in.)

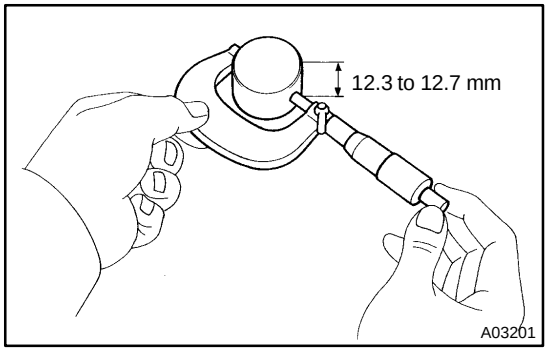

(b) Using a micrometer, measure the lifter diameter at the valve lifter center line, 12.3 to 12.7 mm (0.484 to 0.500 in.) from the valve lifter head.

Lifter diameter:
30.968 to 30.976 mm (1.2192 to 1.2195 in.)

(c) Subtract the lifter diameter measurement from the lifter bore diameter measurement.

Standard oil clearance:
0.024 to 0.050 mm (0.0009 to 0.0020 in.)
Maximum oil clearance:
0.07 mm (0.0028 in.)

If the oil clearance is greater than the maximum, replace the lifter. If necessary, replace the cylinder head.

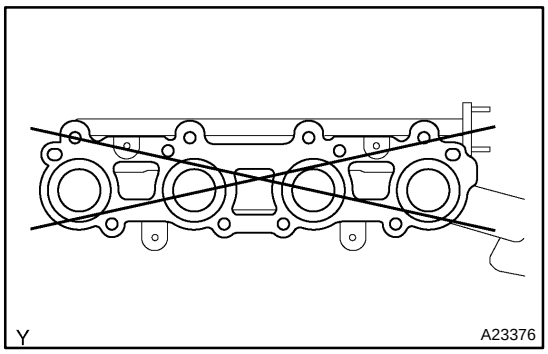

24. INSPECT EXHAUST MANIFOLDS

Using a precision straight edge and feeler gauge, measure the warapage of the surface that is in contact with the cylinder head.

Maximum warpage: 0.10 mm (0.0394 in.)

If warpage is greater than maximum, replace the manifold.

EM1X2−02

INSTALLATION

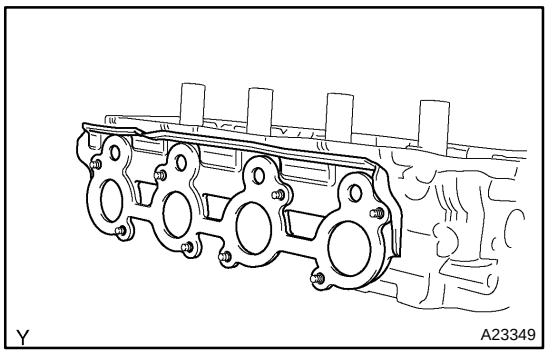

1. INSTALL RH EXHAUST MANIFOLD TO CYLINDER HEAD

(a) Place a new gasket on the cylinder head.

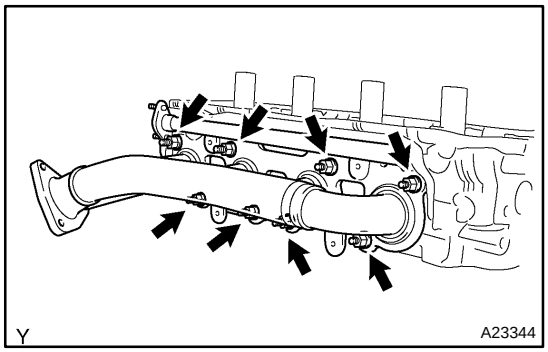

(b) Install the exhaust manifold with 8 new nuts. Uniformly tighten the nuts in several steps.
Torque: 44 N·m (450 kgf·cm, 32 ft·lbf)

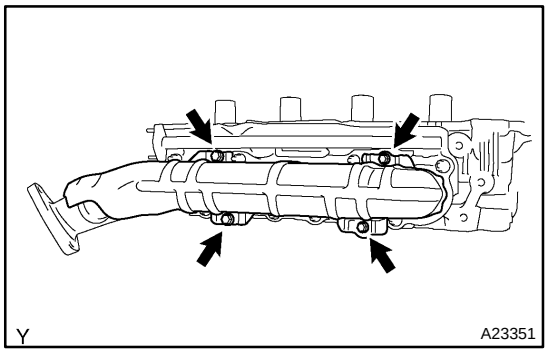

(c) Install the heat insulator with the 4 bolts.
Torque: 7.5 N·m (76 kgf·cm, 66 in.·lbf)

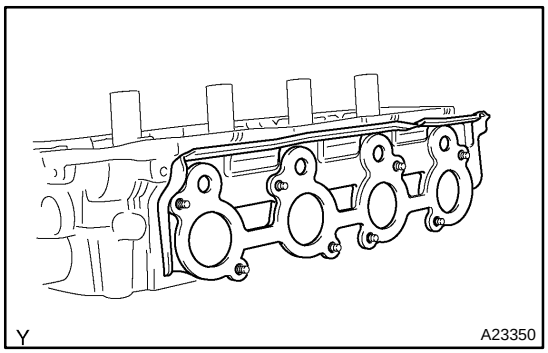

2. INSTALL LH EXHAUST MANIFOLD TO CYLINDER HEAD

(a) Place a new gasket on the cylinder head.

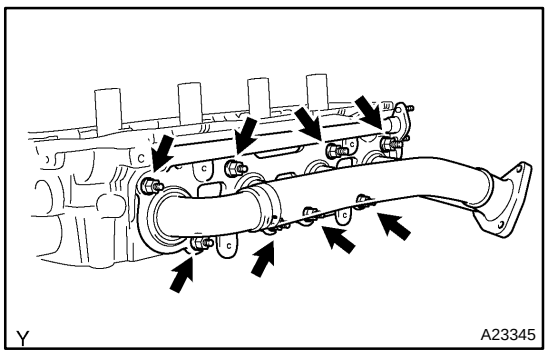

(b) Install the exhaust manifold with 8 new nuts. Uniformly tighten the nuts in several steps.
Torque: 44 N·m (450 kgf·cm, 32 ft·lbf)

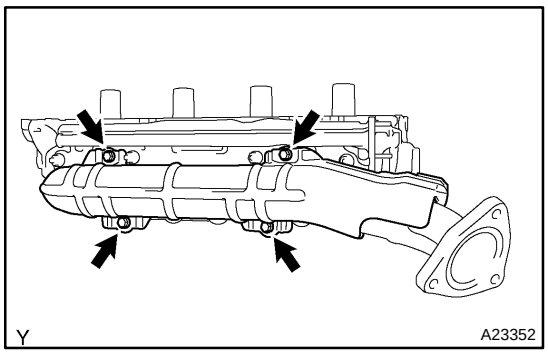

(c) Install the heat insulator with the 4 bolts.
Torque: 7.5 N·m (76 kgf·cm, 66 in.·lbf)

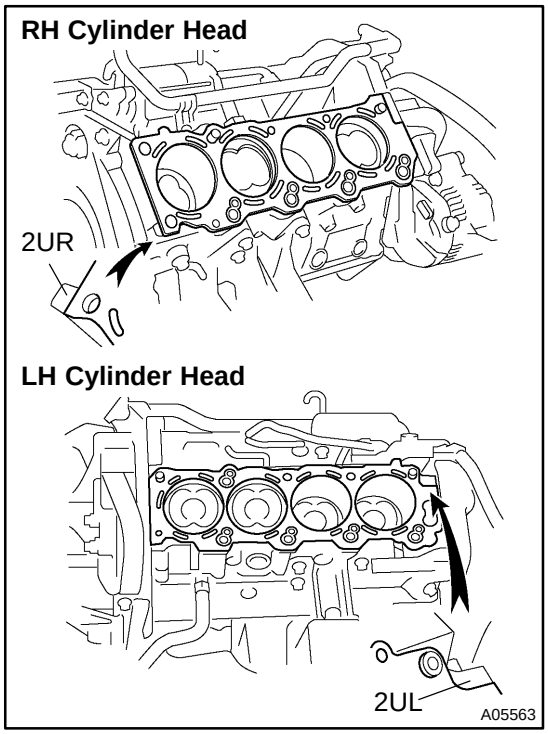

3. PLACE CYLINDER HEADS ON CYLINDER BLOCK

(a) Place 2 new cylinder head gaskets in the positions on the cylinder block.

HINT:

On the rear side of the cylinder head gasket are marked to distinguish the LH and RH banks, a ”2UR” mark for the RH bank and a ”2UL” mark for the LH bank.

NOTICE:

Be careful of the installation direction.

(b) Place the 2 cylinder heads in the positions on the cylinder head gaskets.

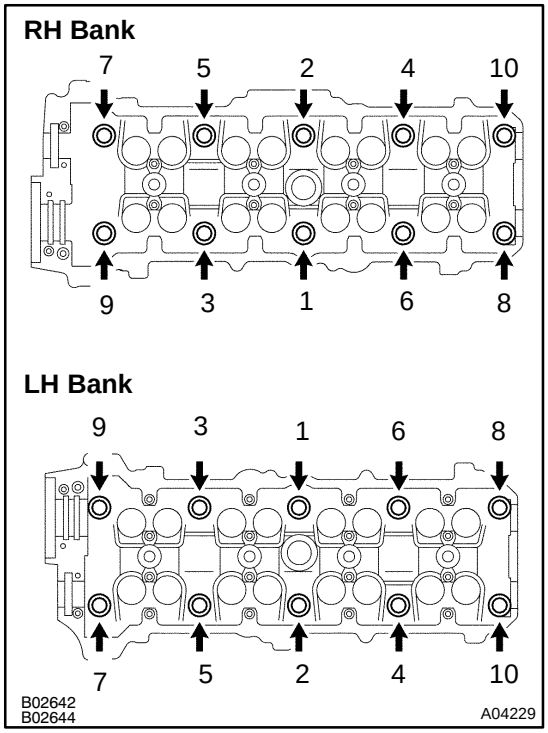

4. INSTALL CYLINDER HEAD BOLTS

HINT:

- The cylinder head bolts are tightened in 2 progressive steps (steps (c) and (e)).
- If any cylinder head bolt is broken or deformed, replace it.

(a) Apply a light coat of engine oil to the threads and under the heads of the cylinder head bolts.

(b) Install the plate washer to the cylinder head bolt.

(c) Install and uniformly tighten the 10 cylinder head bolts on one side of the cylinder head in several steps in the sequence shown, then perform the same procedure to the other side as shown.
Torque: 40 N·m (408 kgf·cm, 30 ft·lbf)

If any of the cylinder head bolts does not meet the torque specification, replace the cylinder head bolt.

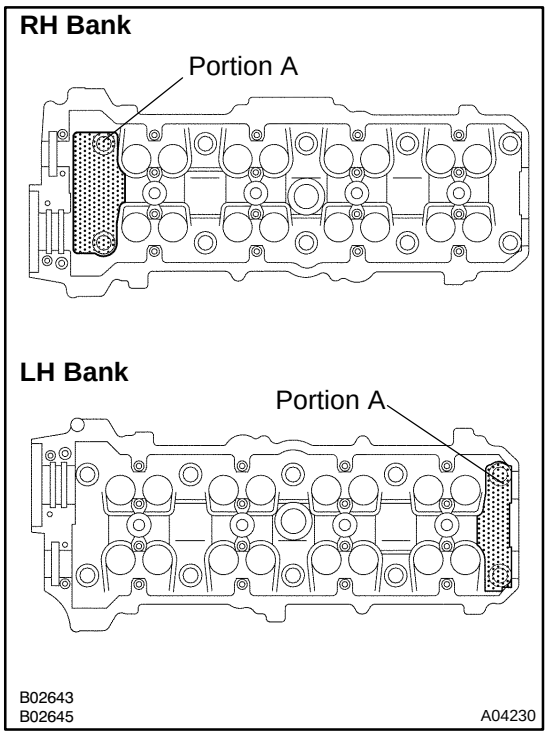

NOTICE:
Do not drop the plate washer for cylinder head bolt into portion A of the cylinder head. If dropped into portion A, the plate washer will pass through the cylinder head and cylinder block into the oil pan.

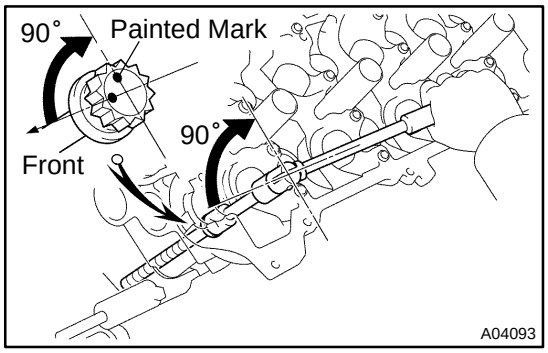

(d) Mark the front of the cylinder head bolt with paint.
(e) Retighten the cylinder head bolts by 90° in the numerical order shown.
(f) Check that the painted mark is now at a 90° angle to front.

5. INSTALL SPARK PLUGS

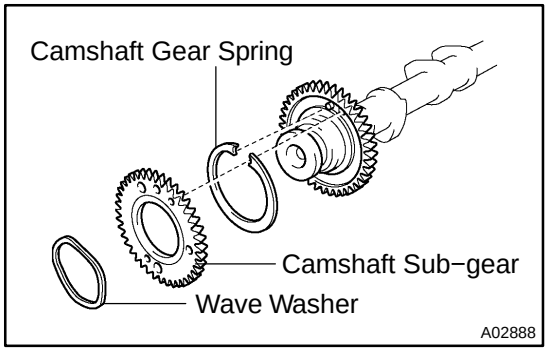

6. ASSEMBLE EXHAUST CAMSHAFT

(a) Install the camshaft gear spring, camshaft sub−gear and wave washer.

HINT:
Attach the pin on the gear to the gear spring end.

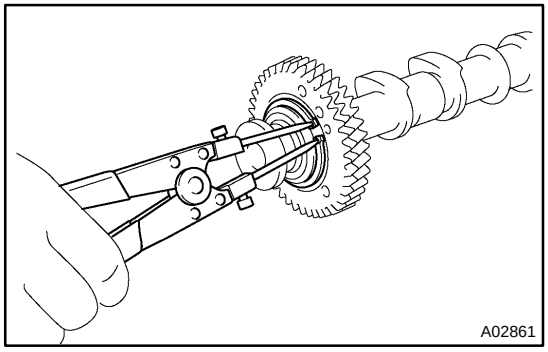

(b) Using snap ring pliers, install the snap ring.

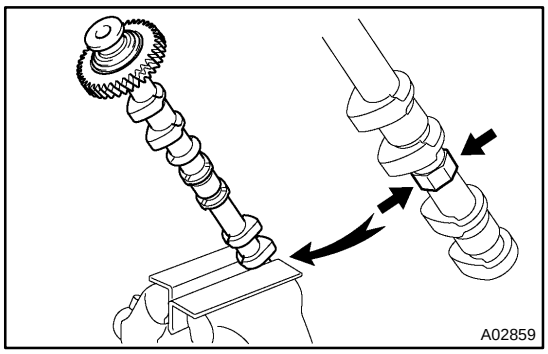

(c) Mount the hexagon wrench head portion of the camshaft in a vise.

NOTICE:

Be careful not to damage the camshaft.

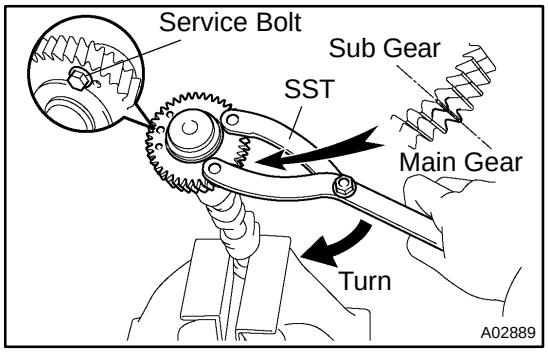

(d) Using SST, align the holes of the camshaft main gear and sub−gear by turning the camshaft sub−gear counterclockwise, and temporarily install a service bolt.
SST 09960−10010 (09962−01000, 09963−00500)

(e) Align the gear teeth of the main gear and sub−gear, and tighten the service bolt.

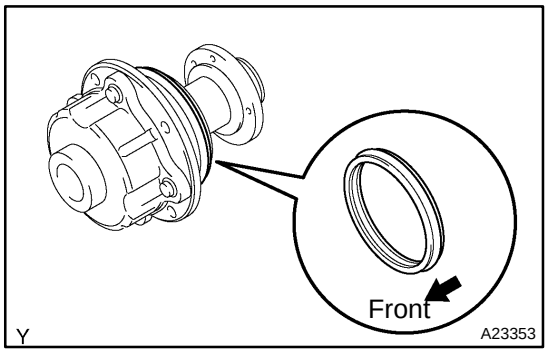

7. INSTALL CAMSHAFT TIMING TUBE TO INTAKE CAMSHAFT

(a) Place a new oil seal to the timing tube.

NOTICE:

Be careful of the installation direction.

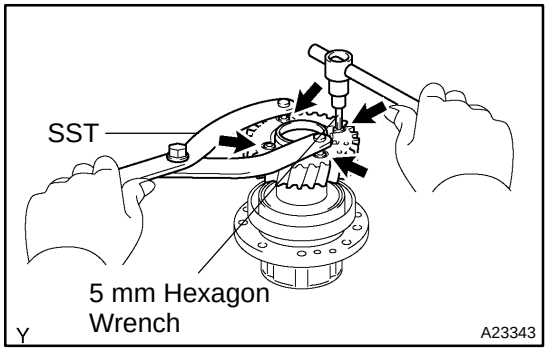

(b) Align the timing tube knock pin with the knock pin groove of the drive gear, and temporarily install the drive gear with the 4 bolts.

(c) Using SST and a 5 mm hexagon wrench, uniformly tighten the 4 bolts in several steps.
SST 09960−10010 (09962−01000, 09963−00500)
Torque: 7.5 N·m (76 kgf·cm, 66 in.·lbf)

NOTICE:

Be careful not to damage the timing tube.

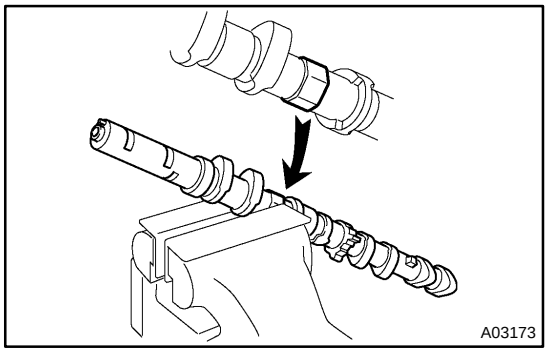

(d) Mount the hexagon head portion of the camshaft in a vise.

NOTICE:

Be careful not to damage the camshaft.

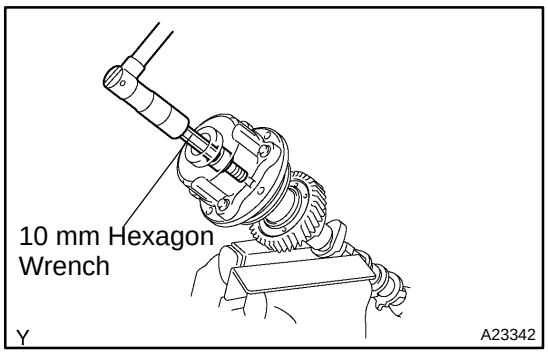

(e) Align the camshaft knock pin with the knock pin groove of the timing tube, and push the timing tube by hand until you it touches the bottom.

(f) Using a 10 mm hexagon wrench, install the bolt.
Torque: 78 N·m (790 kgf·cm, 58 ft·lbf)

(g) Install the seal washer and screw plug.
Torque: 15 N·m (150 kgf·cm, 11 ft·lbf)

8. INSTALL CAMSHAFTS

NOTICE:

Since the thrust clearance of the camshaft is small, the camshaft must be kept level while it is being installed. If the camshaft is not kept level, the portion of the cylinder head receiving the shaft thrust may crack or be damaged, causing the camshaft to seize or break. To avoid this, the following steps should be carried out.

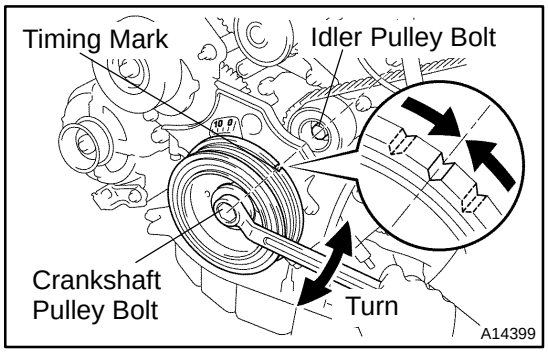

(a) Set the crankshaft pulley position.
Turn the pulley clockwise or counterclockwise, and align the timing mark of the crankshaft pulley with the centers of the crankshaft pulley bolt and idler pulley bolt.

NOTICE:

Having the crankshaft pulley at the wrong angle can cause the piston head and valve head to come into contact with each other when you install the camshaft, causing damage. So always set the crankshaft pulley at the correct angle.

(b) Install the LH camshafts.

(1) Apply MP grease to the thrust portion of the intake and exhaust camshafts.

(2) Align the timing marks (2−dot mark) of the camshaft drive and driven main gears, and place the intake and exhaust camshafts.

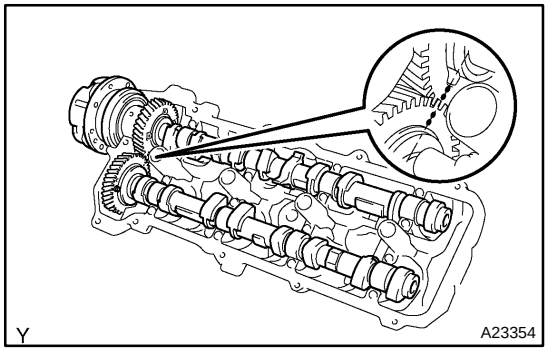

(3) Apply seal packing to the camshaft housing plug.
- Remove the old packing material (FIPG).
- Apply seal packing to the housing plug.

Seal packing: Part No. 08826−00080 or equivalent

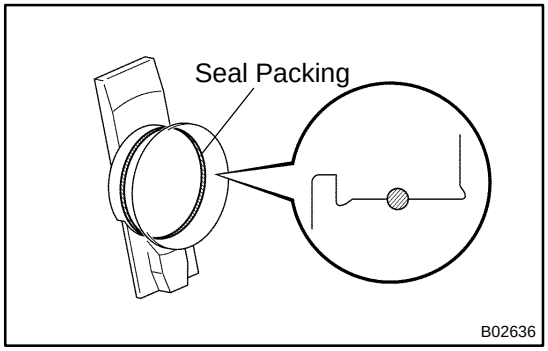

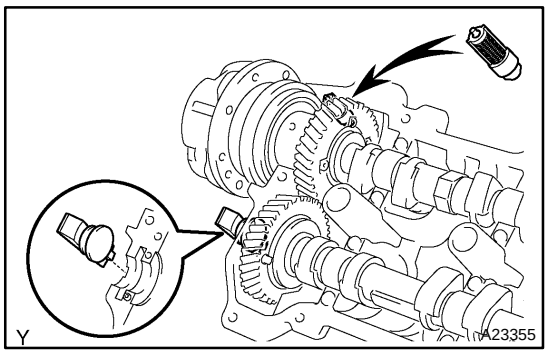

(4) Install the camshaft housing plug to the cylinder head as shown in the illustration.

(5) Install the strainer to the cylinder head.

NOTICE:

Be careful of the installation direction.

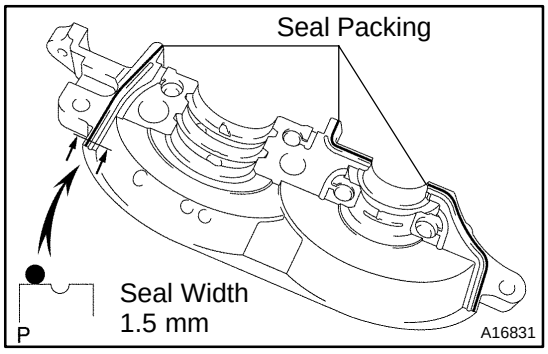

(6) Apply seal packing to the front bearing cap.

- Remove any old packing material (FIPG) and be careful not to drop any oil on the contact surfaces of the bearing cap and cylinder head.

  Using a razor blade and gasket scraper, remove all the old packing material (FIPG) from the gasket surfaces and groove.

  Thoroughly clean all components to remove all the loose material.

  Using a non−residue solvent, clean both sealing surfaces.
- Apply seal packing to the bearing cap as shown in the illustration.

  Install a nozzle that has been cut to a 1.5 mm (0.059 in.) opening.

  Parts must be assembled within 5 minutes of application. Otherwise the material must be removed and reapplied.

  Immediately remove the nozzle from the tube and reinstall cap.

Seal packing: Part No. 08826−00080 or equivalent

NOTICE:

Do not apply seal packing to the front bearing cap grooves.

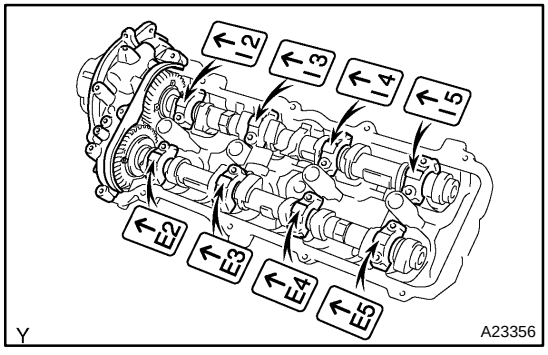

(7) Install the front bearing cap.

HINT:

Installing the front bearing cap will determine the thrust portion of the camshaft.

(8) Install the other bearing caps in the sequence shown with the arrow mark facing forward.

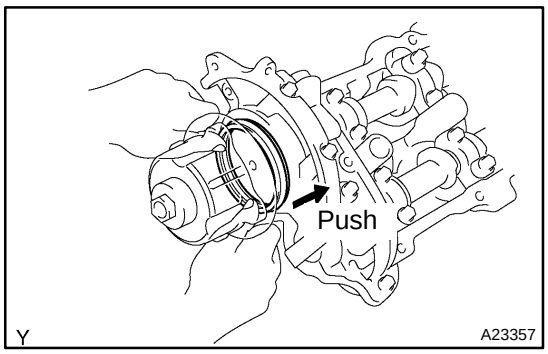

(9) Push in the camshaft oil seal.

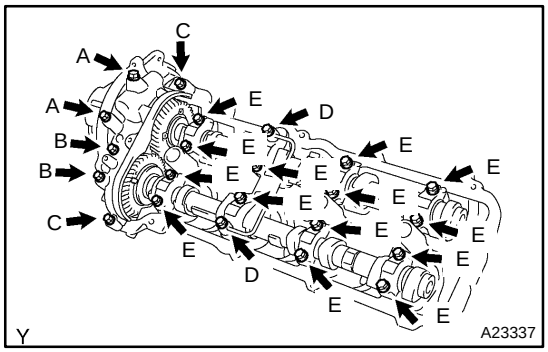

(10) Install 4 new seal washers to the bearing cap bolts (A and B).

(11) Apply a light coat of engine oil to the threads and under the heads of the bearing cap bolts (D and E).

NOTICE:

Do not apply engine oil under the heads of the bearing cap bolts (A), (B) and (C).

HINT:

Each bolt length is indicated in the illustration.

Bolt length:

94 mm (3.70 in.) for A with seal washer

72 mm (2.83 in.) for B with seal washer

25 mm (0.98 in.) for C

52 mm (2.05 in.) for D

38 mm (1.50 in.) for E

(12) Install the oil feed pipe and the 22 bearing cap bolts as shown in the illustration.

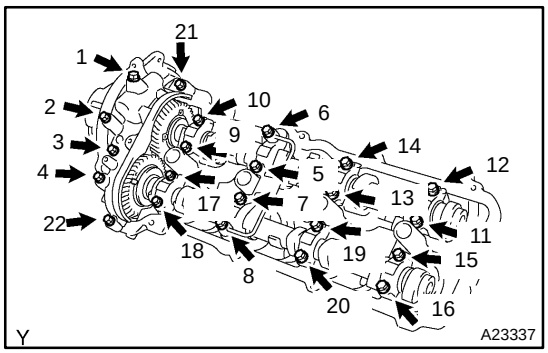

(13) Uniformly tighten the 22 bearing cap bolts in several steps, in the sequence shown.

Torque:

7.5 N·m (76 kgf·cm, 66 in.·lbf) for bolt C

16 N·m (160 kgf·cm, 12 ft·lbf) for others

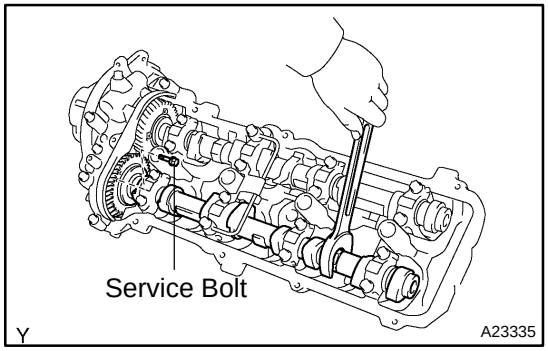

(14) Remove the service bolt.

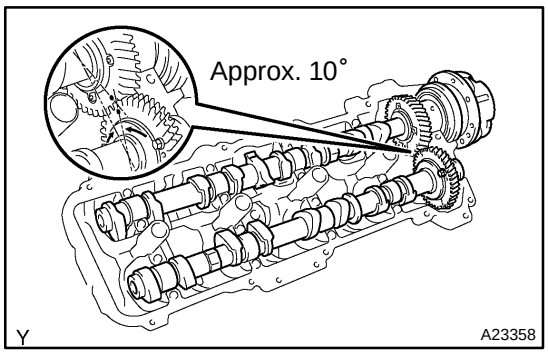

(c) Install the RH camshafts.
(1) Apply MP grease to the thrust portions of the intake and exhaust camshafts.
(2) Align the timing marks (1−dot mark) of the camshaft drive and driven main gears, and place the intake and exhaust camshafts.
(3) Set the timing mark (1−dot mark) of the camshaft drive and driven main gears at approx. 10° angle.

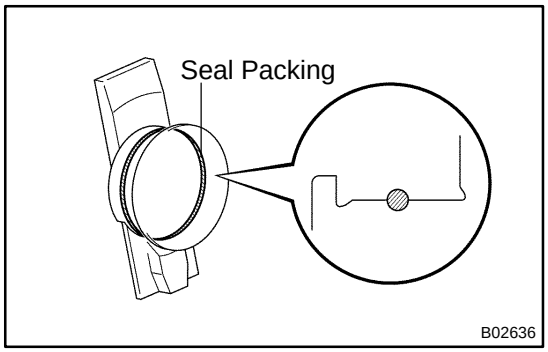

(4) Apply seal packing to the camshaft housing plug.
- Remove the old packing material (FIPG).
- Apply seal packing to the housing plug.

Seal packing: Part No. 08826−00080 or equivalent

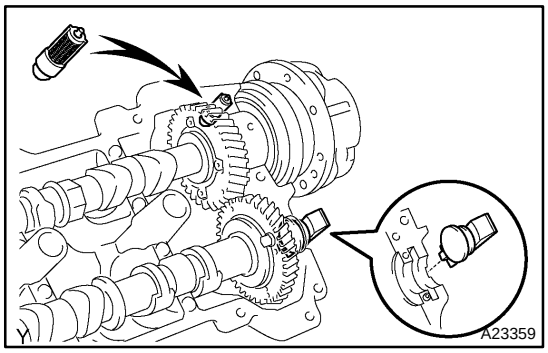

(5) Install the camshaft housing plug to the cylinder head as shown in the illustration.
(6) Install the strainer to the cylinder head.

NOTICE:
Be careful of the installation direction.

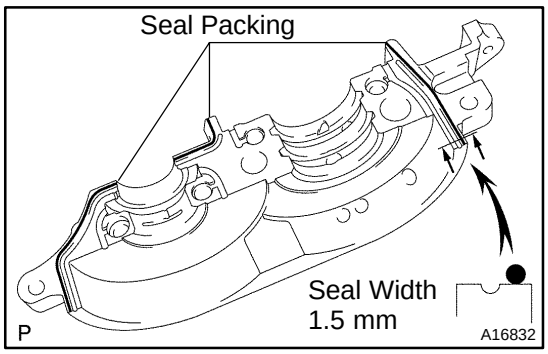

(7) Apply seal packing to the front bearing cap.

- Remove any old packing material (FIPG) and be careful not to drop any oil on the contact surfaces of the bearing cap and cylinder head.
  Using a razor blade and gasket scraper, remove all the old packing material (FIPG) from the gasket surfaces and groove.
  Thoroughly clean all components to remove all the loose material.
  Using a non−residue solvent, clean both sealing surfaces.
- Apply seal packing to the bearing cap as shown in the illustration.
  Install a nozzle that has been cut to a 1.5 mm (0.059 in.) opening.
  Parts must be assembled within 5 minutes of application. Otherwise the material must be removed and reapplied.
  Immediately remove the nozzle from the tube and reinstall cap.

Seal packing: Part No. 08826−00080 or equivalent

NOTICE:

Do not apply seal packing to the front bearing cap grooves.

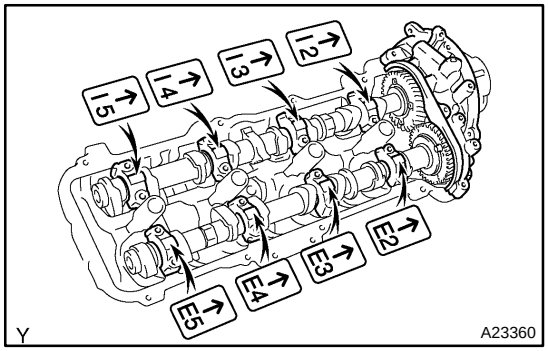

(8) Install the front bearing cap.

HINT:

Installing the front bearing cap will determine the thrust portion of the camshaft.

(9) Install the other bearing caps in the sequence shown with the arrow mark facing forward.

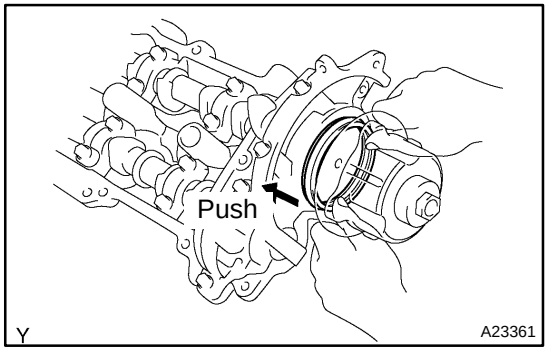

(10) Push in the camshaft oil seal.

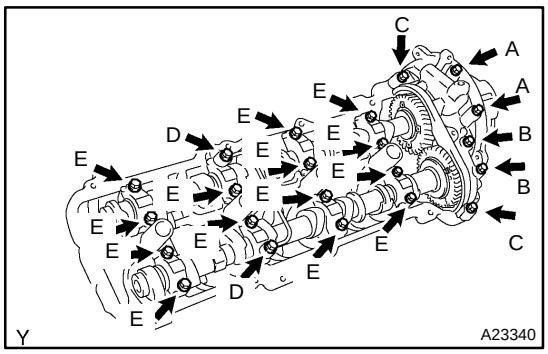

(11) Install 4 new seal washers to the bearing cap bolts (A and B).

(12) Apply a light coat of engine oil on the threads and under the heads of the bearing cap bolts (D and E).

NOTICE:

Do not apply engine oil under the heads of the bearing cap bolts (A), (B) and (C).

HINT:

Each bolt length is indicated in the illustration.

Bolt length:

94 mm (3.70 in.) for A with seal washer

72 mm (2.83 in.) for B with seal washer

25 mm (0.98 in.) for C

52 mm (2.05 in.) for D

38 mm (1.50 in.) for E

(13) Install the oil feed pipe and the 22 bearing cap bolts as shown in the illustration.

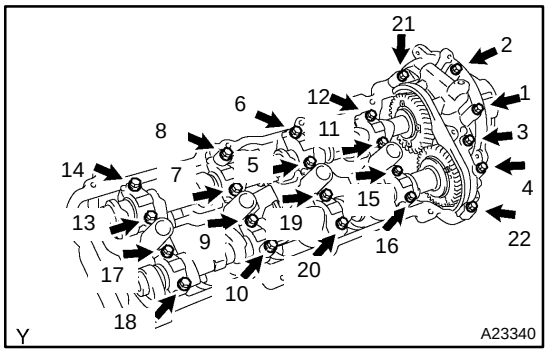

(14) Uniformly tighten the 22 bearing cap bolts in several steps, in the sequence shown.

Torque:

7.5 N·m (76 kgf·cm, 66 in.·lbf) for bolt C

16 N·m (160 kgf·cm, 12 ft·lbf) for others

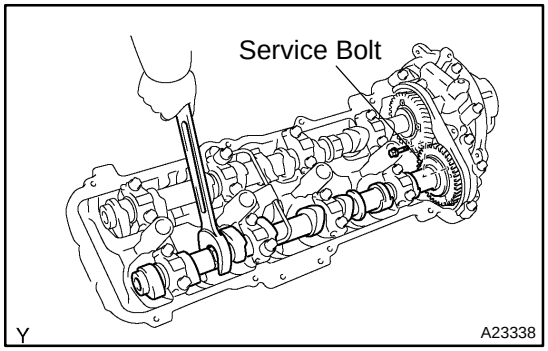

(15) Remove the service bolt.

9. CHECK AND ADJUST VALVE CLEARANCE

(See page EM−4)

Turn the camshaft so that the cam lobe faces upward, and check and adjust the valve clearance.

10. INSTALL CAMSHAFT TIMING OIL CONTROL VALVE

(See page SF−50)

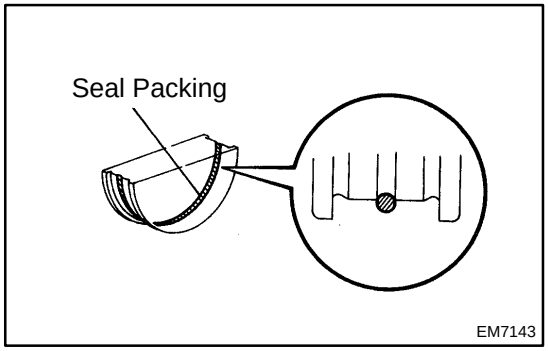

11. INSTALL SEMI−CIRCULAR PLUGS

(a) Remove any old packing material (FIPG).

(b) Apply seal packing to the semi−circular plug grooves.

Seal packing:

Part No. 08826−00080 or equivalent

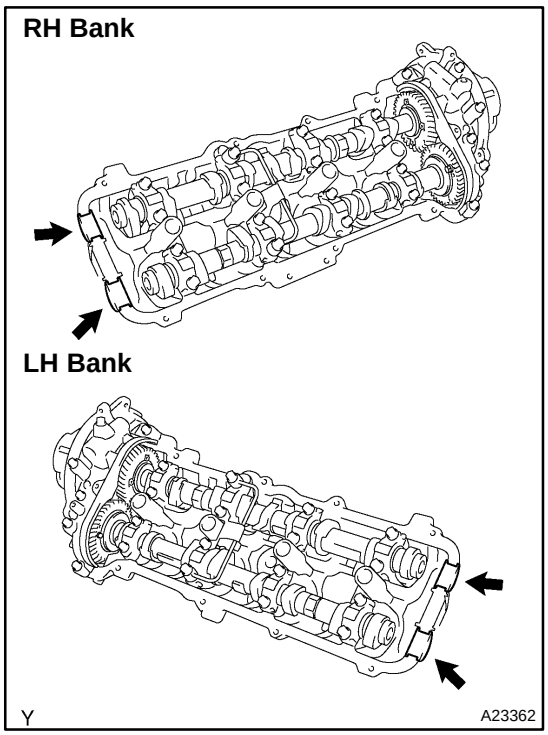

(c) Install the 4 semi−circular plugs to the cylinder heads as shown in the illustration.

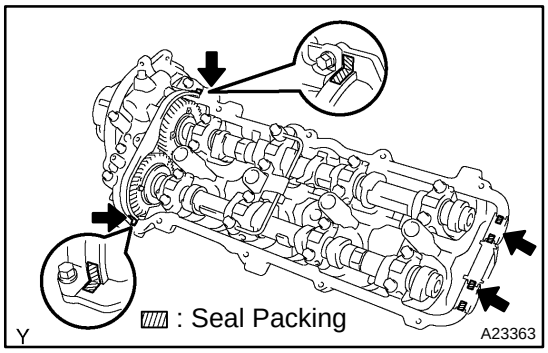

12. INSTALL LH CYLINDER HEAD COVER

(a) Remove any old packing material (FIPG).

(b) Apply seal packing to the cylinder heads as shown in the illustration.

Seal packing: Part No. 08826−00080 or equivalent

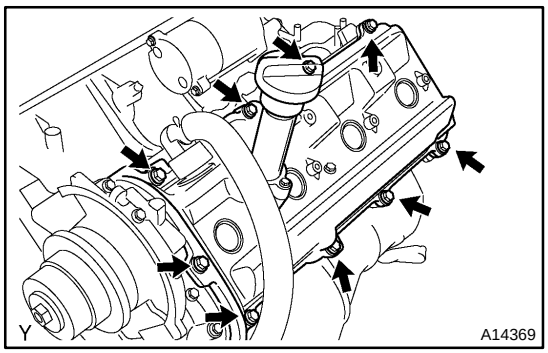

(c) Install the gasket to the cylinder head cover.

(d) Install the seal washer to the bolt.

(e) Install the cylinder head cover with the 9 bolts. Uniformly tighten the bolts in several steps.

Torque: 6.0 N·m (60 kgf·cm, 53 in.·lbf)

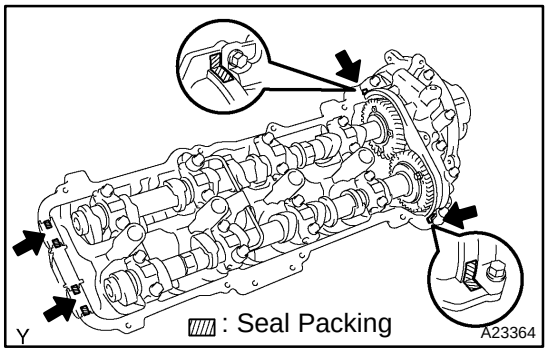

13. INSTALL RH CYLINDER HEAD COVER

(a) Remove any old packing material (FIPG).

(b) Apply seal packing to the cylinder heads as shown in the illustration.

Seal packing: Part No. 08826−00080 or equivalent

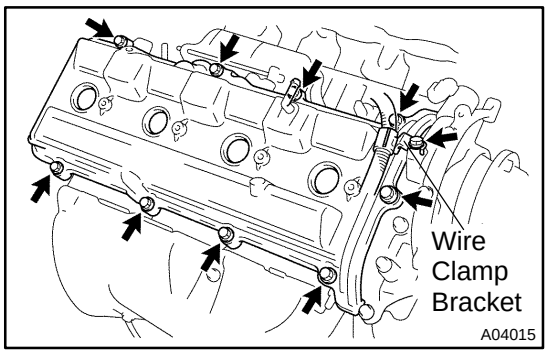

(c) Install the gasket to the cylinder head cover.
(d) Install the seal washer to the bolt.
(e) Install the cylinder head cover with the 9 bolts. Uniformly tighten the bolts in several steps. Install the 2 cylinder head covers.
Torque: 6.0 N·m (60 kgf·cm, 53 in.·lbf)
(f) Install the wire clamp bracket on the engine wire to the camshaft bearing cap.

14. INSTALL ENGINE HANGERS
Torque: 37 N·m (380 kgf·cm, 27 ft·lbf)
15. INSTALL VVT SENSORS (See page SF−79)
16. INSTALL OIL DIPSTICK AND GUIDE FOR ENGINE
17. INSTALL OIL DIPSTICK AND GUIDE FOR A/T
18. INSTALL IGNITION COILS (See page IG−6)

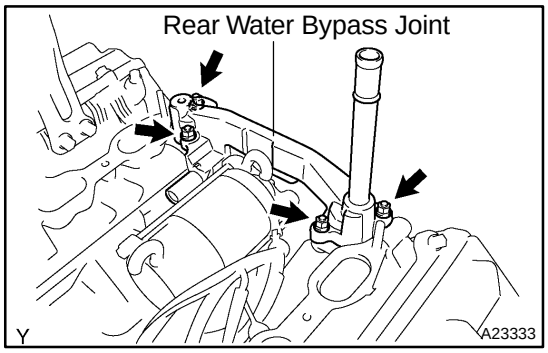

19. INSTALL REAR WATER BYPASS JOINT
(a) Install 2 new gaskets to the cylinder head.
(b) Install the the water bypass joint with the 4 nuts to the cylinder heads. Alternately tighten the nuts.
Torque: 18 N·m (185 kgf·cm, 13 ft·lbf)

20. INSTALL NO.2 AIR SWITCHING VALVES (See page EC−27)
21. INSTALL AIR PUMP ASSEMBLY (See page EC−27)

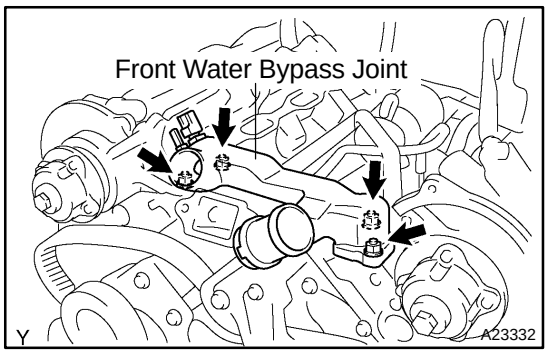

22. INSTALL FRONT WATER BYPASS JOINT
Install 2 new gaskets and the water bypass joint with the 4 nuts. Alternately tighten the nuts.
Torque: 18 N·m (185 kgf·cm, 13 ft·lbf)

23. INSTALL WATER INLET AND INLET HOUSING ASSEMBLY (See page CO−8)

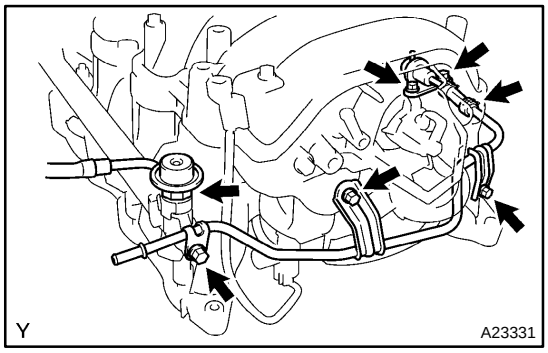

24. ASSEMBLE INTAKE MANIFOLDS
(a) Install the 2 delivery pipes and 8 injectors (see page SF−31).
(b) Install 2 new gaskets and fuel pulsation damper.
(c) Install a new O−ing and fuel pressure regulator with the 2 bolts.
(d) Install the fuel return pipe to the intake manifold with the 3 bolts.
(e) Connect the fuel return hose to the fuel pressure regulator.

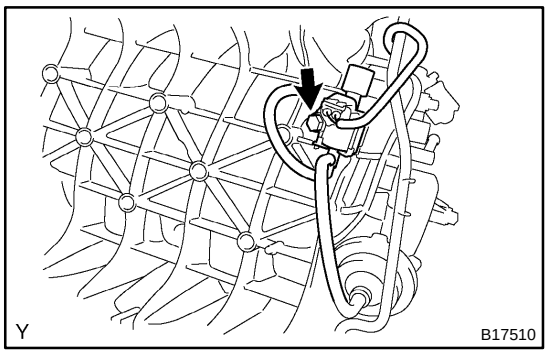

(f) Install the VSV for ACIS with the bolt.
Torque: 7.5 N·m (76 kgf·cm, 66 in.·lbf)

(g) Install the throttle body (See page SF−45).

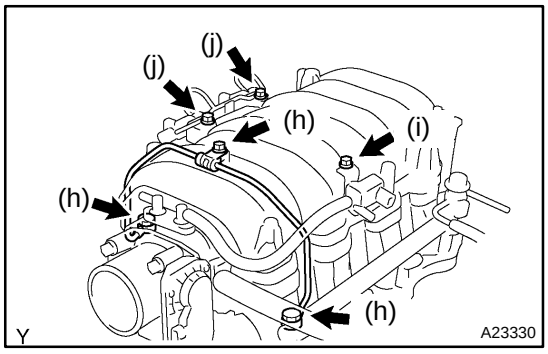

(h) Install 4 new gaskets and front fuel pipe with the bolt and 2 unions to the intake manifold.
Torque:
39 N·m (400 kgf·cm, 29 ft·lbf) for union bolts
7.5 N·m (80 kgf·cm, 66 in.·lbf) for bolt

(i) Install the VSV for EVAP with the bolt to the intake manifold and connect the EVAP hose.
Torque: 7.5 N·m (76 kgf·cm, 66 in.·lbf)

(j) Install the 2 VSVs for air injection system with the 2 bolts.
Torque: 7.5 N·m (76 kgf·cm, 66 in.·lbf)

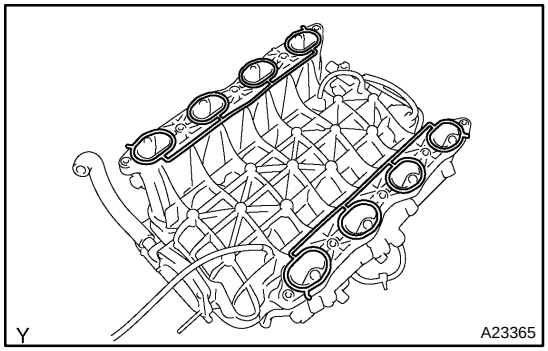

25. INSTALL INTAKE MANIFOLD ASSEMBLY

(a) Place 2 new gaskets on the intake manifold.

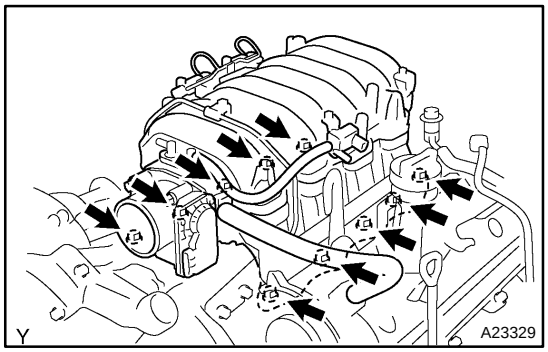

(b) Place the intake manifold assembly on the cylinder heads.

(c) Install and uniformly tighten the 6 bolts and 4 nuts in several steps.
Torque: 18 N·m (185 kgf·cm, 13 ft·lbf)

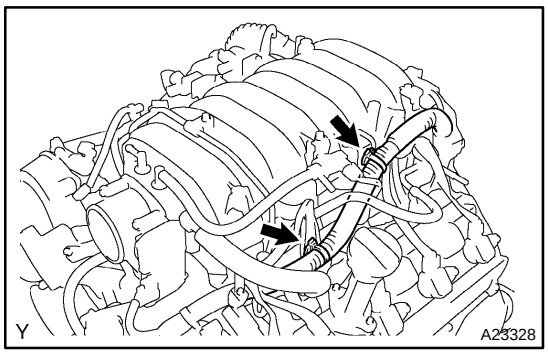

(d) Install the throttle body cover bracket to the intake manifold.
Torque: 7.5 N·m (76 kgf·cm, 66 in.·lbf)
(e) Install the wire bracket to the intake manifold with the bolt.
Torque: 7.5 N·m (76 kgf·cm, 66 in.·lbf)
(f) Connect the engine wire to the engine hanger and wire bracket.
(g) Install the engine wire to the LH No.1 timing belt rear plate.

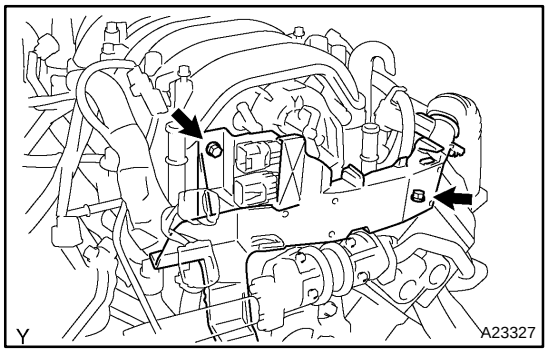

(h) Connect the wire protector to the intake manifold and cylinder heads with the 2 bolts.
(i) Install the 2 ground cables with the 2 bolts to the RH and LH cylinder heads.

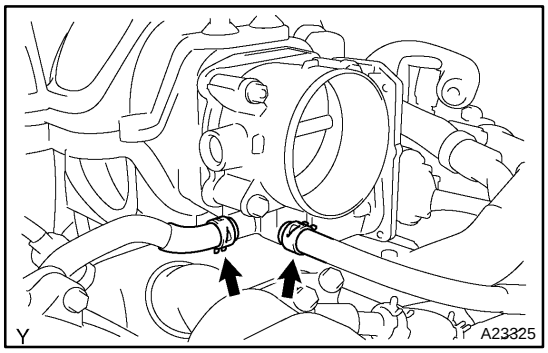

(j) Connect the 2 water bypass hoses to the throttle body.

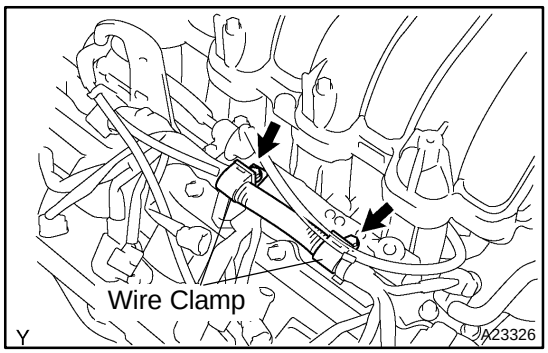

(k) Connect the 2 wire clamps to the wire clamp bracket on the RH delivery pipe.

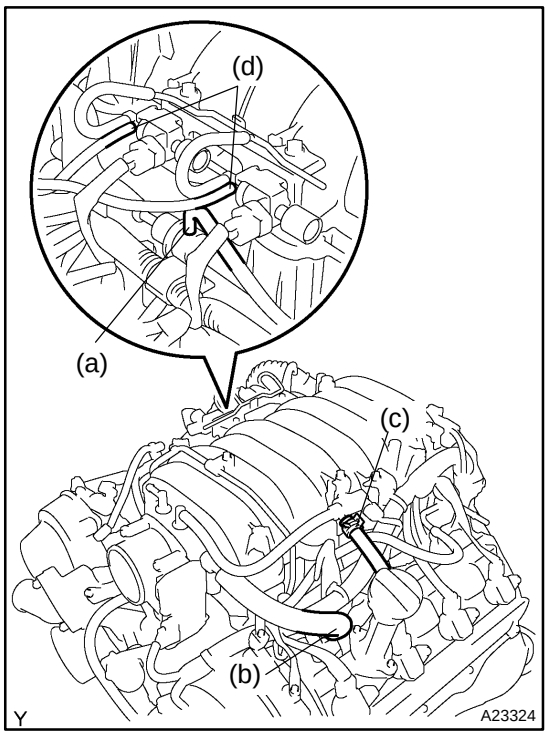

26. CONNECT HOSES TO INTAKE MANIFOLD

(a) Connect the vacuum hose to the fuel pressure regulator.

(b) Connect the PCV hose to the PCV valve on the LH the cylinder head.

(c) Connect the EVAP hose (from charcoal canister) to the VSV for EVAP.

(d) Connect the 2 vacuum hoses to the VSV for the air injection system.

(e) Connect the brake booster tube.

27. CONNECT CONNECTORS TO INTAKE MANIFOLD

(a) Connect the throttle control connector.

(b) Connect the 2 VSV connectors for the air injection system.

(c) Connect the VSV connector for the EVAP.

(d) Connect the 8 injector connectors.

(e) Connect the ECT sensor connector.

(f) Connect the 2 air fuel ratio sensor connectors.

28. CONNECT FUEL INLET HOSE (See page SF−31) AND FUEL RETURN HOSE

29. INSTALL TIMING BELT REAR PLATES

(a) Install the RH No.1 timing belt rear plates.

Install the RH No.1 timing belt rear plates to the cylinder head with the 3 bolts and stud bolt.

Torque: 7.5 N·m (76 kgf·cm, 66 in.·lbf)

(b) Install the LH No.1 timing belt rear plates.

(1) Connect the wire clamp to the No.1 timing belt rear plate.

(2) Install the LH No.1 timing belt rear plates to the cylinder head with the 3 bolts and stud bolt.

Torque: 7.5 N·m (76 kgf·cm, 66 in.·lbf)

30. INSTALL THROTTLE BODY COVER

31. INSTALL IGNITION COILS (See page IG−6)

32. INSTALL OIL DIPSTICK AND GUIDE FOR A/T

33. INSTALL FRONT EXHAUST PIPE (See page EM−127)

34. INSTALL PS PUMP (See page EM−83)

35. INSTALL CAMSHAFT POSITION SENSOR (See page IG−9)

36. INSTALL CAMSHAFT TIMING PULLEYS (See page EM−23)

37. CONNECT TIMING BELT TO CAMSHAFT TIMING PULLEYS (See page EM−23)

38. CHECK ENGINE OIL LEVEL

EM0L4−10

REASSEMBLY

HINT:

- Thoroughly clean all parts to be assembled.
- Before installing the parts, apply fresh engine oil to all sliding and rotating surfaces.
- Replace all gaskets and oil seals with new ones.

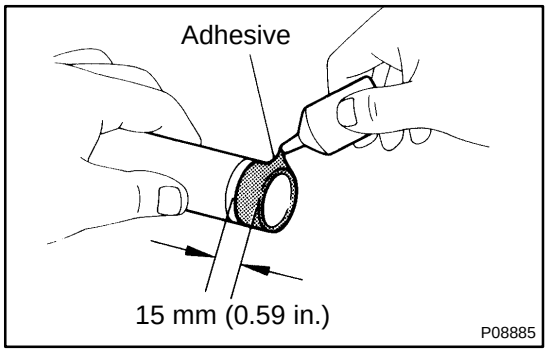

1. INSTALL SPARK PLUG TUBES

HINT:

When using a new cylinder head, spark plug tubes must be installed.

(a) Apply adhesive to the end of the spark plug tube.
Adhesive:
Part No. 08833−00070, THREE BOND 1324
or equivalent

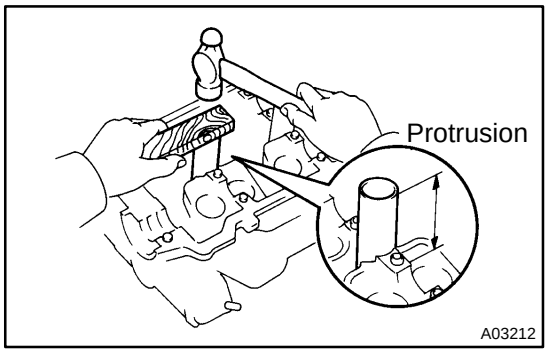

(b) Using a wooden block and hammer, tap in a new spark tube until there is 40.9 − 42.1 mm (1.610 − 1.658 in.) protruding from the camshaft bearing cap installation surface of the cylinder head.

NOTICE:
Avoid tapping a new spark plug tube too far for measuring the amount of the protrusion while tapping.

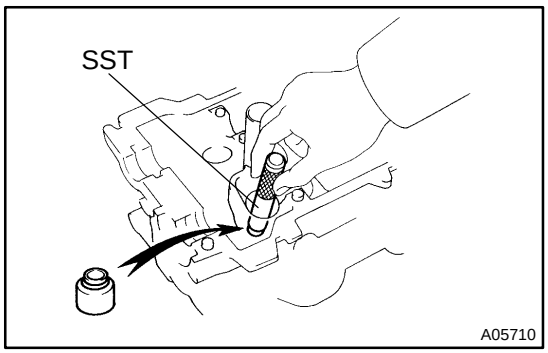

2. INSTALL VALVES

(a) Using SST, push in a new oil seal.
SST 09201−41020

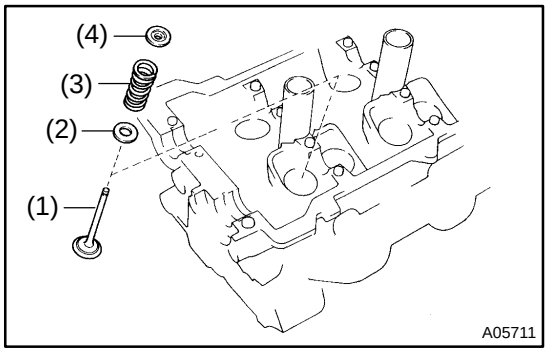

(b) Install the valve (1), spring seat (2), valve spring (3) and spring retainer (4).

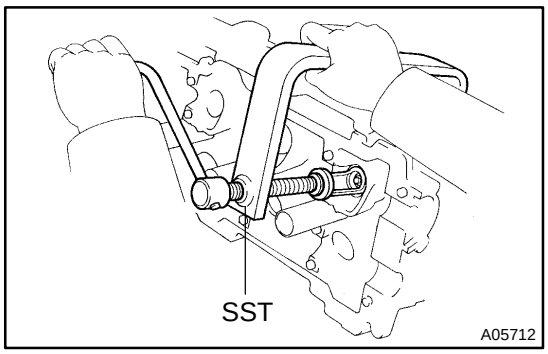

(c) Using SST, compress the valve spring and place the 2 keepers around the valve stem.
SST 09202−70020 (09202−00010)

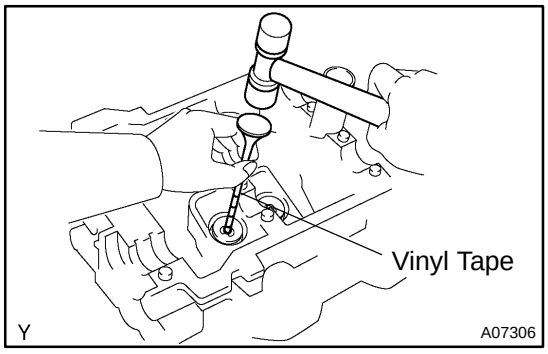

(d) Using a plastic−faced hammer and the valve stem (not in use) tip wound with vinyl tape, lightly tap the valve stem tip to assure proper fit.

NOTICE:

Be careful not to damage the valve stem tip.

3. INSTALL SHIMS AND VALVE LIFTERS

(a) Install the shim and valve lifter.

(b) Check that the valve lifter rotates smoothly by hand.

EM1X0−02

REMOVAL

1. DRAIN ENGINE COOLANT

2. REMOVE THROTTLE BODY COVER

3. DISCONNECT TIMING BELT FROM CAMSHAFT TIMING PULLEYS (See page EM−16)

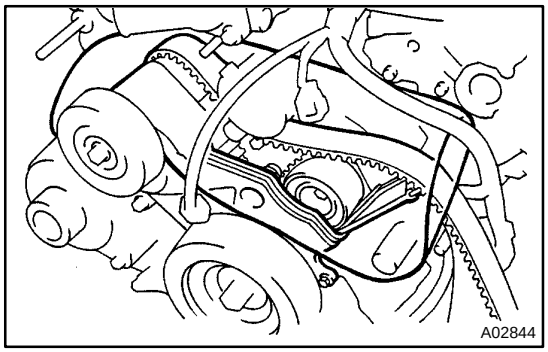

NOTICE:

- **Be careful not to drop anything inside the timing belt cover.**
- **Do not allow the belt to come into correct with oil, water or dust.**

4. REMOVE CAMSHAFT TIMING PULLEYS (See page EM−16)

5. REMOVE CAMSHAFT POSITION SENSOR (See page IG−8)

6. DISCONNECT PS PUMP FROM ENGINE (See page EM−79)

7. REMOVE FRONT EXHAUST PIPE (See page EM−126)

8. REMOVE OIL DIPSTICK AND GUIDE FOR A/T

9. REMOVE IGNITION COILS (See page IG−5)

10. REMOVE TIMING BELT REAR PLATES

(a) Remove the 3 bolts, stud bolt and RH No.1 timing belt rear plates.

(b) Disconnect the wire clamp from the LH timing belt rear plate.

(c) Remove the 3 bolts, stud bolt and LH No.1 timing belt rear plates.

11. DISCONNECT FUEL INLET HOSE (See page SF−27) AND FUEL RETURN HOSE

12. DISCONNECT CONNECTORS FROM INTAKE MANIFOLD

(a) Disconnect the throttle control connector.

(b) Disconnect the VSV connector for EVAP.

(c) Disconnect the 8 injector connectors.

(d) Disconnect the ECT sensor connector.

(e) Disconnect the 2 VSV connectors for the air injection system.

(f) Disconnect the 8 ignition coil connectors.

(g) Disconnect the 2 air fuel ratio sensor connectors.

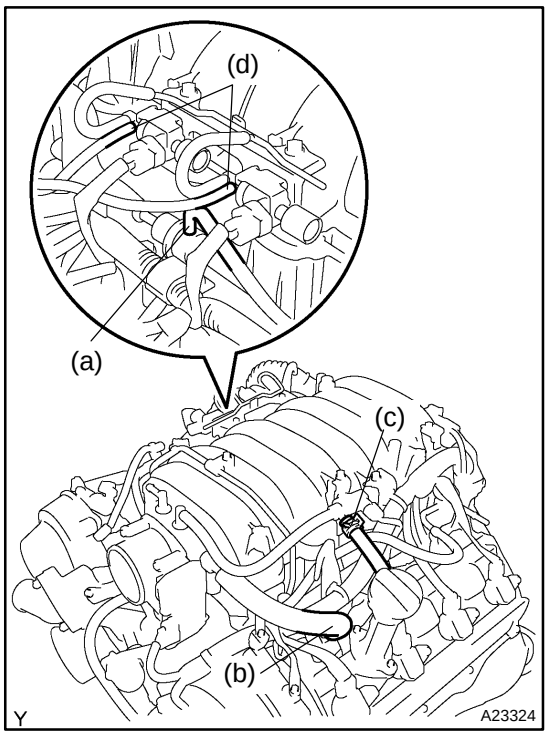

13. DISCONNECT HOSES FROM INTAKE MANIFOLD

(a) Disconnect the vacuum hose from the fuel pressure regulator.

(b) Disconnect the PCV hose from the PCV valve on the LH cylinder head.

(c) Disconnect the EVAP hose (from charcoal canister) from the VSV for the EVAP.

(d) Disconnect the 2 vacuum hoses from the VSV for the air injection system.

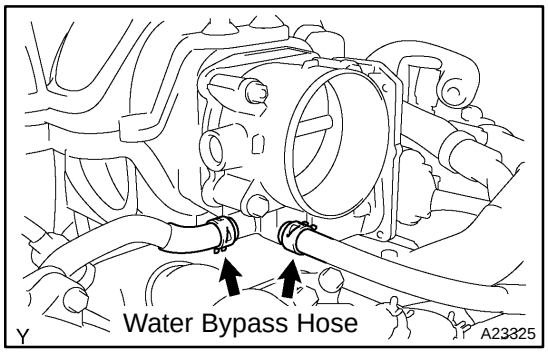

14. REMOVE INTAKE MANIFOLD ASSEMBLY

(a) Disconnect the 2 water bypass hoses from the throttle body.

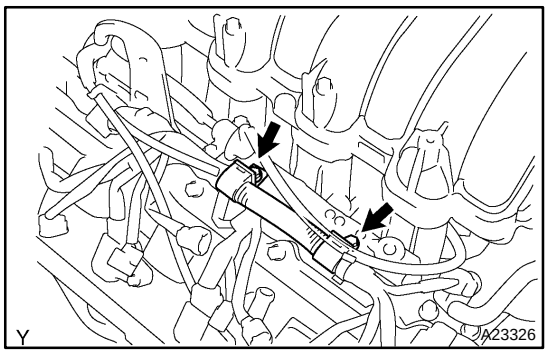

(b) Disconnect the 2 wire clamps from the wire clamp bracket on the RH delivery pipe.

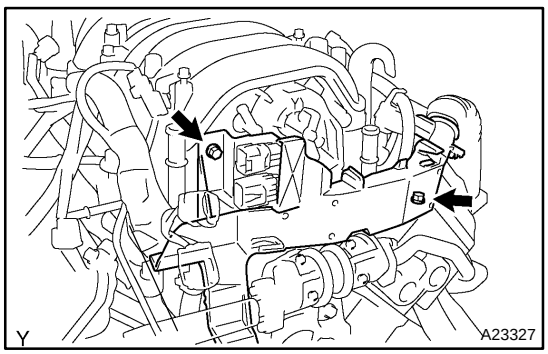

(c) Remove the 2 bolts holding the engine wire protector from the intake manifold and cylinder head.

(d) Remove the 2 bolts and ground cables from the RH and LH cylinder heads.

(e) Remove the bolt and throttle body cover bracket from the intake manifold.

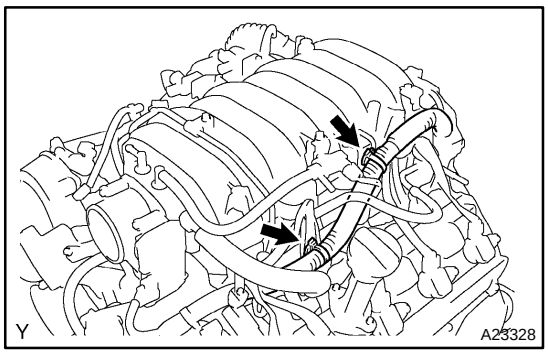

(f) Disconnect the engine wire from the engine hanger and wire bracket.
(g) Remove the wire bracket from the intake manifold.

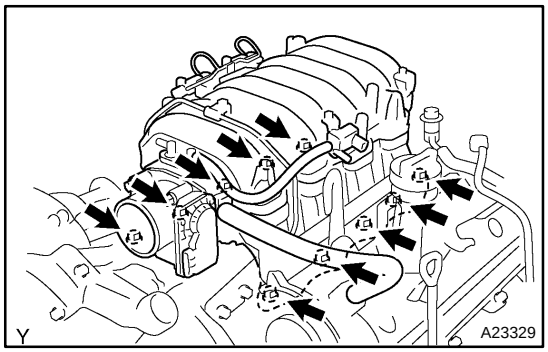

(h) Remove the 6 bolts, 4 nuts, intake manifold assembly and 2 gaskets.

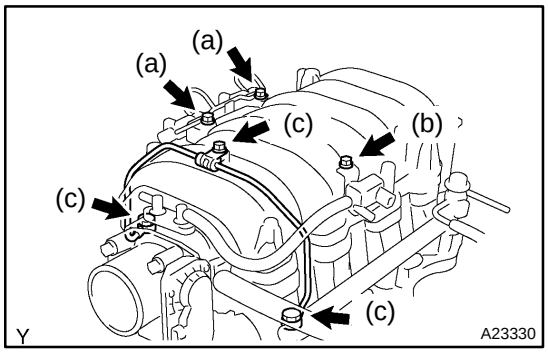

15. DISASSEMBLE INTAKE MANIFOLD

(a) Remove the 2 bolts and VSVs for the air injection system.
(b) Disconnect the EVAP hose from the upper intake manifold, and remove the VSV for EVAP.
(c) Remove the bolt, 2 unions, 4 gaskets and front fuel pipe from the intake manifold.
(d) Remove the throttle body (see page SF−44).

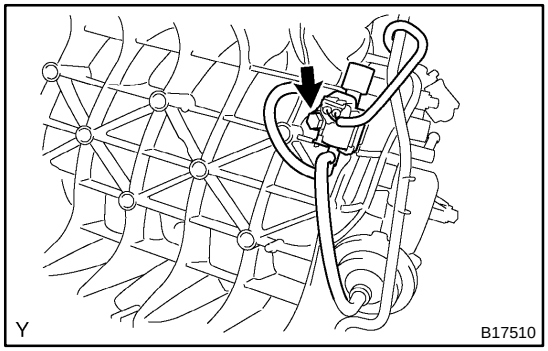

(e) Remove the bolt and VSV for ACIS from the intake manifold.

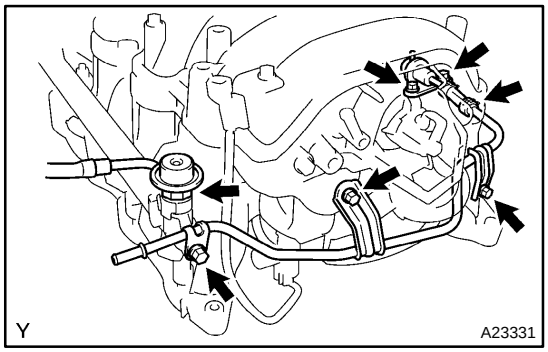

(f) Disconnect the fuel return hose from the fuel pressure regulator.
(g) Remove the 3 bolts and fuel return pipe from the intake manifold.
(h) Remove the 2 bolts, fuel pressure regulator and O−ring.
(i) Remove the fuel pressure pulsation damper and 2 gaskets.
(j) Remove the 2 delivery pipes and 8 injectors (see page SF−27).

16. REMOVE WATER INLET AND INLET HOUSING ASSEMBLY (See page CO−6)

17. REMOVE AIR PUMP ASSEMBLY (See page EC−23)

18. REMOVE NO.2 AIR SWITCHING VALVES (See page EC−23)

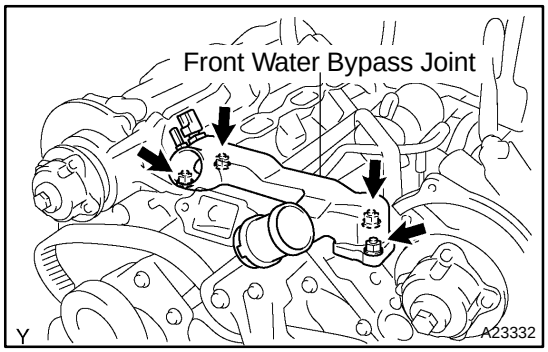

19. REMOVE FRONT WATER BYPASS JOINT

Remove the 4 nuts, water bypass joint and 2 gaskets.

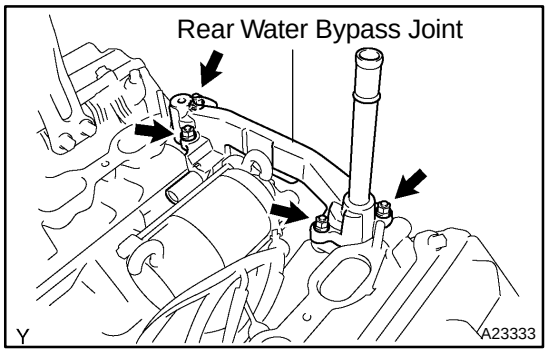

20. REMOVE REAR WATER BYPASS JOINT

Remove the 4 nuts, water bypass joint and 2 gaskets.

21. REMOVE ENGINE HANGERS

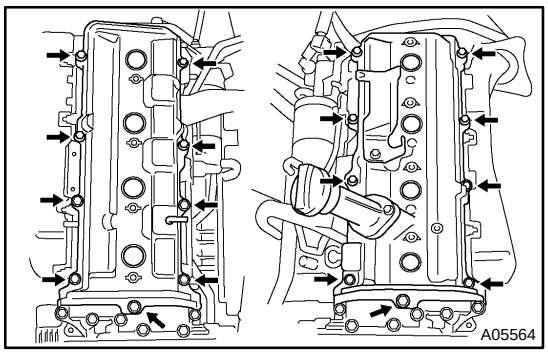

22. REMOVE CYLINDER HEAD COVERS

Remove the 18 bolts, seal washers, RH and LH cylinder head covers and 2 gaskets.

23. IF NECESSARY, REMOVE SEMI−CIRCULAR PLUGS AND CAMSHAFT HOUSING PLUGS

24. REMOVE CAMSHAFTS

NOTICE:

Since the thrust clearance of the camshaft is small, the camshaft must be kept level while it is being removed. If the camshaft is not kept level, the portion of the cylinder head receiving the shaft thrust may crack or be damaged, causing the camshaft to seize or break. To avoid this, the following steps should be carried out.

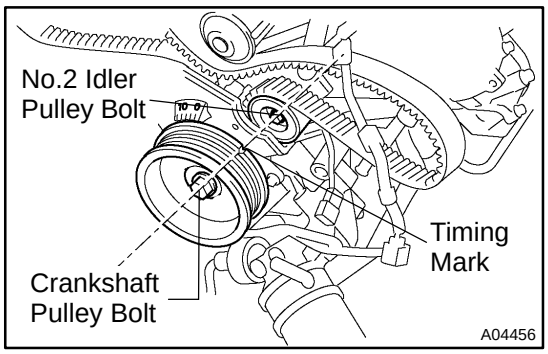

(a) Check the crankshaft pulley position.
Check that the timing mark of the crankshaft pulley is aligned with the centers of the crankshaft pulley bolt and idler pulley bolt.

NOTICE:
Having the crankshaft pulley at the wrong angle can cause the piston head and valve head to come into contact with each other when you remove the camshaft, causing damage. So always set the crankshaft pulley at the correct angle.

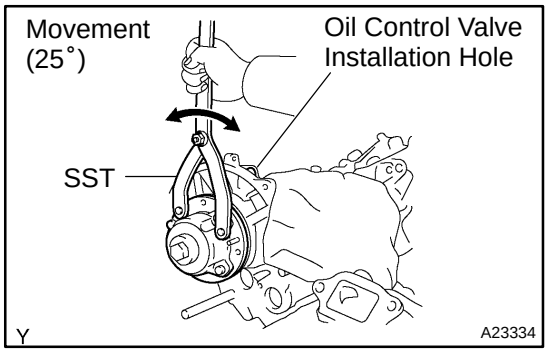

(b) Release the oil from the front bearing caps.
Using SST, rotate the camshaft timing tube from left to right 2 to 3 times within its VVT−i range (25˚) and use a waste cloth to collect the oil from the camshaft timing oil control valve installation hole.
SST 09960−10010 (09962−01000, 09963−00400)

NOTICE:
Approximately 20 cc (1.2 cu in.) of oil will be ejected. Take care not to spill it.

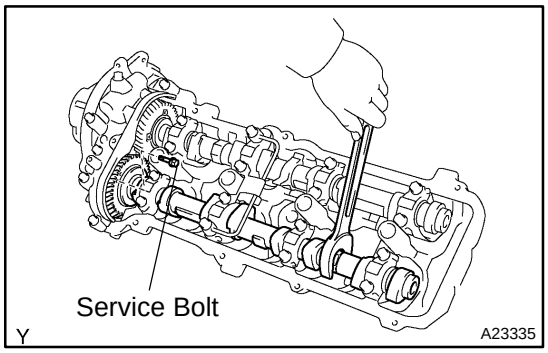

(c) Remove the LH camshafts.
(1) Bring the service bolt hole of the sub−gear upward by turning the hexagon head portion of the exhaust camshaft with a wrench.
(2) Secure the sub−gear to the main gear with a service bolt.

Recommended service bolt:

Thread diameter	6 mm
Thread pitch	1.0 mm
Bolt length	16 to 20 mm (0.63 to 0.79 in.)

HINT:
When removing the camshaft, make sure that the torsional spring force of the sub−gear has been eliminated by the above operation.

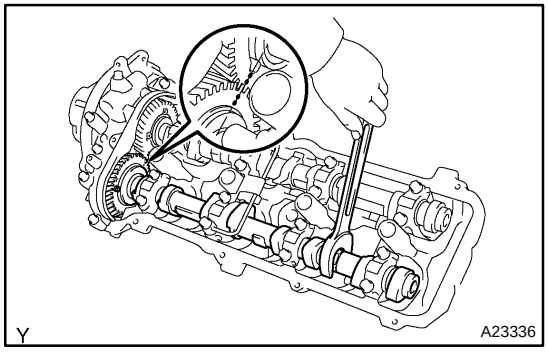

(3) Align the timing mark (2−dot mark) of the camshaft drive gear by turning the hexagon head portion of the exhaust camshaft with a wrench.

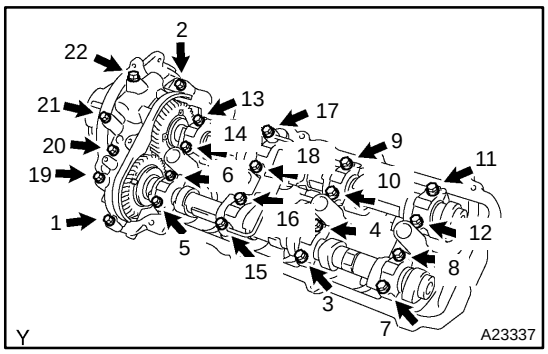

(4) Uniformly loosen the 22 bearing cap bolts in several steps, in the sequence shown.

(5) Remove the 22 bearing cap bolts, 4 seal washers, oil feed pipe, 9 bearing caps, camshaft housing plug, oil control valve filter and 2 camshafts.

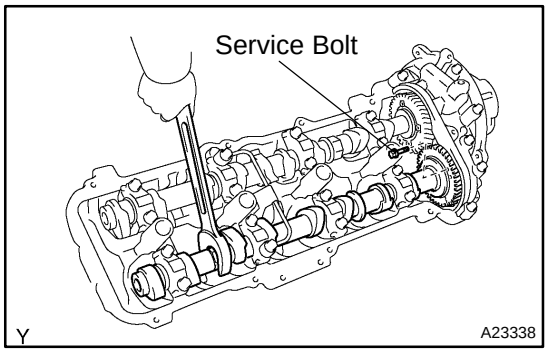

(d) Remove the RH camshafts.

(1) Bring the service bolt hole of the sub−gear upward by turning the hexagon head portion of the exhaust camshaft with a wrench.

(2) Secure the sub−gear to the main gear with a service bolt.

Recommended service bolt:

Thread diameter	6 mm
Thread pitch	1.0 mm
Bolt length	16 to 20 mm (0.63 to 0.79 in.)

HINT:

When removing the camshafts, make sure that the torsional spring force of the sub−gear has been eliminated by the above operation.

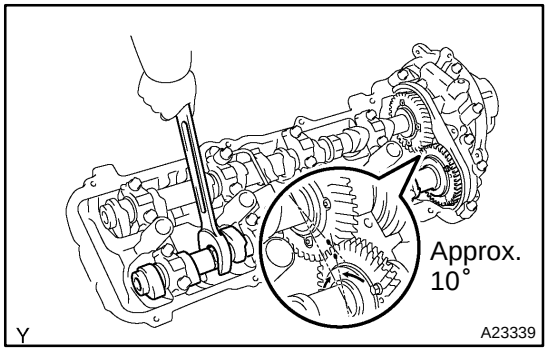

(3) Set the timing mark (1−dot mark) of the camshaft main gear at approx. 10° angle by turning the hexagon head portion of the exhaust camshaft with a wrench.

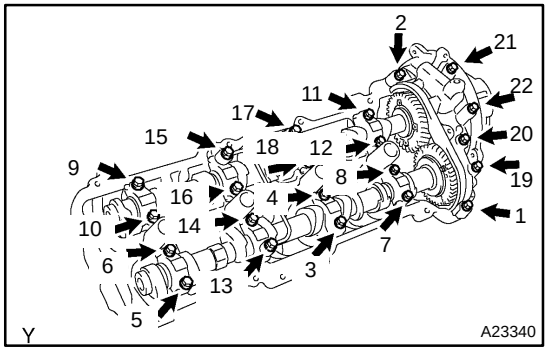

(4) Uniformly loosen the 22 bearing cap bolts in several steps, in the sequence shown.

(5) Remove the 22 bearing cap bolts, 4 seal washers, oil feed pipe, 9 bearing caps, camshaft housing plug, strainer and 2 camshafts.

HINT:

Arrange the bearing caps for RH and LH sides.

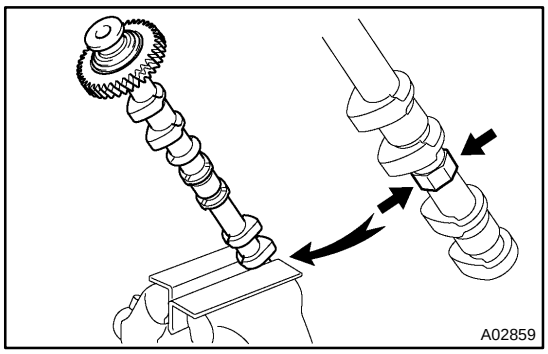

25. DISASSEMBLE EXHAUST CAMSHAFTS

(a) Mount the hexagon head portion of the camshaft in a vise.

NOTICE:

Be careful not to damage the camshaft.

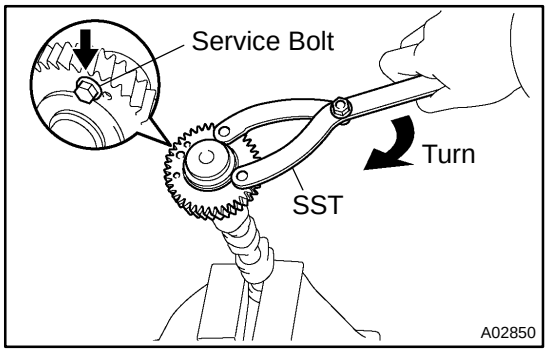

(b) Using SST, turn the sub−gear clockwise, and remove the service bolt.

SST 09960−10010 (09962−01000, 09963−00500)

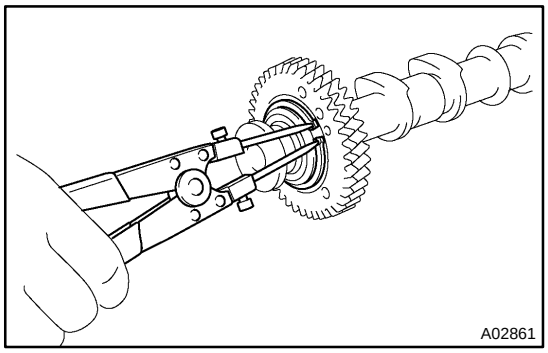

(c) Using snap ring pliers, remove the snap ring.

(d) Remove the wave washer.

(e) Remove the camshaft sub−gear.

(f) Remove the camshaft gear spring.

NOTICE:

Be careful not to damage the camshaft.

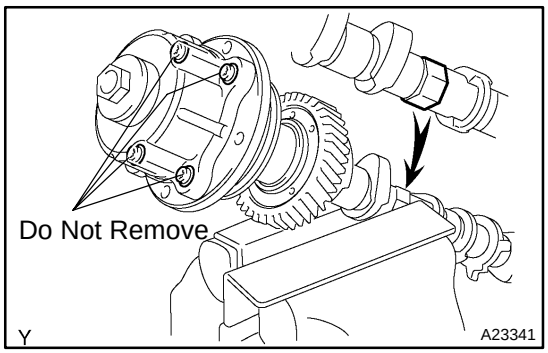

26. REMOVE CAMSHAFT TIMING TUBE FROM INTAKE CAMSHAFT

(a) Mount the hexagon head portion of the intake camshaft in a vise.

NOTICE:

- **Be careful not to damage the camshaft.**
- **The 4 bolts shown in the illustration determine backlash of the gear in the timing tube, so do not remove them. If any of the 4 bolts are removed, install a new timing tube assembly.**

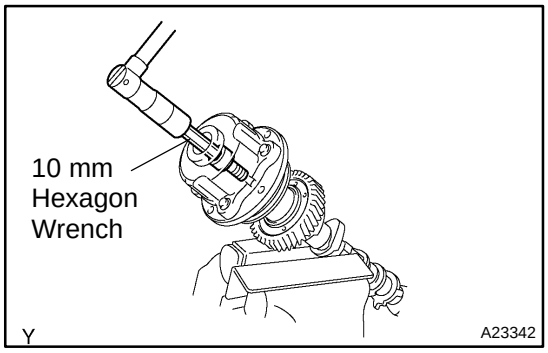

(b) Remove the screw plug and seal washer.

(c) Using a 10 mm hexagon wrench, and remove the bolt.

(d) Pull out the timing tube and drive gear assembly from the camshaft.

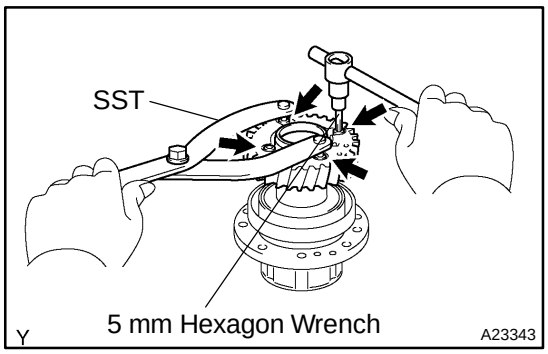

(e) Using SST and a 5 mm hexagon wrench, remove the 4 bolts, drive gear and oil seal.
SST 09960−10010 (09962−01000, 09963−00500)

NOTICE:

Be careful not to damage the timing tube.

27. REMOVE SPARK PLUGS

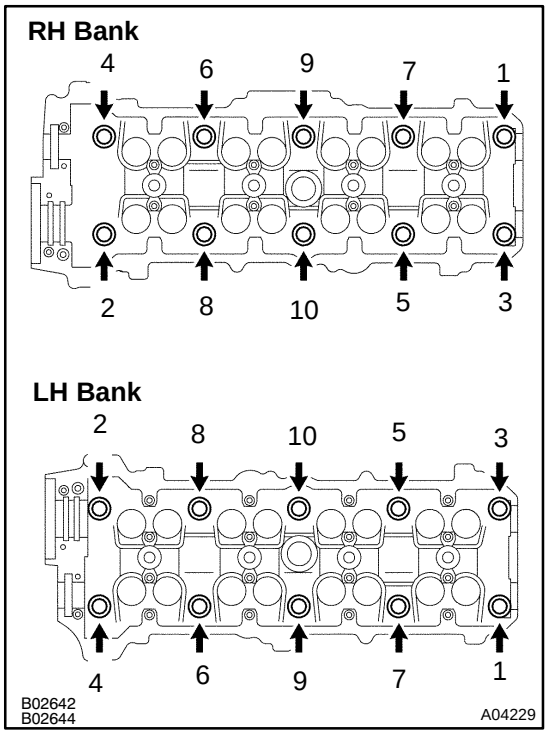

28. REMOVE CYLINDER HEAD AND EXHAUST MANIFOLD ASSEMBLIES

(a) Uniformly loosen the 10 cylinder head bolts on one side of each cylinder head in several steps, in the sequence shown, then perform the same procedure to the other side as shown. Remove the 20 cylinder head bolts and plate washers.

NOTICE:

- **Cylinder head warpage or cracking could result from removing bolts in incorrect order.**

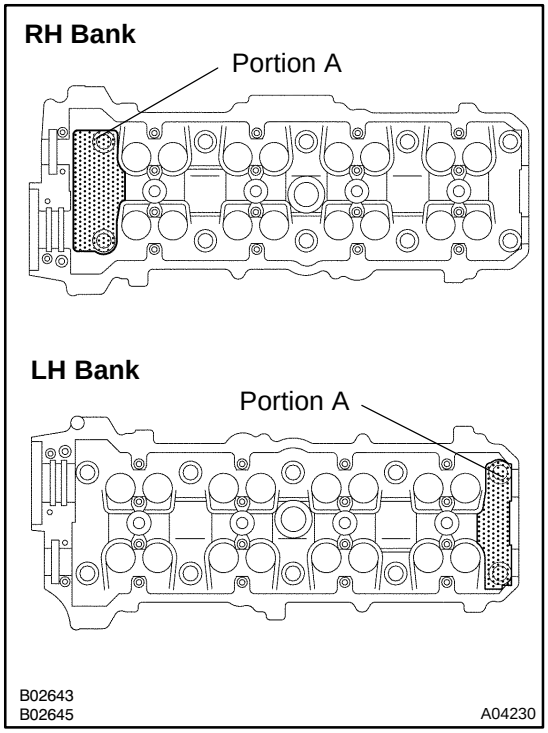

- **Do not drop the plate washer for cylinder head bolt into portion A of the cylinder head. If dropped into portion A, the plate washer will pass through the cylinder head and cylinder block into the oil pan.**

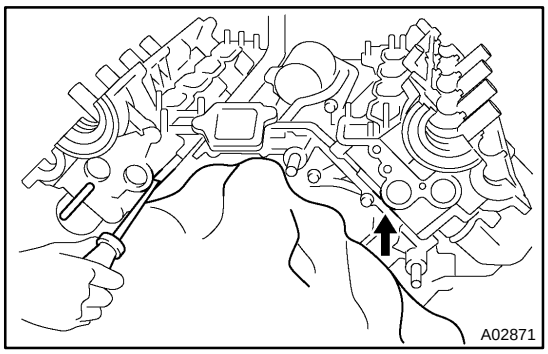

(b) Lift the cylinder head from the dowels on the cylinder block, and place the 2 cylinder heads on wooden blocks on a bench.

HINT:

If the cylinder head is difficult to lift off, pry between the cylinder head and cylinder block with a screwdriver.

NOTICE:

- **Be careful not to damage the contact surfaces of the cylinder head and cylinder block.**
- **The cylinder head should not be tilted so as to secure the valve lifter. If the cylinder head is tilted, remove the valve lifter and check that the adjusting shim is set correctly.**

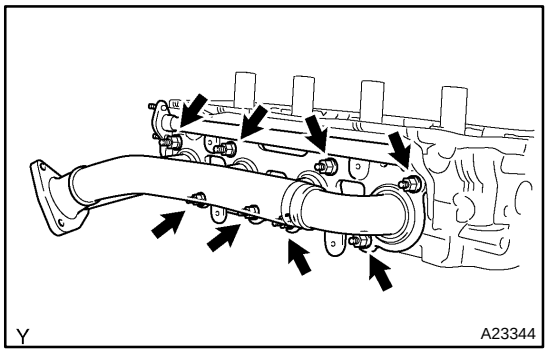

29. REMOVE RH EXHAUST MANIFOLD FROM CYLINDER HEAD

(a) Remove the 4 bolts and heat insulator.

(b) Remove the 8 nuts, exhaust manifold and gasket.

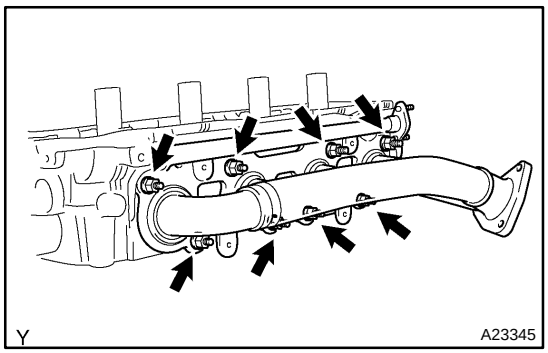

30. REMOVE LH EXHAUST MANIFOLD FROM CYLINDER HEAD

(a) Remove the 4 bolts and heat insulator.

(b) Remove the 8 nuts, exhaust manifold and gasket.

EM0L3−10

REPLACEMENT

1. REPLACE VALVE GUIDE BUSHINGS

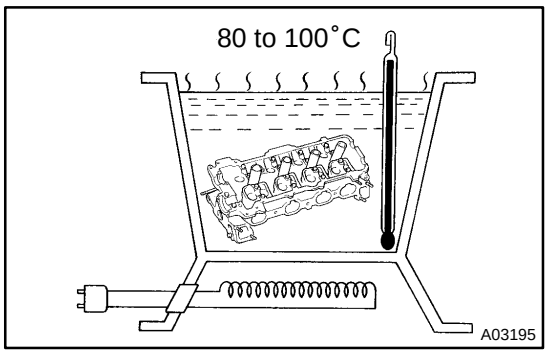

(a) Gradually heat the cylinder head to 80 to 100˚C (176 to 212˚F).

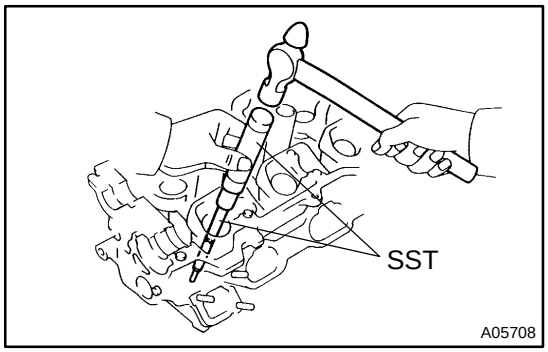

(b) Using SST and a hammer, tap out the guide bushing.
SST 09201−01055, 09950−70010 (09951−07100)

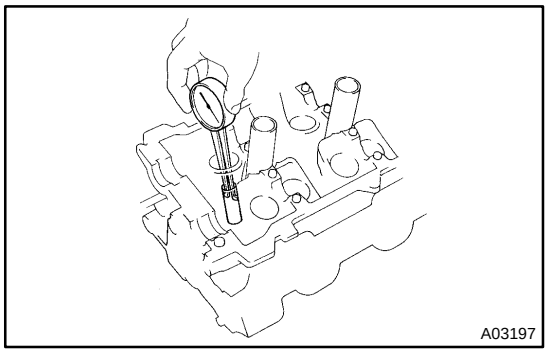

(c) Using a caliper gauge, measure the bushing bore diameter of the cylinder head.

Both intake and exhaust

Bushing bore diameter mm (in.)	Bushing size
10.285 to 10.306 (0.4049 to 0.4057)	Use STD
10.335 to 10.356 (0.4069 to 0.4077)	Use O/S STD

(d) Select a new guide bushing (STD or O/S 0.05).

If the bushing bore diameter of the cylinder head is greater than 10.306 mm (0.4057 in.), machine the bushing bore to the following dimension:

10.335 to 10.356 mm (0.4069 to 0.4077 in.)

If the bushing bore diameter of the cylinder head is greater than 10.356 mm (0.4077 in.), replace the cylinder head.

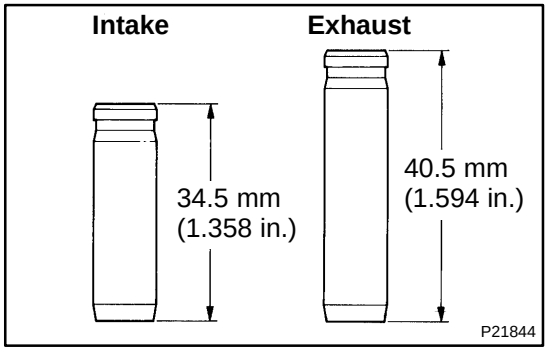

HINT:

Different the bushings are used for the intake and exhaust.

(e) Gradually heat the cylinder head to 80 to 100˚C (176 to 212˚F).

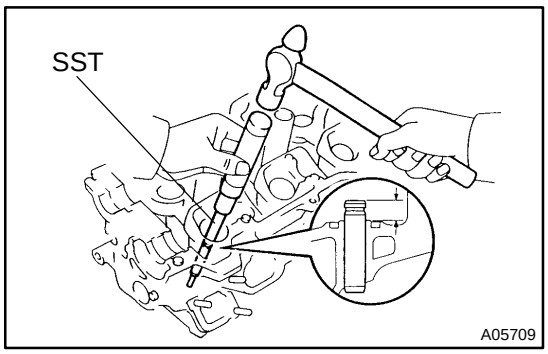

(f) Using SST and a hammer, tap in a new guide bushing to the specified protrusion height.

Protrusion height:

Intake	9.2 to 9.8 mm (0.362 to 0.386 in.)
Exhaust	8.2 to 8.8 mm (0.323 to 0.346 in.)

SST 09201−01055, 09950−70010 (09951−07100)

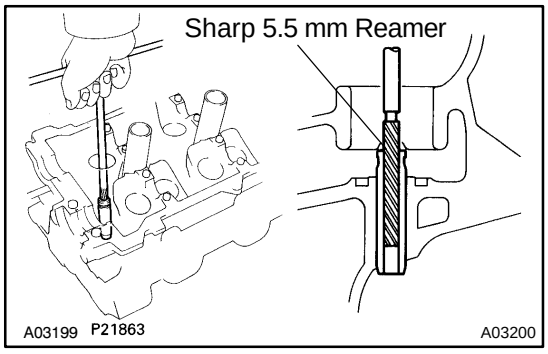

(g) Using a sharp 5.5 mm reamer, ream the guide bushing to obtain the standard specified clearance (see page EM−46) between the guide bushing and valve stem.

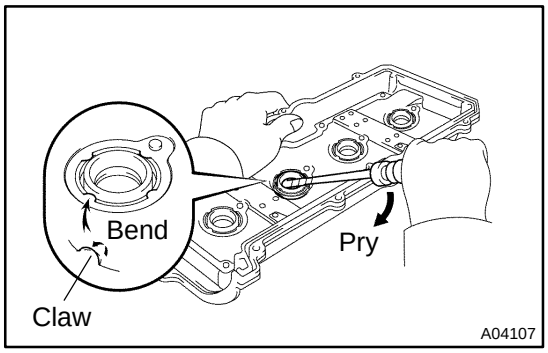

2. REPLACE SPARK PLUG TUBE GASKETS

(a) Bend the 4 ventilation case claws installed on the cylinder head cover to an angle of 90° or more.

(b) Using a screwdriver, pry out the gasket.

NOTICE:

Be careful not to damage the cylinder head cover. Tape the screwdriver tip.

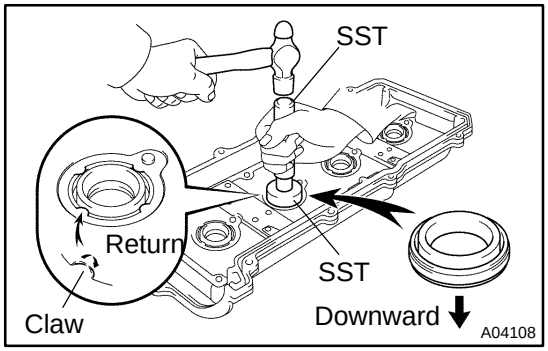

(c) Using SST and a hammer, tap in a new gasket until its surface is flush with the upper edge of the cylinder head cover.

SST 09950−60010 (09951−00240, 09951−00440, 09952−06010), 09950−70010 (09951−07100)

NOTICE:

Be careful of the installation direction.

(d) Apply a light coat of MP grease to the gasket lip.

(e) Return the 4 ventilation case claws to its original position.

ENGINE UNIT (2WD)

EM11Z−08

COMPONENTS

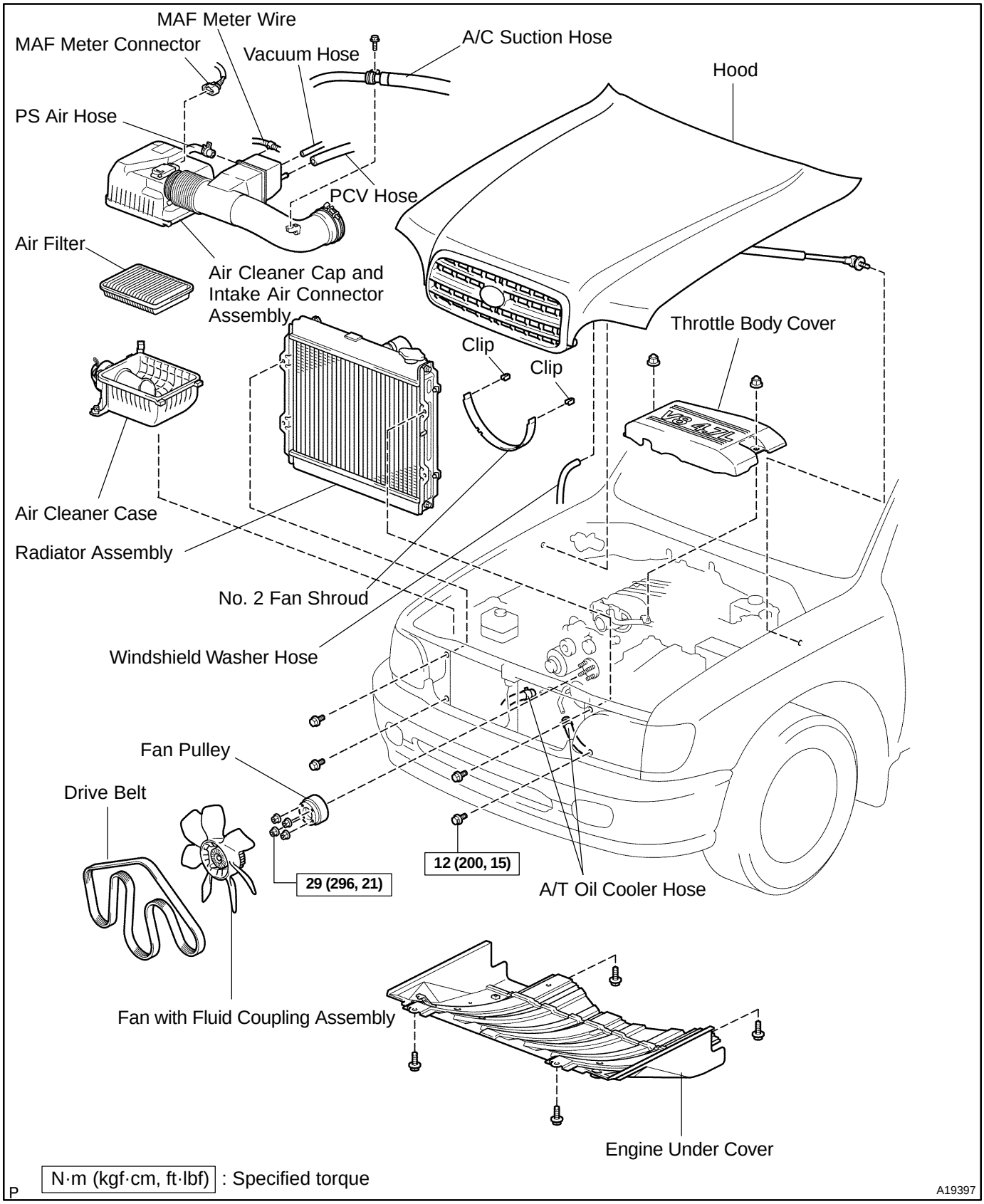

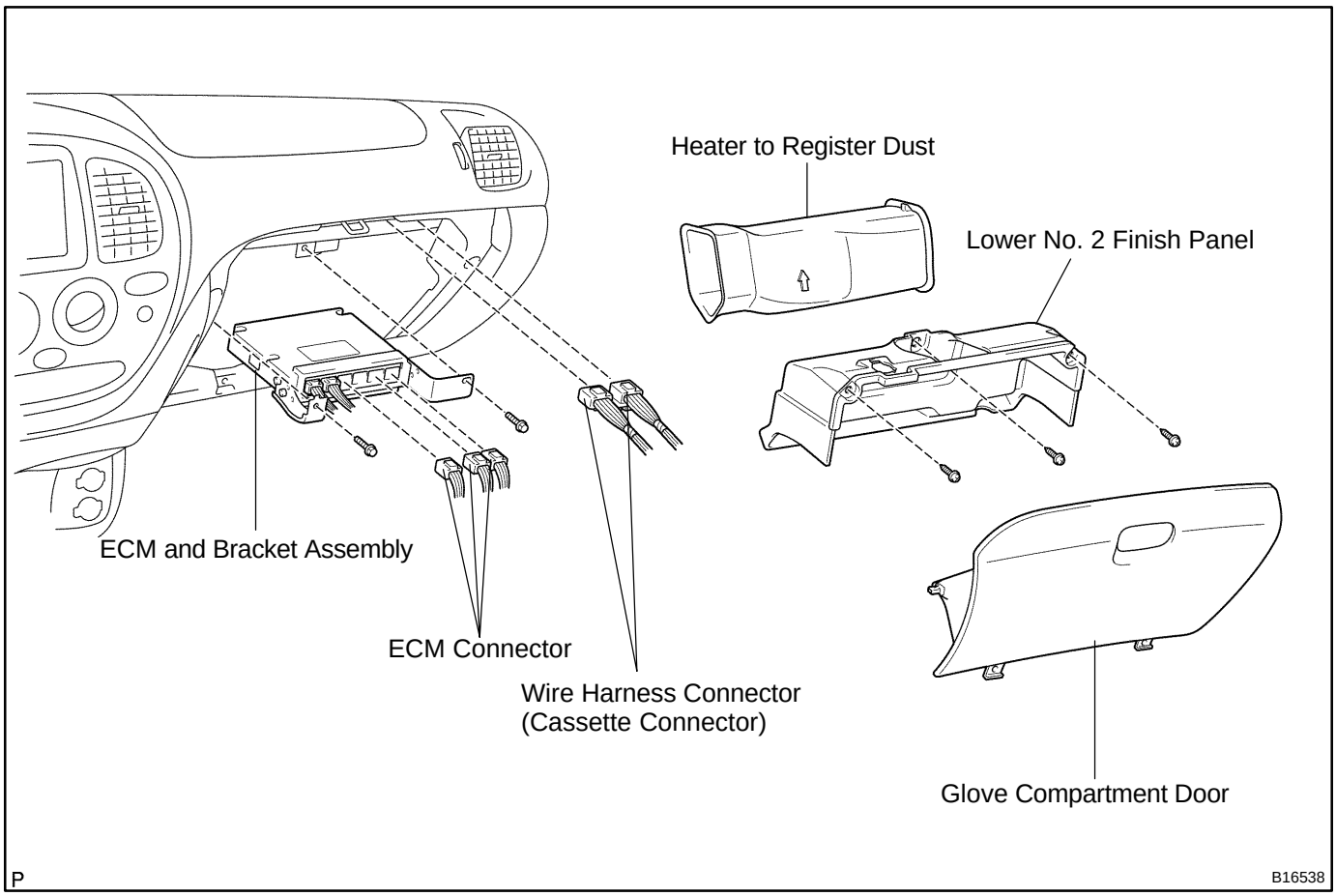
Heater to Register Dust
Lower No. 2 Finish Panel
ECM and Bracket Assembly
ECM Connector
Wire Harness Connector
(Cassette Connector)
Glove Compartment Door
P
B16538

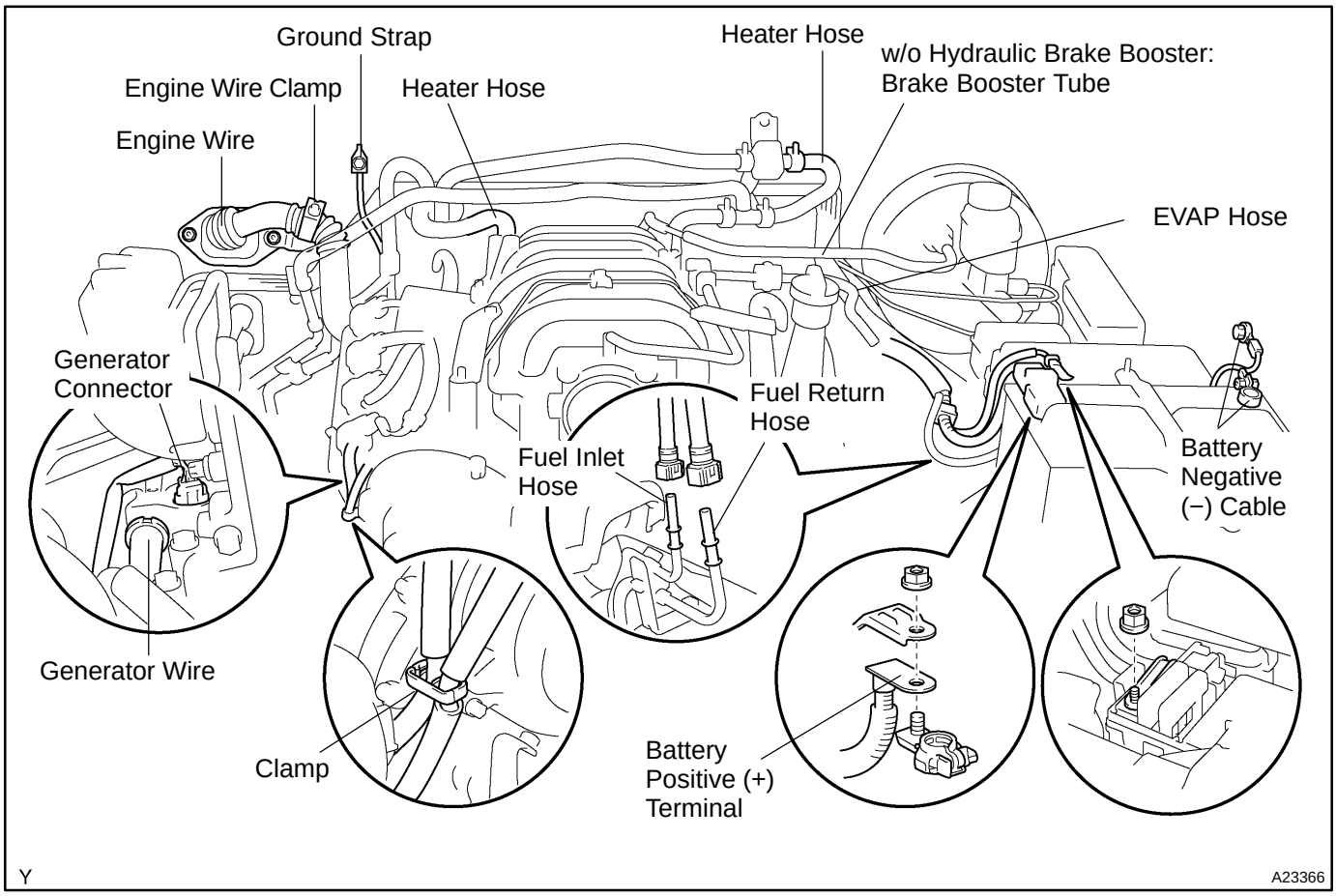
Ground Strap
Heater Hose
w/o Hydraulic Brake Booster:
Brake Booster Tube
Engine Wire Clamp
Heater Hose
Engine Wire
EVAP Hose
Generator
Connector
Fuel Return
Hose
Fuel Inlet
Hose
Battery
Negative
(−) Cable
Generator Wire
Clamp
Battery
Positive (+)
Terminal
Y
A23366

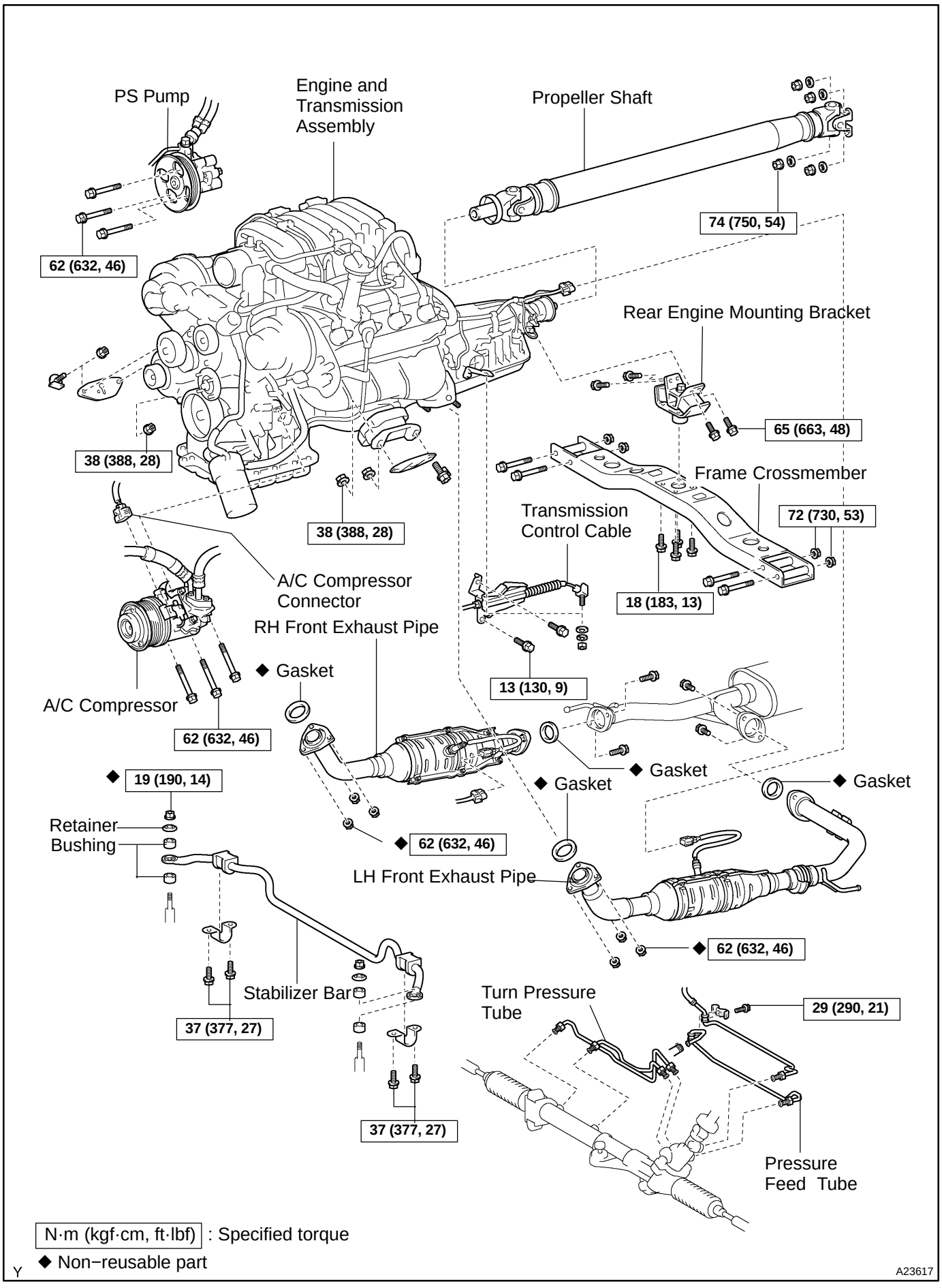
PS Pump
Engine and Transmission Assembly
Propeller Shaft
62 (632, 46)
74 (750, 54)
Rear Engine Mounting Bracket
65 (663, 48)
38 (388, 28)
38 (388, 28)
Frame Crossmember
72 (730, 53)
Transmission Control Cable
18 (183, 13)
A/C Compressor Connector
RH Front Exhaust Pipe
◆ Gasket
A/C Compressor
62 (632, 46)
13 (130, 9)
◆ Gasket
◆ Gasket
◆ Gasket
◆ 19 (190, 14)
Retainer
Bushing
◆ 62 (632, 46)
LH Front Exhaust Pipe
◆ 62 (632, 46)
Stabilizer Bar
37 (377, 27)
Turn Pressure Tube
29 (290, 21)
37 (377, 27)
Pressure Feed Tube
N·m (kgf·cm, ft·lbf) : Specified torque
◆ Non−reusable part
Y
A23617

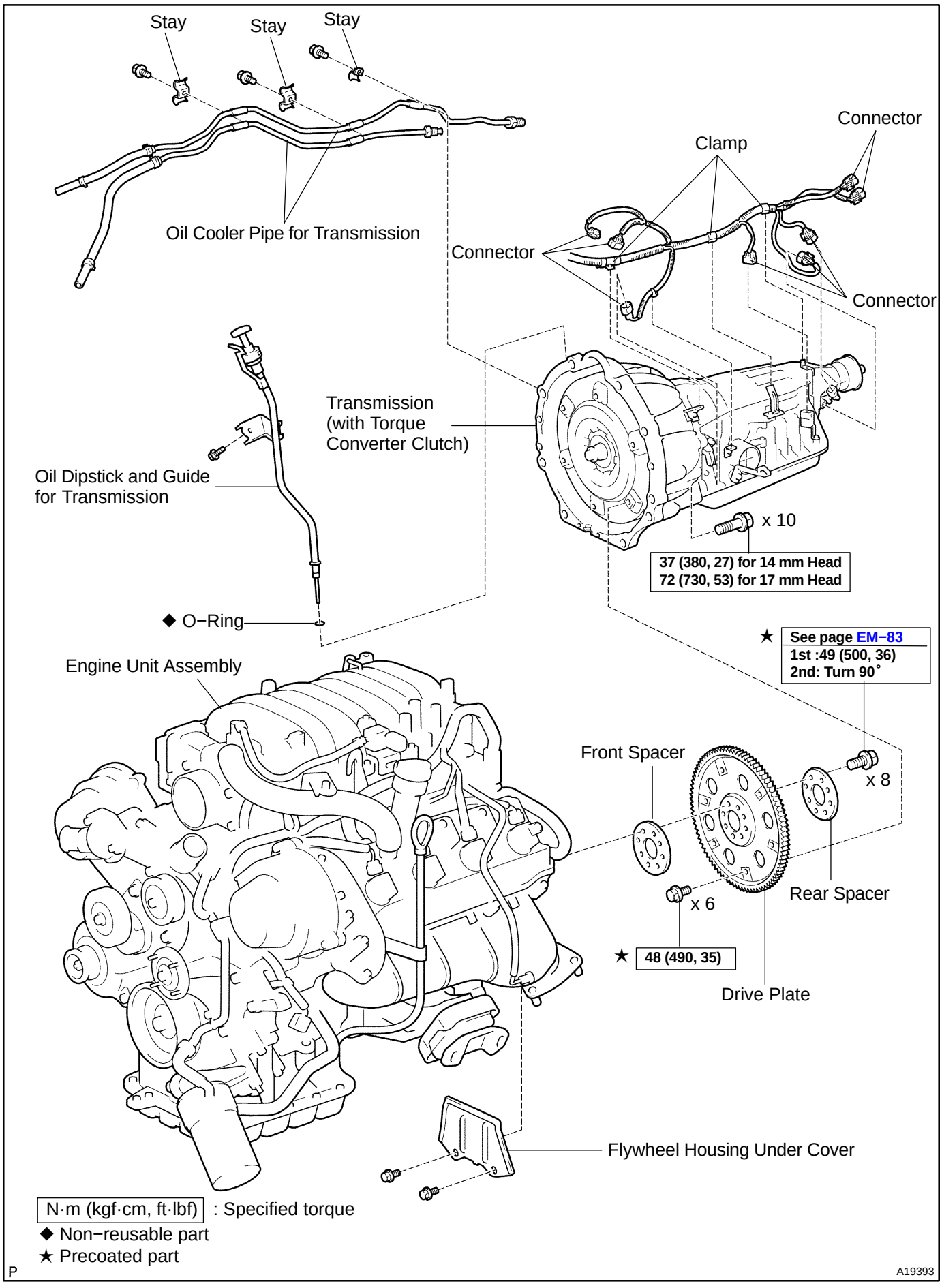
Stay
Stay
Stay
Oil Cooler Pipe for Transmission
Connector
Clamp
Connector
Connector
Transmission
(with Torque
Converter Clutch)
Oil Dipstick and Guide
for Transmission
x 10
37 (380, 27) for 14 mm Head
72 (730, 53) for 17 mm Head
◆ O−Ring
★ See page EM−83
1st :49 (500, 36)
2nd: Turn 90°
Engine Unit Assembly
Front Spacer
x 8
Rear Spacer
x 6
★ 48 (490, 35)
Drive Plate
Flywheel Housing Under Cover
N·m (kgf·cm, ft·lbf) : Specified torque
◆ Non−reusable part
★ Precoated part
P
A19393

EM121−08

INSTALLATION

1. INSTALL DRIVE PLATE

HINT:

- The mounting bolts are tightened in 2 progressive steps (steps (c) and (e)).
- If any one of the mounting bolts is broken or deformed, replace it.

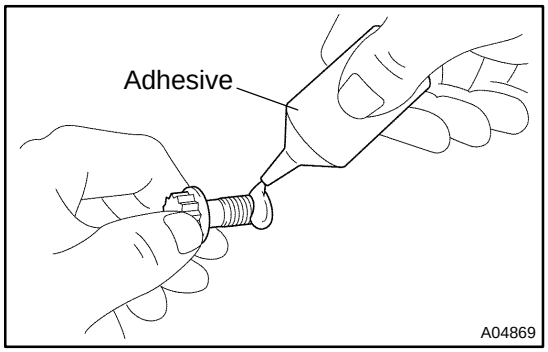

(a) Apply adhesive to 2 or 3 threads of the mounting bolt end.
Adhesive:
Part No. 08833−00070, THREE BOND 1324 or equivalent

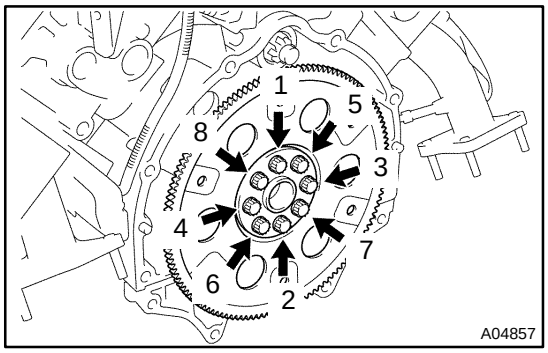

(b) Install the front spacer, drive plate and rear spacer on the crankshaft.
(c) Install and uniformly tighten the 8 mounting bolts in several passes, in the sequence shown.
Torque: 49 N·m (500 kgf·cm, 36 ft·lbf)

If any one of the mounting bolts does not meet the torque specification, replace the mounting bolt.

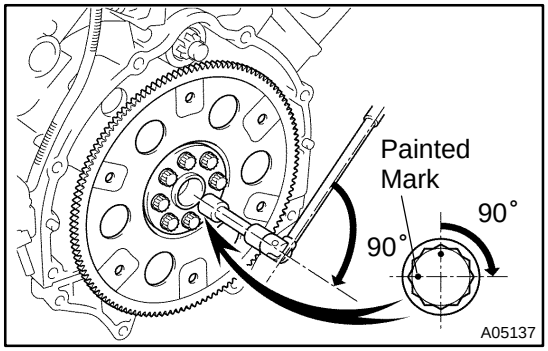

(d) Mark the mounting bolt with paint.
(e) Retighten the mounting bolts by 90° in the numerical order shown.
(f) Check that the painted mark is now at a 90° angle to (e).

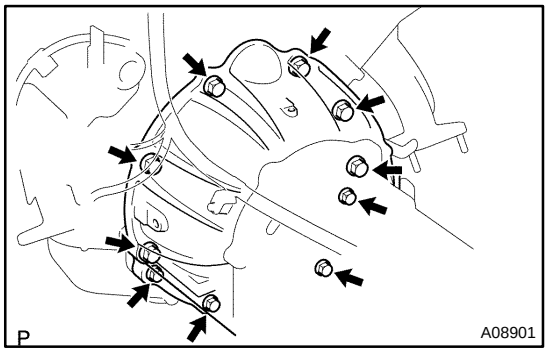

2. INSTALL TRANSMISSION TO ENGINE

(a) Check the torque converter clutch installation (See page AT−38).
(b) Attach the transmission to the engine.
(c) Install the 10 bolts.
Torque:
37 N·m (380 kgf·cm, 27 ft·lbf) for 14 mm head
72 N·m (730 kgf·cm, 53 ft·lbf) for 17 mm head

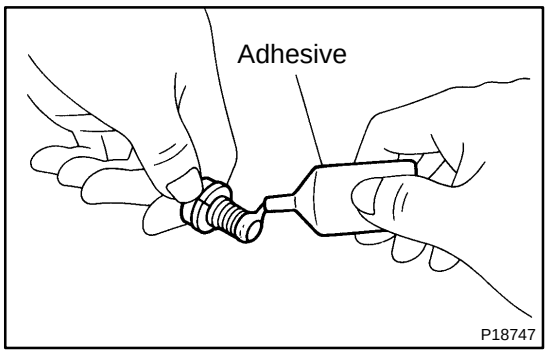

3. INSTALL TORQUE CONVERTER CLUTCH BOLTS

(a) Apply adhesive to 2 or 3 threads of the bolt end.
Adhesive:
Part No. 08833−00070, THREE BOND 1324 or equivalent

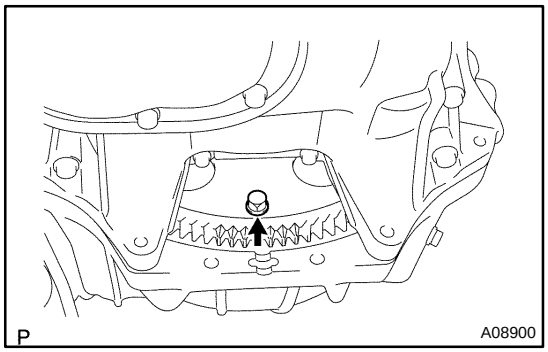

(b) Hold the crankshaft pulley bolt with a wrench, and install the 6 bolts evenly.
Torque: 48 N·m (490 kgf·cm, 35 ft·lbf)

HINT:
First install the black colored bolt, install the other bolts.

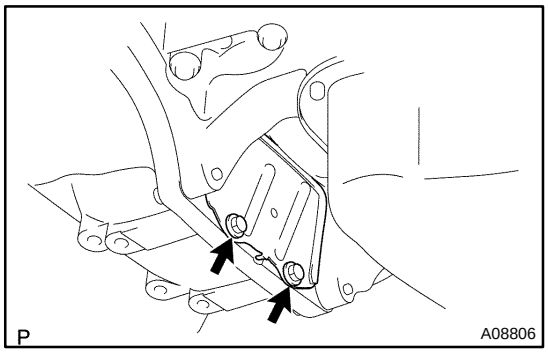

(c) Install the flywheel housing under cover with the 2 bolts.
Torque: 18 N·m (185 kgf·cm, 13 ft·lbf)

4. INSTALL OIL COOLER PIPE FOR TRANSMISSION

5. INSTALL OIL DIPSTICK GUIDE AND DIPSTICK FOR TRANSMISSION

(a) Install a new O−ring to the dipstick guide.
(b) Apply soapy water to the O−ring.
(c) Connect the dipstick guide end to the dipstick tube of the oil pan.
(d) Install the dipstick guide with the bolt.
(e) Install the dipstick.
(f) Connect the 2 breather hoses to the dipstick guide.

6. CONNECT ENGINE WIRE TO TRANSMISSION

(a) Connect the 5 connectors.
(b) Connect the 2 wire clamps.

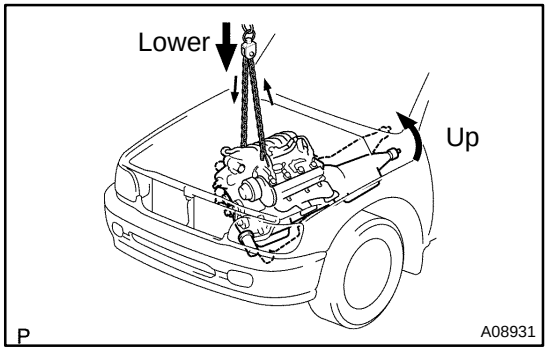

7. INSTALL ENGINE AND TRANSMISSION ASSEMBLY IN VEHICLE

(a) Attach the engine chain hoist to the engine hangers.
(b) Slowly lower the engine and transmission assembly into the engine compartment.
(c) Attach the engine mounting brackets to the frame brackets.

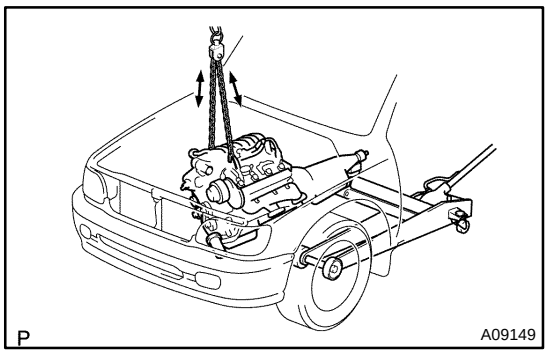

(d) Keep the engine level with a jack.

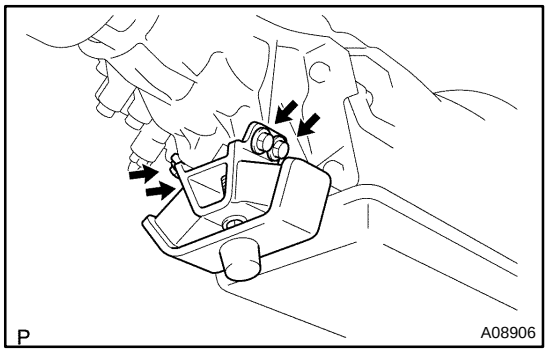

8. INSTALL ENGINE REAR MOUNTING BRACKET

(a) Install the engine rear mounting bracket to the transmission with the 4 bolts.
Torque: 65 N·m (663 kgf·cm, 48 ft·lbf)

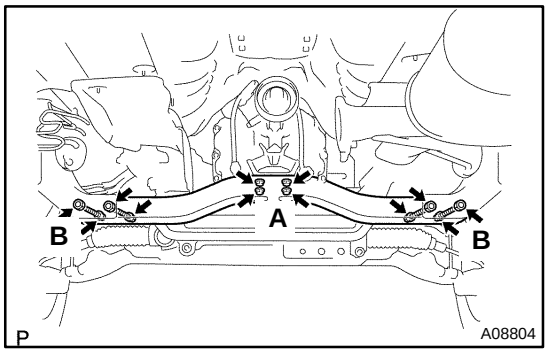

(b) Install the frame crossmember with the 8 bolts and 4 nuts.
Torque:
18 N·m (183 kgf·cm, 13 ft·lbf) for bolts (A)
72 N·m (730 kgf·cm, 53 ft·lbf) for nuts (B)

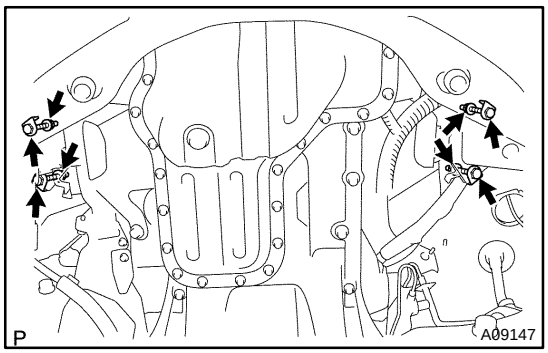

9. INSTALL ENGINE MOUNTING BRACKETS

(a) Install the engine mounting brackets to the frame brackets with the 2 nuts and 4 bolts.
Torque: 38 N·m (388 kgf·cm, 28 ft·lbf)

(b) Remove the engine chain hoist.

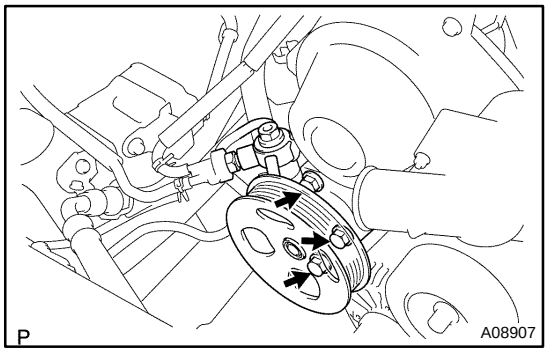

10. INSTALL PS PUMP

Install the PS pump with the 3 bolts.
Torque: 17 N·m (175 kgf·cm, 13 ft·lbf)

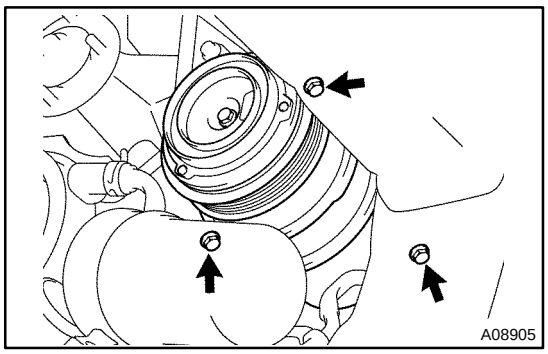

11. INSTALL A/C COMPRESSOR

(a) Install the A/C compressor with the 3 bolts.
Torque: 49 N·m (500 kgf·cm, 36 ft·lbf)

(b) Connect the A/C compressor connector.

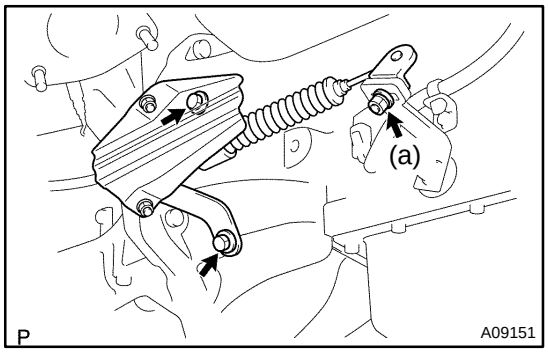

12. INSTALL TRANSMISSION CONTROL CABLE

(a) Install the control cable to the control shift lever.
Torque: 13 N·m (130 kgf·cm, 9 ft·lbf)

(b) Install the control cable bracket to the transmission with the 2 bolts.

13. CONNECT POWER STEERING GEAR PIPES

Connect the pressure feed tube, turn tube and turn pressure tubes to the PS gear assembly (See page SR−88).

14. INSTALL FRONT STABILIZER BAR (See page SA−91)

15. INSTALL PROPELLER SHAFT (See page PR−8)

16. INSTALL FRONT EXHAUST PIPES (See page EM−125)

17. CONNECT HOSES, WIRES, CONNECTORS, CLAMPS, GROMMET AND CABLES

(a) Connect the 2 PS air hoses to hose clamp on the No. 3 RH timing belt cover.
(b) Connect the generator wire.
(c) Connect the generator connector.
(d) Connect the hose clamp for the PS air hose.
(e) Connect the PS air hose to the upper intake manifold.
(f) Connect the 2 heater hoses.
(g) Connect the ground strap connector.
(h) Connect the fuel inlet hose and clamps.
(i) Connect the fuel return hose and clamp.
(j) Connect the air inlet hose to the charcoal canister.
(k) Connect the EVAP hose to the VSV for EVAP.
(l) w/o Hydraulic brake booster:
Connect the brake booster tube.

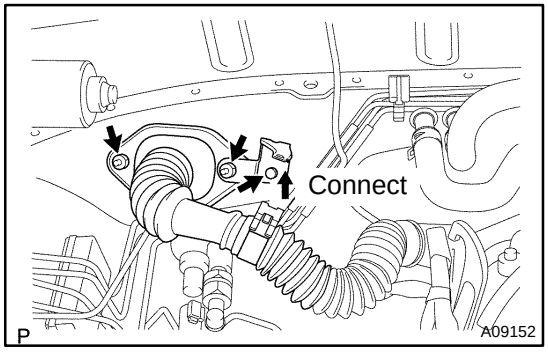

18. CONNECT ENGINE WIRE TO CABIN

(a) Push into the engine wire through the cowl panel.
(b) Install the engine wire bracket with the 2 nuts and bolt and connect the engine wire to the bracket.
(c) Connect the 2 wire harness connectors (cassette connector).
(d) Connect the 3 connectors to the ECM.
(e) Install the ECM with the 3 screws.
(f) Install the lower No. 2 panel.
(g) Install the glove compartment door.

19. INSTALL FAN PULLEY, FAN, FLUID COUPLING AND DRIVE BELT

(a) Temporarily install the fan pulley, the fan and fluid coupling assembly with the 4 nuts.

(b) Install the drive belt (See page CH−16 or CH−28).

(c) Tighten the 4 nuts holding the fluid coupling to the fan bracket.

20. INSTALL BATTERY CABLES

(a) Connect the clamp on battery negative (−) cable to No.2 relay box.

(b) Connect the battery positive (+) terminal cable.

(c) Connect the battery negative cable to the left fender apron.

21. INSTALL AIR CLEANER AND INTAKE AIR CONNECTOR ASSEMBLY

(a) Install the air cleaner with the 3 bolt.
Torque: 5 N·m (51 kgf·cm, 44 in.·lbf)

(b) Connect the intake air connector to the throttle body.

(c) Connect the MAF meter connector.

(d) Install the A/C suction hose to the intake air connector.

(e) Connect the PS air hose, air inlet hose for EVAP, PCV hose and MAF meter wire to the air intake connector.

22. INSTALL THROTTLE BODY COVER

23. INSTALL RADIATOR ASSEMBLY (See page CO−18)

24. FILL WITH ENGINE COOLANT (See page CO−2)

25. FILL WITH ENGINE OIL (See page LU−2)

26. START ENGINE AND CHECK FOR LEAKS

27. INSTALL ENGINE UNDER COVER

28. INSTALL HOOD

29. PERFORM ROAD TEST

Check for abnormal noise, shock, slippage, correct shift points and smooth operation.

30. RECHECK ENGINE COOLANT AND OIL LEVELS

EM120−05

REMOVAL

1. REMOVE ENGINE HOOD

2. REMOVE ENGINE UNDER COVER

3. DRAIN ENGINE COOLANT

4. REMOVE RADIATOR ASSEMBLY (See page CO−17)

5. REMOVE THROTTLE BODY COVER

6. REMOVE AIR CLEANER AND INTAKE AIR CONNECTOR ASSEMBLY

(a) Disconnect the MAF meter connector.

(b) Loosen the 3 bolts, and remove the air cleaner case.

(c) Remove the A/C suction hose from the intake air connector.

(d) Disconnect the PS air hose, air inlet hose for EVAP, PCV hose and MAF meter wire from the air intake connector.

(e) Disconnect the intake air connector from the throttle body.

7. DISCONNECT BATTERY CABLES

(a) Disconnect the clamp on battery negative (−) cable from the No. 2 relay box.

(b) Disconnect the battery positive (+) terminal cable.

(c) Disconnect battery negative (−) cable from the left fender apron.

8. REMOVE DRIVE BELT, FAN, FLUID COUPLING AND FAN PULLEY

(a) Loosen the 4 nuts holding the fluid coupling to the fan bracket.

(b) Remove the drive belt (See page CH−7 or CH−19).

(c) Remove the 4 nuts, the fan, fluid coupling assembly and fan pulley.

9. DISCONNECT ENGINE WIRE FROM CABIN

(a) Remove the glove compartment door.

(b) Remove the lower No. 2 panel.

(c) Remove the 3 screws, and disconnect the ECM from the body bracket.

(d) Disconnect the 3 wire harness connectors from the ECM.

(e) Disconnect the 2 wire harness connectors (cassette connector).

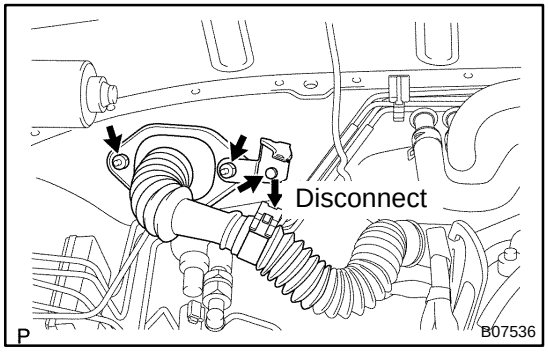

(f) Disconnect the engine wire from the engine wire bracket and remove the bolt, 2 nuts and bracket.

(g) Pull out the engine wire from the cowl panel.

10. DISCONNECT HOSES, WIRES, CONNECTORS, CLAMPS, GROMMET AND CABLES

(a) Disconnect the 2 PS air hoses from hose clamp on the No. 3 RH timing belt cover.

(b) Disconnect the generator wire.

(c) Disconnect the generator connector.

(d) Disconnect the hose clamp for the PS air hose.

(e) Disconnect the PS air hose from the upper intake manifold.
(f) Disconnect the 2 heater hoses.
(g) Disconnect the ground strap from the cowl panel.
(h) Disconnect the fuel inlet hose and clamps.
(i) Disconnect the fuel return hose and clamp.
(j) Disconnect the air inlet hose from the charcoal canister.
(k) Disconnect the EVAP hose from the VSV for EVAP.
(l) w/o Hydraulic brake booster:
Disconnect the brake booster tube.

11. REMOVE FRONT EXHAUST PIPES (See page EM−125)

12. REMOVE PROPELLER SHAFT (See page PR−3)

13. REMOVE FRONT STABILIZER BAR (See page SA−89)

14. DISCONNECT POWER STEERING GEAR PIPES

Disconnect the pressure feed tube, turn tube and pressure tubes from the PS gear assembly (See page SR−73).

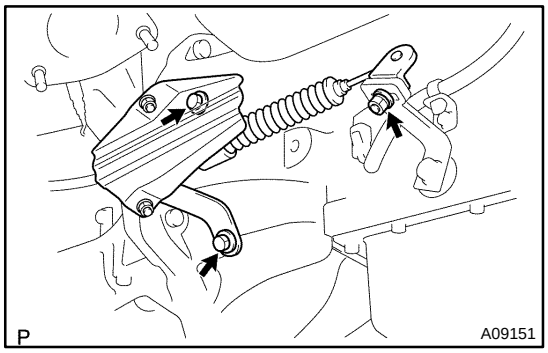

15. REMOVE TRANSMISSION CONTROL CABLE

(a) Remove the 2 bolts and control cable bracket from the transmission.
(b) Remove the control cable from the control shift lever.

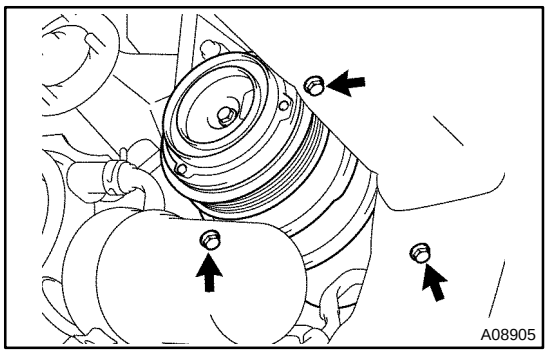

16. DISCONNECT A/C COMPRESSOR FROM ENGINE

(a) Disconnect the A/C compressor connector.
(b) Remove the 3 bolts, and disconnect the A/C compressor from the engine.

HINT:
Suspend the A/C compressor securely.

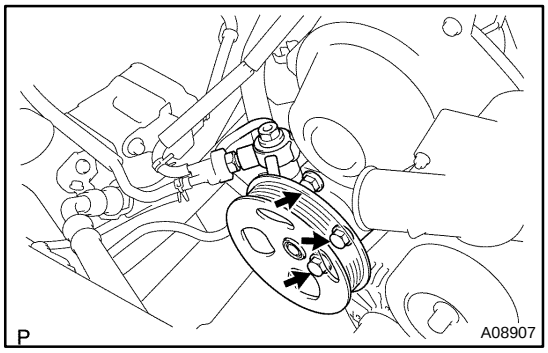

17. DISCONNECT PS PUMP FROM ENGINE

Remove the 3 bolts, and disconnect the PS pump from the engine.

HINT:
Suspend the PS pump securely.

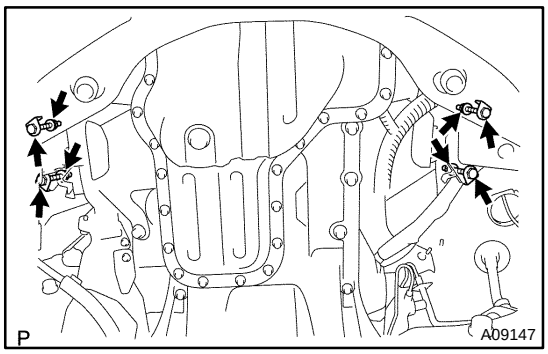

18. REMOVE ENGINE MOUNTING BRACKETS

(a) Attach the engine chain hoist to the engine hangers.

(b) Remove the 4 nuts and 4 bolts holding the engine mounting brackets to the frame brackets.

19. PLACE JACK UNDER TRANSMISSION

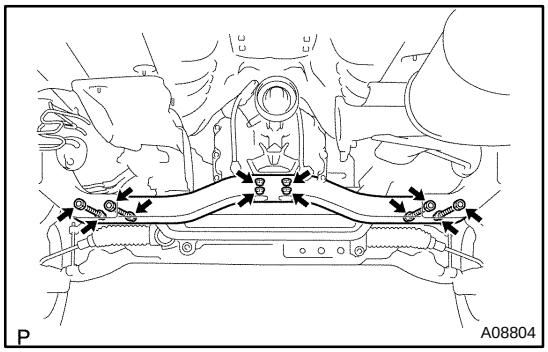

20. REMOVE ENGINE REAR MOUNTING BRACKET

(a) Remove the 8 bolts, 2 nuts and frame crossmember.

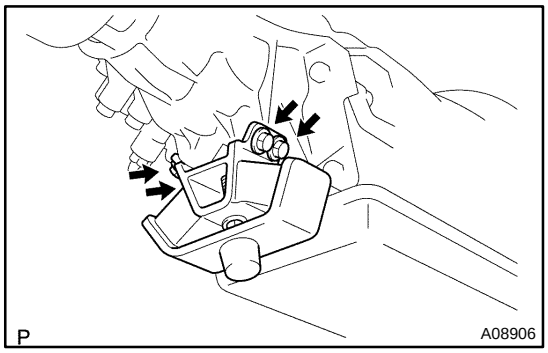

(b) Remove the 4 bolts and engine rear mounting bracket from the transmission.

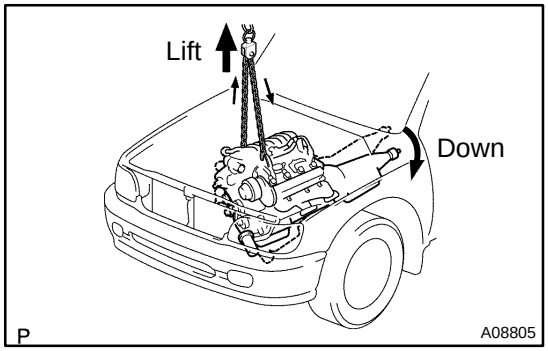

21. REMOVE ENGINE AND TRANSMISSION ASSEMBLY FROM VEHICLE

(a) Lift the engine out of the vehicle slowly and carefully.

HINT:

Make sure the engine is clear of all wiring, hoses and cables.

(b) Place the engine and transmission assembly onto the stand.

22. DISCONNECT ENGINE WIRE FROM TRANSMISSION

(a) Disconnect the 5 connectors.

(b) Disconnect the 2 wire clamps.

23. REMOVE OIL DIPSTICK GUIDE AND DIPSTICK FOR TRANSMISSION

(a) Disconnect the 2 breather hoses from the dipstick guide.

(b) Remove the 2 bolts.

(c) Pull out the dipstick guide and dipstick from the dipstick tube of transmission.

(d) Remove the O−ring from the dipstick guide.

24. REMOVE OIL COOLER PIPES FOR TRANSMISSION

(a) Remove the 3 bolts and 3 stays.

(b) Loosen the 2 union nuts, and remove the 2 oil cooler pipes.

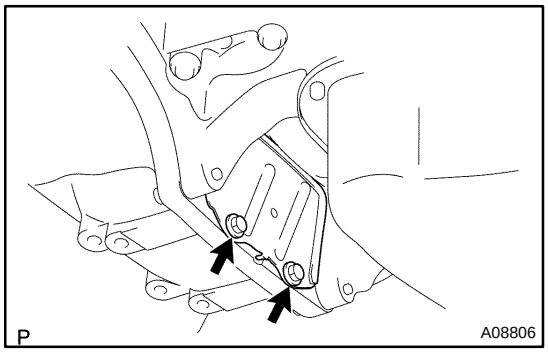

25. REMOVE TORQUE CONVERTER CLUTCH BOLTS

(a) Remove the 2 bolts and flywheel housing under cover.

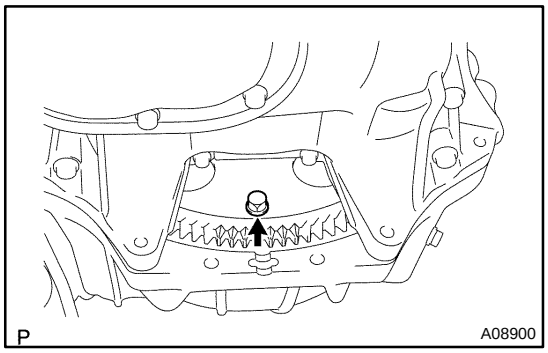

(b) Turn the crankshaft pulley bolt to gain access to each bolt.

(c) Hold the crankshaft pulley bolt with a wrench, and remove the 6 bolts.

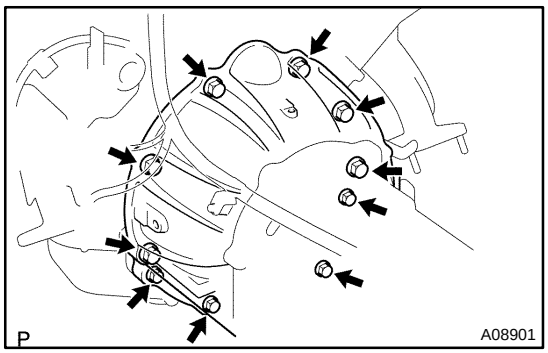

26. REMOVE TRANSMISSION

(a) Remove the 10 bolts.

(b) Remove the transmission together with the torque converter clutch from the engine.

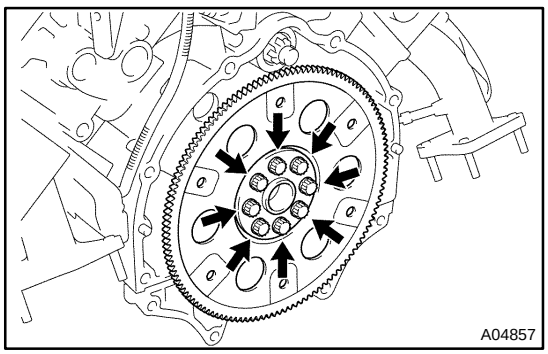

27. REMOVE DRIVE PLATE

Remove the 8 bolts, front spacer, drive plate and rear spacer.

ENGINE UNIT (4WD)

COMPONENTS

EM1XC−01

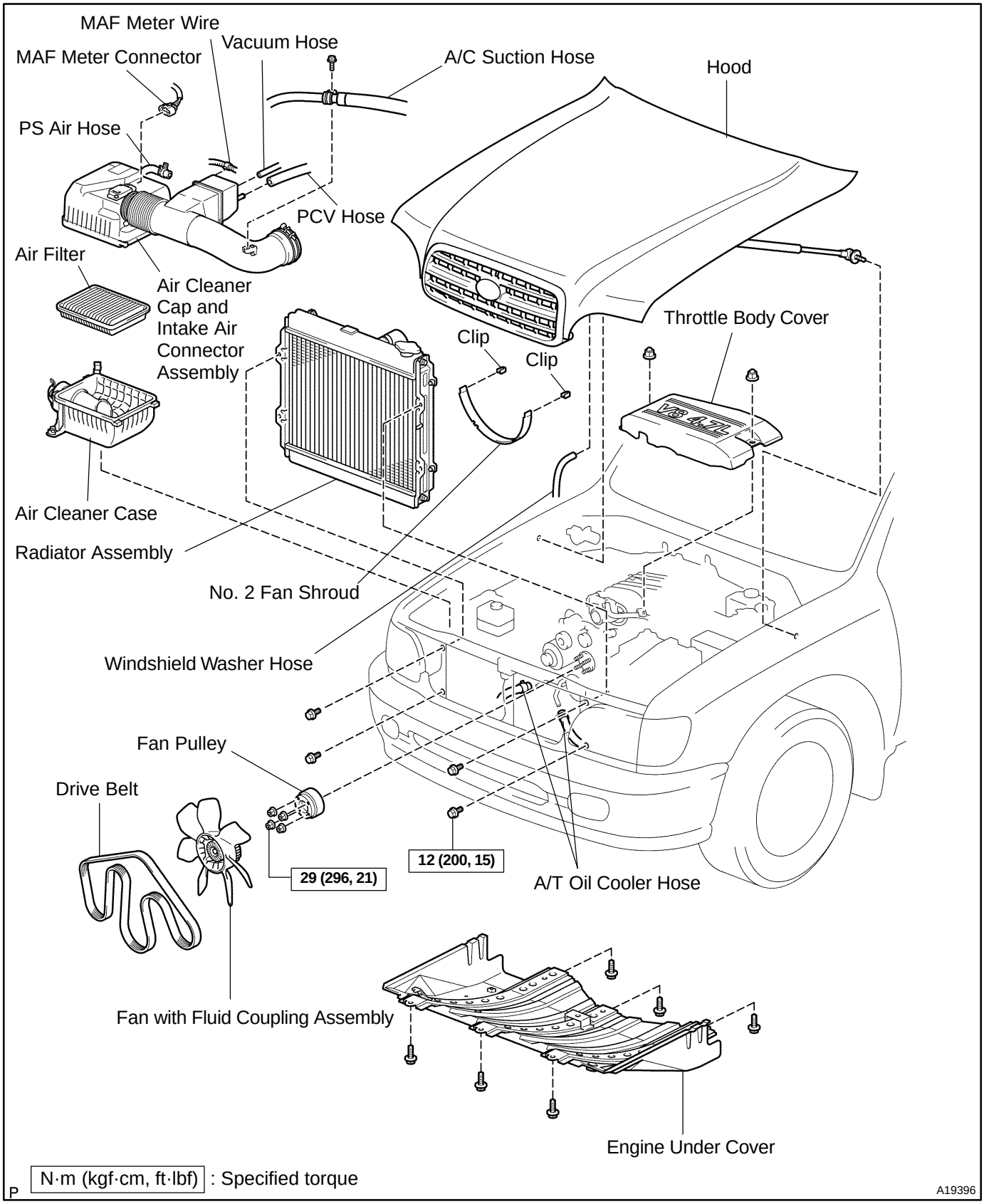

N·m (kgf·cm, ft·lbf) : Specified torque

P

A19396

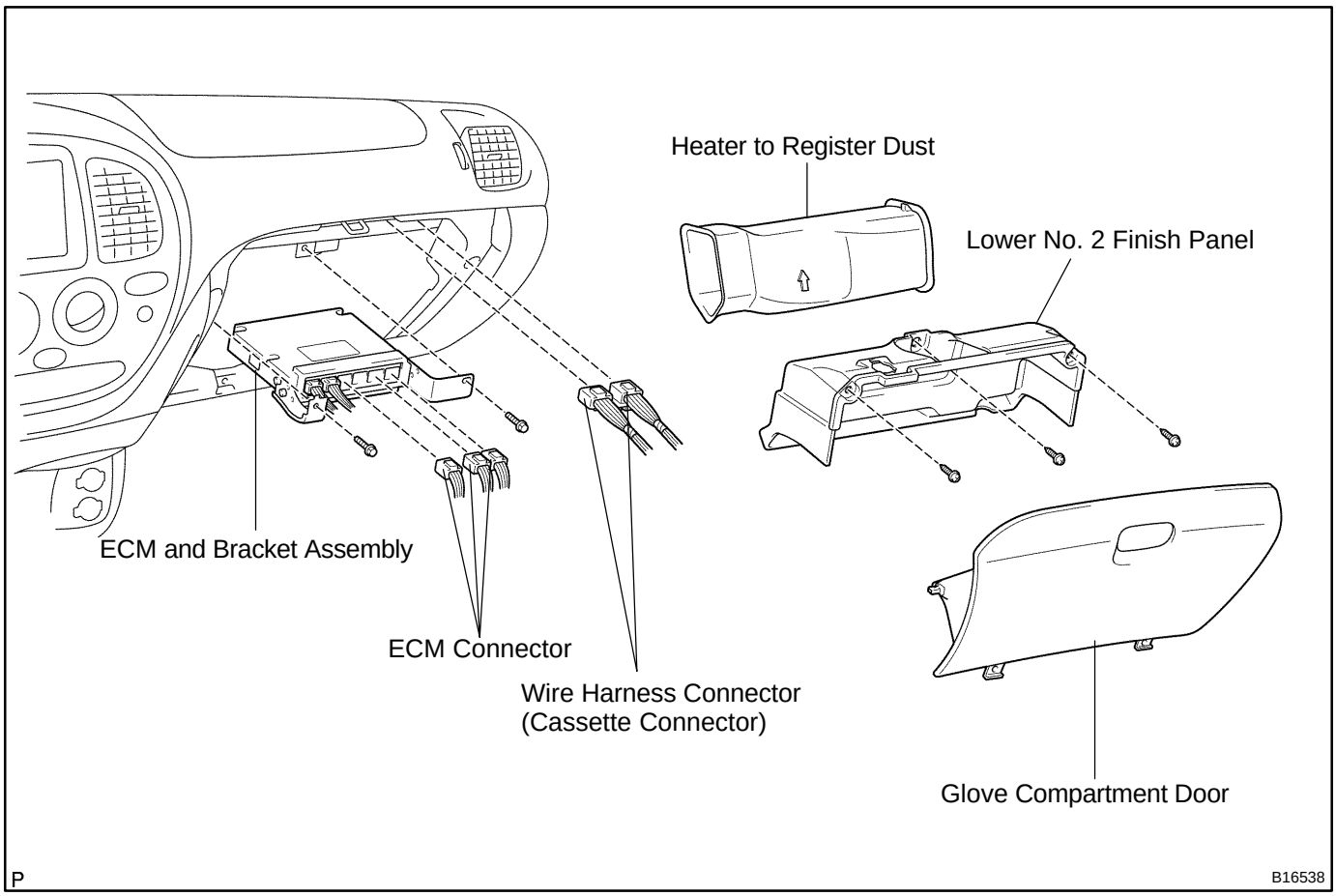
Heater to Register Dust
Lower No. 2 Finish Panel
ECM and Bracket Assembly
ECM Connector
Wire Harness Connector
(Cassette Connector)
Glove Compartment Door
P
B16538

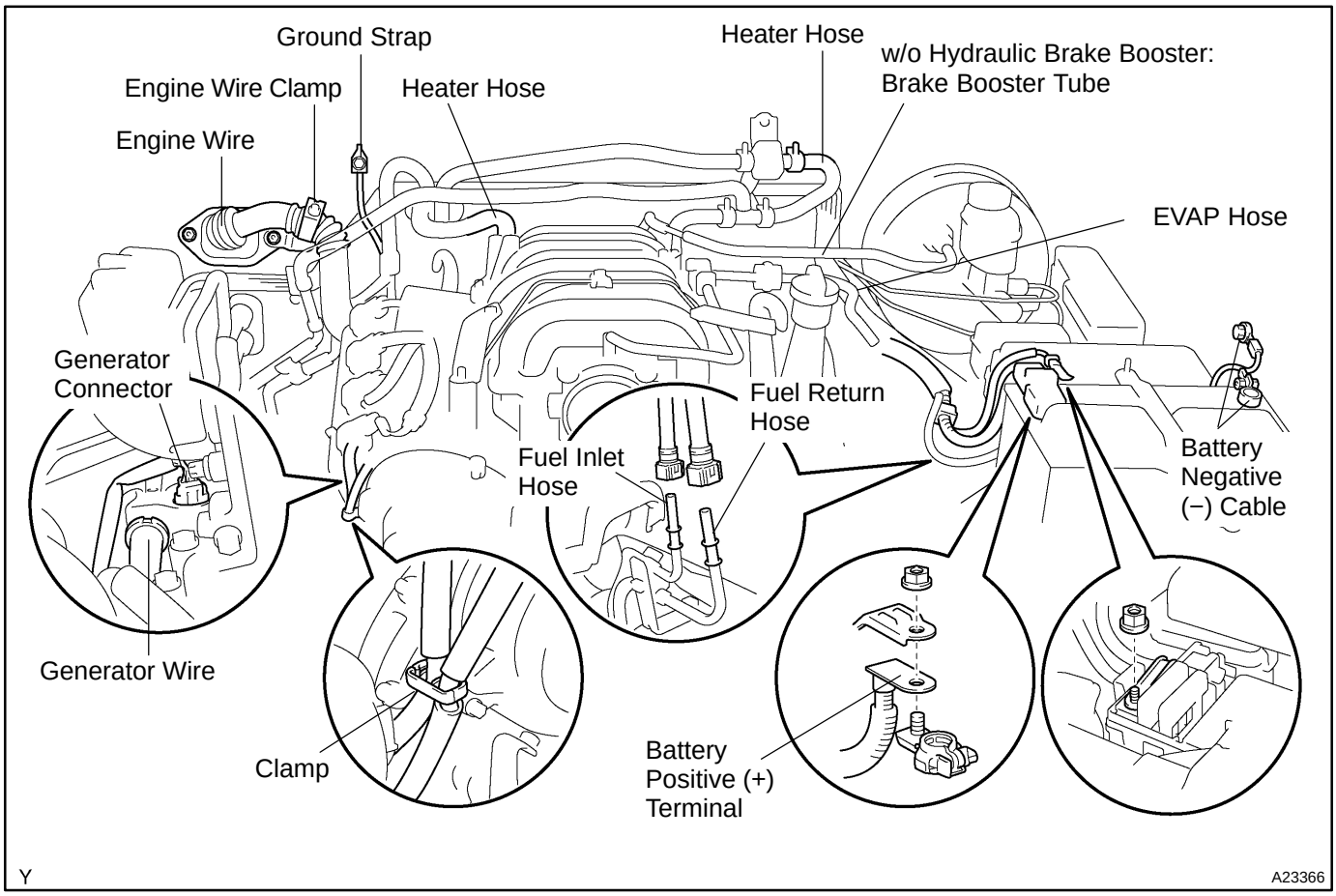
Ground Strap
Heater Hose
w/o Hydraulic Brake Booster:
Brake Booster Tube
Engine Wire Clamp
Heater Hose
Engine Wire
EVAP Hose
Generator
Connector
Fuel Return
Hose
Fuel Inlet
Hose
Battery
Negative
(−) Cable
Generator Wire
Clamp
Battery
Positive (+)
Terminal
Y
A23366

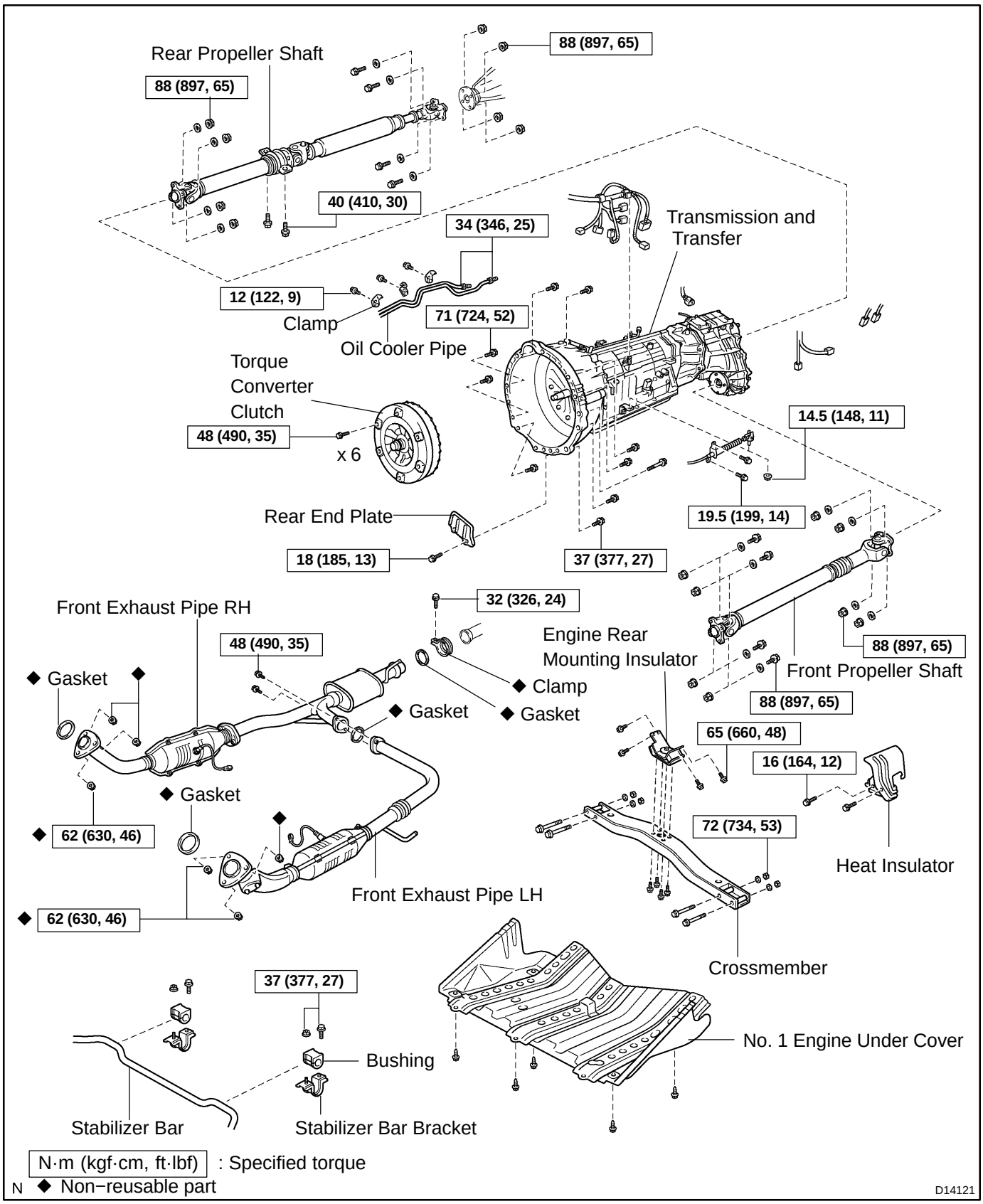
Rear Propeller Shaft
88 (897, 65)
88 (897, 65)
40 (410, 30)
34 (346, 25)
Transmission and Transfer
12 (122, 9)
Clamp
Oil Cooler Pipe
71 (724, 52)
Torque Converter Clutch
48 (490, 35)
x 6
14.5 (148, 11)
19.5 (199, 14)
Rear End Plate
18 (185, 13)
37 (377, 27)
Front Exhaust Pipe RH
32 (326, 24)
48 (490, 35)
Engine Rear Mounting Insulator
Front Propeller Shaft
88 (897, 65)
◆ Gasket
◆ Clamp
◆ Gasket
◆ Gasket
88 (897, 65)
65 (660, 48)
16 (164, 12)
◆ Gasket
72 (734, 53)
◆ 62 (630, 46)
Heat Insulator
Front Exhaust Pipe LH
◆ 62 (630, 46)
Crossmember
37 (377, 27)
No. 1 Engine Under Cover
Bushing
Stabilizer Bar
Stabilizer Bar Bracket
N·m (kgf·cm, ft·lbf) : Specified torque
N ◆ Non−reusable part
D14121

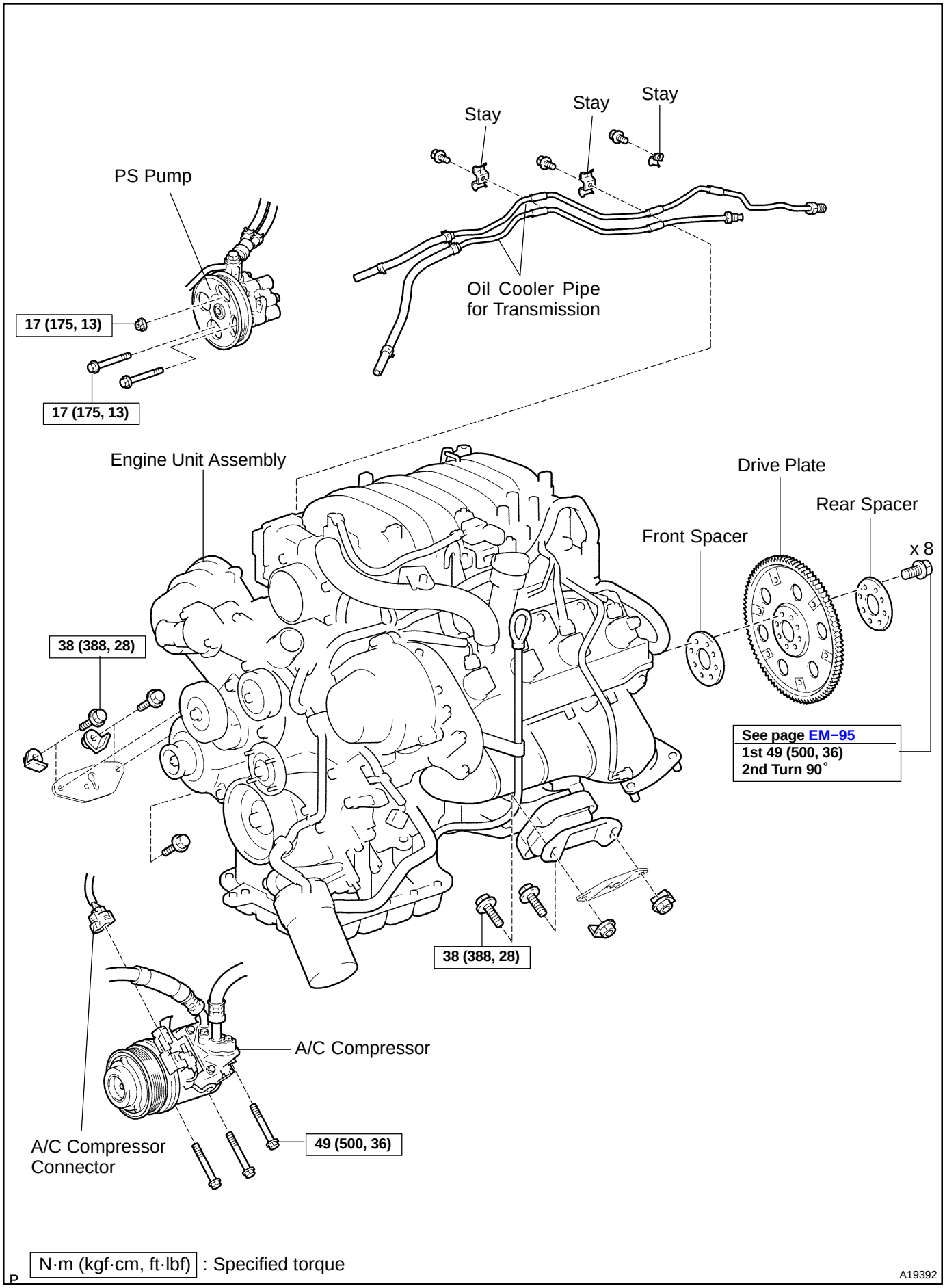

N·m (kgf·cm, ft·lbf) : Specified torque

A19392

EM11Y−08

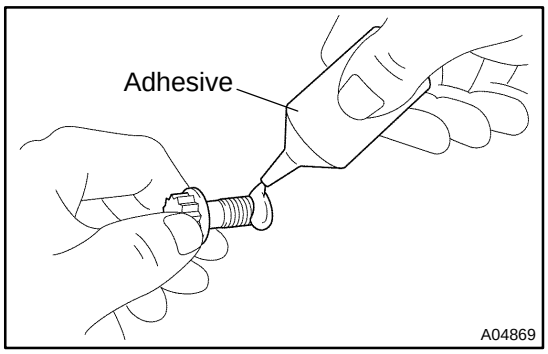

INSTALLATION

1. INSTALL DRIVE PLATE

HINT:

- The mounting bolts are tightened in 2 progressive steps (steps (c) and (e)).
- If any one of the mounting bolts is broken or deformed, replace it.

(a) Apply adhesive to 2 or 3 threads of the mounting bolt end.
Adhesive:
Part No. 08833−00070, THREE BOND 1324 or equivalent

(b) Install the front spacer, drive plate and rear spacer on the crankshaft.

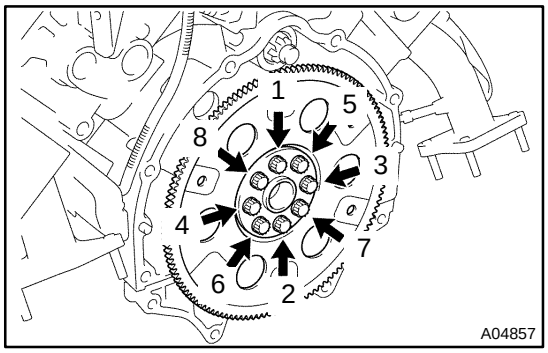

(c) Install and uniformly tighten the 8 mounting bolts in several passes, in the sequence shown.
Torque: 49 N·m (500 kgf·cm, 36 ft·lbf)

If any one of the mounting bolts does not meet the torque specification, replace the mounting bolt.

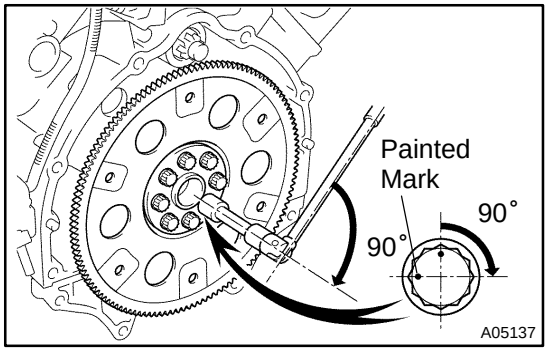

(d) Mark the mounting bolt with paint.
(e) Retighten the mounting bolts by 90° in the numerical order shown.
(f) Check that the painted mark is now at a 90° angle to (e).

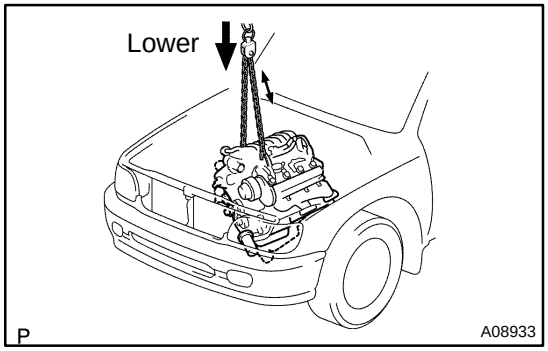

2. INSTALL ENGINE ASSEMBLY IN VEHICLE

(a) Attach the engine chain hoist to the engine hangers.
(b) Slowly lower the engine assembly into the engine compartment.
(c) Attach the engine mounting brackets to the frame brackets.

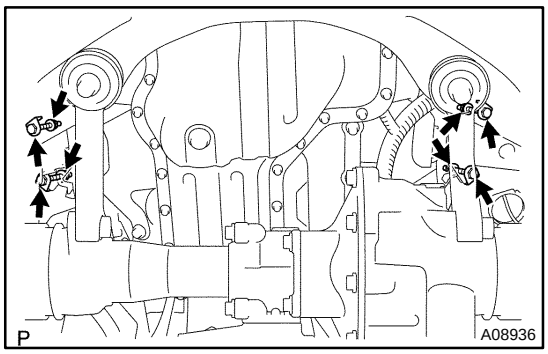

(d) Install the engine mounting brackets to the frame brackets with the 2 nuts and 4 bolts.
Torque: 38 N·m (388 kgf·cm, 28 ft·lbf)
(e) Remove the engine chain hoist.

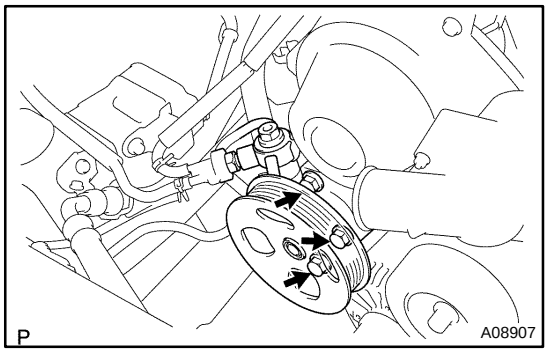

3. INSTALL PS PUMP
Install the PS pump with the 3 bolts.
Torque: 17 N·m (175 kgf·cm, 13 ft·lbf)

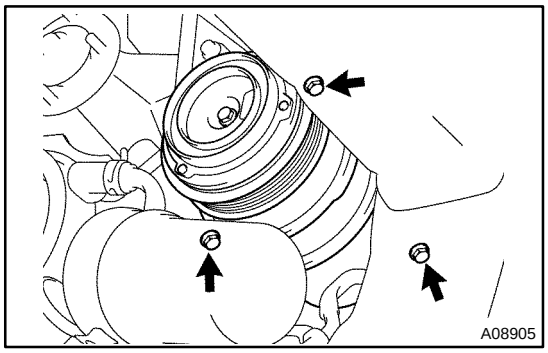

4. INSTALL A/C COMPRESSOR
(a) Install the A/C compressor with the 3 bolts.
Torque: 49 N·m (500 kgf·cm, 36 ft·lbf)
(b) Connect the A/C compressor connector.

5. CONNECT HOSES, WIRES, CONNECTORS, CLAMPS, GROMMET AND CABLES
(a) Connect the accelerator cable to the engine.
(b) Connect the 2 PS air hoses to hose clamp on the No.3 RH timing belt cover.
(c) Connect the generator wire.
(d) Connect the generator connector.
(e) Connect the hose clamp for the PS air hose.
(f) Connect the PS air hose to the upper intake manifold.
(g) Connect the 2 heater hoses.
(h) Connect the ground strap to the cowl panel.
(i) Connect the fuel inlet hose and clamps.
(j) Connect the fuel return hose and clamp.
(k) Connect the air inlet hose to the charcoal canister.
(l) Connect the EVAP hose to the VSV for EVAP.
(m) w/o Hydraulic brake booster:
Connect the brake booster tube.

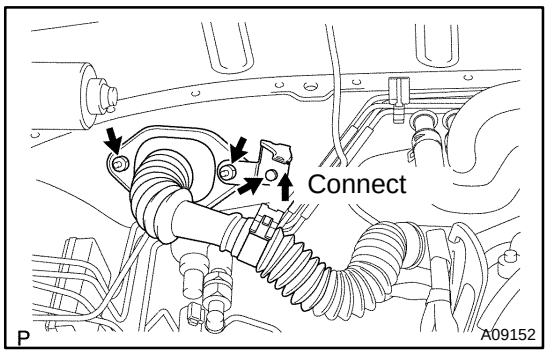

6. CONNECT ENGINE WIRE TO CABIN

(a) Push into the engine wire through the cowl panel.

(b) Install the engine wire bracket with the 2 nuts and bolt and connect the engine wire to the bracket.

(c) Connect the 3 connectors to the ECM.

(d) Connect the 2 wire harness connectors (cassette connector).

(e) Install the ECM with the 3 screws.

(f) Install the lower No. 2 panel.

(g) Install the glove compartment door.

7. INSTALL FAN PULLEY, FAN, FLUID COUPLING AND DRIVE BELT

(a) Temporarily install the fan pulley, the fan and fluid coupling assembly with the 4 nuts.

(b) Install the drive belt (See page CH−16 or CH−28).

(c) Tighten the 4 nuts holding the coupling to the fan bracket.

8. INSTALL BATTERY CABLES

(a) Connect the battery positive (+) terminal cable.

(b) Connect the battery negative (−) cable to the battery and left fender apron.

(c) Connect the clamp on battery negative (−) cable to No. 2 relay box.

9. INSTALL AIR CLEANER AND INTAKE AIR CONNECTOR PIPE ASSEMBLY

(a) Install the air cleaner case with the 3 bolts.
Torque: 5 N·m (51 kgf·cm, 44 in.·lbf)

(b) Connect the intake air connector to the throttle body.

(c) Connect the MAF meter connector.

(d) Install the A/C suction hose to the intake air connector.

(e) Connect the PS air hose, air inlet hose for EVAP, PCV hose and MAF meter connector to the intake air connector.

10. INSTALL THROTTLE BODY COVER

11. INSTALL TRANSMISSION (See page AT−38)

12. INSTALL RADIATOR ASSEMBLY (See page CO−18)

13. INSTALL FRONT STABILIZER BAR (See page SA−91)

14. INSTALL FRONT AND REAR PROPELLER SHAFTS (See page PR−15)

15. INSTALL FRONT EXHAUST PIPES (See page EM−125)

16. FILL WITH ENGINE COOLANT (See page CO−2)

17. FILL WITH ENGINE OIL (See page LU−2)

18. START ENGINE AND CHECK FOR LEAKS

19. INSTALL ENGINE UNDER COVERS

20. INSTALL HOOD

21. PERFORM ROAD TEST

Check for abnormal noise, shock, slippage, correct shift points and smooth operation.

22. RECHECK ENGINE COOLANT AND OIL LEVELS

EM11X−08

REMOVAL

1. REMOVE FRONT EXHAUST PIPES
(See page EM−125)

2. REMOVE FRONT AND REAR PROPELLER SHAFTS
(See page PR−10)

3. REMOVE FRONT STABILIZER BAR
(See page SA−89)

4. REMOVE TRANSMISSION (See page AT−34)

5. REMOVE ENGINE HOOD

6. REMOVE ENGINE UNDER COVER

7. DRAIN ENGINE COOLANT

8. REMOVE RADIATOR ASSEMBLY (See page CO−17)

9. REMOVE THROTTLE BODY COVER

10. REMOVE AIR CLEANER AND INTAKE AIR CONNECTOR ASSEMBLY

(a) Disconnect the MAF meter connector.
(b) Loosen the 3 bolts, and remove the air cleaner case.
(c) Remove the A/C suction hose from the intake air connector.
(d) Disconnect the PS air hose, air inlet hose for EVAP, PCV hose and MAF meter wire from the air intake connector.
(e) Disconnect the intake air connector from the throttle body.

11. DISCONNECT BATTERY CABLES

(a) Disconnect the clamp on battery negative (−) cable from the No. 2 relay box.
(b) Disconnect the battery positive (+) terminal cable.
(c) Disconnect the battery negative (−) cable from the left fender apron.

12. REMOVE DRIVE BELT, FAN, FLUID COUPLING AND FAN PULLEY

(a) Loosen the 4 nuts holding the fluid coupling to the fan bracket.
(b) Remove the drive belt (See page CH−7 or CH−19).
(c) Remove the 4 nuts, the fan, fluid coupling assembly and fan pulley.

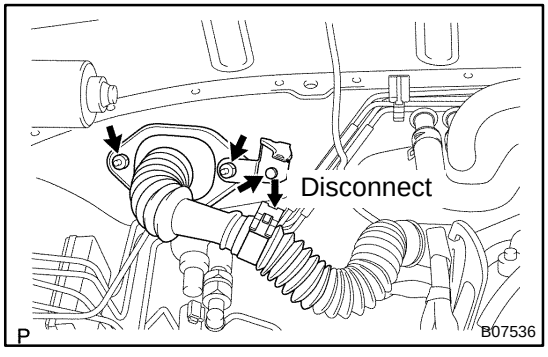

13. DISCONNECT ENGINE WIRE FROM CABIN

(a) Remove the glove compartment door.
(b) Remove the lower No. 2 panel.
(c) Remove the 3 screws, and disconnect the ECM from the body bracket.
(d) Disconnect the 3 wire harness connectors from the ECM.
(e) Disconnect the 2 wire harness connectors (cassette connector).
(f) Disconnect the engine wire from the engine wire bracket and remove the 2 nuts, bolt and bracket.

(g) Pull out the engine wire from the cowl panel.

14. DISCONNECT HOSES, WIRES, CONNECTORS, CLAMPS, GROMMET AND CABLES

(a) Disconnect the accelerator cable from the engine.
(b) Disconnect the 2 PS air hoses from hose clamp on the No. 3 RH timing belt cover.
(c) Disconnect the generator wire.
(d) Disconnect the generator connector.
(e) Disconnect the hose clamp for the PS air hose.
(f) Disconnect the PS air hose from the upper intake manifold.
(g) Disconnect the 2 heater hoses.
(h) Disconnect the ground strap from the cowl panel.
(i) Disconnect the fuel inlet hose and clamps.
(j) Disconnect the fuel return hose and clamp.
(k) Disconnect the air inlet hose from the charcoal canister.
(l) Disconnect the EVAP hose from the VSV for EVAP.
(m) w/o Hydraulic brake booster:
Disconnect the brake booster tube.

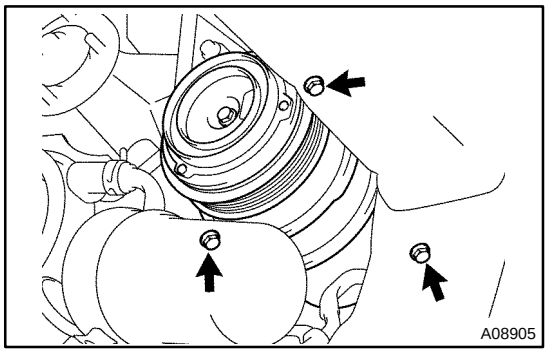

15. DISCONNECT A/C COMPRESSOR FROM ENGINE

(a) Disconnect the A/C compressor connector.
(b) Remove the 3 bolts, and disconnect the A/C compressor from the engine.

HINT:
Suspend the A/C compressor securely.

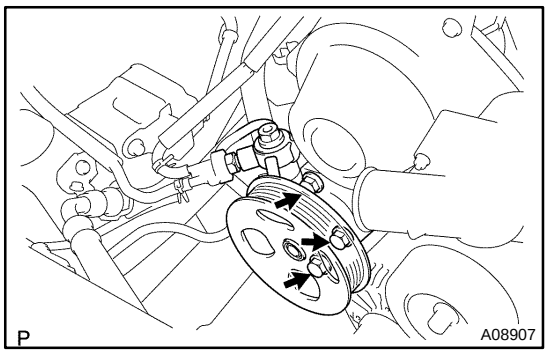

16. DISCONNECT PS PUMP FROM ENGINE

Remove the 3 bolts, and disconnect the PS pump from the engine.

HINT:
Suspend the PS pump securely.

17. REMOVE OIL COOLER PIPES FOR TRANSMISSION

(a) Remove the 3 bolts and 3 stays.
(b) Loosen the 2 union nuts, and remove the 2 oil cooler pipes.

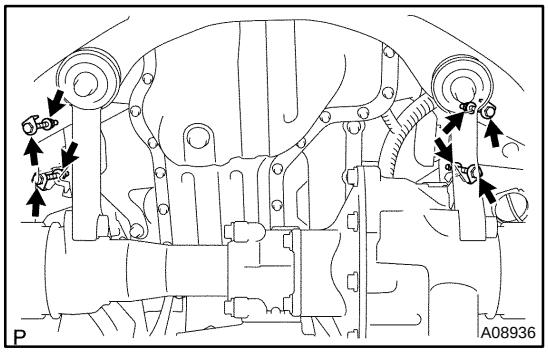

18. REMOVE ENGINE ASSEMBLY FROM VEHICLE

(a) Attach the engine chain hoist to the engine hangers.
(b) Remove the 4 bolts holding the engine mounting brackets to the frame brackets.

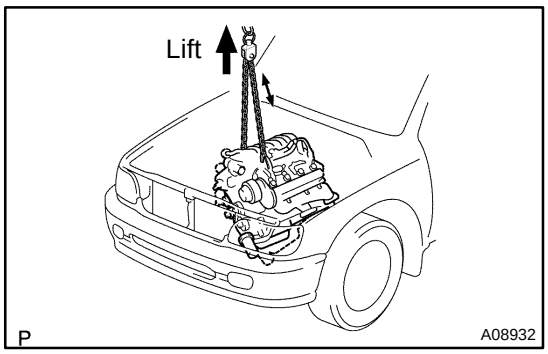

(c) Lift the engine out of the vehicle slowly and carefully.

HINT:

Make sure the engine is clear of all wiring, hoses and cables.

(d) Place the engine and transmission assembly onto the stand.

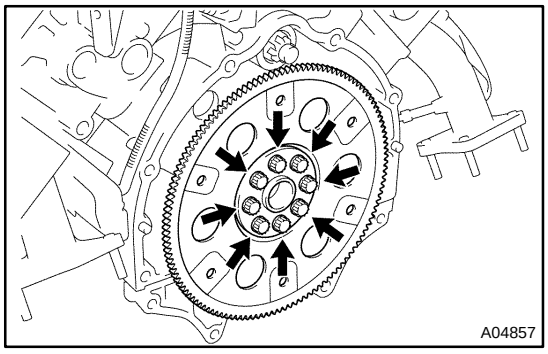

19. REMOVE DRIVE PLATE

Remove the 8 bolts, front spacer, drive plate and rear spacer.

EXHAUST SYSTEM

COMPONENTS

EM0EE−21

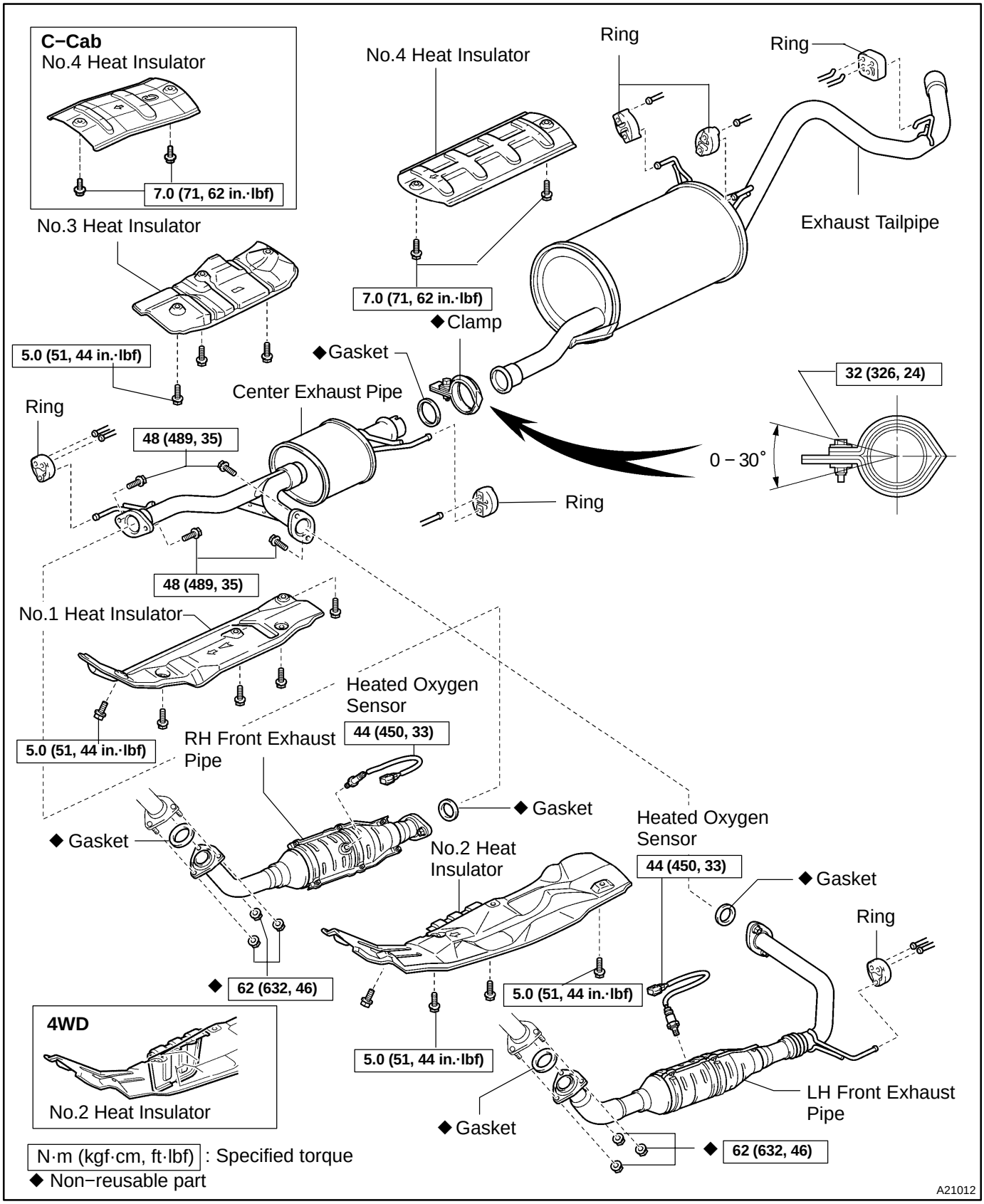

EM1XE−01

INSTALLATION

1. REMOVE HEAT INSULATOR

(a) Install the No.1 heat insulator with the 5 bolts.
Torque: 5.0 N·m (51 kgf·cm, 44 in.·lbf)

(b) Install the No.2 heat insulator with the 4 bolts.
Torque: 5.0 N·m (51 kgf·cm, 44 in.·lbf)

(c) Install the No.3 heat insulator with the 3 bolts.
Torque: 5.0 N·m (51 kgf·cm, 44 in.·lbf)

(d) Install the No.4 heat insulator with the 2 bolts.
Torque: 7.0 N·m (71 kgf·cm, 62 in.·lbf)

2. INSTALL EXHAUST TAIL PIPE

Install the 3 rings and exhaust tailpipe.

3. INSTALL CENTER EXHAUST PIPE

(a) Install the 2 rings and center exhaust pipe.

(b) Install a new gasket and connect the center exhaust pipe to the exhaust tailpipe with a new clamp.
Torque: 32 N·m (326 kgf·cm, 24 ft·lbf)

4. INSTALL LH FRONT EXHAUST PIPE

(a) Install a new gasket and ring to the LH front exhaust pipe.

(b) Install the LH front exhaust pipe to the exhaust manifold with 3 new nuts.
Torque: 62 N·m (632 kgf·cm, 46 ft·lbf)

5. INSTALL RH FRONT EXHAUST PIPE

(a) Install a new gasket to the RH front exhaust pipe.

(b) Install the RH front exhaust pipe to the exhaust manifold with 3 new nuts.
Torque: 62 N·m (632 kgf·cm, 46 ft·lbf)

6. CONNECT EXHAUST CENTER PIPE

(a) Install a new gasket and connect the RH front exhaust pipe with the 2 bolts.
Torque: 48 N·m (489 kgf·cm, 35 ft·lbf)

(b) Install a new gasket and connect the LH front exhaust pipe with the 2 bolts.
Torque: 48 N·m (489 kgf·cm, 35 ft·lbf)

7. INSTALL HEATED OXYGEN SENSOR (BANK2)

(a) Install the heated oxygen sensor.
Torque: 44 N·m (450 kgf·cm, 33 ft·lbf)

(b) Connect the heated oxygen sensor connector.

8. INSTALL HEATED OXYGEN SENSOR (BANK1)

(a) Install the heated oxygen sensor.
Torque: 44 N·m (450 kgf·cm, 33 ft·lbf)

(b) Connect the heated oxygen sensor connector.

EM1XD−01

REMOVAL

1. REMOVE HEATED OXYGEN SENSOR (BANK 1)

(a) Disconnect the heated oxygen sensor.

(b) Remove the heated oxygen sensor.

2. REMOVE HEATED OXYGEN SENSOR (BANK2)

(a) Disconnect the heated oxygen sensor connector.

(b) Remove the heated oxygen sensor.

3. SEPARATE EXHAUST CENTER PIPE

Remove the 4 bolts and 2 gasket from the exhaust center pipe.

4. REMOVE RH FRONT EXHAUST PIPE

Remove the 3 nuts, gasket, and front exhaust pipe from the exhaust manifold.

5. REMOVE LH FRONT EXHAUST PIPE

Remove the 3 nuts, gasket, ring and front exhaust pipe from the exhaust manifold.

6. REMOVE CENTER EXHAUST PIPE

(a) Loosen the clamp bolt, disconnect the center exhaust pipe and remove the gasket from the exhaust tailpipe.

(b) Remove the 2 rings and center exhaust pipe.

7. REMOVE EXHAUST TAILPIPE

(a) Remove the 3 rings and exhaust tailpipe.

8. REMOVE HEAT INSULATOR

(a) Remove the 5 bolts and No.1 heat insulator.

(b) Remove the 4 bolts and No.2 heat insulator.

(c) Remove the 3 bolts and No.3 heat insulator.

(d) Remove the 2 bolts and No.4 heat insulator.

IDLE SPEED

EM1X3−02

INSPECTION

1. INITIAL CONDITIONS

(a) Engine at normal operating temperature
(b) Air cleaner installed
(c) All pipes and hoses of air induction system connected
(d) All accessories switched OFF
(e) All vacuum lines properly connected
(f) SFI system wiring connectors fully plugged
(g) iCorrect gnition timing
(h) Transmission in neutral
(i) Air conditioning switched OFF

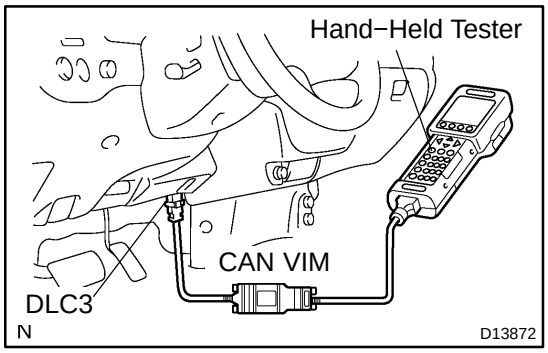

2. INSPECT ENGINE IDLE SPEED

(a) When using a hand−held tester.
  (1) Connect a hand−held tester to the Controller Area Network Vehicle Interface Module (CAN VIM). Then connect the CAN VIM to the Date Link Connector 3 (DLC3).
  (2) Please refer to the hand−held tester operator's manual for further details.
  (3) Race the engine speed at 2,500 rpm for approx. 90 seconds.
  (4) Check the idle speed.
  Idle speed: 700 ± 50 rpm
  (Transmission in neutral)

If the idle speed is not as specified, check the air intake system.

  (5) Disconnect the hand−held tester and CAN VIM from the DLC3.

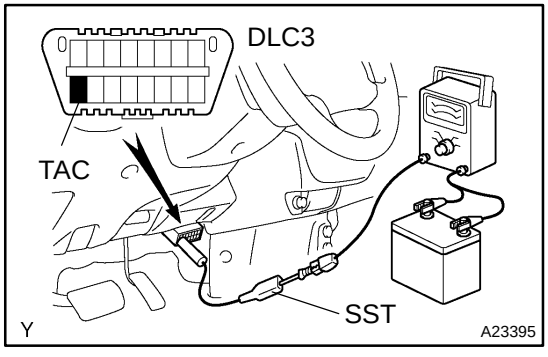

(b) When not using a hand−held tester.
  (1) Using SST, connect the tachometer probe to terminal TAC of the DLC3.
  SST 09843−18030
  (2) Race the engine at 2,500 rpm for approx. 90 seconds.
  (3) Check the idle speed.
  Idle speed: 700 ± 50 rpm
  (Transmission in neutral)

If the idle speed is not as specified, check the air intake system.

(4) Disconnect the tachometer from the DLC3.

IGNITION TIMING

EM0KT−12

INSPECTION

1. WARM UP ENGINE

Allow the engine to warm up to normal operating temperature.

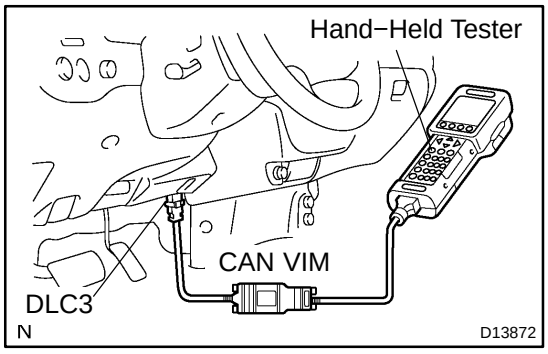

2. INSPECT IGNITION TIMING

(a) When using a hand−held tester.

(1) Connect a hand−held tester to the Controller Area Network Vehicle Interface Module (CAN VIM). Then connect the CAN VIM to the Date Link Connector 3 (DLC3).

(2) Please refer to the hand−held tester operator's manual for further details.

Ignition timing: 5 to 15° BTDC at idle
(Transmission in neutral)

(3) Disconnect the hand−held tester and CAN VIM from the DLC3.

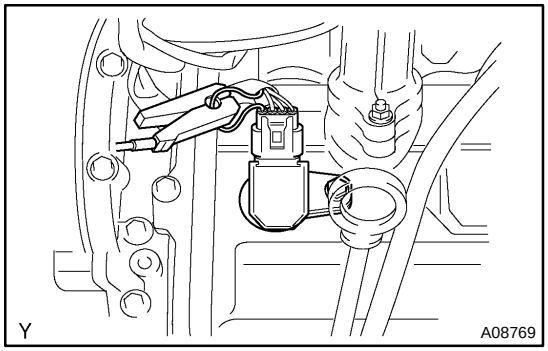

(b) When not using a hand−held tester.

(1) Connect the tester probe of a timing light to the wire (black − red) of the ignition coil connector for the No.1 cylinder.

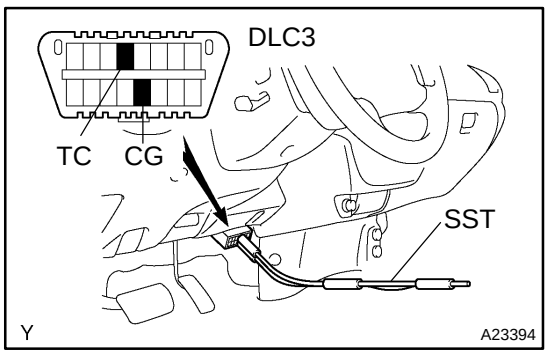

(2) Using SST, connect terminals TC and CG of the DLC3.

SST 09843−18040

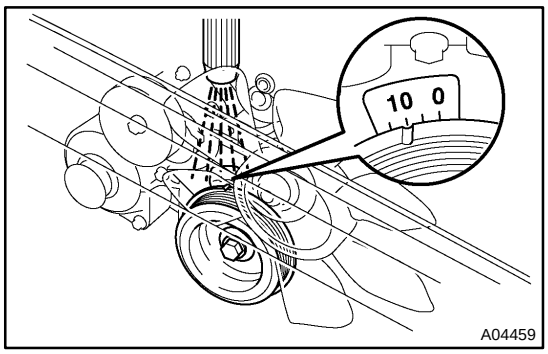

(3) Using a timing light, check the ignition timing.
Ignition timing: 5 to 15° BTDC at idle
(Transmission in neutral)
(4) Remove the SST from the DLC3.
SST 09843−18040
(5) Disconnect the timing light from the engine.

TIMING BELT

EM0KV−12

COMPONENTS

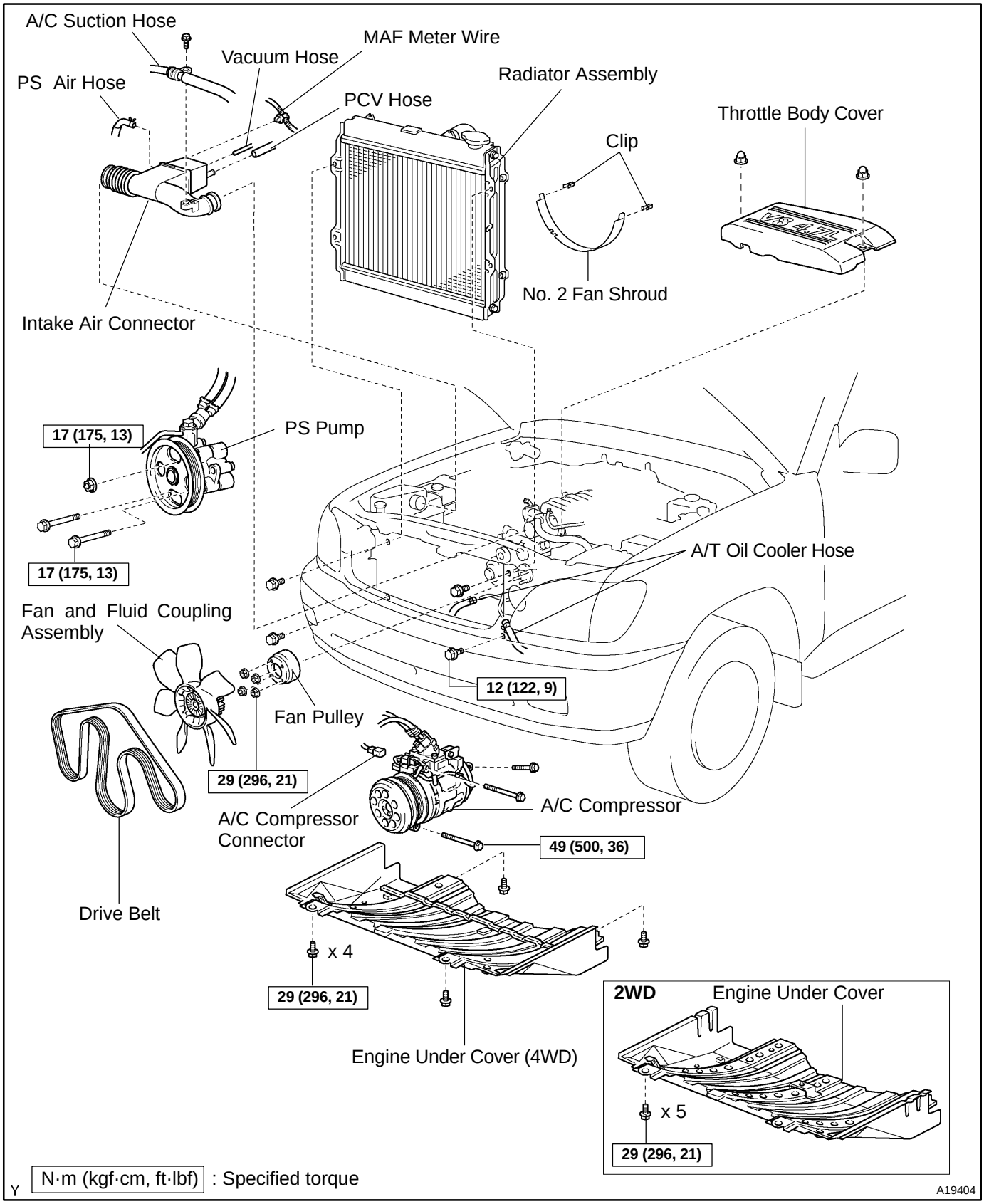

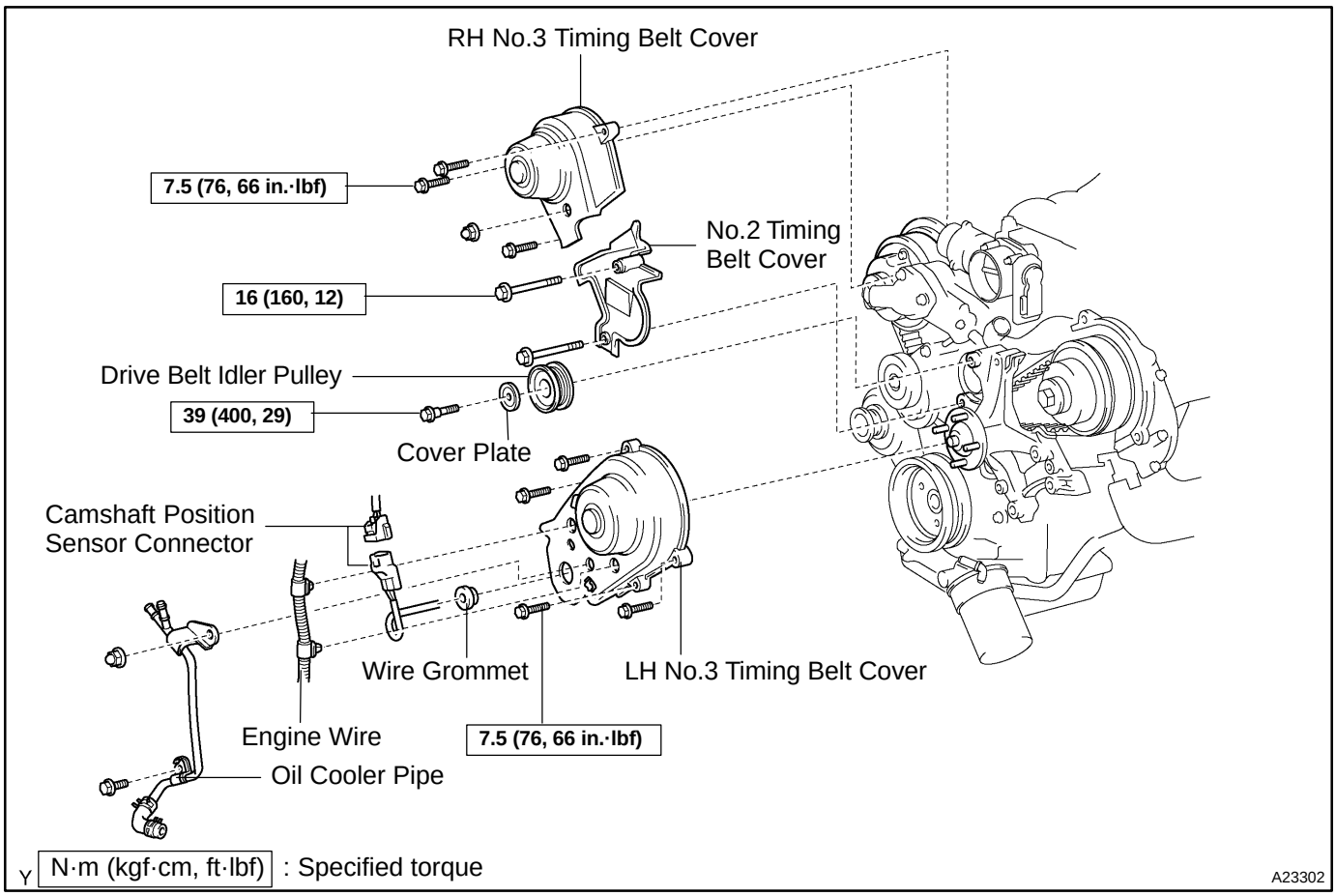
RH No.3 Timing Belt Cover
7.5 (76, 66 in.·lbf)
No.2 Timing Belt Cover
16 (160, 12)
Drive Belt Idler Pulley
39 (400, 29)
Cover Plate
Camshaft Position Sensor Connector
Wire Grommet
LH No.3 Timing Belt Cover
Engine Wire
7.5 (76, 66 in.·lbf)
Oil Cooler Pipe
Y N·m (kgf·cm, ft·lbf) : Specified torque
A23302

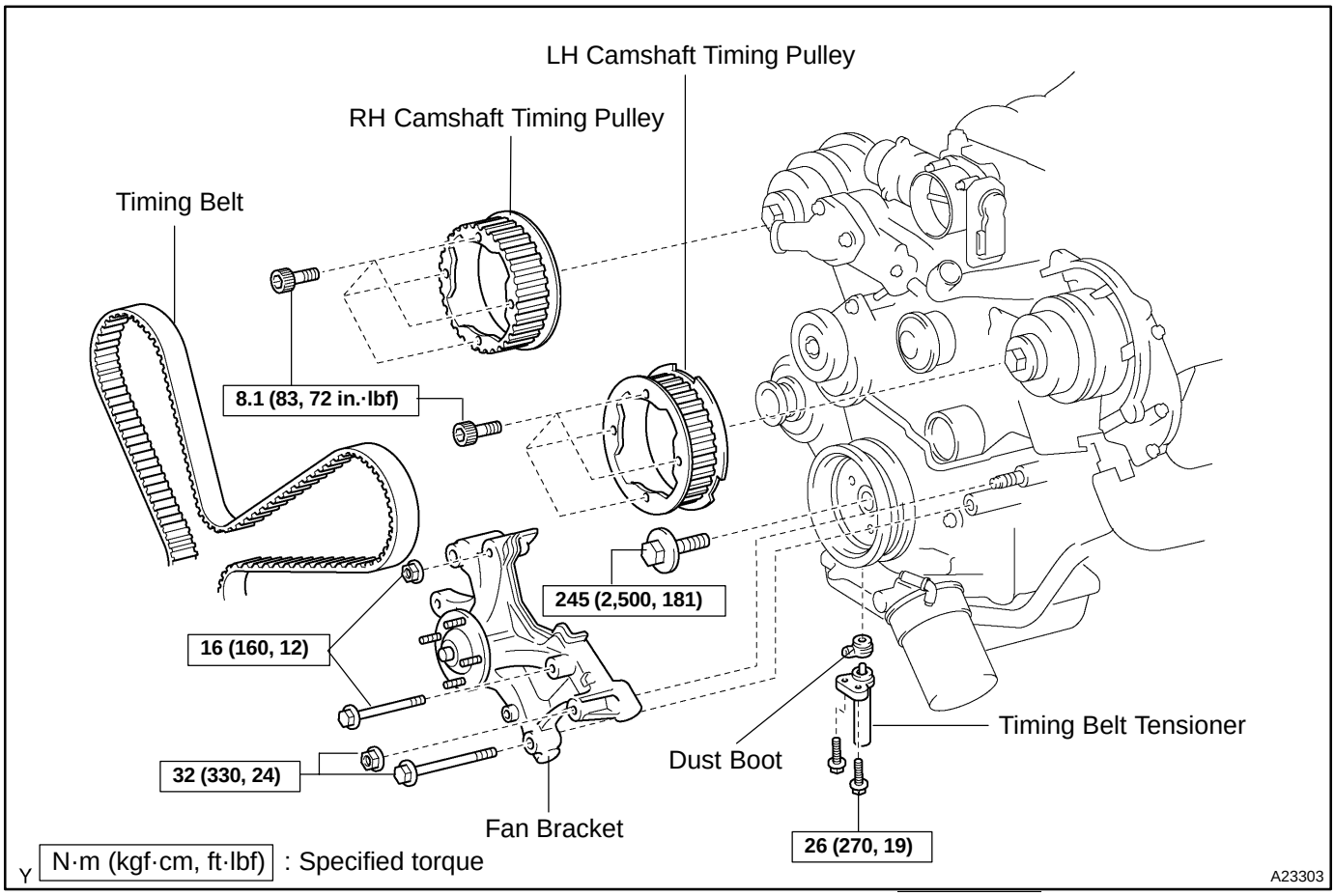
LH Camshaft Timing Pulley
RH Camshaft Timing Pulley
Timing Belt
8.1 (83, 72 in.·lbf)
245 (2,500, 181)
16 (160, 12)
Timing Belt Tensioner
Dust Boot
32 (330, 24)
Fan Bracket
26 (270, 19)
Y N·m (kgf·cm, ft·lbf) : Specified torque
A23303

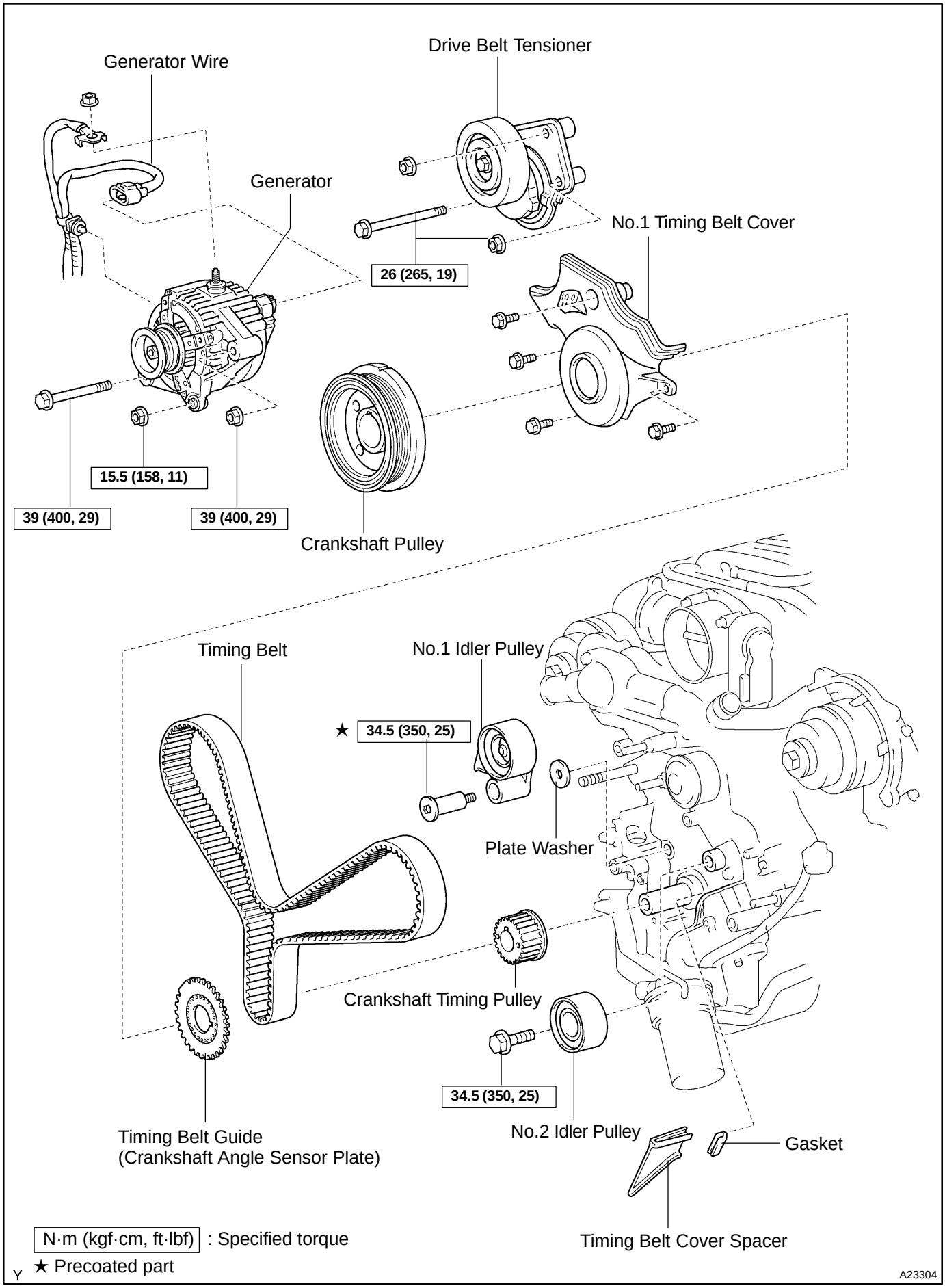
Generator Wire
Drive Belt Tensioner
Generator
No.1 Timing Belt Cover
26 (265, 19)
15.5 (158, 11)
39 (400, 29)
39 (400, 29)
Crankshaft Pulley
Timing Belt
No.1 Idler Pulley
★ 34.5 (350, 25)
Plate Washer
Crankshaft Timing Pulley
34.5 (350, 25)
No.2 Idler Pulley
Gasket
Timing Belt Guide
(Crankshaft Angle Sensor Plate)
Timing Belt Cover Spacer
N·m (kgf·cm, ft·lbf) : Specified torque
★ Precoated part
Y
A23304

EM0KX−08

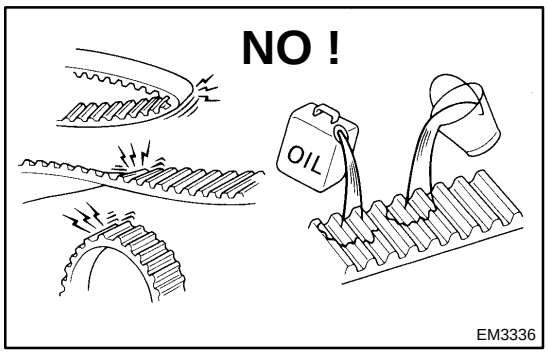

INSPECTION

1. INSPECT TIMING BELT

NOTICE:

- **Do not bend, twist or turn the timing belt inside out.**
- **Do not allow the timing belt to come into contact with oil, water or steam.**
- **Do not utilize timing belt tension when installing or removing the mount bolt of the camshaft timing pulley.**

If there is any defect, as shown in the illustration, check these points:

(a) Premature parting
- Check for proper installation.
- Check the timing cover gasket for damage and proper installation.

(b) If the belt teeth are cracked or damaged, check to see if either camshaft is locked.

(c) If there is noticeable wear or cracks on the belt face, check to see if there are nicks on the side of the idler pulley lock and water pump.

(d) If there is wear or damage on even one side of the belt, check the belt guide and the alignment of each pulley.

(e) If there is noticeable wear on the belt teeth, check timing cover for damage and for foreign material on the pulley teeth.

If necessary, replace the timing belt.

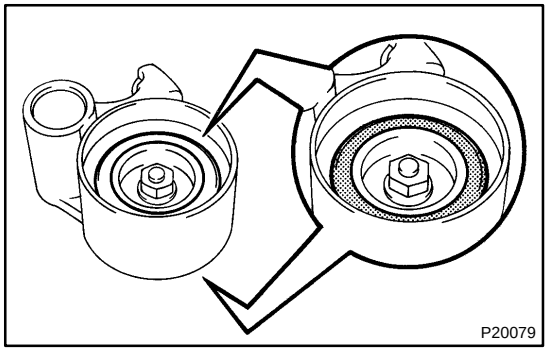

2. INSPECT IDLER PULLEYS

(a) Visually check the seal portion of the idler pulley for oil leakage.

If leakage is found, replace the idler pulley.

(b) Check that the idler pulley turns smoothly.

If necessary, replace the idler pulley.

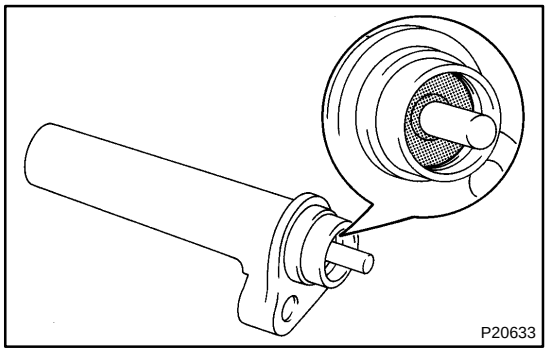

3. INSPECT TIMING BELT TENSIONER

(a) Visually check the seal portion of the tensioner for oil leakage.

HINT:

If there is only the faintest trace of oil on the seal on the push rod side, the tensioner is all right.

If leakage is found, replace the tensioner.

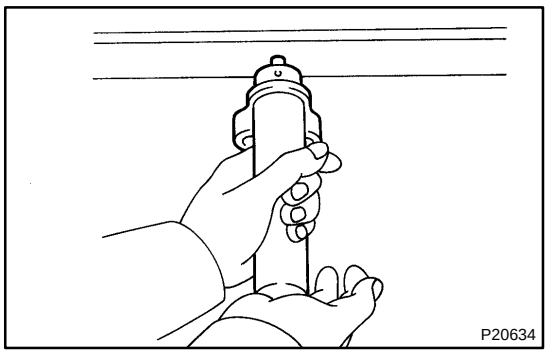

(b) Hold the tensioner with both hands and push the push rod strongly as shown to check that it doesn't move.

If the push rod moves, replace the tensioner.

NOTICE:

Never hold the tensioner push rod facing downward.

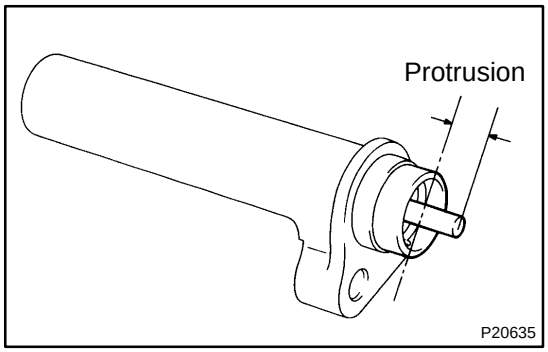

(c) Measure the protrusion of the push rod from the housing end.

Protrusion: 10.5 to 11.5 mm (0.413 to 0.453 in.)

If the protrusion is not as specified, replace the tensioner.

4. INSPECT WATER PUMP (See page CO−7)

EM1WY−02

INSTALLATION

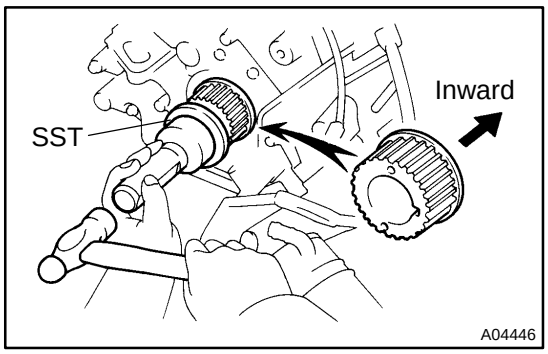

1. INSTALL CRANKSHAFT TIMING PULLEY

(a) Align the timing pulley set key with the key groove of the pulley.

(b) Using SST and a hammer, tap in the timing pulley, facing the flange side inward.
SST 09223−46011

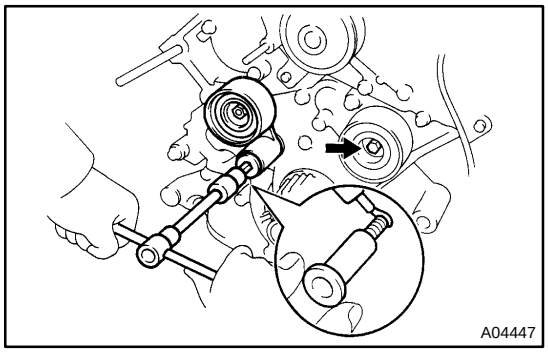

2. INSTALL NO.1 IDLER PULLEY AND NO.2 IDLER PULLEY

(a) Apply adhesive 2 or 3 threads of the pivot bolt.
Adhesive:
Part No. 08833−00080, THREE BOND 1344, LOCTITE 242 or equivalent

(b) Using a 10 mm hexagon wrench, install the plate washer and No.1 idler pulley with the pivot bolt.
Torque: 34.5 N·m (350 kgf·cm, 25 ft·lbf)

(c) Install the No.2 idler pulley with the bolt.
Torque: 34.5 N·m (350 kgf·cm, 25 ft·lbf)

(d) Check that the No.1 and No.2 idler pulleys moves smoothly.

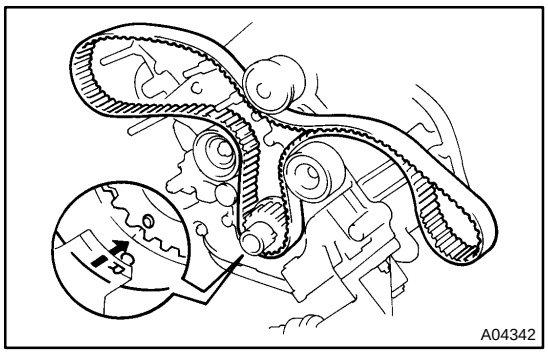

3. TEMPORARILY INSTALL TIMING BELT

NOTICE:

The engine should be cold.

(a) Remove any oil or water on the crankshaft pulley, oil pump pulley, water pump pulley, No.1 idler pulley and No.2 idler pulley, and keep them clean.

NOTICE:

Only wipe the pulleys; do not use any cleansing agent.

(b) Align the installation mark on the timing belt with the timing mark of the crankshaft timing pulley.

(c) Install the timing belt on the crankshaft timing pulley, No.1 idler pulley and No.2 idler pulley.

4. INSTALL TIMING BELT COVER SPACER

(a) Install the gasket to the cover spacer.

(b) Install the cover spacer.

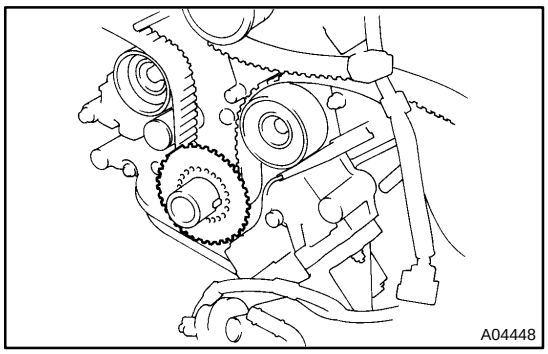

5. INSTALL TIMING BELT GUIDE

Install the belt guide with the cup side facing outward.

6. INSTALL NO.1 TIMING BELT COVER

Install the timing belt cover with the 4 bolts.

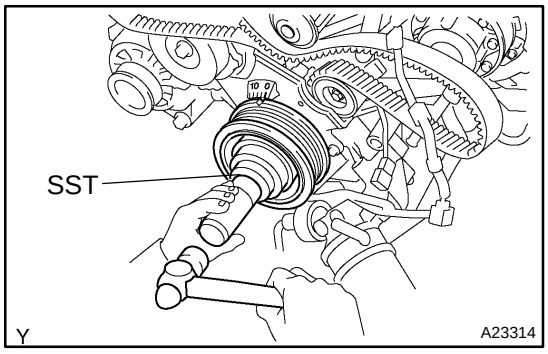

7. INSTALL CRANKSHAFT PULLEY

(a) Align the pulley set key with the key groove of the crankshaft pulley.

(b) Using SST and a hammer, tap in the crankshaft pulley.
SST 09223−46011

8. INSTALL DRIVE BELT TENSIONER

Install the belt tensioner with the bolt and 2 nuts.

Torque: 26 N·m (265 kgf·cm, 19 ft·lbf)

HINT:

Use a bolt of 106 mm (4.18 in.) in length.

9. INSTALL GENERATOR

(See page CH−16 and CH−28)

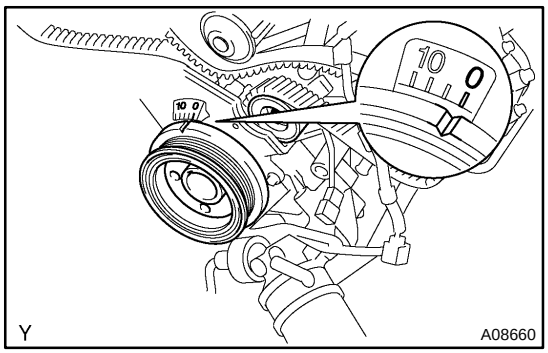

10. CHECK CRANKSHAFT PULLEY POSITION

Check that the timing mark of the crankshaft pulley is aligned with timing mark ”0” of the No.1 timing belt cover.

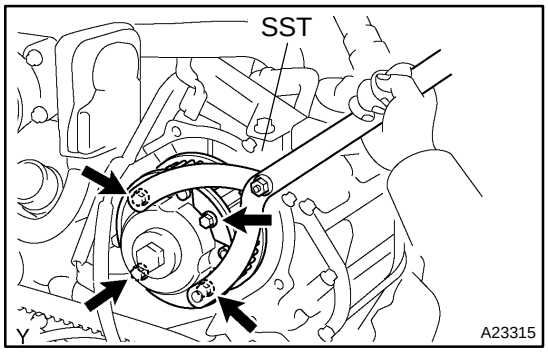

11. INSTALL, LH CAMSHAFT TIMING PULLEY

(a) Align the camshaft knock pin with the knock pin groove of the timing pulley, and slide the timing pulley.

(b) Temporarily install the 4 bolts of the camshaft timing pulley.

(c) Hold the camshaft timing pulley with SST, and tighten the pulley bolt.
SST 09960−10010 (09962−01000, 09963−01000)
Torque: 8.1 N·m (83 kgf·cm, 72 in.·lbf)

HINT:
Set the SST so that the claw comes in contact with the camshaft timing pulley bolt, and tighten the lock nut of the SST.

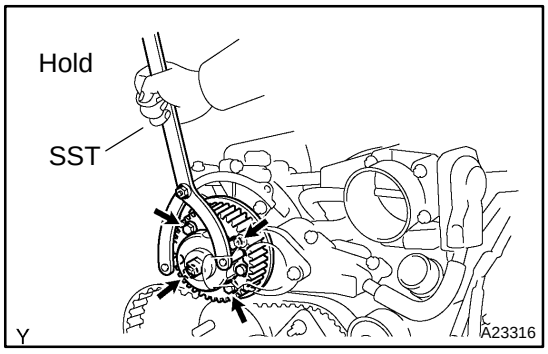

12. INSTALL RH CAMSHAFT TIMING PULLEY

(a) Align the camshaft timing tube knock pin with the knock pin groove of the timing pulley.

(b) Temporarily install the 4 bolts of the camshaft timing pulley.

(c) Hold the camshaft timing pulley with SST, and tighten the pulley bolt.
SST 09960−10010 (09962−01000, 09963−01000)
Torque: 8.1 N·m (83 kgf·cm, 72 in.·lbf)

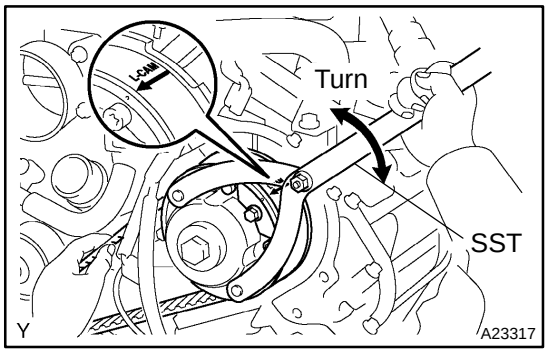

13. CONNECT TIMING BELT TO LH CAMSHAFT TIMING PULLEY

(a) Remove any oil or water on the timing pulley, and keep it clean.

NOTICE:
Only wipe the pulleys; do not use any cleansing agent.

(b) Using SST, turn the timing pulley. Align the installation mark on the timing belt with the timing mark of the timing pulley, and hang the timing belt on the timing pulley.
SST 09960−10010 (09962−01000, 09963−01000)

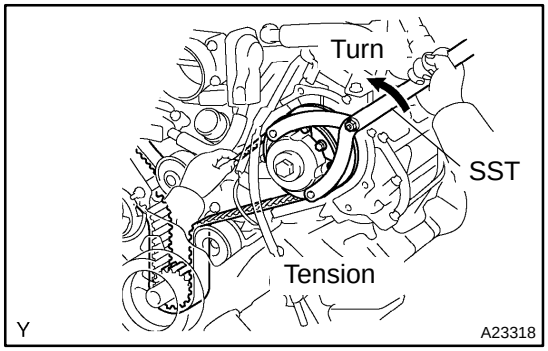

(c) Using SST, turn the LH camshaft timing pulley counter-clockwise until there is tension between the crankshaft timing pulley and LH camshaft timing pulley.
SST 09960−10010 (09962−01000, 09963−01000)

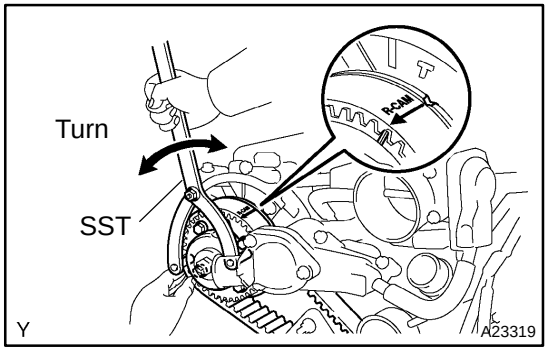

14. CONNECT TIMING BELT TO RH CAMSHAFT TIMING PULLEY

(a) Remove any oil or water on the camshaft timing pulley and water pump pulley, and keep them clean.

NOTICE:
Only wipe the pulleys; do not use any cleansing agent.

(b) Using SST, turn the timing pulley. Align the installation mark on the timing belt with the timing mark of the timing pulley, and hang the timing belt on the timing pulley.
SST 09960−10010 (09962−01000, 09963−01000)

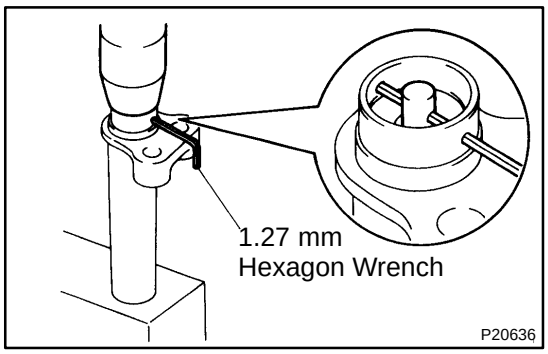

15. SET TIMING BELT TENSIONER

(a) Using a press, slowly press in the push rod using 981 − 9,807 N (100 − 1,000 kgf, 220 − 2,205 lbf) of pressure.

(b) Align the holes of the push rod and housing, and pass a 1.27 mm hexagon wrench through the holes to keep the setting position of the push rod.

(c) Remove the belt tensioner from the press.

(d) Install the dust boot to the belt tensioner.

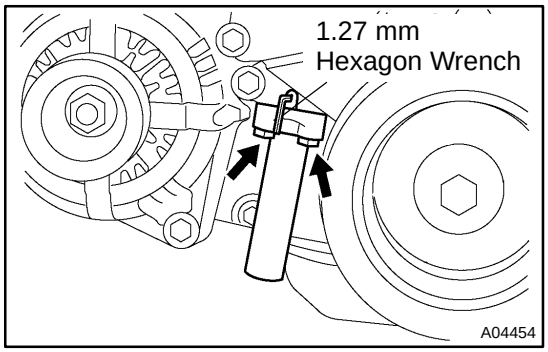

16. INSTALL TIMING BELT TENSIONER

(a) Temporarily install the belt tensioner with the 2 bolts.

(b) Alternately tighten the 2 bolts.

Torque: 26 N·m (270 kgf·cm, 19 ft·lbf)

(c) Using pliers, remove the 1.27 mm hexagon wrench from the belt tensioner.

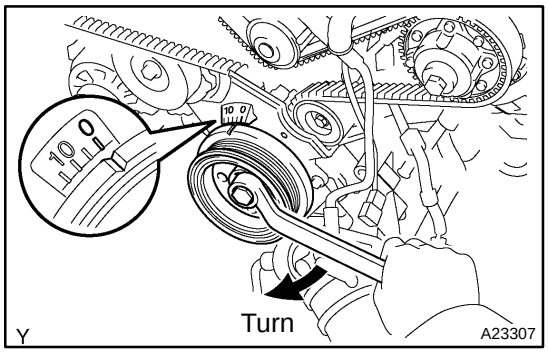

17. CHECK VALVE TIMING

(a) Temporarily install the crankshaft pulley bolt.

(b) Slowly turn the crankshaft pulley 2 revolutions from the TDC to TDC.

NOTICE:

Always turn the crankshaft pulley clockwise.

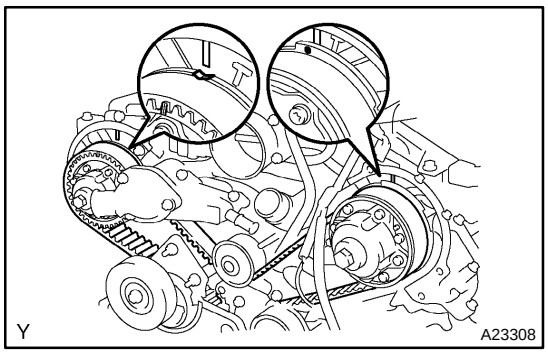

(c) Check that each pulley aligns with the timing marks as shown in the illustration.

If the timing marks do not align, remove the timing belt and reinstall it.

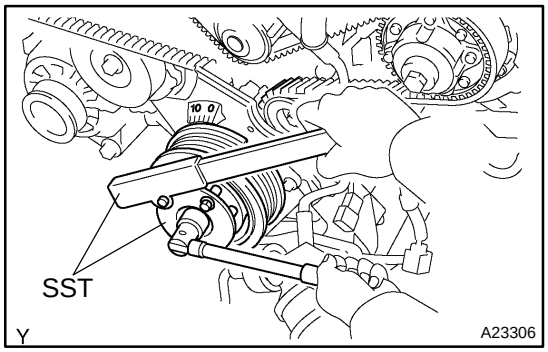

18. TIGHTEN CRANKSHAFT PULLEY BOLT

Using SST, install the pulley bolt.

SST 09213−70011 (90119−08216), 09330−00021

Torque: 245 N·m (2,500 kgf·cm, 181 ft·lbf)

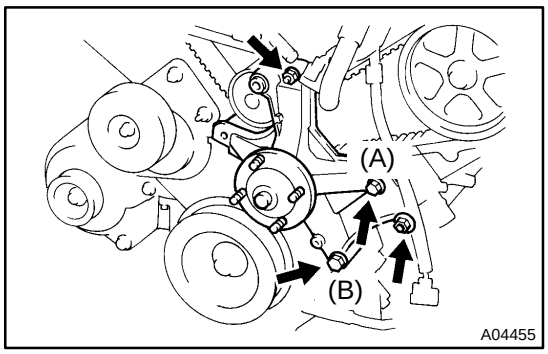

19. INSTALL FAN BRACKET

Install the fan bracket with the 2 bolts and 2 nuts.

Torque:
12 mm head
16 N·m (160 kgf·cm, 12 ft·lbf) for (A)
14 mm head
32 N·m (330 kgf·cm, 24 ft·lbf) for (B)

HINT:

Each bolt length is indicated in the illustration.

Bolt Length:

106 mm (4.17 in.) for 12 mm head (A)

114 mm (4.49 in.) for 14 mm head (B)

20. INSTALL A/C COMPRESSOR (See page EM−83)

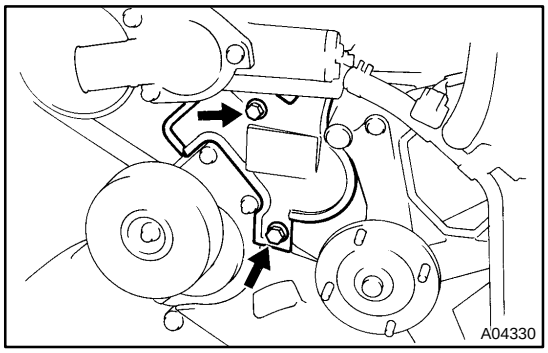

21. INSTALL NO.2 TIMING BELT COVER

Install the No.2 timing belt cover with the 2 bolts.

Torque: 16 N·m (160 kgf·cm, 12 ft·lbf)

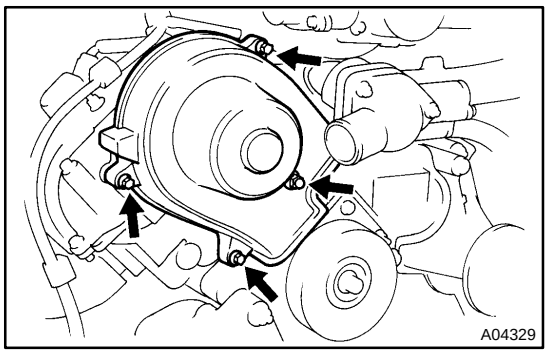

22. INSTALL RH NO.3 TIMING BELT COVER

(a) Fit the RH No.3 timing belt cover, matching it with the fan bracket.

(b) Install the RH No.3 timing belt cover with the 3 bolts and nut.

Torque: 7.5 N·m (76 kgf·cm, 66 in.·lbf)

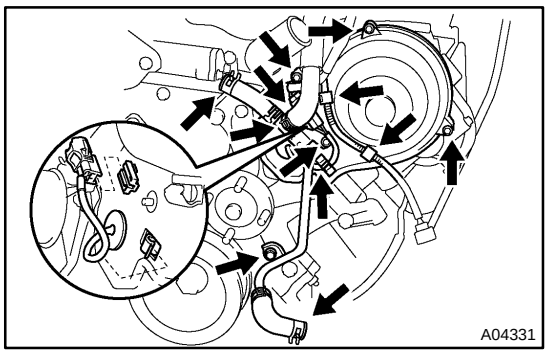

23. INSTALL LH NO.3 TIMING BELT COVER

(a) Install the oil cooler pipe with the bolt and nut.

(b) Run the camshaft position sensor wire through the LH No.3 timing belt cover hole.

(c) Fit the LH No.3 timing belt cover, matching it with the fan bracket.

(d) Install the LH No.3 timing belt cover with the 4 bolts and nut.

Torque: 7.5 N·m (76 kgf·cm, 66 in.·lbf)

(e) Install the wire grommet to the LH No.3 timing belt cover.

(f) Install the camshaft position sensor connector to the connector bracket.

(g) Connect the camshaft position sensor connector.

(h) Install the sensor wire to the wire clamp on the LH No.3 timing belt cover.

(i) Install the engine wire to the 2 wire clamps on the LH No.3 timing belt cover.

24. INSTALL DRIVE BELT IDLER PULLEY

Install the idler pulley and cover plate with the bolt.

Torque: 39 N·m (400 kgf·cm, 29 ft·lbf)

25. INSTALL PS PUMP

Install the PS pump with the 3 bolts.

Torque: 17 N·m (175 kgf·cm, 13 ft·lbf)

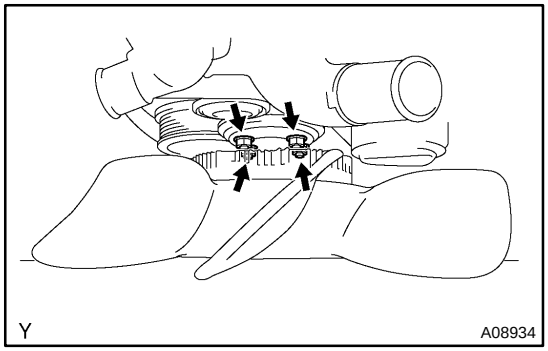

26. INSTALL FAN PULLEY, FAN, FLUID COUPLING AND DRIVE BELT

(a) Temporarily install the fan pulley, the fan, fluid coupling assembly with the 4 nuts.

(b) Install the drive belt. (See page CH−16 and CH−28)

(c) Tighten the 4 nuts holding the fluid coupling to the fan bracket.

Torque: 29 N·m (296kgf·cm, 21 ft·lbf)

27. INTAKE AIR CONNECTOR ASSEMBLY

28. INSTALL THROTTLE BODY COVER

29. INSTALL RADIATOR ASSEMBLY (See page CO−18)

30. FILL WITH ENGINE COOLANT

31. START ENGINE AND CHECK FOR LEAKS

32. RECHECK ENGINE COOLANT LEVEL

33. INSTALL ENGINE UNDER COVER

EM1WX−02

REMOVAL

1. REMOVE ENGINE UNDER COVER

2. DRAIN ENGINE COOLANT

3. REMOVE RADIATOR ASSEMBLY (See page CO−17)

4. REMOVE THROTTLE BODY COVER

5. REMOVE INTAKE AIR CONNECTOR ASSEMBLY

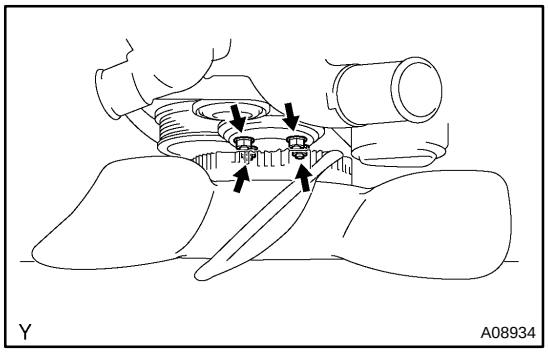

6. REMOVE DRIVE BELT, FAN, FLUID COUPLING AND FAN PULLEY

(a) Loosen the 4 nuts holding the fluid coupling to the fan bracket.

(b) Remove the drive belt. (See page CH−7 and CH−19)

(c) Remove the 4 nuts, the fan, fluid coupling assembly and fan pulley.

7. DISCONNECT PS PUMP

Remove the 3 bolts, and disconnect the PS pump from the engine.

HINT:

Suspend the PS pump securely.

8. REMOVE DRIVE BELT IDLER PULLEY

Remove the pulley bolt, cover plate and idler pulley.

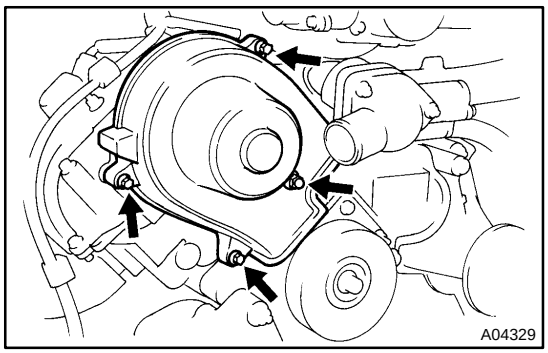

9. REMOVE RH NO.3 TIMING BELT COVER

Remove the 3 bolts, nut and RH No.3 timing belt cover.

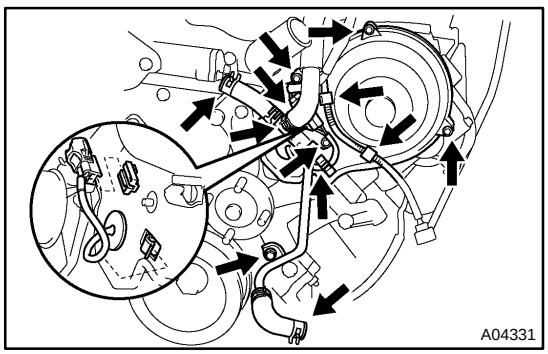

10. REMOVE LH NO.3 TIMING BELT COVER

(a) Disconnect the engine wire from the 2 wire clamps.

(b) Remove the 4 bolts and nut.

(c) Disconnect the camshaft position sensor wire from the wire clamp on the LH No.3 timing belt cover.

(d) Disconnect the camshaft position sensor connector from the connector bracket.

(e) Disconnect the camshaft position sensor connector.

(f) Remove the wire grommet from the LH No.3 timing belt cover.

(g) Remove the LH No.3 timing belt cover.
(h) Remove the bolt, nut and oil cooler pipe.

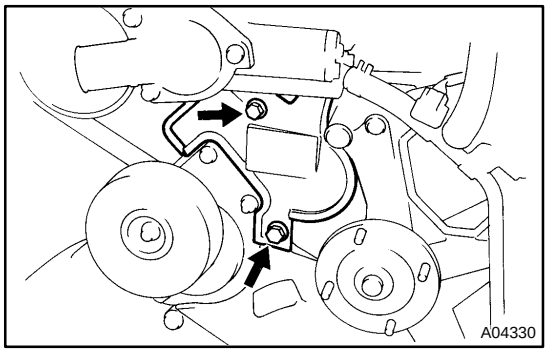

11. REMOVE NO.2 TIMING BELT COVER

Remove the 2 bolts and No.2 timing belt cover.

12. DISCONNECT A/C COMPRESSOR FROM ENGINE (See page EM−79)

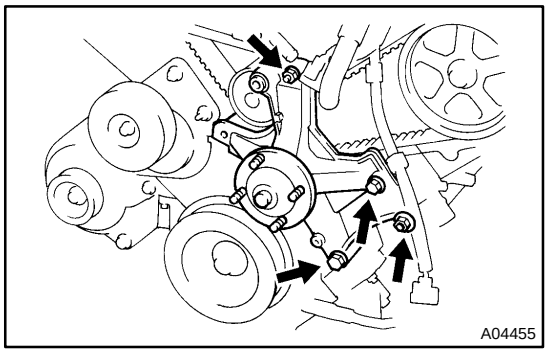

13. REMOVE FAN BRACKET

Remove the 2 bolts, 2 nuts and fan bracket.

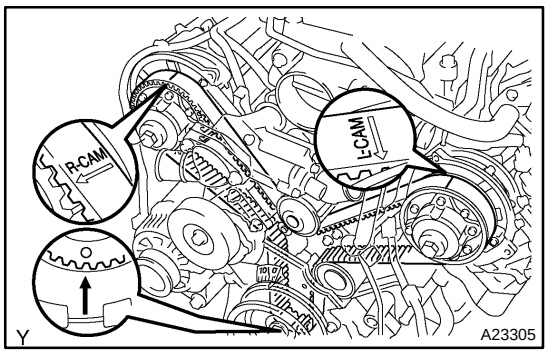

14. IF RE−USING TIMING BELT, CHECK INSTALLATION MARKS ON TIMING BELT

Check that there are 3 installation marks on the timing belt by turning the crankshaft pulley as shown in the illustration.

HINT:

If the installation marks have disappeared, place a new installation mark on the timing belt before removing each part.

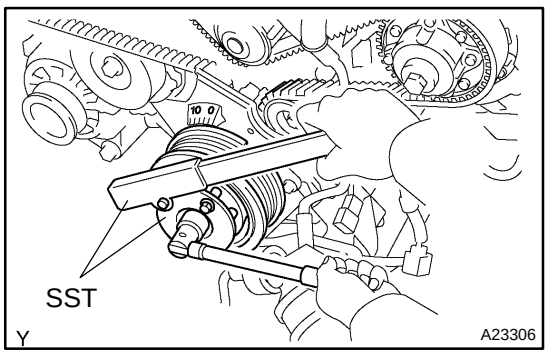

15. LOOSEN CRANKSHAFT PULLEY BOLT

Using SST, loosen the pulley bolt.

SST 09213−70011 (90105−08076), 09330−00021

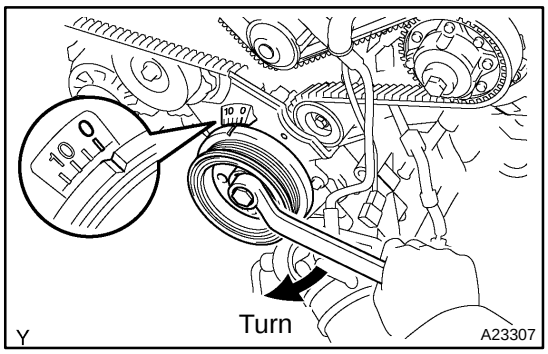

16. SET NO.1 CYLINDER TO TDC/COMPRESSION

(a) Turn the crankshaft pulley and align its groove with timing mark ”0” of the No.1 timing belt cover.

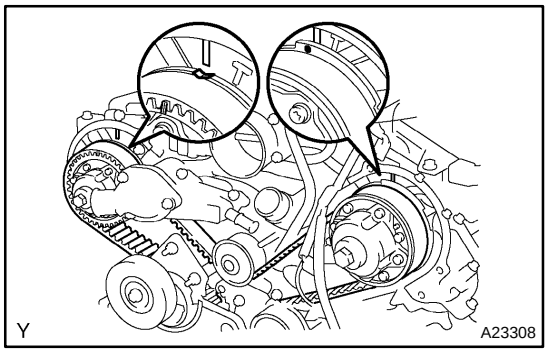

(b) Check that the timing marks of the camshaft timing pulleys and timing belt rear plates are aligned.

If not, turn the crankshaft 1 revolution (360°).

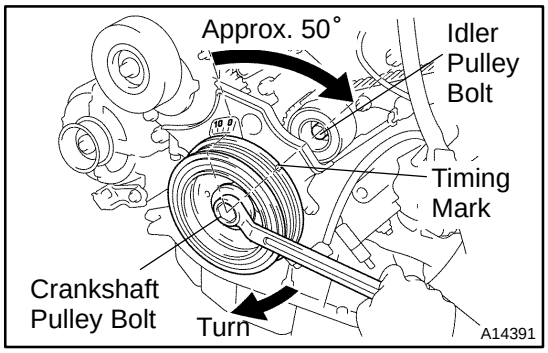

(c) Turn the crankshaft pulley approx. 50° clockwise, and align the timing mark of the crankshaft pulley with the centers of the crankshaft pulley bolt and the No.2 timing belt idler pulley bolt.

NOTICE:

If the timing belt is disengaged, having the crankshaft pulley at the wrong angle can cause the piston head and valve head to come into contact with each other when you remove the camshaft timing pulley (step 15), causing damage. So always set the crankshaft pulley at the correct angle.

(d) Remove the crankshaft pulley bolt.

NOTICE:

Do not turn the crankshaft pulley.

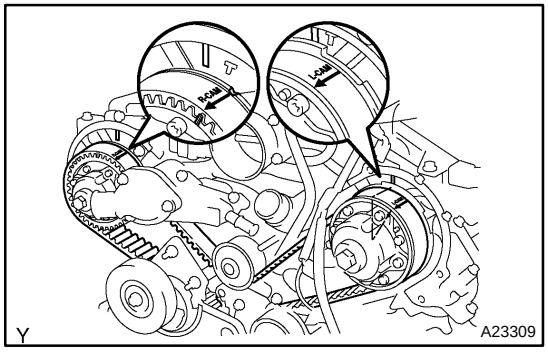

17. REMOVE TIMING BELT TENSIONER

HINT:

- When re−using the timing belt:
  If the installation marks have disappeared, before remove the timing belt, place 2 new installation marks on the timing belt to match the timing marks of the camshaft timing pulleys.

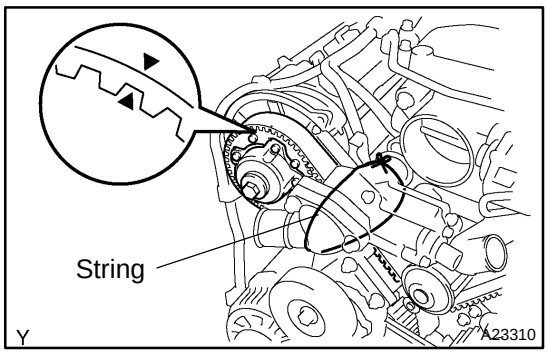

- When replacing the timing belt tensioner only:
  To avoid meshing of the timing pulley and timing belt, secure one of them with string. And place matchmarks on the timing belt and RH camshaft timing pulley.

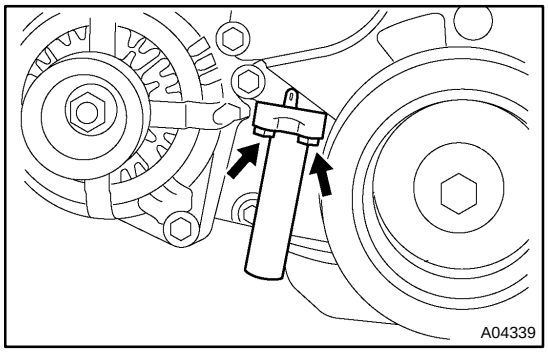

Alternately loosen the 2 bolts, and remove them, the belt tensioner and dust boot.

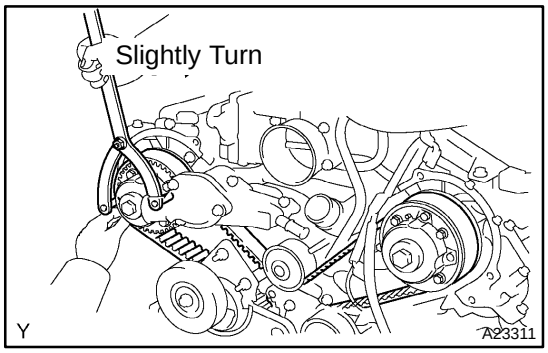

18. DISCONNECT TIMING BELT FROM CAMSHAFT TIMING PULLEYS

(a) Hold the camshaft timing pulley with SST, and loosen the tension spring between the LH and RH camshaft timing pulleys by slightly turning the LH camshaft timing pulley clockwise.
SST 09960−10010 (09962−01000, 09963−01000)

HINT:
Set the SST so that the claw comes in contact with the camshaft timing pulley bolt, and tighten the lock nut of the SST.

(b) Disconnect the timing belt from the camshaft timing pulleys.

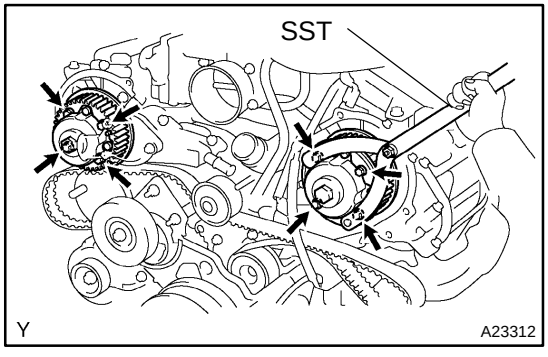

19. REMOVE CAMSHAFT TIMING PULLEYS

(a) Hold the camshaft timing pulley with SST, loosen the 4 bolts of the timing pulley.
SST 09960−10010 (09962−01000, 09963−01000)

(b) Remove the 2 timing pulleys.

20. REMOVE GENERATOR
(See page CH−7 and CH−19)

21. REMOVE DRIVE BELT TENSIONER

Remove the bolt, 2 nuts and belt tensioner.

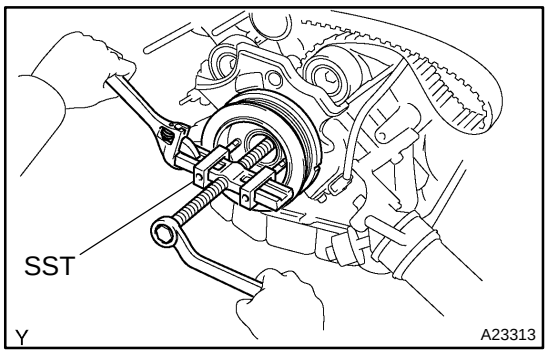

22. REMOVE CRANKSHAFT PULLEY

Using SST, remove the crankshaft pulley.

SST 09950−50013 (09951−05010, 09952−05010, 09953−05010, 09953−05020, 09954−05021)

NOTICE:

Do not turn the crankshaft pulley.

23. REMOVE NO.1 TIMING BELT COVER

Remove the 4 bolts and timing belt cover.

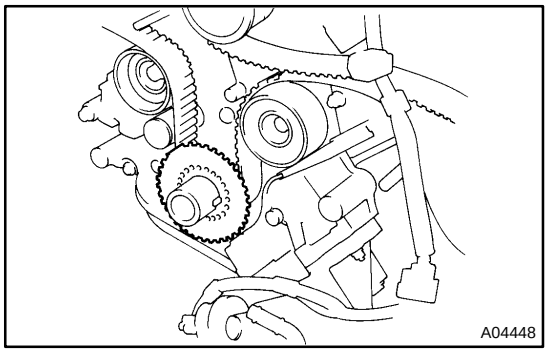

24. REMOVE TIMING BELT GUIDE

25. REMOVE TIMING BELT COVER SPACER

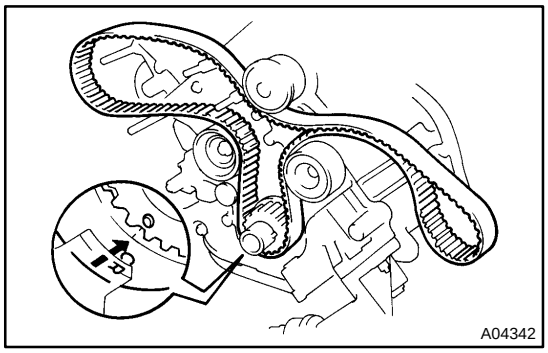

26. REMOVE TIMING BELT

HINT:

If re−using the belt and the installation mark has disappeared from it, place a new installation mark on the timing belt to the match the dot mark of the crankshaft timing pulley.

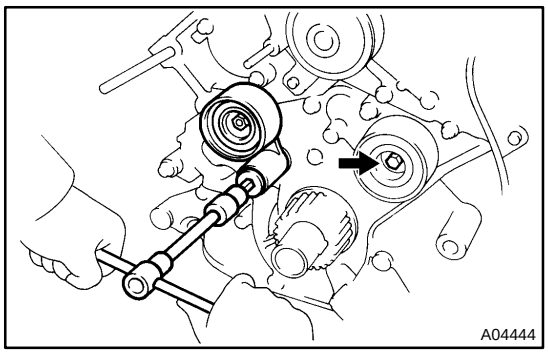

27. REMOVE NO.1 IDLER PULLEY AND NO.2 IDLER PULLEY

(a) Using a 10 mm hexagon wrench, remove the bolt, No.1 idler pulley and plate washer.

(b) Remove the bolt and No.2 idler pulley.

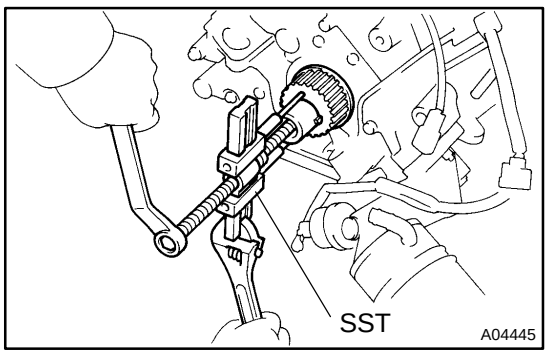

28. REMOVE CRANKSHAFT TIMING PULLEY

Using SST, remove the timing pulley.

SST 09950−50013 (09951−05010, 09952−05010, 09953−05010, 09953−05020, 09954−05011)

NOTICE:

Do not turn the timing pulley.

VALVE CLEARANCE

INSPECTION

EM0KS−10

HINT:

Inspect and adjust the valve clearance when the engine is cold.

1. REMOVE BATTERY CLAMP COVER

2. REMOVE THROTTLE BODY COVER

3. REMOVE AIR CLEANER AND INTAKE AIR CONNECTOR ASSEMBLY

4. REMOVE NO.3 TIMING BELT COVERS
(See page EM−16)

5. REMOVE IGNITION COILS (See page IG−5)

6. REMOVE RH CYLINDER HEAD COVER

Remove the 9 bolts, seal washers and cylinder head cover.

7. REMOVE LH CYLINDER HEAD COVER

(a) Remove the oil dipstick for the transmission.

(b) Disconnect the PCV hose.

(c) Disconnect the engine wire clamp from the wire bracket on the cylinder head cover.

(d) Remove the 9 bolts, 9 seal washers and cylinder head cover.

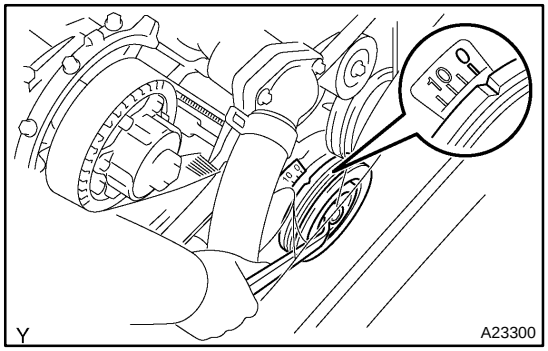

8. SET NO.1 CYLINDER TO TDC/COMPRESSION

(a) Turn the crankshaft pulley, and align its groove with timing mark ”0” of the No.1 timing belt cover.

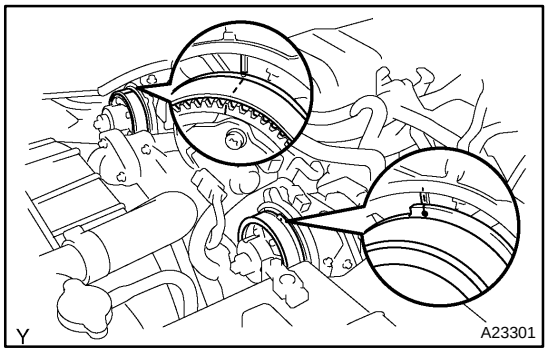

(b) Check that the timing marks of the camshaft timing pulleys and timing belt rear plates are aligned.

If not, turn the crankshaft 1 revolution (360˚) and align the mark as above.

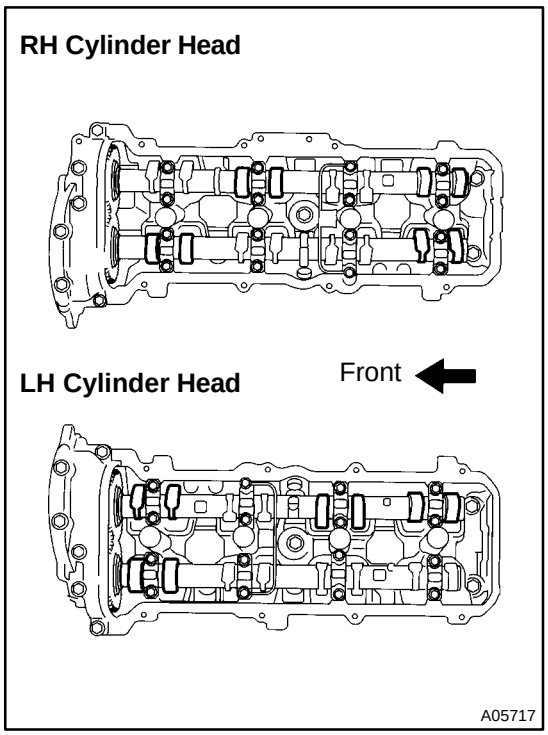

9. INSPECT VALVE CLEARANCE

(a) Check only the valves indicated.

- Using a feeler gauge, measure the clearance between the valve lifter and camshaft.
- Record the out−of−specification valve clearance measurements. They will be used later to determine the required replacement adjusting shim.

Valve clearance (Cold):

Intake	0.15 − 0.25 mm (0.006 − 0.010 in.)
Exhaust	0.25 − 0.35 mm (0.010 − 0.014 in.)

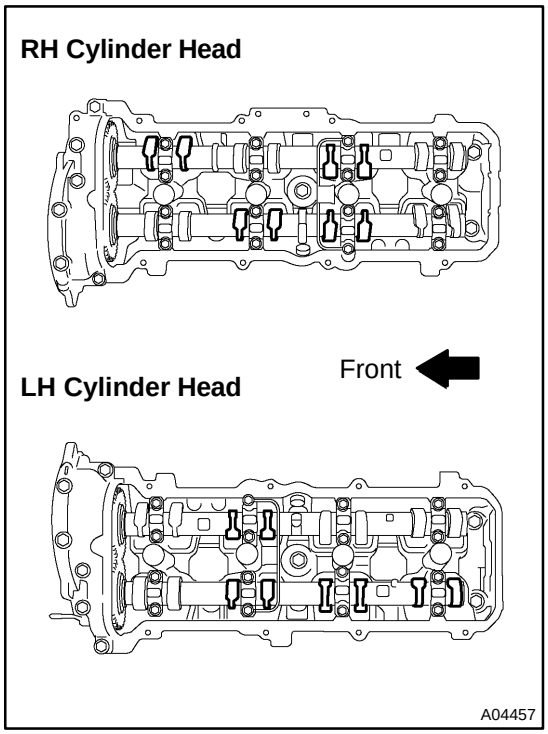

(b) Turn the crankshaft 1 revolution (360°) and align the mark as above. (See procedure in step 8)

(c) Check only the valves indicated as shown. Measure the valve clearance. (See procedure in step (a))

10. ADJUST VALVE CLEARANCE

(a) Remove the timing belt. (See page EM−16)

(b) Remove the camshafts. (See page EM−36)

(c) Remove the valve lifter and adjusting shim.

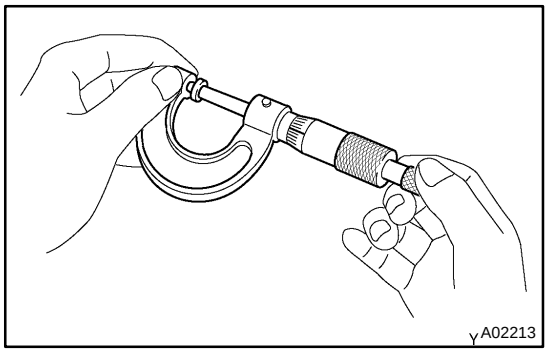

(d) Determine the replacement adjusting shim size according to these Formula or Charts:

(1) Using a micrometer, measure the thickness of the removed shim.

(2) Calculate the thickness of a new shim so that the valve clearance comes within the specified value.

T ..... Thickness of removed shim

A ..... Measured valve clearance

N ..... Thickness of new shim

Intake: N = T + (A − 0.20 mm (0.008 in.))

Exhaust: N = T + (A − 0.30 mm (0.012 in.))

(3) Select a new shim with thickness as close as possible to the calculated value.

HINT:

Shims are available in 41 increments of 0.020 mm (0.0008 in.), from 2.00 mm (0.0787 in.) to 2.80 mm (0.1102 in.).

(e) Place a new adjusting shim on the valve.

(f) Place the valve lifter.

(g) Reinstall the camshafts. (See page EM−60)

(h) Reinstall the timing belt. (See page EM−23)

(i) Recheck the valve clearance.

11. REINSTALL CYLINDER HEAD COVERS

12. REINSTALL IGNITION COILS

13. REINSTALL NO.3 TIMING BELT COVERS (See page EM−23)

14. REINSTALL AIR CLEANER AND INTAKE AIR CONNECTOR ASSEMBLY

15. REINSTALL THROTTLE BODY COVER

16. REINSTALL BATTERY CLAMP COVER

Adjusting Shim Selection Chart (Intake)

Measured clearance mm (in.) \ Installed shim thickness mm (in.)	2.000 (0.0787)	2.020 (0.0795)	2.040 (0.0803)	2.060 (0.0811)	2.080 (0.0819)	2.100 (0.0827)	2.120 (0.0835)	2.140 (0.0843)	2.160 (0.0850)	2.180 (0.0858)	2.200 (0.0866)	2.210 (0.0870)	2.220 (0.0874)	2.230 (0.0878)	2.240 (0.0882)	2.250 (0.0886)	2.260 (0.0890)	2.270 (0.0894)	2.280 (0.0898)	2.290 (0.0902)	2.300 (0.0906)	2.310 (0.0909)	2.320 (0.0913)	2.330 (0.0917)	2.340 (0.0921)	2.350 (0.0925)	2.360 (0.0929)	2.370 (0.0933)	2.380 (0.0937)	2.390 (0.0941)	2.400 (0.0945)	2.410 (0.0949)	2.420 (0.0953)	2.430 (0.0957)	2.440 (0.0961)	2.450 (0.0965)	2.460 (0.0969)	2.470 (0.0972)	2.480 (0.0976)	2.490 (0.0980)	2.500 (0.0984)	2.510 (0.0988)	2.520 (0.0992)	2.530 (0.0996)	2.540 (0.1000)	2.550 (0.1004)	2.560 (0.1008)	2.570 (0.1012)	2.580 (0.1016)	2.590 (0.1020)	2.600 (0.1024)	2.620 (0.1031)	2.640 (0.1039)	2.660 (0.1047)	2.680 (0.1055)	2.700 (0.1063)	2.720 (0.1071)	2.740 (0.1079)	2.760 (0.1087)	2.780 (0.1094)	2.800 (0.1102)
0.000−0.030 (0.0000−0.0012)							00	00	00	00	02	02	04	04	06	06	08	08	10	10	12	12	14	14	16	16	18	18	20	20	22	22	24	24	26	26	28	28	30	30	32	32	34	34	36	36	38	38	40	40	42	44	46	48	50	52	54	56	58	60	62
0.031−0.050 (0.0012−0.0020)						00	00	00	00	02	04	06	06	08	08	10	10	12	12	14	14	16	16	18	18	20	20	22	22	24	24	26	26	28	28	30	30	32	32	34	34	36	36	38	38	40	40	42	42	44	44	46	48	50	52	54	56	58	60	62	64
0.051−0.070 (0.0020−0.0028)					00	00	00	00	02	04	06	08	08	10	10	12	12	14	14	16	16	18	18	20	20	22	22	24	24	26	26	28	28	30	30	32	32	34	34	36	36	38	38	40	40	42	42	44	44	46	46	48	50	52	54	56	58	60	62	64	66
0.071−0.090 (0.0028−0.0035)				00	00	00	00	02	04	06	08	10	10	12	12	14	14	16	16	18	18	20	20	22	22	24	24	26	26	28	28	30	30	32	32	34	34	36	36	38	38	40	40	42	42	44	44	46	46	48	48	50	52	54	56	58	60	62	64	66	68
0.091−0.110 (0.0036−0.0043)			00	00	00	00	02	04	06	08	10	12	12	14	14	16	16	18	18	20	20	22	22	24	24	26	26	28	28	30	30	32	32	34	34	36	36	38	38	40	40	42	42	44	44	46	46	48	48	50	50	52	54	56	58	60	62	64	66	68	70
0.111−0.130 (0.0044−0.0051)		00	00	00	00	02	04	06	08	10	12	14	14	16	16	18	18	20	20	22	22	24	24	26	26	28	28	30	30	32	32	34	34	36	36	38	38	40	40	42	42	44	44	46	46	48	48	50	50	52	52	54	56	58	60	62	64	66	68	70	72
0.131−0.149 (0.0052−0.0059)		00	00	00	02	04	06	08	10	12	14	16	16	18	18	20	20	22	22	24	24	26	26	28	28	30	30	32	32	34	34	36	36	38	38	40	40	42	42	44	44	46	46	48	48	50	50	52	52	54	54	56	58	60	62	64	66	68	70	72	74
0.150−0.250 (0.0059−0.0098)						

Adjusting Shim Selection Chart (Exhaust)

Measured clearance mm (in.) \ Installed shim thickness mm (in.)	2.000 (0.0787)	2.020 (0.0795)	2.040 (0.0803)	2.060 (0.0811)	2.080 (0.0819)	2.100 (0.0827)	2.120 (0.0835)	2.140 (0.0843)	2.160 (0.0850)	2.180 (0.0858)	2.200 (0.0866)	2.210 (0.0870)	2.220 (0.0874)	2.230 (0.0878)	2.240 (0.0882)	2.250 (0.0886)	2.260 (0.0890)	2.270 (0.0894)	2.280 (0.0898)	2.290 (0.0902)	2.300 (0.0906)	2.310 (0.0909)	2.320 (0.0913)	2.330 (0.0917)	2.340 (0.0921)	2.350 (0.0925)	2.360 (0.0929)	2.370 (0.0933)	2.380 (0.0937)	2.390 (0.0941)	2.400 (0.0945)	2.410 (0.0949)	2.420 (0.0953)	2.430 (0.0957)	2.440 (0.0961)	2.450 (0.0965)	2.460 (0.0969)	2.470 (0.0972)	2.480 (0.0976)	2.490 (0.0980)	2.500 (0.0984)	2.510 (0.0988)	2.520 (0.0992)	2.530 (0.0996)	2.540 (0.1000)	2.550 (0.1004)	2.560 (0.1008)	2.570 (0.1012)	2.580 (0.1016)	2.590 (0.1020)	2.600 (0.1024)	2.620 (0.1031)	2.640 (0.1039)	2.660 (0.1047)	2.680 (0.1055)	2.700 (0.1063)	2.720 (0.1071)	2.740 (0.1079)	2.760 (0.1087)	2.780 (0.1094)	2.800 (0.1102)
0.000–0.030 (0.0000–0.0012)											00	00	00	00	00	00	00	00	00	02	02	04	04	06	06	08	08	10	10	12	12	14	14	16	16	18	18	20	20	22	22	24	24	26	26	28	28	30	30	32	34	36	38	40	42	44	46	48	50	52
0.031–0.050 (0.0012–0.0020)										00	00	00	00	00	00	00	00	00	02	02	04	04	06	06	08	08	10	10	12	12	14	14	16	16	18	18	20	20	22	22	24	24	26	26	28	28	30	30	32	32	34	34	36	38	40	42	44	46	48	50	52	54
0.051–0.070 (0.0020–0.0028)									00	00	00	00	00	00	02	02	04	04	06	06	08	08	10	10	12	12	14	14	16	16	18	18	20	20	22	22	24	24	26	26	28	28	30	30	32	32	34	34	36	36	38	40	42	44	46	48	50	52	54	56
0.071–0.090 (0.0028–0.0035)								00	00	00	00	00	02	02	04	04	06	06	08	08	10	10	12	12	14	14	16	16	18	18	20	20	22	22	24	24	26	26	28	28	30	30	32	32	34	34	36	36	38	38	40	42	44	46	48	50	52	54	56	58
0.091–0.110 (0.0036–0.0043)							00	00	00	00	00	02	02	04	04	06	06	08	08	10	10	12	12	14	14	16	16	18	18	20	20	22	22	24	24	26	26	28	28	30	30	32	32	34	34	36	36	38	38	40	40	42	44	46	48	50	52	54	56	58	60
0.111–0.130 (0.0044–0.0051)						00	00	00	00	02	04	04	06	06	08	08	10	10	12	12	14	14	16	16	18	18	20	20	22	22	24	24	26	26	28	28	30	30	32	32	34	34	36	36	38	38	40	40	42	42	44	46	48	50	52	54	56	58	60	62
0.131–0.150 (0.0052–0.0059)					00	00	00	00	02	04	06	06	08	08	10	10	12	12	14	14	16	16	18	18	20	20	22	22	24	24	26	26	28	28	30	30	32	32	34	34	36	36	38	38	40	40	42	42	44	44	46	48	50	52	54	56	58	60	62	64
0.151–0.170 (0.0059–0.0067)				00	00	00	00	02	04	06	08	08	10	10	12	12	14	14	16	16	18	18	20	20	22	22	24	24	26	26	28	28	30	30	32	32	34	34	36	36	38	38	40	40	42	42	44	44	46	46	48	50	52	54	56	58	60	62	64	66
0.171–0.190 (0.0067–0.0075)				00	00	00	00	02	04	06	08	10	10	12	12	14	14	16	16	18	18	20	20	22	22	24	24	26	26	28	28	30	30	32	32	34	34	36	36	38	38	40	40	42	42	44	44	46	46	48	48	50	52	54	56	58	60	62	64	66	68
0.191–0.210 (0.0075–0.0083)			00	00	00	00	02	04	06	08	10	12	12	14	14	16	16	18	18	20	20	22	22	24	24	26	26	28	28	30	30	32	32	34	34	36	36	38	38	40	40	42	42	44	44	46	46	48	48	50	50	52	54	56	58	60	62	64	66	68	70
0.211–0.230 (0.0083–0.0091)		00	00	00	00	02	04	06	08	10	12	14	14	16	16	18	18	20	20	22	22	24	24	26	26	28	28	30	30	32	32	34	34	36	36	38	38	40	40	42	42	44	44	46	46	48	48	50	50	52	52	54	56	58	60	62	64	66	68	70	72
0.231–0.249 (0.0091–0.0098)		00	00	00	02	04	06	08	10	12	14	16	16	18	18	20	20	22	22	24	24	26	26	28	28	30	30	32	32	34	34	36	36	38	38	40	40	42	42	44	44	46	46	48	48	50	50	52	52	54	54	56	58	60	62	64	66	68	70	72	74
0.250–0.350 (0.0098–0.0138)										

IG0MN−01

INSPECTION

INSPECT CRANKSHAFT POSITION SENSOR

Using an ohmmeter, measure the resistance between the terminals.

RESISTANCE:

1,630 to 2,740 Ω at cold

2,065 to 3,225 Ω at hot

NOTICE:

”Cold” and ”Hot” mean the temperature of the coils themselves. ”Cold” is from −10°C (14°F) to 50°C (122°F) and ”Hot” is from 50°C (122°F) to 100 °C (212°F).

IG0MO−01

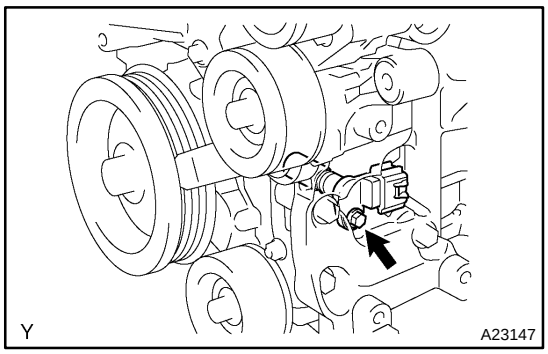

INSTALLATION

1. INSTALL CRANKSHAFT POSITION SENSOR

(a) Apply a light coat of engine oil to an O−ring of the crankshaft position sensor.

(b) Install the crankshaft position sensor with the bolt.
Torque: 10 N·m (102 kgf·cm, 7 ft·lbf)

(c) Connect the crankshaft position sensor connector.

2. INSTALL COOLER COMPRESSOR

(a) Install the cooler compressor assy with the 4 bolts.
Torque: 25 N·m (255 kgf·cm, 18 ft·lbf)

(b) Connect the cooler compressor assy connector.

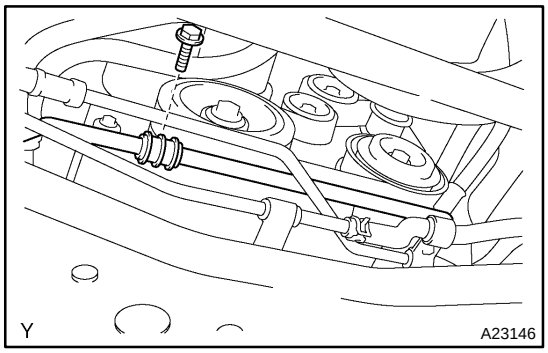

(c) Install the suction hose sub−assy with the bolt.
Torque: 8.0 N·m (82 kgf·cm, 71 in.·lbf)

3. INSTALL GENERATOR (See page CH−15)

4. INSTALL ENGINE UNDER COVER

CRANKSHAFT POSITION SENSOR

IG0MM−01

REMOVAL

1. REMOVE ENGINE UNDER COVER

2. REMOVE GENERATOR (See page CH−7)

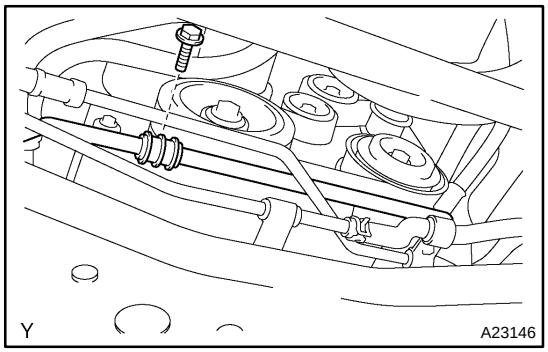

3. SEPARATE COOLER COMPRESSOR

(a) Remove the bolt and separate the suction hose sub−assy.

(b) Disconnect the cooler compressor assy connector.

(c) Remove the 4 bolts, and separate the cooler compressor from the V−ribbed belt tensioner.

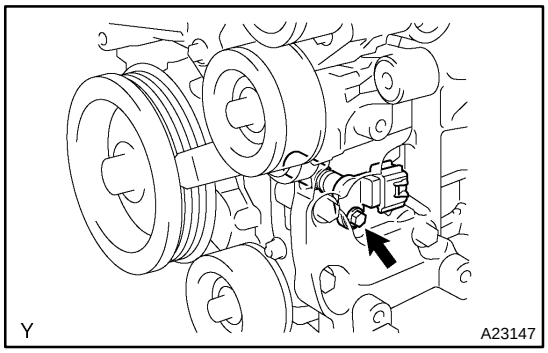

4. REMOVE CRANKSHAFT POSITION SENSOR

(a) Disconnect the crankshaft position sensor connector.

(b) Remove the bolt and crankshaft position sensor.

IGNITION COIL

COMPONENTS

IG0MJ−01

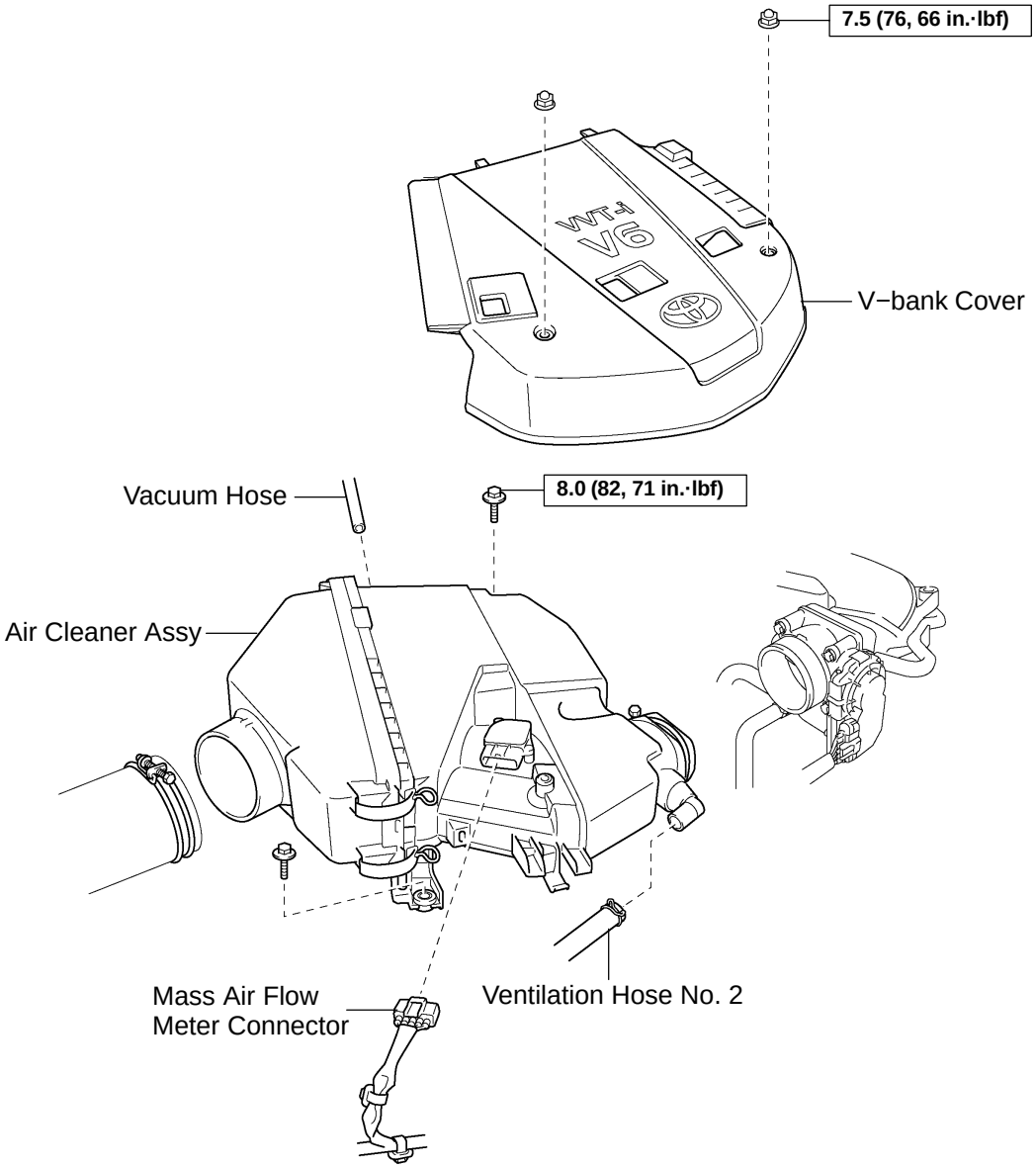

N·m (kgf·cm, ft·lbf): Specified torque

Y

A23082

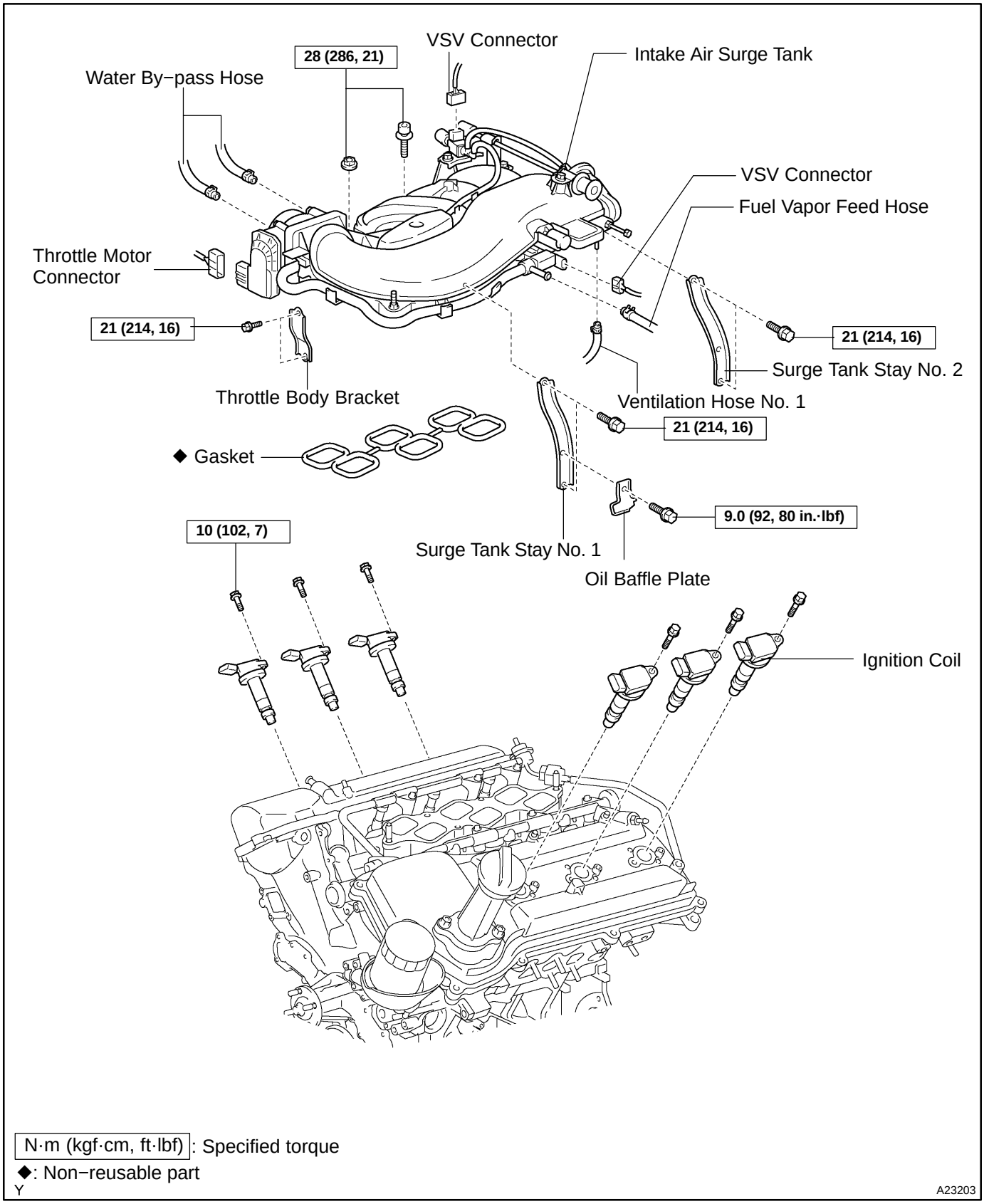

N·m (kgf·cm, ft·lbf): Specified torque

◆: Non−reusable part

Y

A23203

IG0ML−01

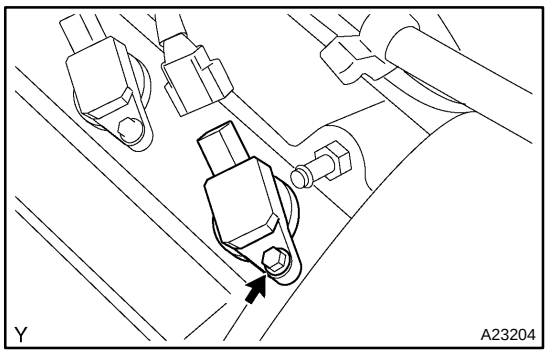

INSTALLATION

1. INSTALL IGNITION COIL

(a) Install the ignition coil with the bolt.
Torque: 10 N·m (102 kgf·cm, 7 ft·lbf)

(b) Connect the ignition coil connector.

2. INSTALL INTAKE AIR SURGE TANK (See page EM−89)

3. INSTALL AIR CLEANER (See page EM−89)

4. INSTALL V−BANK COVER

IG0MK−01

REMOVAL

1. REMOVE V−BANK COVER

2. REMOVE AIR CLEANER (See page EM−62)

3. REMOVE INTAKE AIR SURGE TANK (See page EM−62)

4. REMOVE IGNITION COIL

(a) Disconnect the ignition coil connector.

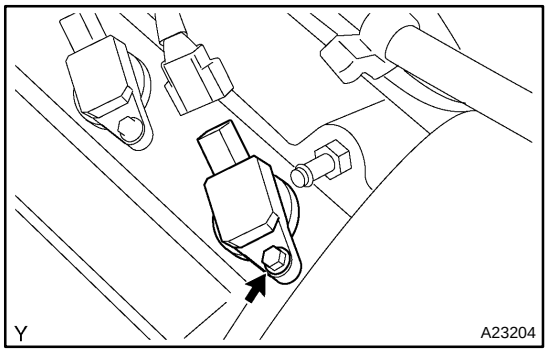

(b) Remove the bolt and ignition coil.

IGNITION SYSTEM

IG0MI−01

ON−VEHICLE INSPECTION

NOTICE:

"Cold" and "Hot" in this section mean the temperature of the coils themselves. "Cold" is from −10°C (14°F) to 50°C (122°F) and "Hot" is from 50°C (122°F) to 100°C (212°F).

1. INSPECT IGNITION COIL AND SPARK TEST

(a) Confirm DTCs.

NOTICE:

If a DTC is present, perform troubleshooting in accordance with the procedure for that DTC.

(b) Check that spark occurs.

(1) Remove the ignition coils.
(2) Using a 16 mm (0.63 in) plug wrench, remove the spark plugs.
(3) Install the spark plugs to each ignition coil, and connect the ignition coil connectors.
(4) Disconnect the 6 injector connectors.
(5) Ground the spark plugs.
(6) Check if spark occurs while the engine is being cranked.

NOTICE:

- **Be sure to ground the spark plugs when checking.**
- **Replace the ignition coil when subjected to an impact.**
- **Do not crank the engine for more than 2 seconds.**

If spark does not occur, do the test as follows:

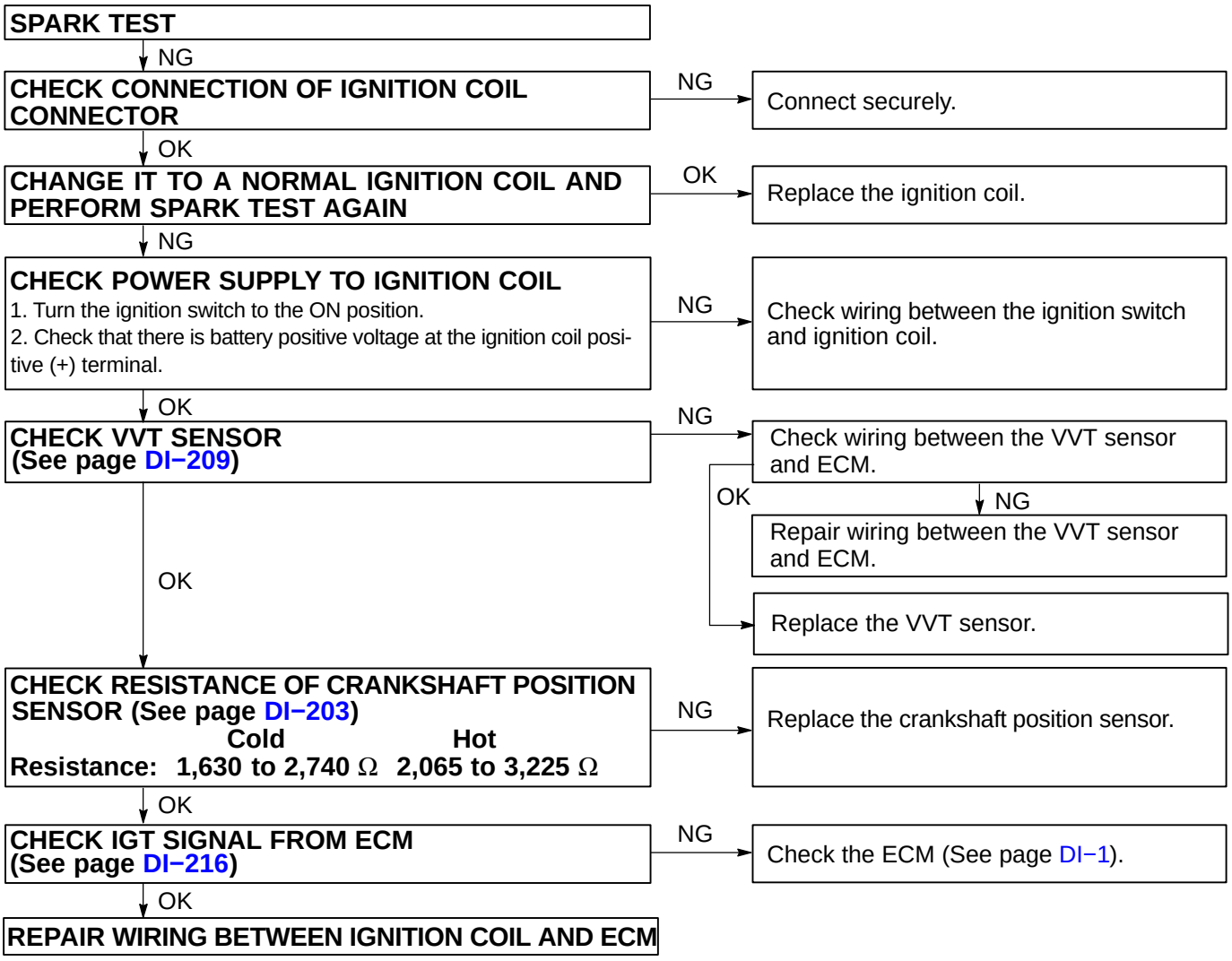

(c) Using a 16 mm (0.63 in.) plug wrench, install the spark plugs.
Torque: 18 N·m (184 kgf·cm, 13 ft·lbf)

(d) Install the ignition coils.
Torque: 10 N·m (102 kgf·cm, 7 ft·lbf)

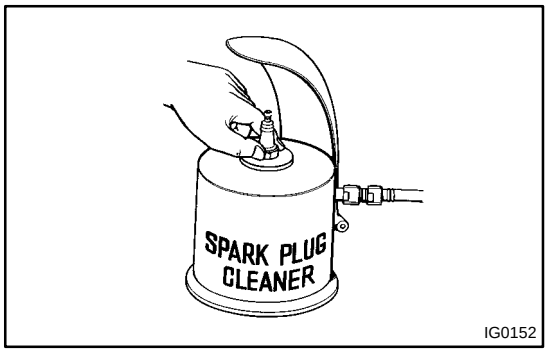

2. INSPECT SPARK PLUGS

(a) Clean the spark plugs.
Air pressure: Below 588 kPa (6 kg/cm^2, 85 psi)
Duration: 20 seconds or less

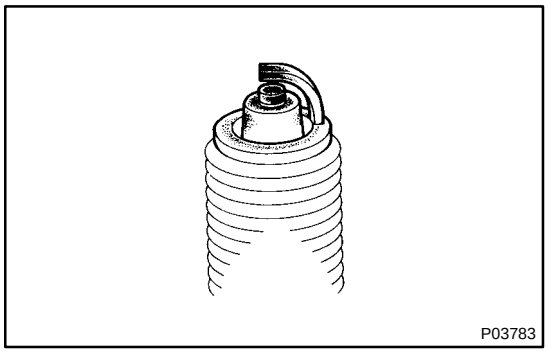

(b) Check the spark plug for any damage to its thread and insulator.

If there is damage, replace the spark plug.
Recommended spark plug:

NGK made	LFR6C−11
DENSO made	K20HR−U11

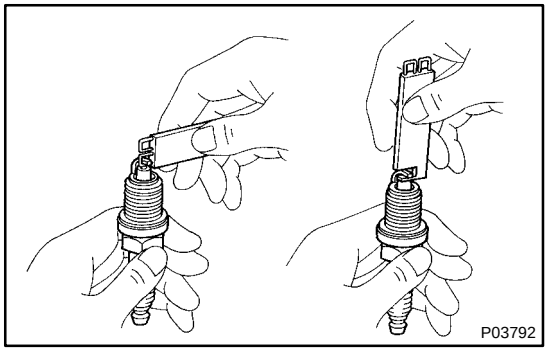

(c) Adjust electrode gap.
Electrode gap: 1.0 to 1.1 mm (0.039 to 0.043 in.)
Maximum electrode gap: 1.46 mm (0.057 in.)

3. CHECK VVT SENSOR OUTPUT VOLTAGE

(a) Turn the ignition switch to the ON position.

(b) Check that the voltage between terminal VC1 of the ECM and ground is 5 V.

HINT:

For the terminal arrangement of the ECM, see page DI−34.

(c) While turning the crankshaft pulley by hand, measure the voltage between each terminal. Check that the voltage changes between the Hi range and Lo range as shown in the table below.

HINT:

For the terminal arrangement of the ECM, see page DI−34.

Sensor position	Terminal No.	Voltage (Hi)	Voltage (Lo)
Bank 1	VV1+ ↔ VV1−	3.75 to 4.5 V	0.5 to 1.25 V
Bank 2	VV2+ ↔ VV2−	3.75 to 4.5 V	0.5 to 1.25 V

4. INSPECT CRANKSHAFT POSITION SENSOR

(a) Using an ohmmeter, measure the resistance between the terminals.

RESISTANCE:

1630 to 2740 Ω at cold

2065 to 3225 Ω at hot

NOTICE:

"Cold" and "Hot" mean the temperature of the coils themselves. "Cold" is from −10°C (14°F) to 50°C (122°F) and "Hot" is from 50°C (122°F) to 100°C (212°F).

IG0MQ−01

INSTALLATION

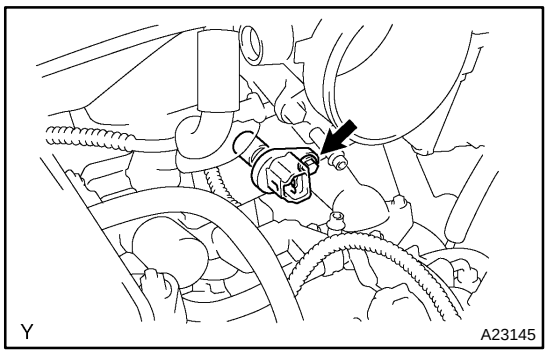

1. INSTALL VVT SENSOR

(a) LH bank side VVT sensor.

(1) Apply a light coat of engine oil to an O−ring of the VVT sensor.

(2) Install the VVT sensor with the bolt.

Torque: 9.0 N·m (92 kgf·cm, 80 in.·lbf)

(3) Connect the VVT sensor connector.

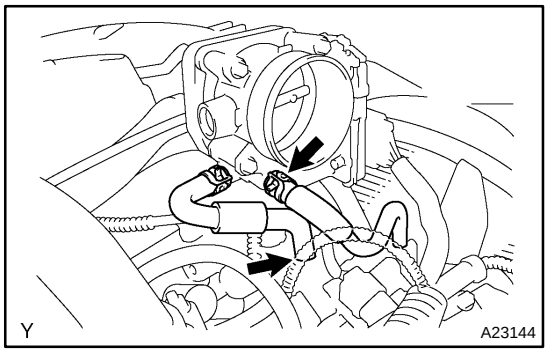

(4) Connect the water by−pass hose No. 4 and No. 5.

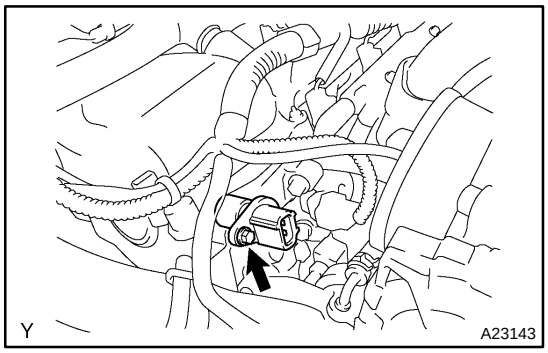

(b) RH bank side VVT sensor.

(1) Apply a light coat of engine oil to an O−ring of the VVT sensor.

(2) Install the VVT sensor with the bolt.

Torque: 9.0 N·m (92 kgf·cm, 80 in.·lbf)

(3) Connect the VVT sensor connector.

2. INSTALL AIR CLEANER (See page EM−89)

3. INSTALL V−BANK COVER

4. ADD ENGINE COOLANT

VVT SENSOR

IG0MP−01

REMOVAL

1. **DRAIN ENGINE COOLANT**
2. **REMOVE V−BANK COVER**
3. **REMOVE AIR CLEANER (See page EM−62)**

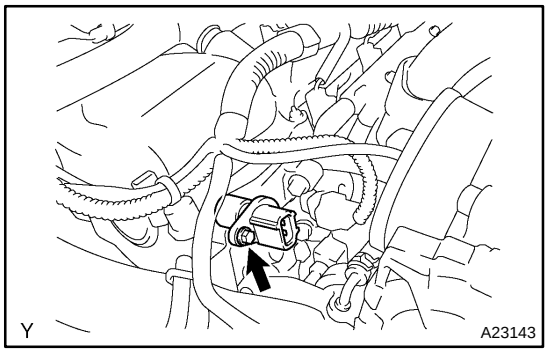

4. **REMOVE VVT SENSOR**

(a) RH bank side VVT sensor.

(1) Disconnect the VVT sensor connector.

(2) Remove the bolt and VVT sensor.

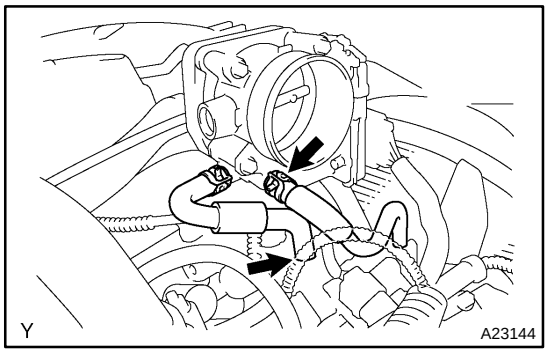

(b) LH bank side VVT sensor.

(1) Disconnect the water by−pass hose No. 4 and No. 5 .

(2) Disconnect the VVT sensor connector.

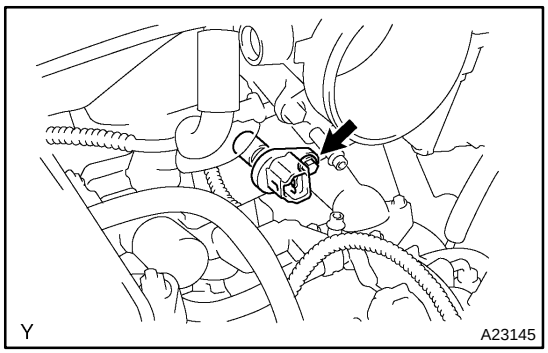

(3) Remove the bolt and VVT sensor.

CAMSHAFT POSITION SENSOR

IG08T−08

COMPONENTS

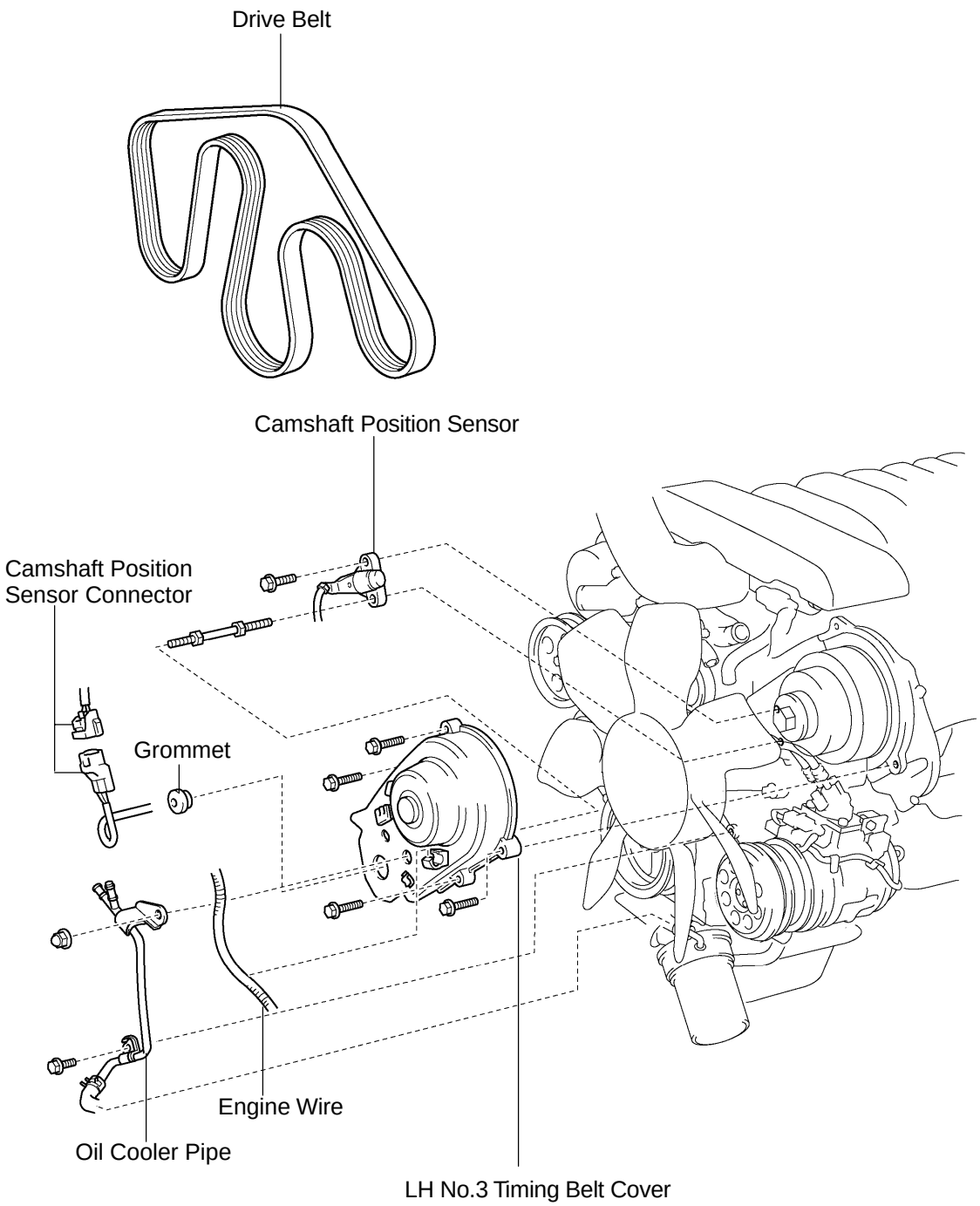

Y

B17486

IG08V−07

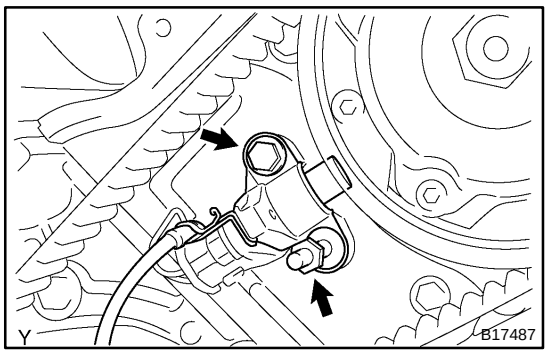

INSTALLATION

1. INSTALL CAMSHAFT POSITION SENSOR

Install the camshaft position sensor with the bolt and stud bolt

Torque: 7.5 N·m (80 kgf·cm, 66 in.·lbf)

2. INSTALL LH NO.3 TIMING BELT COVER
(See page EM−23)

3. INSTALL DRIVE BELT
(See page CH−16 and CH−28)

4. FILL ENGINE COOLANT (See page CO−2)

5. CHECK ENGINE COOLANT FOR LEAKS

6. CHECK IGNITION TIMING (See page EM−9)

IG08U−09

REMOVAL

1. DRAIN ENGINE COOLANT
2. REMOVE DRIVE BELT
   (See page CH−7 and CH−19)
3. REMOVE LH NO.3 TIMING BELT COVER
   (See page EM−16)

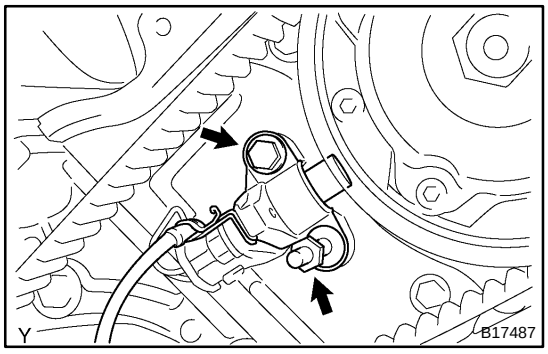

4. REMOVE CAMSHAFT POSITION SENSOR

Remove the bolt, stud bolt and camshaft position sensor.

CRANKSHAFT POSITION SENSOR

IG08W−06

COMPONENTS

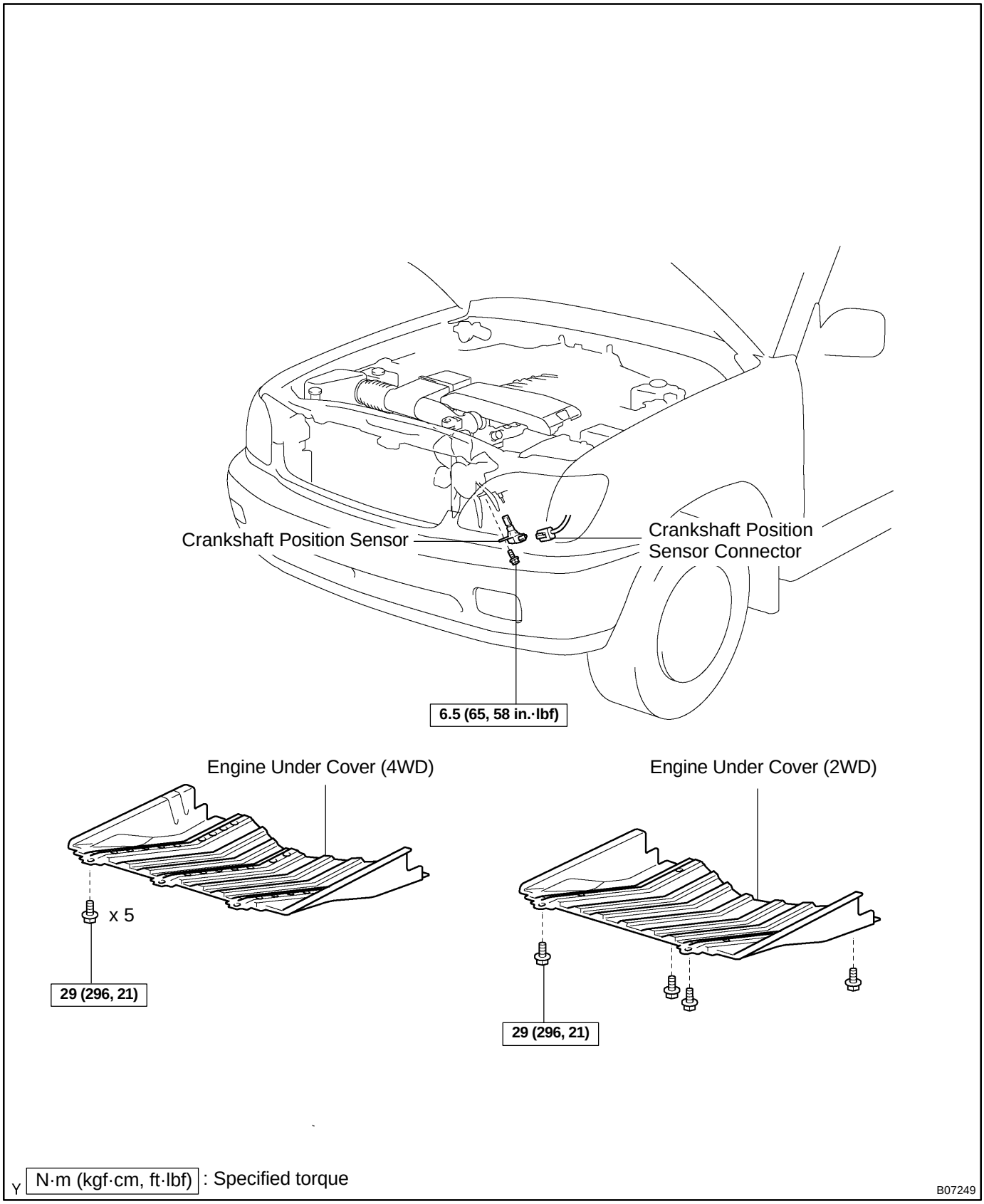

Y N·m (kgf·cm, ft·lbf) : Specified torque

B07249

IG0EL−05

INSPECTION

NOTICE:

”Cold” and ”Hot” in these sentences express the temperature of the coils themselves. ”Cold” is from −10˚C (14˚F) to 50˚C (122˚F) and ”Hot” is from 50˚C (122˚F) to 100˚C (212˚F).

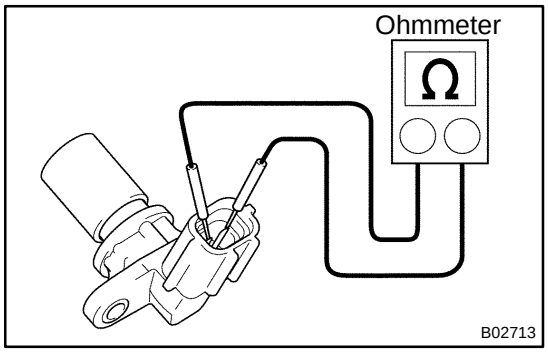

INSPECT CRANKSHAFT POSITION SENSOR

Using an ohmmeter, measure the resistance between the terminals.

Resistance:

Cold	1,630 to 2,740 Ω
Hot	2,065 to 3,225 Ω

If the resistance is not as specified, replace the crankshaft position sensor.

IG0EM−04

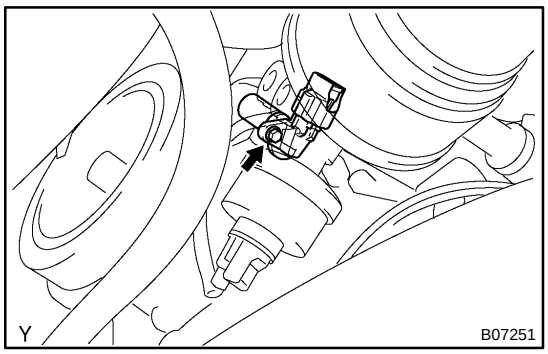

INSTALLATION

1. INSTALL CRANKSHAFT POSITION SENSOR

(a) Install the crankshaft position sensor with the bolt.
Torque: 6.5 N·m (65 kgf·cm, 58 in.·lbf)

(b) Connect the crankshaft position sensor connector.

2. INSTALL ENGINE UNDER COVER

IG08X−05

REMOVAL

1. REMOVE ENGINE UNDER COVER

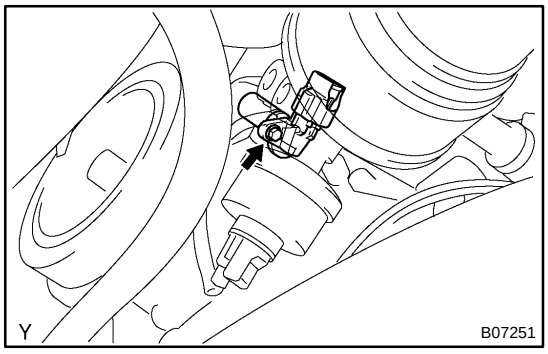

2. REMOVE CRANKSHAFT POSITION SENSOR

(a) Disconnect the crankshaft position sensor connector.

(b) Remove the bolt and crankshaft position sensor.

IGNITION COIL

COMPONENTS

IG08Q−06

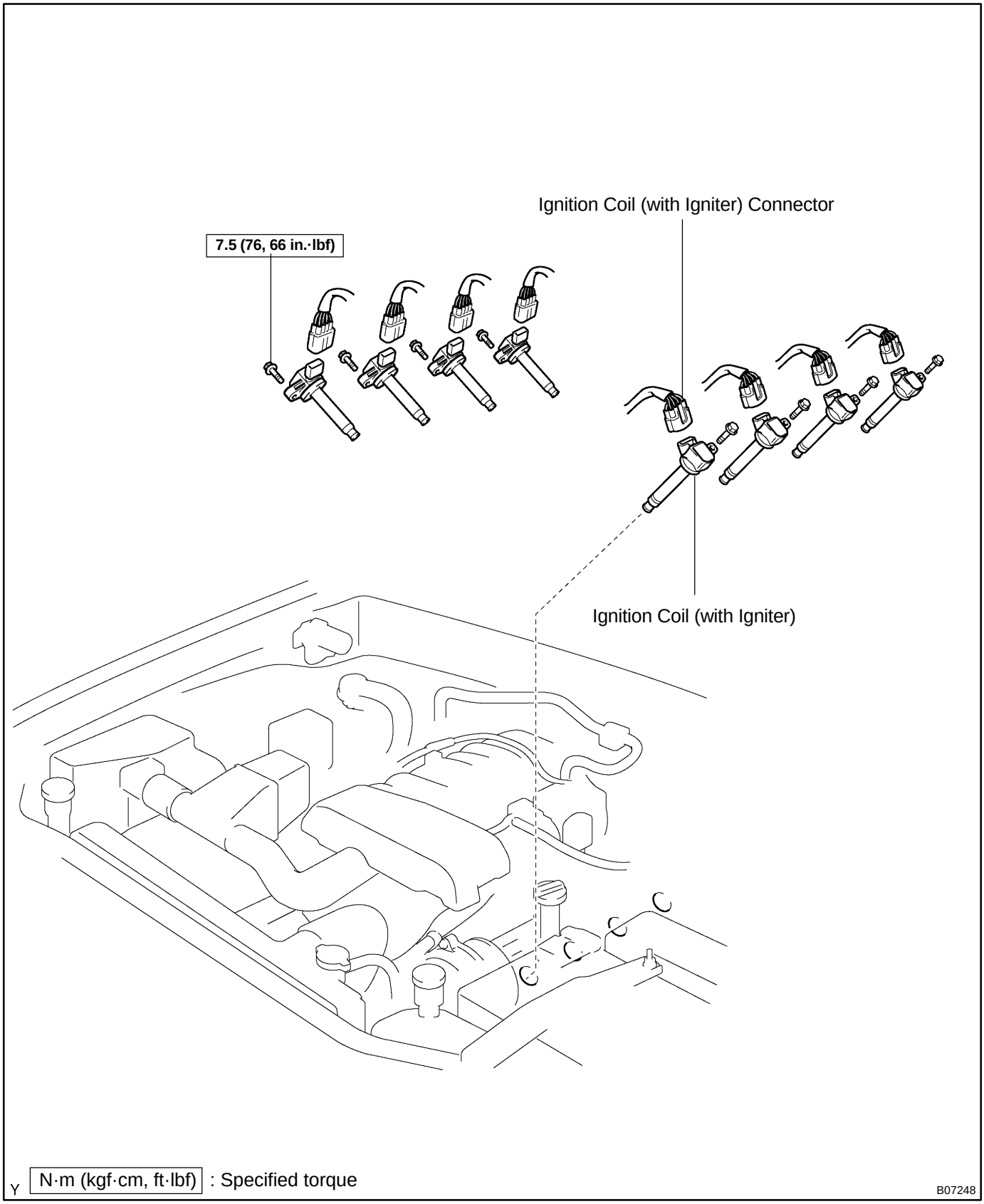

IG0EN−04

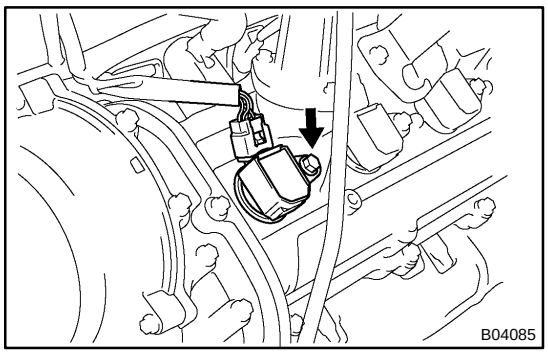

INSTALLATION

1. INSTALL IGNITION COILS (WITH IGNITER)

Install the ignition coil (with igniter) with the bolt. Install the 8 ignition coils (with igniter).

Torque: 7.5 N·m (76 kgf·cm, 66 in.·lbf)

2. CONNECT IGNITION COIL (WITH IGNITER) CONNECTORS

IG08R−05

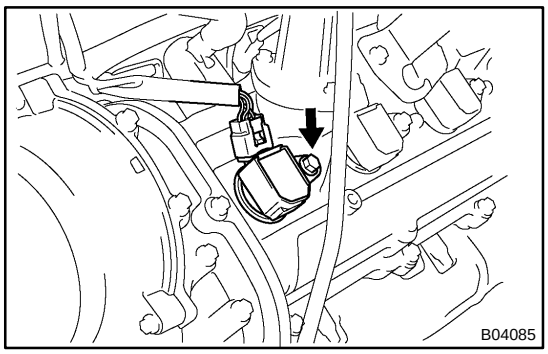

REMOVAL

1. DISCONNECT IGNITION COIL (WITH IGNITER) CONNECTORS

2. REMOVE IGNITION COILS (WITH IGNITER)

Remove the bolt, and pull out the ignition coil (with igniter). Remove the 8 ignition coils (with igniter).

IGNITION SYSTEM

IG0MF−02

ON−VEHICLE INSPECTION

NOTICE:

”Cold” and ”Hot” in these sentences express the temperature of the coils themselves. ”Cold” is from −10˚C (14˚F) to 50˚C (122˚F) and ”Hot” is from 50˚C (122˚F) to 100˚C (212˚F).

1. INSPECT IGNITION COIL (WITH IGNITER) AND SPARK TEST

Check that the spark occurs.

(1) Remove the ignition coils (with igniter).
(see page IG−5)
(2) Remove the spark plugs.
(3) Install the spark plugs to each ignition coil (with igniter), and connect the ignition coil (with igniter) connector.
(4) Disconnect the 8 injector connectors.
(5) Ground the spark plug.
(6) Check that spark occurs while engine is being cranked.

NOTICE:

To prevent gasoline from being injected out of injectors during this test, crank the engine for no more than 5 to 10 seconds at a time.

If the spark does not occur, do the test as follows:

SPARK TEST
↓ NG
CHECK TDC
↓ NG
CHECK CONNECTION OF IGNITION COIL CONNECTOR → BAD → Connect securely.
↓ OK
CHANGE IT TO NORMAL IGNITION COIL (WITH IGNITER) AND PERFORM SPARK TEST AGAIN → OK → Replace the ignition coil (with igniter).
↓ NO
CHECK POWER SUPPLY TO IGNITION COIL (WITH IGNITER)
1. Turn ignition switch to ON.
2. Check that there is battery voltage at ignition coil positive (+) terminal.

→ BAD → Check wiring between ignition switch to ignition coil (with igniter).
↓ OK
CHECK RESISTANCE OF CRANKSHAFT POSITION SENSOR (See page IG−12)

	Cold	Hot
Resistance:	**985 − 1,600 Ω**	**1,265 − 1,890 Ω**

→ BAD → Replace the crankshaft position sensor.
↓ OK
CHECK IGT SIGNAL FROM ECM (See page DI−642) → BAD → Check ECM (See page IN−30)
↓ OK
REPAIR WIRING BETWEEN IGNITION COIL AND ECM

(7) Using a 16 mm plug wrench, install the spark plugs.
Torque: 17.5 N·m (180 kgf·cm, 13 ft·lbf)
(8) Reinstall the ignition coils (with igniter). (see page IG−6)

2. INSPECT SPARK PLUGS

(a) Remove the ignition coils (with igniter). (see page IG−5)

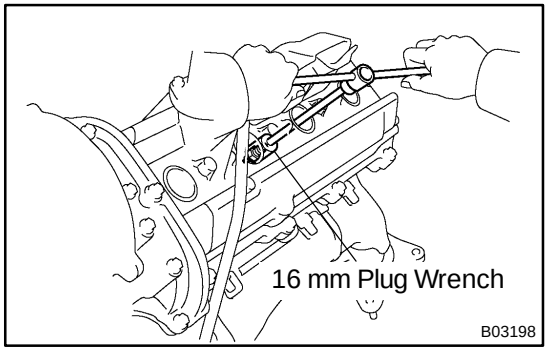

(b) Using a 16 mm plug wrench, remove the spark plugs.

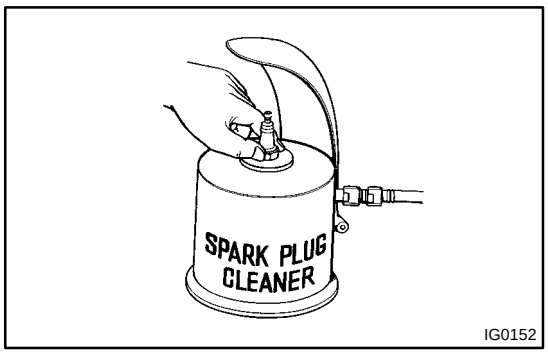

(c) Clean the spark plugs.

If the electrode has traces of wet carbon, allow it to dry and then clean with a spark plug cleaner.

Air pressure: Below 588 kPa (6 kgf/cm^2, 85 psi)

Duration: 20 seconds or less

HINT:

If there are traces of oil, remove it with gasoline before using the spark plug cleaner.

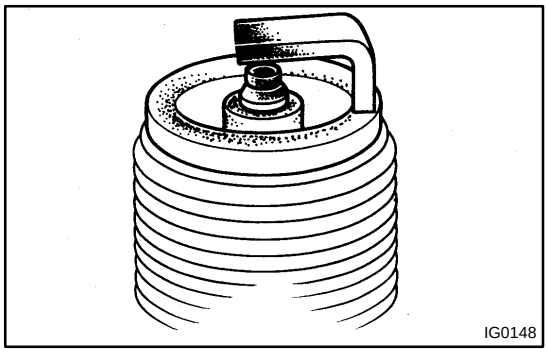

(d) Check the spark plug for thread damage and insulator damage.

If abnormal, replace the spark plug.

Recommended spark plug:

DENSO made	SK20R11
NGK made	IFR6A11

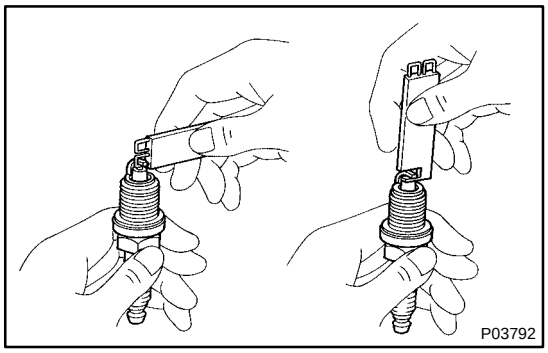

(e) Adjust the spark plug electrode gap.

Electrode gap: 1.0 to 1.1 mm (0.039 to 0.043 in.)

(f) Using a 16 mm plug wrench, install the spark plugs.

Torque: 17.5 N·m (180 kgf·cm, 13 ft·lbf)

(g) Reinstall the ignition coils (with igniter).

(see page IG−6)

FOR ALL OF VEHICLES

IN0KM−01

PRECAUTION

1. FOR VEHICLES EQUIPPED WITH SRS AIRBAG AND SEAT BELT PRETENSIONER

(a) The TOYOTA TUNDRA is equipped with an SRS (Supplemental Restraint System), such as the driver airbag, front passenger airbag assembly and seat belt pretensioner.

Failure to carry out service operations in the correct sequence could cause the supplemental restraint system to unexpectedly deploy during servicing, possibly leading to a serious accident.

Further, if a mistake is made in servicing the supplemental restraint system, it is possible the SRS may fail to operate when required. Before servicing (including removal or installation of parts, inspection or replacement), be sure to read the following items carefully, then follow the correct procedure described in this manual.

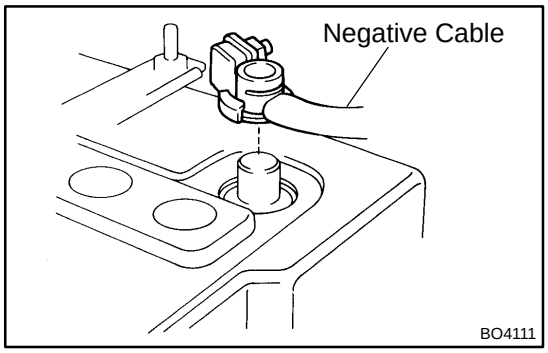

(b) GENERAL NOTICE

(1) Malfunction symptoms of the supplemental restraint system are difficult to confirm, so the diagnostic trouble codes become the most important source of information when troubleshooting. When troubleshooting the SRS, always check the diagnostic trouble codes before disconnecting the battery (see page DI−1810).

(2) Work must be started after 90 seconds from the time the ignition switch is turned to the LOCK position and the negative (−) terminal cable is disconnected from the battery.

(The supplemental restraint system is equipped with a back−up power source because if work is started within 90 seconds of disconnecting the negative (−) terminal cable from the battery, the SRS may deploy.)

When the negative (−) terminal cable is disconnected from the battery, memory of the clock and audio systems will be cancelled. So before starting work, make a record of the contents memorized in each memory system. When work is finished, reset the clock and audio systems as before.

To avoid erasing the memory of each memory system, never use a back−up power supply from another battery.

(3) Even in case of a minor collision where the SRS does not deploy, the steering wheel pad (see page RS−24), front passenger airbag assembly (see page RS−38), side airbag assembly (see page RS−77, RS−52 or RS−67) curtain shield airbag assembly (see page RS−85) and seat belt pretensioner (see page BO−241) should be inspected.
(4) Never use SRS parts from another vehicle. When replacing parts, replace them with new ones.
(5) Before repairs, remove the airbag sensor if shocks are likely to be applied to the sensor during repairs.
(6) Never disassemble or repair the airbag sensor assembly, steering wheel pad, front passenger airbag assembly or seat belt pretensioner.
(7) If the airbag sensor assembly, steering wheel pad, front passenger airbag assembly or seat belt pretensioner has been dropped, or if there are cracks, dents or other defects in the case, bracket or connector, replace them with new ones.
(8) Do not directly expose the airbag sensor assembly, steering wheel pad, front passenger airbag assembly or seat belt pretensioner to hot air or flames.
(9) Use a voltmeter/ohmmeter with high impedance (10 kΩ/V minimum) for troubleshooting of the electrical circuit.
(10) Information labels are attached to the periphery of the SRS components. Follow the instructions on the labels.
(11) After work on the supplemental restraint system is completed, check the SRS warning light (see page DI−1855).

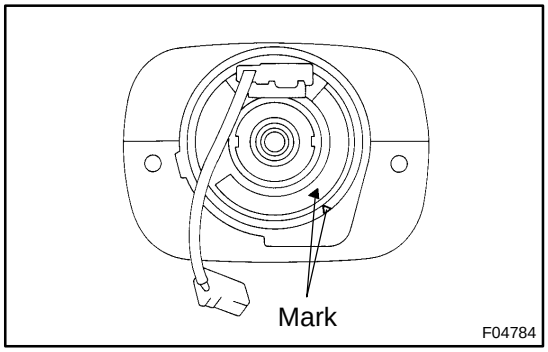

(c) SPIRAL CABLE (in Combination Switch)
The steering wheel must be fitted correctly to the steering column with the spiral cable at the neutral position, otherwise cable disconnection and other troubles may result. Refer to SR−28 or SR−42 concerning correct steering wheel installation.

(d) STEERING WHEEL PAD (with Airbag)

(1) When removing the steering wheel pad or handling a new steering wheel pad, it should be placed with the pad top surface facing up.
Storing the pad with its metallic surface upward may lead to a serious accident if the airbag inflates for some reason. In addition, do not store a steering wheel pad on top of another one.

(2) Never measure the resistance of the airbag squib. This may cause the airbag to deploy, which could cause serious injury.

(3) Grease or detergents of any kind should not be applied to the steering wheel pad.

(4) Store the steering wheel pad where the ambient temperature remains below 93˚C (200˚F), with low humidity and away from electrical noise.

(5) Before using an electric welder, first disconnect the airbag connector (the connector is yellow and has 4 pins) under the steering column near the combination switch connector.

(6) As a safety measure, always deploy airbags using an SST before disposal (see page RS−25).
Deploy airbags in a safe place away from electrical noise.

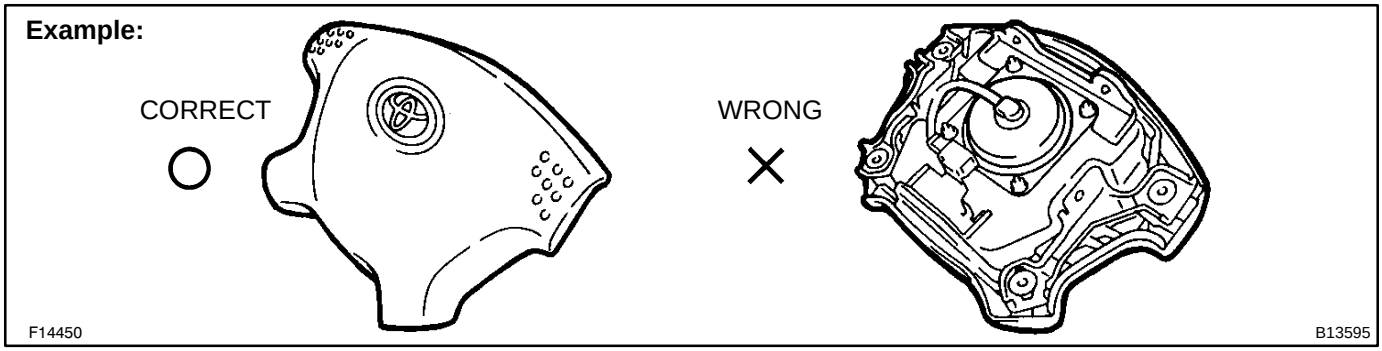

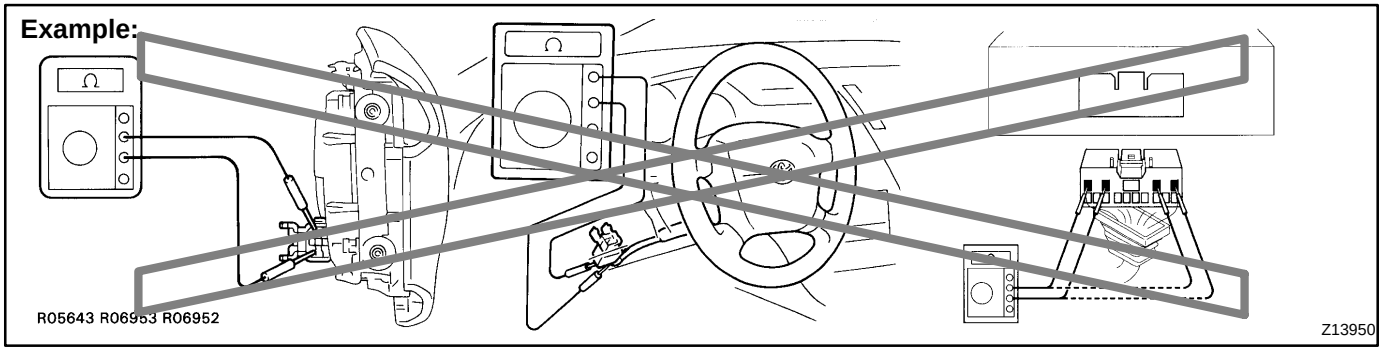

(e) FRONT PASSENGER AIRBAG ASSEMBLY

(1) Always store a removed or new front passenger airbag assembly with the airbag deployment side facing up.
Storing the airbag assembly with the airbag deployment side facing down could cause a serious accident if the airbag inflates.

(2) Never measure the resistance of the airbag squib. This may cause the airbag to deploy, which could cause serious injury.

(3) Grease or detergents of any kind should not be applied to the steering wheel pad.

(4) Store the steering wheel pad where the ambient temperature remains below 93˚C (200˚F), with low humidity and away from electrical noise.

(5) Before using an electric welder, first disconnect the airbag connector (the connector is yellow and has 4 pins) under the steering column near the combination switch connector.

(6) As a safety measure, always deploy airbags using an SST before disposal (see page RS−39).
Deploy airbags in a safe place away from electrical noise.

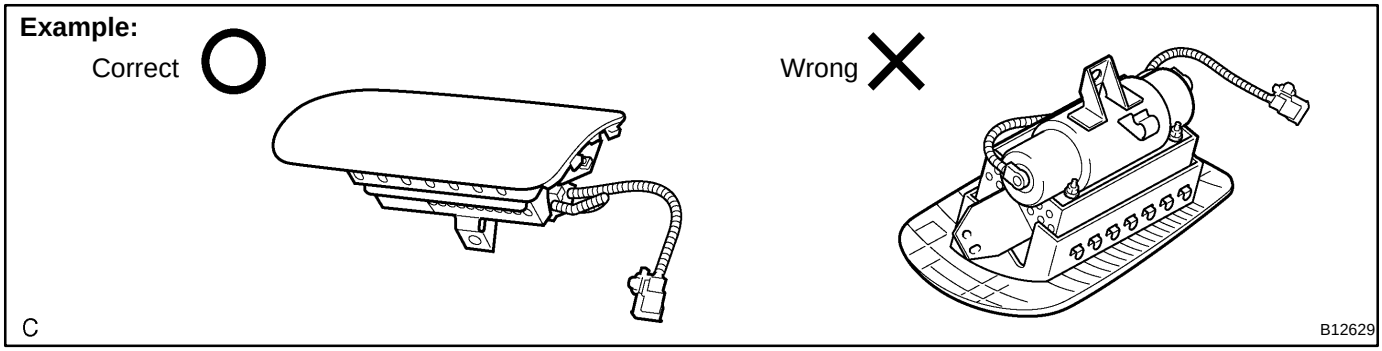

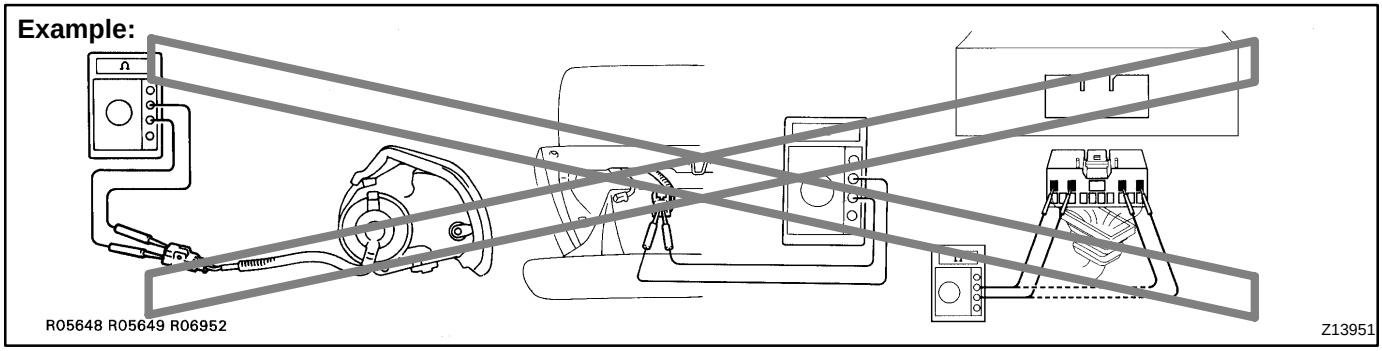

(f) SEAT BELT PRETENSIONER

(1) Never measure the resistance of the seat belt pretensioner. This may cause the seat belt pretensioner to activate, which could cause serious injury.

(2) Never disassemble the seat belt pretensioner.

(3) Never install the seat belt pretensioner in another vehicle.

(4) Store the seat belt pretensioner where the ambient temperature remains below 80°C (176°F), with low humidity and away from electrical noise.

(5) Before using an electric welder, first disconnect the connector (the connector is yellow and has 2 pins).

(6) As a safety measure, always activate the seat belt pretensioner before disposal (see page BO−245). Activate the pretensioner in a safe place away from electrical noise.

(7) The seat belt pretensioner becomes hot after activation. Allow it to cool before disposing. Never use water to cool the seat belt pretensioner.

Example:

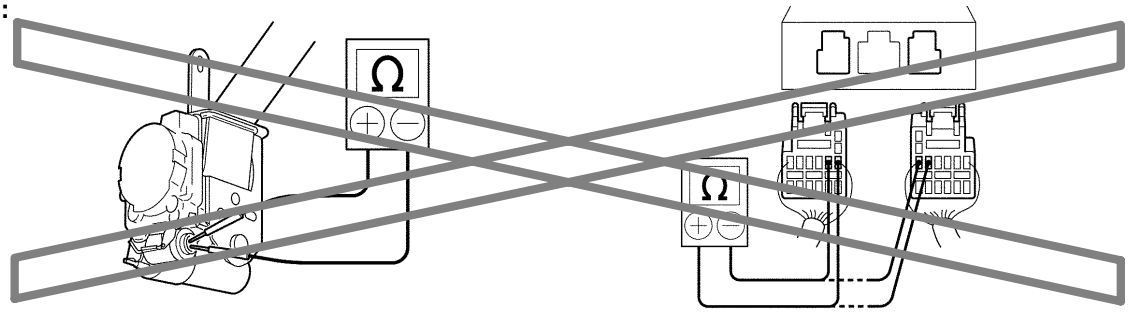

B02121

(g) SIDE AIRBAG ASSEMBLY

(1) Always store a removed or new side airbag assembly with the airbag deployment side facing up.
Storing the airbag assembly with the airbag deployment side facing down could cause a serious accident if the airbag inflates.

(2) Never measure the resistance of the airbag squib (This may cause the airbag to deploy, which is very dangerous.).

(3) Grease should not be attached to the side airbag assembly and the surface should not be cleaned with any kind of detergents.

(4) Store the airbag assembly where the ambient temperature remains below 93˚C (200˚F), without high humidity and away from electrical noise.

(5) When using electric welding, first disconnect the airbag connector (yellow color and 2 pins) under the seat before starting work.

(6) When disposing of a vehicle or the side airbag assembly alone, the airbag should be deployed using an SST before disposal (See page RS−78, RS−53 or RS−68).
Perform the operation in a safe place away from electrical noise.

Example:

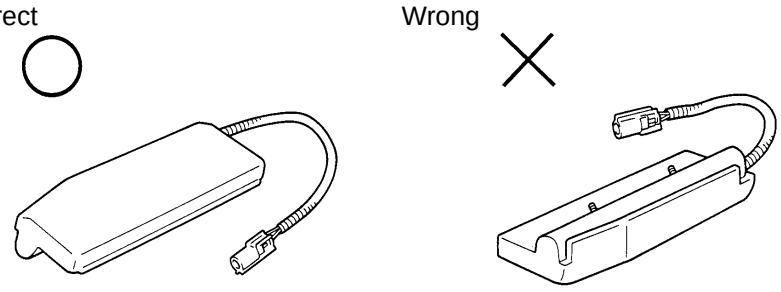

B02129

Example:

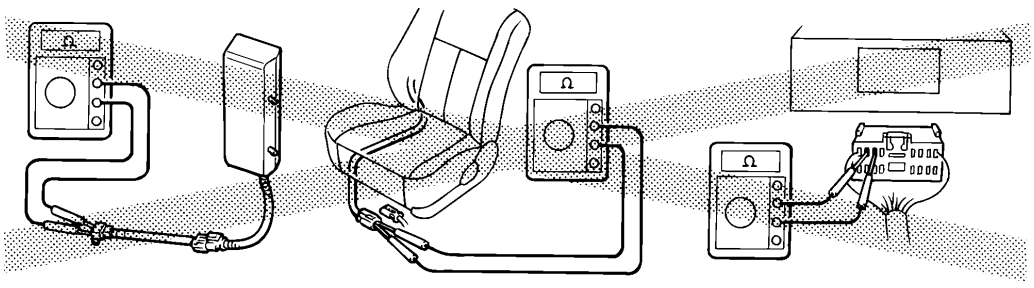

B01546

(h) CURTAIN SHIELD AIRBAG ASSEMBLY

(1) Always store a removed or new curtain shield airbag assembly in a clear plastic bag, and keep it in a safe place.

NOTICE:

Protection bag is not reused.

CAUTION:

Never disassemble the curtain shield airbag assembly

(2) Never measure the resistance of the airbag squib (This may cause the airbag to deploy, which is very dangerous.).

(3) Grease should not be attached to the curtain shield airbag assembly and the surface should not be cleaned with any kind of detergents.

(4) Store the airbag assembly where the ambient temperature remains below 93°C (200°F), without high humidity and away from electrical noise.

(5) When using electric welding, first disconnect the airbag connector (yellow color and 2 pins) into the instrument panel before starting work.

(6) When disposing of a vehicle or the curtain shield airbag assembly alone, the airbag should be deployed using an SST before disposal (See page RS−86). Perform the operation in a safe place away from electrical noise.

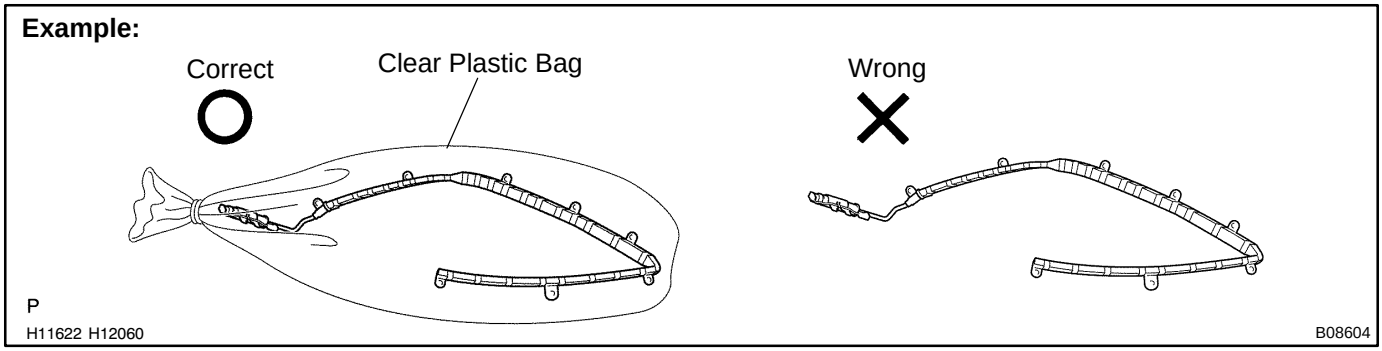

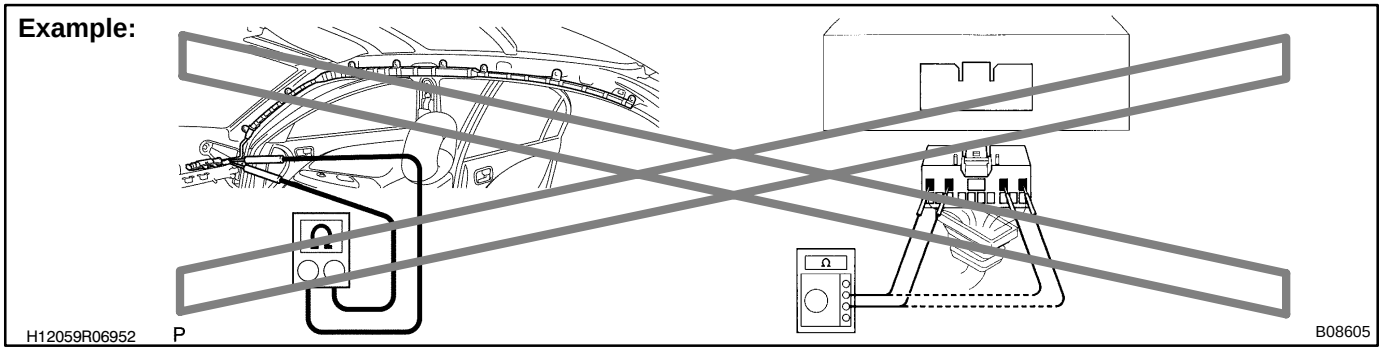

(i) AIRBAG SENSOR ASSEMBLY

(1) If an airbag sensor assembly has been involved in a collision where its SRS has deployed, do not re-use it.

(2) The connectors to the airbag sensor assembly should be connected or disconnected with the sensor mounted on the floor. Failure to do so could cause undesired deployment of the SRS.

(3) To avoid serious injury, servicing the SRS must be started 90 seconds after:

- The ignition switch is turned to the LOCK position.
- The negative (−) terminal cable is disconnected from the battery.

Even if only loosening the set bolts of the airbag sensor assembly, you must follow the above guidelines.

(j) WIRE HARNESS AND CONNECTOR

The SRS wire harness is integrated with the instrument panel wire harness assembly. All the connectors in the system are a standard yellow color. If the SRS wire harness becomes disconnected or the connector becomes broken, etc., repair or replace it as shown on page RS−139.

2. FOR VEHICLES EQUIPPED WITH A CATALYTIC CONVERTER

CAUTION:

If large amounts of unburned gasoline flow into the converter, it may overheat and create a fire hazard. To prevent this, observe the following precautions and explain them to your customer.

(a) Use only unleaded gasoline.

(b) Avoid prolonged idling.
Avoid idling the engine for more than 20 minutes.

(c) Avoid spark jump test.
(1) Perform spark jump tests only when absolutely necessary. Perform this test as rapidly as possible.
(2) While testing, never race the engine.

(d) Avoid prolonged engine compression measurement.
Engine compression tests must be done as rapidly as possible.

(e) Do not run engine when the fuel tank is nearly empty.
This may cause the engine to misfire and create an extra load on the converter.

(f) Avoid coasting with ignition turned off.

(g) Do not dispose of used catalyst with gasoline or oil contaminated parts.

3. IF VEHICLE IS EQUIPPED WITH MOBILE COMMUNICATION SYSTEM

For vehicles with mobile communication systems such as two−way radios and cellular telephones, observe the following precautions.

(1) Install the antenna as far away as possible from the ECU and sensors of the vehicle's electronic system.
(2) Install the antenna feeder at least 20 cm (7.87 in.) away from the ECU and sensors of the vehicle's electronic systems. For details about ECU and sensor locations, refer to the applicable component's section.
(3) Avoid winding the antenna feeder together with other wiring as much as possible, and also avoid running the antenna feeder parallel with other wire harnesses.
(4) Check that the antenna and feeder are correctly adjusted.
(5) Do not install powerful mobile communications system.

4. FOR USING OBD II SCAN TOOL OR HAND−HELD TESTER

CAUTION:

Observe the following items for safety reasons:

- **Before using the hand−held tester or OBD II scan tool, the hand−held tester's operator manual or OBD II scan tool's instruction book should be read thoroughly.**
- **Be sure to route all cables securely when driving with the hand−held tester or OBD II scan tool connected to the vehicle. (I.e. keep cables away from feet, pedals, steering wheel and shift lever.)**
- **Two persons are required when test−driving with the hand−held tester or OBD II scan tool: one person to drive the vehicle and another to operate the hand−held tester or OBD II scan tool.**

HOW TO TROUBLESHOOT ECU CONTROLLED SYSTEMS

IN01T−19

GENERAL INFORMATION

A large number of ECU controlled systems are used in the TOYOTA TUNDRA. In general, ECU controlled systems are considered to be a very intricate, requiring a high level of technical knowledge to troubleshoot. However, following the problem checking procedures of the ECU controlled system's circuits carefully is not complex. If you have an adequate understanding of the system and a basic knowledge of electricity, accurate diagnosis and necessary repair can be performed.

This manual emphasizes the above standpoint to help service technicians perform accurate and effective troubleshooting. Detailed information on major ECU controlled systems in this vehicle are outlined below:

System	Page
1. Engine 1GR−FE	DI−1
2. Engine 2UZ−FE	DI−420
3. Automatic Transmission A750E for 1GR−FE	DI−943
4. Automatic Transmission A750E/A750F for 2UZ−FE	DI−1108
5. Tire Pressure Warning System	DI−1280
6. Anti−Lock Brake System	DI−1383
7. ABS with EBD & BA & TRAC & VSC System	DI−1456
8. Can Communication System	DI−1693
9. Supplemental Restraint System	DI−1810
10. TOYOTA Vehicle Intrusion Protection System	DI−2297
11. Cruise Control System	DI−2341
12. Sliding Roof System	DI−2376
13. Body Control System	DI−2391
14. Driver Door Control System	DI−2453
15. Passenger Door Control System	DI−2475
16. Multiplex Communication System	DI−2495
17. Audio System	DI−2519
18. Rear Seat Audio System	DI−2633
19. Rear Seat Entertainment System	DI−2669
20. Navigation System	DI−2753

FOR USING OBD II SCAN TOOL OR HAND−HELD TESTER

- Before using the tester, read its user manual thoroughly.
- Connect the cable of the tester to DLC3, turn the ignition switch ON and operate the tester. If the tester cannot communicate with the ECU controlled system, there is a problem on the vehicle side or tester side.
  (1) If communication is normal when the tester is connected to another vehicle, inspect the diagnosis data link line (Bus⊕line) or ECU power circuit of the vehicle.
  (2) If communication is still not possible when the tester is connected to another vehicle, the problem lies in the tester. Perform the Self Test procedures outlined in the Tester Operator's Manual.

IN01U–15

HOW TO PROCEED WITH TROUBLESHOOTING

Carry out troubleshooting in accordance with the procedure below. Only a basic procedure is shown. Details in the Diagnostics section show the most effective methods for each circuit. Confirm troubleshooting procedures first for the relevant circuit before beginning troubleshooting of that circuit.

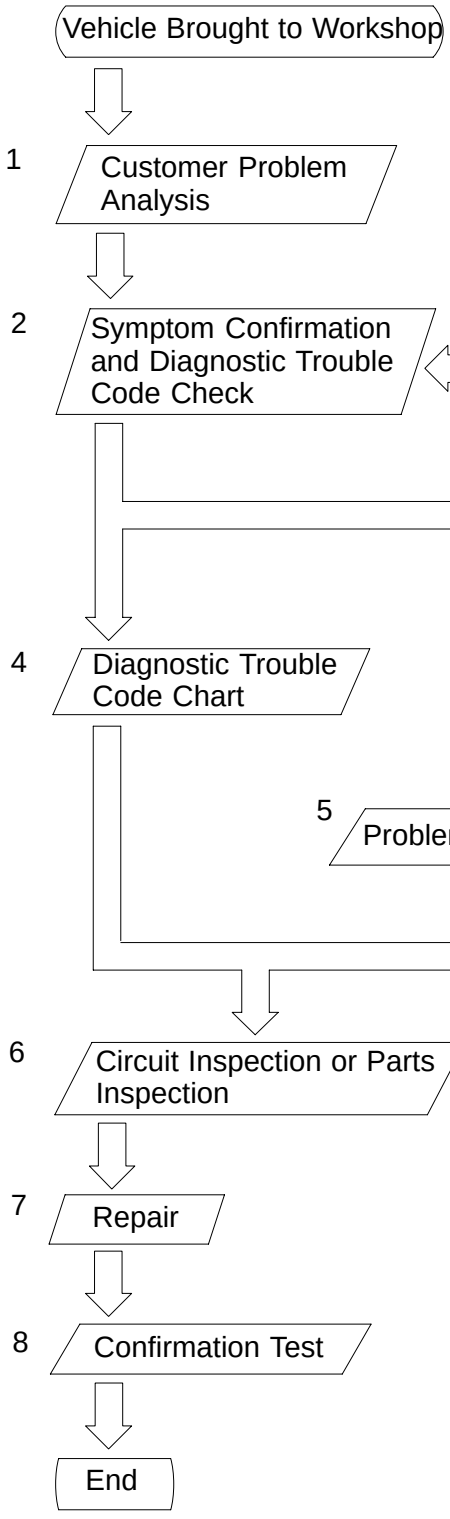

1

Ask the customer about the conditions and the environment in which the problem occurred.

2, 3

Confirm the symptoms and the problem conditions, and check the diagnostic trouble codes.
(When the problem symptoms do not appear during confirmation, use the symptom simulation method described later.)

4, 5, 6

Check the results obtained in Step 2. Confirm the inspection procedure for the system or the part that should be checked using the diagnostic trouble code chart or the problem symptoms table.

7

Check and repair the affected system or part in accordance with the instructions in Step 6.

8

After completing repairs, confirm that the problem has been eliminated.
(To be absolutely sure the problem no longer exists, perform the confirmation test under the same conditions and environment as when it occurred the first time.)

1. CUSTOMER PROBLEM ANALYSIS

- The 5 items in the table below are important points in the problem analysis.
- In troubleshooting, the problem symptoms must be confirmed accurately. Preconceptions should be discarded in order to give an accurate judgement. To ascertain what the problem symptoms are, it is extremely important to ask the customer about the problem and the conditions at the time it occurred.

Important Points in the Customer Problem Analysis

- What −−−−− Vehicle model, system name
- When −−−−− Date, time, occurrence frequency
- Where −−−−− Road conditions
- Under what conditions? −−−−− Running conditions, driving conditions, weather conditions
- How did it happen? −−−−− Problem symptoms

(Sample) Supplemental restraint system check sheet.

CUSTOMER PROBLEM ANALYSIS CHECK

SUPPLEMENTAL RESTRAINT SYSTEM Check Sheet

Inspector's Name _____

Customer's Name		**VIN**	
		Production Date	/ /
		Licence Plate No.	
Date Vehicle Brought In	/ /	**Odometer Reading**	km miles

Date Problem First Occurred	/ /
Weather	☐ Fine ☐ Cloudy ☐ Rainy ☐ Snowy ☐ Other
Temperature	Approx.

Vehicle Operation	☐ Starting ☐ Idling ☐ Driving [☐ Constant speed ☐ Acceleration ☐ Deceleration ☐ Other]

2. SYMPTOM CONFIRMATION AND DIAGNOSTIC TROUBLE CODE CHECK

The diagnostic system in the TOYOTA TUNDRA fulfills various functions.

- The first function is the Diagnostic Trouble Code (DTC) Check. In a DTC Check, a previous malfunction's DTC can be checked by a technician during troubleshooting. (A DTC is a code stored in the ECU memory whenever a malfunction in the signal circuits to the ECU occurs.)
- Another function is the Input Signal Check, which checks if the signals from various switches are sent to the ECU correctly. By using these check functions, the problem areas can be narrowed down and troubleshooting is more effective. Diagnostic functions are incorporated in the following systems in the TOYOTA TUNDRA.

System	Diagnostic Trouble Code Check	Input Signal Check (Sensor Check)	Diagnostic Test Mode (Active Test)
1. Engine 1GR−FE	○ (with Check Mode)	○	○
2. Engine 2UZ−FE	○ (with Check Mode)	○	○
3. Automatic Transmission A750E for 1GR−FE	○ (with Check Mode)	○	○
4. Automatic Transmission A750E/A750F for 2UZ−FE	○ (with Check Mode)	○	○
5. Tire Pressure Warning System	○	○	○
6. Anti−Lock Brake System	○	○	○
7. ABS with EBD & BA & TRAC & VSC System	○	○	○
8. Can Communication System	○		
9. Supplemental Restraint System	○ (with Check Mode)	○	
10.Cruise Control System	○	○	
11.Sliding Roof System		○	○
12.Body Control System		○	○
13.Driver Door Control System		○	○
14.Passenger Door Control System		○	○
15.Multiplex Communication System	○		

In the DTC Check, it is very important to determine whether the problem indicated by the DTC is: 1) still occurring, or 2) occurred in the past but has since returned to normal. In addition, the DTC should be compared to the problem symptom to see if they are related. For this reason, DTCs should be checked before and after confirmation of symptoms (i.e., whether or not problem symptoms exist) to determine current conditions, as shown in the table below.

Never skip the DTC Check. Failure to check DTCs may, depending on the case, result in unnecessary troubleshooting for systems operating normally or lead to repairs not pertinent to the problem. Follow the procedures listed above in the correct order.

DIAGNOSTIC TROUBLE CODE CHECK PROCEDURE

Diagnostic Trouble Code Check (Make a note of and then clear)	Confirmation of Symptoms	Diagnostic Trouble Code Check	Problem Condition
Diagnostic Trouble Code Display	Problem symptoms exist	Same diagnostic trouble code is displayed	Problem is still occurring in the diagnostic circuit
		Normal code is displayed	The problem is still occurring in a place other than in the diagnostic circuit (The diagnostic trouble code displayed first is either for a past problem or it is a secondary problem)
	No problem symptoms exist		The problem occurred in the diagnostic circuit in the past
Normal Code Display	Problem symptoms exist	Normal code is displayed	The problem is still occurring in a place other than the diagnostic circuit
	No problem symptoms exist	Normal code is displayed	The problem occurred in a place other than the diagnostic circuit in the past

Taking into account the points on the previous page, a flow chart showing how to proceed with troubleshooting using the diagnostic trouble code check is shown below. Directions from the flow chart will indicate how to proceed to DTC troubleshooting or to the troubleshooting of problem symptoms table.

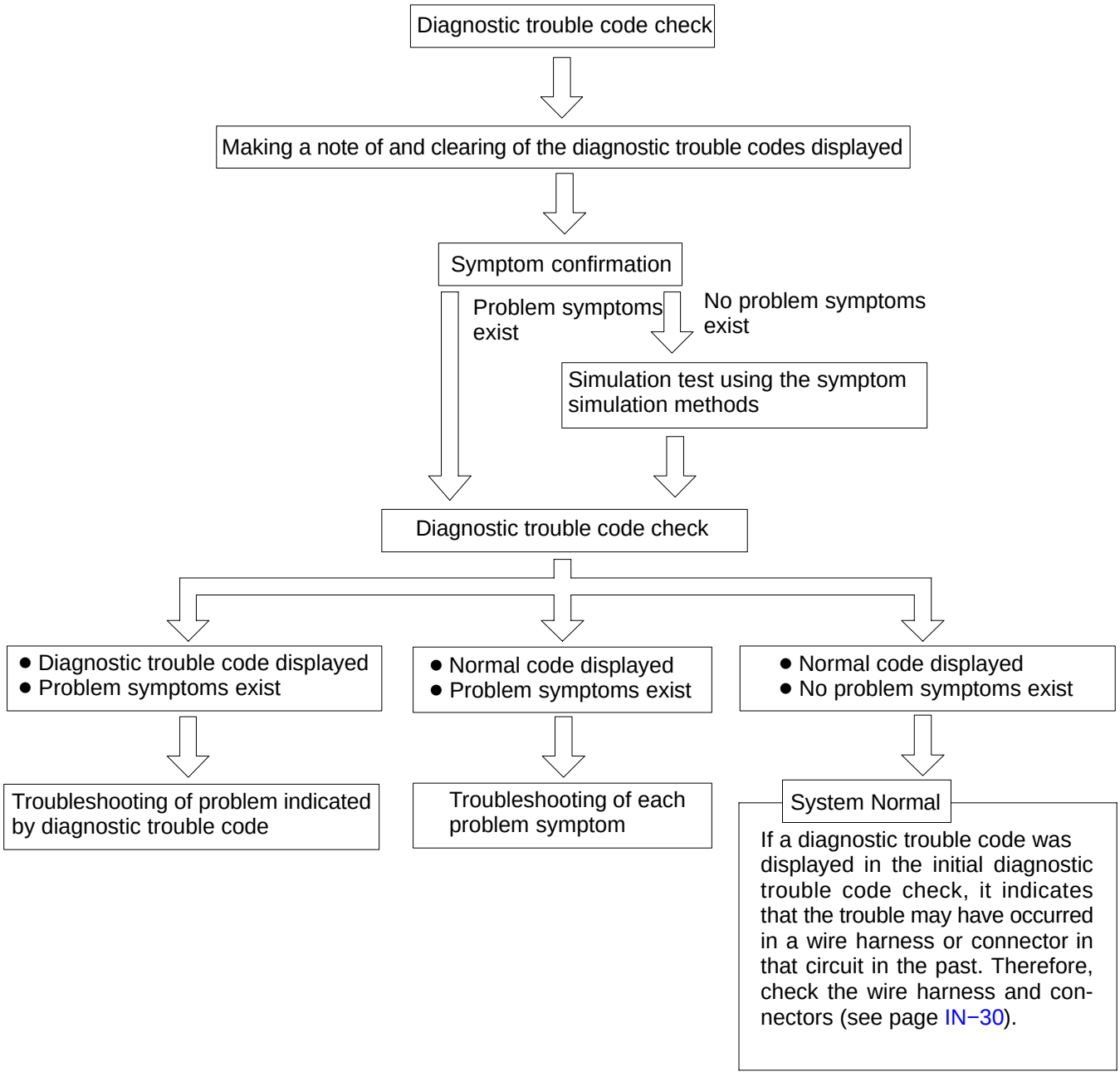

3. SYMPTOM SIMULATION

The most difficult case in troubleshooting is when no problem symptoms occurring. In such cases, a thorough customer problem analysis must be carried out. Then simulate a simulation of the same or similar conditions and environment in which the problem occurred in the customer's vehicle should be carried out. No matter how much skill or experience a technician has, troubleshooting without confirming the problem symptoms will lead to something important in the repair operation being overlooked and lead to mistakes or delays in repairs.

For example:

With a problem that only occurs when the engine is cold, or occurs as a result of vibration caused by road during driving, the problem can never be determined as long as the symptoms are being checked on stationary vehicle or a vehicle with a warmed−up engine.

Vibration, heat or water penetration (moisture) is difficult to reproduce. The symptom simulation tests below are effected substitutes for the conditions and can be applied on a stationary vehicle.

Important Points in the Symptom Simulation Test:

In the symptom simulation test, the problem symptoms as well as problem area or parts must be confirmed. First, narrow down the possible problem circuits according to the symptoms. Then, connect the tester and carry out the symptom simulation test, judging whether the circuit being tested is defective or normal, and also confirming the problem symptoms at the same time. Refer to the problem symptoms table for each system to narrow down the possible causes of the symptom.

<table>
<tr><td>1</td><td colspan="2">VIBRATION METHOD: When vibration seems to be the major cause.</td></tr>
<tr><td colspan="2">CONNECTORS
Slightly shake the connector vertically and horizontally.

WIRE HARNESS
Slightly shake the wire harness vertically and horizontally.
The connector joint, fulcrum of the vibration, and body through portion are the major areas that should be checked thoroughly.</td><td>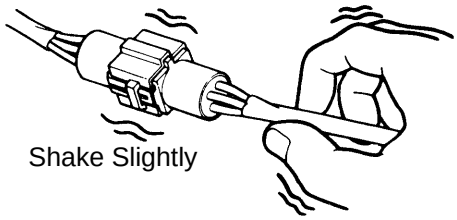
Shake Slightly
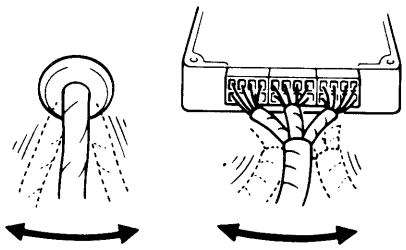
Swing Slightly
FI2331
FI2332</td></tr>
<tr><td colspan="2">PARTS AND SENSOR
Apply slight vibration with a finger to the part of the sensor considered to be the cause of the problem and check whether or not the malfunction occurs.
HINT:
Applying strong vibration to relays may result in open relays.</td><td>Vibrate Slightly
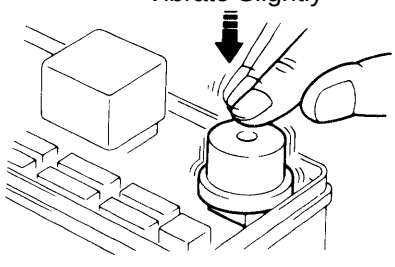
FI2330</td></tr>
</table>

V07268

2	**HEAT METHOD: When the problem seems to occur when the suspect area is heated.**

Heat the component that is the likely cause of the malfunction with a hair dryer or similar device. Check whether or not if the malfunction occurs.

NOTICE:

(1) Do not heat to more than 60˚C (140˚F). (Exceeding this temperature may damage components.)

(2) Do not apply heat directly to parts in the ECU.

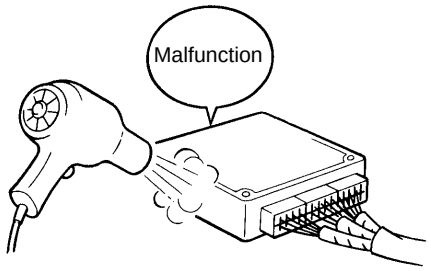

FI2334

3	**WATER SPRINKLING METHOD: When the malfunction seems to occur on a rainy day or in a high−humidity condition.**

Sprinkle water onto the vehicle and check whether or not if the malfunction occurs.

NOTICE:

(1) Never sprinkle water directly into the engine compartment. Indirectly change the temperature and humidity by applying water spray onto the front of the radiator.

(2) Never apply water directly onto electronic components.

HINT:

If a vehicle is subject to water leakage, the leaked water may damage the ECU. When testing a vehicle with a water leakage problem, special caution must be taken.



FI6649

4	**OTHER: When a malfunction seems to occur when electrical load is excessive.**

Turn on all electrical loads including the heater blower, head lights, rear window defogger, etc. and check to see if the malfunction occurs.

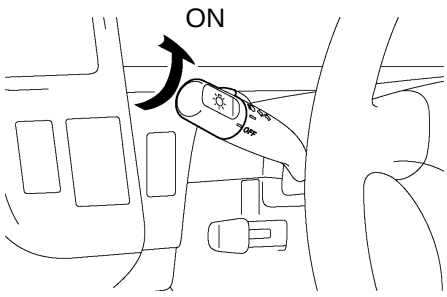

B02389

B02390

4. DIAGNOSTIC TROUBLE CODE CHART

Use Diagnostic Trouble Codes (DTCs) (from the DTC checks) in the table below to determine the trouble area and proper inspection procedure. Engine diagnostic trouble code chart is shown below as an example.

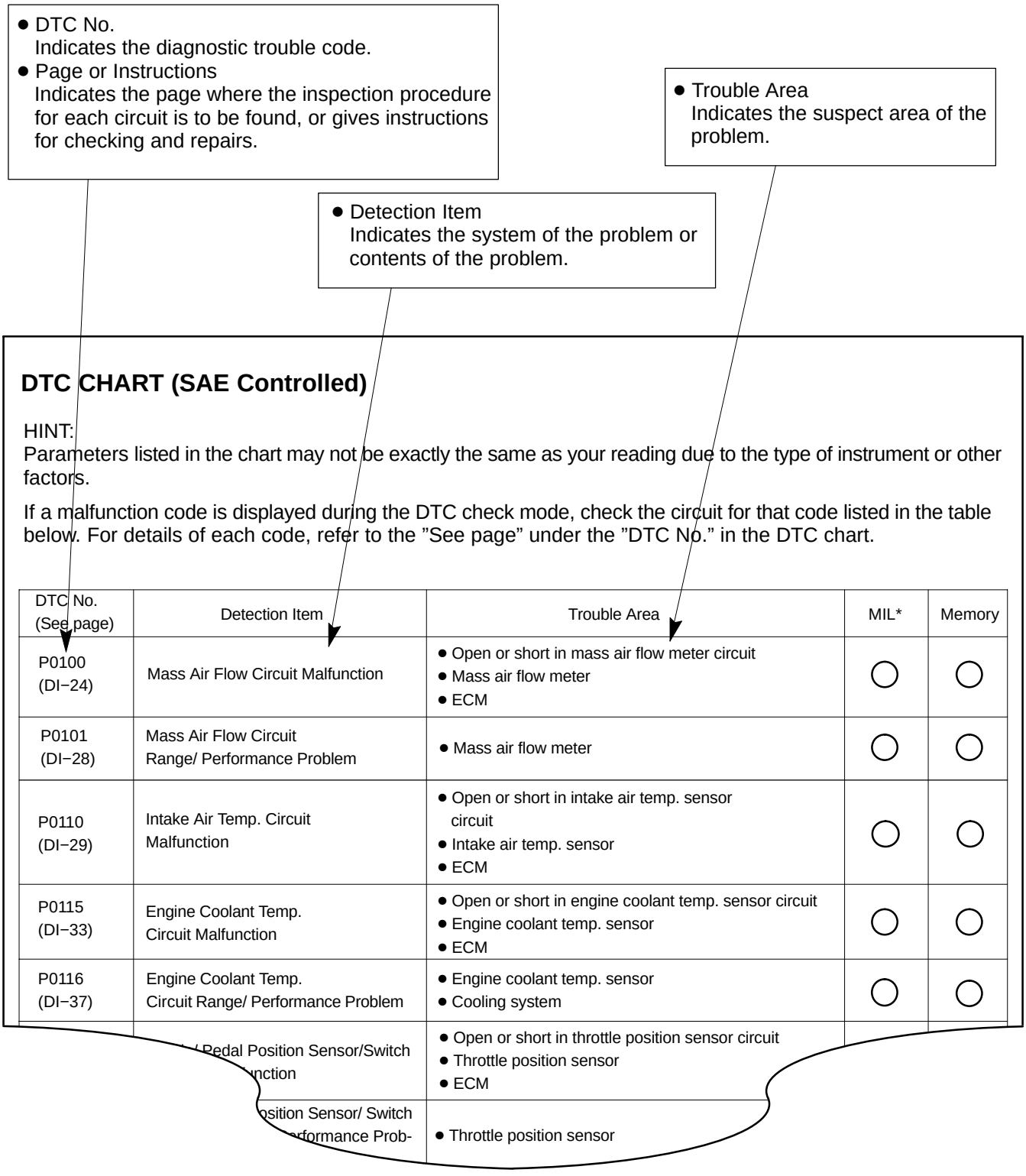

DTC CHART (SAE Controlled)

HINT:
Parameters listed in the chart may not be exactly the same as your reading due to the type of instrument or other factors.

If a malfunction code is displayed during the DTC check mode, check the circuit for that code listed in the table below. For details of each code, refer to the ”See page” under the ”DTC No.” in the DTC chart.

DTC No. (See page)	Detection Item	Trouble Area	MIL*	Memory
P0100 (DI−24)	Mass Air Flow Circuit Malfunction	● Open or short in mass air flow meter circuit ● Mass air flow meter ● ECM	○	○
P0101 (DI−28)	Mass Air Flow Circuit Range/ Performance Problem	● Mass air flow meter	○	○
P0110 (DI−29)	Intake Air Temp. Circuit Malfunction	● Open or short in intake air temp. sensor circuit ● Intake air temp. sensor ● ECM	○	○
P0115 (DI−33)	Engine Coolant Temp. Circuit Malfunction	● Open or short in engine coolant temp. sensor circuit ● Engine coolant temp. sensor ● ECM	○	○
P0116 (DI−37)	Engine Coolant Temp. Circuit Range/ Performance Problem	● Engine coolant temp. sensor ● Cooling system	○	○
	/Pedal Position Sensor/Switch nction	● Open or short in throttle position sensor circuit ● Throttle position sensor ● ECM		
	sition Sensor/ Switch rformance Prob-	● Throttle position sensor		

5. PROBLEM SYMPTOMS TABLE

The suspected circuits or parts for each problem symptom are shown in the table below. Use this table to troubleshoot when, during a DTC check, a ”Normal” code is displayed in the diagnostic trouble code check but the problem is still occurring. Numbers in the table show the inspection order in which the circuits or parts should be checked.

HINT:

In some cases, a problem is not detected by the diagnostic system even though a problem symptom is present. It is possible that the problem is occurring outside the detection range of the diagnostic system, or that the problem is occurring in a completely different system.

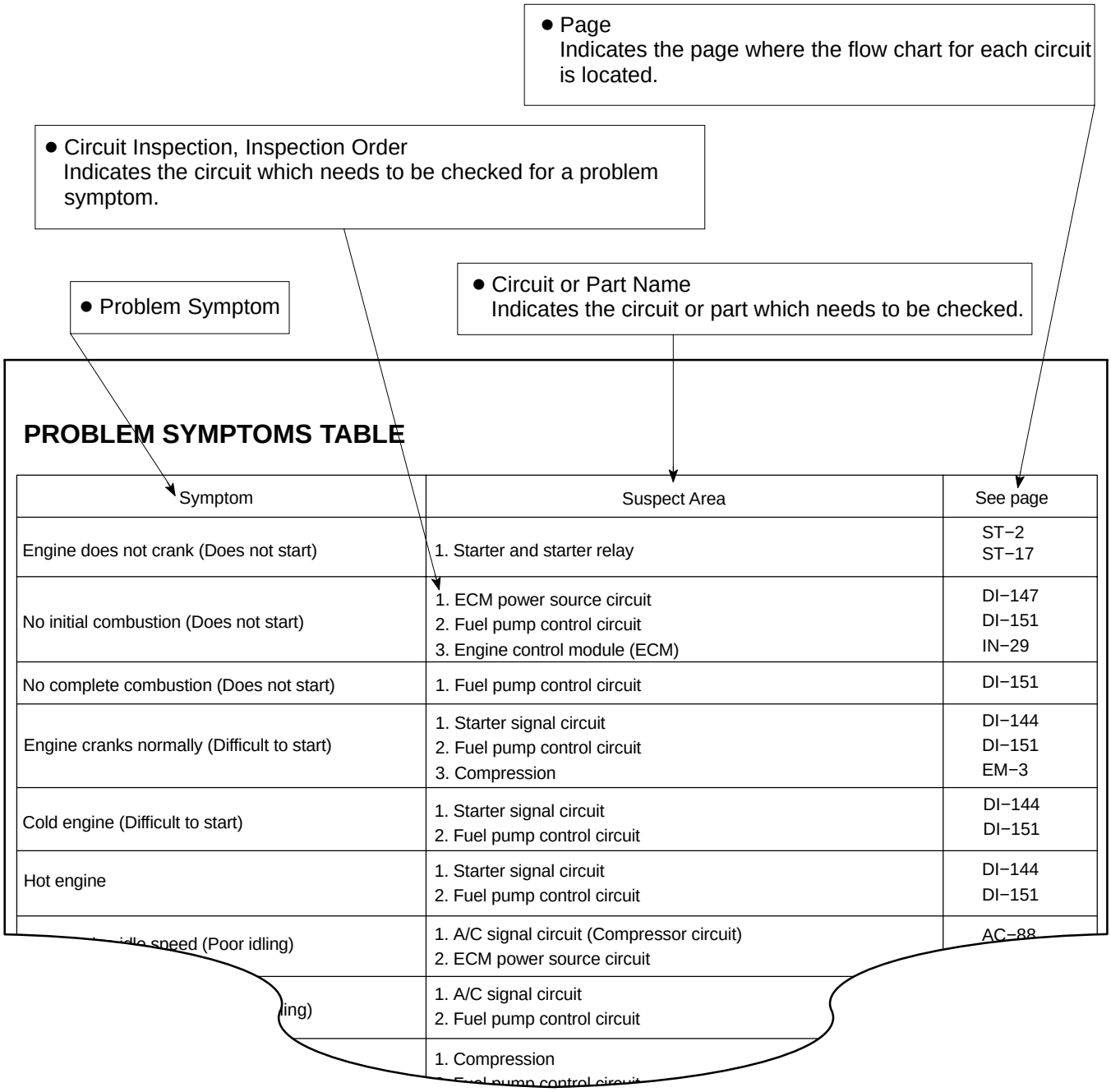

PROBLEM SYMPTOMS TABLE

Symptom	Suspect Area	See page
Engine does not crank (Does not start)	1. Starter and starter relay	ST–2 ST–17
No initial combustion (Does not start)	1. ECM power source circuit 2. Fuel pump control circuit 3. Engine control module (ECM)	DI–147 DI–151 IN–29
No complete combustion (Does not start)	1. Fuel pump control circuit	DI–151
Engine cranks normally (Difficult to start)	1. Starter signal circuit 2. Fuel pump control circuit 3. Compression	DI–144 DI–151 EM–3
Cold engine (Difficult to start)	1. Starter signal circuit 2. Fuel pump control circuit	DI–144 DI–151
Hot engine	1. Starter signal circuit 2. Fuel pump control circuit	DI–144 DI–151
idle speed (Poor idling)	1. A/C signal circuit (Compressor circuit) 2. ECM power source circuit	AC–88
ling)	1. A/C signal circuit 2. Fuel pump control circuit	
	1. Compression 2. Fuel pump control circuit	

6. CIRCUIT INSPECTION

How to read and use each page is shown below.

● Diagnostic Trouble Code No. and Detection Item

● Circuit Description
The major role and operation of the circuit and its component parts are explained.

DTC	P0325	Knock Sensor 1 Circuit Malfunction

CIRCUIT DESCRIPTION

Knock sensor is fitted to the cylinder block to detect engine knocking. This sensor contains a piezoelectric element which generates a voltage when it becomes deformed, which occurs when the cylinder block vibrates due to knocking. If engine knocking occurs, ignition timing is retarded to suppress it.

DTC No.	DTC Detecting Condition	Trouble Area
P0325	No knock sensor 1 signal to ECM with engine speed, 1,200 rpm or more.	● Open or short in knock sensor1 circuit ● Knock sensor 1 (looseness) ● ECM

If the ECM detects the above diagnosis conditions, it operates the fail safe function in which the corrective retard angle value is set to the maximum value.

● Indicates the diagnostic trouble code (DTC), set parameter and suspect area of the problem.

WIRING DIAGRAM

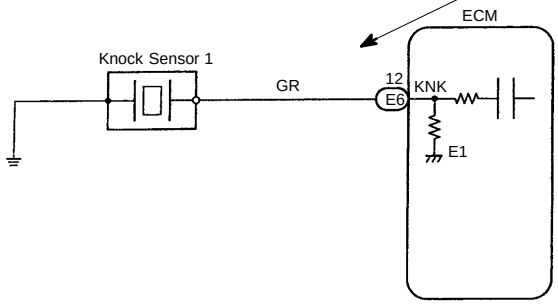

● Wiring Diagram
This is a wiring diagram of the circuit.
Use this diagram together with an ELECTRICAL WIRING DIAGRAM to thoroughly understand the circuit.
Wire colors are indicated by an alphabetical code:
B = Black; L = Blue; R = Red; BR = Brown;
LG = Light Green; V = Violet; G = Green;
O = Orange; W = White; GR = Gray; P = Pink;
Y = Yellow; SB = Sky Blue.
The first letter indicates the basic wire color and the second letter indicates the color of the stripe.

V08423

● Indicates the position of the ignition switch during the check.

LOCK
Ignition Switch LOCK (OFF)

ON
Ignition Switch ON

START
Ignition Switch START

ACC
Ignition Switch ACC

● Inspection Procedure
Use the inspection procedure to determine if the circuit is normal or abnormal. If it is abnormal, use it to determine whether the problem is located in the sensors, actuators, wire harness or ECU.

INSPECTION PROCEDURE

1	**Check continuity between terminal KNK of ECM connector and body ground.**

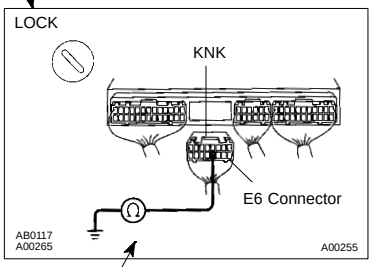

PREPARATION:
(a) Remove the glove compartment (See page SF–68).
(b) Disconnect the E6 connector of ECM.

CHECK:
Measure resistance between terminal KNK of ECM connector and body ground.

OK:
Resistance: 1 MΩ or higher

OK	**Go to step 3.**

NG

2	**Check knock sensor (See page SF–61).**

OK	**Replace knock sensor.**

● Indicates the place to check the voltage or resistance.
● Indicates the connector position to checked (from the front or back side).

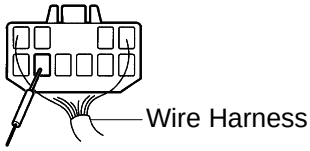

Check from the connector back side (with harness).



Check from the connector front side (without harness). In this case, care must be taken not to bend the terminals.

● Indicates the condition of the connector of ECU during the check.

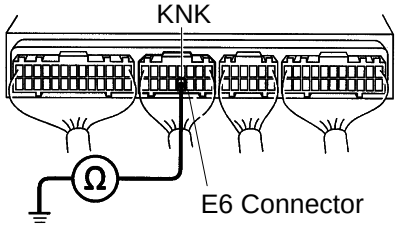

Connector being checked is connected.

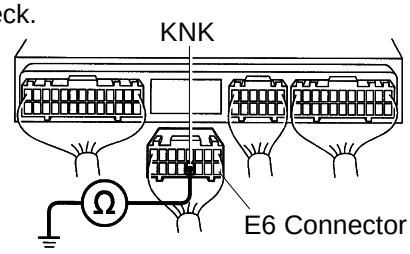

Connector being checked is disconnected.

V08425

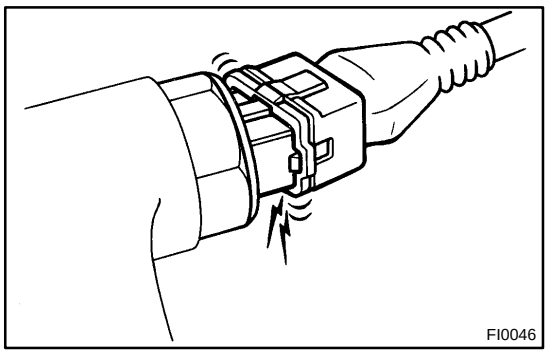
FI0046

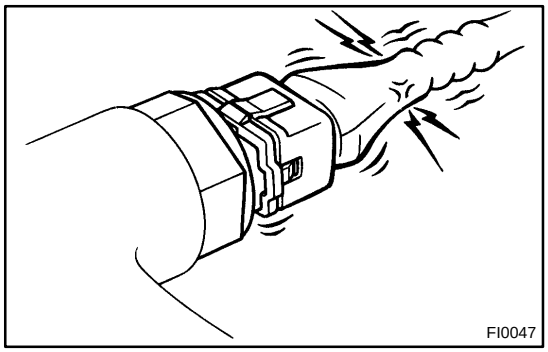
FI0047

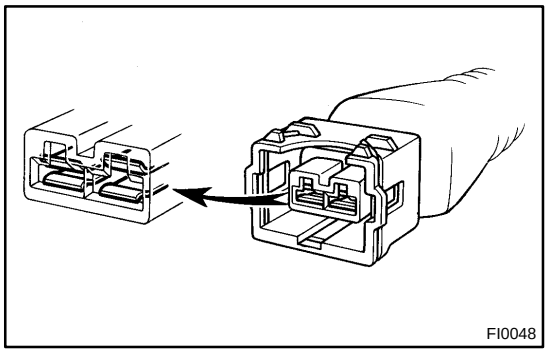
FI0048

IN05X−32

HOW TO USE THE DIAGNOSTIC CHART AND INSPECTION PROCEDURE

1. CONNECTOR CONNECTION AND TERMINAL INSPECTION

- For troubleshooting, diagnostic trouble code (DTC) charts or problem symptom table are provided for each circuit with detailed inspection procedures in this manual.
- When component parts, wire harnesses and connectors of each circuit are found to be normal in troubleshooting, the problem is most likely in the ECU. Accordingly, if diagnosis is performed without the problem symptoms occurring, refer to Step 8 to replace the ECU. Always confirm that the problem symptoms are occurring, or proceed with inspection while using the symptom simulation method.
- The instructions ”Check wire harness and connector” and ”Check and replace ECU” which appear in the inspection procedure are common and applicable to all DTCs. Follow the procedure outlined below whenever these instructions appear.

OPEN CIRCUIT:

An open circuit could result from a disconnected wire harness, a faulty contact in the connector, a connector terminal pulled out, etc.

HINT:

- A wire is rarely broken in its middle. Most problems occur at the wire ends. Carefully check the connectors of sensors and actuators.
- Faulty contacts could be due to rusting, contamination, and/or deformation of connector terminals. In some cases: 1) simply disconnecting and reconnecting the connectors will fix the problem, or 2) even though no abnormality is found in the wire harness or connector, the problem disappears after the check (meaning the cause was most likely in the wire harness or connectors).

SHORT CIRCUIT:

A short circuit could result from contact between the wire harness and the body ground or a short circuiting switch.

HINT:

When there is a short circuit between the wire harness and body ground, check thoroughly if wire harness is caught in the body or is clamped properly.

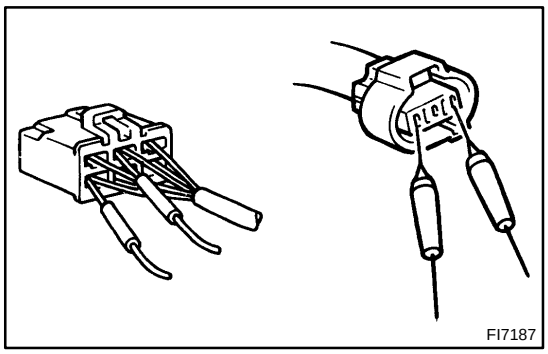

2. CONNECTOR HANDLING

When inserting tester probes into a connector, insert them from the rear of the connector. When necessary, use mini test leads. For water resistant connectors which cannot be accessed from behind, take good care not to deform the connector terminals.

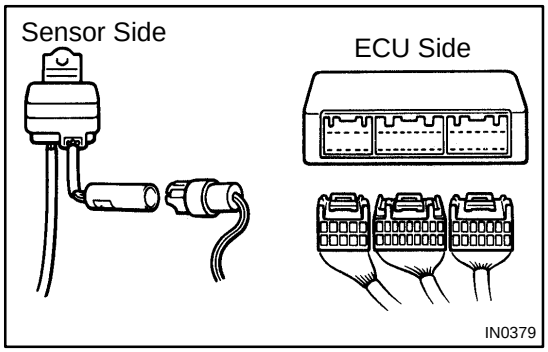

3. CONTINUITY CHECK (OPEN CIRCUIT CHECK)

(a) Disconnect the connectors at both ECU and sensor sides.

(b) Measure the resistance between the applicable terminals of the connectors.

Resistance: Below 1 Ω

HINT:

Measure the resistance while lightly shaking the wire harness vertically and horizontally.

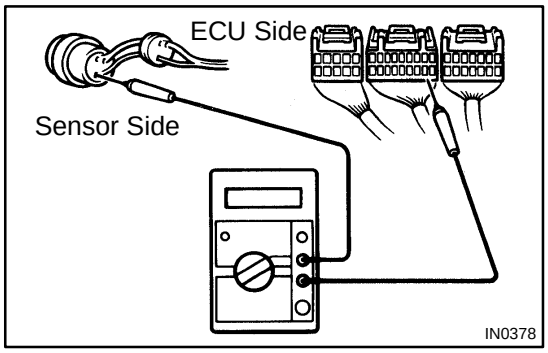

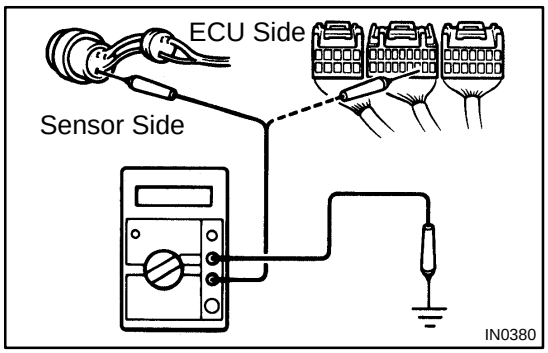

4. RESISTANCE CHECK (SHORT CIRCUIT CHECK)

(a) Disconnect the connectors on both ends.

(b) Measure the resistance between the applicable terminals of the connectors and body ground. Be sure to carry out this check on the connectors on both ends.

Resistance: 10 kΩ or higher

HINT:

Measure the resistance while lightly shaking the wire harness vertically and horizontally.

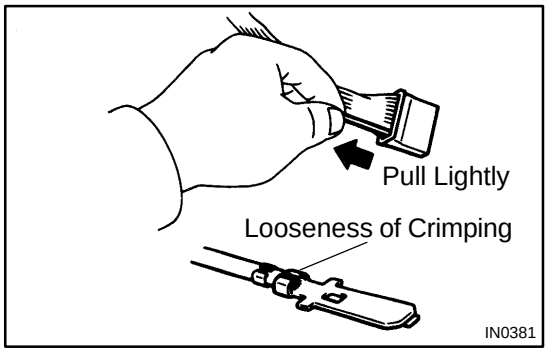

5. VISUAL CHECK AND CONTACT PRESSURE CHECK

(a) Disconnect the connectors at both ends.

(b) Check for rust or foreign material, etc. in the terminals of the connectors.

(c) Check crimped portions for looseness or damage and check that the terminals are secured in the lock portion.

HINT:

The terminals should not come out when pulled lightly from the back.

(d) Prepare a test male terminal and insert it in the female terminal, then pull it out.

NOTICE:

When testing a gold−plated female terminal, always use a gold−plated male terminal.

HINT:

If a test terminal is pulled out more easily than others, there may be poor contact in that section.

Fig. 1

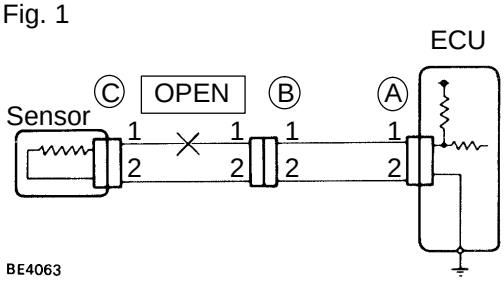

6. CHECK OPEN CIRCUIT

For an open circuit in the wire harness in Fig. 1, perform a continuity check (step (a) below) or a voltage check (step (b) below).

Fig. 2

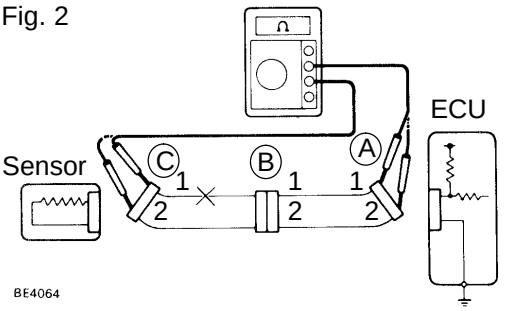

(a) Check the continuity.

(1) Disconnect connectors A and C and measure the resistance between them.

In the case of Fig. 2:

Between terminal 1 of connector A and terminal 1 of connector C → 10 kΩ or higher (open)

Between terminal 2 of connector A and terminal 2 of connector C → Below 1 Ω

An open circuit exists in the wire harness between terminal 1 of A and terminal 1 of C.

Fig. 3

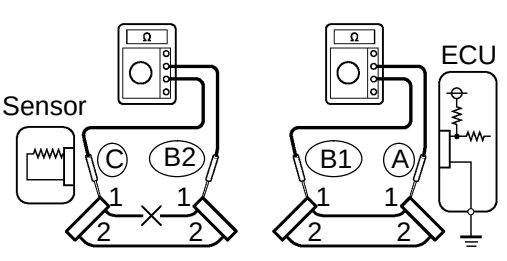

(2) Disconnect connector B and measure the resistance between the connectors.

In the case of Fig. 3:

Between terminal 1 of connector A and terminal 1 of connector B1 → Below 1 Ω

Between terminal 1 of connector B2 and terminal 1 of connector C → 10 kΩ or higher (open)

An open circuit exists in the wire harness between terminal 1 of B2 and terminal 1 of C.

Fig. 4

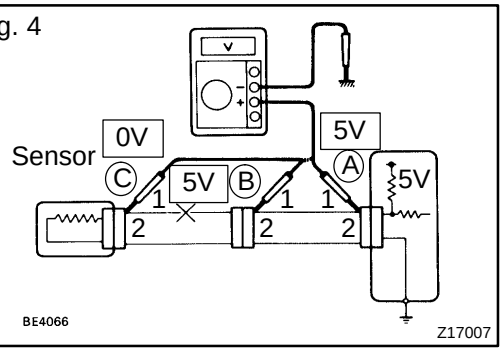

(b) Check the voltage.

In a circuit in which voltage is applied to the ECU connector terminal, an open circuit can be checked by conducting a voltage check.

As shown in Fig. 4, with each connector still connected, measure the voltage between body ground and terminal 1 of connector A at the ECU 5V output terminal, terminal 1 of connector B, and terminal 1 of connector C (in that order).

Example results:

5V: Between Terminal 1 of connector A and Body Ground

5V: Between Terminal 1 of connector B and Body Ground

0V: Between Terminal 1 of connector C and Body Ground

In the above example, an open circuit is in the wire harness between terminal 1 of B and terminal 1 of C.

Fig. 5

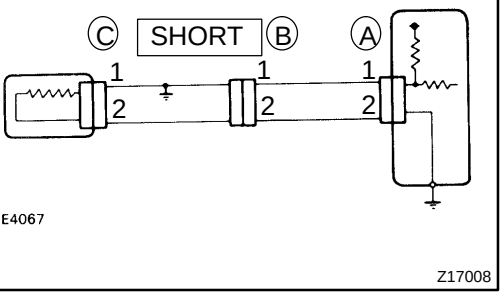

7. CHECK SHORT CIRCUIT

If the wire harness is shorted (Fig. 5), locate the section by conducting a resistance check with ground below.

Fig. 6

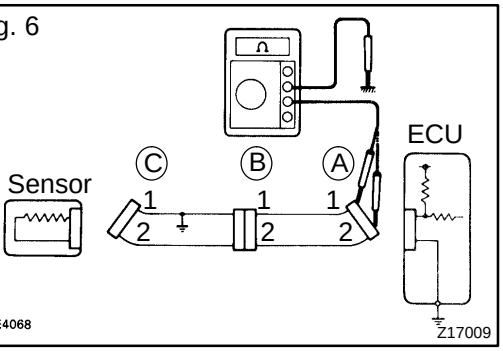

Check the resistance with ground.

(1) Disconnect connectors A and C and measure the resistance between terminals 1 and 2 of connector A and body ground.

In the case of Fig. 6:

Between terminal 1 of connector A and body ground $\rightarrow$ Below 1 Ω (short)

Between terminal 2 of connector A and body ground $\rightarrow$ 10 kΩ or higher

A short circuit is between terminal 1 of connector A and terminal 1 of connector C.

Fig. 7

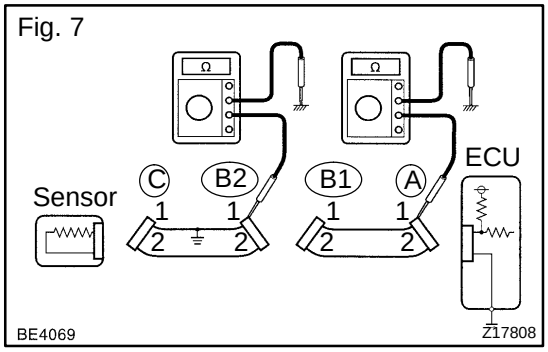

(2) Disconnect connector B and measure the resistance between terminal 1 of connector A and body ground, and terminal 1 of connector B2 and body ground.
In the case of Fig. 7:
Between terminal 1 of connector A and body ground → 10 kΩ or higher
Between terminal 1 of connector B2 and body ground → Below 1 Ω (short)
A short circuit is between terminal 1 of connector B2 and terminal 1 of connector C.

8. CHECK AND REPLACE ECU

First check the ECU ground circuit. If it is faulty, repair it. If it is normal, the ECU could be faulty. Replace the ECU with a functioning one and check if the symptoms occur.
If the trouble symptoms stop, replace the ECU.

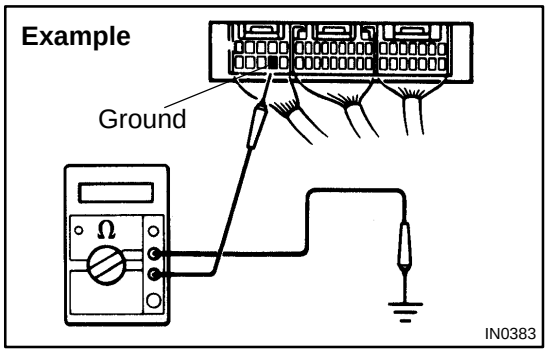

(1) Measure the resistance between the ECU ground terminal and the body ground.

Resistance: Below 1 Ω

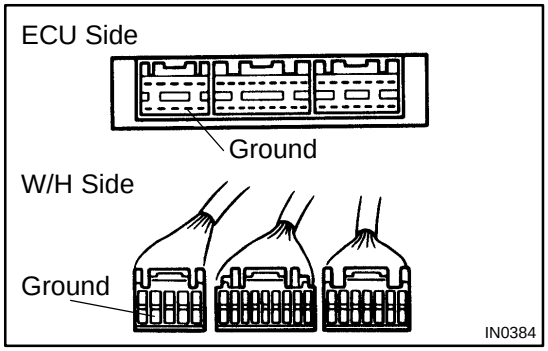

(2) Disconnect the ECU connector. Check for bent ground terminals (on the ECU side and the wire harness side). Lastly, check the contact pressure.

HOW TO USE THIS MANUAL

IN0KN−01

GENERAL INFORMATION

1. INDEX

An INDEX is provided on the first page of each section to guide you to the item to be repaired. To assist you in finding your way through the manual, the section title and major heading are given at the top of every page.

2. PRECAUTION

At the beginning of each section, a PRECAUTION that pertains to all repair operations contained in that section is given.

Read these precautions before starting any repair task.

3. TROUBLESHOOTING

TROUBLESHOOTING tables are included for each system to help you diagnose the problem and find the cause. The fundamentals of how to proceed with troubleshooting are described on page IN−19.

Be sure to read this before performing troubleshooting.

4. PREPARATION

Preparation lists the SST (Special Service Tools), recommended tools, equipment, lubricant and SSM (Special Service Materials) which should be prepared before beginning the operation and explains the purpose of each one.

5. REPAIR PROCEDURES

Most repair operations begin with an overview illustration. It identifies the components and shows how the parts fit together.

Example:

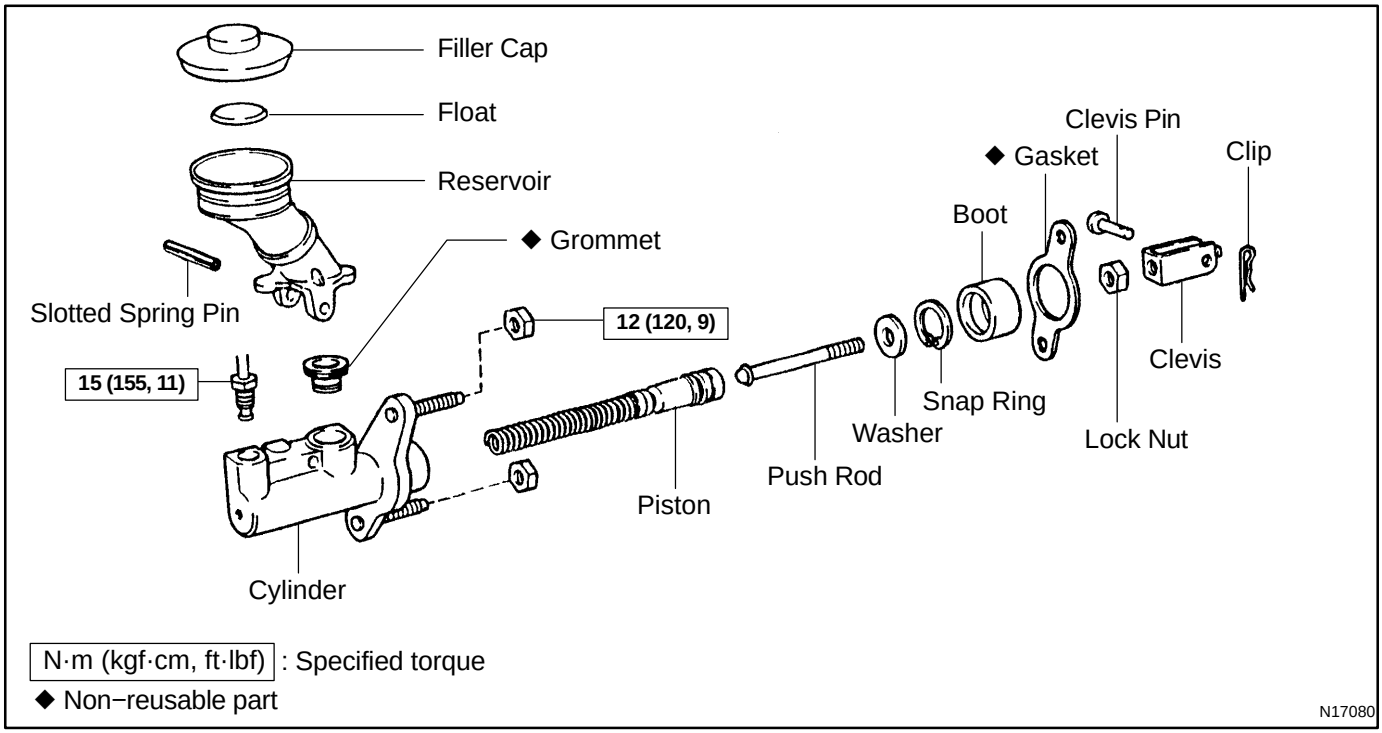

The procedures are presented in a step−by−step format:

- The illustration shows what to do and where to do.
- The task heading tells what to do.
- The detailed text tells how to perform the task and gives other information such as specifications and warnings.

Example:

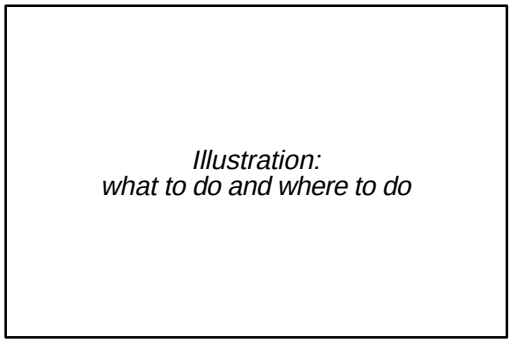

Task heading : what to do

21. CHECK PISTON STROKE OF OVERDRIVE BRAKE

(a) Place SST and a dial indicator onto the overdrive brake piston as shown in the illustration.

SST 09350−30020 (09350−06120)

Set part No. *Component part No.*

Detailed text : how to do task

(b) Measure the stroke applying and releasing the compressed air (392 — 785 kPa, 4 — 8 kgf/cm^2 or 57 — 114 psi) as shown in the illustration.

Piston stroke: 1.40 — 1.70 mm (0.0551 — 0.0669 in.)

Specification

This format provides the experienced technician with a FAST TRACK to the information needed. The upper case task heading can be read at a glance when necessary, and the text below it provides detailed information. Important specifications and warnings always stand out in bold type.

6. REFERENCES

References have been kept to a minimum. However, when they are required, you are given the page to refer to.

7. SPECIFICATIONS

Specifications are presented in bold type throughout the text where needed. You never have to leave the procedure to look up your specifications. They are also found in Service Specifications section for quick reference.

8. CAUTIONS, NOTICES, HINTS:

- CAUTIONS are presented in bold type, and indicate there is a possibility of injury to you or other people.
- NOTICES are also presented in bold type, and indicate the possibility of damage to the components being repaired.
- HINTS are separated from the text but do not appear in bold. They provide additional information to help you perform the repair efficiently.

9. SI UNIT

The UNITS given in this manual are primarily expressed according to the SI UNIT (International System of Unit), and alternately expressed in the metric system and in the English System.

Example:

Torque: 30 N·m (310 kgf·cm, 22 ft·lbf)

IDENTIFICATION INFORMATION

IN01P−08

VEHICLE IDENTIFICATION AND ENGINE SERIAL NUMBER

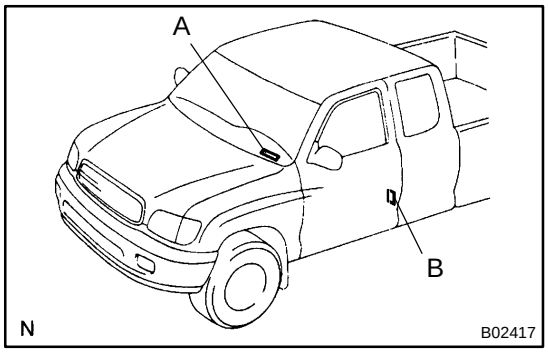

1. VEHICLE IDENTIFICATION NUMBER

The vehicle identification number is stamped on the vehicle identification number plate and certification label.

A: Vehicle Identification Number Plate

B: Certification Label

1GR−FE Engine

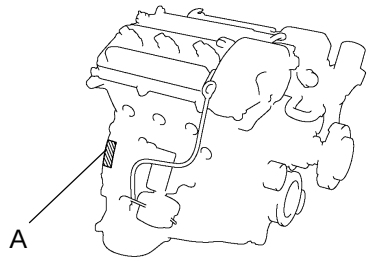

2UZ−FE Engine

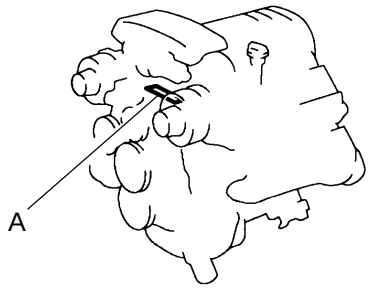

2. ENGINE SERIAL NUMBER

The engine serial number is stamped on the engine block, as shown in the illustration.

A: Engine Serial Number

REPAIR INSTRUCTIONS

IN0CO−32

GENERAL INFORMATION

BASIC REPAIR HINT

(a) Prevent damage and maintain vehicle cleanliness by protective covering on the fender, seat and floor.

(b) During disassembly, line up parts in the order they were removed to facilitate reassembly.

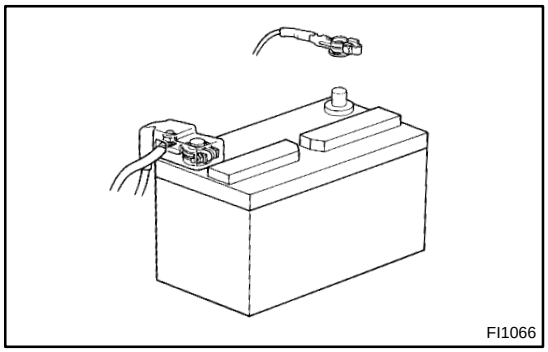

FI1066

(c) Installation and removal of battery terminal:

NOTICE:

When connecting the negative (−) terminal make sure that the steering wheel is centered.

(1) Before performing electrical work, disconnect the negative (−) terminal cable from the battery.

(2) If it is necessary to disconnect the battery for inspection or repair, first disconnect the negative (−) terminal cable.

(3) To prevent damage to the battery terminal when disconnecting the terminal cable, loosen the cable nut and raise the cable straight up. Do not twist or pry the cable off.

(4) Clean the battery terminals and cable ends with a clean shop rag. Do not scrape them with a file or other abrasive objects.

(5) Install the cable ends to the battery terminals after loosening the nut, and tighten the nut after installation. Do not use a hammer to tap the cable ends onto the terminals.

(6) Be sure the cover for the positive (+) terminal is properly in place.

(d) Check hose and wiring connectors to make sure that they are connected securely and correctly.

(e) Non−reusable parts:

(1) Always replace cotter pins, gaskets, O−rings, oil seals, etc. with new ones.

(2) Non−reusable parts are indicated in component illustrations by the "◆" symbols.

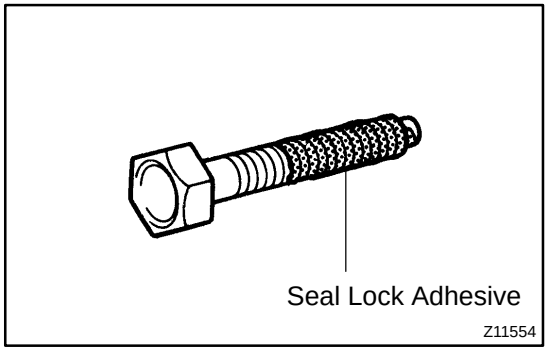

Z11554

(f) Precoated parts

Precoated parts are bolts, nuts, etc. that are coated with a seal lock adhesive at the factory.

(1) If a precoated part is retightened, loosened or caused to move in any way, it must be recoated with the specified adhesive.

(2) When reusing precoated parts, clean off the old adhesive and dry with compressed air. Then apply new seal lock adhesive to the bolt, nut or threads.

(3) Precoated parts are indicated in component illustrations by the "★" symbols.

(g) When necessary, use a sealer on gaskets to prevent leaks.

(h) Carefully observe all specifications for bolt tightening torques. Always use a torque wrench.

(i) Use of special service tools (SST) and special service materials (SSM) may be required, depending on the nature of the repair. Be sure to use SST and SSM where specified and follow the proper work procedure. A list of SST and SSM can be found in the Preparation section in this manual.

Medium Current Fuse and High Current Fuse Equal Amperage Rating

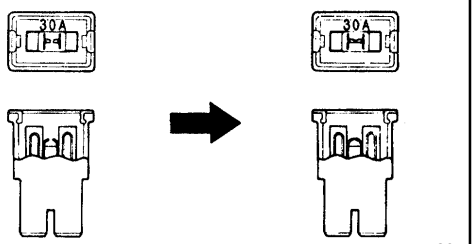

BE1367

(j) When replacing fuses, be sure the new fuse has the correct amperage rating. DO NOT exceed the rating or use one with a lower rating.

Illustration	Symbol	Part Name	Abbreviation
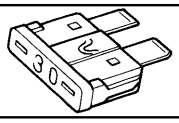 BE5594	 IN0365	FUSE	FUSE
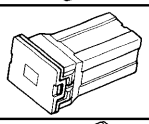 BE5595	 IN0366	MEDIUM CURRENT FUSE	M−FUSE
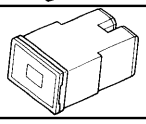 BE5596	 IN0367	HIGH CURRENT FUSE	H−FUSE
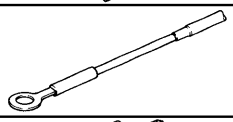 BE5597	 IN0367	FUSIBLE LINK	FL
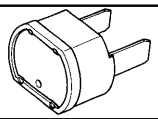 BE5598	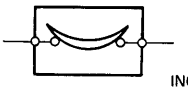 IN0368	CIRCUIT BREAKER	CB

(k) Care must be taken when jacking up and supporting the vehicle. Be sure to lift and support the vehicle at the proper locations (see page IN−8).
- Release the parking brake on a level surface and shift to the N position.
- When jacking up the front wheels of the vehicle, first place chocks behind the rear wheels.
- When jacking up the rear wheels of the vehicle, place chocks in front of the front wheels.
- When jacking up only the front or rear wheels, set rigid racks and place chocks on front and behind the wheels in contact with the ground.
- After the vehicle is jacked up, be sure to support it on rigid racks. It is extremely dangerous to do any work on a vehicle raised on a jack alone, even for a job that can be finished quickly.

(l) Observe the following precautions to avoid damage to the following parts:
(1) Do not open the cover or case of the ECU unless absolutely necessary. (Static electricity transmitted through human touch may destroy the IC.)

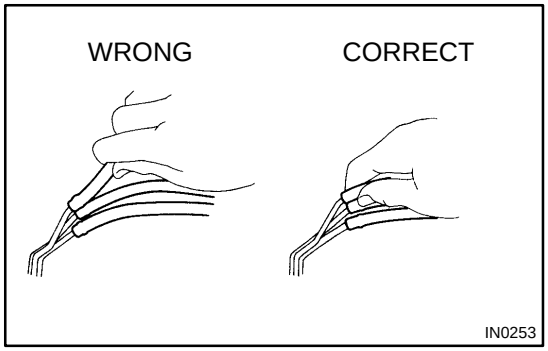

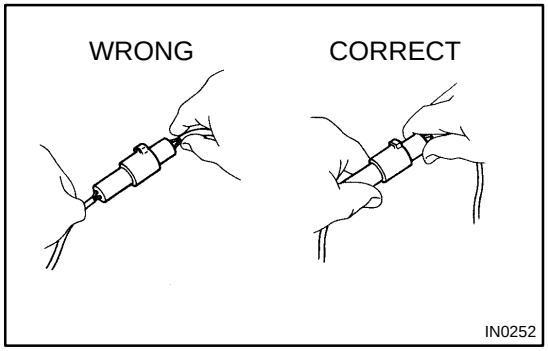

(2) To disconnect vacuum hoses, pull off the end of the hose, not the middle.
(3) To pull apart electrical connectors, pull on the connector itself, not the wires.
(4) Be careful not to drop electrical components, such as sensors or relays. If they are dropped on a hard floor, they should be replaced and not reused.
(5) When steam cleaning an engine, protect the electronic components, air filter and emission−related components from water.
(6) Never use an impact wrench to remove or install temperature switches or temperature sensors.
(7) When checking continuity at the wire connector, insert the tester probe carefully to prevent terminals from bending.
(8) When using a vacuum gauge, never force the hose onto a connector that is too large. Use a step−down adapter for adjustment. Once the hose has been stretched, it may leak air.

Example

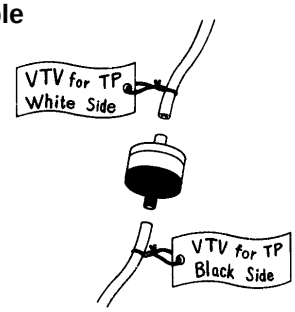

IN0002

(m) Installation and removal of vacuum hose:
  (1) When disconnecting vacuum hoses, use tags to identify where they should be reconnected to.
  (2) After completing a job, double check that the vacuum hoses are properly connected. A label under the hood shows the proper layout.

(n) Unless otherwise stated, all resistance should be measured at an ambient temperature of 20˚C (68˚F). Measurement should be made after the engine has cooled down. If measured at high temperatures immediately after the vehicle has been running, resistance may be outside specifications.

IN0DY−05

VEHICLE LIFT AND SUPPORT LOCATIONS

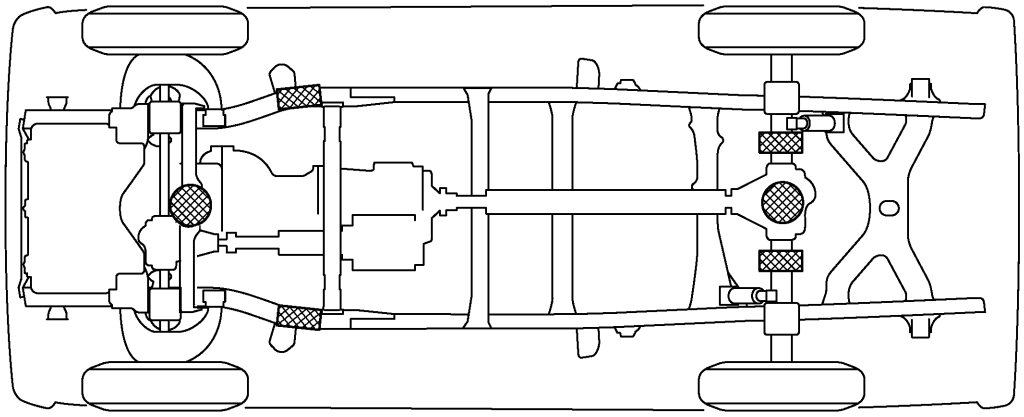

JACK POSITION • • • • • • • • • • • • • • • • • •

Front • • • • • • • • • • Center of crossmember

Rear • • • • • • • • • • Center of rear axle housing

SUPPORT POSITION

Safety stand • • • • • • • • • • • • • • • • •

T

B07972

TERMS

IN04Q−34

ABBREVIATIONS USED IN THIS MANUAL

Abbreviations	Meaning
ABS	Anti−Lock Brake System
A/C	Air Conditioner
AC	Alternating Current
ACC	Accessory
ACIS	Acoustic Control Induction System
ACM	Active Control Engine Mount
ACSD	Automatic Cold Start Device
A.D.D.	Automatic Disconnecting Differential
A/F	Air−Fuel Ratio
AHC	Active Height Control Suspension
ALR	Automatic Locking Retractor
ALT	Alternator
AMP	Amplifier
ANT	Antenna
APPROX.	Approximately
ASSY	Assembly
A/T, ATM	Automatic Transmission (Transaxle)
ATF	Automatic Transmission Fluid
AUTO	Automatic
AUX	Auxiliary
AVG	Average
AVS	Adaptive Variable Suspension
B+	Battery Voltage
BA	Brake Assist
BACS	Boost Altitude Compensation System
BAT	Battery
BDC	Bottom Dead Center
B/L	Bi−Level
B/S	Bore−Stroke Ratio
BTDC	Before Top Dead Center
BVSV	Bimetallic Vacuum Switching Valve
CB	Circuit Breaker
CCo	Catalytic Converter For Oxidation
CCV	Canister Closed Valve
CD	Compact Disc
CF	Cornering Force
CG	Center Of Gravity
CH	Channel
CKD	Complete Knock Down
COMB.	Combination
CPE	Coupe
CPS	Combustion Pressure Sensor
CPU	Central Processing Unit
CRS	Child Restraint System
CTR	Center
C/V	Check Valve
CV	Control Valve
CW	Curb Weight

DC	Direct Current
DEF	Defogger
DFL	Deflector
DIFF.	Differential
DIFF. LOCK	Differential Lock
D/INJ	Direct Injection
DLC	Data Link Connector
DLI	Distributorless Ignition
DOHC	Double Overhead Camshaft
DP	Dash Pot
DS	Dead Soak
DSP	Digital Signal Processor
DTC	Diagnostic Trouble Code
DVD	Digital Versatible Disc
EBD	Electric Brake Force Distribution
EC	Electrochoromic
ECAM	Engine Control And Measurement System
ECD	Electronically Controlled Diesel
ECDY	Eddy Current Dynamometer
ECT	Electronic Control Transmission
ECU	Electronic Control Unit
ED	Electro−Deposited Coating
EDU	Electronic Driving Unit
EDIC	Electric Diesel Injection Control
EFI	Electronic Fuel Injection
E/G	Engine
EGR	Exhaust Gas Recirculation
EGR−VM	EGR−Vacuum Modulator
ELR	Emergency Locking Retractor
EMPS	Electric Motor Power Steering
ENG	Engine
ESA	Electronic Spark Advance
ETCS−i	Electronic Throttle Control System−intelligent
EVAP	Evaporative Emission Control
EVP	Evaporator
E−VRV	Electric Vacuum Regulating Valve
EX	Exhaust
FE	Fuel Economy
FF	Front−Engine Front−Wheel−Drive
F/G	Fuel Gauge
FIPG	Formed In Place Gasket
FL	Fusible Link
F/P	Fuel Pump
FPU	Fuel Pressure Up
FR	Front
F/W	Flywheel
FW/D	Flywheel Damper
FWD	Front−Wheel−Drive
GAS	Gasoline
GND	Ground
GPS	Global Positioning System
HAC	High Altitude Compensator

H/B	Hatchback
H−FUSE	High Current Fuse
HI	High
HID	High Intensity Discharge (Head Lamp)
HSG	Housing
HT	Hard Top
HWS	Heated Windshield System
IC	Integrated Circuit
IDI	Indirect Diesel Injection
IFS	Independent Front Suspension
IG	Ignition
IIA	Integrated Ignition Assembly
IN	Intake (Manifold, Valve)
INT	Intermittent
I/P	Instrument Panel
IRS	Independent Rear Suspension
ISC	Idle Speed Control
J/B	Junction Block
J/C	Junction Connector
KD	Kick−Down
LAN	Local Area Network
LB	Liftback
LCD	Liquid Crystal Display
LED	Light Emitting Diode
LH	Left−Hand
LHD	Left−Hand Drive
L/H/W	Length, Height, Width
LLC	Long−Life Coolant
LNG	Liquified Natural Gas
LO	Low
LPG	Liquified Petroleum Gas
LSD	Limited Slip Differential
LSP & PV	Load Sensing Proportioning And Bypass Valve
LSPV	Load Sensing Proportioning Valve
MAP	Manifold Absolute Pressure
MAX.	Maximum
MIC	Microphone
MIL	Malfunction Indicator Lamp
MIN.	Minimum
MG1	Motor Generator No.1
MG2	Motor Generator No.2
MP	Multipurpose
MPI	Multipoint Electronic Injection
MPX	Multiplex Communication System
M/T, MTM	Manual Transmission (Transaxle)
MT	Mount
MTG	Mounting
N	Neutral
NA	Natural Aspiration
NO.	Number
O2S	Oxygen Sensor
O/D	Overdrive

OEM	Original Equipment Manufacturing
OHC	Overhead Camshaft
OHV	Overhead Valve
OPT	Option
ORVR	On−board Refilling Vapor Recovery
O/S	Oversize
P & BV	Proportioning And Bypass Valve
PCS	Power Control System
PCV	Positive Crankcase Ventilation
PKB	Parking Brake
PPS	Progressive Power Steering
PS	Power Steering
PTC	Positive Temperature Coefficient
PTO	Power Take−Off
P/W	Power Window
R & P	Rack And Pinion
RAM	Random Access Memory
R/B	Relay Block
RBS	Recirculating Ball Type Steering
R/F	Reinforcement
RFS	Rigid Front Suspension
RH	Right−Hand
RHD	Right−Hand Drive
RLY	Relay
ROM	Read Only Memory
RR	Rear
RRS	Rigid Front Suspension
RWD	Rear−Wheel Drive
SDN	Sedan
SEN	Sensor
SICS	Starting Injection Control System
SOC	State Of Charge
SOHC	Single Overhead Camshaft
SPEC	Specification
SPI	Single Point Injection
SRS	Supplemental Restraint System
SSM	Special Service Materials
SST	Special Service Tools
STD	Standard
STJ	Cold−Start Fuel Injection
SW	Switch
SYS	System
T/A	Transaxle
TACH	Tachometer
TBI	Throttle Body Electronic Fuel Injection
TC	Turbocharger
TCCS	TOYOTA Computer−Controlled System
TCV	Timing Control Valve
TDC	Top Dead Center
TEMP.	Temperature
TEMS	TOYOTA Electronic Modulated Suspension
TFT	TOYOTA Free−Tronic

TIS	Total Information System For Vehicle Development
T/M	Transmission
TMC	TOYOTA Motor Corporation
TMMK	TOYOTA Motor Manufacturing Kentucky, Inc.
TRC	Traction Control System
TURBO	Turbocharge
TWC	Three−Way Catalyst
U/D	Underdrive
U/S	Undersize
VCV	Vacuum Control Valve
VENT	Ventilator
VIM	Vehicle Interface Module
VIN	Vehicle Identification Number
VPS	Variable Power Steering
VSC	Vehicle Skid Control
VSV	Vacuum Switching Valve
VTV	Vacuum Transmitting Valve
VVT−i	Variable Valve Timing−intelligent
W/	With
WGN	Wagon
W/H	Wire Harness
W/O	Without
1ST	First
2ND	Second
2WD	Two Wheel Drive Vehicle (4 x 2)
3RD	Third
4TH	Fourth
4WD	Four Wheel Drive Vehicle (4 x 4)
4WS	Four Wheel Steering System
5TH	Fifth

IN0CI−10

GLOSSARY OF SAE AND TOYOTA TERMS

This glossary lists all SAE−J1930 terms and abbreviations used in this manual in compliance with SAE recommendations, as well as their TOYOTA equivalents.

SAE ABBREVIATIONS	SAE TERMS	TOYOTA TERMS ( )−−ABBREVIATIONS
A/C	Air Conditioning	Air Conditioner
ACL	Air Cleaner	Air Cleaner, A/CL
AIR	Secondary Air Injection	Air Injection (AI)
AP	Accelerator Pedal	−
B+	Battery Positive Voltage	+B, Battery Voltage
BARO	Barometric Pressure	HAC
CAC	Charge Air Cooler	Intercooler
CARB	Carburetor	Carburetor
CFI	Continuous Fuel Injection	−
CKP	Crankshaft Position	Crank Angle
CL	Closed Loop	Closed Loop
CMP	Camshaft Position	Cam Angle
CPP	Clutch Pedal Position	−
CTOX	Continuous Trap Oxidizer	−
CTP	Closed Throttle Position	LL ON, Idle ON
DFI	Direct Fuel Injection	Direct Injection (DI/INJ)
DI	Distributor Ignition	−
DLC3	Data Link Connector 3	OBD II Diagnostic Connector
DTC	Diagnostic Trouble Code	Diagnostic Trouble Code
DTM	Diagnostic Test Mode	−
ECL	Engine Coolant Level	−
ECM	Engine Control Module	Engine ECU (Electronic Control Unit)
ECT	Engine Coolant Temperature	Coolant Temperature, Water Temperature (THW)
EEPROM	Electrically Erasable Programmable Read Only Memory	Electrically Erasable Programmable Read Only Memory (EEPROM), Erasable Programmable Read Only Memory (EPROM)
EFE	Early Fuel Evaporation	Cold Mixture Heater (CMH), Heat Control Valve (HCV)
EGR	Exhaust Gas Recirculation	Exhaust Gas Recirculation (EGR)
EI	Electronic Ignition	Distributorless Ignition (DLI)
EM	Engine Modification	Engine Modification (EM)
EPROM	Erasable Programmable Read Only Memory	Programmable Read Only Memory (PROM)
EVAP	Evaporative Emission	Evaporative Emission Control (EVAP)
FC	Fan Control	−
FEEPROM	Flash Electrically Erasable Programmable Read Only Memory	−
FEPROM	Flash Erasable Programmable Read Only Memory	−
FF	Flexible Fuel	−
FP	Fuel Pump	Fuel Pump
GEN	Generator	Alternator
GND	Ground	Ground (GND)
HO2S	Heated Oxygen Sensor	Heated Oxygen Sensor (HO_2S)

IAC	Idle Air Control	Idle Speed Control (ISC)
IAT	Intake Air Temperature	Intake or Inlet Air Temperature
ICM	Ignition Control Module	−
IFI	Indirect Fuel Injection	Indirect Injection (IDL)
IFS	Inertia Fuel−Shutoff	−
ISC	Idle Speed Control	−
KS	Knock Sensor	Knock Sensor
MAF	Mass Airflow	Air Flow Meter
MAP	Manifold Absolute Pressure	Manifold Pressure Intake Vacuum
MC	Mixture Control	Electric Bleed Air Control Valve (EBCV) Mixture Control Valve (MCV) Electric Air Control Valve (EACV)
MDP	Manifold Differential Pressure	−
MFI	Multiport Fuel Injection	Electronic Fuel Injection (EFI)
MIL	Malfunction Indicator Lamp	Check Engine Lamp
MST	Manifold Surface Temperature	−
MVZ	Manifold Vacuum Zone	−
NVRAM	Non−Volatile Random Access Memory	−
O2S	Oxygen Sensor	Oxygen Sensor, O_2 Sensor (O_2S)
OBD	On−Board Diagnostic	On−Board Diagnostic System (OBD)
OC	Oxidation Catalytic Converter	Oxidation Catalyst Convert (OC), CCo
OL	Open Loop	Open Loop
PAIR	Pulsed Secondary Air Injection	Air Suction (AS)
PCM	Powertrain Control Module	−
PNP	Park/Neutral Position	−
PROM	Programmable Read Only Memory	−
PSP	Power Steering Pressure	−
PTOX	Periodic Trap Oxidizer	Diesel Particulate Filter (DPF) Diesel Particulate Trap (DPT)
RAM	Random Access Memory	Random Access Memory (RAM)
RM	Relay Module	−
ROM	Read Only Memory	Read Only Memory (ROM)
RPM	Engine Speed	Engine Speed
SC	Supercharger	Supercharger
SCB	Supercharger Bypass	E−ABV
SFI	Sequential Multiport Fuel Injection	Electronic Fuel Injection (EFI), Sequential Injection
SPL	Smoke Puff Limiter	−
SRI	Service Reminder Indicator	−
SRT	System Readiness Test	−
ST	Scan Tool	−
TB	Throttle Body	Throttle Body
TBI	Throttle Body Fuel Injection	Single Point Injection Central Fuel Injection (Ci)
TC	Turbocharger	Turbocharger
TCC	Torque Converter Clutch	Torque Converter
TCM	Transmission Control Module	Transmission ECU, ECT ECU

TP	Throttle Position	Throttle Position
TR	Transmission Range	−
TVV	Thermal Vacuum Valve	Bimetallic Vacuum Switching Valve (BVSV) Thermostatic Vacuum Switching Valve (TVSV)
TWC	Three−Way Catalytic Converter	Three−Way Catalytic (TWC) Manifold Converter CC_{RO}
TWC+OC	Three−Way + Oxidation Catalytic Converter	CC_R + CCo
VAF	Volume Airflow	Air Flow Meter
VR	Voltage Regulator	Voltage Regulator
VSS	Vehicle Speed Sensor	Vehicle Speed Sensor
WOT	Wide Open Throttle	Full Throttle
WU−OC	Warm Up Oxidation Catalytic Converter	−
WU−TWC	Warm Up Three−Way Catalytic Converter	−
3GR	Third Gear	−
4GR	Fourth Gear	−

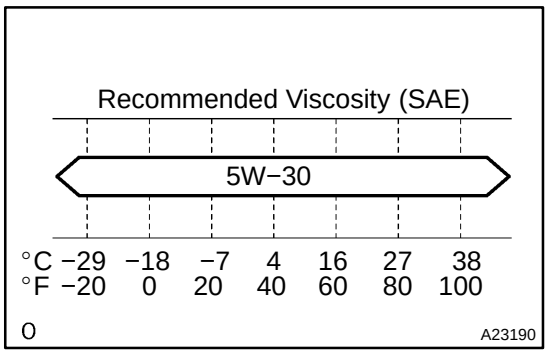

OIL AND FILTER

LU0Q8−01

INSPECTION

1. CHECK ENGINE OIL QUALITY

(a) Check the oil for deterioration, water mixing, discoloring or thinning.

(b) If the oil quality is visibly poor, replace it.

Oil grade:

ILSAC multigrade engine oil.

SAE 5W−30 is the best choice for good fuel economy, and good starting in cold weather.

If SAE 5W−30 is not available, SAE 10W−30 may be used. However, it should be replaced with SAE 5W−30 at the next oil replacement.

2. CHECK ENGINE OIL LEVEL

Check the engine oil level 5 minutes or more after the engine has stopped.

If the engine is too hot, a false level will be read. The oil level should be between the low and full level marks of the dipstick. If it is below the low level mark, check for leakage and add oil up to the full level mark.

NOTICE:

Do not fill with engine oil over the full level mark.

3. REMOVE OIL PRESSURE SWITCH ASSY

(a) Disconnect the oil pressure switch connector.

(b) Using a 24 mm deep socket wrench, remove the oil pressure switch.

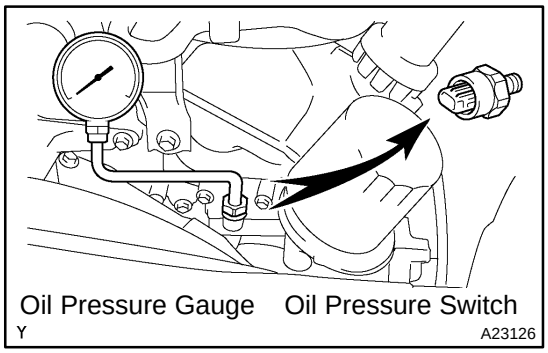

4. INSTALL OIL PRESSURE GAUGE

(a) Install the oil pressure gauge.

5. WARM UP ENGINE

6. CHECK OIL PRESSURE

Oil pressure:

At idle	29 kPa (0.3 kgf·cm^2, 4.3 psi) or more
At 3,000 rpm	294 to 588 kPa (3.0 to 6.0 kgf·cm^2, 43 to 85 psi)

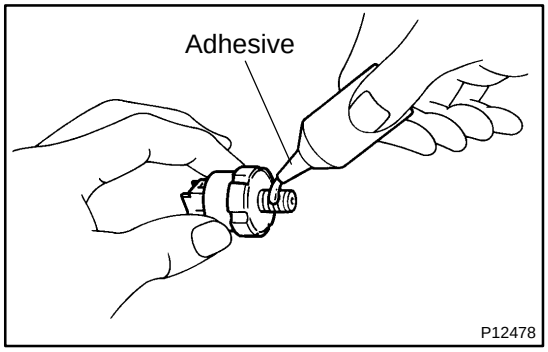

7. INSTALL OIL PRESSURE SWITCH

(a) Remove the oil pressure gauge.

(b) Apply adhesive to 2 or 3 threads of the oil pressure switch.

Adhesive:

Part No. 08833−00080, THREE BOND 1344, LOCTITE 242 or equivalent

(c) Using a 24 mm deep socket wrench, install the oil pressure switch.

Torque: 15 N·m (152 kgf·cm, 11 ft·lbf)

HINT:

Do not start the engine for 1 hour after installation.

(d) Connect the oil pressure switch connector.

8. START ENGINE AND CHECK FOR LEAKS

LU0Q9−01

REPLACEMENT

CAUTION:

- **Prolonged and repeated contact with engine oil will result in the removal of natural oils from the skin, leading to dryness, irritation and dermatitis. In addition, used engine oil contains potentially harmful contaminants which may cause skin cancer.**
- **Precautions should be taken when replacing engine oil to minimize the risk of contact with used engine oil. Protective clothing and gloves that cannot be penetrated by oil should be worn. The skin should be washed with soap and water, or use water−less hand cleaner, to remove any used engine oil thoroughly. Do not use gasoline, thinners, or solvents.**
- **In order to preserve the environment, used oil and used oil filters must be disposed of at designated disposal sites.**

1. DRAIN ENGINE OIL

(a) Remove the engine under cover seal No. 3.

(b) Remove the oil pan drain plug and drain the engine oil.

(c) Clean the oil pan drain plug and install it and a new gasket.

Torque: 40 N·m (408 kgf·cm, 30 ft·lbf)

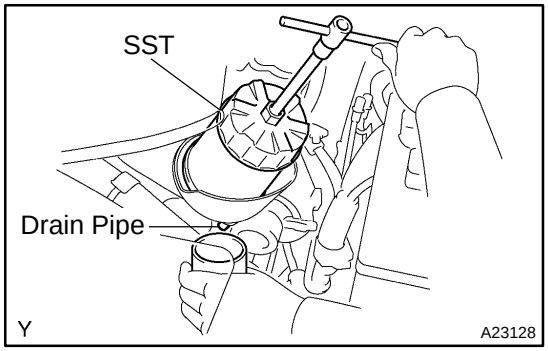

2. REMOVE OIL FILTER

When using a container:

(a) Remove the drain pipe cap.

(b) While removing the oil filter with SST, catch the oil from the oil filter with a container.

SST 09228−07501

(c) Install the drain pipe cap.

(d) Clean the oil catch plate.

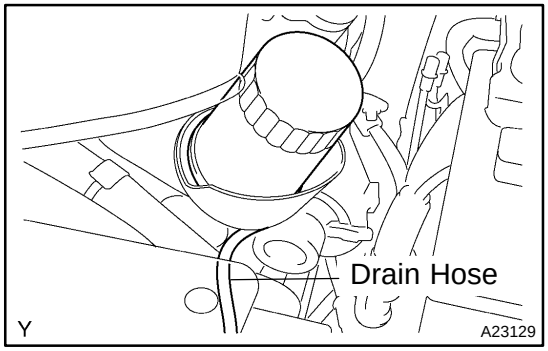

When using a drain hose:

(e) Remove the drain pipe cap.

(f) Connect a drain hose to the oil filter bracket.

HINT:

- Drain hose inside diameter: 8 mm (0.31 in.)
- Drain hose length: 900 mm (35.43 in.)

(g) Pass the drain hose down through the engine under cover, and put the drain oil container beneath the drain hose in order to catch the oil from the oil filter.

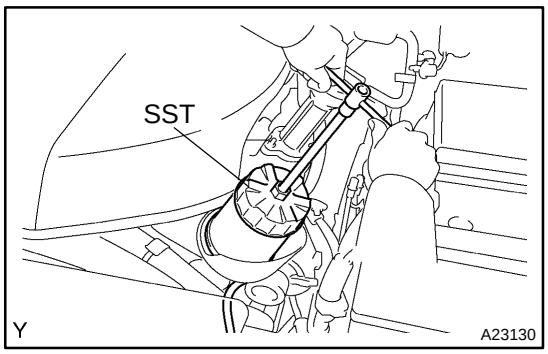

(h) Using SST, remove the oil filter.
SST 09228−07501
(i) Remove the drain hose and install the drain pipe cap.
(j) Clean the oil catch plate.

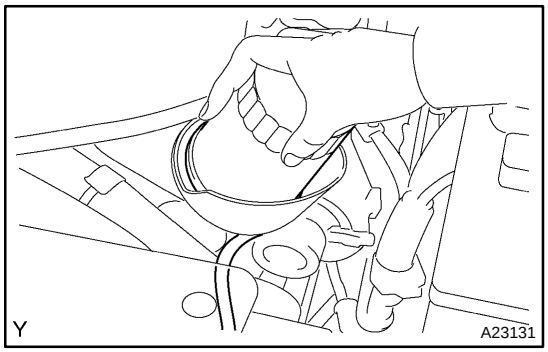

3. INSTALL OIL FILTER
(a) Clean the oil filter contact surface on the oil filter bracket.
(b) Lubricate the rubber gasket of a new oil filter with clean engine oil.
(c) Tighten the oil filter by hand until the rubber gasket contacts the seat of the filter bracket.

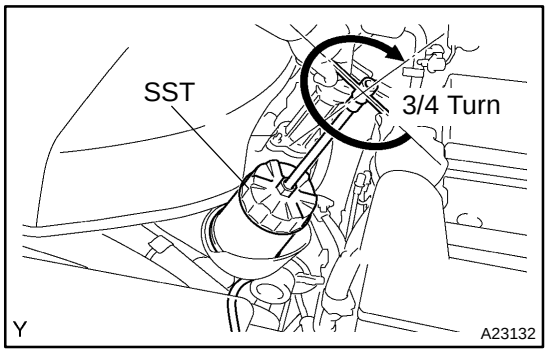

(d) Using SST, give it an additional 3/4 turn to set the filter.
SST 09228−07501

4. ADD ENGINE OIL
(a) Fill with new engine oil.
Capacity:
Drain and refill:
w/ Oil filter change: 4.5 liters (4.8 US qts, 4.0 lmp. qts)
w/o Oil filter change: 4.2 liters (4.4 US qts, 3.7 lmp. qts)
Dry fill: 5.6 liters (5.9 US qts, 4.9 lmp. qts)
(b) Reinstall the oil filler cap.

5. CHECK FOR ENGINE OIL LEAKS

6. CHECK ENGINE OIL LEVEL

OIL COOLER

COMPONENTS

LU0QF−01

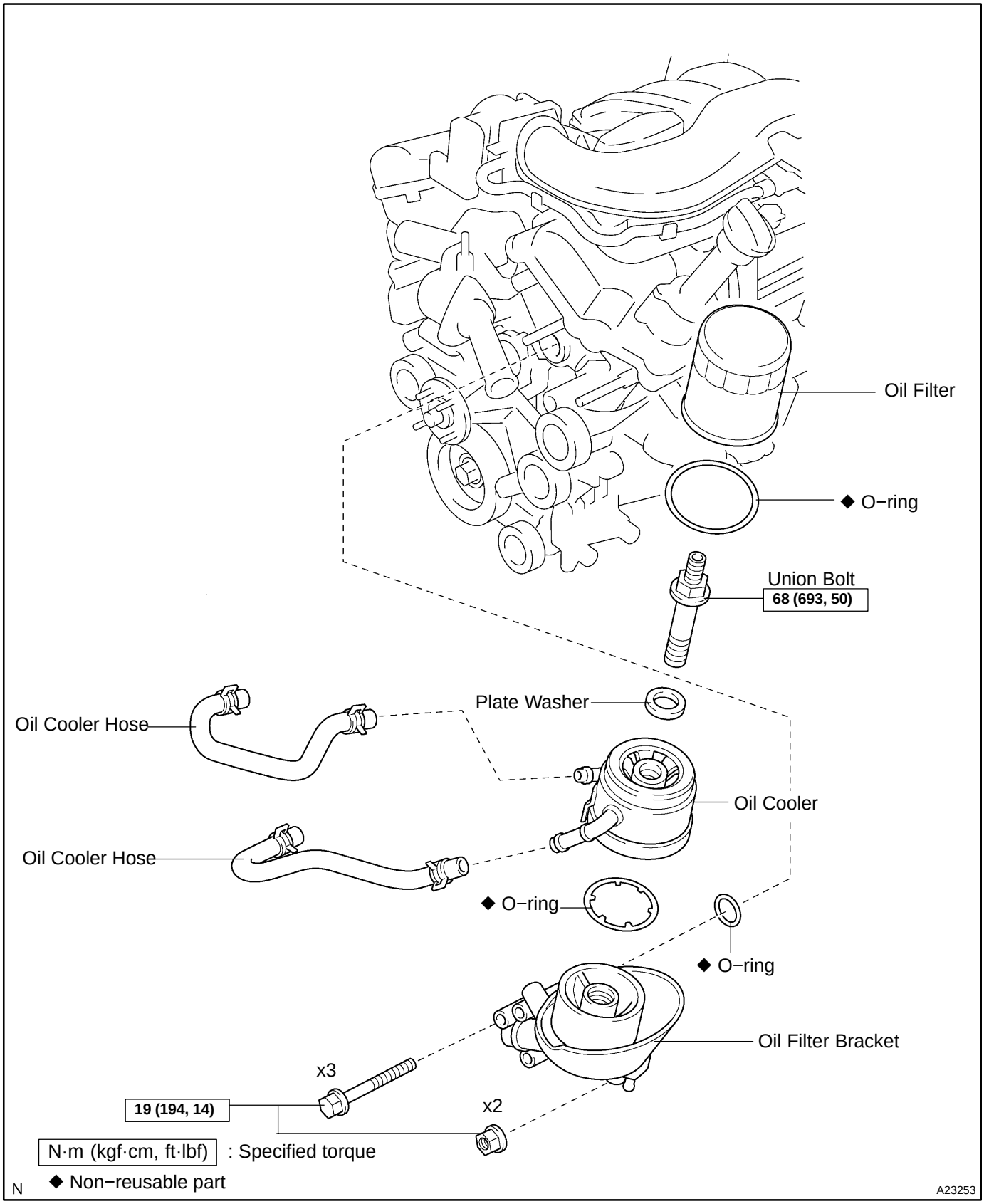

LU0QH−01

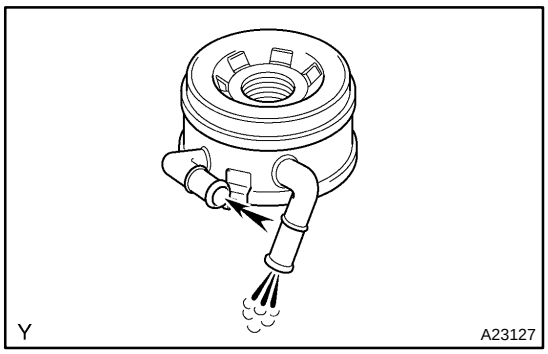

INSPECTION

INSPECT OIL COOLER

Check the oil cooler for damage or clogging.
If necessary, replace the oil cooler.

LU0QI−01

INSTALLATION

1. INSTALL OIL FILTER BRACKET

(a) Install a new O−ring and oil filter bracket with the 2 nuts and 3 bolts.
Torque: 19 N·m (194 kgf·cm, 14 ft·lbf)

(b) Connect the lower radiator hose.

2. INSTALL OIL COOLER

(a) Clean the contact surface of the oil filter bracket with the cooler mounting.

(b) Place a new O−ring on the oil cooler.

(c) Apply a light coat of engine oil to the threads of the union bolt.

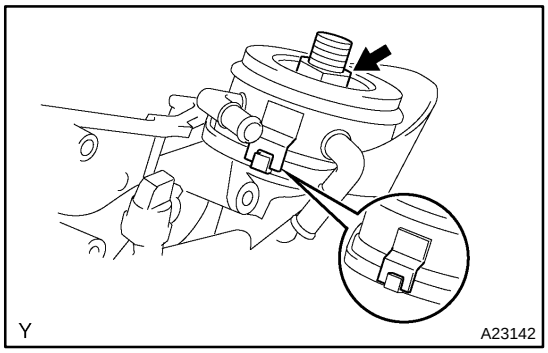

(d) Install the oil cooler and plate washer with the union bolt.
Torque: 68 N·m (693 kgf·cm, 50 ft·lbf)

(e) Connect the 2 oil cooler hoses to the oil cooler.

3. INSTALL OIL FILTER

4. ADD ENGINE COOLANT

5. ADD ENGINE OIL

6. INSTALL V−BANK COVER

LU0QG−01

REMOVAL

1. DRAIN ENGINE COOLANT

2. REMOVE OIL FILTER

3. REMOVE V−BANK COVER

4. REMOVE OIL COOLER

(a) Disconnect the 2 oil cooler hoses from the oil cooler.

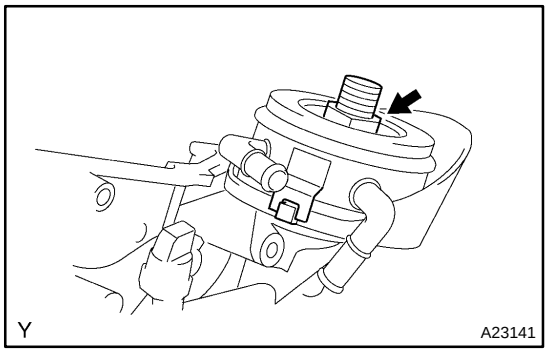

(b) Remove the union bolt, plate washer and oil cooler.

(c) Remove the O−ring from the oil cooler.

5. REMOVE OIL FILTER BRACKET

(a) Disconnect the lower radiator hose.

(b) Remove the 2 nuts, 3 bolts, oil filter bracket and O−ring.

OIL PUMP

COMPONENTS

LU0QA−01

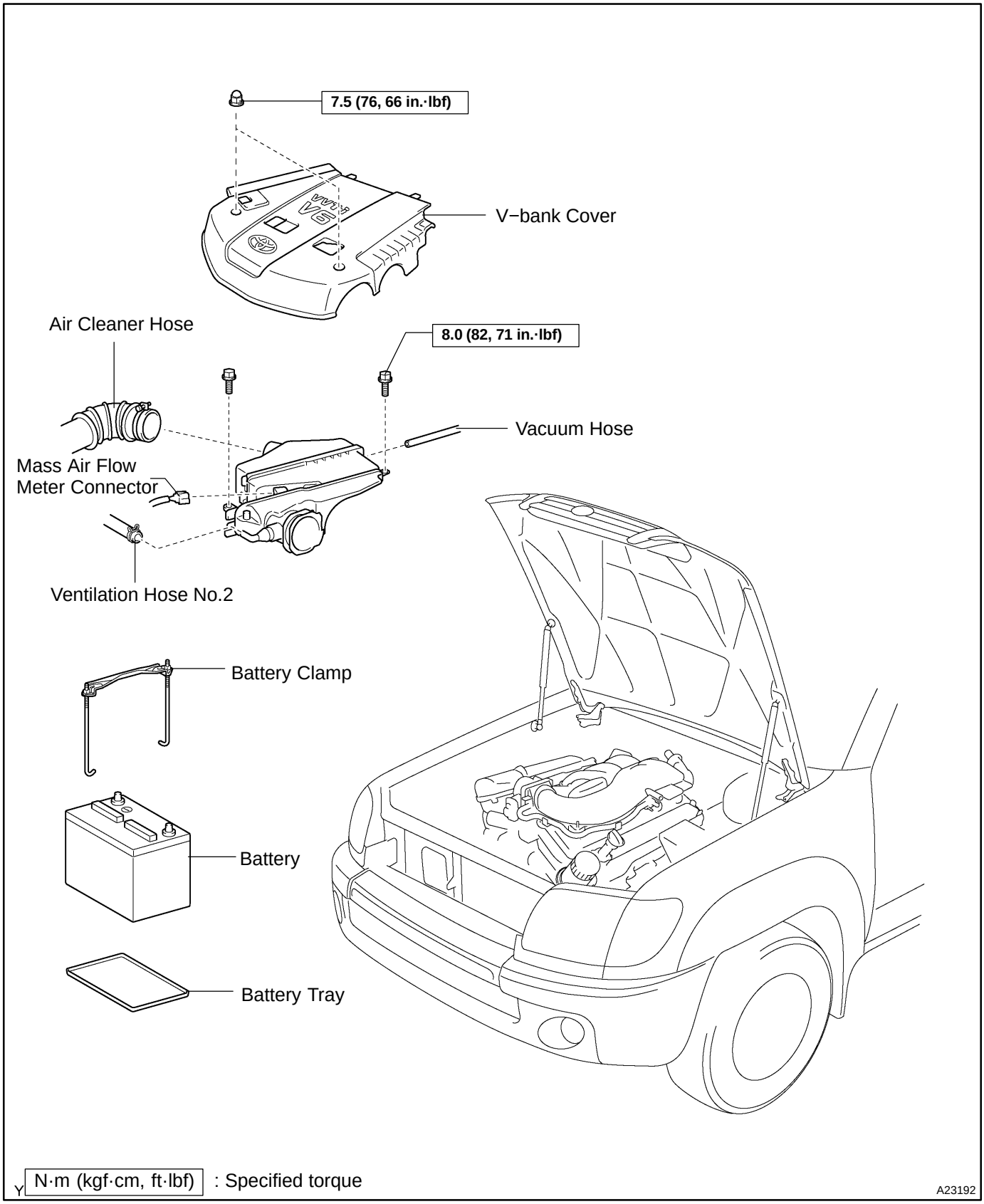

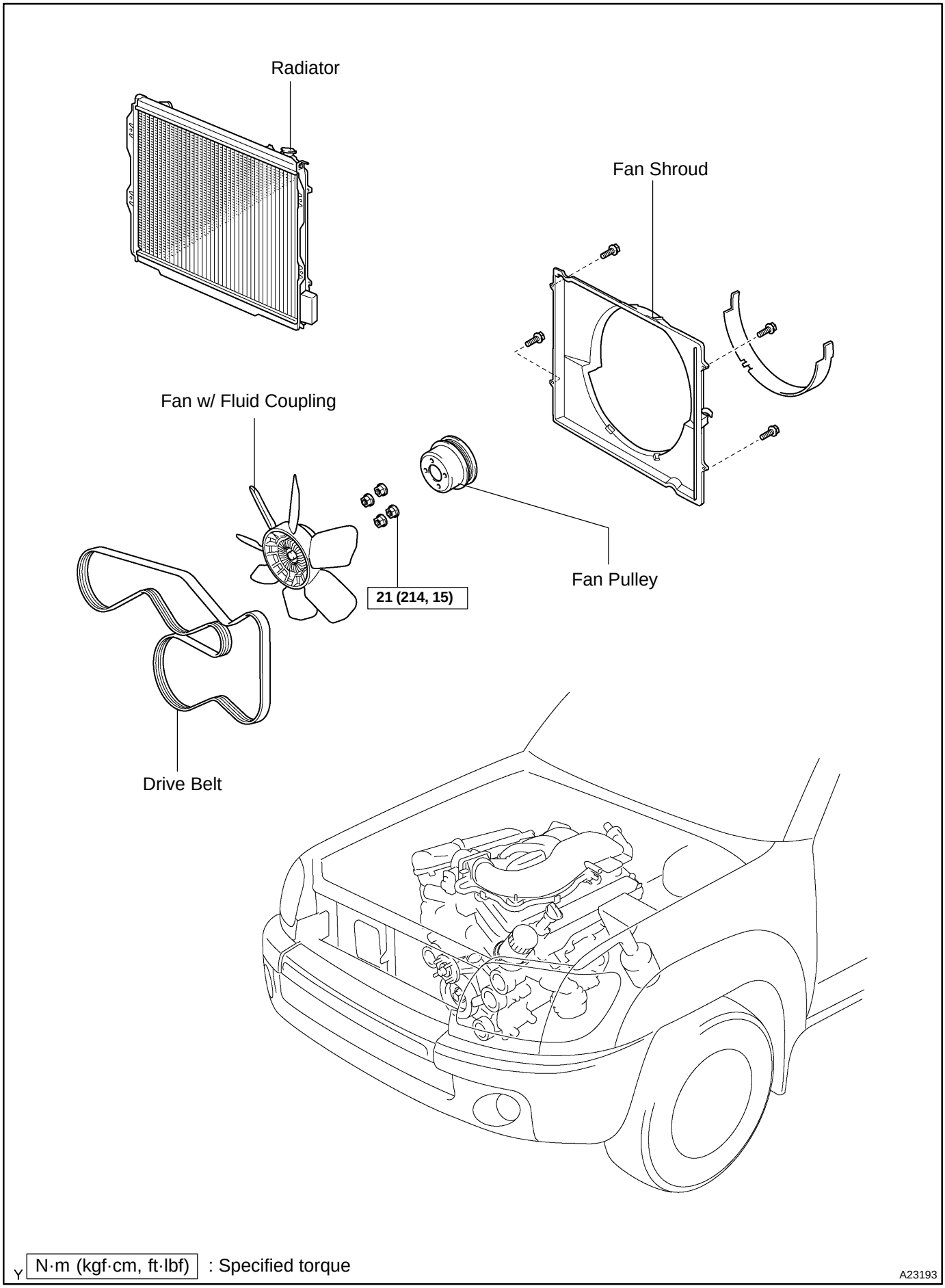
Radiator
Fan Shroud
Fan w/ Fluid Coupling
21 (214, 15)
Fan Pulley
Drive Belt
Y N·m (kgf·cm, ft·lbf) : Specified torque
A23193

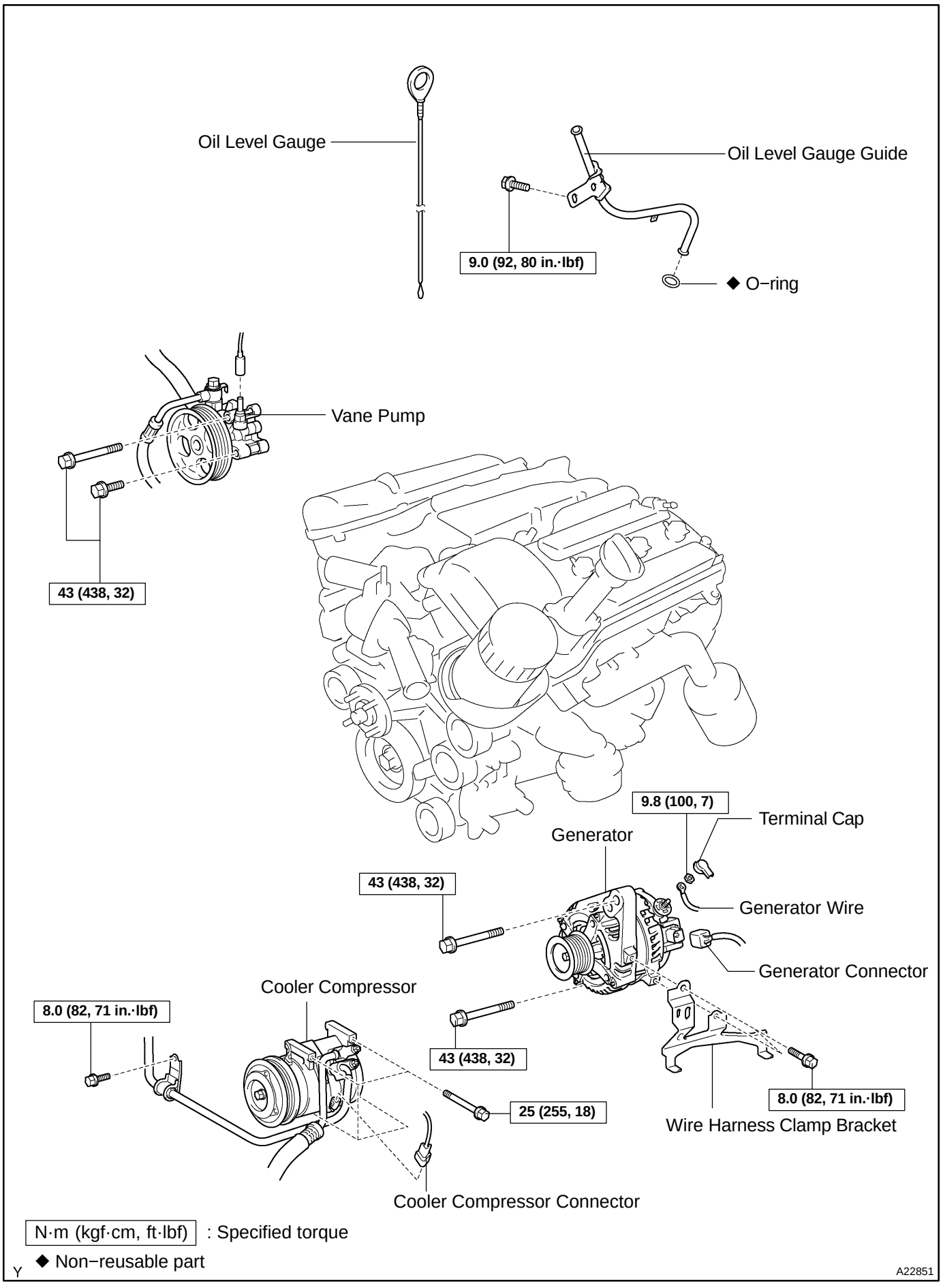
Oil Level Gauge
Oil Level Gauge Guide
9.0 (92, 80 in.·lbf)
◆ O−ring
Vane Pump
43 (438, 32)
9.8 (100, 7)
Terminal Cap
Generator
43 (438, 32)
Generator Wire
Generator Connector
Cooler Compressor
8.0 (82, 71 in.·lbf)
43 (438, 32)
25 (255, 18)
8.0 (82, 71 in.·lbf)
Wire Harness Clamp Bracket
Cooler Compressor Connector
N·m (kgf·cm, ft·lbf) : Specified torque
◆ Non−reusable part
Y
A22851

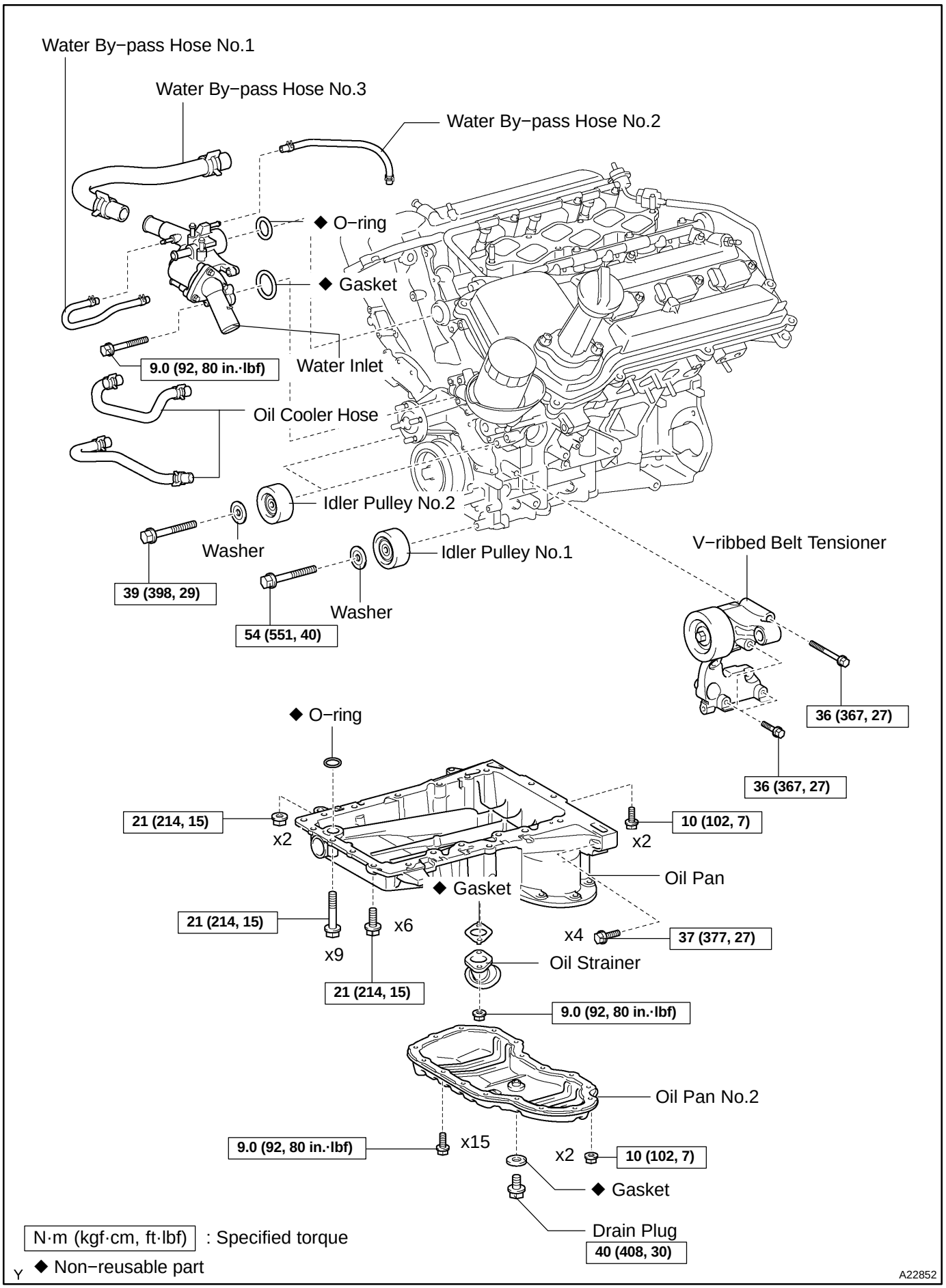
Water By−pass Hose No.1
Water By−pass Hose No.3
Water By−pass Hose No.2
◆ O−ring
◆ Gasket
9.0 (92, 80 in.·lbf)
Water Inlet
Oil Cooler Hose
Idler Pulley No.2
Washer
39 (398, 29)
Idler Pulley No.1
Washer
54 (551, 40)
V−ribbed Belt Tensioner
36 (367, 27)
36 (367, 27)
◆ O−ring
21 (214, 15)
x2
10 (102, 7)
x2
Oil Pan
◆ Gasket
21 (214, 15)
x6
x9
21 (214, 15)
x4
37 (377, 27)
Oil Strainer
9.0 (92, 80 in.·lbf)
Oil Pan No.2
9.0 (92, 80 in.·lbf)
x15
x2
10 (102, 7)
◆ Gasket
Drain Plug
40 (408, 30)
N·m (kgf·cm, ft·lbf) : Specified torque
◆ Non−reusable part
A22852

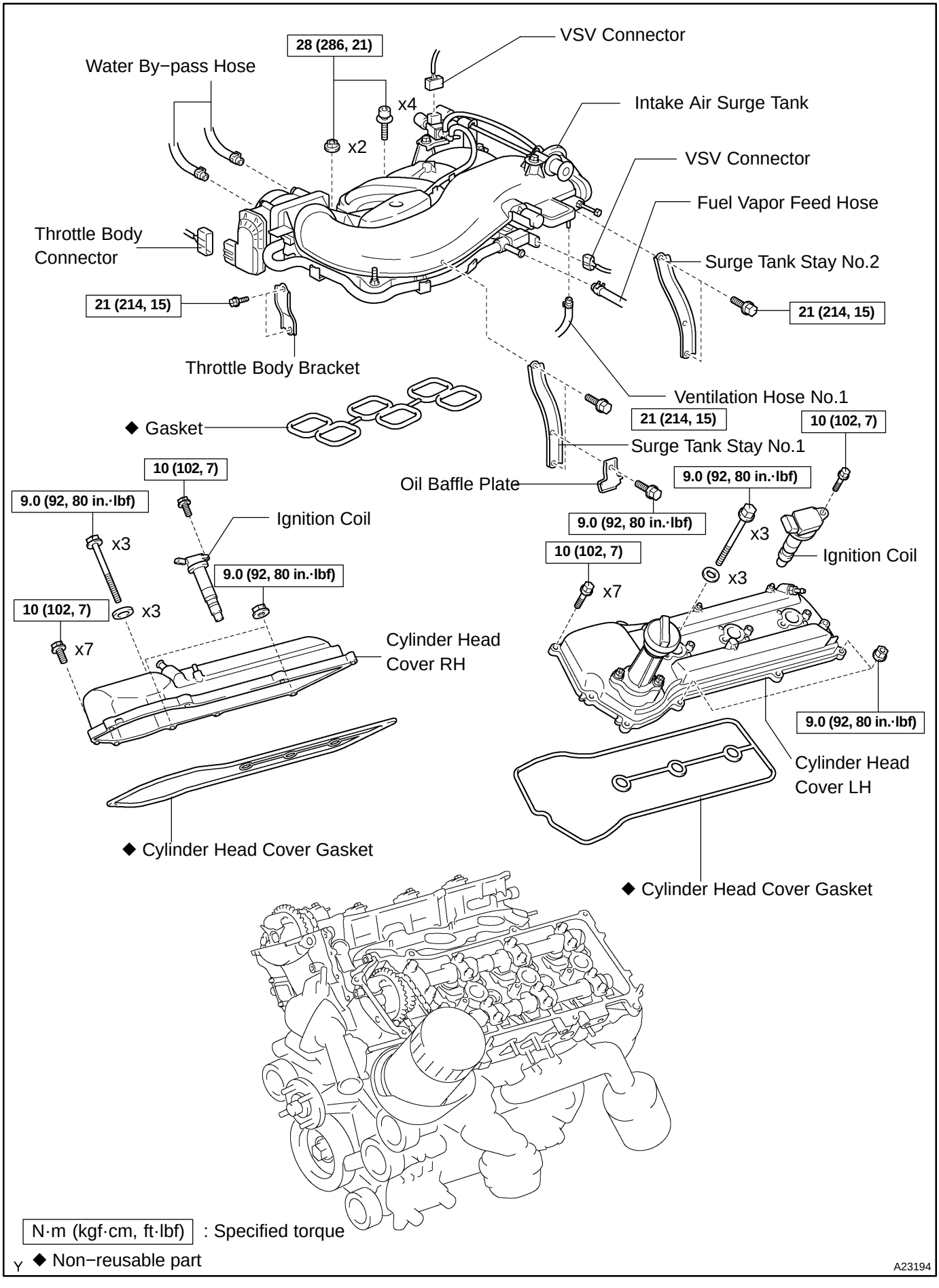
28 (286, 21)
VSV Connector
Water By−pass Hose
x4
Intake Air Surge Tank
x2
VSV Connector
Fuel Vapor Feed Hose
Throttle Body Connector
Surge Tank Stay No.2
21 (214, 15)
21 (214, 15)
Throttle Body Bracket
Ventilation Hose No.1
21 (214, 15)
10 (102, 7)
◆ Gasket
Surge Tank Stay No.1
Oil Baffle Plate
9.0 (92, 80 in.·lbf)
10 (102, 7)
9.0 (92, 80 in.·lbf)
9.0 (92, 80 in.·lbf)
x3
Ignition Coil
x3
10 (102, 7)
Ignition Coil
9.0 (92, 80 in.·lbf)
x3
10 (102, 7)
x7
x3
x7
Cylinder Head Cover RH
9.0 (92, 80 in.·lbf)
Cylinder Head Cover LH
◆ Cylinder Head Cover Gasket
◆ Cylinder Head Cover Gasket
N·m (kgf·cm, ft·lbf) : Specified torque
◆ Non−reusable part
A23194

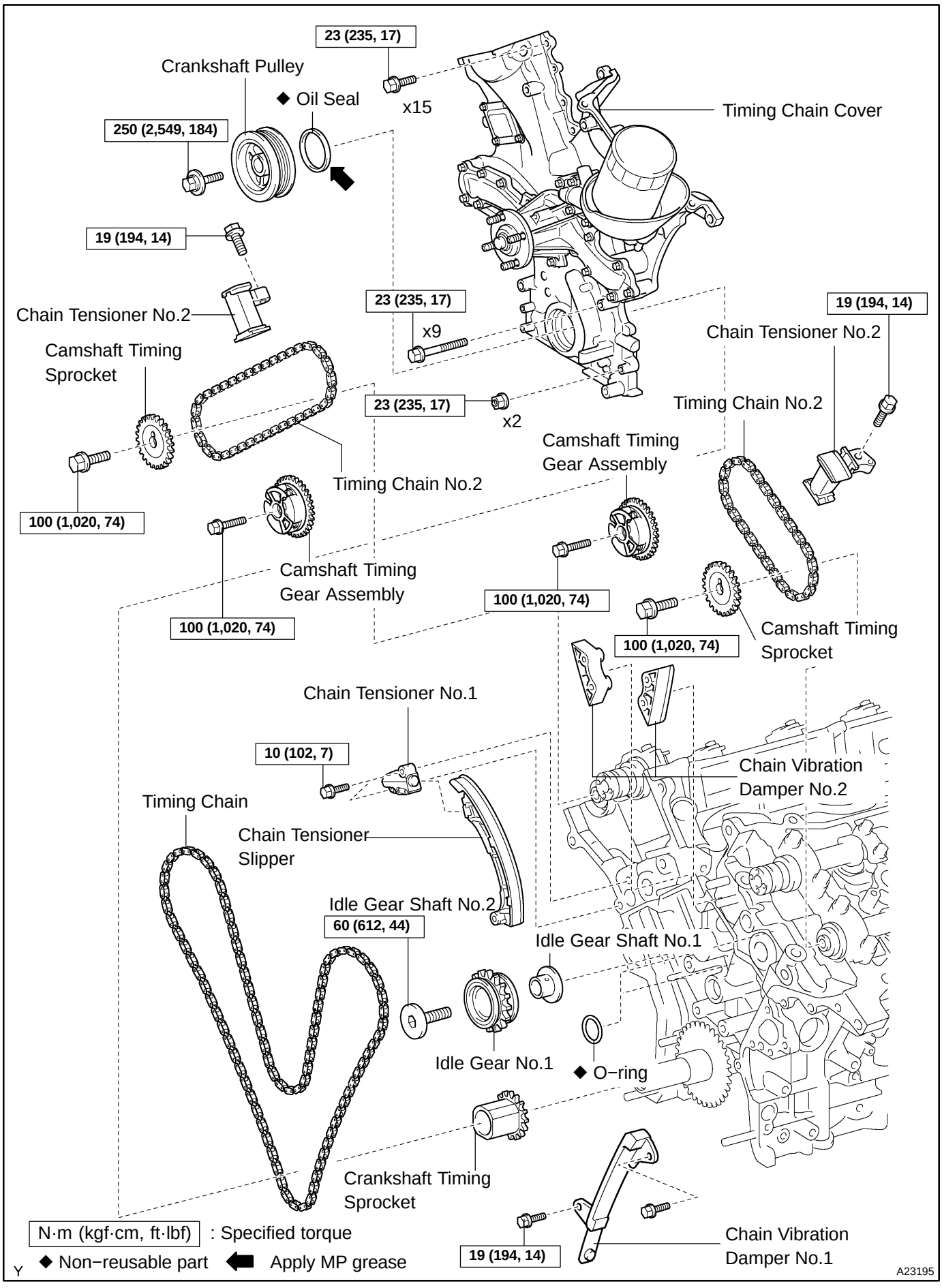
23 (235, 17)
Crankshaft Pulley
◆ Oil Seal
x15
Timing Chain Cover
250 (2,549, 184)
19 (194, 14)
Chain Tensioner No.2
23 (235, 17)
x9
19 (194, 14)
Chain Tensioner No.2
Camshaft Timing Sprocket
23 (235, 17)
x2
Timing Chain No.2
Camshaft Timing Gear Assembly
100 (1,020, 74)
Timing Chain No.2
Camshaft Timing Gear Assembly
100 (1,020, 74)
100 (1,020, 74)
100 (1,020, 74)
Camshaft Timing Sprocket
Chain Tensioner No.1
10 (102, 7)
Chain Vibration Damper No.2
Timing Chain
Chain Tensioner Slipper
Idle Gear Shaft No.2
60 (612, 44)
Idle Gear Shaft No.1
Idle Gear No.1
◆ O−ring
Crankshaft Timing Sprocket
19 (194, 14)
Chain Vibration Damper No.1
N·m (kgf·cm, ft·lbf) : Specified torque
◆ Non−reusable part
Apply MP grease
Y
A23195

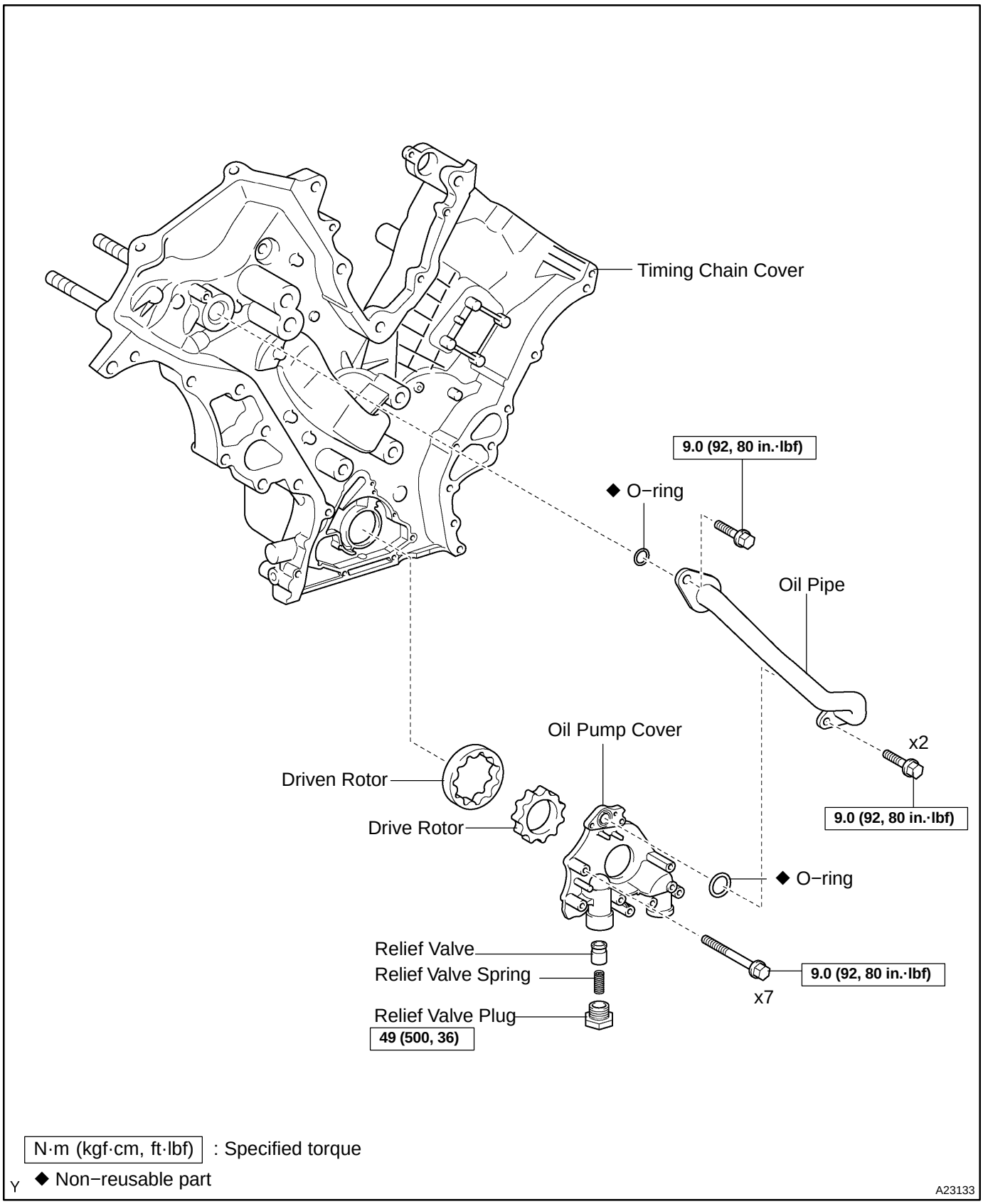
Timing Chain Cover
9.0 (92, 80 in.·lbf)
◆ O−ring
Oil Pipe
Oil Pump Cover
x2
9.0 (92, 80 in.·lbf)
Driven Rotor
Drive Rotor
◆ O−ring
Relief Valve
Relief Valve Spring
9.0 (92, 80 in.·lbf)
x7
Relief Valve Plug
49 (500, 36)
N·m (kgf·cm, ft·lbf) : Specified torque
◆ Non−reusable part
A23133

LU0QC−01

INSPECTION

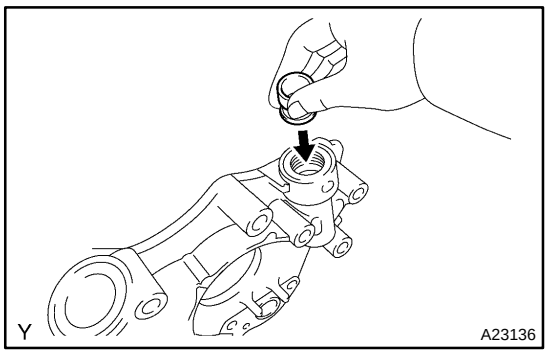

1. INSPECT OIL PUMP RELIEF VALVE

Coat the valve with engine oil and check that it falls smoothly into the valve hole by its own weight.

If it does not, replace the relief valve. If necessary, replace the oil pump assembly.

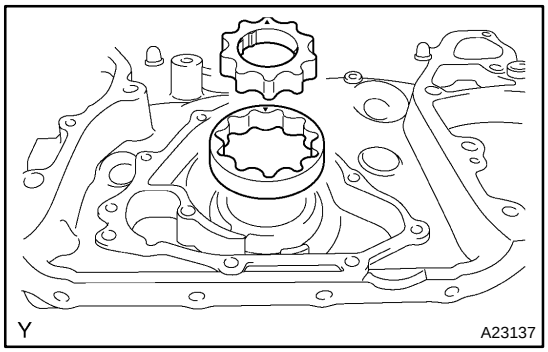

2. INSPECT OIL PUMP ROTOR SET

(a) Place the drive and driven rotors into the timing chain cover with the marks facing upward.

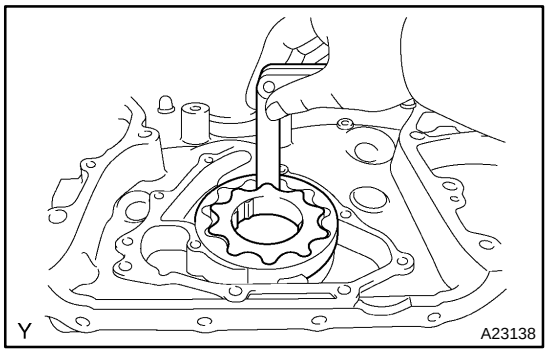

(b) Inspect rotor tip clearance.

Using a feeler gauge, measure the clearance between each drive and driven rotor tip.

Standard clearance:
0.06 to 0.16 mm (0.0024 to 0.0063 in.)
Maximum tip clearance: 0.16 mm (0.0063 in.)

If the clearance is greater than the maximum, replace the rotors as a set.

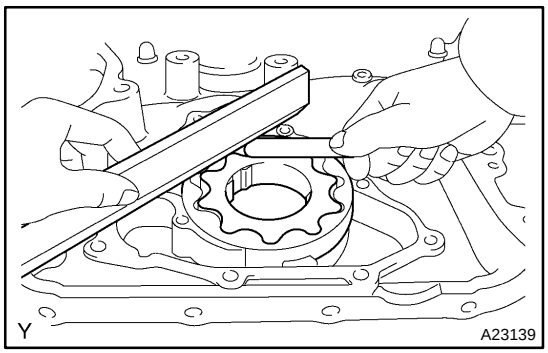

(c) Inspect rotor side clearance.

Using a feeler gauge and precision straight edge, measure the clearance between the rotors and the precision straight edge.

Standard clearance:
0.03 to 0.09 mm (0.0012 to 0.0035 in.)
Maximum side clearance: 0.09 mm (0.0035 in.)

If the clearance is greater than the maximum, replace the drive and driven rotors. If necessary, replace the timing chain cover assembly.

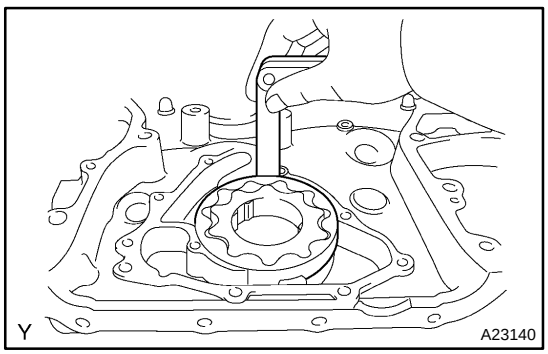

(d) Inspect rotor body clearance.

Using a feeler gauge, measure the clearance between the driven rotor and the body.

Standard clearance:
0.250 to 0.325 mm (0.0098 to 0.0128 in.)
Maximum body clearance: 0.325 mm (0.0128 in.)

If the clearance is greater than the maximum, replace the drive and driven rotors. If necessary, replace the timing chain cover assembly.

LU0QE−01

INSTALLATION

1. INSTALL OIL PUMP RELIEF VALVE

(a) Coat the relief valve with engine oil and insert the relief valve and spring into the valve hole.

(b) Install the relief valve plug.
Torque: 49 N·m (500 kgf·cm, 36 ft·lbf)

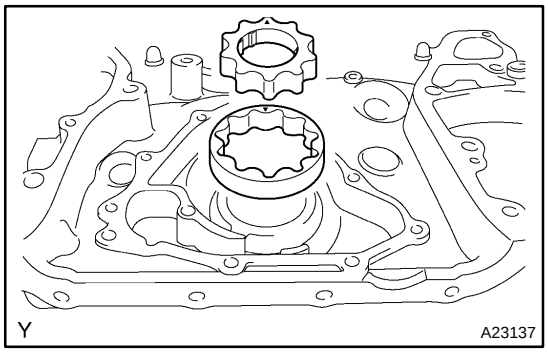

2. INSTALL OIL PUMP COVER

(a) Apply new engine oil to the drive and driven rotors.

(b) Place the drive and driven rotors into the timing chain cover with the marks facing upward.

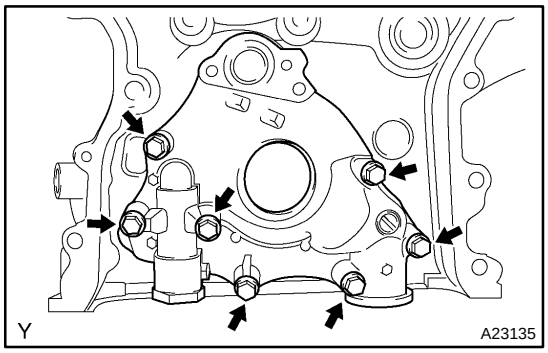

(c) Install the oil pump cover with the 7 bolts.
Torque: 9.0 N·m (92 kgf·cm, 80 in.·lbf)

(d) Install a new O−ring to the oil pump cover.

(e) Install a new O−ring to the oil pipe.

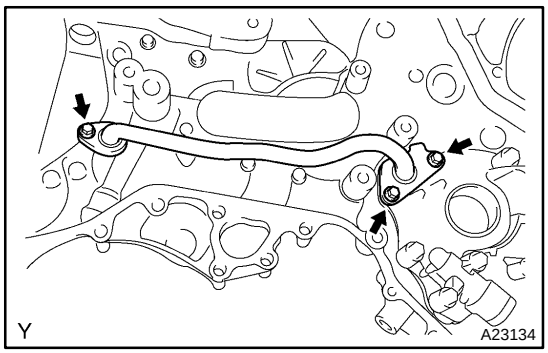

(f) Install the oil pipe with the 3 bolts.
Torque: 9.0 N·m (92 kgf·cm, 80 in.·lbf)

3. INSTALL TIMING CHAIN COVER (See page EM−44)

LU0QB−01

REMOVAL

1. REMOVE TIMING CHAIN COVER (See page EM−32)

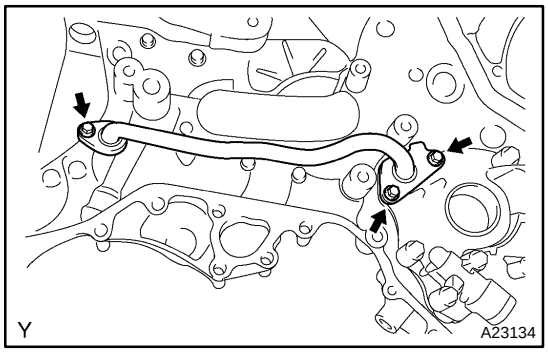

2. REMOVE OIL PUMP COVER

(a) Remove the 3 bolts and oil pipe.

(b) Remove the 2 O−rings.

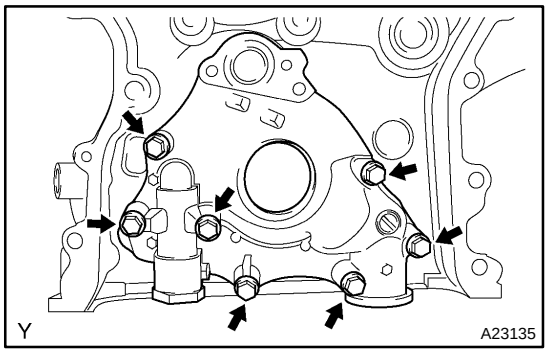

(c) Remove the 7 bolts, oil pump cover, drive rotor and driven rotor.

3. REMOVE OIL PUMP RELIEF VALVE

Remove the plug, spring and relief valve.

LU0QD−01

REPLACEMENT

REPLACE TIMING CHAIN COVER OIL SEAL

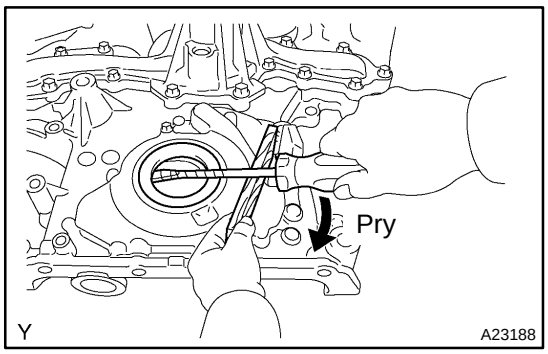

(a) Using a screwdriver, pry out the oil seal.

NOTICE:

Be careful not to damage the oil pump assembly. Wrap the tip of the screwdriver with tape.

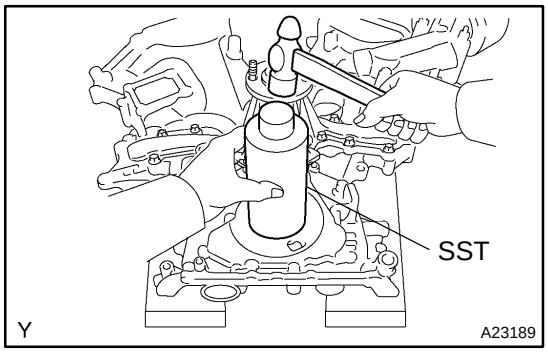

(b) Using SST and a hammer, tap in a new oil seal until its surface is flush with the timing chain cover edge.
SST 09226−10010

(c) Apply MP grease to the oil seal lip.

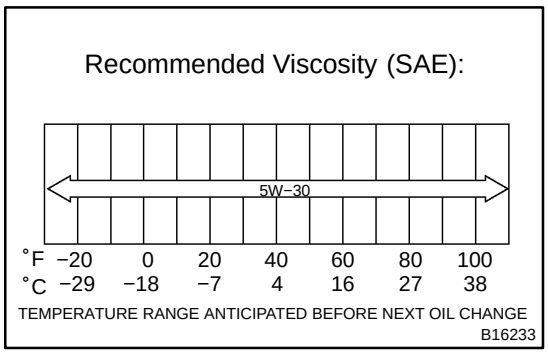

OIL AND FILTER

LU0GV−05

INSPECTION

1. CHECK ENGINE OIL QUALITY

Check the oil for deterioration, entry of water, discoloring or thinning.

If the quality is visibly poor, replace the oil.

Oil grade:

ILSAC multigrade engine oil.

2. CHECK ENGINE OIL LEVEL

The oil level should be between the ”L” and ”F” marks on the dipstick.

If low, check for leakage and add oil up to the ”F” mark.

NOTICE:

Do not fill with engine oil above the ”F” mark.

3. REMOVE ENGINE UNDER COVER

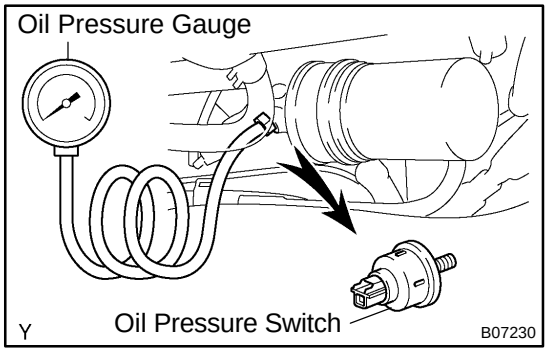

4. REMOVE OIL PRESSURE SWITCH

5. INSTALL OIL PRESSURE GAUGE

6. WARM UP ENGINE

Allow the engine to warm up to normal operating temperature.

7. CHECK OIL PRESSURE

Oil pressure:

At idle	29 kPa (0.3 kgf/cm^2, 4.2 psi) or more
At 3,000 rpm	294 − 588 kPa (3.0 − 6.0 kgf/cm^2, 43 − 85 psi)

8. REMOVE OIL PRESSURE GAUGE

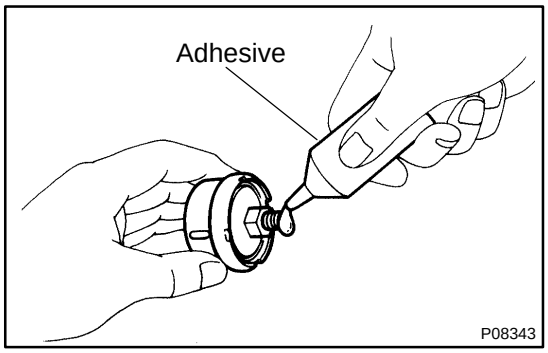

9. REINSTALL OIL PRESSURE SWITCH

(a) Apply adhesive to 2 or 3 threads of the oil pressure switch.

Adhesive:

Part No. 08833−00080, THREE BOND 1344, LOCTITE 242 or equivalent

(b) Reinstall the oil pressure switch.

10. START ENGINE, AND CHECK FOR ENGINE OIL LEAKS

11. REINSTALL ENGINE UNDER COVER

LU0GW−07

REPLACEMENT

CAUTION:

- **Prolonged and repeated contact with mineral oil will result in the removal of natural fats from the skin, leading to dryness, irritation and dermatitis. In addition, used engine oil contains potentially harmful contaminants which may cause skin cancer.**
- **Care should be taken, therefore, when changing engine oil to minimize the frequency and length of time your skin is exposed to used engine oil. Protective clothing and gloves that cannot be penetrated by oil should be worn. The skin should be thoroughly washed with soap and water, or use water−less hand cleaner, to remove any used engine oil. Do not use gasoline, thinners, or solvents.**
- **In order to preserve the environment, used oil and used oil filters must be disposed of only at designated disposal sites.**

1. w/ Oil filter change:
REMOVE ENGINE UNDER COVER

2. DRAIN ENGINE OIL

(a) Remove the oil filler cap.

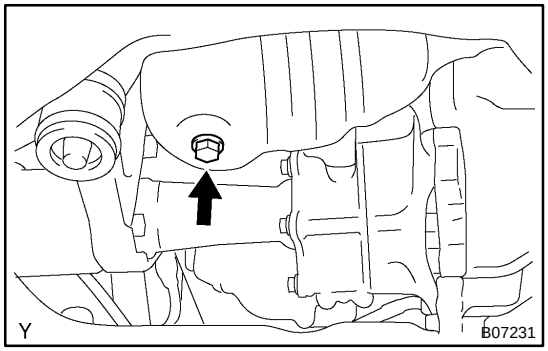

(b) Remove the oil drain plug and gasket, and drain the oil into a container.

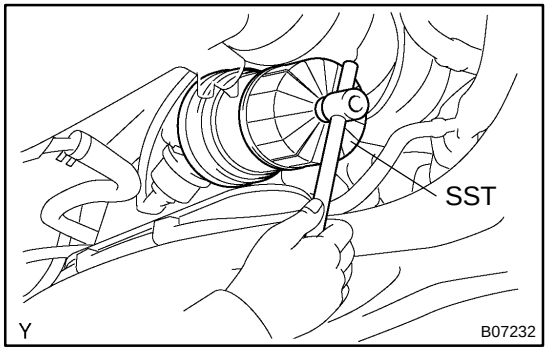

3. REPLACE OIL FILTER

(a) Using SST, remove the oil filter.
SST 09228−07501

(b) Clean the oil filter contact surface on the oil filter mounting.

(c) Lubricate the filter rubber gasket with clean engine oil.

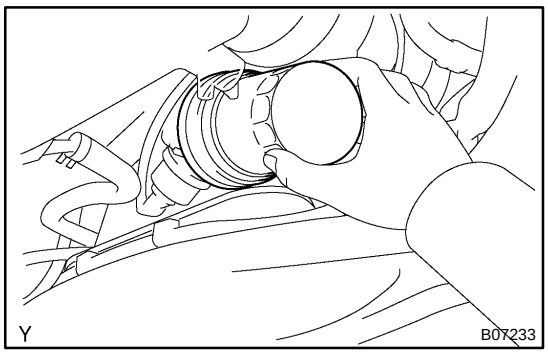

(d) Tighten the oil filter by hand until the rubber gasket contacts the seat of the filter mounting.

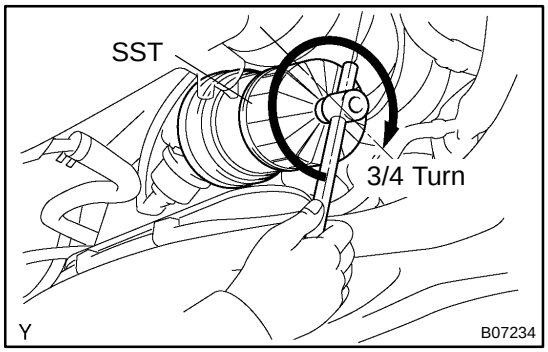

(e) Using SST, give it an additional 3/4 turn to seat the filter.
SST 09228−07501

4. REFILL WITH ENGINE OIL

(a) Clean and install the oil drain plug with a new gasket.
Torque: 39 N·m (400 kgf·cm, 29 ft·lbf)

(b) Fill with fresh engine oil.
Capacity:

Drain and refill	w/ Oil filter change	6.2 liters (6.6 Us qts, 5.5 Imp. qts)
	w/o Oil filter change	5.7 liters (6.0 Us qts, 5.0 Imp. qts)
Dry fill		7.1 liters (7.5 Us qts, 6.2 Imp. qts)

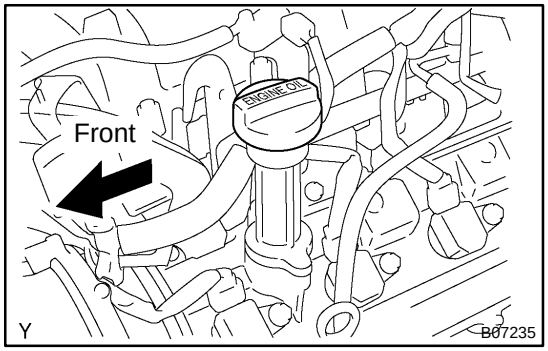

(c) Reinstall the oil filler cap.

HINT:
Install the oil filler cap facing the direction as shown in the illustration.

5. START ENGINE AND CHECK FOR ENGINE OIL LEAKS

6. RECHECK ENGINE OIL LEVEL

7. w/ Oil filter change:
REINSTALL ENGINE UNDER COVER

OIL COOLER

COMPONENTS

LU08W−10

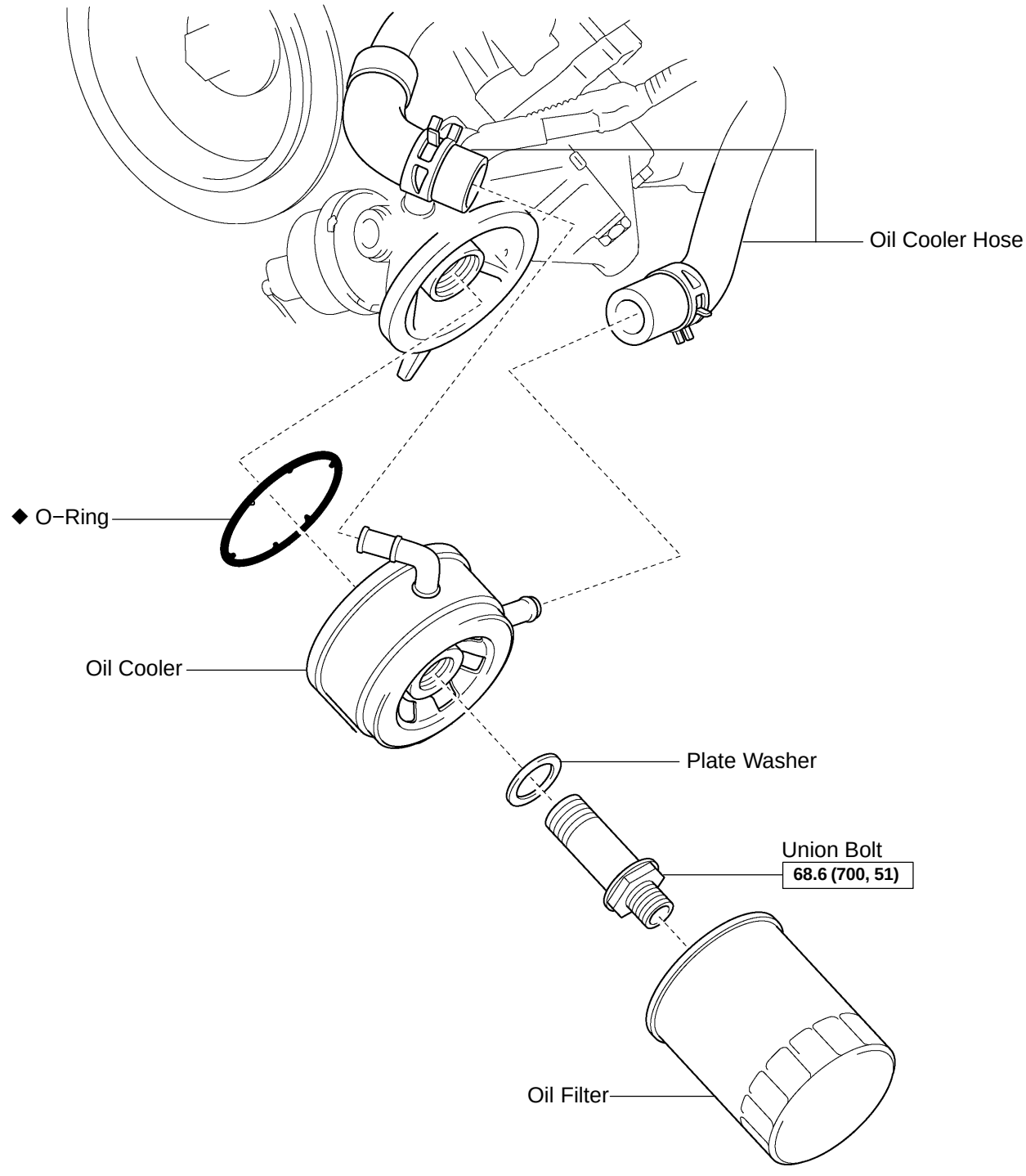

N·m (kgf·cm, ft·lbf): Specified torque
◆ Non−reusable part

B07331

LU08Y−08

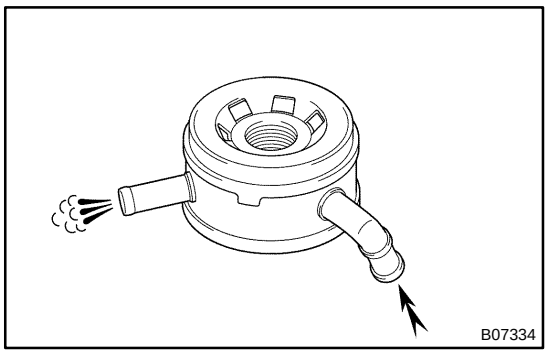

INSPECTION

INSPECT OIL COOLER

Check the oil cooler for damage or clogging.
If necessary, replace the oil cooler.

LU08Z−11

INSTALLATION

1. INSTALL OIL COOLER

(a) Clean the oil cooler contact surface on the cooler mounting.

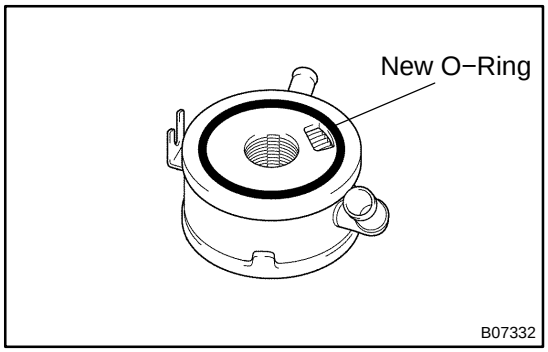

(b) Place a new O−ring to the oil cooler.

(c) Apply a light coat of engine oil on the threads and under the head of the union bolt.

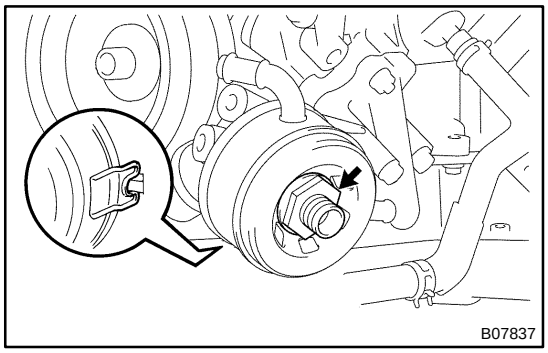

(d) Install the oil cooler and plate washer with the union bolt.
Torque: 68.6 N·m (700 kgf·cm, 51 ft·lbf)

(e) Connect the 2 oil cooler hoses to the oil cooler.

2. INSTALL OIL FILTER (See page LU−2)

3. FILL WITH ENGINE COOLANT

4. START ENGINE AND CHECK FOR ENGINE OIL LEAKS

5. CHECK ENGINE OIL LEVEL

LU08X−09

REMOVAL

1. DRAIN ENGINE COOLANT

2. REMOVE OIL FILTER (See page LU−2)

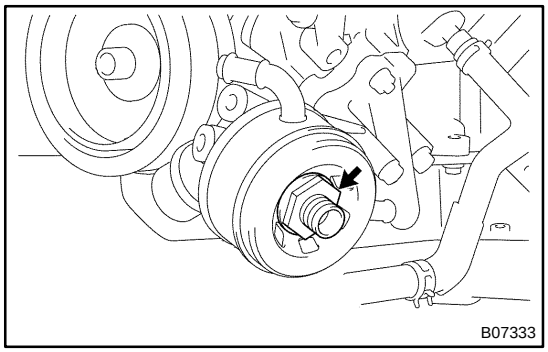

3. REMOVE OIL COOLER

(a) Disconnect the 2 oil cooler hoses from the oil cooler.

(b) Remove the union bolt, plate washer and oil cooler.

(c) Remove the O−ring from the oil cooler.

OIL NOZZLE

COMPONENTS

LU0IH−08

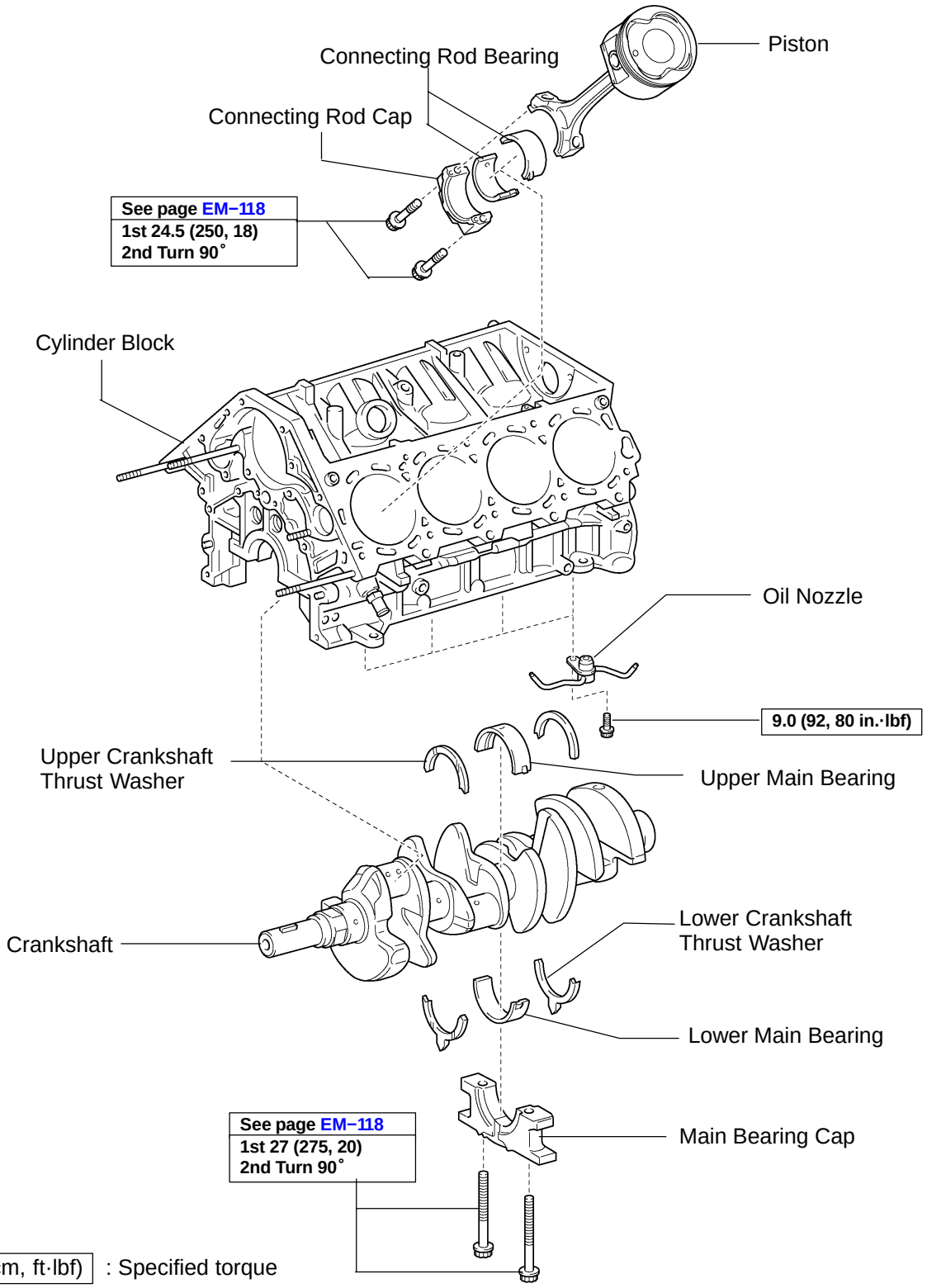

LU0IE−05

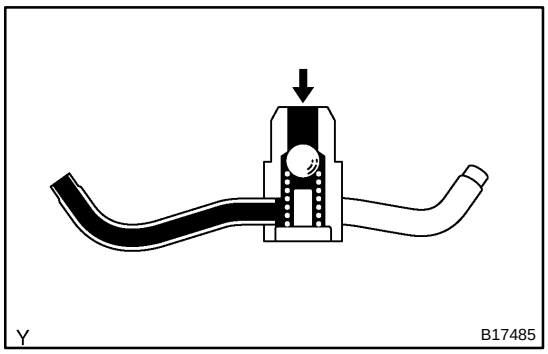

INSPECTION

INSPECT RELIEF VALVE (OIL NOZZLE)

Push the valve with a wooden stick to check if it is stuck.
If stuck, replace the relief valve.

LU0IF−07

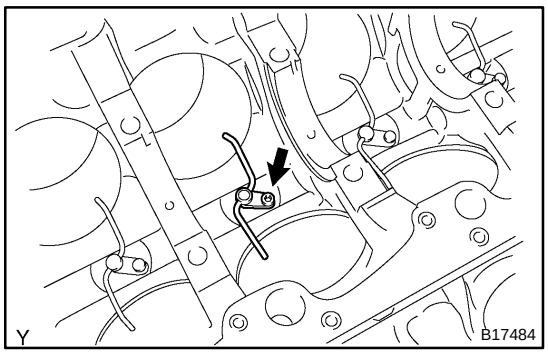

INSTALLATION

1. INSTALL OIL NOZZLE (WITH RELIEF VALVE)

Using a 5 mm hexagon wrench, install the oil nozzle with the bolt.

Torque: 9.0 N·m (92 kgf·cm, 80 in.·lbf)

2. INSTALL CRANKSHAFT (See page EM−118)

LU0ID−07

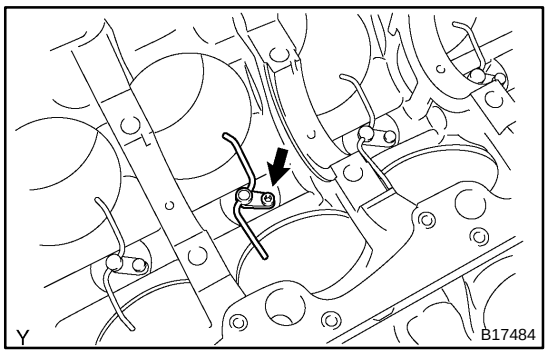

REMOVAL

1. REMOVE CRANKSHAFT (See page EM−100)

2. REMOVE OIL NOZZLE (WITH RELIEF VALVE)

Using a 5 mm hexagon wrench, remove the bolt and oil nozzle.

OIL PUMP

COMPONENTS

LU08P−09

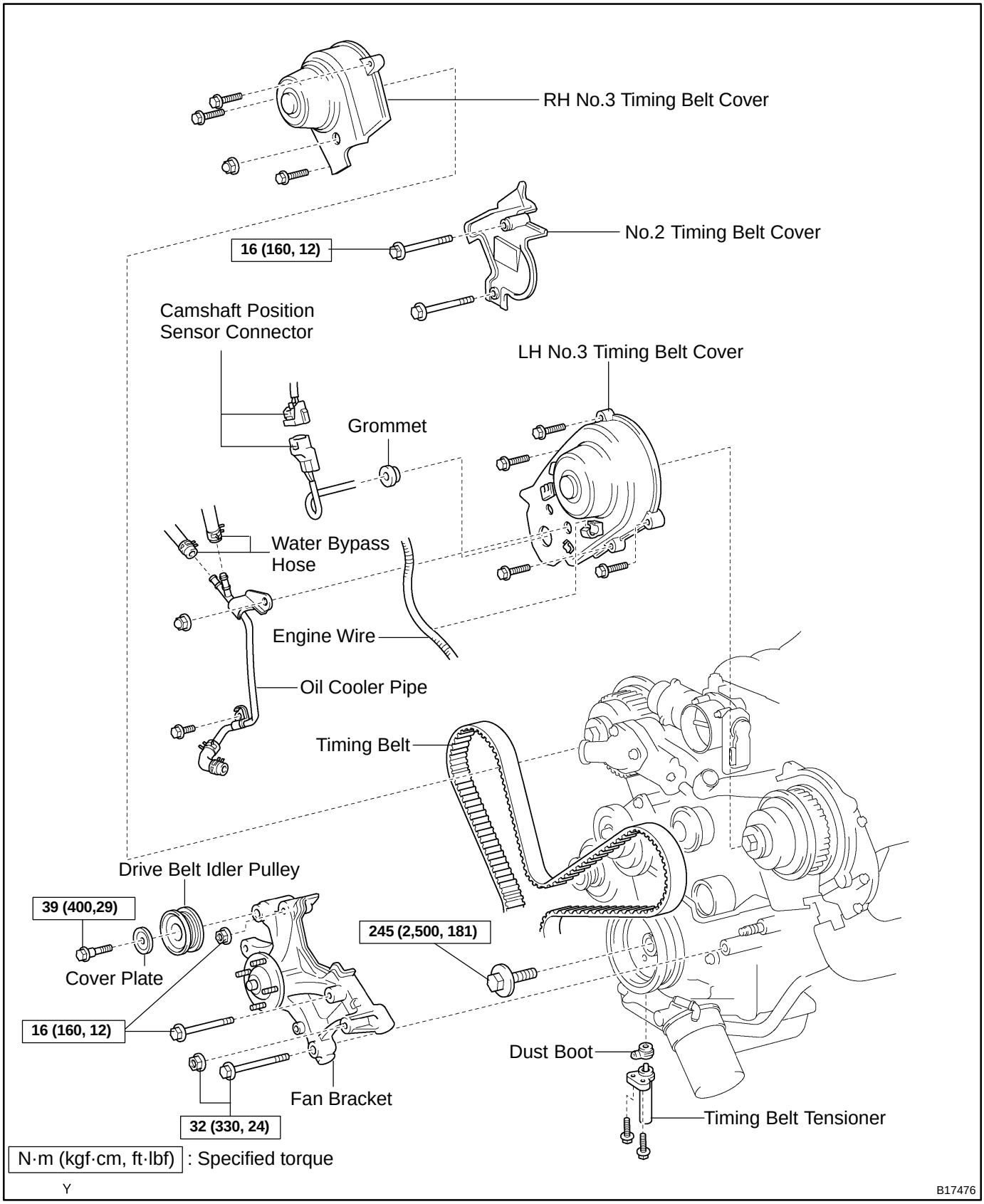

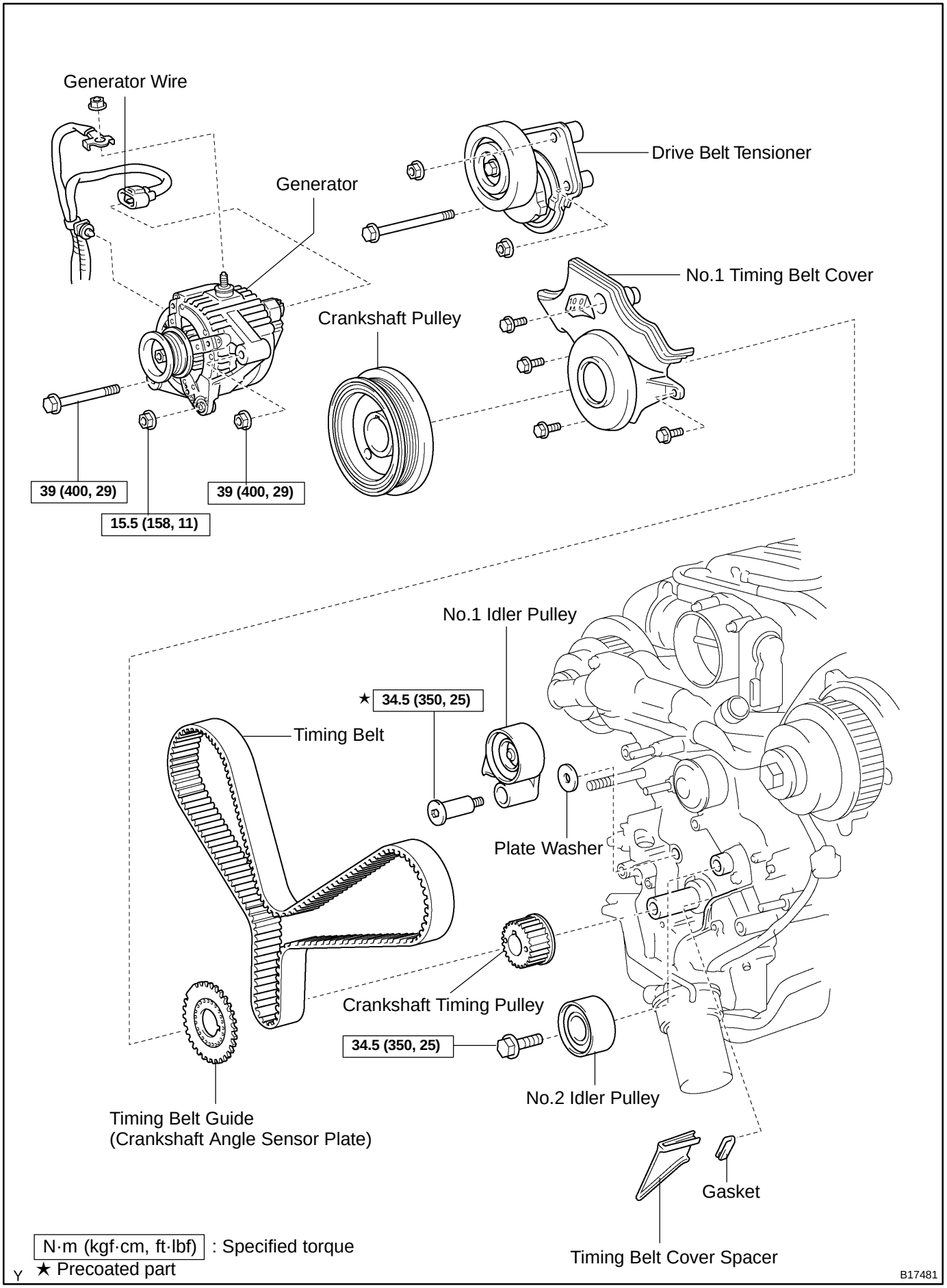
Generator Wire
Generator
Drive Belt Tensioner
No.1 Timing Belt Cover
Crankshaft Pulley
39 (400, 29)
39 (400, 29)
15.5 (158, 11)
No.1 Idler Pulley
★ 34.5 (350, 25)
Timing Belt
Plate Washer
Crankshaft Timing Pulley
34.5 (350, 25)
No.2 Idler Pulley
Timing Belt Guide
(Crankshaft Angle Sensor Plate)
Gasket
Timing Belt Cover Spacer
N·m (kgf·cm, ft·lbf) : Specified torque
★ Precoated part
Y
B17481

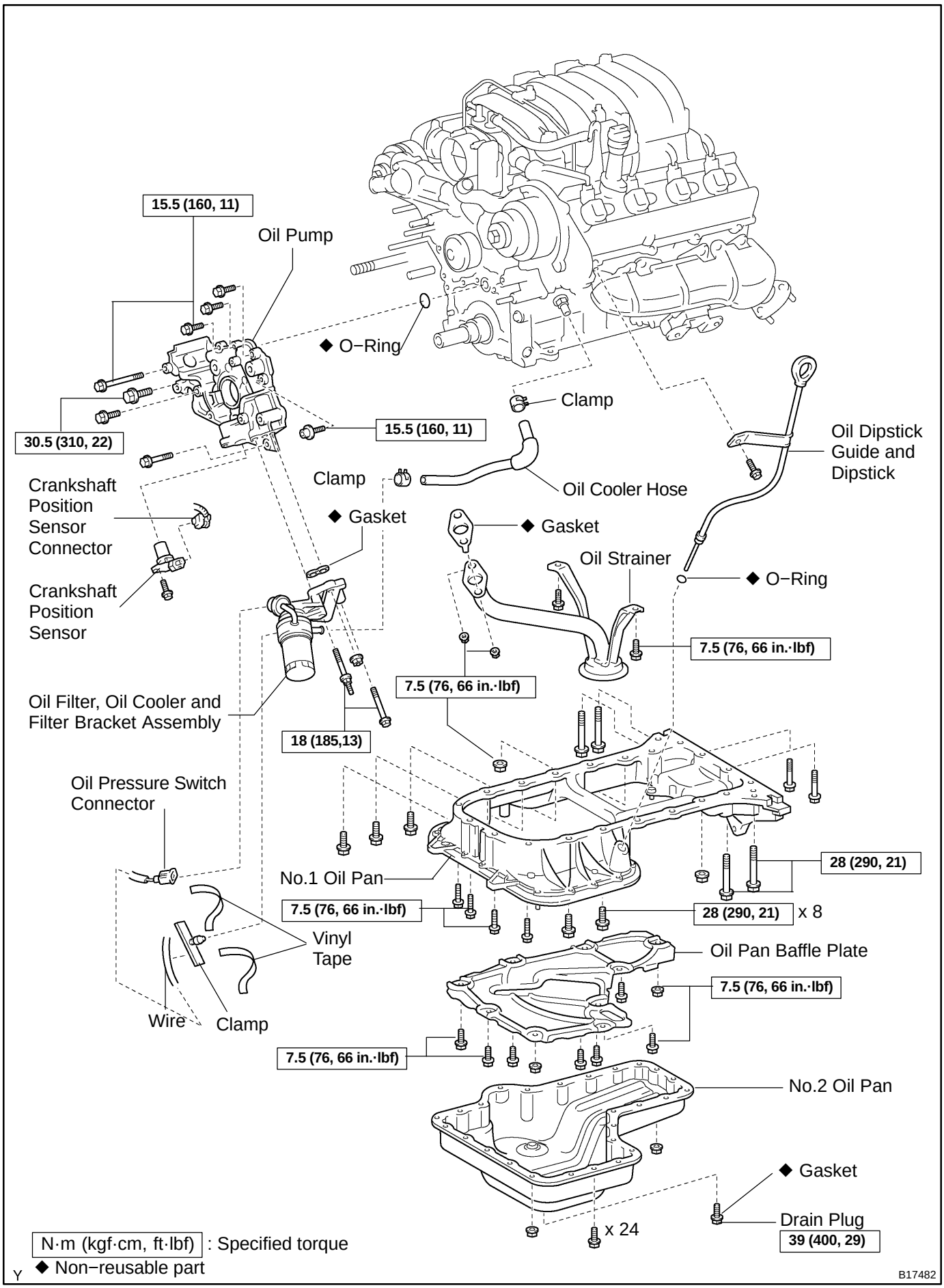
15.5 (160, 11)
Oil Pump
◆ O−Ring
30.5 (310, 22)
15.5 (160, 11)
Clamp
Oil Dipstick Guide and Dipstick
Clamp
Oil Cooler Hose
Crankshaft Position Sensor Connector
◆ Gasket
◆ Gasket
Oil Strainer
◆ O−Ring
Crankshaft Position Sensor
7.5 (76, 66 in.·lbf)
7.5 (76, 66 in.·lbf)
Oil Filter, Oil Cooler and Filter Bracket Assembly
18 (185,13)
Oil Pressure Switch Connector
28 (290, 21)
No.1 Oil Pan
7.5 (76, 66 in.·lbf)
28 (290, 21) x 8
Vinyl Tape
Oil Pan Baffle Plate
7.5 (76, 66 in.·lbf)
Wire
Clamp
7.5 (76, 66 in.·lbf)
No.2 Oil Pan
◆ Gasket
Drain Plug
x 24
39 (400, 29)
N·m (kgf·cm, ft·lbf) : Specified torque
◆ Non−reusable part
Y
B17482

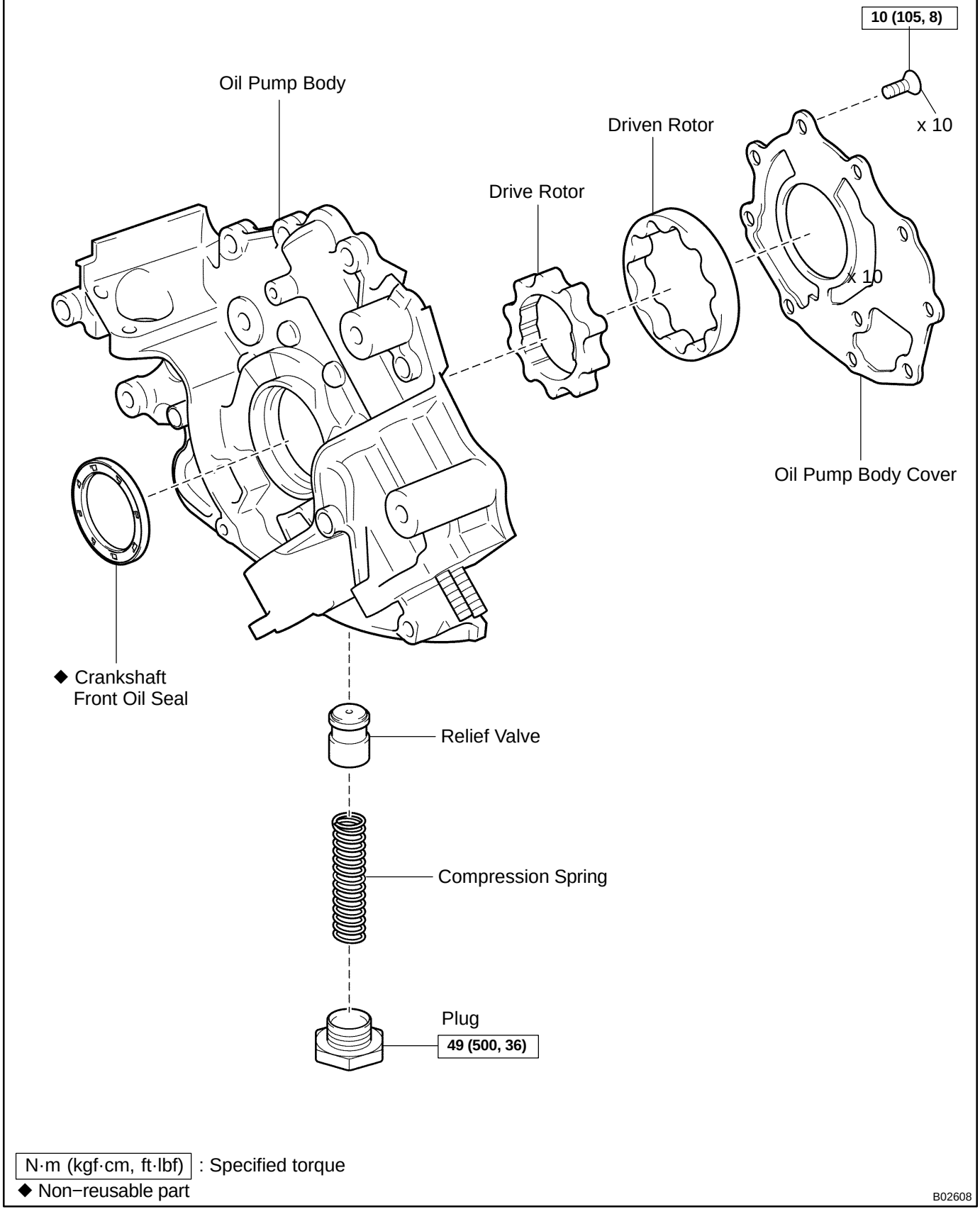

N·m (kgf·cm, ft·lbf) : Specified torque
◆ Non−reusable part

B02608

LU08R−09

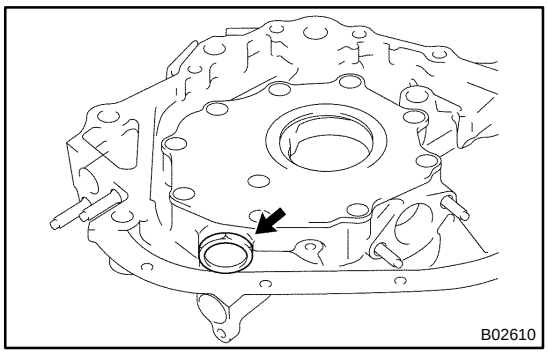

DISASSEMBLY

1. REMOVE RELIEF VALVE

Remove the plug, compression spring and relief valve.

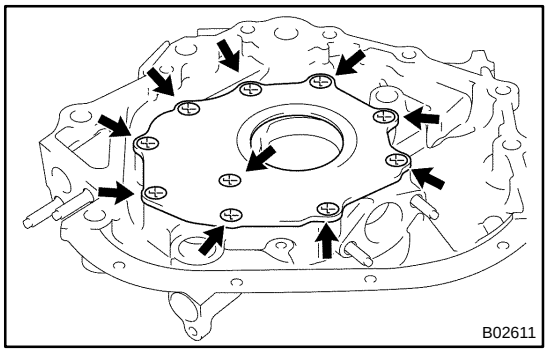

2. REMOVE DRIVE AND DRIVEN ROTORS

Remove the 10 screws, pump body cover, the drive and driven rotors.

LU08S−08

INSPECTION

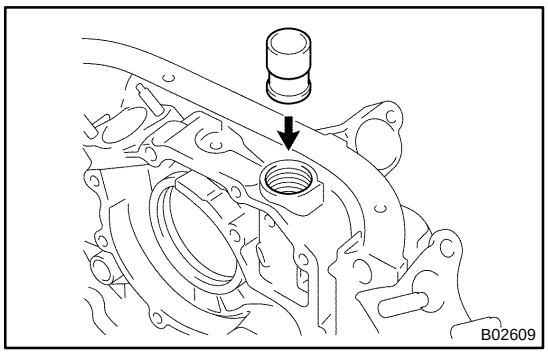

1. INSPECT RELIEF VALVE

Coat the valve with engine oil and check that it falls smoothly into the valve hole by its own weight.

If it doesn't, replace the relief valve. If necessary, replace the oil pump assembly.

2. INSPECT DRIVE AND DRIVEN ROTORS

(a) Place the drive and driven rotors into the oil pump body. (see page LU−14)

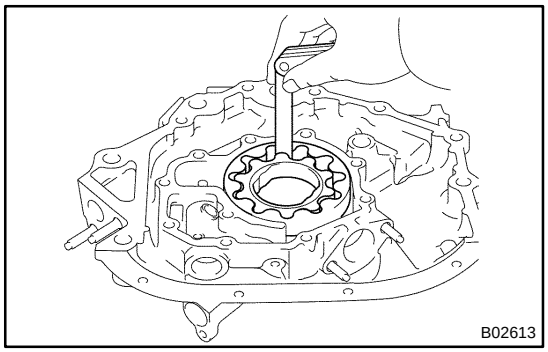

(b) Inspect the rotors for the body clearance.

Using a feeler gauge, measure the clearance between the drive and driven rotor tips.

Standard tip clearance:
0.060 to 0.180 mm (0.0024 to 0.0071 in.)
Maximum tip clearance: 0.18 mm (0.0071 in.)

If the tip clearance is greater than maximum, replace the rotors as a set.

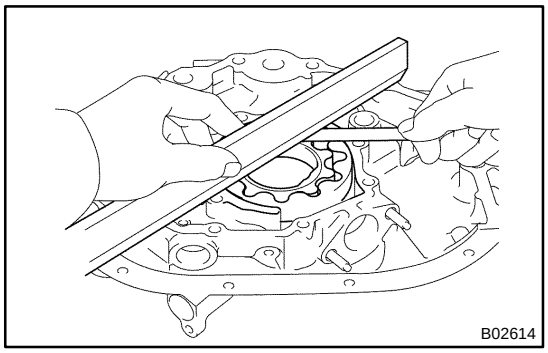

(c) Inspect the rotors for the side clearance.

Using a feeler gauge and precision straight edge, measure the clearance between the rotors and precision straight edge.

Side clearance:
0.030 to 0.090 mm (0.0012 to 0.0035 in.)
Maximum body clearance: 0.09 mm (0.0035 in.)

If the side clearance is greater than maximum, replace the rotors as a set. If necessary, replace the oil pump assembly.

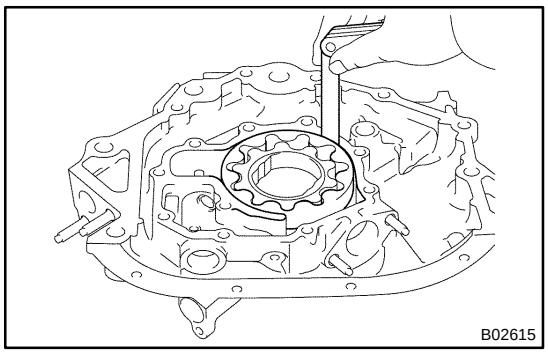

(d) Inspect the rotor for the body clearance.

Using a feeler gauge, measure the clearance between the driven rotor and body.

Standard body clearance:
0.250 to 0.325 mm (0.0098 to 0.0128 in.)
Maximum body clearance: 0.325 mm (0.0128 in.)

If the body clearance is greater than maximum, replace the rotors as a set. If necessary, replace the oil pump assembly.

(e) Remove the drive and drive rotors.

LU0GY−07

INSTALLATION

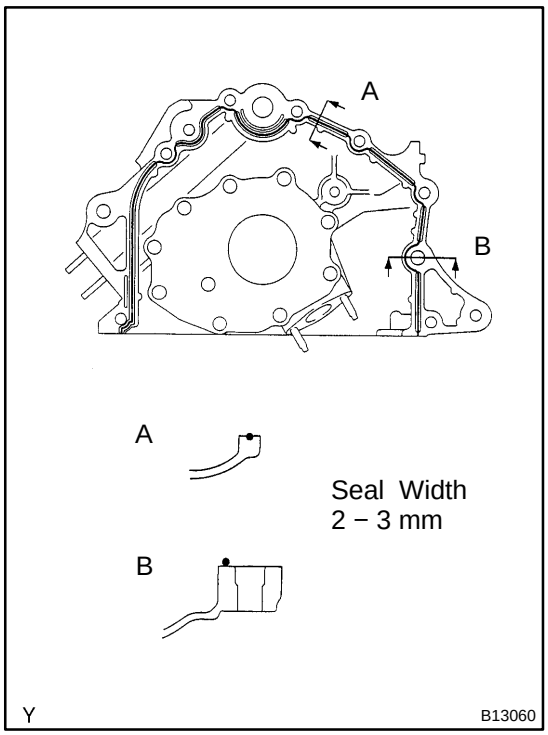

1. INSTALL OIL PUMP

(a) Remove any old packing (FIPG) material and be careful not to drop any oil on the contact surfaces of the oil pump and cylinder block.

- Using a razor blade and gasket scraper, remove all the old packing (FIPG) material from the gasket surfaces and sealing groove.
- Thoroughly clean all components to remove all the loose material.
- Using a non−residue solvent, clean both sealing surfaces.

(b) Apply seal packing to the oil pump as shown in the illustration.

Seal packing: Part No. 08826−00080 or equivalent

NOTICE:

Avoid applying an excessive amount to the surface. Be particularly careful near oil passage.

- Install a nozzle that has been cut to a 2 − 3 mm (0.08 − 0.12 in.) opening.
- Parts must be assembled within 3 minutes of application. Otherwise the material must be removed and reapplied.
- Immediately remove nozzle from the tube and reinstall cap.

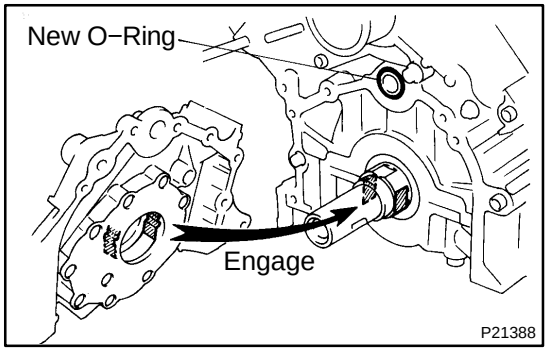

(c) Install a new O−ring to the cylinder block.

(d) Engage the spline teeth of the oil pump drive gear with the large teeth of the crankshaft, and slide the oil pump on the crankshaft.

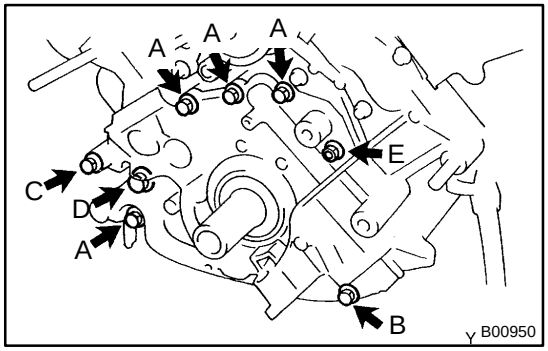

(e) Install the oil pump with the 8 bolts. Uniformly tighten the bolts in several passes.

Torque:

30.5 N·m (310 kgf·cm, 22 ft·lbf) for 14 mm head

15.5 N·m (160 kgf·cm, 11 ft·lbf) for others

HINT:

- Use a 6 mm hexagon wrench for the hexagon head bolt.
- Each bolt length is indicated in the illustration.
  Bolt length:
  35 mm (1.38 in.) for A of 12 mm head
  50 mm (1.97 in.) for B of 12 mm head
  106 mm (4.17 in.) for C of 12 mm head
  40 mm (1.57 in.) for D of 14 mm head
  30 mm (1.18 in.) for E of 6 mm hexagon head

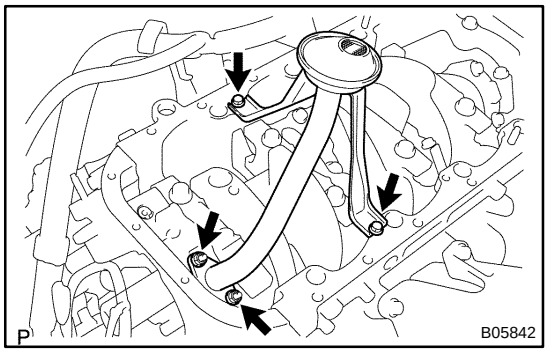

2. INSTALL OIL STRAINER

Install a new gasket and the oil strainer with the 2 bolts and 2 nuts.

Torque: 7.5 N·m (76 kgf·cm, 66 in.·lbf)

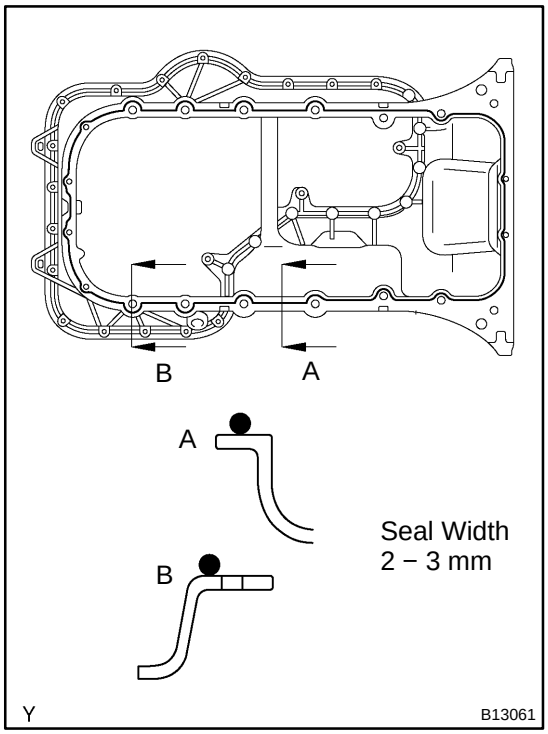

3. INSTALL NO.1 OIL PAN

(a) Remove any old packing (FIPG) material and be careful not to drop any oil on the contact surfaces of the No.1 oil pan, cylinder block, oil pump and rear oil seal retainer.

- Using a razor blade and gasket scraper, remove all the old packing (FIPG) material from the gasket surfaces and sealing groove.
- Thoroughly clean all components to remove all the loose material.
- Using a non−residue solvent, clean both sealing surfaces.

(b) Apply seal packing to the No.1 oil pan as shown in the illustration.

Seal packing: Part No. 08826−00080 or equivalent

- Install a nozzle that has been cut to a 2 − 3 mm (0.08 − 0.12 in.) opening.
- Parts must be assembled within 3 minutes of application. Otherwise the material must be removed and reapplied.
- Immediately remove nozzle from the tube and reinstall cap.

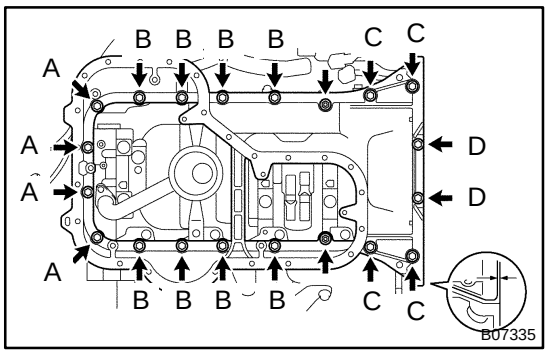

(c) Temporarily install the No.1 oil pan with the 18 bolts, stud bolt and 2 nuts.

HINT:

Each bolt length is indicated in the illustration.

Bolt length:

20 mm (0.79 in.) for A of 10 mm head

25 mm (0.98 in.) for B of 12 mm head

60 mm (2.36 in.) for C of 12 mm head

35 mm (1.38 in.) for D of 10 mm head

(d) Set the No.1 oil pan as shown in the illustration.

NOTICE:

Make sure the clearance between the rear ends of the No.1 oil pan and cylinder block is 0.2 mm (0.008 in.) or less. If the clearance is more than 0.2 mm (0.008 in.), the No.1 oil pan will be stretched.

(e) Uniformly tighten the bolts, and nuts in several passes.

Torque:

7.5 N·m (76 kgf·cm, 66 in.·lbf) for 10 mm head

28 N·m (290 kgf·cm, 21 ft·lbf) for 12 mm head

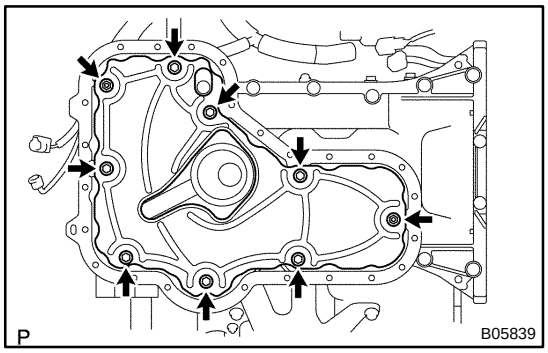

4. INSTALL OIL PAN BAFFLE PLATE

Install the baffle plate with the 7 bolts and 2 nuts.

Torque: 7.5 N·m (76 kgf·cm, 66 in.·lbf)

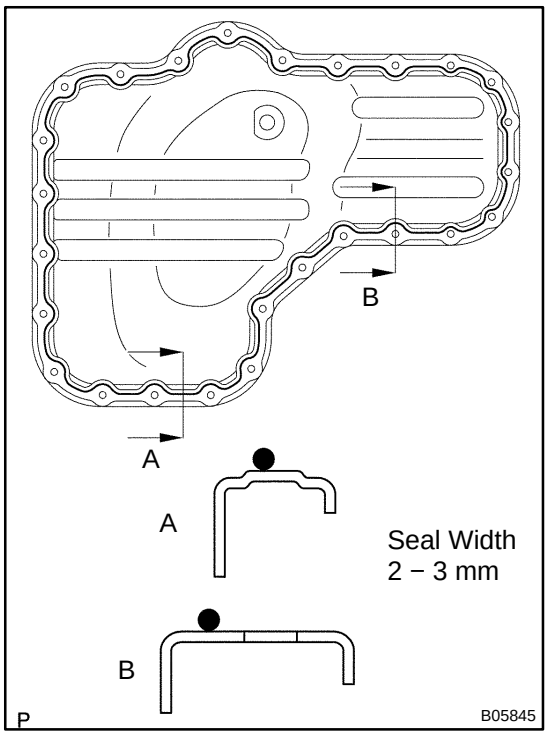

5. INSTALL NO.2 OIL PAN

(a) Remove any old packing (FIPG) material and be careful not to drop any oil on the contact surfaces of the No.1 and No.2 oil pans.

- Using a razor blade and gasket scraper, remove all the old packing (FIPG) material from the gasket surfaces and sealing groove.
- Thoroughly clean all components to remove all the loose material.
- Using a non−residue solvent, clean both sealing surfaces.

NOTICE:

Do not use a solvent which will affect the painted surfaces.

(b) Apply seal packing to the No.2 oil pan as shown in the illustration.

Seal packing: Part No. 08826−00080 or equivalent

- Install a nozzle that has been cut to a 3 − 4 mm (0.12 − 0.16 in.) opening.

- Parts must be assembled within 3 minutes of application. Otherwise the material must be removed and reapplied.
- Immediately remove nozzle from the tube and reinstall cap.

(c) Install the No.2 oil pan with the 24 bolts and 2 nuts. Uniformly tighten the bolts and nuts in several passes.
Torque: 7.5 N·m (76 kgf·cm, 66 in.·lbf)

6. INSTALL CRANKSHAFT POSITION SENSOR
(See page IG−13)

7. INSTALL OIL FILTER, OIL COOLER AND FILTER BRACKET ASSEMBLY

(a) Install a new gasket to the oil filter bracket.

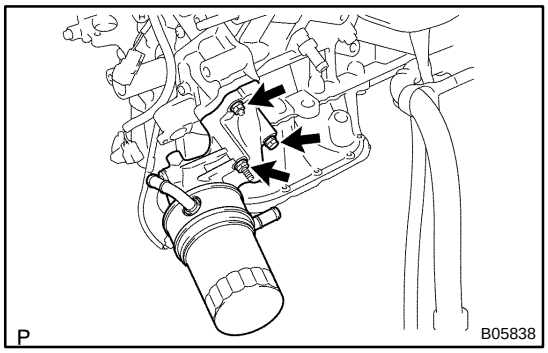

(b) Install the oil filter, oil cooler and filter bracket assembly with the 2 bolts and nut.
Torque: 18 N·m (185 kgf·cm, 13 ft·lbf)

(c) Connect the oil cooler hose to the oil cooler.

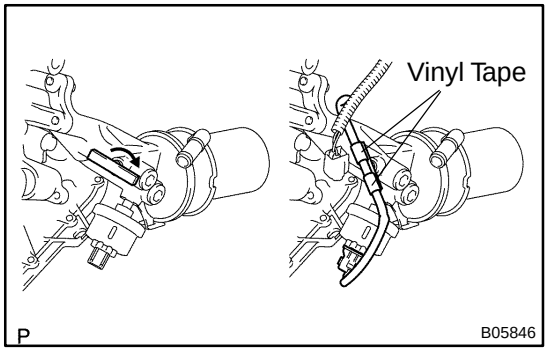

(d) Install the clamp.
Turn the clamp clockwise, and install the clamp to the oil filter bracket.

(e) Install the wire to the clamp with a vinyl tape.

(f) Connect the oil pressure switch connector.

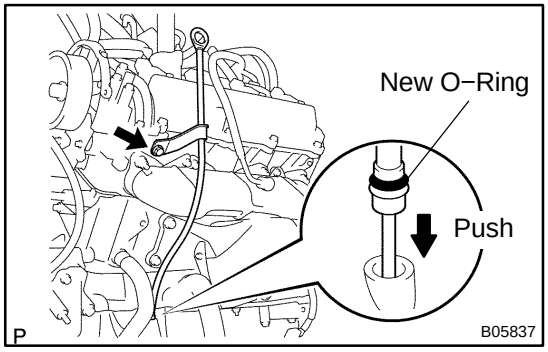

8. INSTALL OIL DIPSTICK GUIDE AND DIPSTICK

(a) Install a new O−ring to the dipstick guide.

(b) Apply soapy water to the O−ring.

(c) Push in the oil dipstick guide end into the guide hole of the No.1 oil pan.

(d) Install the oil dipstick guide with the bolt.
Torque: 15 N·m, (155 kgf·cm, 11 ft·lbf)

(e) Install the oil dipstick.

9. INSTALL CRANKSHAFT TIMING PULLEY
(See page EM−23)

10. **INSTALL NO.1 IDLER PULLEY (See page EM−23)**
11. **INSTALL NO.2 IDLER PULLEY (See page EM−23)**
12. **INSTALL TIMING BELT (See page EM−23)**
13. **DISCONNECT ENGINE FROM ENGINE STAND**
14. **INSTALL ENGINE TO VEHICLE**
    (2WD: See page EM−83)
    (4WD: See page EM−95)

LU08U−07

REASSEMBLY

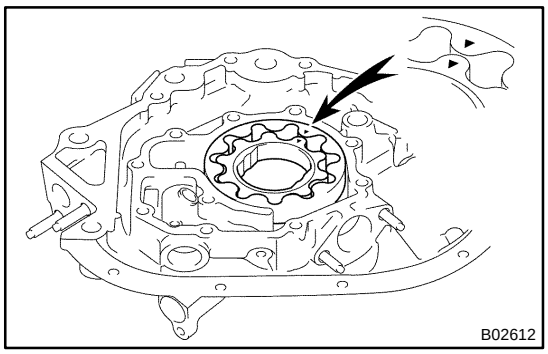

1. INSTALL DRIVE AND DRIVEN ROTORS

(a) Place the drive and driven rotors into pump body with the marks facing the pump body cover side.

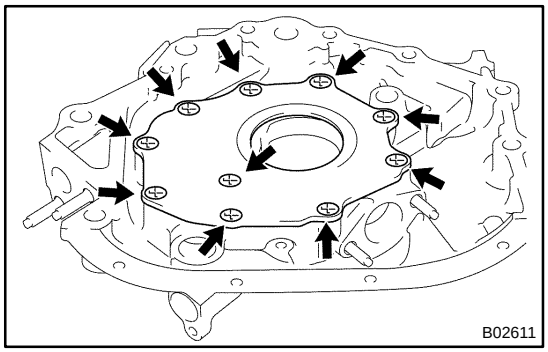

(b) Install the pump body cover with the 10 screws.
Torque: 10 N·m (105 kgf·cm, 7 ft·lbf)

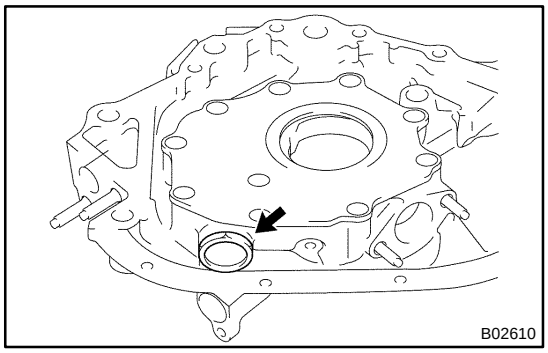

2. INSTALL RELIEF VALVE

(a) Insert the relief valve and compression spring into the oil pump body hole.

(b) Install the plug.
Torque: 49 N·m (500 kgf·cm, 36 ft·lbf)

LU08Q−11

REMOVAL

HINT:

When repairing the oil pump, the oil pan and strainer should be removed and cleaned.

1. **REMOVE ENGINE FROM VEHICLE**
   (2WD: See page EM−79)
   (4WD: See page EM−92)
2. **INSTALL ENGINE TO ENGINE STAND FOR DISASSEMBLY**
3. **REMOVE TIMING BELT (See page EM−16)**
4. **REMOVE NO.1 IDLER PULLEY (See page EM−16)**
5. **REMOVE NO.2 IDLER PULLEY (See page EM−16)**
6. **REMOVE CRANKSHAFT TIMING PULLEY**
   (See page EM−16)
7. **REMOVE CRANKSHAFT POSITION SENSOR**
   (See page IG−11)

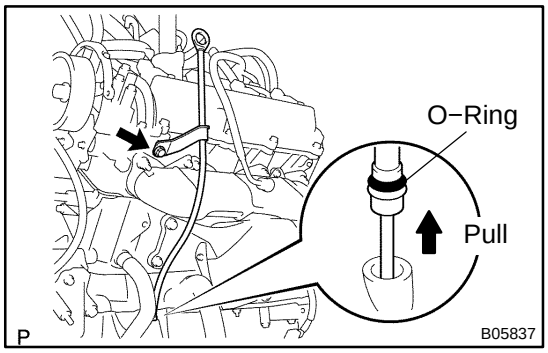

8. **REMOVE OIL DIPSTICK AND GUIDE**

(a) Remove the bolt holding the oil dipstick to the LH cylinder head.

(b) Pull out the dipstick guide together with the dipstick from the No.1 oil pan.

(c) Remove the O−ring from the dipstick guide.

9. **REMOVE OIL FILTER, OIL COOLER AND FILTER BRACKET ASSEMBLY**

(a) Disconnect the oil pressure switch connector.

(b) Take out the vinyl tape, and disconnect the wire from the clamp.

(c) Turn the clamp counterclockwise, and remove the clamp from the oil filter bracket.

(d) Disconnect the oil cooler hose from the oil cooler.

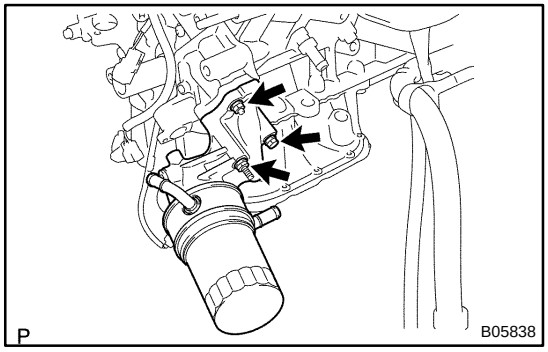

(e) Remove the 2 bolts, nut, the oil filter, oil cooler and filter bracket assembly.

(f) Remove the gasket from the filter bracket.

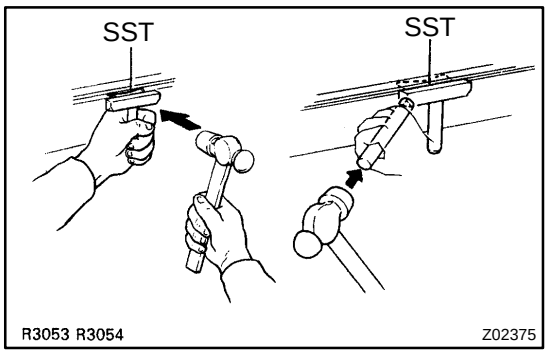

10. REMOVE NO.2 OIL PAN

(a) Remove the 24 bolts and 2 nuts.

(b) Insert the blade of SST between the No.1 and No.2 oil pans, cut off applied sealer and remove the No.2 oil pan.
SST 09032−00100

NOTICE:

- **Be careful not to damage the No.2 oil pan contact surface of the No.1 oil pan.**
- **Be careful not to damage the No.2 oil pan flange.**

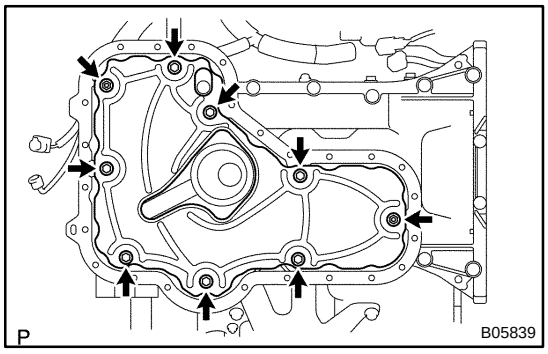

11. REMOVE OIL PAN BAFFLE PLATE

Remove the 7 bolts, 2 nuts and baffle plate.

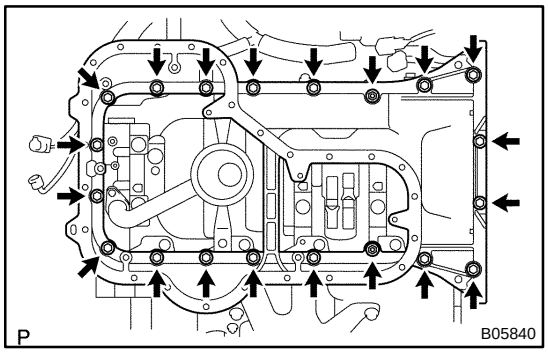

12. REMOVE NO.1 OIL PAN

(a) Remove the 18 bolts and 2 nuts.

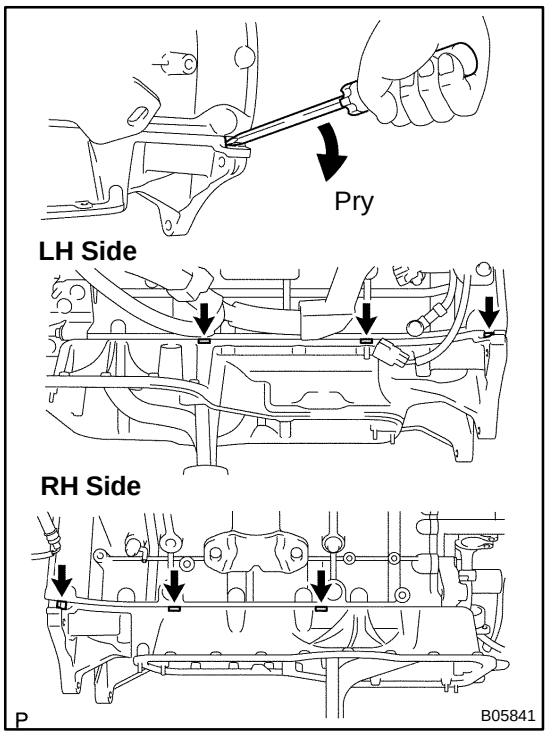

(b) Using a screwdriver, remove the No.1 oil pan by prying between the oil pan and cylinder block in the sequence shown.

NOTICE:

Be careful not to damage the contact surface of the cylinder block and No.1 oil pan.

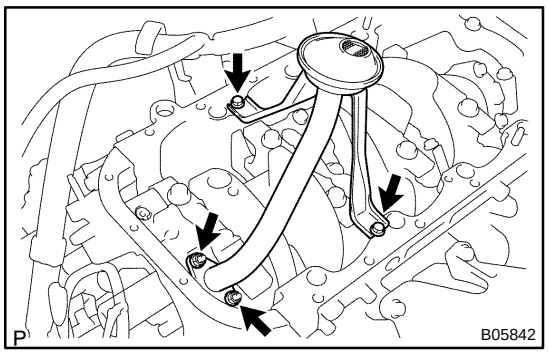

13. REMOVE OIL STRAINER

Remove the 2 bolt, 2 nuts, oil strainer and gasket.

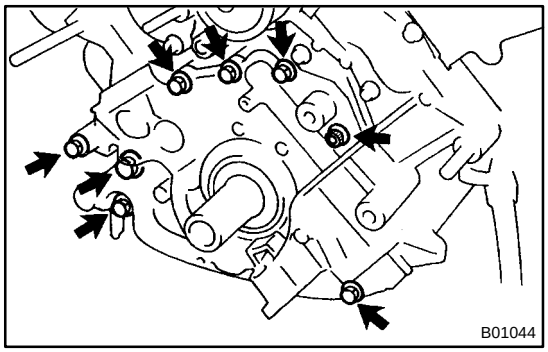

14. REMOVE OIL PUMP

(a) Remove the 8 bolts.

HINT:

Use a 6 mm hexagon wrench for the hexagon head bolt.

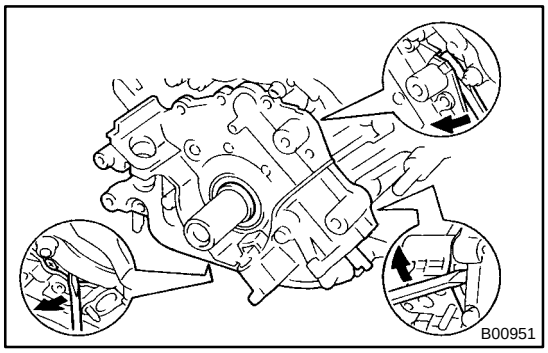

(b) Using a screwdriver, remove the oil pump by prying the portions between the oil pump and cylinder block.

NOTICE:

Be careful not to damage the contact surface of the cylinder block and oil pump.

(c) Remove the O−ring from the cylinder block.

LU0GX−05

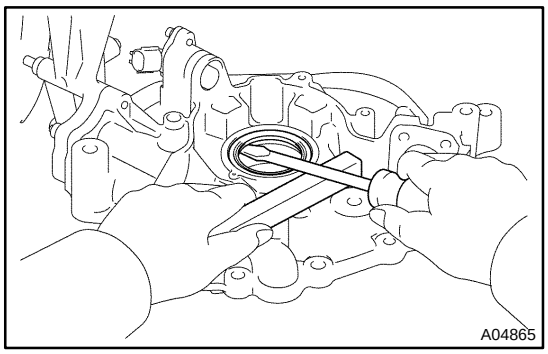

REPLACEMENT

REPLACE CRANKSHAFT FRONT OIL SEAL

HINT:

There are 2 methods ((a) and (b)) to replace the oil seal.

(a) If the oil pump is removed from the cylinder block:

(1) Using a screwdriver, pry out the oil seal.

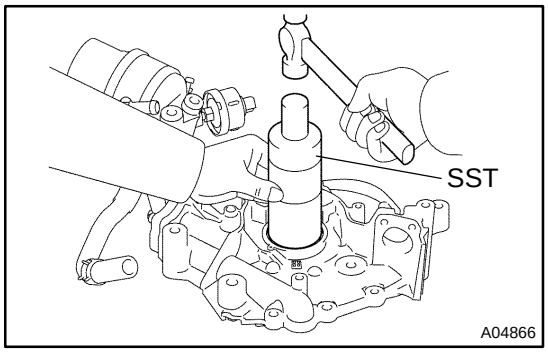

(2) Using SST and a hammer, tap in a new oil seal until its surface is flush with the oil pump body edge.

SST 09316−60011 (09316−00011)

(3) Apply MP grease to the oil seal lip.

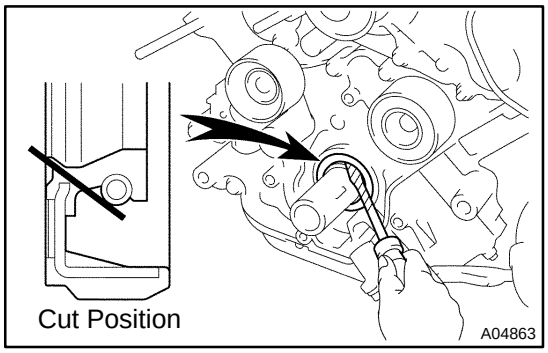

(b) If the oil pump is installed to the cylinder block:

(1) Using a knife, cut off the oil seal lip.

(2) Using a screwdriver, pry out the oil seal.

NOTICE:

Be careful not to damage the crankshaft. Tape the screwdriver tip.

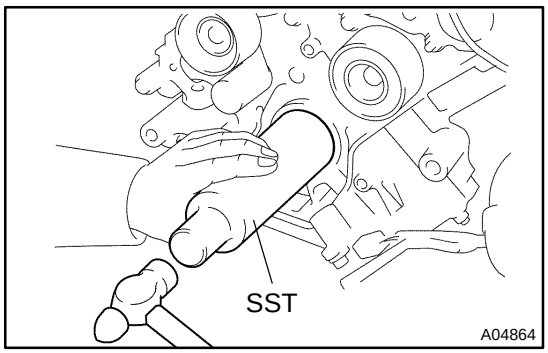

(3) Apply MP grease to a new oil seal lip.

(4) Using SST and a hammer, tap in the oil seal until its surface is flush with the oil pump body edge.

SST 09316−60011 (09316−00011)

BODY

MA04E−02

INSPECTION

TIGHTEN BOLTS AND NUTS ON CHASSIS AND BODY

(a) Where necessary, tighten all parts of the chassis.
- Front axle and suspension
- Drive train
- Rear axle and suspension
- Brake system
- Engine mounting, etc.

(b) Where necessary, tighten all parts of the body.
- Seat belt system
- Seats
- Doors and hood
- Body mountings
- Fuel tank
- Exhaust pipe system, etc.

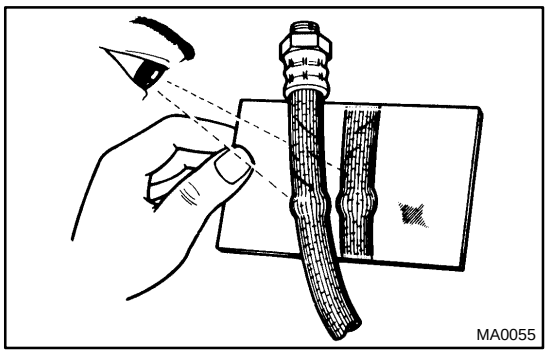

BRAKE

MA014−07

INSPECTION

1. INSPECT BRAKE LINE PIPES AND HOSES

HINT:

Work in a well−lighted area. Check the entire circumference and length of the brake hoses using a mirror if neccessary. Turn the front wheels fully to the right or left before beginning.

(a) Check all the brake lines and hoses for:
- Damage
- Wear
- Deformation
- Cracks
- Corrosion
- Leaks
- Bends
- Twists

(b) Check all the clamps for tightness and connections for leakage.

(c) Check that the hoses and lines are not near sharp edges, moving parts and the exhaust system.

(d) Check that the lines installed pass through the center of the grommets.

2. INSPECT FRONT BRAKE PADS AND DISCS

(See page BR−44)

HINT:

If a squealing or scraping noise occurs from the brake during driving, check the pad wear indicator.

If there are traces of the indicator contacting the disc rotor, the disc pad should be replaced.

3. INSPECT REAR BRAKE LININGS AND DRUMS

(See page BR−51)

CHASSIS

MA04D−04

INSPECTION

1. INSPECT STEERING LINKAGE

(a) Check the steering wheel freeplay (see page SR−9).

(b) Check the steering linkage for looseness or damage.

- Check that the tie rod ends do not have excessive play.
- Check that the dust seals and boots are not damaged.
- Check that the boot clamps are not loose.

2. INSPECT STEERING GEAR HOUSING OIL

Check the steering gear housing for oil leaks.

If leakage is found, check for cause and repair.

3. INSPECT BALL JOINTS AND DUST COVERS

(a) Inspect the ball joints for excessive looseness.

(b) Inspect the dust cover for damage.

4. 4WD:

INSPECT DRIVE SHAFT BOOTS

Inspect the drive shaft boots for loose clamps, grease leakage or damage.

5. CHECK OIL LEVEL IN MANUAL TRANSMISSION, TRANSFER AND DIFFERENTIAL

Remove the filler plug and feel inside the hole with your finger. Check that the oil comes to within 5 mm (0.20 in.) of the bottom edge of the hole.

If the level is low, add oil until it reaches the bottom of the fire hole.

Transmission oil: See page MT−7.
Transfer oil: See page TR−5.
Front differential oil (4WD): See page SA−36.
Rear differential oil: See page SA−101.

6. REPLACE MANUAL TRANSMISSION, TRANSFER AND DIFFERENTIAL OIL

(a) Remove the drain plug and drain the oil.

(b) Reinstall drain plug securely.

(c) Add new oil until it reaches the bottom of the fire hole.

Transmission oil: See page MT−7.
Transfer oil: See page TR−5.
Front differential oil (4WD): See page SA−36.
Rear differential oil: See page SA−101.

7. CHECK FLUID LEVEL IN AUTOMATIC TRANSMISSION (See page AT−4)

8. REPLACE AUTOMATIC TRANSMISSION FLUID

(a) Remove the drain plug and drain the fluid.

(b) Reinstall the drain plug securely.

(c) Fill the transmission (See page AT−4).

9. LUBRICATE PROPELLER SHAFT AND TIGHTEN BOLTS

(a) 4WD:

Lubricate the propeller shaft, referring to the lubrication chart. Before pumping in grease, wipe off any mud and dust on the grease fitting.

Grease grade:

Propeller shaft (Except Double−cardan joint): Lithium base chassis grease NLGI No. 2

Double−cardan joint: Molybdenum disulphide lithium base chassis grease NLGI No. 2

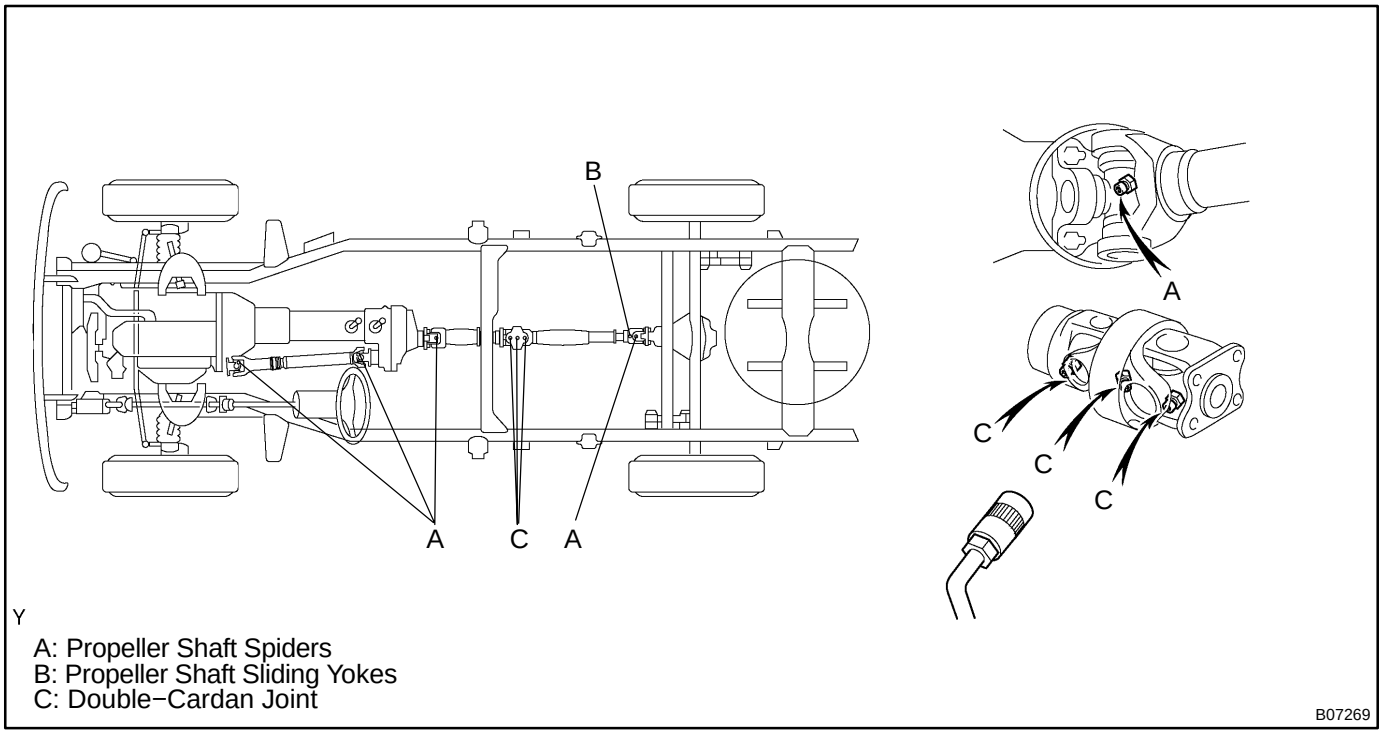

(b) Tighten the bolts for propeller shaft (2WD: See page PR−8) (4WD: See page PR−15).

10. ROTATE TIRES (See page SA−3)

ENGINE

MA004−20

INSPECTION

HINT:

Perform the following procedures.

1. **REPLACE TIMING CHAIN OR BELT**
   (1GR−FE: See pages EM−32 and EM−44)
   (2UZ−FE: See pages EM−16 and EM−23)
2. **INSPECT VALVE CLEARANCE**
   (1GR−FE: See page EM−4)
   (2UZ−FE: See page EM−4)
3. **INSPECT DRIVE BELT(S)**
   (1GR−FE: See pages SR−3 and AC−17)
   (2UZ−FE: See page SR−3 and AC−17)
4. **REPLACE ENGINE OIL AND OIL FILTER**
   (1GR−FE: See page LU−3)
   (2UZ−FE: See page LU−2)
5. **REPLACE ENGINE COOLANT**
   (1GR−FE: See page CO−2)
   (2UZ−FE: See page CO−2)
6. **INSPECT EXHAUST PIPES AND MOUNTINGS**

Visually inspect the pipes, hangers and connections for severe corrosion, leaks or damage.

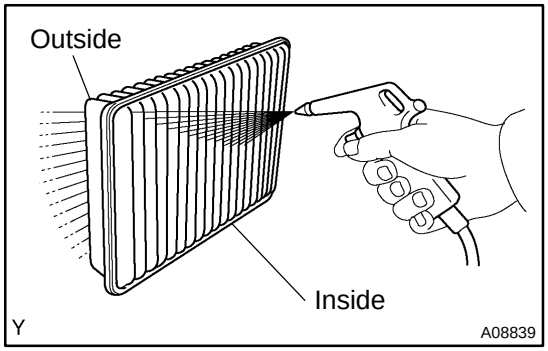

7. **INSPECT AIR FILTER**

(a) Visually check that the air filter is not excessively dirty or oily.

HINT:

Oiliness may indicate a stuck PCV valve.

If necessary, replace the air filter.

(b) Clean the air filter with compressed air.
First blow from the inside of the filter thoroughly then repeat from the outside.

8. **REPLACE AIR FILTER**

Replace the air filter with a new one.

9. **INSPECT FUEL LINES AND CONNECTIONS, AND FUEL TANK VAPOR VENT SYSTEM HOSES AND FUEL TANK BAND**

Visually inspect the fuel lines for cracks, leakage, loose connections, deformation or tank band looseness.

10. **REPLACE GASKET IN FUEL TANK CAP**
    (1GR−FE: See page EC−6)
    (2UZ−FE: See page EC−9)

11. REPLACE SPARK PLUGS
(1GR−FE: See page IG−1)
(2UZ−FE: See page IG−1)

12. INSPECT CHARCOAL CANISTER
(1GR−FE: See page EC−6)
(2UZ−FE: See page EC−9)

INSIDE VEHICLE

MA002−52

GENERAL MAINTENANCE

These maintenance checks on the vehicle are performed on the owner's responsibility. The owner may perform the maintenance or take the vehicle to a service center.
Check the parts of the vehicle described below on a daily basis. In most cases, special tool are not required. It is recommended that the owner perform these check.
The procedures for general maintenance are as follows.

1. GENERAL NOTES

- Maintenance requirements vary depending on the country.
- Check the maintenance schedule in the owner's manual supplement.
- Following the maintenance schedule is mandatory.
- Determine the appropriate time to service the vehicle using either miles driven or time (month) elapsed, whichever reaches the specification first.
- Maintain similar intervals between periodic maintenance unless noted.
- Failing to check each vehicle part could lead to poor engine performance and increase exhaust emissions.

2. LAMPS

(a) Check that the headlamps, stop lamps, taillamps, turn signal lamps, and other lamps are all working.
(b) Check that the headlamps are aimed properly.

3. WARNING LAMPS AND BUZZERS

Check that all the warning lamps and buzzers are working.

4. HORN

Check that the horn is working.

5. WINDSHIELD

Check for scratches, pits or abrasions.

6. WINDSHIELD WIPER AND WASHER

(a) Check if the wind washers are aimed properly. Also, check if the washer fluid hits the center of the operating range of each wiper on the windshield.
(b) Check that the wipers do not streak.

7. WINDSHIELD DEFROSTER

When the heater or air conditioner is on the defroster setting, check that air comes out of the defroster outlet.

8. REAR VIEW MIRROR

Check that the rear view mirror is securely mounted.

9. SUN VISORS

Check that the sun visors move freely and are securely mounted.

10. STEERING WHEEL

Check that the steering wheel has the proper freeplay. Also check for steering difficulty, freeplay in the steering wheel and unusual noises.

11. SEATS

(a) Check that the seat adjusters operate smoothly.
(b) Check that all the latches lock securely in all positions.
(c) Check that the head restraints move up and down smoothly and that the locks hold securely in all latched positions.
(d) When the rear seatbacks are folded down, check if the latches lock securely.

12. SEAT BELTS

(a) Check that the seat belt system such as the buckles, retractors and anchors operate properly and smoothly.
(b) Check that the belt webbing is not cut, frayed, worn or damaged.

13. ACCELERATOR PEDAL

Check the pedal for smooth operation and uneven pedal effort and catching.

14. CLUTCH PEDAL (See page CL−2)

(a) Check the pedal for smooth operation.

(b) Check that the pedal has the proper freeplay.

15. BRAKE PEDAL (See page BR−10)

(a) Check the pedal for smooth operation.

(b) Check that the pedal has the proper reserve distance and freeplay.

(c) Check the brake booster function.

16. BRAKES

In a safe place, check that the vehicle remains straight when applying the brakes.

17. PARKING BRAKE (See page BR−18)

(a) Check that the parking brake pedal has the proper range of motion.

(b) On a low incline, check that the parking brake alone can stabilize the vehicle.

18. AUTOMATIC TRANSMISSION ”PARK” MECHANISM

(a) Check the lock release mechanism of the selector lever for proper and smooth operation.

(b) When the selector lever is in the ”P” position and all brakes are released on a low incline, check that the vehicle is stabilized.

OUTSIDE VEHICLE

MA001−44

GENERAL MAINTENANCE

These maintenance checks on the vehicle are performed on the owner's responsibility. The owner may perform the maintenance or take the vehicle to a service center.
Check the parts of the vehicle described below on a daily basis. In most cases, special tool are not required. It is recommended that the owner perform these check.
The procedures for general maintenance are as follows.

1. GENERAL NOTES

- Maintenance requirements vary depending on the country.
- Check the maintenance schedule in the owner's manual supplement.
- Following the maintenance schedule is mandatory.
- Determine the appropriate time to service the vehicle using either miles driven or time (month) elapsed, whichever reaches the specification first.
- Maintain similar intervals between periodic maintenance unless noted.
- Failing to check each vehicle part could lead to poor engine performance and increase exhaust emissions.

2. TIRES

(a) Check the tire pressure with a gauge. Make adjustment if necessary.
(b) Check the surfaces of tires for cuts, damage or excessive wear.

3. WHEEL NUTS

Check for nuts that are loose or missing. Tighten them if necessary.

4. TIRE ROTATION (See page SA−3)

Check the maintenance schedule in the owner's manual supplement.

5. WINDSHIELD WIPER BLADES

Check the blades for wear or cracks whenever they are unable to wipe the windshield clean. Replace them if necessary.

6. FLUID LEAKS

(a) Check under the vehicle for leaking fuel, oil, water and other fluid.
(b) If you smell gasoline fumes or notice any leak, find the cause and correct it.

7. DOORS AND ENGINE HOOD

(a) Check that all of the doors and the trunk lid operate smoothly, and that all the latches lock securely.
(b) When the primary latch is released, check that the engine hood secondary latch prevents the hood from opening.

UNDER HOOD

MA003−52

GENERAL MAINTENANCE

1. GENERAL NOTES

- Maintenance requirements vary depending on the country.
- Check the maintenance schedule in the owner’s manual supplement.
- Following the maintenance schedule is mandatory.
- Determine the appropriate time to service the vehicle using either miles driven or time (month) elapsed, whichever reaches the specification first.
- Maintain similar intervals between periodic maintenance unless noted.
- Failing to check each vehicle part could lead to poor engine performance and increase exhaust emissions.

2. WINDSHIELD WASHER FLUID

Check that there is sufficient fluid in the tank.

3. ENGINE COOLANT LEVEL

Check that the coolant level is between the ”FULL” and ”LOW” lines on the see−through reservoir.

4. RADIATOR AND HOSES

(a) Check that the front of the radiator is clean and free of leaves, dirt and bugs.

(b) Check the hoses for cracks, kinks, rotting and loose connections.

5. BATTERY ELECTROLYTE LEVEL

Check that the electrolyte level of all the battery cells is between the upper and lower lines on the case.

6. BRAKE AND CLUTCH FLUID LEVELS

Check that the brake and clutch fluid levels are near the upper level line on the see−through reservoirs.

7. ENGINE DRIVE BELTS

Check the drive belt for fraying, cracks, wear or oiliness.

8. ENGINE OIL LEVEL

Check if the level of engine oil is between ”F” and ”L” on the dipstick with the engine turned off.

9. POWER STEERING FLUID LEVEL

- Check the level on the dipstick.
- The level should be in the ”HOT” or ”COLD” range depending on the fluid temperature.

10. AUTOMATIC TRANSMISSION FLUID

Visually check the overflow plug and oil pan for fluid leaks or traces of fluid.

11. EXHAUST SYSTEM

Check for unusual exhaust sounds or abnormal exhaust fumes. Find the cause and correct it.

COUNTER GEAR

COMPONENTS

MT0I2−01

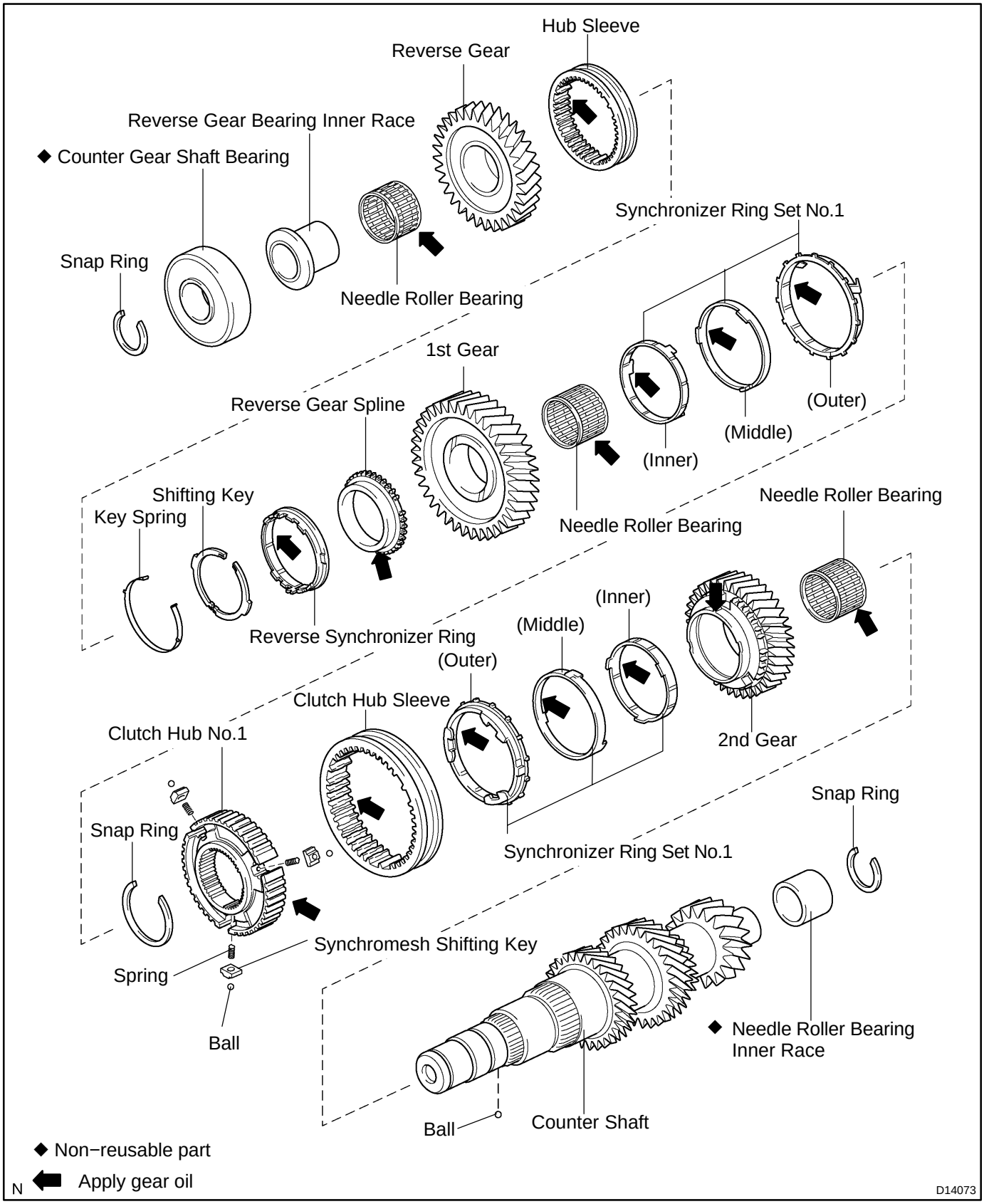

MT0I3−01

DISASSEMBLY

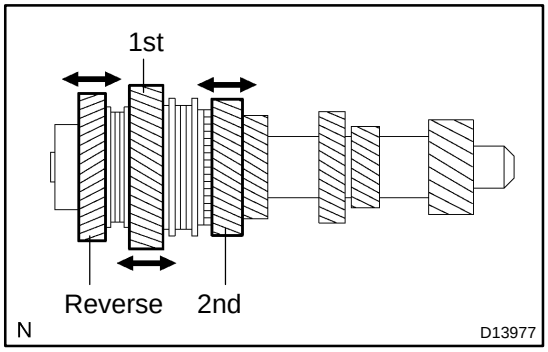

1. INSPECT EACH GEAR THRUST CLEARANCE

Using a dial indicator, measure the clearance between the gear and the shaft.

Standard gear thrust clearance:

Gear	Thrust Clearance mm (in.)
1st and 2nd	0.10 to 0.43 (0.0039 to 0.0169)
Reverse	0.12 to 0.37 (0.0047 to 0.0146)

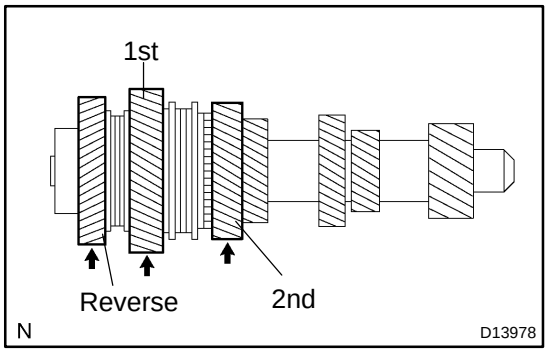

2. INSPECT EACH GEAR RADIAL CLEARANCE

Using a dial indicator, measure the clearance between the gear and the shaft with the needle roller bearing installed.

Standard gear radial clearance:

Gear	Radial Clearance mm (in.)
1st and 2nd	0.015 to 0.067 (0.00059 to 0.00264)
Reverse	0.015 to 0.065 (0.00059 to 0.00256)

If necessary, replace the gear, needle roller bearing or shaft.

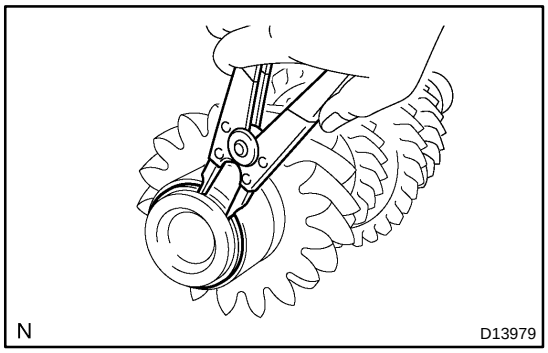

3. REMOVE NEEDLE ROLLER BEARING INNER RACE

(a) Using a snap ring expander, remove the snap ring.

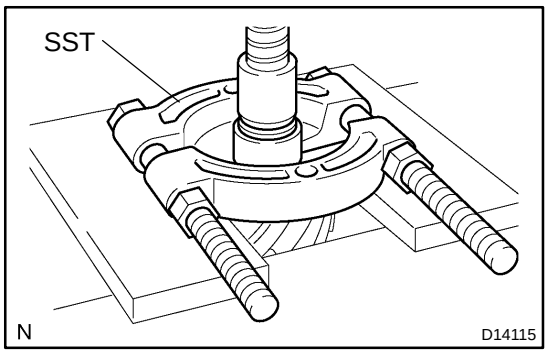

(b) Using SST and a press, remove the needle roller bearing inner race.
SST 09950−00020

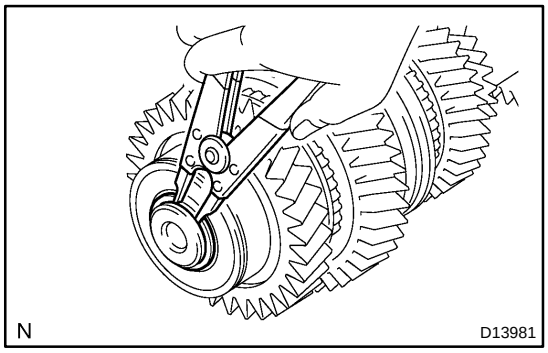

4. REMOVE REVERSE GEAR

(a) Using a snap ring expander, remove the snap ring.

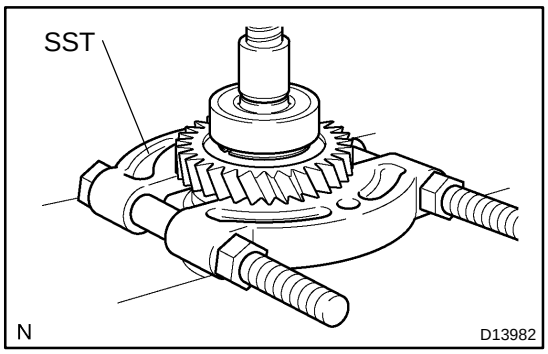

(b) Using SST and a press, remove the counter gear shaft bearing, reverse gear bearing inner race, needle roller bearing and reverse gear.
SST 09950−00020

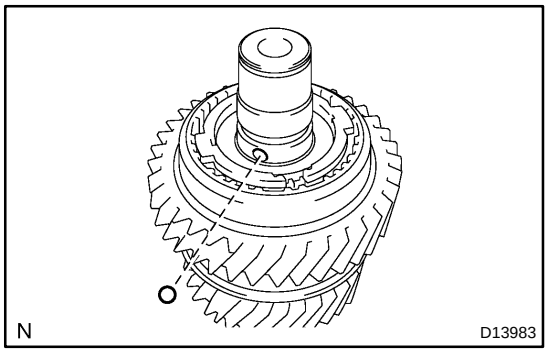

(c) Remove the ball from the counter shaft.

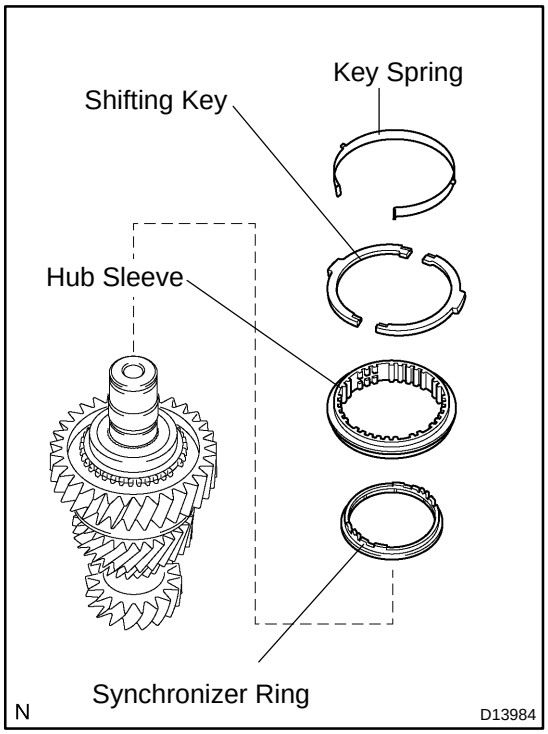

5. REMOVE HUB SLEEVE

Remove the hub sleeve, 2 shifting keys, key spring and reverse synchronizer ring from the reverse gear spline.

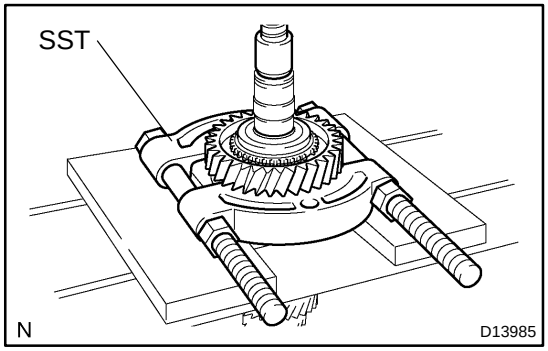

6. REMOVE 1ST GEAR

(a) Using SST and a press, remove the reverse gear spline and 1st gear.
SST 09950−00020

(b) Remove the needle roller bearing.

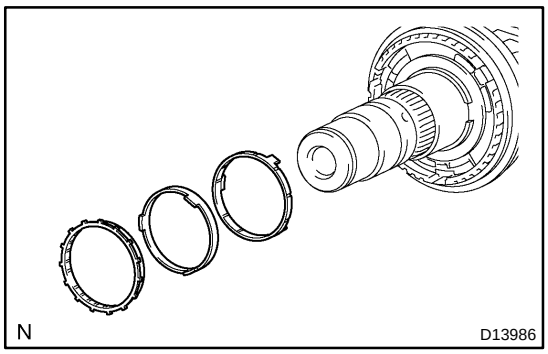

(c) Remove the synchronizer ring set No.1.

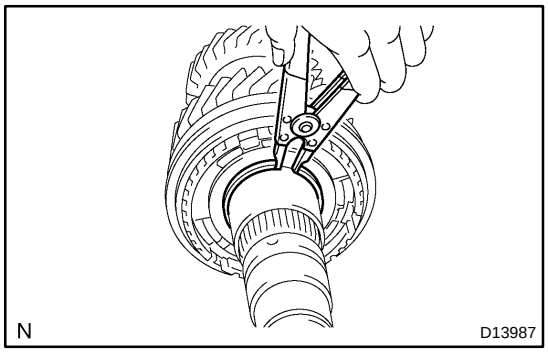

7. REMOVE 2ND GEAR

(a) Using a snap ring expander, remove the snap ring.

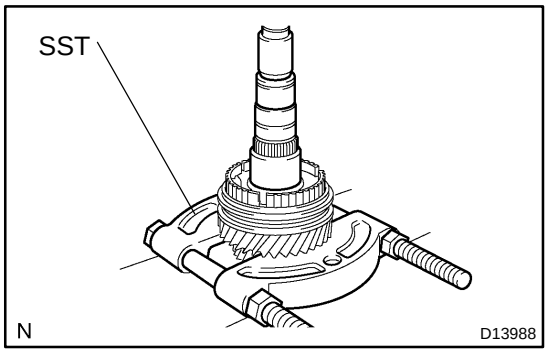

(b) Using SST and a press, remove the clutch hub No.1 and 2nd gear.
SST 09950−00020

(c) Remove the needle roller bearing.

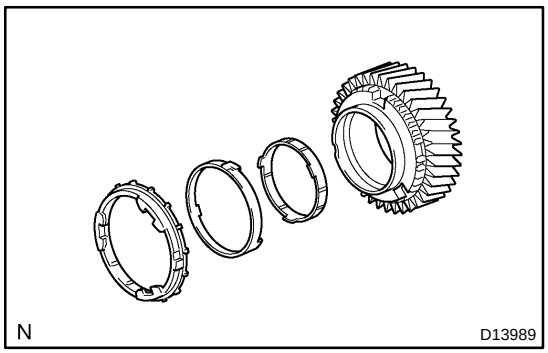

(d) Remove the synchronizer ring set No.1 from the 2nd gear.

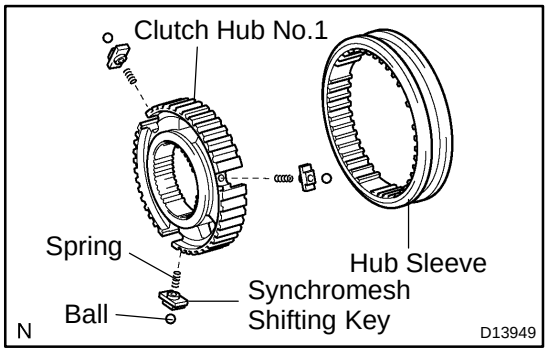

8. DISASSEMBLE CLUTCH HUB NO.1

Remove the hub sleeve, 3 synchromesh shifting keys, 3 balls and 3 springs from the clutch hub No.1.

HINT:

Be careful not to scatter the balls or springs.

MT0I4−01

INSPECTION

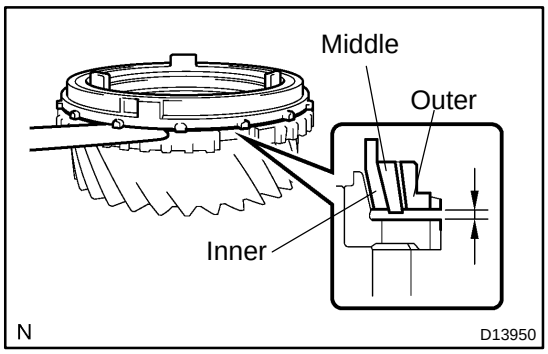

1. INSPECT SYNCHRONIZER RING SET NO.1

(a) Using a feeler gauge, measure the clearance between the synchronizer ring set No.1 and the 1st gear.

Standard clearance:
Inner: 1.48 to 2.12 mm (0.0583 to 0.0835 in.)
Middle: 0.68 to 1.92 mm (0.0268 to 0.0756 in.)
Outer: 0.88 to 1.72 mm (0.0346 to 0.0677 in.)
Minimum clearance:
Inner: 1.48 mm (0.0583 in.)
Middle: 0.68 mm (0.0268 in.)
Outer: 0.88 mm (0.0346 in.)

If the clearance is less than the minimum, replace the synchronizer ring set No.1.

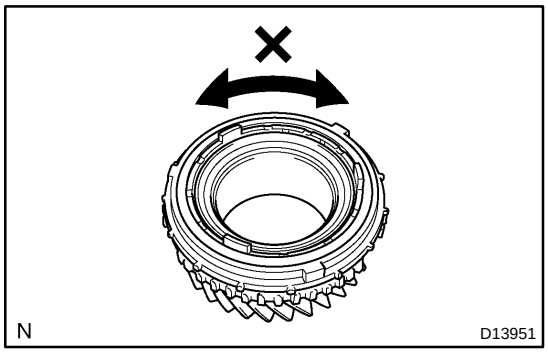

(b) Coat the 1st gear cone with gear oil. Check the braking effect of the synchronizer ring. Turn the synchronizer ring in one direction while pushing it against the 1st gear cone. Check that the ring locks.

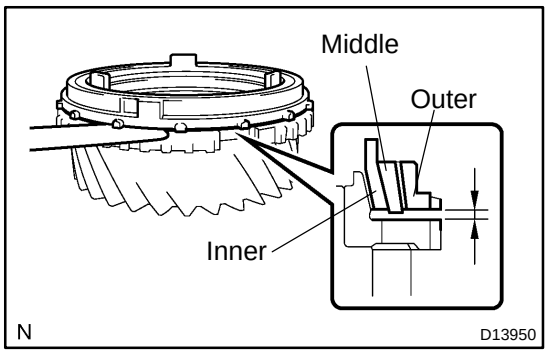

2. INSPECT SYNCHRONIZER RING SET NO.2

(a) Using a feeler gauge, measure the clearance between the synchronizer ring set No.1 and the 2nd gear.

Standard clearance:
Inner: 1.48 to 2.12 mm (0.0583 to 0.0835 in.)
Middle: 0.68 to 1.92 mm (0.0268 to 0.0756 in.)
Outer: 0.88 to 1.72 mm (0.0346 to 0.0677 in.)
Minimum clearance:
Inner: 1.48 mm (0.0583 in.)
Middle: 0.68 mm (0.0268 in.)
Outer: 0.88 mm (0.0346 in.)

If the clearance is less than the minimum, replace the synchronizer ring set No.2.

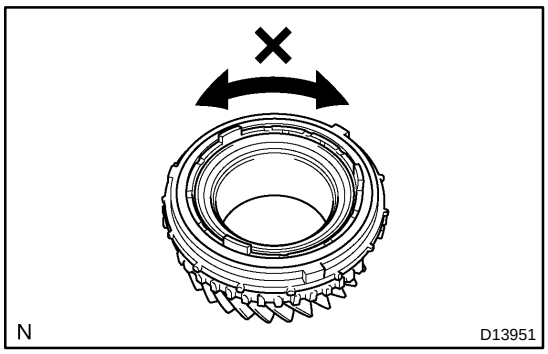

(b) Coat the 2nd gear cone with gear oil. Check the braking effect of the synchronizer ring. Turn the synchronizer ring in one direction while pushing it against the 2nd gear cone. Check that the ring locks.

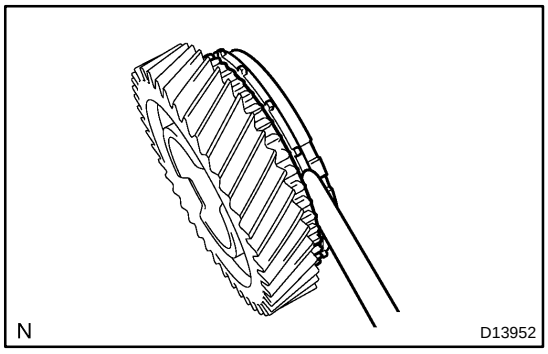

3. INSPECT REVERSE SYNCHRONIZER RING

(a) Using a feeler gauge, measure the clearance between the synchronizer ring and the reverse gear.

Standard clearance:
0.70 to 1.30 mm (0.0278 to 0.0512 in.)
Minimum clearance:
0.70 mm (0.0278 in.)

If the clearance is less than the minimum, replace the synchronizer ring.

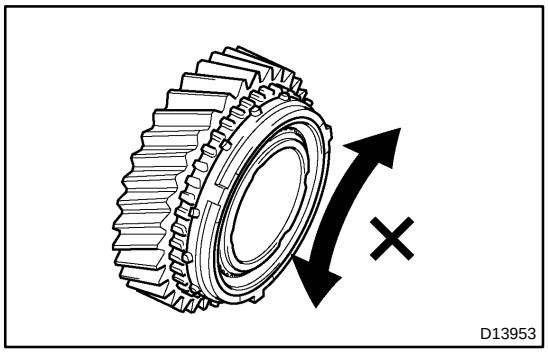

(b) Coat the reverse gear cone with gear oil. Check the braking effect of the synchronizer ring. Turn the synchronizer ring in one direction while pushing it against the reverse gear cone. Check that the ring locks.

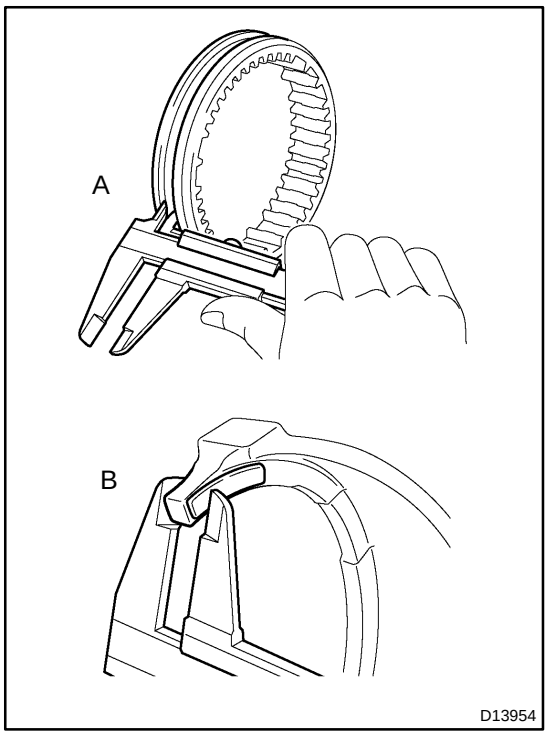

4. INSPECT HUB SLEEVE

(a) Using a vernier caliper, measure the width of the groove of the hub sleeve (A) and thickness of both the gear shift forks No.1 and No.4 (B) as shown in the illustration.

Width of the groove of the hub sleeve (A):
No. 1: 11.95 to 12.05 mm (0.4705 to 0.4744 in.)
No. 4: 10.5 to 10.6 mm (0.4134 to 0.4173 in.)
Thickness of the gear shift fork (B):
No. 1: 11.7 to 11.8 mm (0.4606 to 0.4646 in.)
No. 4: 9.76 to 10.24 mm (0.3843 to 0.4031 in.)

(b) Calculate the clearance using the formula below.

Formula:
Clearance = A − B
Standard:
No.1: 0.15 to 0.55 mm (0.0059 to 0.0217 in.)
No.4: 0.26 to 0.84 mm (0.0102 to 0.0331 in.)

If the clearance is not as specified, replace the hub sleeve and gear shift fork.

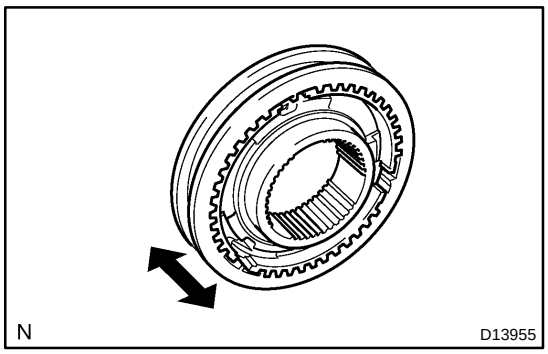

(c) Make sure that the hub sleeve and clutch hub slide smoothly.

If the hub sleeve and clutch hub do not slide smoothly, replace them.

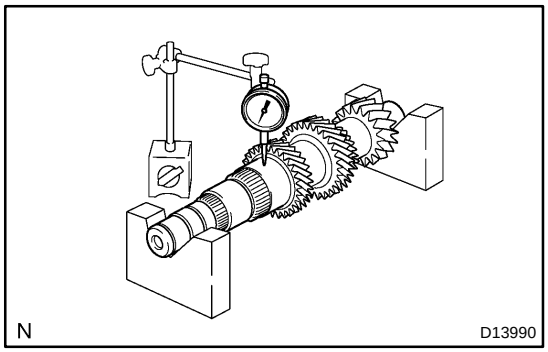

5. INSPECT COUNTER GEAR SHAFT

(a) Using a dial indicator, measure the shaft runout.

Maximum runout: 0.03 mm (0.0012 in.)

If the runout exceeds the maximum, replace the counter gear shaft.

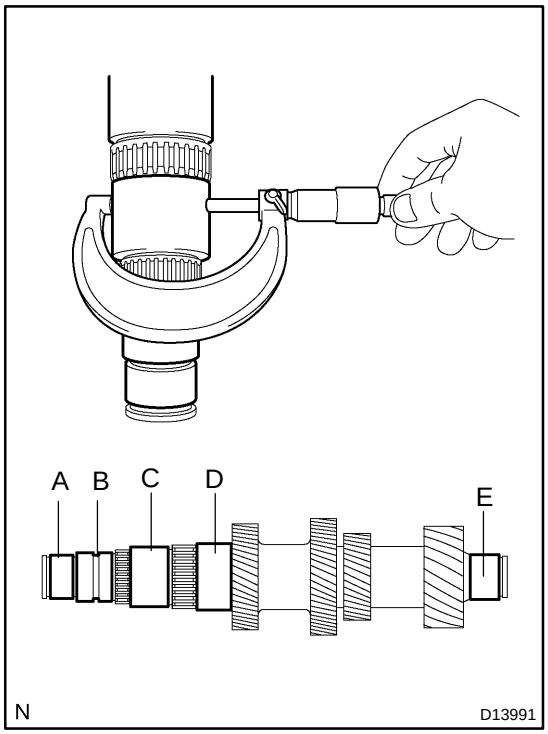

(b) Using a micrometer, measure the outside diameter of the counter gear shaft journal surface.

Standard:

Part	Outside diameter mm (in.)
A	34.002 to 34.015 (1.3387 to 1.3392)
B	36.985 to 37.000 (1.4561 to 1.4567)
C	47.985 to 48.000 (1.8892 to 1.8898)
D	53.985 to 54.000 (2.1254 to 2.1260)
E	34.002 to 34.015 (1.3387 to 1.3392)

Minimum:

Part	Outside diameter mm (in.)
A	34.002 (1.3387)
B	36.985 (1.4561)
C	47.985 (1.8892)
D	53.985 (2.1254)
E	34.002 (1.3387)

If the diameter is less than the minimum, replace the counter gear shaft.

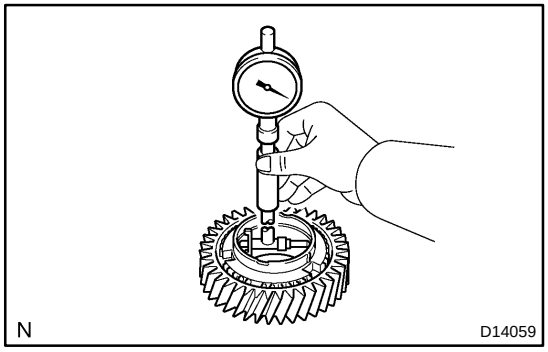

6. INSPECT 1ST GEAR

Using a cylinder gauge, measure the inside diameter of the gear.

Standard inside diameter:
54.015 to 54.040 mm (2.1266 to 2.1276 in.)
Maximum inside diameter:
54.040 mm (2.1276 in.)

If the inside diameter exceeds the maximum, replace the 1st gear.

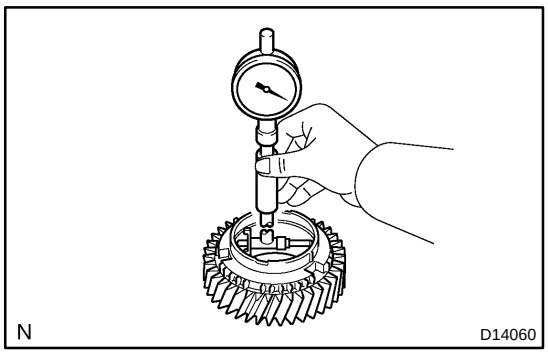

7. INSPECT 2ND GEAR

Using a cylinder gauge, measure the inside diameter of the gear.

Standard inside diameter:
60.015 to 60.040 mm (2.3628 to 2.3638 in.)
Maximum inside diameter:
60.040 mm (2.3638 in.)

If the inside diameter exceeds the maximum, replace the 2nd gear.

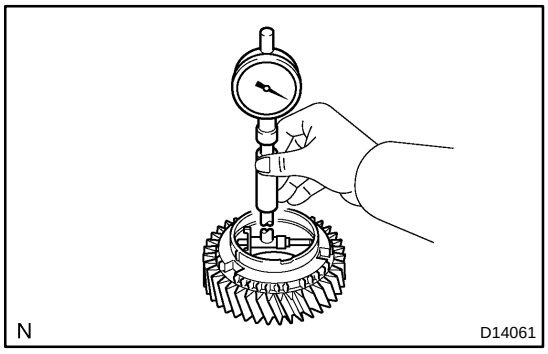

8. INSPECT REVERSE GEAR

Using a cylinder gauge, measure the inside diameter of the gear.

Standard inside diameter:
51.015 to 51.040 mm (2.0085 to 2.0094 in.)
Maximum inside diameter:
51.040 mm (2.0094 in.)

If the inside diameter exceeds the maximum, replace the reverse gear.

MT0I5−01

REASSEMBLY

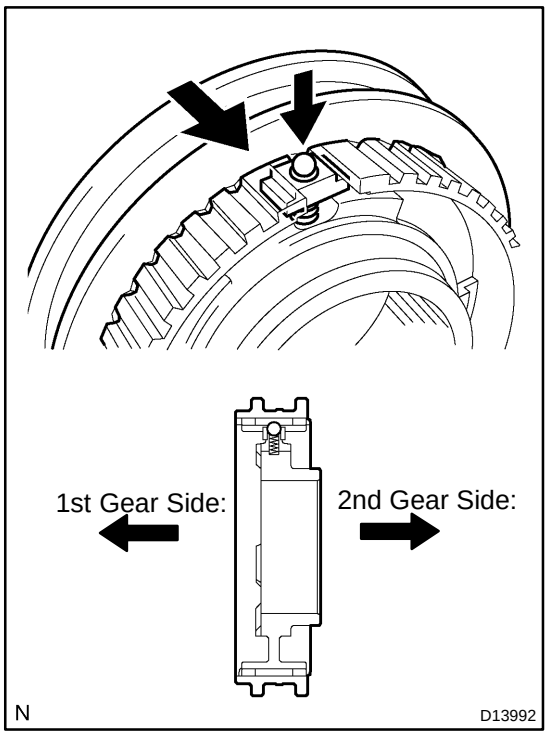

1. REASSEMBLE CLUTCH HUB NO.1

(a) Apply gear oil to the clutch hub sleeve and clutch hub.
(b) Install the clutch hub sleeve to the clutch hub.
(c) Install the 3 shifting keys to the clutch hub.
(d) Install the 3 shifting key springs to the clutch hub.
(e) Place the balls on the holes on the shifting keys, and install the hub sleeve while pushing down the balls.

NOTICE:

Be careful not to scatter the balls.

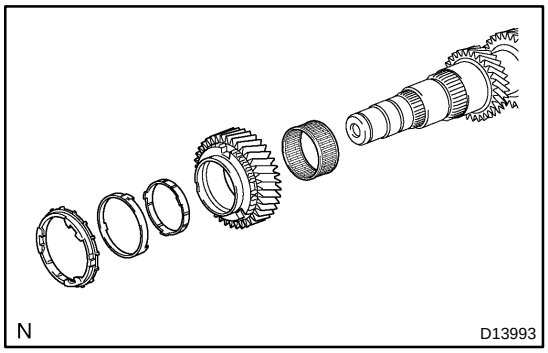

2. INSTALL 2ND GEAR

(a) Apply gear oil to the needle roller bearing and 2nd gear taper cone.
(b) Install the needle roller bearing, 2nd gear and synchronizer ring set No.1 to the counter shaft.

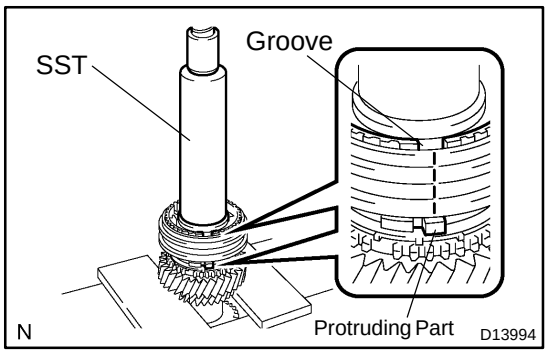

(c) Using SST and a press, install the clutch hub No.1.
SST 09308−14010

HINT:

Make sure that the protruding part on the synchronizer ring is fitted into the groove of the clutch hub.

(d) Make sure that the gear and synchronizer ring move smoothly.

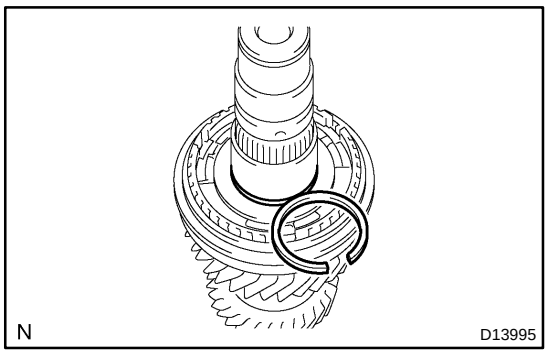

(e) Select a snap ring that allows for the minimum amount of axial play.

Standard clearance: 0.1 mm (0.0039 in.) or less

Mark	Thickness mm (in.)
A	2.28 to 2.33 (0.0898 to 0.0917)
B	2.33 to 2.38 (0.917 to 0.0937)
C	2.38 to 2.43 (0.0937 to 0.0957)
D	2.43 to 2.48 (0.0957 to 0.0976)
E	2.48 to 2.53 (0.0976 to 0.0996)
F	2.53 to 2.58 (0.0996 to 0.1016)
G	2.58 to 2.63 (0.1016 to 0.1035)

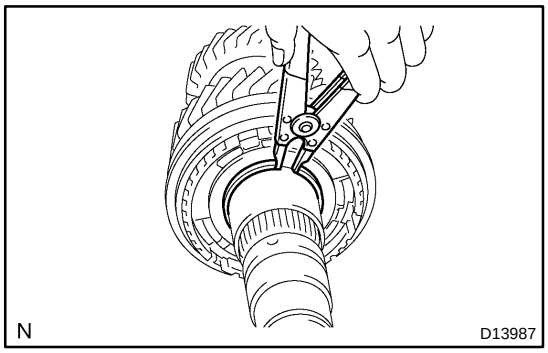

(f) Using a snap ring expander, install the snap ring.

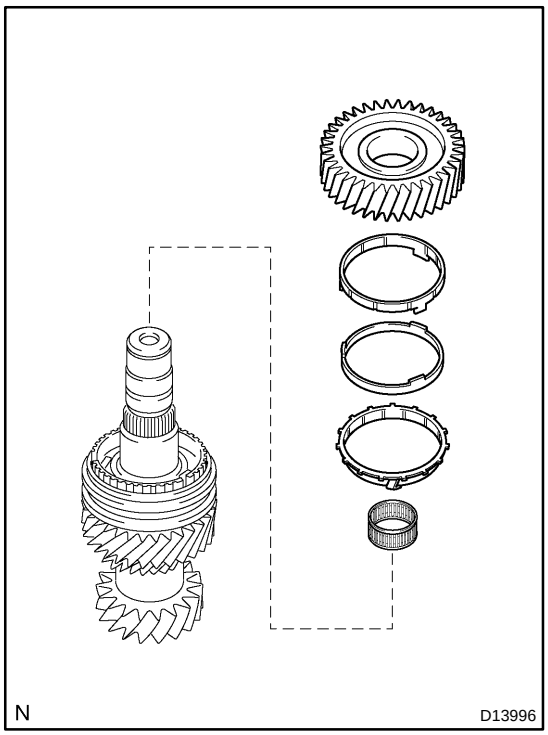

3. INSTALL 1ST GEAR

(a) Apply gear oil to the needle roller bearing and 1st gear taper cone.

(b) Install the needle roller bearing, synchronizer ring set No.1 and 1st gear.

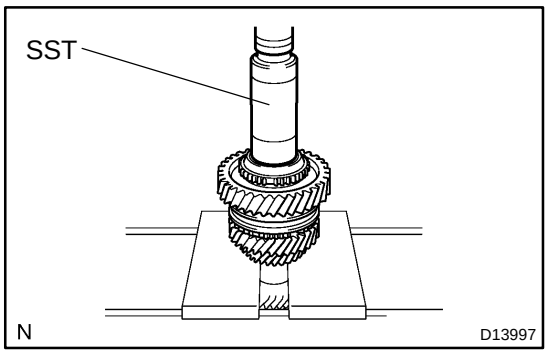

(c) Using SST and a press, install the reverse gear spline.
SST 09309−37010

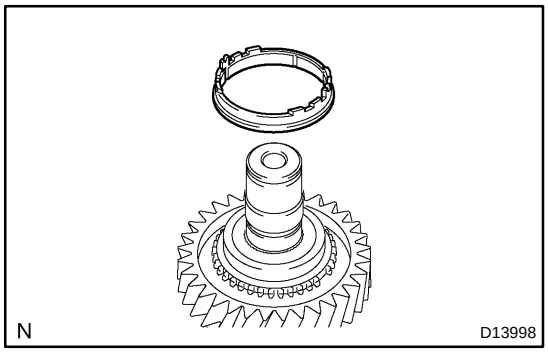

(d) Install the reverse synchronizer ring to the reverse gear spline.

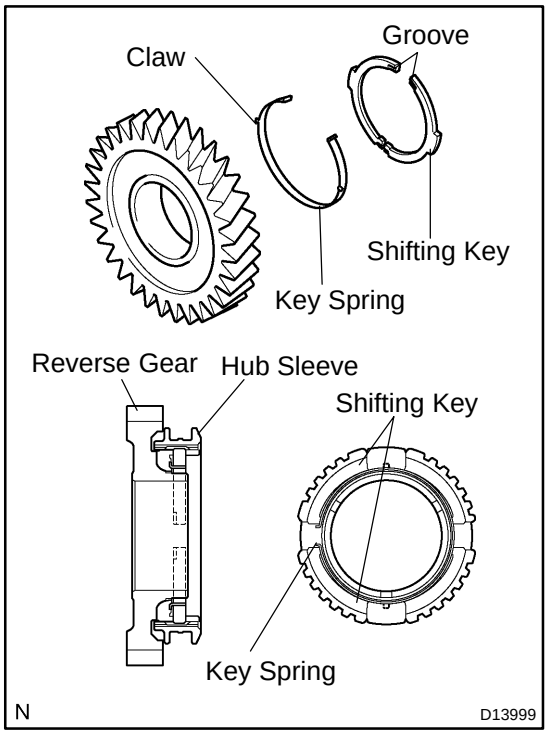

4. REASSEMBLE REVERSE GEAR

(a) Install the key spring and 2 shifting keys to the reverse gear.

HINT:

- Face the grooves on the shifting keys towards the reverse gear.
- Face the claws on the key spring towards the reverse gear.
- Make sure that the key spring is positioned as shown in the illustration.

(b) Install the hub sleeve to the reverse gear.

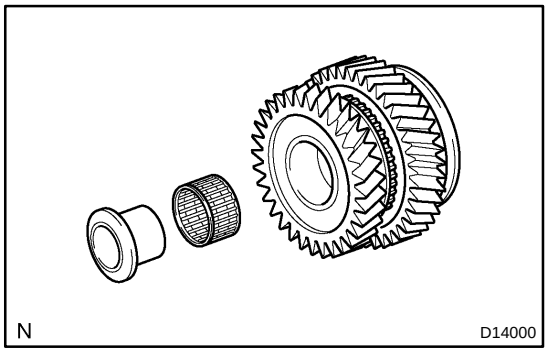

5. INSTALL REVERSE GEAR

(a) Apply gear oil to the needle roller bearing and reverse gear bearing inner race.

(b) Install the needle roller bearing and reverse gear bearing inner race to the reverse gear.

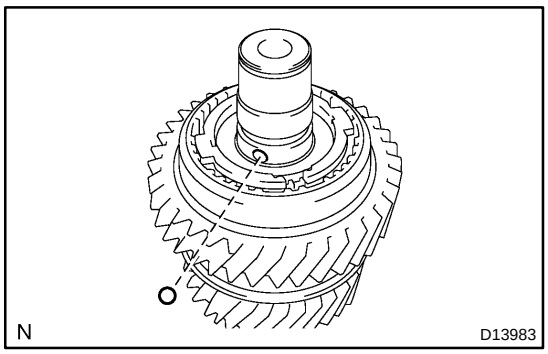

(c) Install the ball to the counter shaft.
(d) Install the reverse gear to the counter shaft.

HINT:
Make sure that the ball is fitted into the groove on the reverse gear bearing inner race.

(e) Make sure that the gear and synchronizer ring move smoothly.

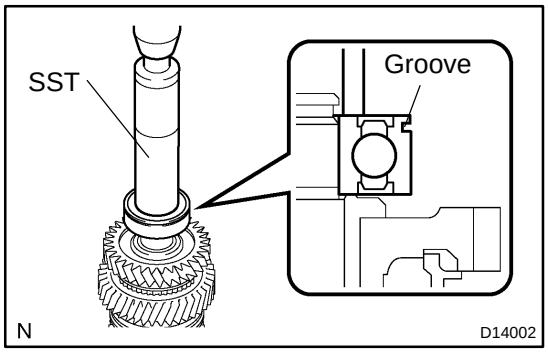

6. INSTALL COUNTER GEAR SHAFT BEARING

(a) Using SST and a press, install a new counter gear shaft bearing to the counter shaft.
SST 09608−06041

HINT:
Make sure that the bearing is installed in the direction shown in the illustration.

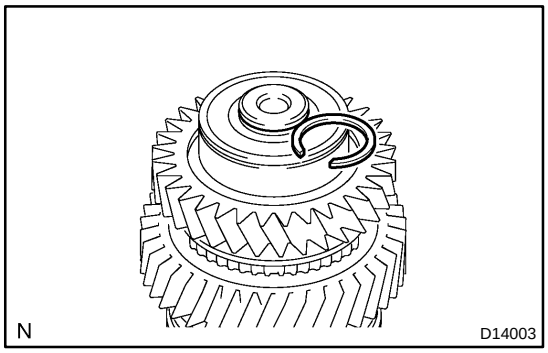

(b) Select a snap ring that allows for the minimum amount of axial play.
Standard clearance: 0.1 mm (0.0039 in.) or less

Mark	Thickness mm (in.)
A	2.35 to 2.40 (0.0925 to 0.0945)
B	2.40 to 2.45 (0.0945 to 0.0965)
C	2.45 to 2.50 (0.0965 to 0.0984)
D	2.50 to 2.55 (0.0984 to 0.1004)
E	2.55 to 2.60 (0.1004 to 0.1024)
F	2.60 to 2.65 (0.1024 to 0.1043)
G	2.65 to 2.70 (0.1043 to 0.1063)
H	2.70 to 2.75 (0.1063 to 0.1083)
J	2.75 to 2.80 (0.1083 to 0.1102)
K	2.80 to 2.85 (0.1102 to 0.1122)
L	2.85 to 2.90 (0.1122 to 0.1142)
M	2.90 to 2.95 (0.1142 to 0.1161)

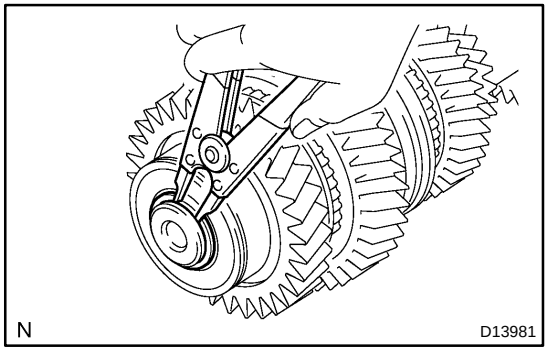

(c) Using a snap ring expander, install the snap ring.

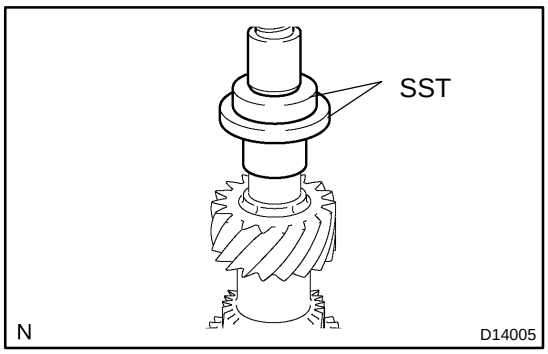

7. INSTALL NEEDLE ROLLER BEARING INNER RACE

(a) Using SST and a press, install a new needle roller bearing inner race.

SST 09608−03070, 09950−60010 (09951−00540)

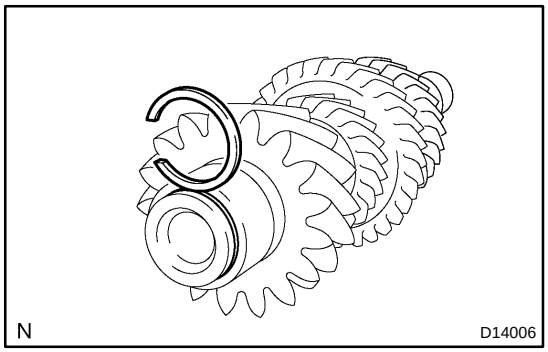

(b) Select a snap ring that allows for the minimum amount of axial play.

Standard clearance: 0.1 mm (0.0039 in.) or less

Mark	Thickness mm (in.)
A	2.35 to 2.40 (0.0925 to 0.0945)
B	2.40 to 2.45 (0.0945 to 0.0965)
C	2.45 to 2.50 (0.0965 to 0.0984)
D	2.50 to 2.55 (0.0984 to 0.1004)
E	2.55 to 2.60 (0.1004 to 0.1024)
F	2.60 to 2.65 (0.1024 to 0.1043)
G	2.65 to 2.70 (0.1043 to 0.1063)
H	2.70 to 2.75 (0.1063 to 0.1083)
J	2.75 to 2.80 (0.1083 to 0.1102)
K	2.80 to 2.85 (0.1102 to 0.1122)
L	2.85 to 2.90 (0.1122 to 0.1142)
M	2.90 to 2.95 (0.1142 to 0.1161)

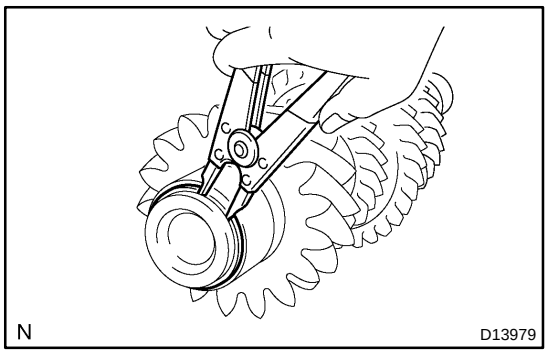

(c) Using a snap ring expander, install the snap ring.

CONTROL SHAFT ASSEMBLY

COMPONENTS

MT0I6−01

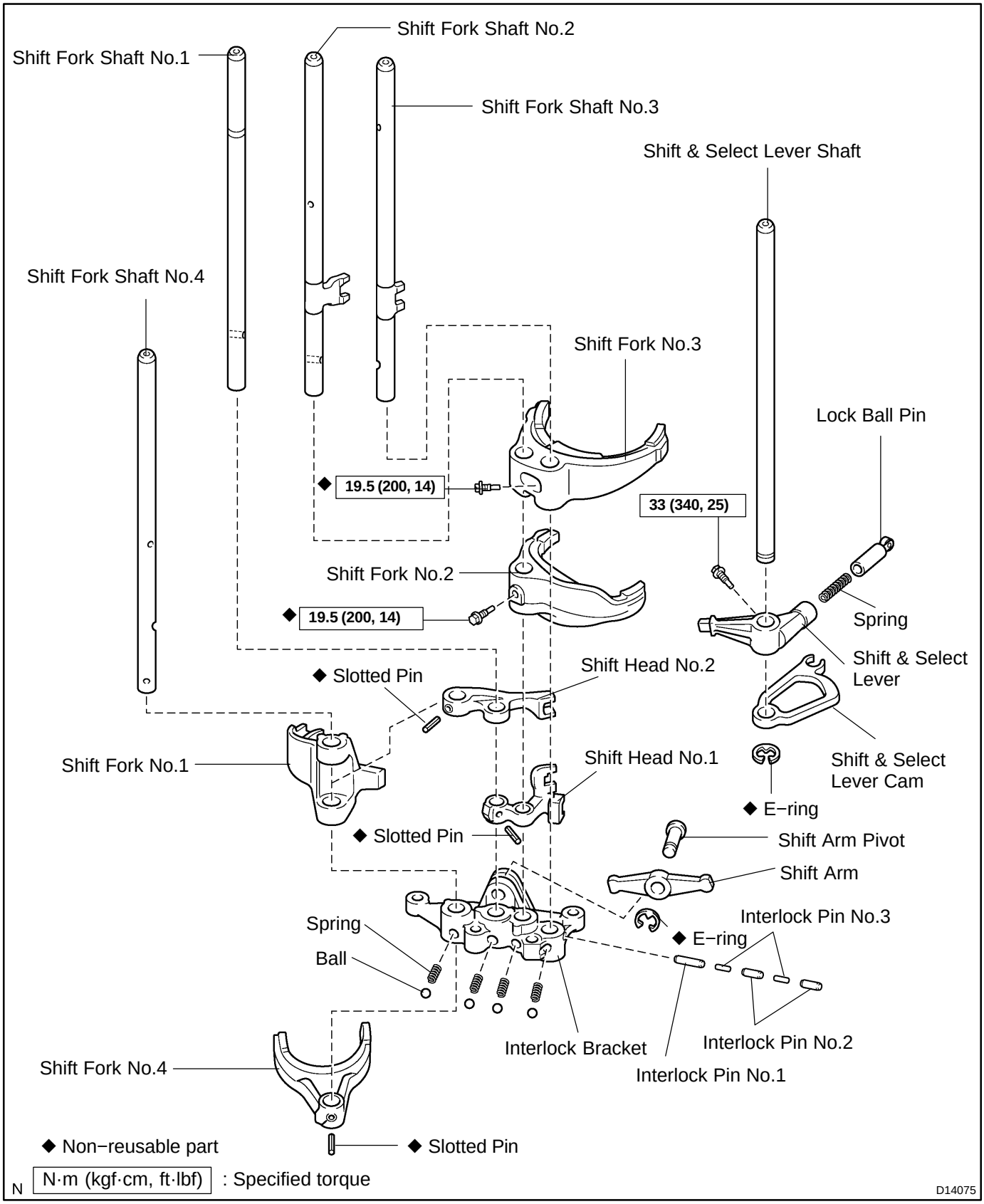

MT0I7−01

DISASSEMBLY

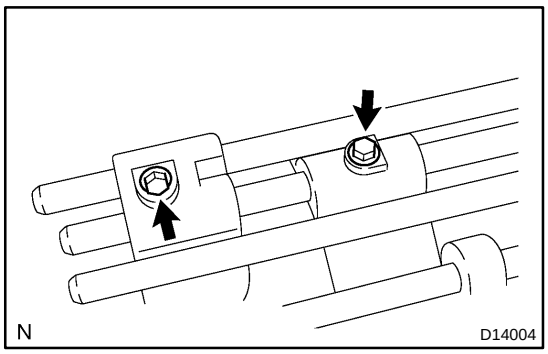

1. REMOVE SHIFT FORK NO.2 AND NO.3

Remove the 2 bolts and shift fork No.2 and No.3.

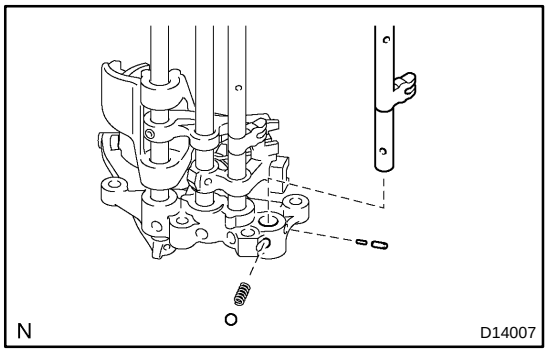

2. REMOVE SHIFT FORK SHAFT NO.3

Remove the shift fork shaft No.3, ball, spring, interlock pin No.2 and interlock pin No.3.

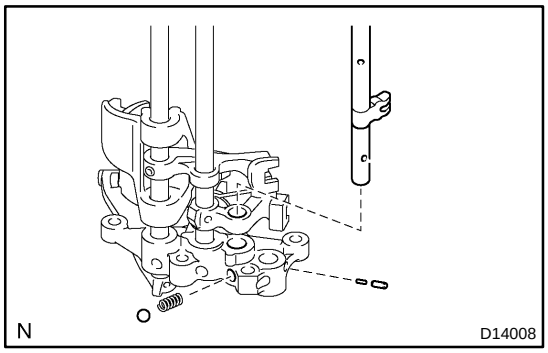

3. REMOVE SHIFT FORK SHAFT NO.2

Remove the shift fork shaft No.2, ball, spring, interlock pin No.2 and interlock pin No.3.

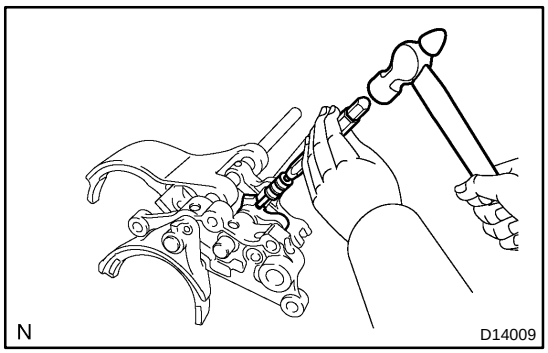

4. REMOVE SHIFT HEAD NO.1

(a) Using a pin punch (5 mm (0.20 in.)) and hammer, tap out the slotted pin.

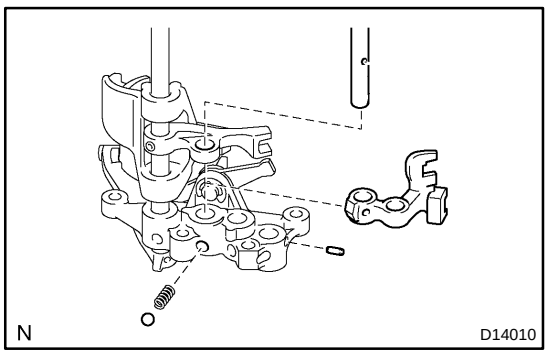

(b) Remove the shift fork shaft No.1, ball, spring, shift head No.1 and interlock pin No.1.

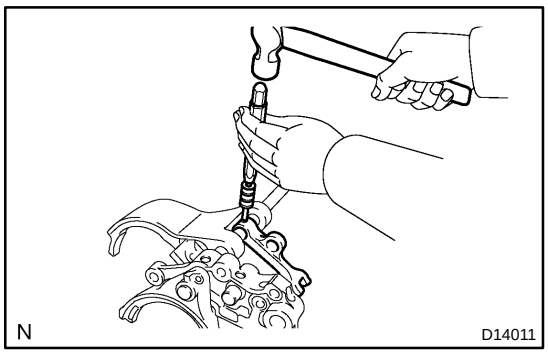

5. REMOVE SHIFT HEAD NO.2 AND SHIFT FORK NO.1

(a) Using a pin punch (5 mm (0.20 in.)) and hammer, tap out the slotted pin.

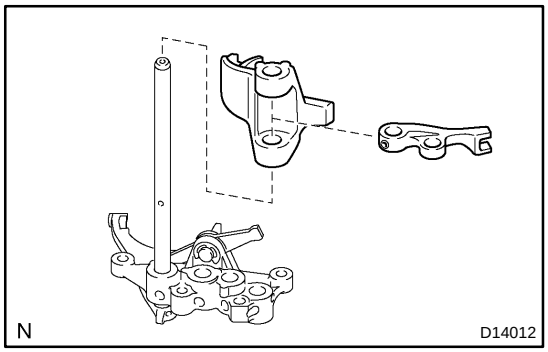

(b) Remove the shift head No.2 and shift fork No.1.

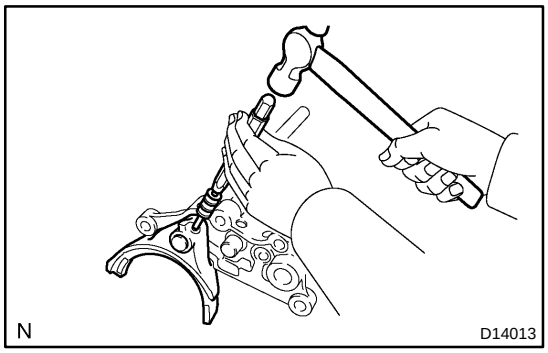

6. REMOVE SHIFT FORK NO.4

(a) Using a pin punch (5 mm (0.20 in.)) and hammer, tap out the slotted pin.

(b) Remove the shift fork No.4.

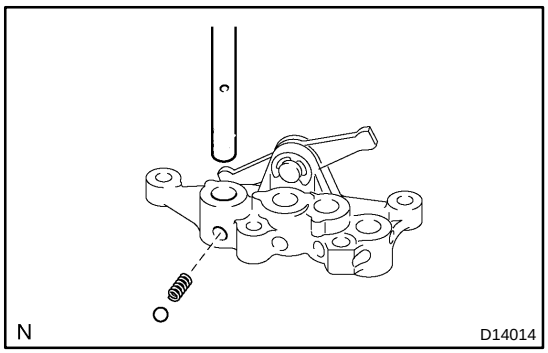

7. REMOVE SHIFT FORK SHAFT NO.4

Remove the shift fork shaft No.4, ball and spring.

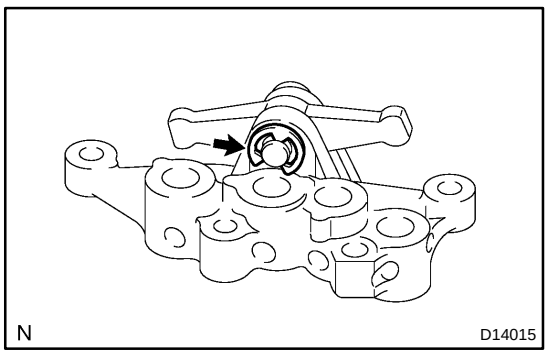

8. REMOVE SHIFT ARM

(a) Using a screwdriver, remove the E−ring.

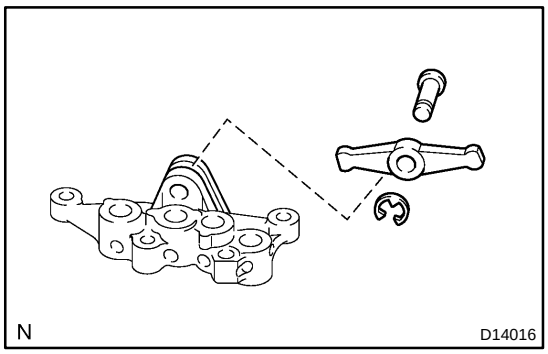

(b) Remove the shift arm pivot and shift arm.

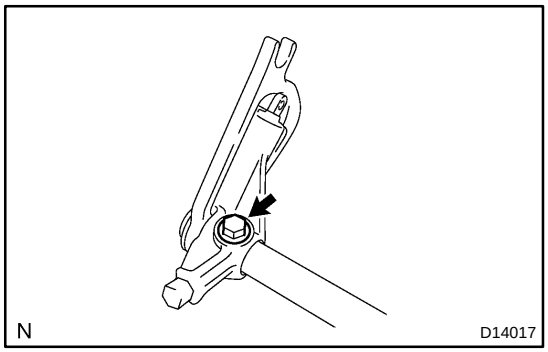

9. REMOVE SHIFT & SELECT LEVER

(a) Remove the bolt from the shift & select lever.

(b) Using a screwdriver, remove the E−ring.

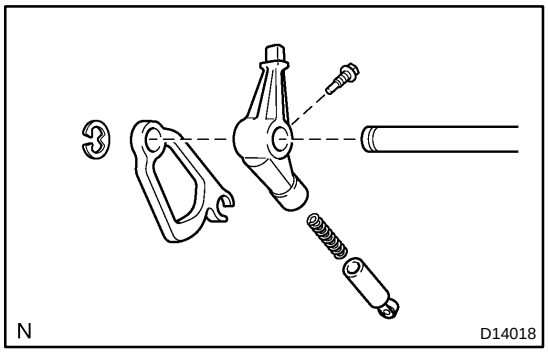

(c) Remove the shift & select lever cam, shift & select lever, lock ball pin and spring from the shift & select shaft.

MT0I8−01

REASSEMBLY

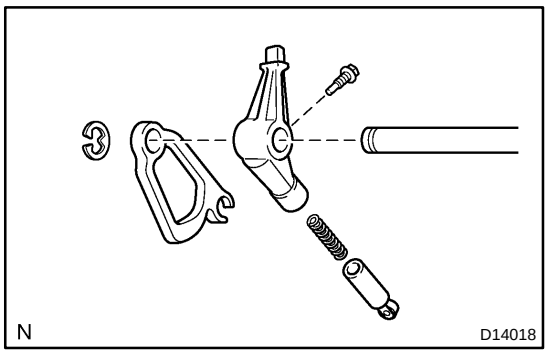

1. INSTALL SHIFT & SELECT LEVER

(a) Install the spring and lock ball pin to the shift & select lever.

(b) Install the shift & select lever to the shift & select lever cam.

(c) Install the shift & select lever shaft to the shift & select lever and shift & select lever cam.

(d) Install a new E−ring to the shift & select lever shaft.

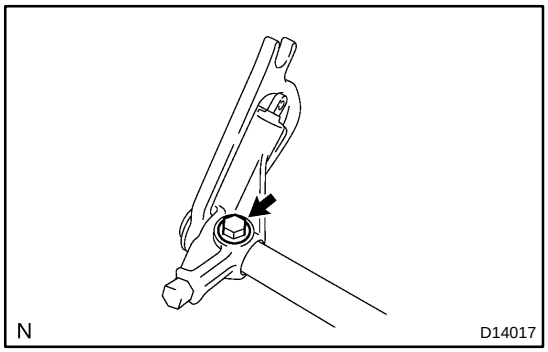

(e) Install the bolt to the shift & select lever.
Torque: 33 N·m (340 kgf·cm, 25 ft·lbf)

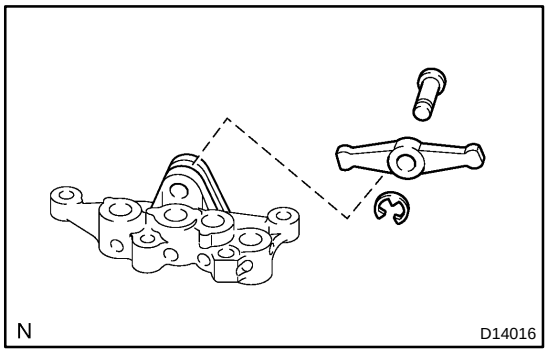

2. INSTALL SHIFT ARM

(a) Install the shift arm and shift arm pivot to the interlock bracket.

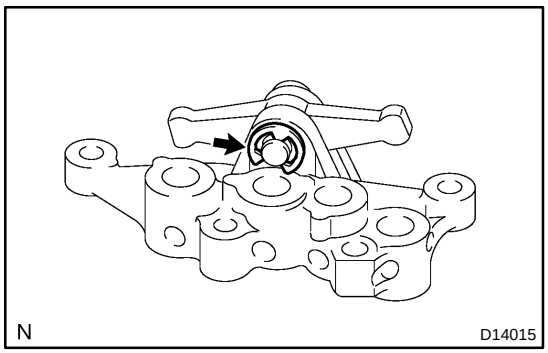

(b) Install a new E−ring to the shift arm pivot.

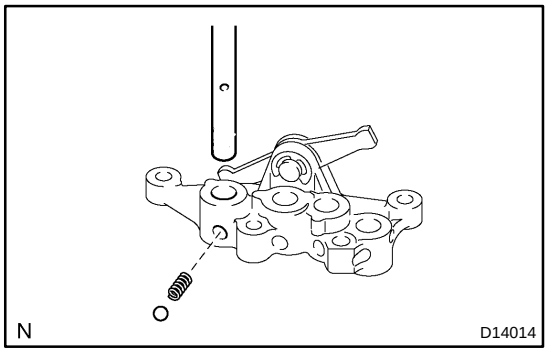

3. INSTALL SHIFT FORK SHAFT NO.4

(a) Install the spring and ball to the interlock bracket.

(b) Install the shift fork shaft No.4.

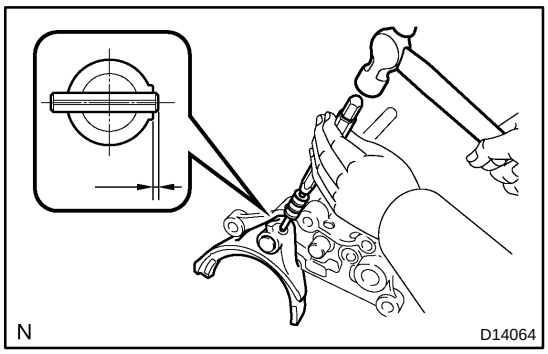

4. INSTALL SHIFT FORK NO.4

(a) Install the shift fork No.4 to the shift fork shaft No.4.

(b) Using a pin punch (5 mm (0.20 in.)) and hammer, tap in the slotted pin to the shaft fork No.4 and shift fork shaft No.4.

Drive in depth: 0 to 0.5 mm (0 to 0.0197 in.)

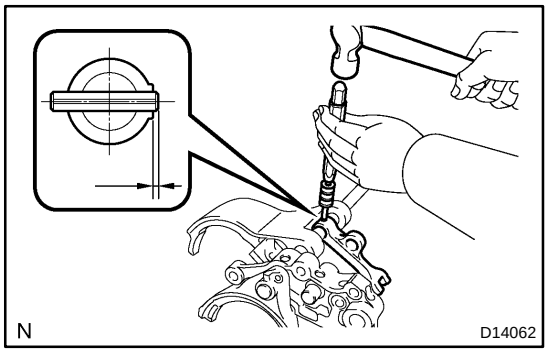

5. INSTALL SHIFT HEAD NO.2 AND SHIFT FORK NO.1

(a) Install the shift fork No.1 and shift head No.2 to the shift fork shaft No.4.

(b) Using a pin punch (5 mm (0.20 in.)) and hammer, tap in the slotted pin to the shift head No.2 and shift fork shaft No.4.

Drive in depth: 0 to 0.5 mm (0 to 0.0197 in.)

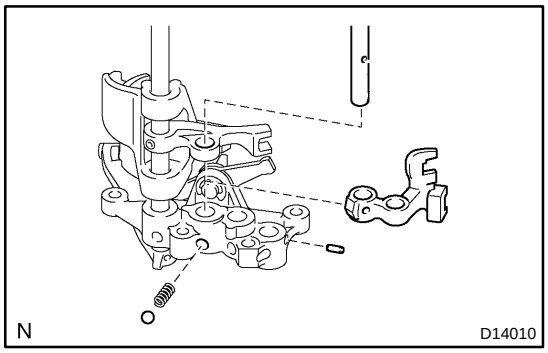

6. INSTALL SHIFT FORK SHAFT NO.1

(a) Apply MP grease to the interlock pin No.1, and install it to the interlock bracket.

(b) Install the spring and ball to the interlock bracket.

(c) Install the shift fork shaft No.1 to the interlock bracket.

HINT:

Make sure that the shift fork shaft No.4 is in the neutral position.

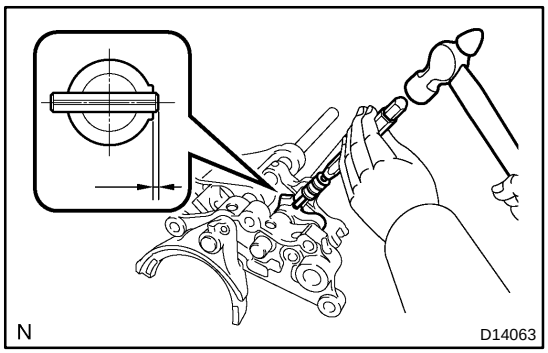

7. INSTALL SHIFT HEAD NO.1

(a) Install the shift head No.1 to the shift fork shaft No.1.

(b) Using a pin punch (5 mm (0.20 in.)) and hammer, tap in the slotted pin to the shift head No.1 and shift fork shaft No.1.

Drive in depth: 0 to 0.5 mm (0 to 0.0197 in.)

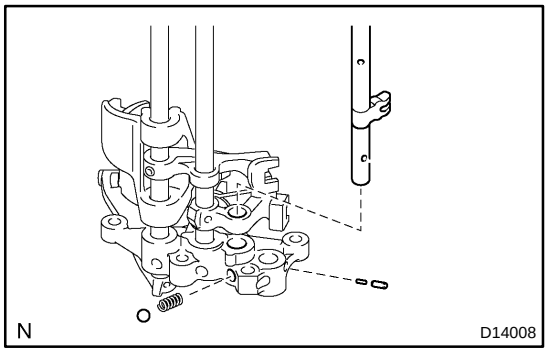

8. INSTALL SHIFT FORK SHAFT NO.2

(a) Apply MP grease to the interlock pin No.2 and No.3, and install them to the interlock bracket.

(b) Install the spring and ball to the the interlock bracket.

(c) Install the shift fork shaft No.2 to the interlock bracket.

HINT:

Make sure that the shift fork shaft No.3 and No.4 are in the neutral position.

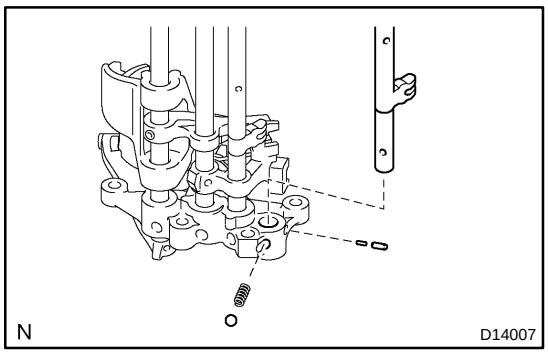

9. INSTALL SHIFT FORK SHAFT NO.3

(a) Apply MP grease to the interlock pin No.2 and No.3, and install them to the interlock bracket.

(b) Install the spring and ball to the interlock bracket.

(c) Install the shift fork shaft No.1 to the interlock bracket.

HINT:

Make sure that the shift fork shaft No.1, No.2 and No.4 are in the neutral position.

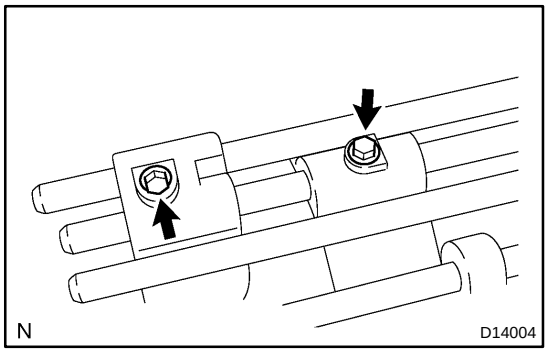

10. INSTALL SHIFT FORK NO.2 AND NO.3

Install the shift fork No.2 and No.3 with 2 new bolts.

Torque: 19.5 N·m (200 kgf·cm, 14 ft·lbf)

INPUT SHAFT

COMPONENTS

MT0HU−01

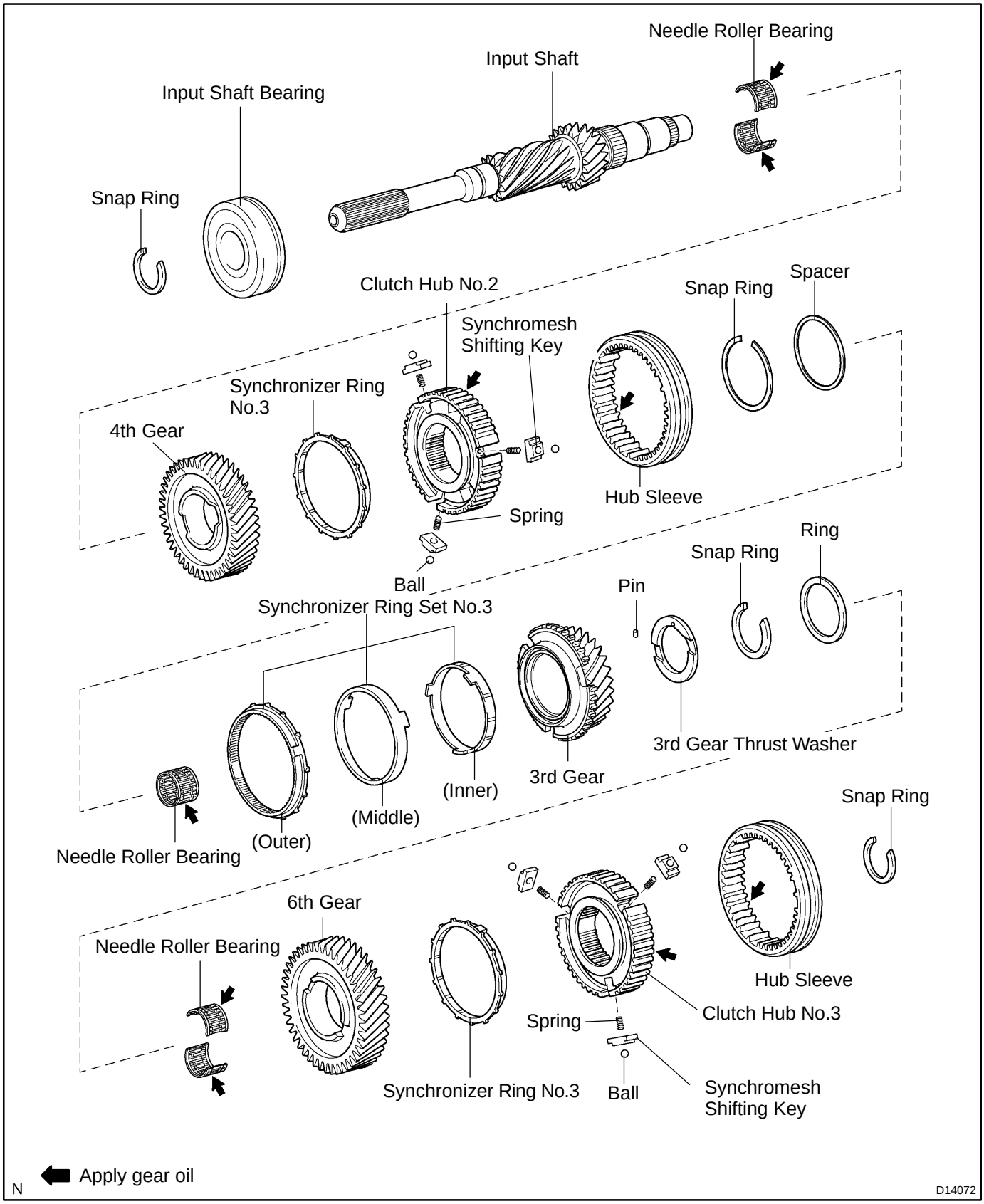

MT0HV−01

DISASSEMBLY

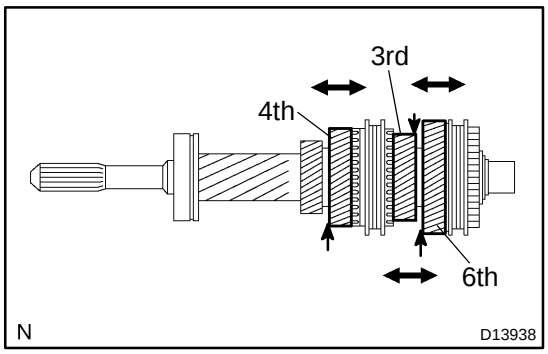

1. INSPECT EACH GEAR THRUST CLEARANCE

Using a feeler gauge, measure the clearance between the gear and the shaft.

Standard gear thrust clearance:

Gear	Thrust Clearance mm (in.)
3rd	0.09 to 0.52 (0.0035 to 0.0205)
4th	0.12 to 0.38 (0.0047 to 0.0150)
6th	0.20 to 0.49 (0.0079 to 0.0193)

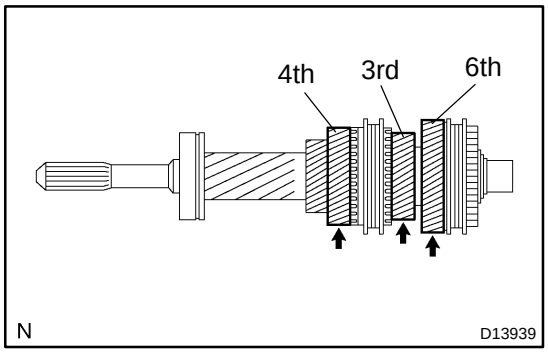

2. INSPECT EACH GEAR RADIAL CLEARANCE

Using a dial indicator, measure the clearance between the gear and the shaft with the needle roller bearing installed.

Standard gear radial clearance:

Gear	Radial Clearance mm (in.)
3rd and 4th	0.015 to 0.067 (0.00059 to 0.00264)
6th	0.015 to 0.065 (0.00059 to 0.00256)

If necessary, replace the gear, needle roller bearing or shaft.

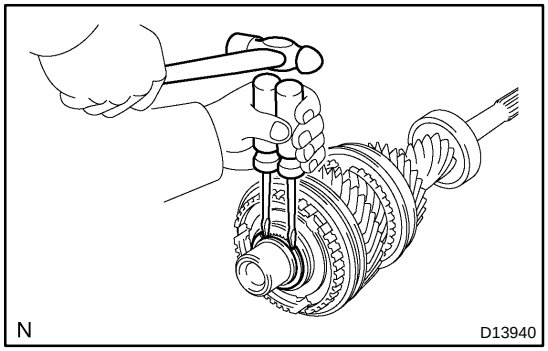

3. REMOVE 6TH GEAR

(a) Using 2 screwdrivers and a hammer, remove the snap ring.

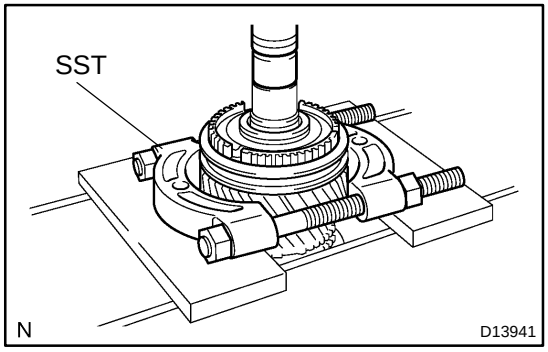

(b) Using SST and a press, remove the clutch hub No.3, hub sleeve, synchronizer ring and 6th gear.
SST 09950−00020

(c) Remove the needle roller bearing and ring.

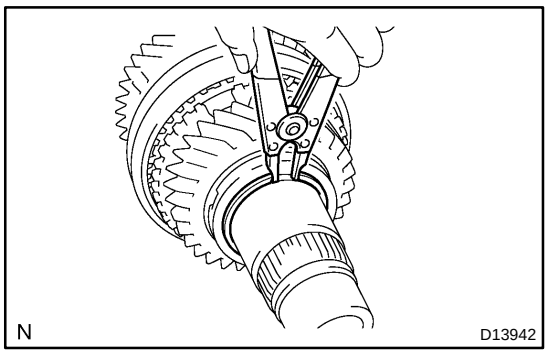

4. REMOVE 3RD GEAR

(a) Using a snap ring expander, remove the snap ring.

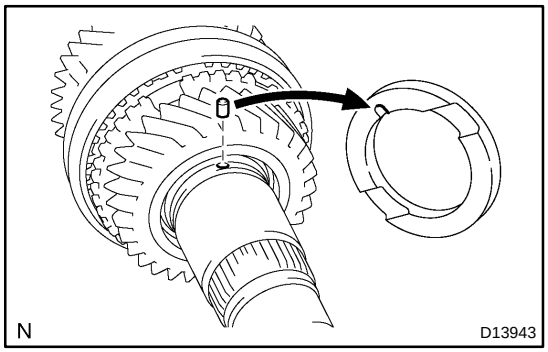

(b) Remove the 3rd gear thrust washer and pin.

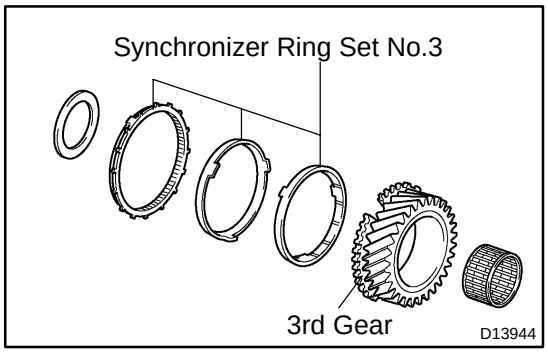

(c) Remove the 3rd gear, synchronizer ring set No.3, needle roller bearing and spacer.

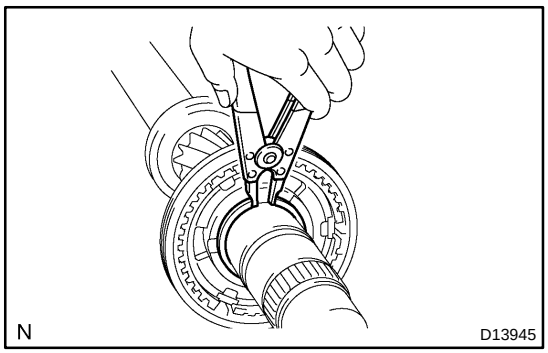

5. REMOVE 4TH GEAR

(a) Using a snap ring expander, remove the snap ring.

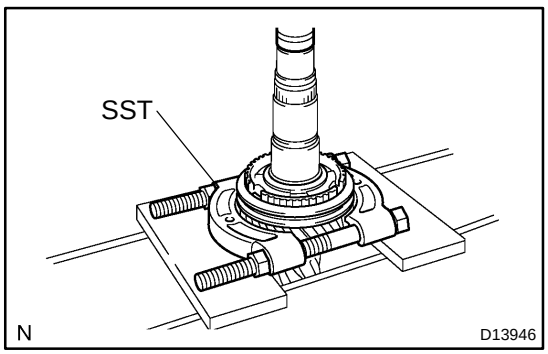

(b) Using SST and a press, remove the clutch hub No.2, hub sleeve, synchronizer ring and 4th gear.
SST 09950−00020

(c) Remove the needle roller bearing.

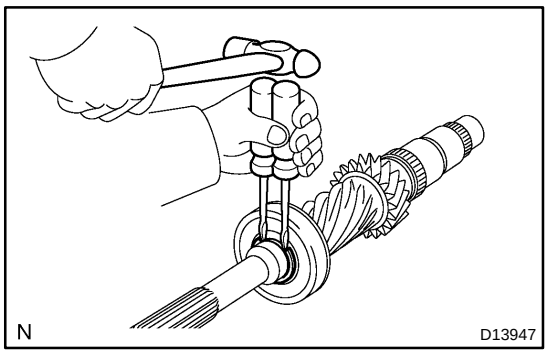

6. REMOVE INPUT SHAFT BEARING

(a) Using 2 screwdrivers and a hammer, remove the snap ring.

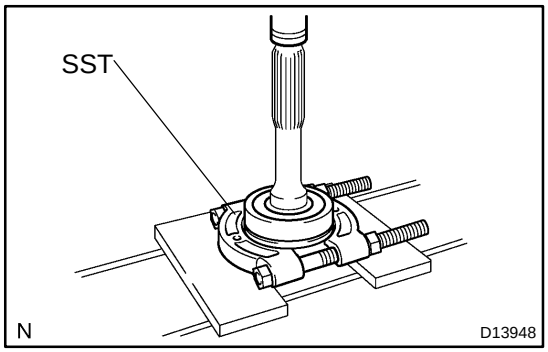

(b) Using SST and a press, remove the input shaft bearing.
SST 09950−00020

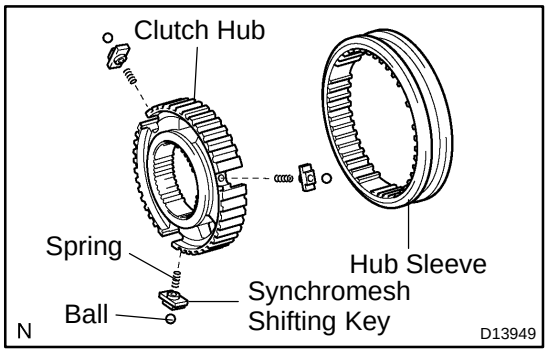

7. REMOVE CLUTCH HUB NO.2 AND NO.3

Remove the clutch hub, 3 synchromesh shifting keys, 3 balls and 3 springs from the hub sleeve.

HINT:

- Be careful not to scatter the balls or springs.
- Use the same procedures to remove the clutch hub No.2 and No.3.

MT0HW−01

INSPECTION

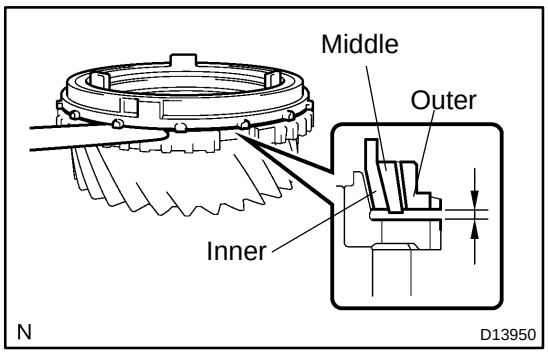

1. INSPECT SYNCHRONIZER RING SET NO.3

(a) Using a feeler gauge, measure the clearance between the synchronizer ring set No.3 and the 3rd gear.

Standard clearance:
Inner: 1.20 to 2.20 mm (0.0472 to 0.0866 in.)
Middle: 0.60 to 1.80 mm (0.0236 to 0.0709 in.)
Outer: 0.80 to 1.80 mm (0.0315 to 0.0709 in.)
Minimum clearance:
Inner: 1.20 mm (0.0472 in.)
Middle: 0.60 mm (0.0236 in.)
Outer: 0.80 mm (0.0315 in.)

If the clearance is less than the minimum, replace the synchronizer ring set No.3.

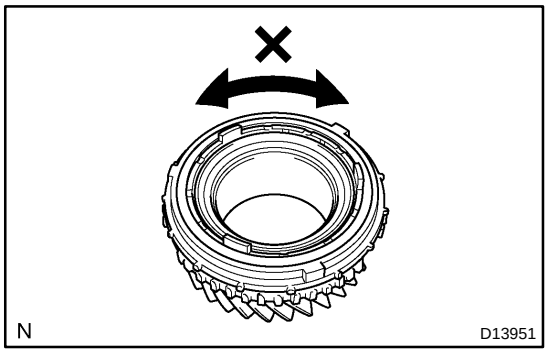

(b) Coat the 3rd gear cone with gear oil. Check the braking effect of the synchronizer ring. Turn the synchronizer ring in one direction while pushing it against the 3rd gear cone. Check that the ring locks.

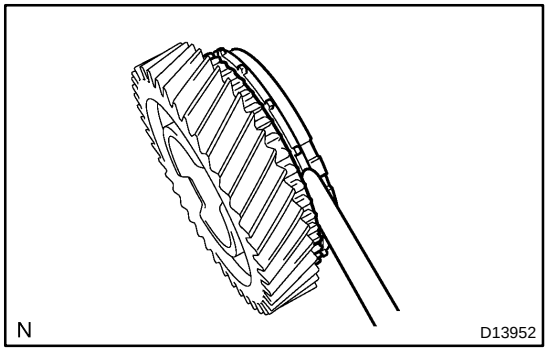

2. INSPECT SYNCHRONIZER RING NO.3

(a) Using a feeler gauge, measure the clearance between the synchronizer ring No.3 and the 4th gear.

Standard clearance:
0.70 to 1.50 mm (0.0276 to 0.0591 in.)
Minimum clearance:
0.70 mm (0.0276 in.)

If the clearance is less than the minimum, replace the synchronizer ring No.3.

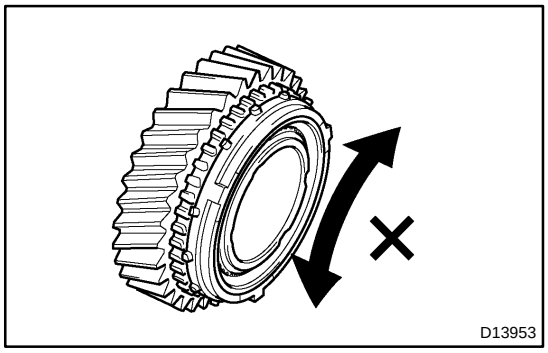

(b) Coat the 4th gear cone with gear oil. Check the braking effect of the synchronizer ring. Turn the synchronizer ring in one direction while pushing it against the 4th gear cone. Check that the ring locks.

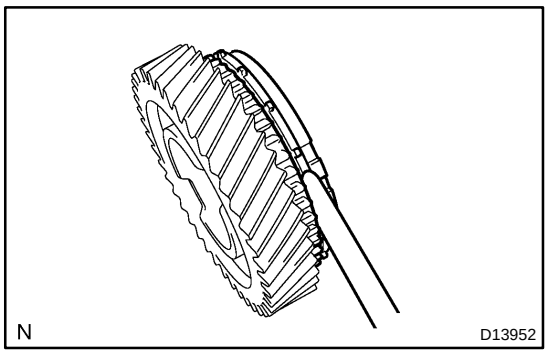

3. INSPECT SYNCHRONIZER RING NO.3

(a) Using a feeler gauge, measure the clearance between the synchronizer ring No.3 and the 6th gear.
Standard clearance:
0.70 to 1.50 mm (0.0276 to 0.0591 in.)
Minimum clearance:
0.70 mm (0.0276 in.)

If the clearance is less than the minimum, replace the synchronizer ring No.3.

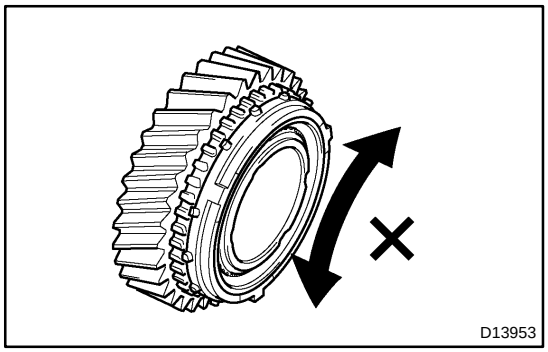

(b) Coat the 6th gear cone with gear oil. Check the braking effect of the synchronizer ring. Turn the synchronizer ring in one direction while pushing it against the 6th gear cone. Check that the ring locks.

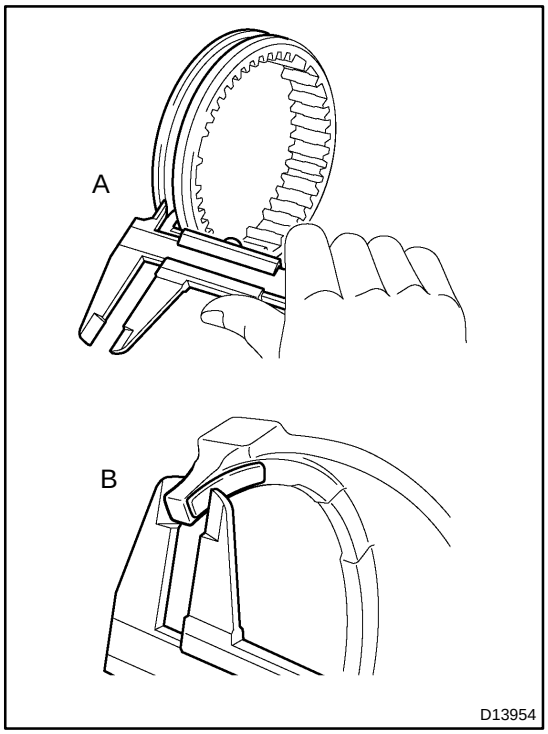

4. INSPECT HUB SLEEVE

(a) Using a vernier caliper, measure the width of the groove of the hub sleeve (A) and thickness of both the gear shift forks No.2 and No.3 (B) as shown in the illustration.
Width of the groove of the hub sleeve (A):
10.5 to 10.6 mm (0.4134 to 0.4173 in.)
Thickness of the gear shift fork (B):
9.76 to 10.24 mm (0.3843 to 0.4031 in.)

(b) Calculate the clearance using the formula below.
Formula:
Clearance = A − B
Standard: 0.26 to 0.84 mm (0.0102 to 0.0331 in.)

If the clearance is not as specified, replace the hub sleeve and gear shift fork.

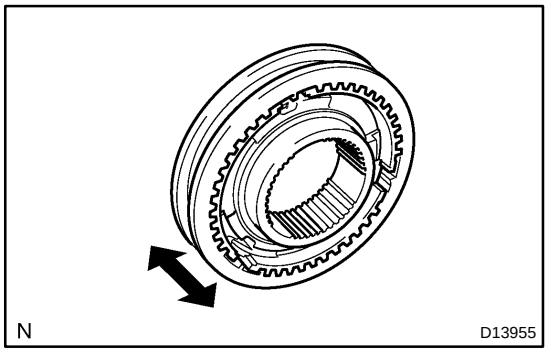

(c) Make sure that the hub sleeve and clutch hub slide smoothly.

If the hub sleeve and clutch hub do not slide smoothly, replace them.

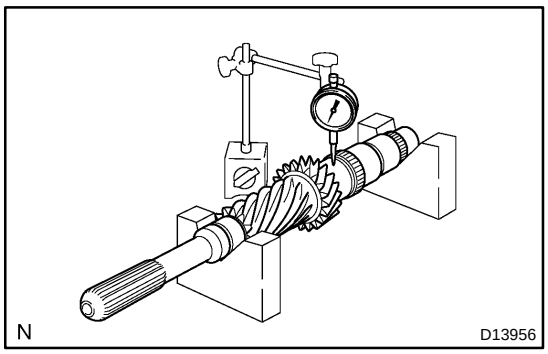

5. INSPECT INPUT SHAFT

(a) Using a dial indicator, measure the shaft runout.

Maximum runout: 0.03 mm (0.0012 in.)

If the runout exceeds the maximum, replace the input shaft.

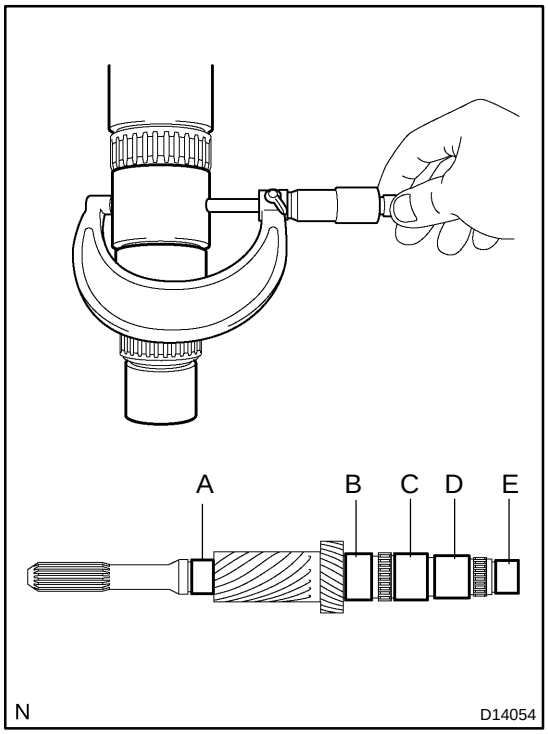

(b) Using a micrometer, measure the outside diameter of the input shaft journal surface.

Standard:

Part	Outside diameter mm (in.)
A	34.002 to 34.015 (1.3387 to 1.3392)
B	44.985 to 45.000 (1.7711 to 1.7717)
C	44.985 to 45.000 (1.7711 to 1.7717)
D	41.985 to 42.000 (1.6530 to 1.6535)
E	32.967 to 32.980 (1.2979 to 1.2984)

Minimum:

Part	Outside diameter mm (in.)
A	34.002 (1.3387)
B	44.985 (1.7711)
C	44.985 (1.7711)
D	41.985 (1.6530)
E	32.967 (1.2979)

If the diameter is less than the minimum, replace the input shaft.

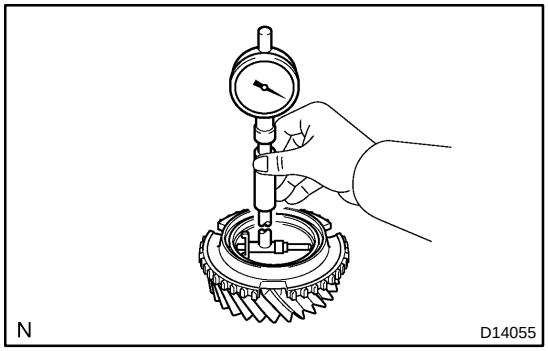

6. INSPECT 3RD GEAR

Using a cylinder gauge, measure the inside diameter of the gear.

Standard inside diameter:
51.015 to 51.040 mm (2.0085 to 2.0094 in.)
Maximum inside diameter:
51.040 mm (2.0094 in.)

If the inside diameter exceeds the maximum, replace the 3rd gear.

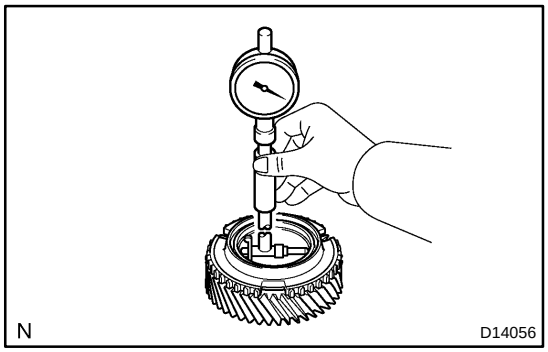

7. INSPECT 4TH GEAR

Using a cylinder gauge, measure the inside diameter of the gear.

Standard inside diameter:
51.015 to 51.040 mm (2.0085 to 2.0094 in.)
Maximum inside diameter:
51.040 mm (2.0094 in.)

If the inside diameter exceeds the maximum, replace the 4th gear.

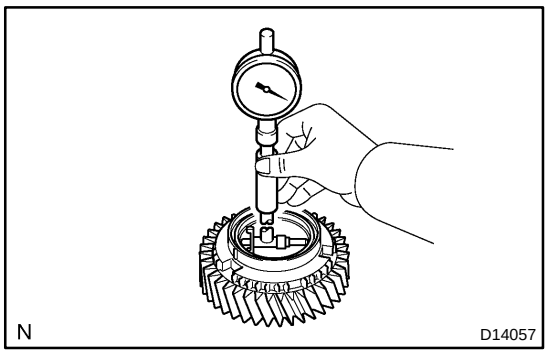

8. INSPECT 6TH GEAR

Using a cylinder gauge, measure the inside diameter of the gear.

Standard inside diameter:
51.015 to 51.040 mm (2.0085 to 2.0094 in.)
Maximum inside diameter:
51.040 mm (2.0094 in.)

If the inside diameter exceeds the maximum, replace the 6th gear.

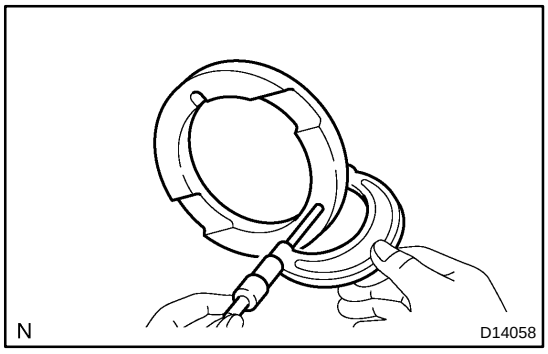

9. INSPECT 3RD GEAR THRUST WASHER

Using a micrometer, measure the thrust washer thickness.

Standard thickness:
7.12 to 7.18 mm (0.2803 to 0.2827 in.)
Minimum thickness:
7.12 mm (0.2803 in.)

If the thickness is less than the minimum, replace the 3rd gear thrust washer.

MT0HX−01

REASSEMBLY

1. INSTALL INPUT SHAFT BEARING

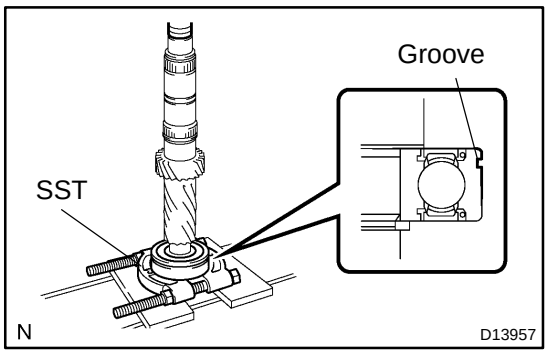

(a) Using SST and a press, install the input shaft bearing to the input shaft.

SST 09950−00020

HINT:

Make sure that the bearing is installed in the direction shown in the illustration.

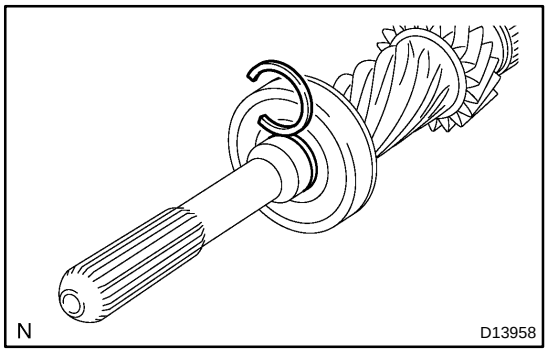

(b) Select a snap ring that allows for the minimum amount of axial play.

Standard clearance: 0.1 mm (0.0039 in.) or less

Mark	Thickness mm (in.)
A	2.65 to 2.70 (0.1043 to 0.1063)
B	2.70 to 2.75 (0.1063 to 0.1083)
C	2.75 to 2.80 (0.1083 to 0.1102)
D	2.80 to 2.85 (0.1102 to 0.1122)
E	2.85 to 2.90 (0.1122 to 0.1142)
F	2.90 to 2.95 (0.1142 to 0.1161)

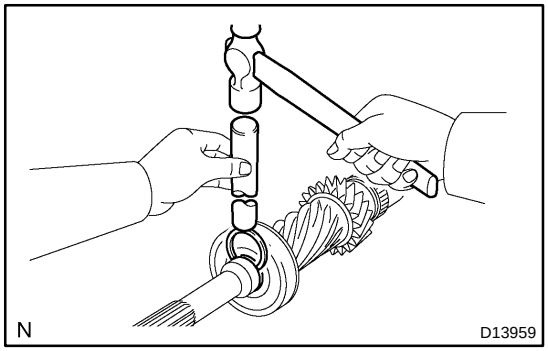

(c) Using a brass bar and hammer, tap in the snap ring.

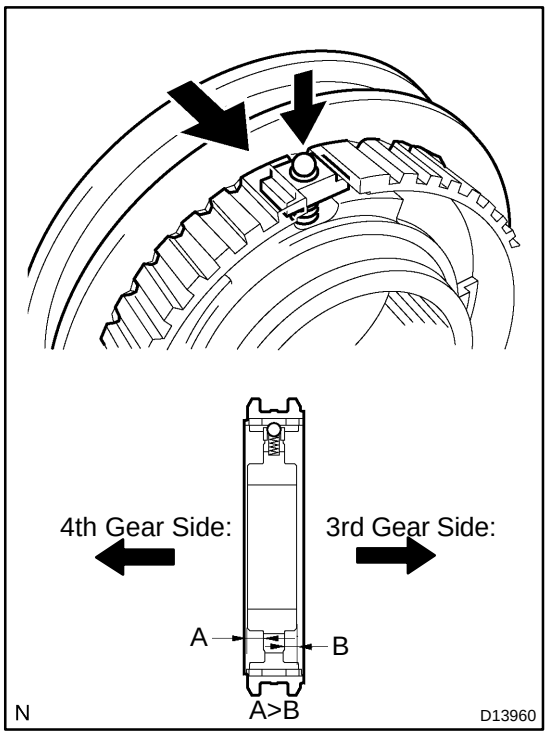

2. ASSEMBLE CLUTCH HUB NO.2

(a) Apply gear oil to the clutch hub sleeve and clutch hub.
(b) Install the clutch hub sleeve to the clutch hub No.2.
(c) Install the 3 shifting keys to the clutch hub.
(d) Install the 3 shifting key springs to the clutch hub.
(e) Place the balls on the holes on the shifting keys, and install the hub sleeve while pushing down the balls.

NOTICE:

Be careful not to scatter the balls.

HINT:

Make sure that the clutch hub No.2 is installed in the direction shown in the illustration.

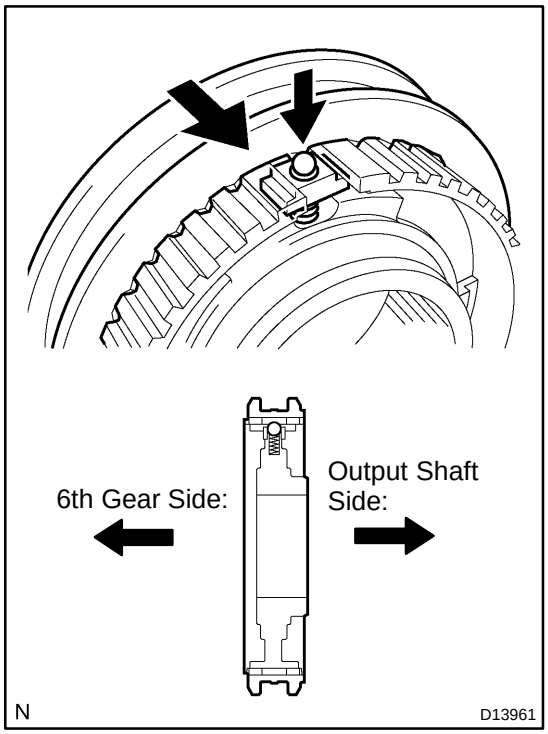

3. ASSEMBLE CLUTCH HUB NO.3

(a) Apply gear oil to the clutch hub sleeve and clutch hub.
(b) Install the clutch hub sleeve to the clutch hub No.3.
(c) Install the 3 shifting keys to the clutch hub.
(d) Install the 3 shifting key springs to the clutch hub.
(e) Place the balls on the holes on the shifting keys, and install the hub sleeve while pushing down the balls.

NOTICE:

Be careful not to scatter the balls.

HINT:

Make sure that the clutch hub No.3 is installed in the direction shown in the illustration.

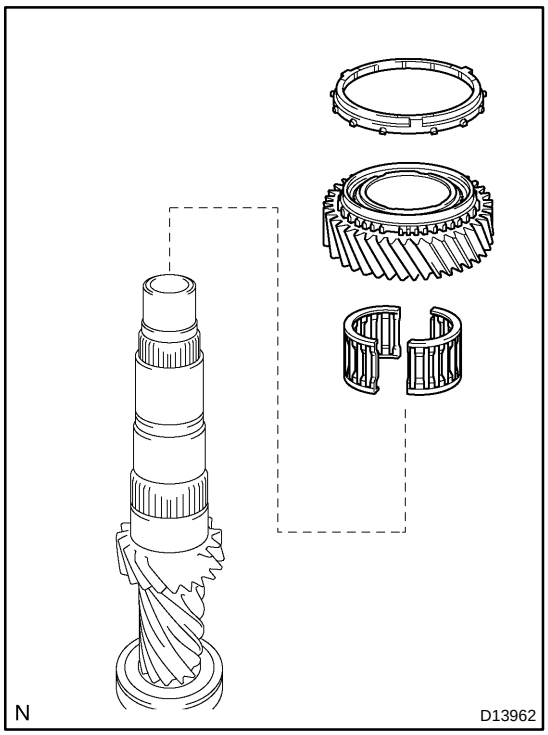

4. INSTALL 4TH GEAR

(a) Apply gear oil to the needle roller bearing and 4th gear taper cone.

(b) Install the needle roller bearing and 4th gear to the input shaft.

(c) Install the synchronizer ring No.3 to the 4th gear.

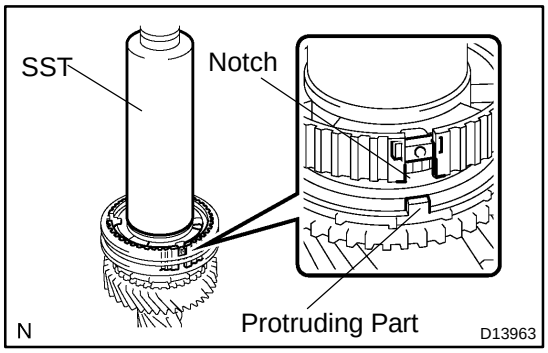

(d) Using SST and a press, install the clutch hub No.2 to the input shaft.

SST 09308−14010

HINT:

Make sure that the protruding part on the synchronizer ring is fitted into the notch or the clutch hub.

(e) Make sure that the gear and synchronizer ring move smoothly.

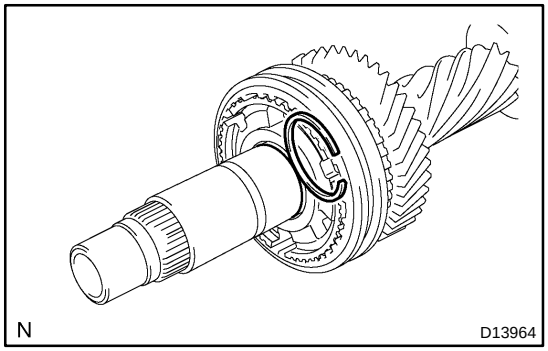

(f) Select a snap ring that allows for the minimum amount of axial play.

Standard clearance: 0.1 mm (0.0039 in.) or less

Mark	Thickness mm (in.)
A	1.77 to 1.82 (0.0697 to 0.0717)
B	1.82 to 1.87 (0.0717 to 0.0736)
C	1.87 to 1.92 (0.0726 to 0.0756)
D	1.92 to 1.97 (0.0756 to 0.0776)
E	1.97 to 2.02 (0.0776 to 0.0795)
F	2.02 to 2.07 (0.0795 to 0.0815)
G	2.07 to 2.12 (0.0815 to 0.0835)

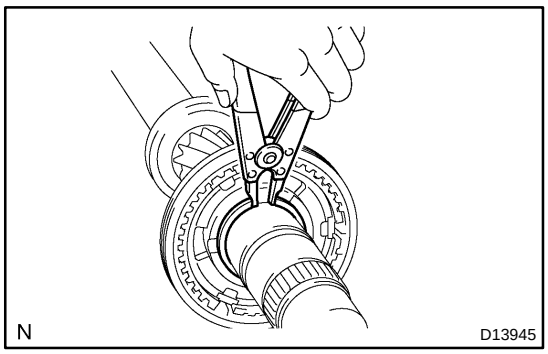

(g) Using a snap ring expander, install the snap ring.
(h) Install the spacer to the input shaft.

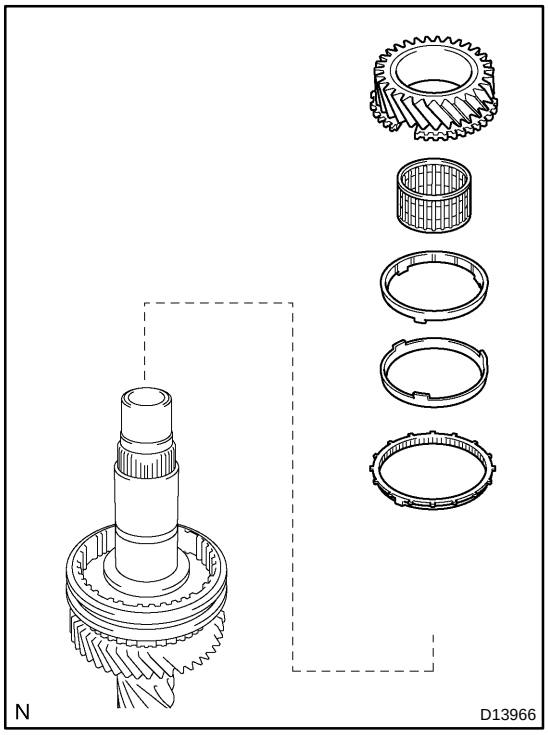

5. INSTALL 3RD GEAR

(a) Apply gear oil to the needle roller bearing and 3rd gear taper cone.
(b) Install the synchronizer ring set No.3 to the clutch hub No.2.
(c) Install the needle roller bearing and 3rd gear to the input shaft.

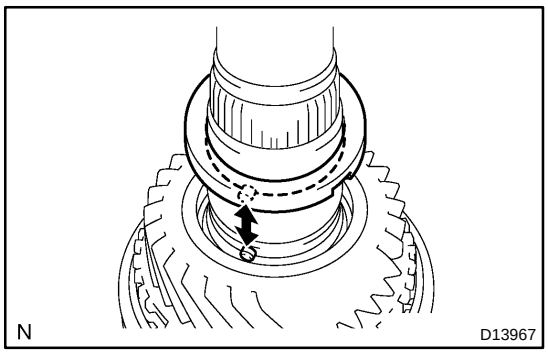

(d) Install the pin and 3rd gear thrust washer to the input shaft.

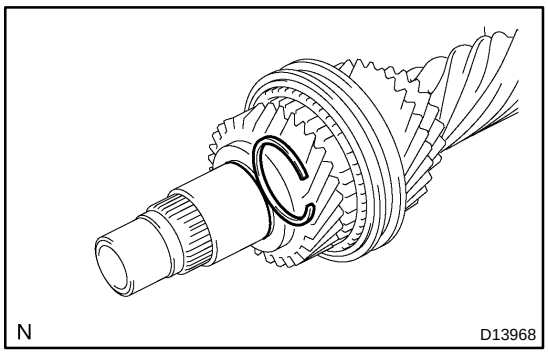

(e) Select a snap ring that allows for the minimum amount of axial play.

Standard clearance: 0.1 mm (0.0039 in.) or less

Mark	Thickness mm (in.)
A	2.07 to 2.12 (0.0815 to 0.0835)
B	2.12 to 2.17 (0.0835 to 0.0854)
C	2.17 to 2.22 (0.0854 to 0.0874)
D	2.22 to 2.27 (0.0874 to 0.0894)
E	2.27 to 2.32 (0.0894 to 0.0913)
F	2.32 to 2.37 (0.0913 to 0.0933)

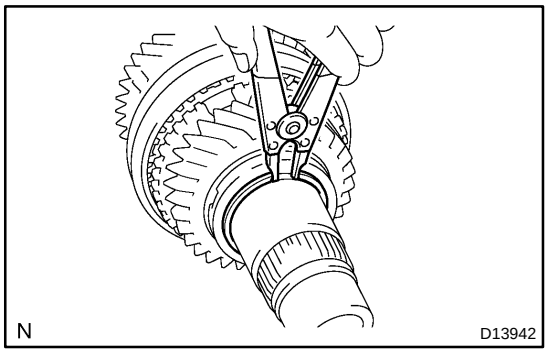

(f) Using a snap ring expander, install the snap ring.

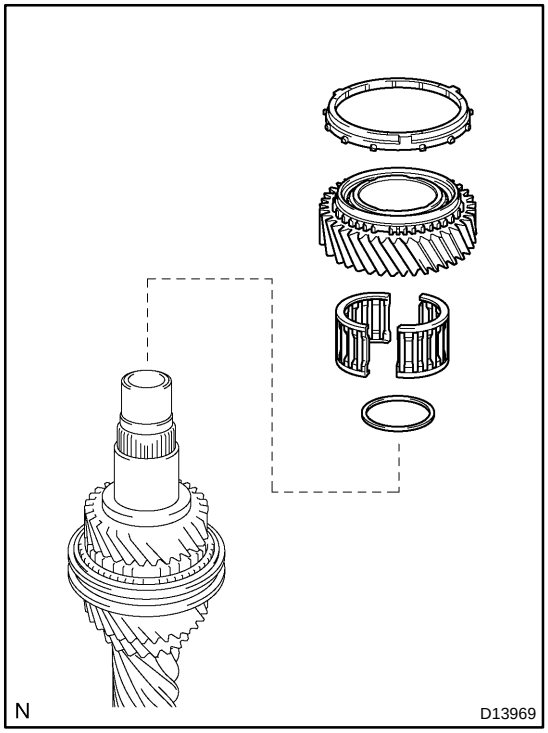

6. INSTALL 6TH GEAR

(a) Apply gear oil to the needle roller bearing and 6th gear taper cone.

(b) Install the ring, needle roller bearing and 6th gear to the input shaft.

(c) Install the synchronizer ring to the 6th gear.

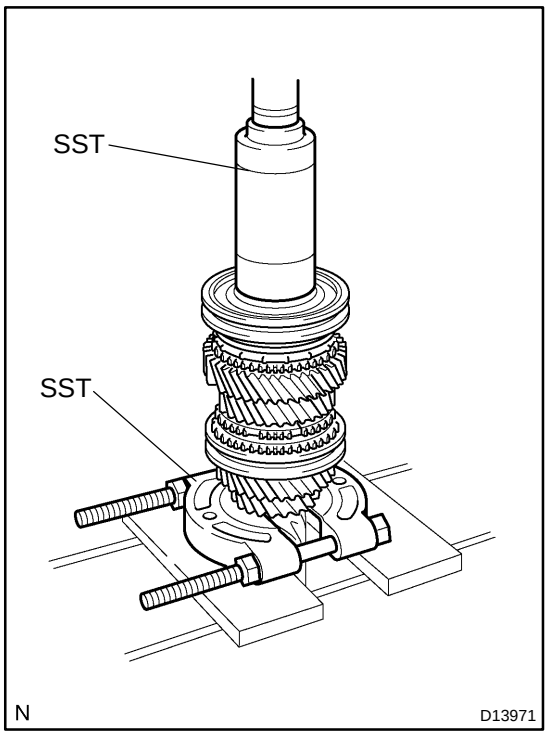

(d) Using SST and a press, install the clutch hub No.3 to the input shaft.
SST 09309−37010, 09950−00020

(e) Make sure that the gear and synchronizer ring move smoothly.

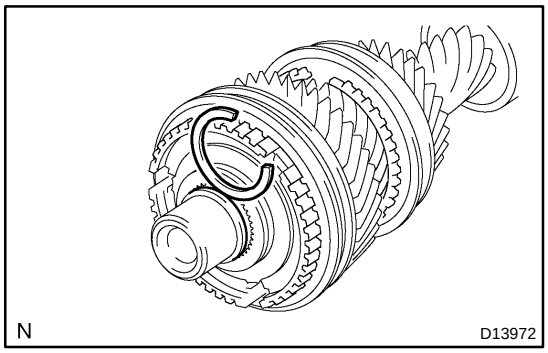

(f) Select a snap ring that allow for the minimum amount of axial play.
Standard clearance: 0.1 mm (0.0039 in.) or less

Mark	Thickness mm (in.)
A	2.10 to 2.15 (0.0827 to 0.0846)
B	2.15 to 2.20 (0.0846 to 0.0866)
C	2.20 to 2.25 (0.0866 to 0.0886)
D	2.25 to 2.30 (0.0886 to 0.0906)
E	2.30 to 2.35 (0.0906 to 0.0925)
F	2.35 to 2.40 (0.0925 to 0.0945)
G	2.40 to 2.45 (0.0945 to 0.0965)

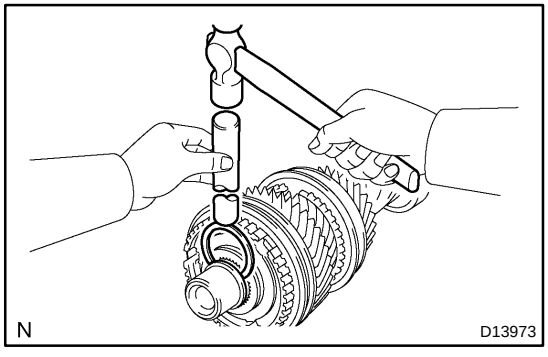

(g) Using a brass bar and hammer, install the snap ring.

MANUAL TRANSMISSION ASSEMBLY

MT0HR−01

COMPONENTS

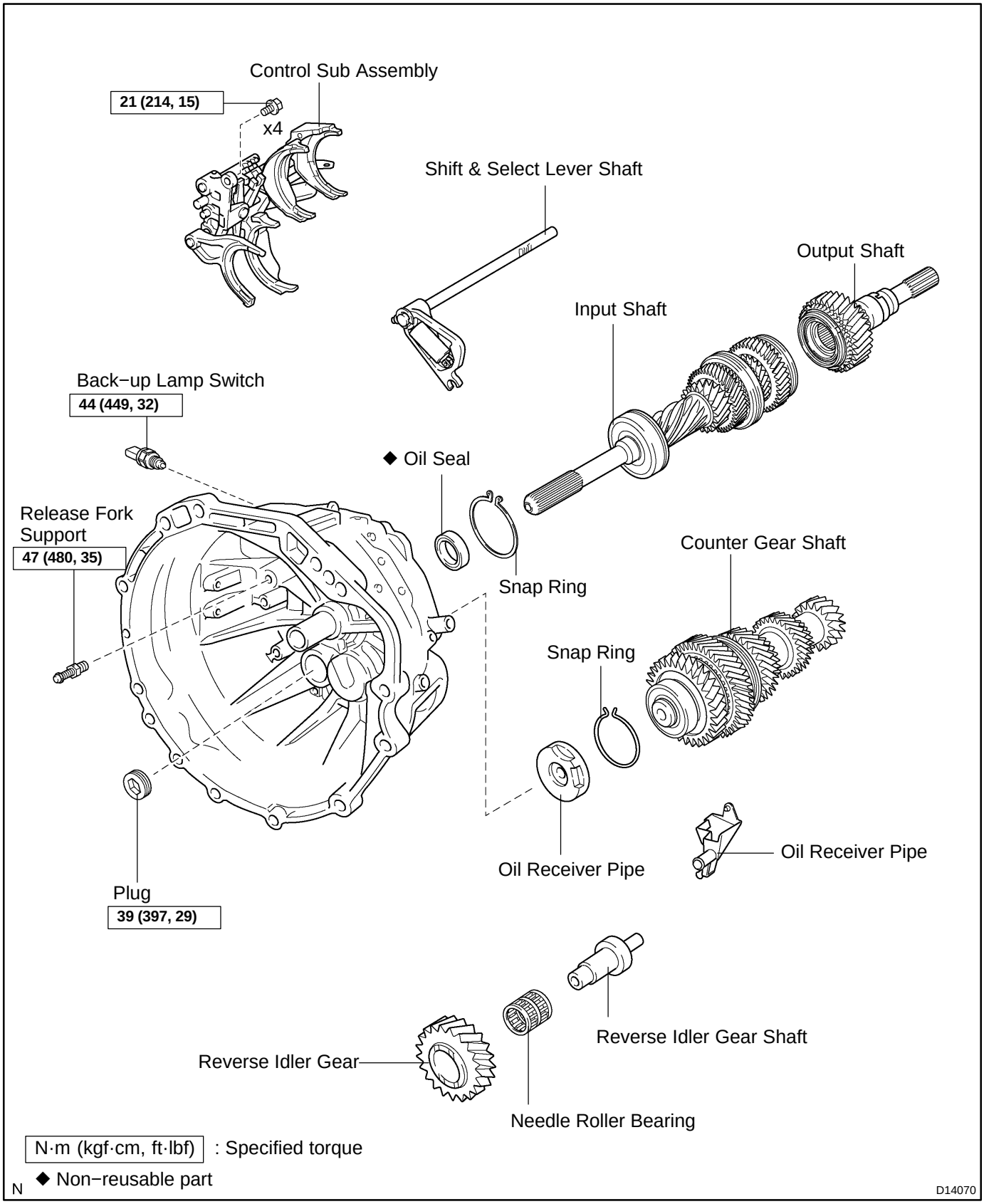

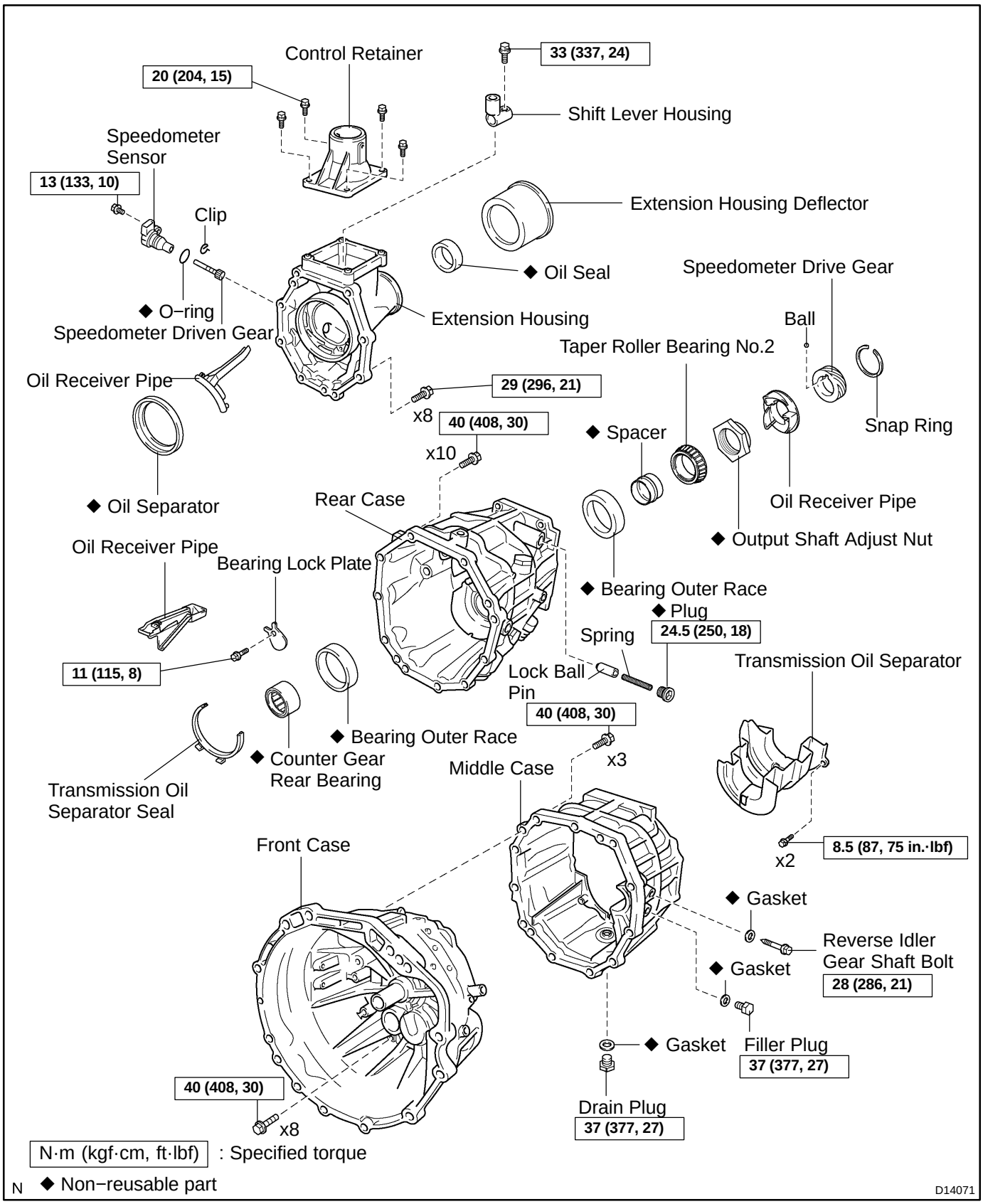
Control Retainer
20 (204, 15)
33 (337, 24)
Shift Lever Housing
Speedometer Sensor
13 (133, 10)
Clip
Extension Housing Deflector
◆ Oil Seal
Speedometer Drive Gear
◆ O−ring
Speedometer Driven Gear
Extension Housing
Ball
Taper Roller Bearing No.2
Oil Receiver Pipe
29 (296, 21)
x8
40 (408, 30)
x10
◆ Spacer
Snap Ring
◆ Oil Separator
Rear Case
Oil Receiver Pipe
◆ Output Shaft Adjust Nut
Oil Receiver Pipe
Bearing Lock Plate
◆ Bearing Outer Race
◆ Plug
Spring
24.5 (250, 18)
Transmission Oil Separator
11 (115, 8)
Lock Ball
Pin
40 (408, 30)
x3
◆ Bearing Outer Race
◆ Counter Gear Rear Bearing
Middle Case
Transmission Oil Separator Seal
8.5 (87, 75 in.·lbf)
x2
Front Case
◆ Gasket
Reverse Idler Gear Shaft Bolt
28 (286, 21)
◆ Gasket
◆ Gasket
Filler Plug
37 (377, 27)
40 (408, 30)
x8
Drain Plug
37 (377, 27)
N·m (kgf·cm, ft·lbf) : Specified torque
◆ Non−reusable part
N
D14071

MT0HS−01

DISASSEMBLY

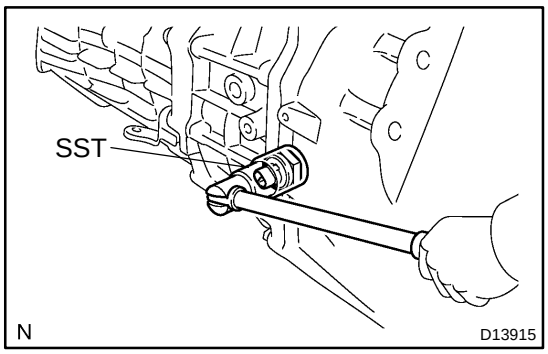

1. REMOVE BACK−UP LAMP SWITCH

Using SST, remove the back−up lamp switch.

SST 09817−16011

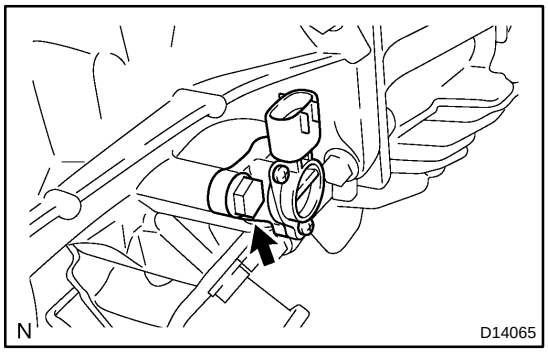

2. REMOVE SPEEDOMETER DRIVEN GEAR

(a) Remove the bolt and speedometer sensor.

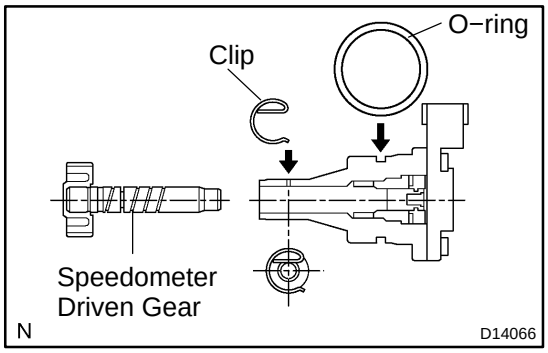

(b) Remove the clip from the speedometer sensor.

(c) Remove the driven gear from the speedometer sensor.

(d) Remove the O−ring from the speedometer sensor.

(e) Check the teeth of the speedometer driven gear.

If the driven gear is damaged, replace it.

3. REMOVE EXTENSION HOUSING DEFLECTOR

Using a plastic hammer, remove the deflector.

4. REMOVE DRAIN PLUG

5. REMOVE FILLER PLUG

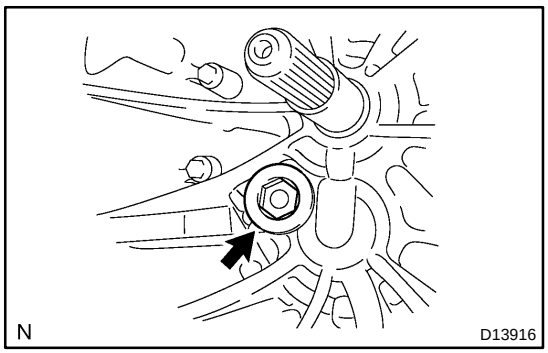

6. REMOVE PLUG

Remove the plug from the front case.

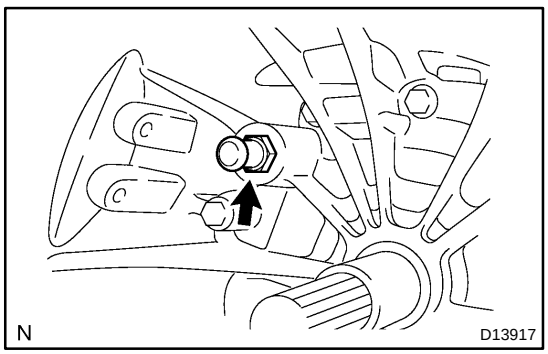

7. REMOVE RELEASE FORK SUPPORT

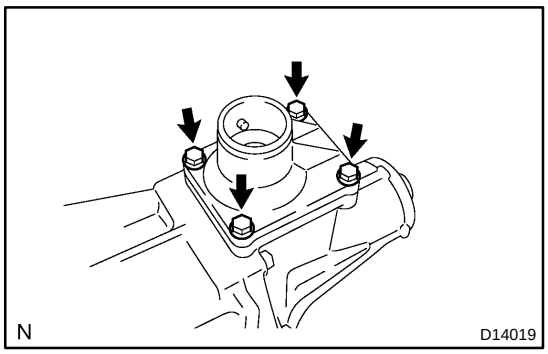

8. REMOVE CONTROL RETAINER

(a) Remove the 4 bolts from the control retainer.

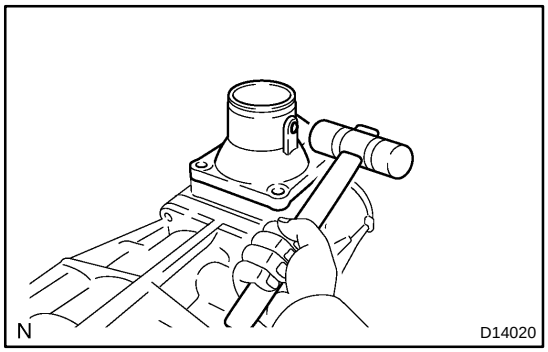

(b) Using a plastic hammer, remove the control retainer.

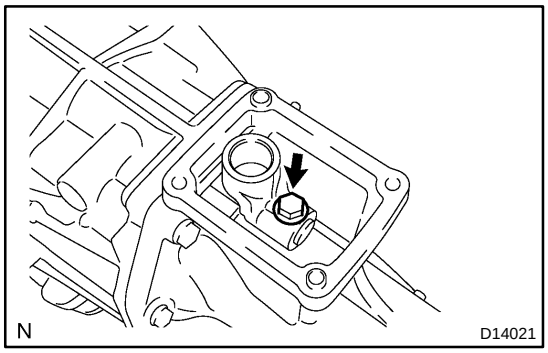

9. REMOVE EXTENSION HOUSING

(a) Remove the bolt from the shift lever housing.

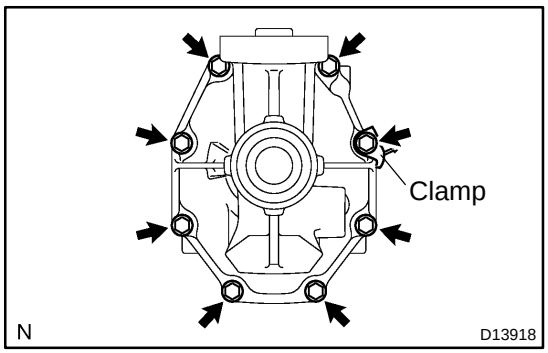

(b) Remove the 8 bolts and clamp.

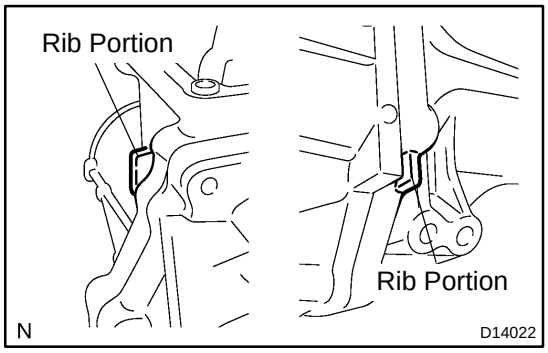

(c) Using a plastic hammer, carefully tap out the extension housing.

HINT:

Place the brass bar against the rib portion of the case.

(d) Remove the shift lever housing.

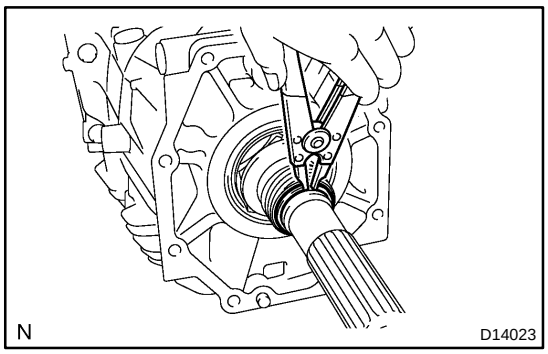

10. REMOVE SPEEDOMETER DRIVE GEAR

(a) Using a snap ring expander, remove the snap ring.

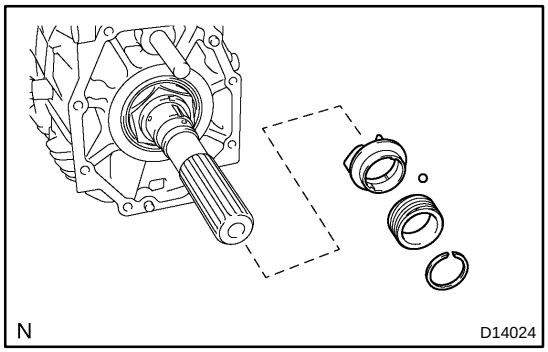

(b) Remove the speedometer drive gear, ball and oil receiver pipe.

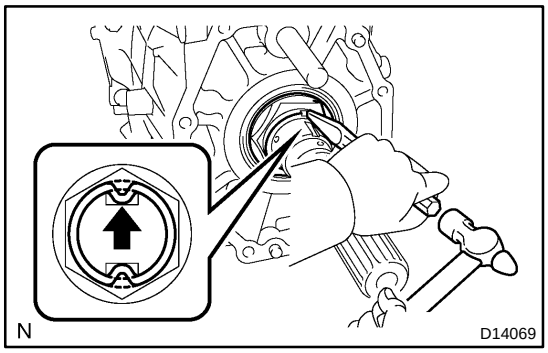

11. REMOVE OUTPUT SHAFT ADJUST NUT

(a) Using a chisel and hammer, unstake the nut.

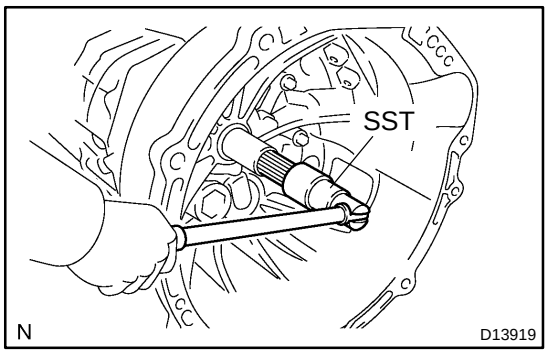

(b) Shift to fifth gear, and then hold the input shaft with SST.
SST 09556−16030

(c) Using a belt and wooden block, fasten the transmission to the work bench.

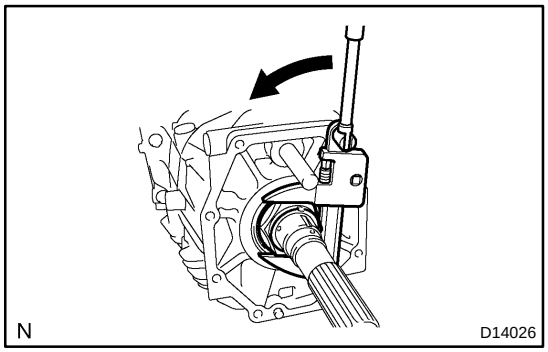

(d) Using SST, remove the nut from the output shaft.
SST 09922−10010

(e) Remove the belt and wooden block from the transmission.

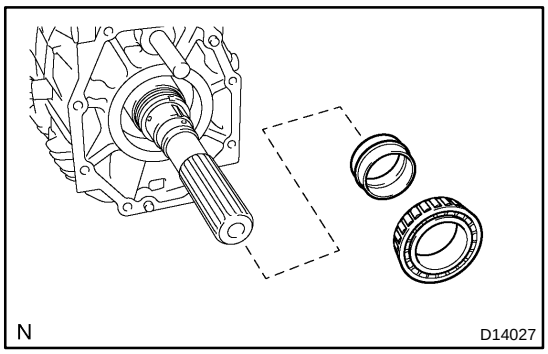

(f) Remove the taper roller bearing No.2 and spacer.

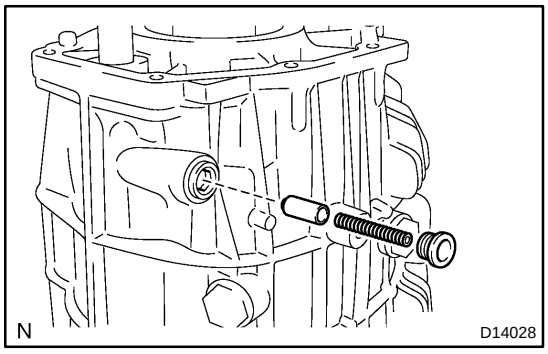

12. REMOVE REAR CASE

(a) Remove the plug, spring and lock ball pin.

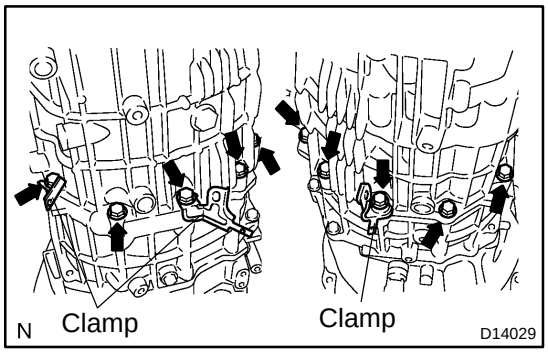

(b) Remove the 10 bolts and 3 clamps.

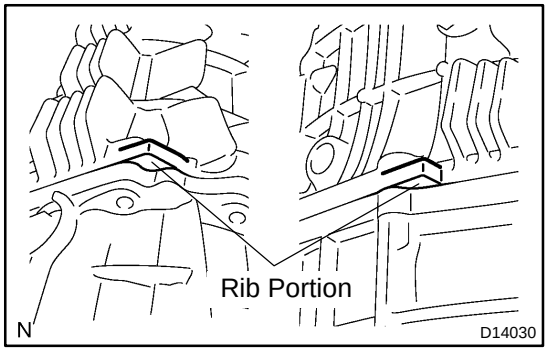

(c) Using a plastic hammer, carefully tap out the rear case.

HINT:

Place the brass bar against the rib portion of the case.

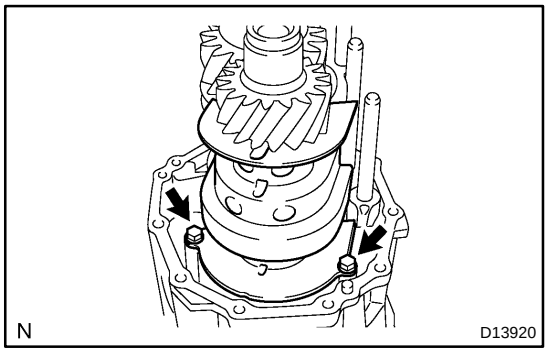

13. REMOVE TRANSMISSION OIL SEPARATOR

Remove the 2 bolts and transmission oil separator.

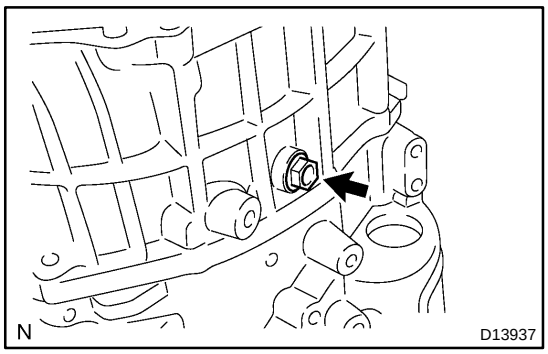

14. REMOVE REVERSE IDLER GEAR SHAFT BOLT

Remove the reverse idler gear shaft bolt and gasket.

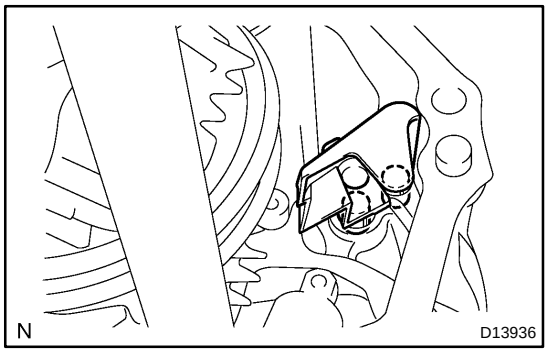

15. REMOVE MIDDLE CASE

(a) Remove the oil receiver pipe from the middle case.

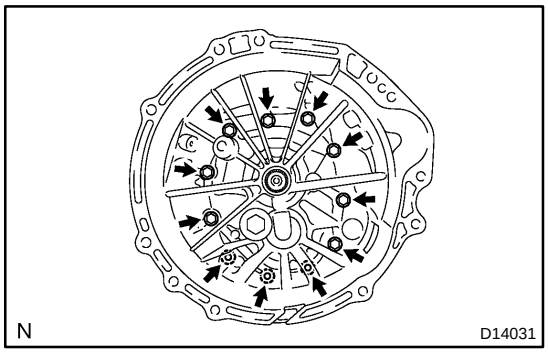

(b) Remove the 11 bolts from the middle case.

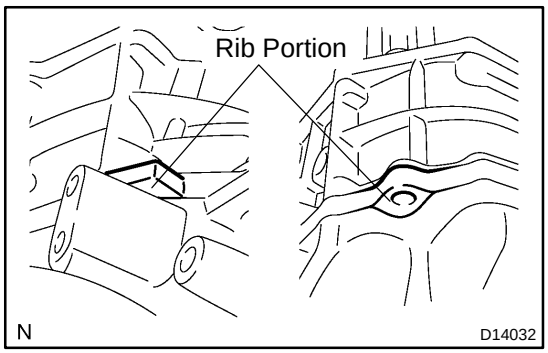

(c) Using a plastic hammer, carefully tap out the middle case.

HINT:

Place the brass bar against the rib portion of the case.

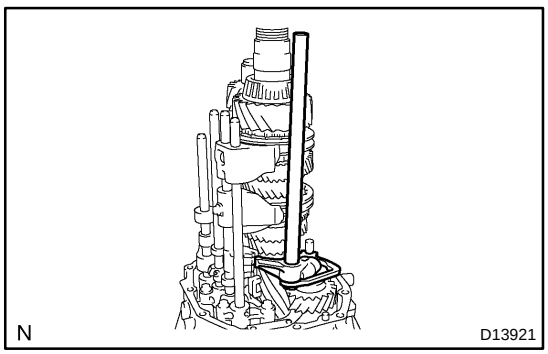

16. REMOVE SHIFT & SELECT LEVER SHAFT

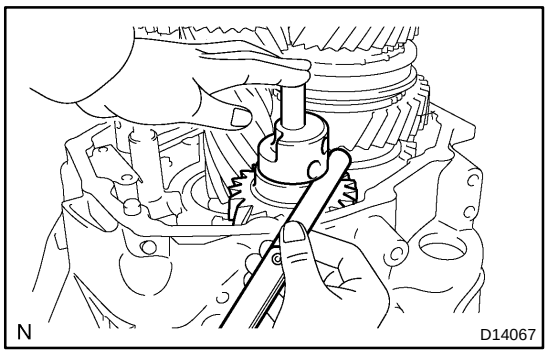

17. INSPECT REVERSE IDLER GEAR THRUST CLEARANCE

Using a feeler gauge, measure the thrust clearance.

Standard clearance:
0.10 to 0.55 mm (0.0039 to 0.0217 in.)
Maximum clearance:
0.55 to (0.0217 in.)

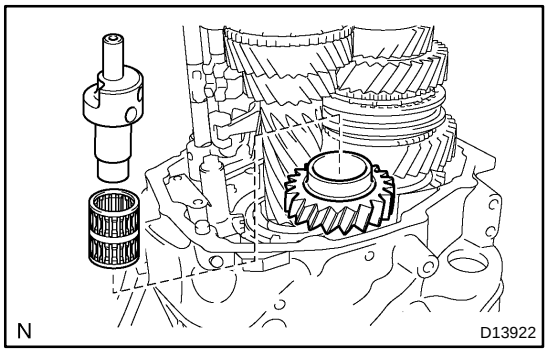

18. REMOVE REVERSE IDLER GEAR

Remove the reverse idle gear shaft, needle roller bearing and reverse idler gear.

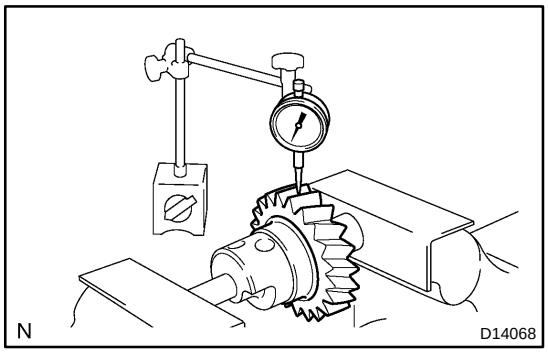

19. INSPECT REVERSE IDLER GEAR RADIAL CLEARANCE

Using a dial indicator, measure the radial clearance.

Standard clearance:
0.015 to 0.050 mm (0.0006 to 0.0020 in.)
Maximum clearance:
0.050 mm (0.0020 in.)

If the clearance exceeds the maximum, replace the needle roller bearing.

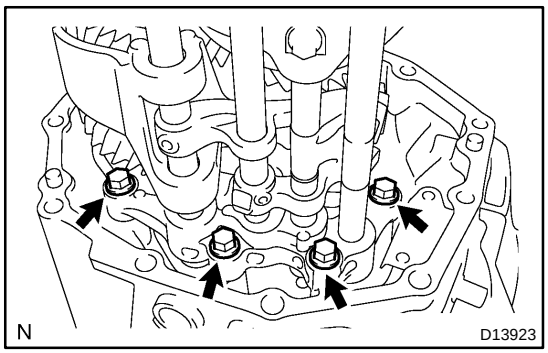

20. REMOVE OUTPUT SHAFT, INPUT SHAFT, COUNTER GEAR SHAFT AND CONTROL SUB ASSEMBLY

(a) Remove the 4 bolts from the control sub assembly.

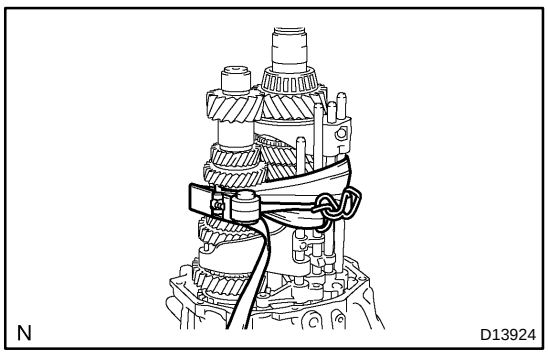

(b) Securely bind the output shaft, input shaft, counter gear shaft and control sub assembly together with a belt, etc.

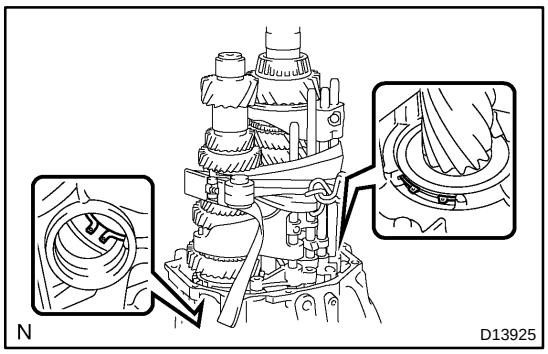

(c) While expanding the 2 snap rings, raise the output shaft, input shaft, counter gear shaft and control sub assembly.

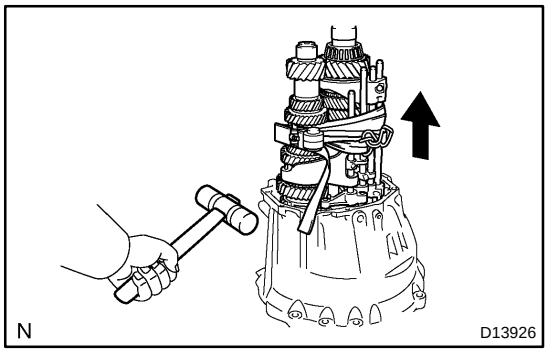

(d) While tapping on the front case with a plastic hammer, remove the output shaft, input shaft, counter gear shaft and control sub assembly as a unit.

NOTICE:

Do not strike the front case with excessive force. If the output shaft, input shaft, counter gear shaft and control sub assembly are subjected to a strong impact, the balls or springs may fly out of the clutch hubs.

(e) Separate the output shaft, input shaft, counter gear shaft and control sub assembly.

21. DISASSEMBLE EXTENSION HOUSING

(a) Using SST, remove the oil separator.
SST 09308−55010, 09520−00031

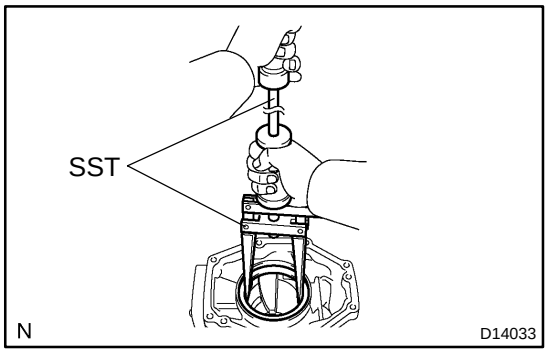

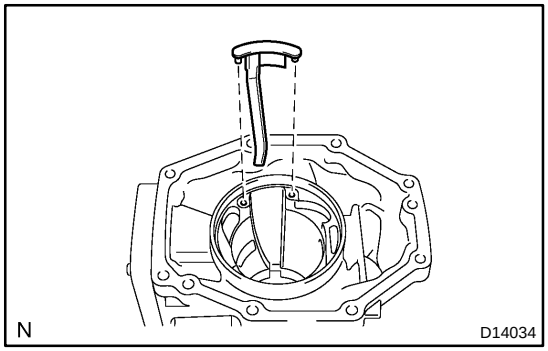

(b) Remove the oil receiver pipe.

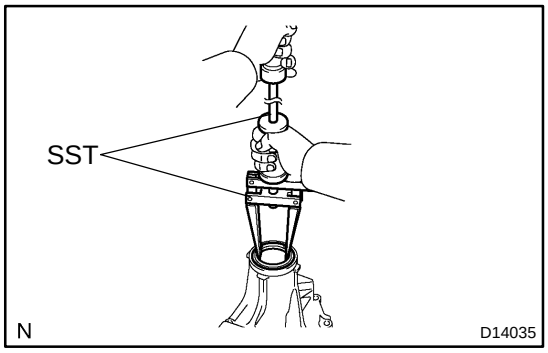

(c) Using SST, remove the oil seal.
SST 09308−55010, 09520−00031

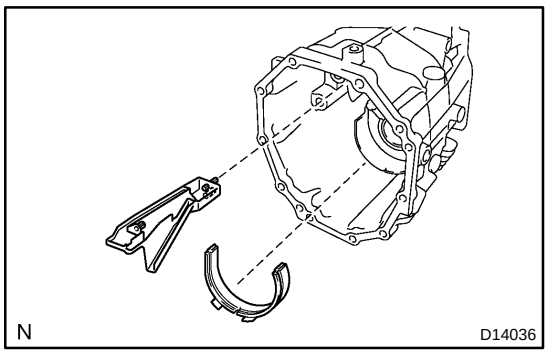

22. DISASSEMBLE REAR CASE

(a) Remove the transmission oil separator seal from the rear case.

(b) Remove the oil receiver pipe from the rear case.

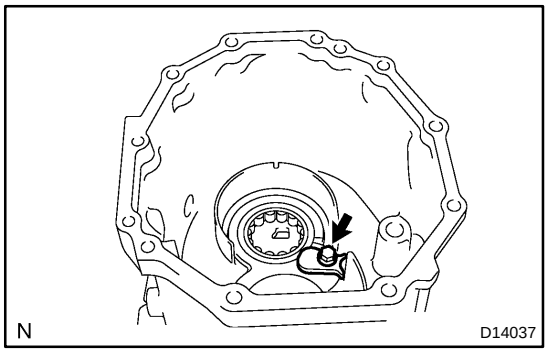

(c) Remove the bolt and bearing lock plate from the rear case.

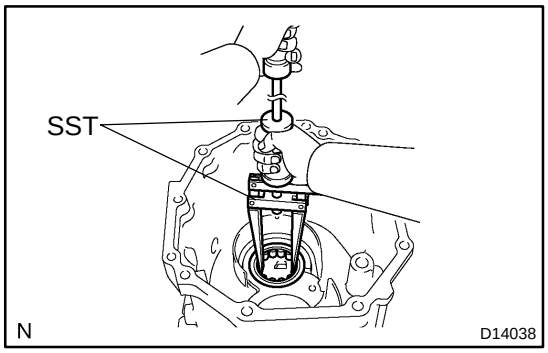

(d) Using SST, remove the counter gear rear bearing.
SST 09308−55010, 09520−00031

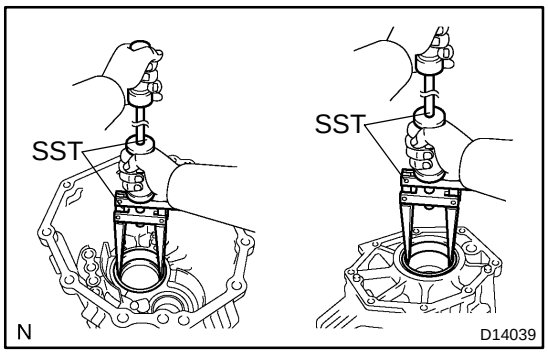

(e) Using SST, remove the 2 bearing outer races.
SST 09308−55010, 09520−00031

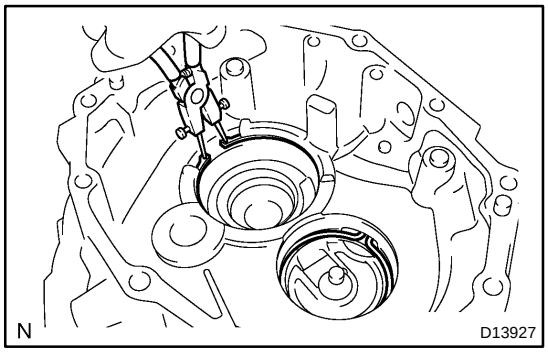

23. DISASSEMBLE FRONT CASE

(a) Using snap ring pliers, remove the 2 snap rings.

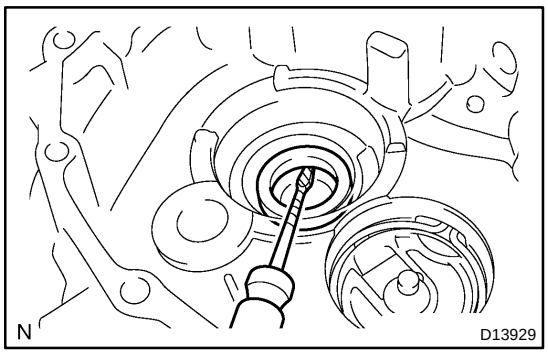

(b) Using a screwdriver, remove the oil seal.

HINT:

Tape the screwdriver tip before use.

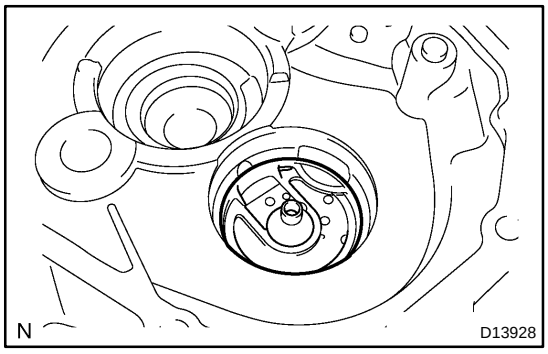

(c) Remove the oil receiver pipe.

MT0HT−01

REASSEMBLY

1. REASSEMBLE FRONT CASE

(a) Install the oil receiver pipe to the front case.

HINT:

Make sure that the protruding part on the oil receiver pipe is fitted into the notch on the front case.

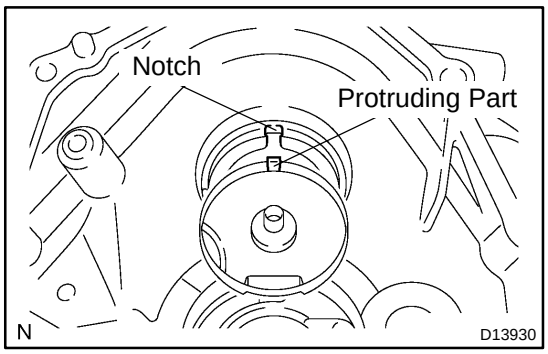

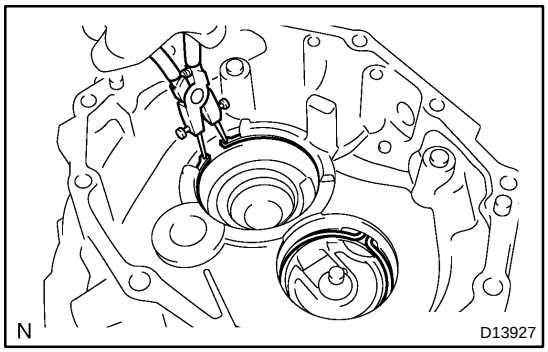

(b) Using snap ring pliers, install the 2 snap rings.

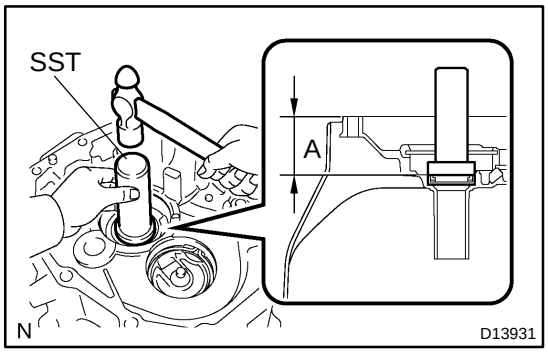

(c) Using SST and a hammer, tap in a new oil seal to the clutch housing until dimension A falls within the specified range.

SST 09388−40010

Dimension A: 60.0 to 60.8 mm (2.362 to 2.394 in.)

(d) Apply gear oil to the lip of the oil seal.

2. REASSEMBLE REAR CASE

(a) Using SST and a press, press in 2 new bearing outer races.

SST 09950−60020 (09951−00790, 09951−00850) 09950−70010 (09951−07100, 09951−07360)

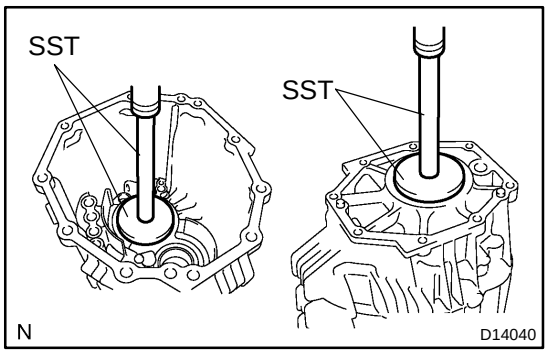

(b) Using SST and a press, press in a new counter gear rear bearing.

SST 09950−60010 (09951−00650), 09950−70010 (09951−07360)

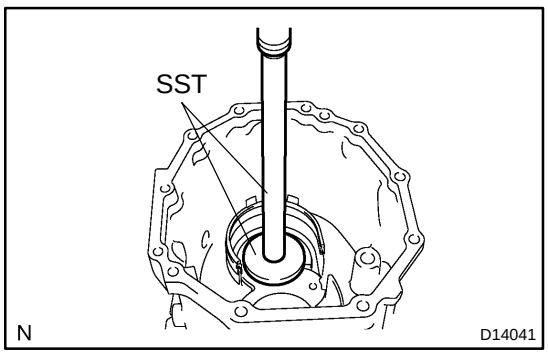

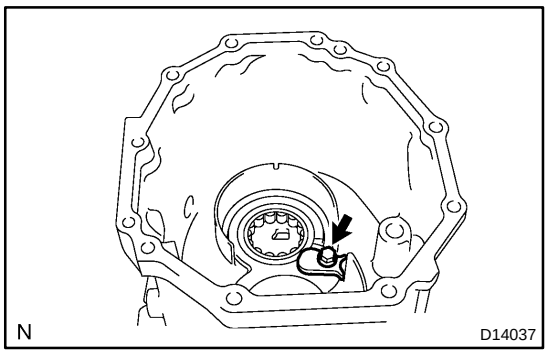

(c) Install the bearing lock plate with the bolt.
Torque: 11 N·m (115 kgf·cm, 8 ft·lbf)

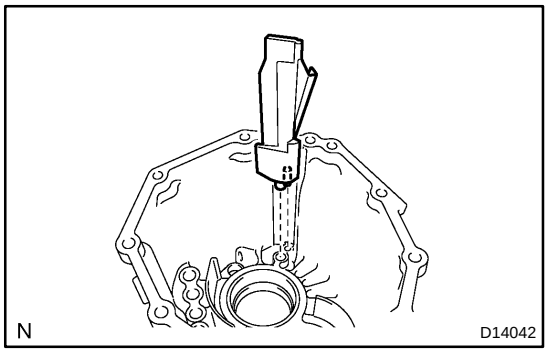

(d) Install the oil receiver pipe to the rear case.
HINT:
Make sure that the protruding part on the oil receiver pipe is fitted into the hole on the rear case.

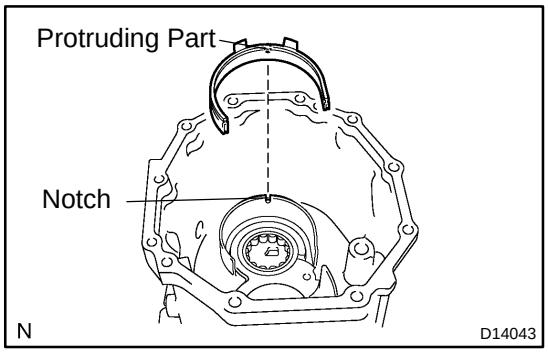

(e) Install the transmission oil separator seal to the rear case.
HINT:
Make sure that the protruding part on the transmission oil separator seal is fitted into the notch on the rear case.

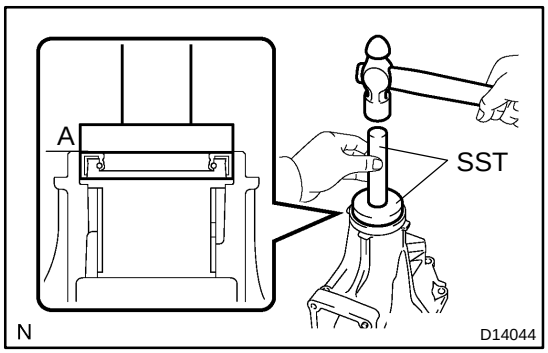

3. REASSEMBLE EXTENSION HOUSING

(a) Using SST and a hammer, tap in a new oil seal to the extension housing until dimension A falls within the specified range.
SST 09950−60020 (09951−00640), 09950−70010 (09951−07100)
Dimension A: −0.5 to 0.5 mm (−0.0197 to 0.0197 in.)

(b) Apply gear oil to the lip of the oil seal.

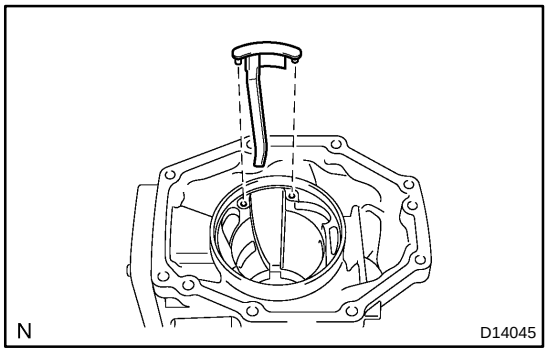

(c) Install the oil receiver pipe to the extension housing.
HINT:
Make sure that the protruding parts on the oil receiver pipe is fitted into the holes on the extension housing.

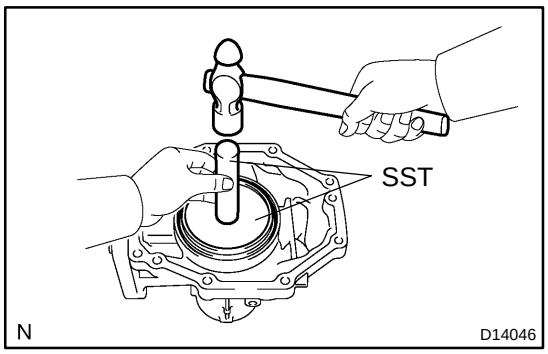

(d) Using SST and a hammer, install a new oil separator.
SST 09255−10012, 09950−70010 (09951−07100)

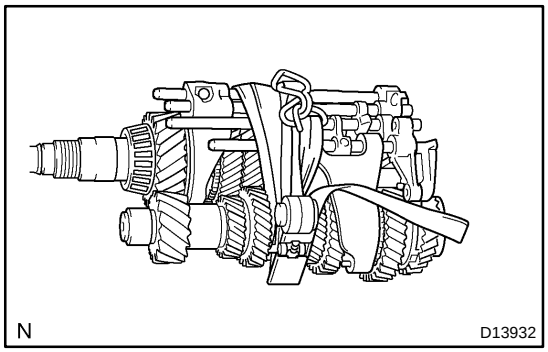

4. INSTALL OUTPUT SHAFT, INPUT SHAFT, COUNTER GEAR SHAFT AND CONTROL SUB ASSEMBLY

(a) Apply gear oil to the sliding surfaces and gear teeth.

(b) Temporarily assembly the output shaft, input shaft, counter gear shaft and control sub assembly, and bind them together with a belt, etc.

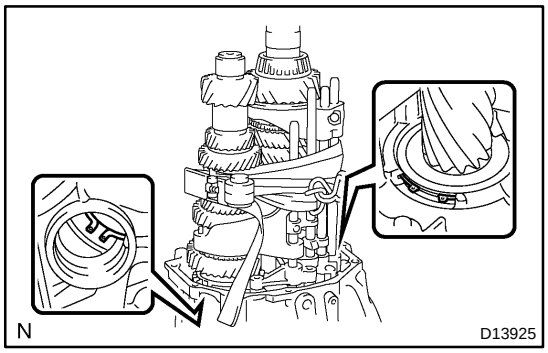

(c) While expanding the 2 snap rings with snap ring pliers, install the output shaft, input shaft, counter gear shaft and control sub assembly.

HINT:

Make sure that the snap rings are securely fitted into the grooves on the front bearings of the input shaft and counter gear shaft.

(d) Remove the device binding the output shaft, input shaft, counter gear shaft and control sub assembly.

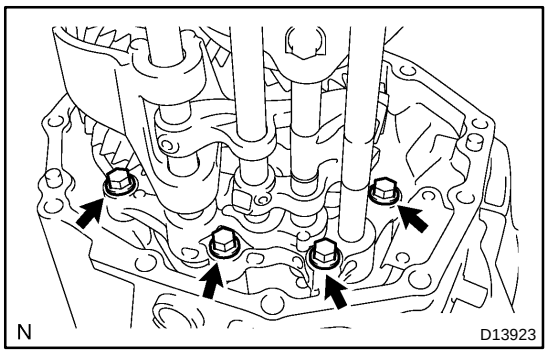

(e) Install the 4 bolts to the control sub assembly.
Torque: 21 N·m (214 kgf·cm, 15 ft·lbf)

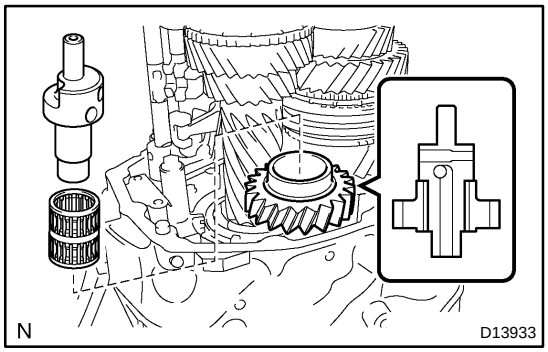

5. INSTALL REVERSE IDLER GEAR

(a) Install the reverse idler gear, needle roller bearing and reverse idler gear shaft.

HINT:

Make sure that the reverse idler gear is installed in the direction shown in the illustration.

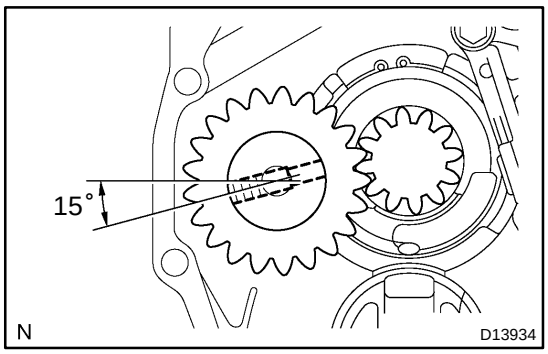

NOTICE:
Make sure that the screw hole of the reverse idler shaft is positioned as shown in the illustration.

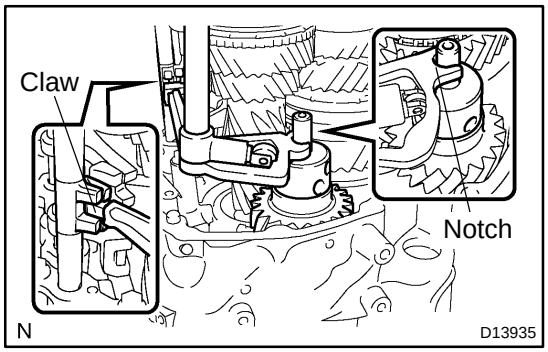

6. INSTALL SHIFT & SELECT LEVER SHAFT

Fit the notch of the shift & select cam to the reverse idler gear shaft, and the claw to the gap on the control shaft assembly to install the shift & select lever shaft.

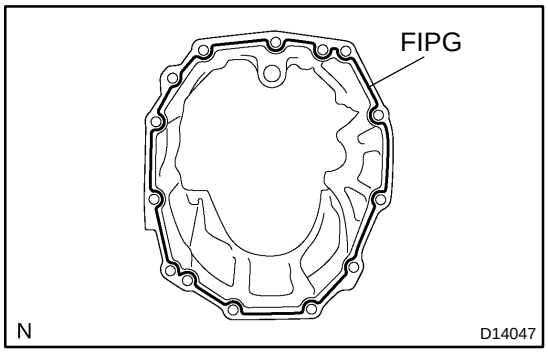

7. INSTALL MIDDLE CASE

(a) Apply FIPG to the middle case as shown in the illustration.
FIPG:
Part No. 08826−00090, THREE BOND 1281 or equivalent

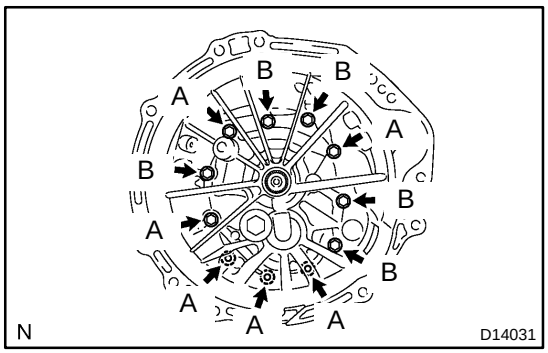

(b) Install the middle case to the front case with the 11 bolts.
Torque: 40 N·m (408 kgf·cm, 30 ft·lbf)
Bolt length:
Bolt A: 40 mm (1.57 in.)
Bolt B: 80 mm (3.15 in.)

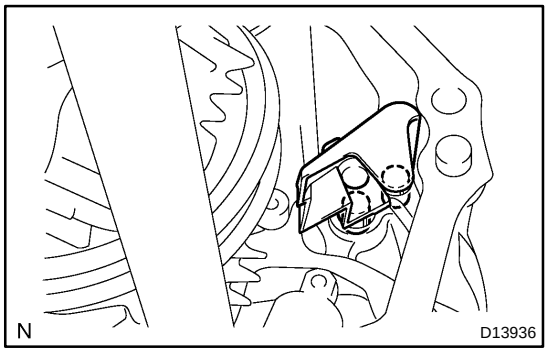

(c) Install the oil receiver pipe to the middle case.

HINT:

Make sure that the protruding parts on the receiver pipe are fitted into the holes on the middle case.

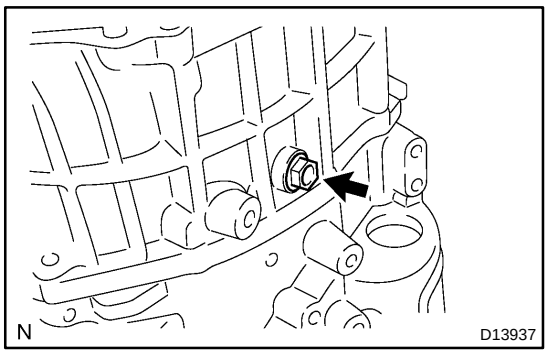

8. INSTALL REVERSE IDLER GEAR SHAFT BOLT

Install a new gasket and the reverse idler gear shaft bolt.

Torque: 28 N·m (286 kgf·cm, 21 ft·lbf)

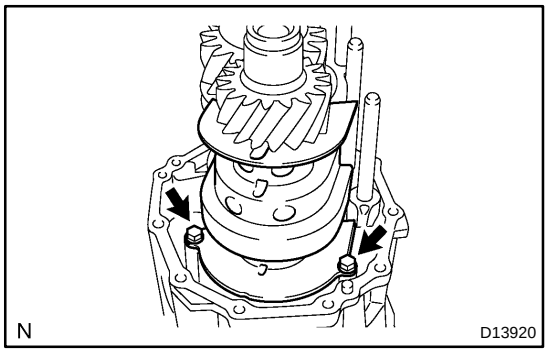

9. INSTALL TRANSMISSION OIL SEPARATOR

Install the transmission oil separator with the 2 bolts.

Torque: 8.5 N·m (87 kgf·cm, 75 in.·lbf)

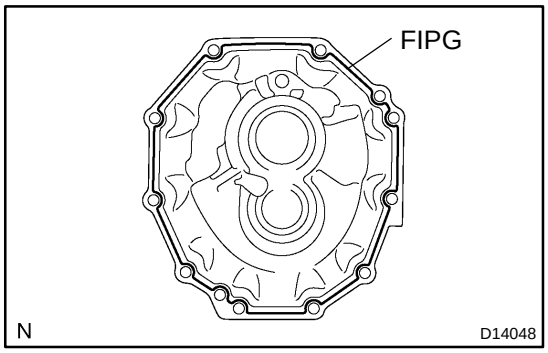

10. INSTALL REAR CASE

(a) Apply FIPG to the rear case as shown in the illustration.

FIPG:

Part No. 08826−00090, THREE BOND 1281 or equivalent

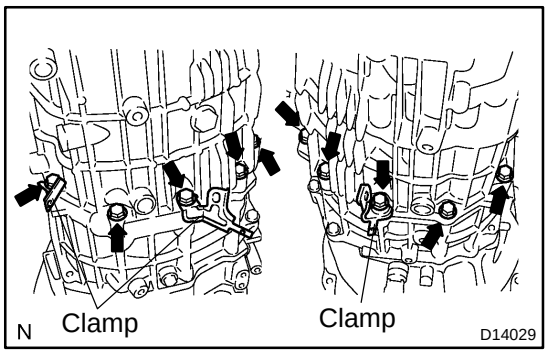

(b) Install the rear case to the middle case with the 10 bolts and 3 clamps.

Torque: 40 N·m (408 kgf·cm, 30 ft·lbf)

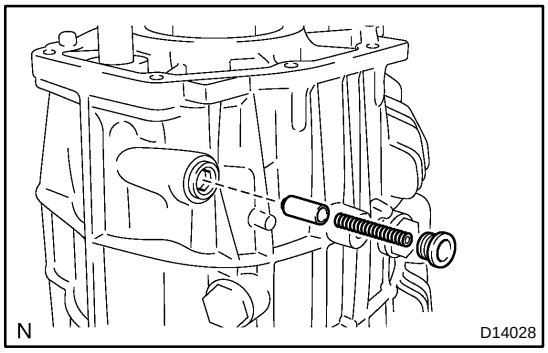

(c) Install the lock ball pin, spring and a new plug.

Torque: 24.5 N·m (250 kgf·cm, 18 ft·lbf)

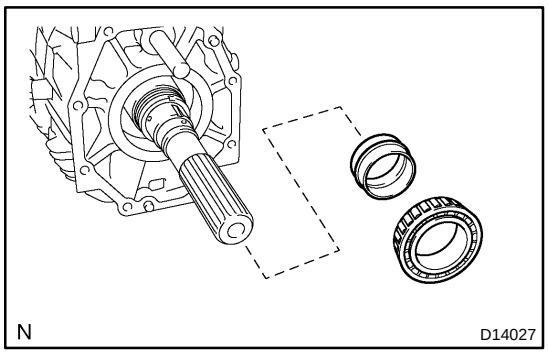

11. INSTALL OUTPUT SHAFT ADJUST NUT

(a) Using a belt and wooden block, fasten the transmission to the work bench.

(b) Install a new spacer and the output shaft taper roller bearing No.2.

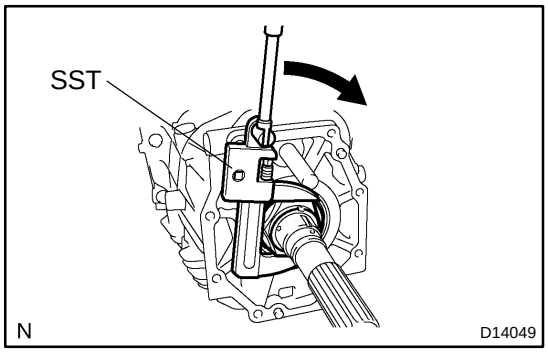

(c) Using SST, temporarily tighten a new nut until the looseness in the output shaft is eliminated.

HINT:

Do not apply preload.

SST 09922−10010

(d) Turn the output shaft 15 times to settle the bearing.

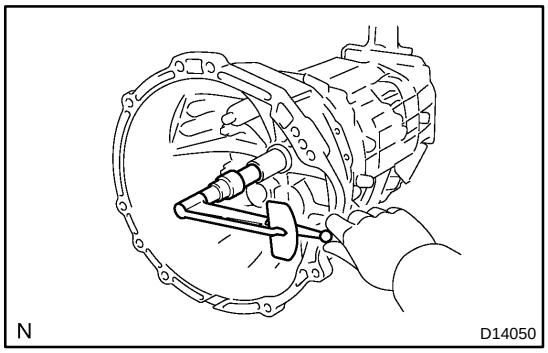

(e) Shift to fifth gear, measure the starting torque and note it down.

(f) Using SST, tighten the nut.

Torque:(Reference)

220 N·m (2,240 kgf·cm, 162 ft·lbf)

SST 09922−10010

(g) Shift to fifth gear, measure the starting torque and note it down.

(h) Make sure that the difference between the values measured at steps (e) and (g) is within the specified range.

Preload (at starting):

0.45 to 1.35 N·m

(4.59 to 13.77 kgf·cm, 3.98 to 11.95 in.·lbf)

If the result is not as specified, tighten and adjust the output shaft adjust nut.

NOTICE:

Do not loosen or remove the output shaft adjust nut to adjust preload.

If the nut is loosened or removed, or if the preload exceeds the specified range, replace the spacer with a new one.

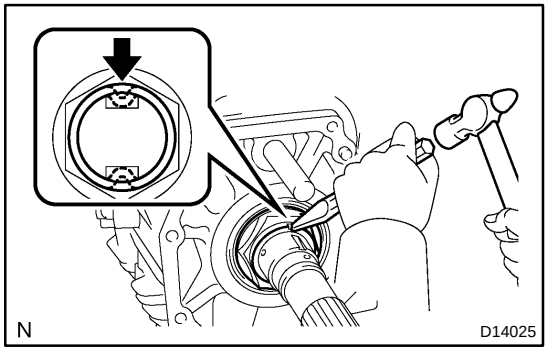

(i) Using a chisel and hammer, stake the output shaft adjust nut.

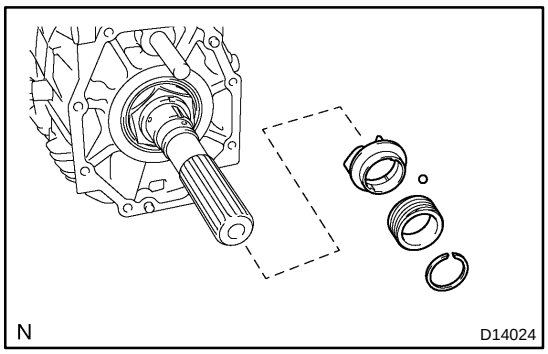

12. INSTALL SPEEDOMETER DRIVE GEAR

(a) Install the oil receiver pipe, ball and speedometer drive gear.

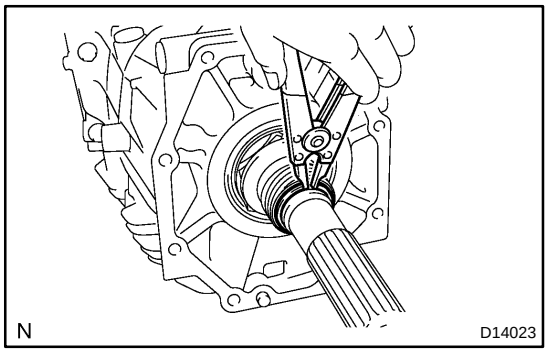

(b) Using a snap ring expander, install the snap ring.

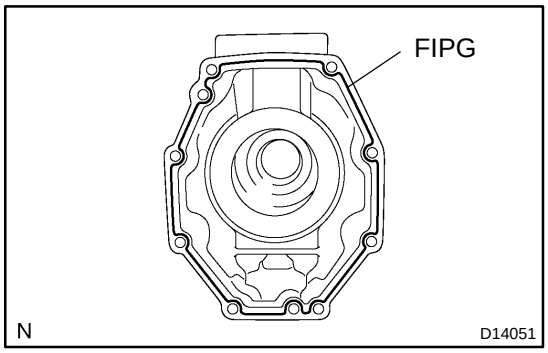

13. INSTALL EXTENSION HOUSING

(a) Apply FIPG to the extension housing as shown in the illustration.
FIPG:
Part No. 08826−00090, THREE BOND 1281 or equivalent

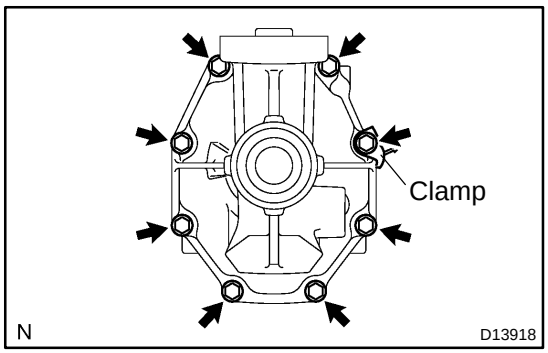

(b) Install the extension housing and shift lever housing to the rear case with the 8 bolts and clamp.
Torque: 29 N·m (296 kgf·cm, 21 ft·lbf)

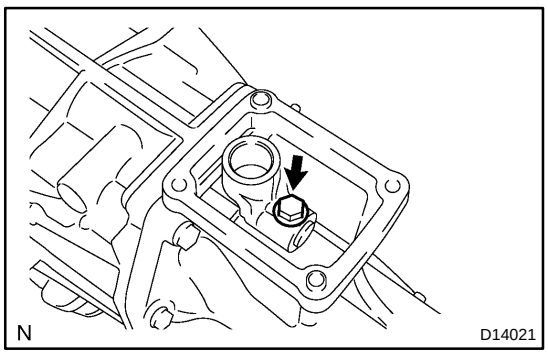

(c) Install the bolt to the shift lever housing.
Torque: 33 N·m (340 kgf·cm, 25 ft·lbf)

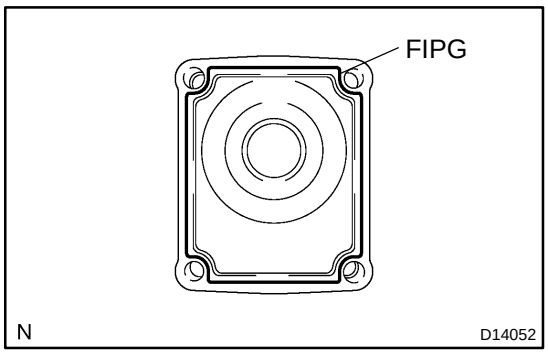

14. INSTALL CONTROL RETAINER

(a) Apply FIPG to the control retainer as shown in the illustration.

FIPG:

Part No. 08826−00090, THREE BOND 1281 or equivalent

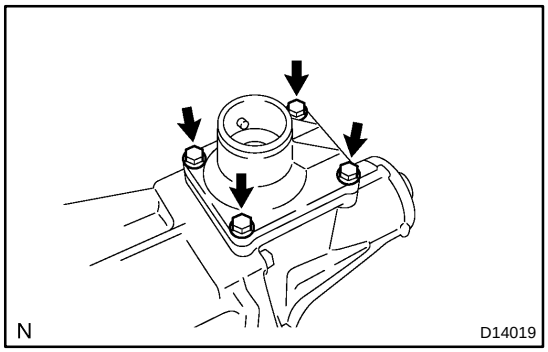

(b) Install the control retainer to the extension housing with the 4 bolts.

Torque: 20 N·m (204 kgf·cm, 15 ft·lbf)

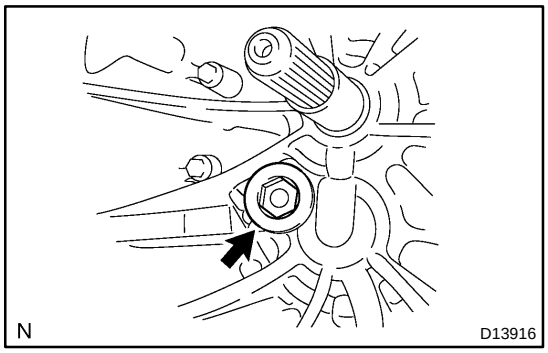

15. INSTALL PLUG

Install the plug to the clutch housing.

Torque: 39 N·m (397 kgf·cm, 29 ft·lbf)

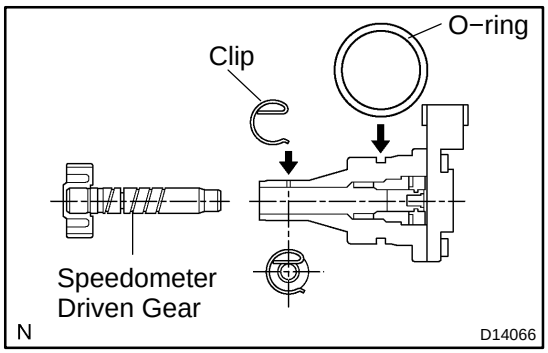

16. INSTALL SPEEDOMETER DRIVEN GEAR

(a) Install a new O−ring to the speedometer shaft sleeve.

(b) Install the speedometer driven gear to the speedometer sensor with the clip.

NOTICE:

Make sure to install the clip in the direction shown in the illustration.

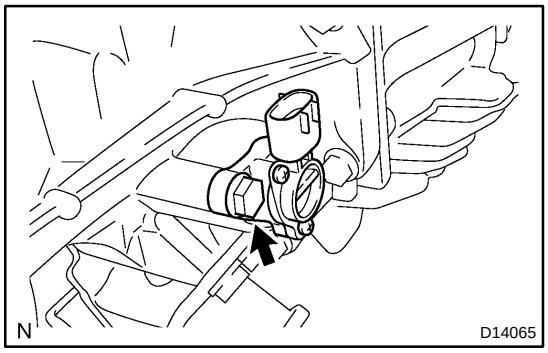

(c) Install the speedometer sensor with the bolt.

Torque: 13 N·m (133 kgf·cm, 10 ft·lbf)

17. INSTALL EXTENSION HOUSING DEFLECTOR

Using a plastic hammer, install the deflector.

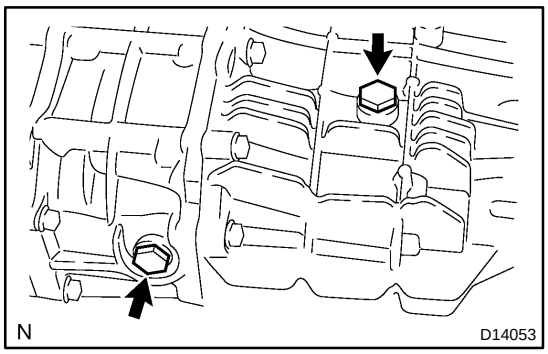

18. INSTALL DRAIN PLUG

Install a new gasket and the drain plug.

Torque: 37 N·m (377 kgf·cm, 27 ft·lbf)

19. INSTALL FILLER PLUG

Install a new gasket and the filler plug.

Torque: 37 N·m (377 kgf·cm, 27 ft·lbf)

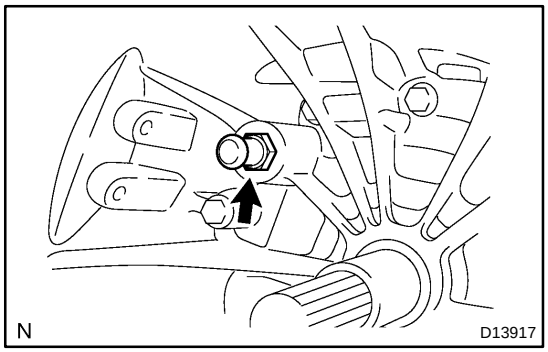

20. INSTALL RELEASE FORK SUPPORT

Install the release fork support to the clutch housing.

Torque: 47 N·m (480 kgf·cm, 35 ft·lbf)

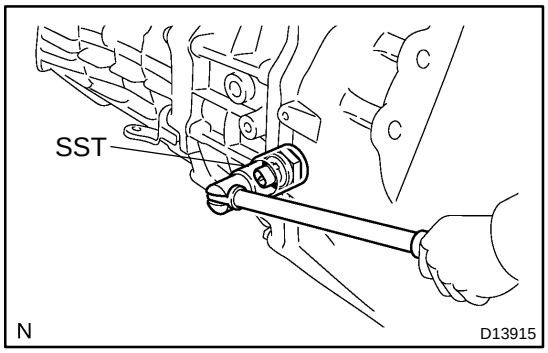

21. INSTALL BACK−UP LAMP SWITCH

Using SST, install the back−up lamp switch.

SST 09817−16011

Torque: 44 N·m (449 kgf·cm, 32 ft·lbf)

MANUAL TRANSMISSION SYSTEM

MT0HM−01

PRECAUTION

NOTICE:

When working with FIPG material, observe the following:

- **Using a razor blade and gasket scraper, remove all the old packing (FIPG) material from the gasket surfaces.**
- **Thoroughly clean all components to remove any loose material.**
- **Clean both sealing surfaces with a non−residue solvent.**
- **Apply FIPG in a continuous line (width approximately 1 mm (0.04 in.)) along the sealing surface.**
- **Parts must be assembled within 10 minutes of FIPG application. Otherwise, the packing material must be removed and reapplied.**

MANUAL TRANSMISSION UNIT

MT0HO−01

COMPONENTS

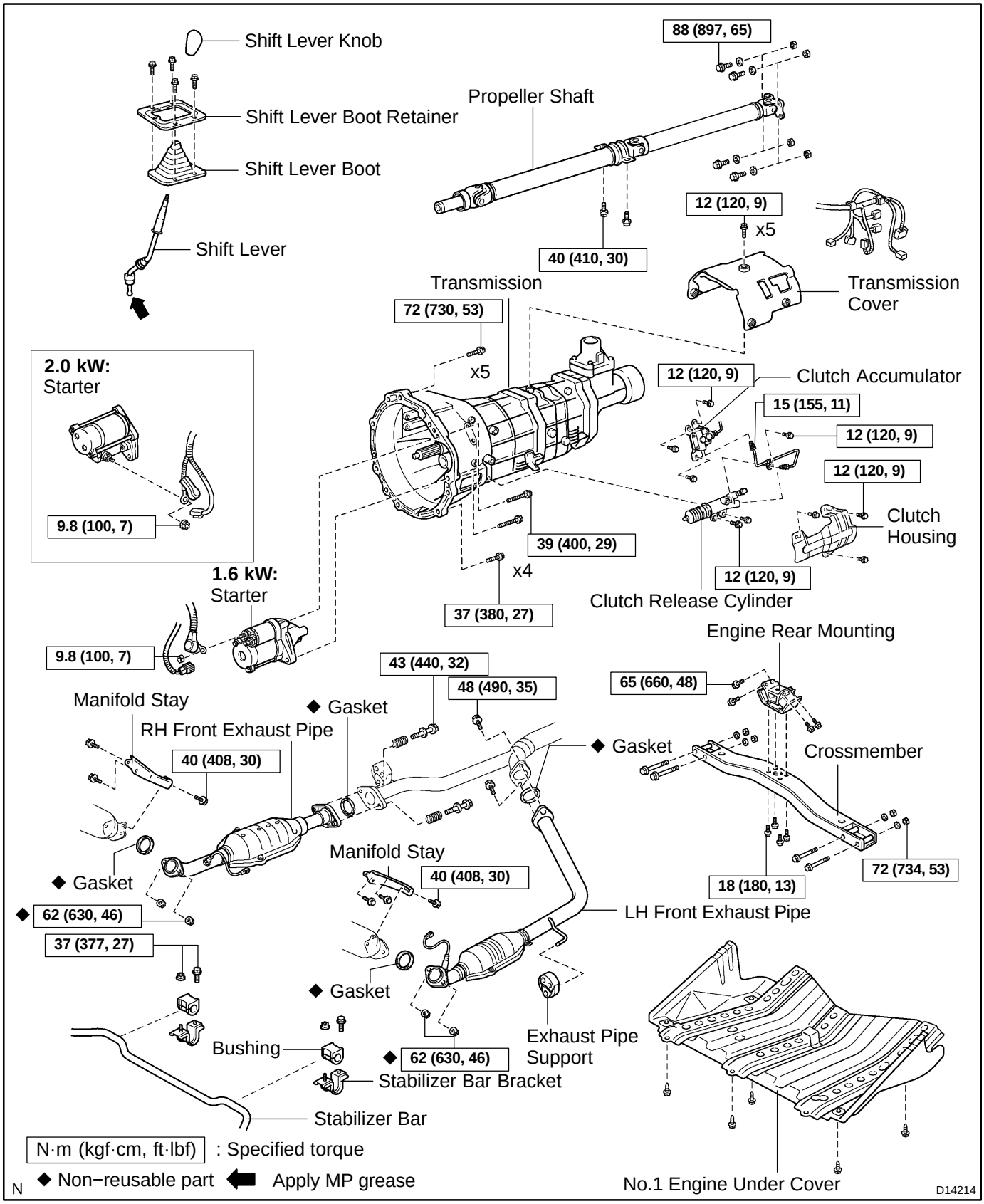

MT0HQ−01

INSTALLATION

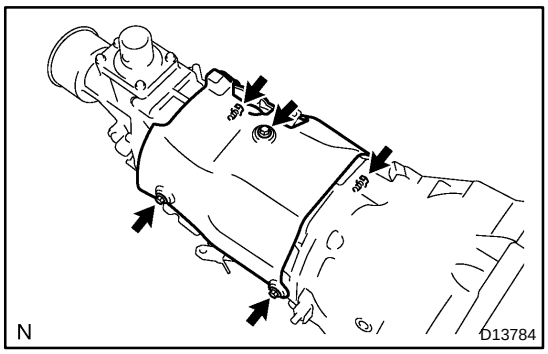

1. INSTALL TRANSMISSION COVER

Install the transmission cover with the 5 bolts.

Torque: 12 N·m (120 kgf·cm, 9 ft·lbf)

2. INSTALL ENGINE REAR MOUNTING

Install the engine rear mounting with the 4 bolts.

Torque: 65 N·m (660 kgf·cm, 48 ft·lbf)

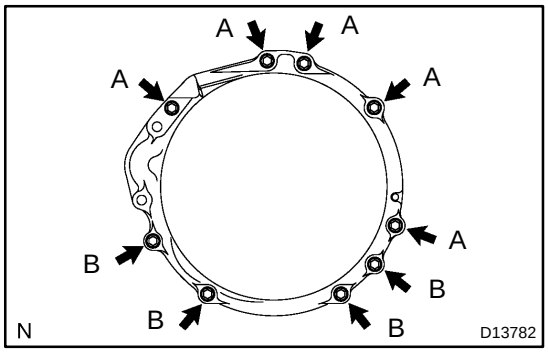

3. INSTALL TRANSMISSION

(a) Install the wire harness to the clamps of the transmission.

(b) Install the transmission to the engine with the 9 bolts.

Torque:

Bolt A: 72 N·m (730 kgf·cm, 53 ft·lbf)

Bolt B: 37 N·m (380 kgf·cm, 27 ft·lbf)

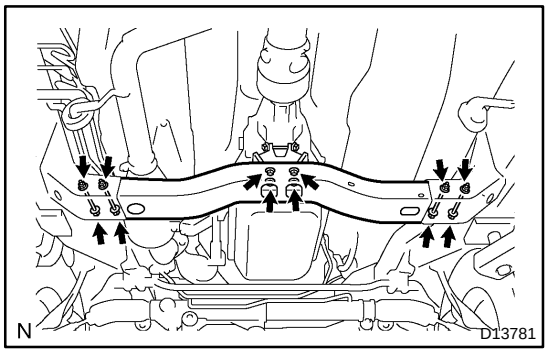

4. INSTALL CROSSMEMBER

(a) Install the crossmember with the 4 bolts, washers and nuts.

Torque: 72 N·m (734 kgf·cm, 53 ft·lbf)

(b) Install the 4 set bolts for the engine rear mounting.

Torque: 18 N·m (180 kgf·cm, 13 ft·lbf)

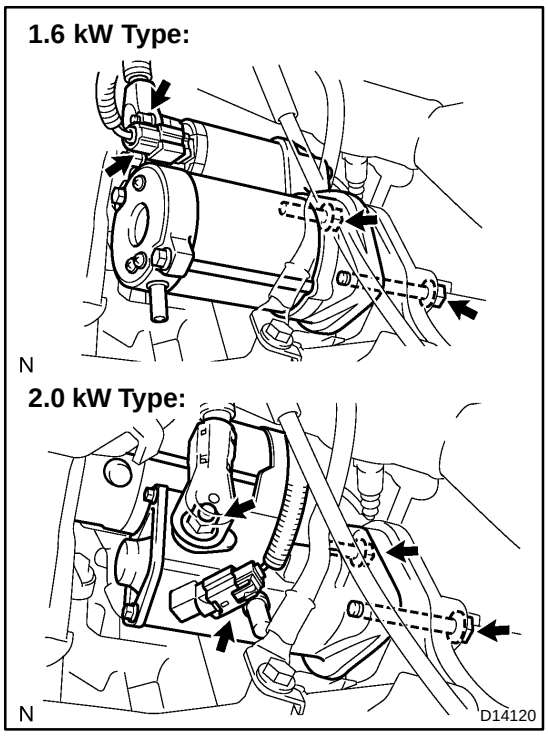

5. INSTALL STARTER

(a) Install the starter with the 2 bolts.

Torque: 39 N·m (400 kgf·cm, 29 ft·lbf)

(b) Connect the terminal and install the nut.

Torque: 9.8 N·m (100 kgf·cm, 7 ft·lbf)

(c) Connect the connector.

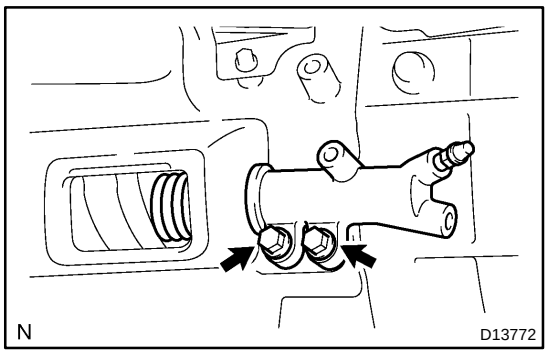

6. INSTALL CLUTCH RELEASE CYLINDER

Install the clutch release cylinder with the 2 bolts.

Torque: 12 N·m (120 kgf·cm, 9 ft·lbf)

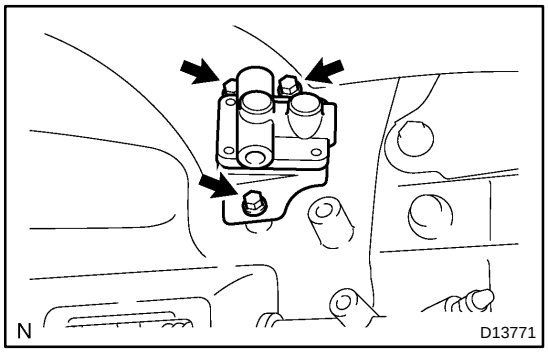

7. INSTALL CLUTCH ACCUMULATOR

(a) Install the clutch accumulator with the 3 bolts.

Torque: 12 N·m (120 kgf·cm, 9 ft·lbf)

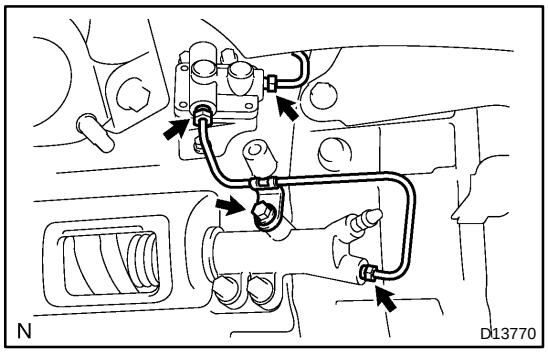

(b) Using SST, connect the clutch lines to the clutch release cylinder and clutch accumulator.

SST 09023−00101

Torque: 15 N·m (155 kgf·cm, 11 ft·lbf)

(c) Install the clamp with the bolt.

Torque: 12 N·m (120 kgf·cm, 9 ft·lbf)

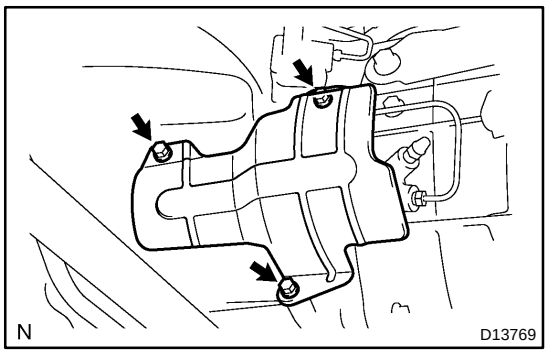

8. INSTALL CLUTCH HOUSING COVER

Install the clutch housing cover with the 3 bolts.

Torque: 12 N·m (120 kgf·cm, 9 ft·lbf)

(a) Install the clutch accumulator with the 3 bolts.

Torque: 12 N·m (120 kgf·cm, 9 ft·lbf)

(b) Install the clutch housing cover with the 3 bolts.

Torque: 12 N·m (120 kgf·cm, 9 ft·lbf)

9. CONNECT VEHICLE SPEED SENSOR, BACK−UP LIGHT SWITCH CONNECTOR

10. INSTALL PROPELLER SHAFT (See page PR−8)

11. INSTALL LH AND RH FRONT EXHAUST PIPE (See page EM−127)

12. INSTALL STABILIZER BAR BRACKET

Install the 2 stabilizer bar brackets with the 2 bolts and nuts.

Torque: 37 N·m (377 kgf·cm, 27 ft·lbf)

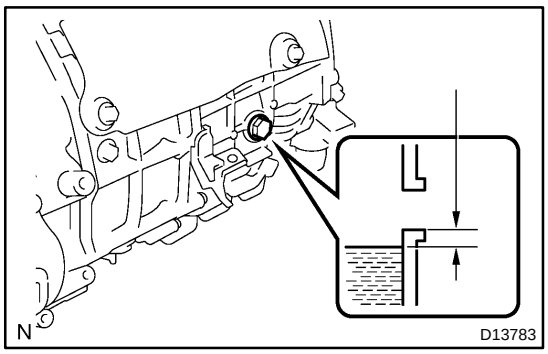

13. FILL WITH TRANSMISSION OIL

(a) Remove the filler plug and gasket and fill with transmission oil.
Oil grade: API GL−4 or GL−5
Viscosity: SAE 75W−90
Capacity: 1.8 liters (1.9 US qts, 1.5 Imp. qts)

(b) Install a new gasket and the filler plug.
Torque: 37 N·m (380 kgf·cm, 27 ft·lbf)

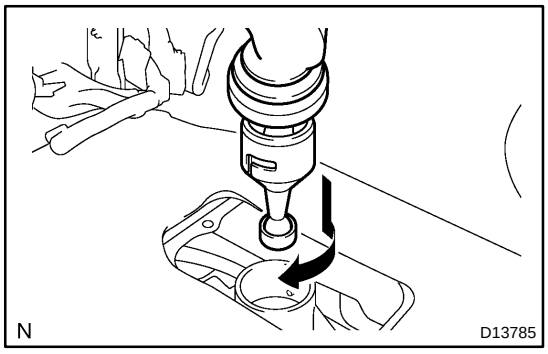

14. INSTALL TRANSMISSION SHIFT LEVER

(a) Apply MP grease to the tip of the shift lever.

(b) While pressing down on the shift lever cap, rotate it clockwise to install.

(c) Install the dust cover.

(d) Install the transmission shift lever boot.

(e) Install the shift lever boot retainer with the 4 bolts.

(f) Install the transmission shift lever knob.

15. CONNECT BATTERY NEGATIVE TERMINAL

16. DO ROAD TEST

MT0HP−01

REMOVAL

1. DISCONNECT BATTERY NEGATIVE TERMINAL

2. REMOVE TRANSMISSION SHIFT LEVER

(a) Remove the transmission shift lever knob.

(b) Remove the 4 bolts and shift lever boot retainer.

(c) Remove the transmission shift lever boot.

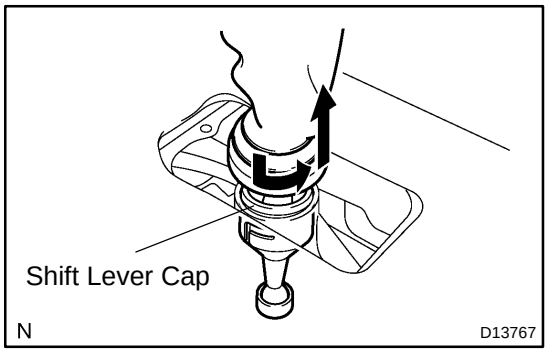

(d) Turn over the dust boot.

(e) While pressing down on the shift lever cap, rotate it counterclockwise to remove.

3. RAISE VEHICLE AND DRAIN TRANSMISSION OIL

(a) Remove the drain plug and gasket and drain the transmission oil.

(b) Install a new gasket and the drain plug.
Torque: 37 N·m (380 kgf·cm, 27 ft·lbf)

4. REMOVE LH AND RH FRONT EXHAUST PIPE (See page EM−126)

5. REMOVE PROPELLER SHAFT (See page PR−3)

HINT:

Cover the transmission extension housing with a cloth to prevent any oil from leaking.

6. DISCONNECT VEHICLE SPEED SENSOR, BACK−UP LIGHT SWITCH CONNECTOR

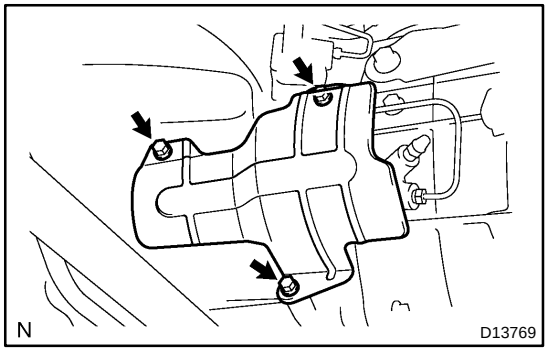

7. REMOVE CLUTCH HOUSING COVER

(a) Remove the 3 bolts and clutch housing cover.

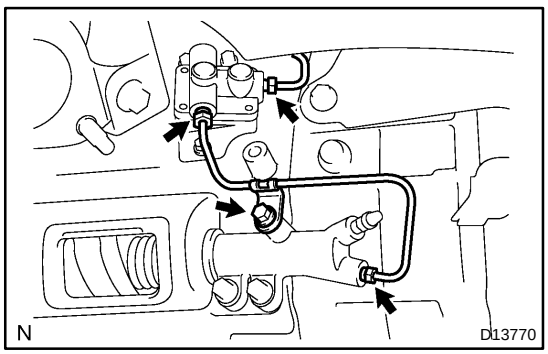

8. REMOVE CLUTCH ACCUMULATOR

(a) Remove the bolt and clamp.

(b) Using SST, disconnect the clutch lines from the clutch accumulator and clutch release cylinder. Use a container to catch the fluid.
SST 09023−00101

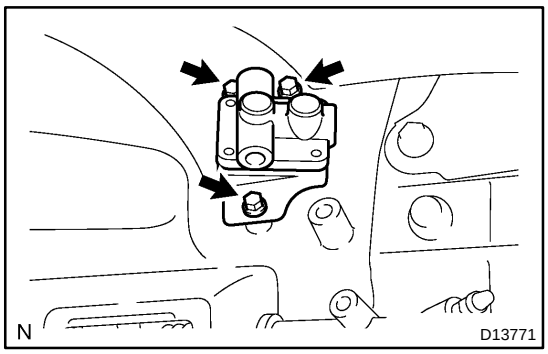

(c) Remove the 3 bolts and clutch accumulator.

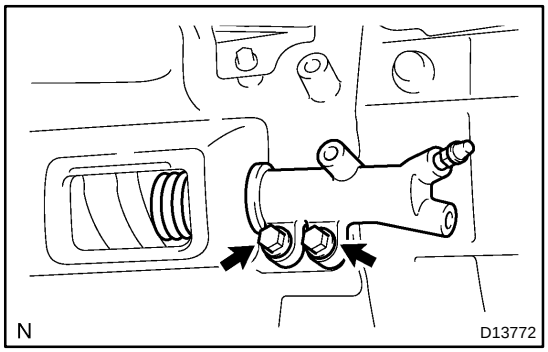

9. REMOVE CLUTCH RELEASE CYLINDER

Remove the 2 bolts and clutch release cylinder.

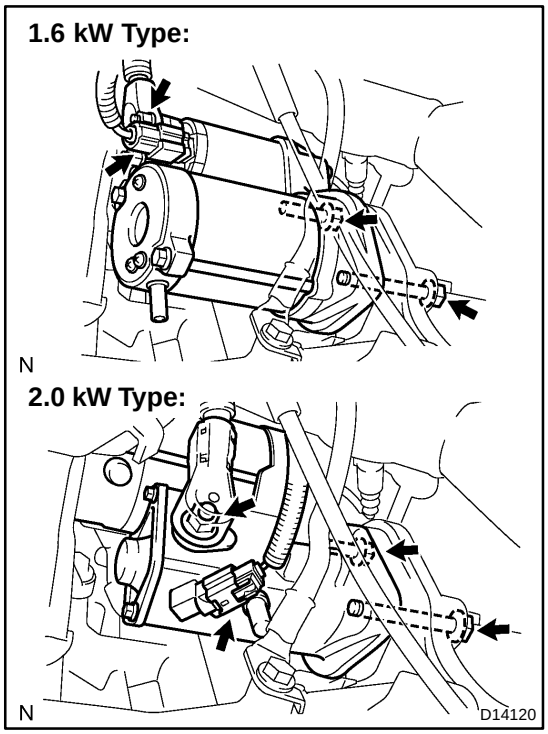

10. REMOVE STARTER

(a) Disconnect the connector.
(b) Remove the nut and disconnect the terminal.
(c) Remove the 2 bolts and starter.

11. JACK UP TRANSMISSION

Using a transmission jack, support the transmission.

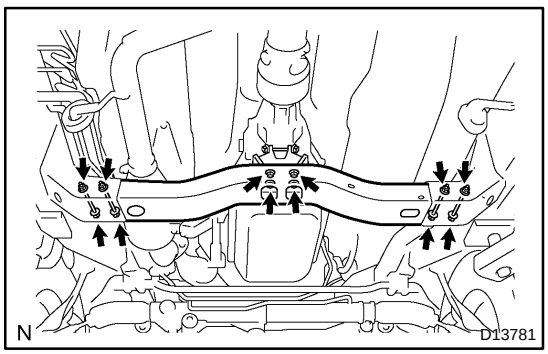

12. REMOVE CROSSMEMBER

(a) Remove the 4 set bolts of the engine rear mounting on the crossmember.
(b) Remove the 4 nuts, washers, bolts and crossmember.

13. REMOVE STABILIZER BAR BRACKET

Remove the 2 bolts, nuts and stabilizer bar brackets.

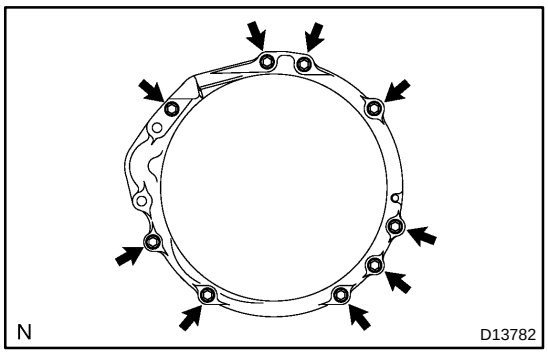

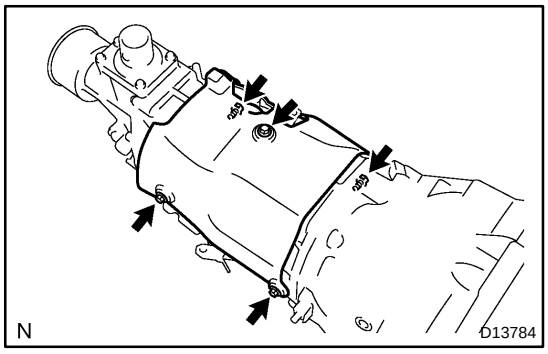

14. REMOVE TRANSMISSION

(a) Remove the 9 transmission mounting bolts from the engine.

(b) Separate the wire harness from the clamps of the transmission.

(c) Pull out the transmission down and toward the rear.

NOTICE:

Be careful not to damage the PS tube.

15. REMOVE ENGINE REAR MOUNTING

Remove the 4 bolts and engine rear mounting.

16. REMOVE TRANSMISSION COVER

Remove the 5 bolts and transmission cover.

OUTPUT SHAFT

COMPONENTS

MT0HY−01

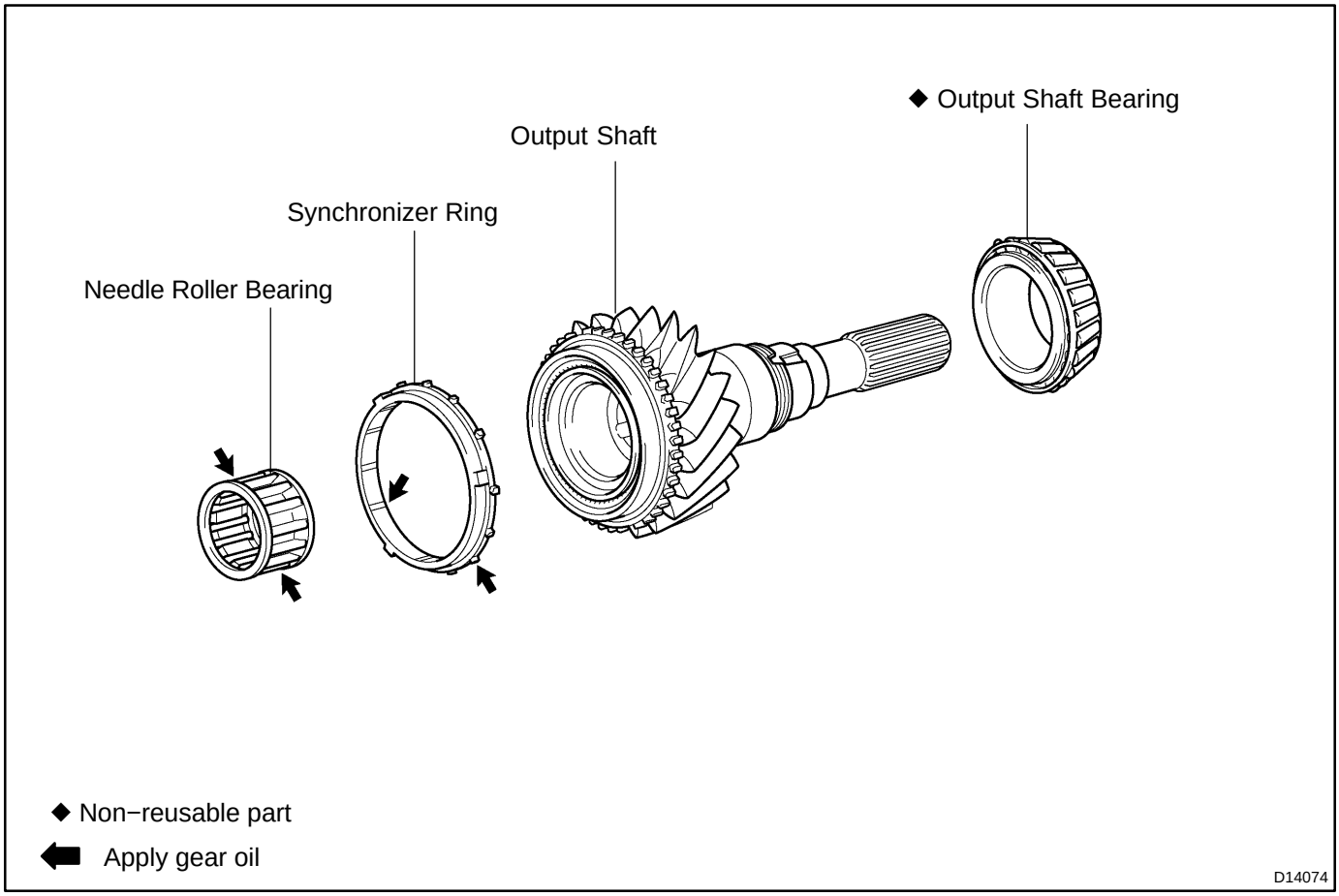

MT0HZ−01

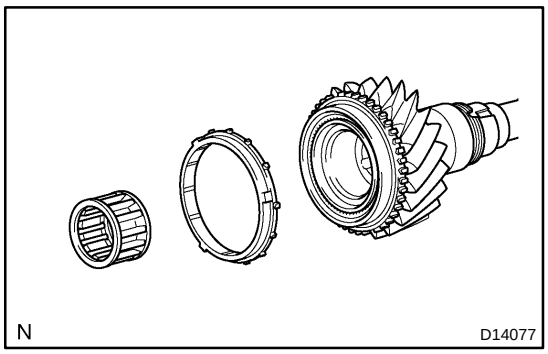

DISASSEMBLY

1. REMOVE SYNCHRONIZER RING

2. REMOVE NEEDLE ROLLER BEARING

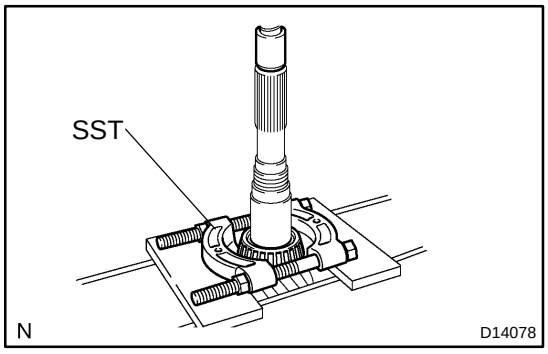

3. REMOVE OUTPUT SHAFT BEARING

Using SST and a press, remove the output shaft bearing.

SST 09950−00020

MT0I0−01

INSPECTION

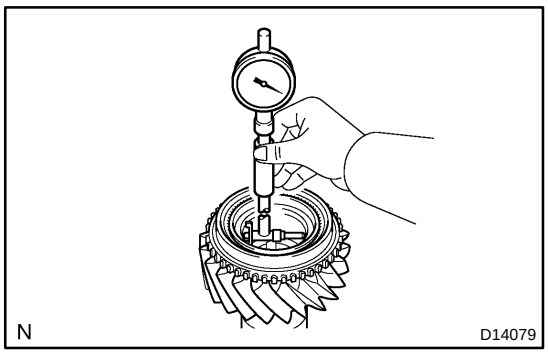

1. INSPECT OUTPUT SHAFT

Using a cylinder gauge, measure the inside diameter of the output shaft.

Standard inside diameter:
45.009 to 45.025 mm (1.7720 to 1.7726 in.)
Maximum inside diameter:
45.025 mm (1.7726 in.)

If the diameter exceeds the maximum, replace the output shaft.

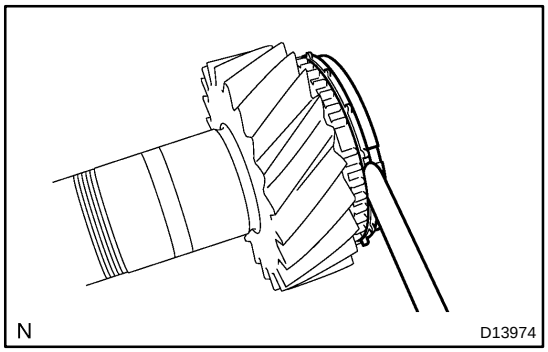

2. INSPECT SYNCHRONIZER RING

(a) Using a feeler gauge, measure the clearance between the synchronizer ring and the gear spline.

Standard clearance:
0.70 to 1.50 mm (0.0276 to 0.0591 in.)
Minimum clearance:
0.70 mm (0.0276 in.)

If the clearance is less than the minimum, replace the synchronizer ring.

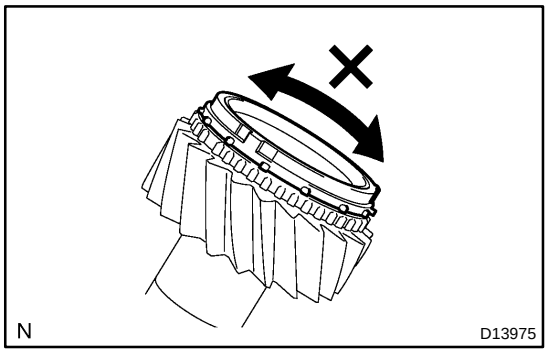

(b) Coat the output shaft and synchronizer ring cone with gear oil. Check the braking effect of the synchronizer ring. Turn the synchronizer ring in one direction while pushing it against the gear cone. Check that the ring locks.

MT0I1−01

REASSEMBLY

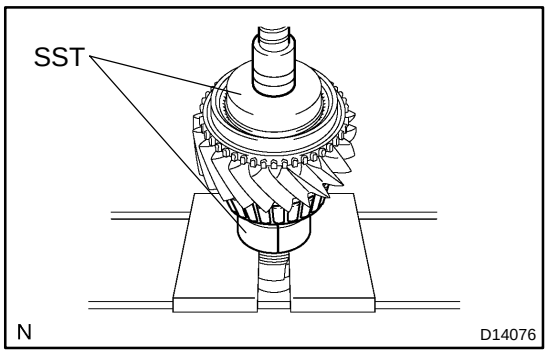

1. INSTALL OUTPUT SHAFT BEARING

(a) Using SST and a press, install a new output shaft bearing to the output shaft.

SST 09710−20010 (09710−06060), 09950−60010 (09951−00650)

(b) Apply grease to the output shaft bearing

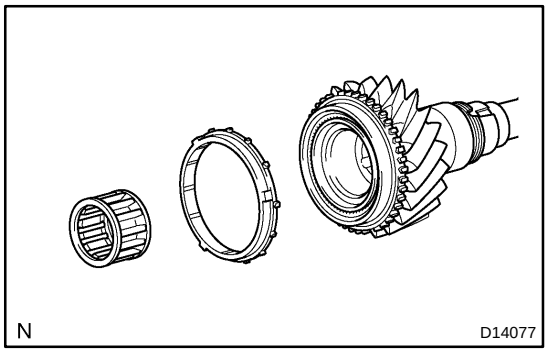

2. INSTALL NEEDLE ROLLER BEARING

3. INSTALL SYNCHRONIZER RING

(a) Apply gear oil to the synchronizer ring.

(b) Install the synchronizer ring to the output shaft.

TROUBLESHOOTING

PROBLEM SYMPTOMS TABLE

MT0HN−01

Use the table below to help find the cause of the problem. The numbers indicate the priority of the likely causes of the problem. Check each part in order. If necessary, replace these parts.

Symptom	Suspected Area	See page
Noise	1. Oil (Level low)	MT−7
	2. Oil (Wrong)	MT−7
	3. Gear (Worn or damaged)	MT−10
	4. Bearing (Worn or damaged)	MT−10
Oil leakage	1. Oil (Level too high)	MT−7
	2. Gasket (Damaged)	MT−10
	3. Oil seal (Worn or damaged)	MT−10
	4. O−ring (Worn or damaged)	MT−10
Hard to shift or will not shift	1. Synchronizer ring (Worn or damaged)	MT−34 MT−52
	2. Shift key spring (Damaged)	MT−34 MT−52
Jumps out of gear	1. Locking ball spring (Damaged)	MT−61
	2. Shift fork (Worn)	MT−34 MT−52
	3. Gear (Worn or damaged)	MT−10
	4. Bearing (Worn or damaged)	MT−10

PP0E4−03

EQUIPMENT

Voltmeter	
Ammeter	
Ohmmeter	
Test lead	
Thermometer	Thermistor
Torque wrench	
Dial indicator	Magnetic clutch
Plastic hammer	Magnetic clutch
Hexagon wrench	Expansion valve

PP0E5−09

LUBRICANT

Item	Capacity	Classification
Compressor oil	−	ND−OIL 8 or equivalent
When replacing receiver	20 cc (0.71 fl.oz.)	
When replacing condenser	40 cc (1.4 fl. oz.)	
When replacing evaporator	40 to 50 cc (1.4 to 1.7 fl. oz.)	

PP0E3−04

RECOMMENDED TOOLS

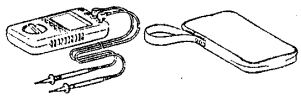	09082−00040	TOYOTA Electrical Tester.	
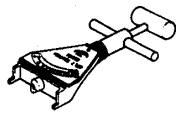	09216−00021	Belt Tension Gauge .	
	09216−00030	Belt Tension Gauge Cable .	

AIR CONDITIONING

PP43F−01

SST (Special Service Tools)

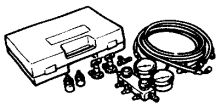	07110−58060	Air Conditioner Service Tool Set	
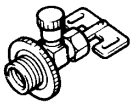	(07117−58060)	Refrigerant Drain Service Valve	
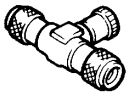	(07117−58070)	T−Joint	
	(07117−58080)	Quick Disconnect Adapter	
	(07117−58090)	Quick Disconnect Adapter	
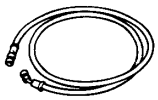	(07117−88060)	Refrigerant Charging Hose	
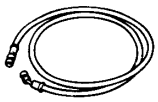	(07117−88070)	Refrigerant Charging Hose	
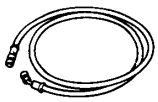	(07117−88080)	Refrigerant Charging Hose	
	07112−66040	Magnetic Clutch Remover	
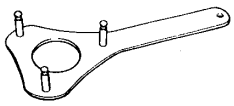	07112−76060	Magnetic Clutch Stopper	
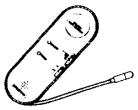	07116−38360	Gas Leak Detector Assembly	
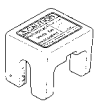	09870−00025	A/C Quick Joint Puller No.2	Liquid tube

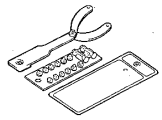	09960−10010	Variable Pin Wrench Set	
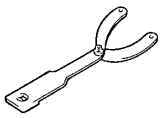	(09962−01000)	Variable Pin Wrench Arm Assy	
	(09963−00500)	Pin 5	
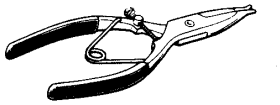	95994−10020	Snap Ring Pliers (DENSO Part No.)	

PP42Q−01

EQUIPMENT

OBD II scan tool	
Torque wrench	
Calipers	Torque converter clutch
Straight edge	Torque converter clutch
Dial indicator	Drive plate runout

PP42R−01

LUBRICANT

Item	Capacity	Classification
Automatic transmission fluid		
Dry fill	10.4 liters (11.0 US qts, 9.2 lmp qts)	Toyota Genuine ATF WS
Drain and refill	3.0 liters (3.2 US qts, 2.6 lmp qts)	

PP42P−01

RECOMMENDED TOOLS

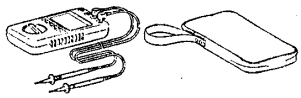	09082−00040 TOYOTA Electrical Tester.	

AUTOMATIC TRANSMISSION (A750E, A750F)

PP42O−01

SST (Special Service Tools)

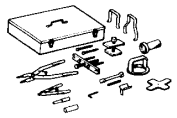	09350−30020	TOYOTA Automatic Transmission Tool Set	
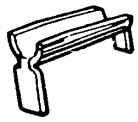	(09351−32020)	Stator Stopper	Torpue converter clutch and drive plate
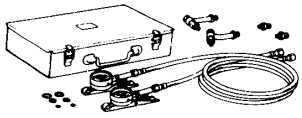	09992−00095	Automatic Transmission Oil Pressure Gauge Set	
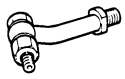	(09992−00231)	Adaptor C	
	(09992−00271)	Gauge Assy	
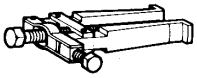	09308−10010	Oil Seal Puller	Extension housing oil seal
	09325−40010	Transmission Oil Plug	Extension housing oil seal
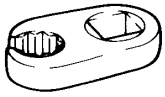	09023−12701	Union Nut Wrench 17mm	Oil cooler pipe

PP06H−05

EQUIPMENT

Voltmeter	
Ammeter	
Ohmmeter	
Test lead	
Syphon	Brake fluid level warning switch
Bulb (3.4 W)	
Torque wrench	

PP06G−10

RECOMMENDED TOOLS

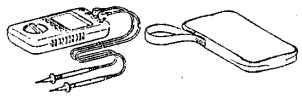	09082−00040	TOYOTA Electrical Tester.	
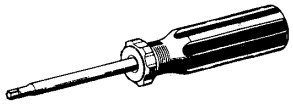	09041−00030	Torx Driver T30 .	For removing and installing steering wheel pad
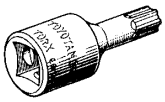	09042−00010	Torx Socket T30 .	For removing and installing steering wheel pad

BODY ELECTRICAL

PP06F−12

SST (Special Service Tools)

 09843−18020 Diagnosis Check Wire	

PP0MV−22

EQUIPMENT

Clip remover	
Torque wrench	
Torx® driver	
Hog ring pliers	
Tape	To avoid surface damage
Adhesive tape	To avoid surface damage
Double − stick tape	
Adhesive	
Cleaner	
Shop rag	Regulator handle
Knife	Moulding
Heat light	Moulding
Piano wire	Windshield
Sealer gun	
Brush	
Putty spatula	
Wooden block or similar object	For tying both piano wire ends
Plastic sheet	To avoid surface damage
Rope (no projections, difficult to break)	Seat belt pretensioner disposal
Tire Width: 185 mm (7.28 in.) Inner diam.: 360 mm (14.17 in.)	Seat belt pretensioner disposal
Tire with disc wheel Width: 185 mm (7.28 in.) Inner diam.: 360 mm (14.17 in.)	Seat belt pretinsioner disposal
Vinyl bag	Seat belt pretensioner disposal

PP0MW−03

LUBRICANT

Item	Capacity	Classification
MP grease	−	−

PP25M−03

RECOMMENDED TOOLS

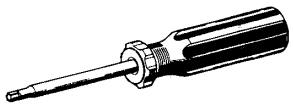	09041−00030	Torx Driver T30 .	
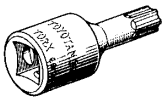	09042−00010	Torx Socket T30 .	
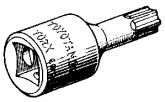	09042−00020	Torx Socket T40 .	

Torx is a registered trademark of Textron Inc.

PP0TC−11

SSM (Special Service Materials)

08833−00070	Adhesive 1324, THREE BOND 1324 or equivalent	
08833−00030	Three cement black or equivalent	
08850−00801	Windshield Glass Adhesive Set or equivalent	

BODY

SST (Special Service Tools)

PP25L−02

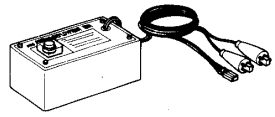	09082−00700	SRS Airbag Deployment Tool	
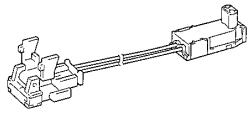	09082−00740	Airbag Deployment Wire Sub−harness No.2	
	09812−00020	Door Hinge Set Bolt Wrench	

PP0FC−02

EQUIPMENT

Torque wrench	
Micrometor	Brake disc
Dial indicator	Brake disc
Vernier calipers	Brake drum

PP0FD−02

LUBRICANT

Item	Capacity	Classification
Brake fluid	−	SAE J1703 or FMVSS No.116 DOT 3

PP0FB−04

RECOMMENDED TOOLS

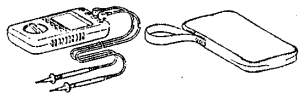	09082−00040 TOYOTA Electrical Tester.	
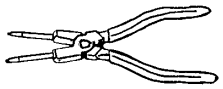	09905−00013 Snap Ring Pliers .	

BRAKE

SST (Special Service Tools)

PP446−01

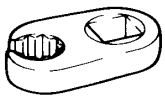	09023−00101	Union Nut Wrench 10mm	
	09703−30010	Brake Shoe Return Spring Tool	
	09709−29018	LSPV Gauge Set	
	09718−00010	Shoe Hold Down Spring Driver	
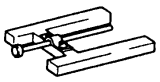	09737−00011	Brake Booster Push Rod Gauge	
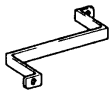	09737−00020	Brake Booster Push Rod Wrench	
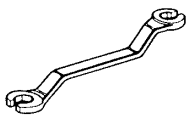	09751−36011	Brake Line Union Nut 10 x 12 mm Wrench	
	09843−18020	Diagnosis Check Wire	
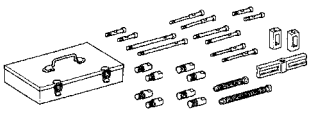	09950−50013	Puller C Set	

PP43E−01

EQUIPMENT

Ammeter (A)	
Dial indicator with magnetic base	
Ohmmeter	

PP43D−01

RECOMMENDED TOOLS

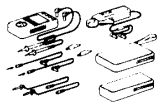	09082−00050	TOYOTA Electrical Tester Set.	
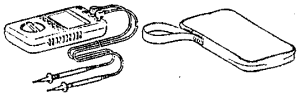	(09082−00040)	TOYOTA Electrical Tester.	
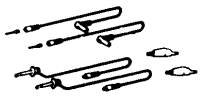	(09083−00150)	Test Lead Set	

CHARGING (1GR–FE)

SST (Special Service Tools)

PP43C–01

	09285–76010	Injection Pump Camshaft Bearing Cone Replacer	
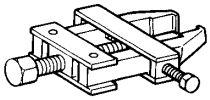	09820–00021	Alternator Rear Bearing Puller	
	09820–00031	Alternator Rear Bearing Replacer	
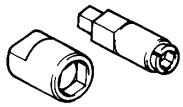	09820–63011	Alternator Pulley Set Nut Wrench Set	
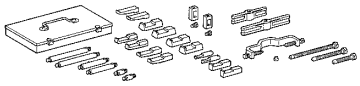	09950–40011	Puller B Set	
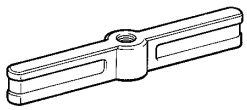	(09951–04020)	Hanger 200	
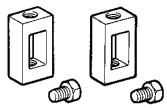	(09952–04010)	Slide Arm	
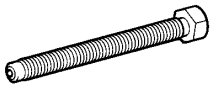	(09953–04020)	Center Bolt 150	
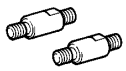	(09954–04010)	Arm 25	
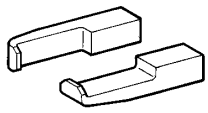	(09955–04071)	Claw No.7	
	(09957–04010)	Attachment	
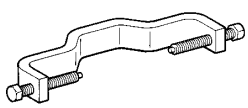	(09958–04011)	Holder	

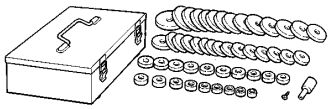	09950−60010 Replacer Set	
	(09951−00250) Replacer 25	
	(09951−00470) Replacer 47	
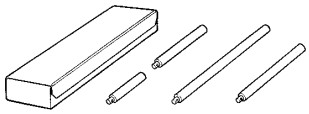	09950−70010 Handle Set	
	(09951−07100) Handle 100	

PP1B4−05

EQUIPMENT

Battery specific gravity gauge+	Battery
Torque wrench	
Vernier calipers	Rotor (Slip ring)

PP3WU−01

RECOMMENDED TOOLS

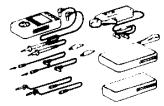	09082−00050 TOYOTA Electrical Tester Set.	
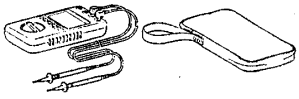	(09082−00040) TOYOTA Electrical Tester.	

CHARGING (2UZ−FE)

PP249−03

SST (Special Service Tools)

	09285−76010	Injection Pump Camshaft Bearing Cone Replacer	Rotor rear bearing cover
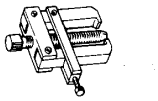	09286−46011	Injection Pump Spline Shaft Puller	Rectifier end frame
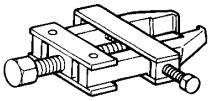	09820−00021	Alternator Rear Bearing Puller	
	09820−00031	Alternator Rear Bearing Replacer	
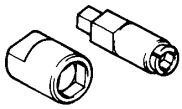	09820−63011	Alternator Pulley Set Nut Wrench Set	
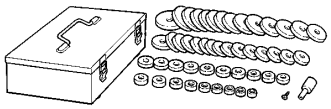	09950−60010	Replacer Set	Rotor front bearing
	(09951−00260)	Replacer 26	
	(09951−00460)	Replacer 46	70 A type
	(09951−00520)	Replacer 52	80 A type
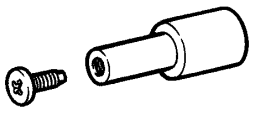	(09952−06010)	Adapter	

PP0EP−02

EQUIPMENT

Vernier calipers	
Dial indicator	

PP0EO−04

RECOMMENDED TOOLS

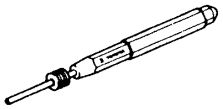	09031−00030 Pin Punch .	
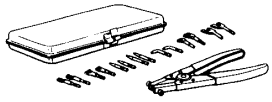	09904−00010 Expander Set .	

CLUTCH

PP43G−01

SST (Special Service Tools)

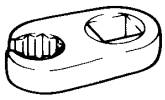	09023−00101	Union Nut Wrench 10mm	CLUTCH RELEASE CYLINDER CLUTCH MASTER CYLINDER
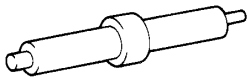	09301−00110	Clutch Guide Tool	CLUTCH UNIT
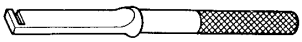	09333−00013	Clutch Diaphragm Spring Aligner	CLUTCH UNIT

PP436−01

COOLANT

Item	Capacity	Classification
Engine coolant	11.6 liters (12.3 US qts, 10.2 lmp. qts)	”Toyota Super Long Life Coolant” or similar high quality ethylene glycol based non−silicate, non−amine, non−nitrite, and non−borate coolant with long−life hybrid organic acid technology

COOLING (1GR−FE)

PP435−01

EQUIPMENT

Heater	
Radiator cap tester	
Slide calipers	
Thermometer	
Torque wrench	

PP1AR−05

COOLANT

Item	Capacity	Classification
Engine coolant	11.6 liters (12.3 US qts, 10.2 lmp. qts)	”TOYOTA Super Long Life Coolant” or similar high quality ethylene glycol based non−silicate, non−amine, non−nitrite, and non−borate coolant with long−life hybrid organic acid technology

COOLING (2UZ−FE)

EQUIPMENT

PP1AQ−05

Heater	Thermostat
Radiator cap tester	
Thermometer	Thermostat
Torque wrench	

PP1AS–04

SSM (Special Service Materials)

08826–00100	Seal Packing 1282B, THREE BOND 1282B or equivalent (FIPG)	Water inlet housing

EMISSION CONTROL (1GR−FE)

PP43H−01

EQUIPMENT

Vacuum gauge	
Pressure gauge	

PP1AK−06

EQUIPMENT

MITYVAC (Hand−held vacuum pump)	
Pressure gauge	
Torque wrench	
Vacuum gauge	
Hose Clipper	

EMISSION CONTROL (2UZ−FE)

PP42V−02

RECOMMENDED TOOLS

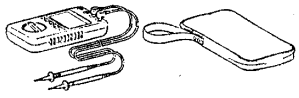	09082−00040 TOYOTA Electrical Tester.	

PP43T−01

EQUIPMENT

CO/HC meter	
Compression gauge	
Connecting rod aligner	
Cylinder gauge	
Dial indicator with magnetic base	
Engine sling device	
Feeler gauge	
Heater	
Micrometer	
Piston ring compressor	
Piston ring expander	
Plastigage	
Precision straight edge	
Reamer	
Spring tester	
Steel square	
Tachometer	
Timing light	
Torque wrench	
Valve seat cutter	
V−block	
Vernier calipers	
Wooden block	
Press	

PP43S–01

RECOMMENDED TOOLS

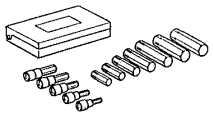	09040–00011	Hexagon Wrench Set .	
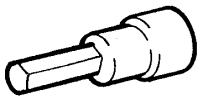	(09043–20080)	Socket Hexagon Wrench 8.	
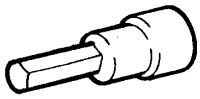	(09043–20100)	Socket Hexagon Wrench 10.	
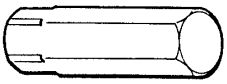	(09043–30140)	Straight Hexagon Wrench 14.	
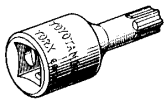	09042–00010	Torx Socket T30 .	
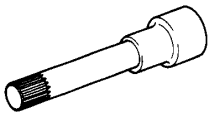	09043–50100	Bi–hexagon Wrench 10 mm .	

PP43U−01

SSM (Special Service Materials)

08826−00080	Seal Packing Black or equivalent (FIPG)	
08826−00100	Seal Packing 1282B, THREE BOND 1282B or equivalent (FIPG)	
08833−00070	Adhesive 1324, THREE BOND 1324 or equivalent	

ENGINE MECHANICAL (1GR−FE)

SST (Special Service Tools)

PP445−01

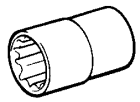	09011−38121	12 mm Socket Wrench for 12 Pointed Head	CYLINDER BLOCK
	09032−00100	Oil Pan Seal Cutter	TIMING CHAIN
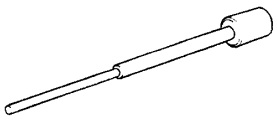	09201−01055	Valve Guide Bushing Remover & Replacer 5.5	CYLINDER HEAD
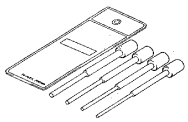	09201−10000	Valve Guide Bushing Remover & Replacer Set	CYLINDER HEAD
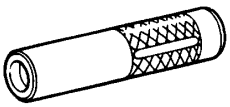	09201−41020	Valve Stem Oil Seal Replacer	CYLINDER HEAD
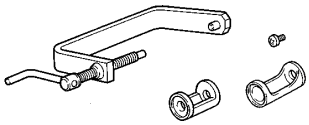	09202−70020	Valve Spring Compressor	CYLINDER HEAD
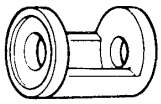	(09202−00010)	Attachment	CYLINDER HEAD
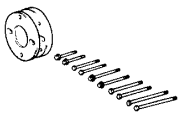	09213−54015	Crankshaft Pulley Holding Tool	TIMING CHAIN
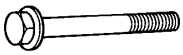	(91651−60855)	Bolt	TIMING CHAIN
	09222−30010	Connecting Rod Bushing Remover & Replacer	CYLINDER BLOCK
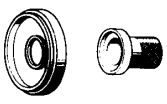	09223−78010	Crankshaft Oil Seal Replacer	CYLINDER BLOCK
	09226−10010	Crankshaft Front & Rear Bearing Replacer	TIMING CHAIN

	09330–00021	Companion Flange Holding Tool	TIMING CHAIN
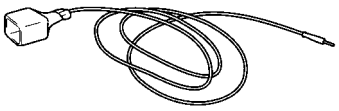	09843–18030	Tacho–pulse Pickup Wire No.2	IDLE SPEED
	09843–18040	Diagnosis Check Wire No.2	IGNITION TIMING
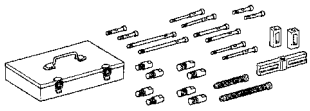	09950–50013	Puller C Set	TIMING CHAIN
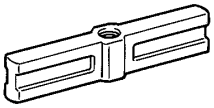	(09951–05010)	Hanger 150	TIMING CHAIN
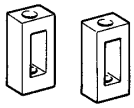	(09952–05010)	Slide Arm	TIMING CHAIN
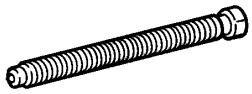	(09953–05020)	Center Bolt 150	TIMING CHAIN
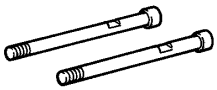	(09954–05031)	Claw No.3	TIMING CHAIN
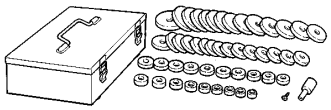	09950–60010	Replacer Set	CYLINDER BLOCK CYLINDER HEAD
	(09951–00250)	Replacer 25	CYLINDER HEAD
	(09951–00350)	Replacer 35	CYLINDER BLOCK
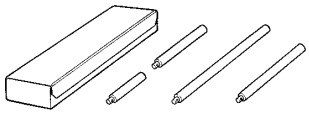	09950–70010	Handle Set	CYLINDER BLOCK CYLINDER HEAD
	(09951–07100)	Handle 100	CYLINDER HEAD

	(09951−07150) Handle 150	CYLINDER BLOCK CYLINDER HEAD

PP1BM−01

EQUIPMENT

Caliper gauge	
CO/HC meter	
Compression gauge	
Connecting rod aligner	
Cylinder gauge	
Dial indicator	
Dye penetrant	
Engine tune−up tester	
Groove cleaning tool	
Heater	
Magnetic finger	
Micrometer	
Pin hole grinder	
OBD II scan tool	
Piston ring compressor	
Piston ring expander	
Plastigage	
Precision straight edge	
Press	
Soft brush	
Ridge reamer	
Solvent	
Spring tester	Valve spring
Steel square	Valve spring
Thermometer	
Torque wrench	
Valve seat cutter	
V−block	
Vernier calipers	
Wire brush	Valve

PP1BL−08

RECOMMENDED TOOLS

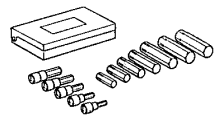	09040−00011	Hexagon Wrench Set .	
	09090−04020	Engine Sling Device	For suspension engine
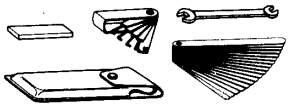	09200−00010	Engine Adjust Kit .	
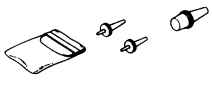	09258−00030	Hose Plug Set .	Plug for vacuum hose, fuel hose etc.
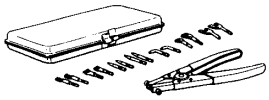	09904−00010	Expander Set .	

PP432−01

SSM (Special Service Materials)

08826−00080	Seal Packing Black or equivalent (FIPG)	Camshaft bearing cap Cylinder head semi−circular plug Cylinder head cover Rear oil sear retainer
08826−00080	Seal Packing Black or equivalent (FIPG)	Camshaft housing plug
08826−00100	Seal Packing 1282B, THREE BOND 1282B or equivalent (FIPG)	Coolant drain union
08833−00070	Adhesive 1324, THREE BOND 1324 or equivalent	Drive plate bolt Torque converter clutch bolt
08833−00080	Adhesive 1344 THREE BOND 1344 LOCTITE 242 or equivalent	No.1 idler pulley bolt

ENGINE MECHANICAL (2UZ−FE)

PP431−01

SST (Special Service Tools)

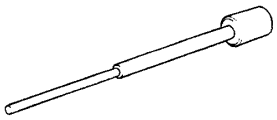	09201−01055	Valve Guide Bushing Remover & Replacer 5.5	
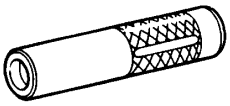	09201−41020	Valve Stem Oil Seal Replacer	
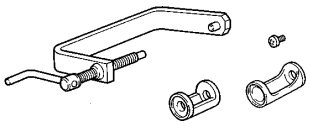	09202−70020	Valve Spring Compressor	
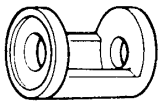	(09202−00010)	Attachment	
	09213−70011	Crankshaft Pully Holding Tool	
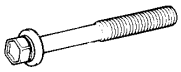	(90105−08076)	Bolt	
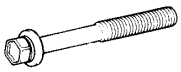	(90119−08216)	Bolt	
	09222−30010	Connecting Rod Bushing Remover & Replacer	
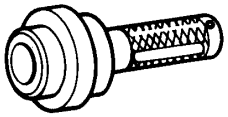	09223−46011	Crankshaft Front Oil Seal Replacer	Crankshaft pulley Crankshaft timing pulley
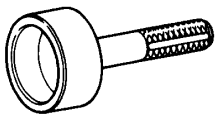	09223−56010	Crankshaft Rear Oil Seal Replacer	
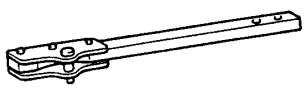	09330−00021	Companion Flange Holding Tool	Crankshaft pulley
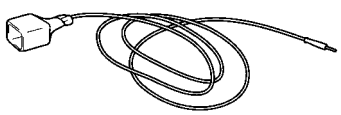	09843−18030	Tacho−pulse Pickup Wire No.2	

	09843–18040 Diagnosis Check Wire No.2	
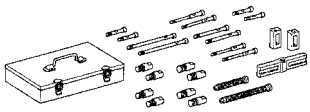	09950–50013 Puller C Set	
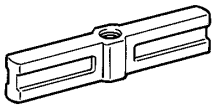	(09951–05010) Hanger 150	Crankshaft pulley Crankshaft timing pulley
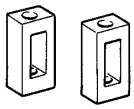	(09952–05010) Slide Arm	Crankshaft pulley Crankshaft timing pulley
	(09953–05010) Center Bolt 100	Crankshaft pulley Crankshaft timing pulley
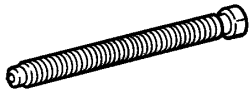	(09953–05020) Center Bolt 150	Crankshaft pulley Crankshaft timing pulley
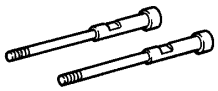	(09954–05011) Claw No.1	Crankshaft timing pulley
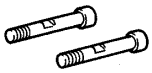	(09954–05021) Claw No.2	Crankshaft pulley
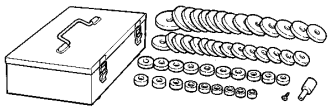	09950–60010 Replacer Set	
	(09951–00240) Replacer 24	
	(09951–00440) Replacer 44	
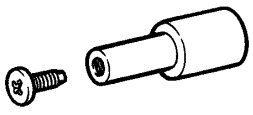	(09952–06010) Adapter	
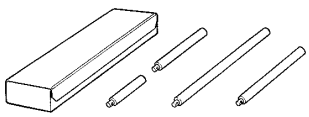	09950–70010 Handle Set	

	(09951−07100) Handle 100	Spark plug tube Valve guide bushing
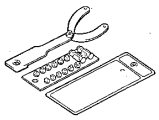	09960−10010 Variable Pin Wrench Set	
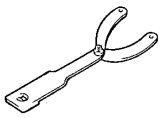	(09962−01000) Variable Pin Wrench Arm Assy	Camshaft sub−gear
	(09963−00400) Pin 4	Camshaft sub−gear
	(09963−00500) Pin 5	Camshaft sub−gear
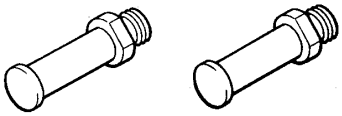	(09963−01000) Pin 10	Camshaft sub−gear

PP43R−01

EQUIPMENT

Spark plug cleaner	
Torque wrench	

IGNITION (1GR−FE)

RECOMMENDED TOOLS

PP43Q−01

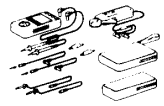	09082−00050 TOYOTA Electrical Tester Set.	
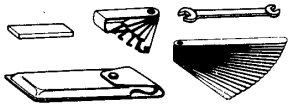	09200−00010 Engine Adjust Kit .	

PP1AM−01

EQUIPMENT

Megger (Insulation resistance meter)	Spark plug
Spark plug cleaner	
Torque wrench	

IGNITION (2UZ−FE)

RECOMMENDED TOOLS

PP3WQ−01

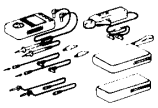	09082−00050	TOYOTA Electrical Tester Set.	
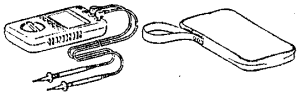	(09082−00040)	TOYOTA Electrical Tester.	
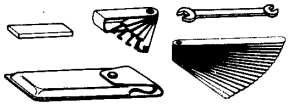	09200−00010	Engine Adjust Kit .	

PP43N−01

EQUIPMENT

Oil pressure gauge	
Drain hose	

PP43O−01

LUBRICANT

Engine oil			API grade SL, Energy−Conserving or ILSAC multigrade engine oil. SAE 5W−30 is the best choise for good fuel economy, and good starting in cold weather.
Drain and refill	w/ Oil filter change	4.5 liters (4.8 US qts, 4.0 Imp. Qts)	
	w/o Oil filter change	4.2 liters (4.4 US qts, 3.7 Imp. Qts)	
Dry fill		5.6 liters (5.9 US qts, 4.9 Imp. Qts)	

PP43M−01

RECOMMENDED TOOLS

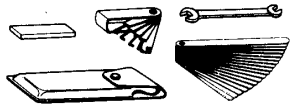	09200−00010 Engine Adjust Kit .	

PP43P–01

SSM (Special Service Materials)

08833–00080	Adhesive 1344 THREE BOND 1344 LOCTITE 242 or equivalent	

LUBRICATION (1GR−FE)

PP43L−01

SST (Special Service Tools)

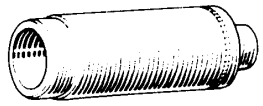	09226−10010	Crankshaft Front & Rear Bearing Replacer	OIL PUMP
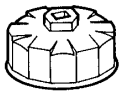	09228−07501	Oil Filter Wrench	OIL AND FILTER

PP1AV−02

EQUIPMENT

Oil pressure gauge	
Precision straight edge	
Torque wrench	

PP1AW−09

LUBRICANT

Item	Capacity	Classification
Engine oil		API grade SL Energy−Conserving or ILSAC multigrade engine oil.
Dry fill	7.1 liters (7.5 US qts, 6.2 Imp. qts)	
Drain and refill		
w/ Oil filter change	6.2 liters (6.6 US qts, 5.5 Imp. qts)	
w/o Oil filter change	5.7 liters (6.0 US qts, 5.0 Imp qts)	

PP1AU−04

RECOMMENDED TOOLS

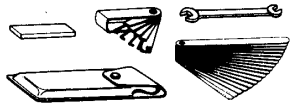	09200−00010 Engine Adjust Kit .	
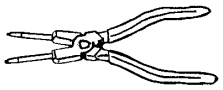	09905−00013 Snap Ring Pliers .	

PP1AX–04

SSM (Special Service Materials)

08826–00080	Seal Packing Black or equivalent (FIPG)	Oil pump No.1 oil pan No.2 oil pan
08833–00080	Adhesive 1344 THREE BOND 1344 LOCTITE 242 or equivalent	Oil pressure switch

LUBRICATION (2UZ–FE)

PP24A–04

SST (Special Service Tools)

	09032–00100	Oil Pan Seal Cutter	
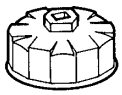	09228–07501	Oil Filter Wrench	
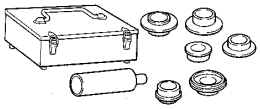	09316–60011	Transmission & Transfer Bearing Replacer	
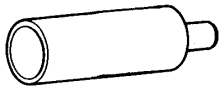	(09316–00011)	Replacer Pipe	Crankshaft front oil seal

MAINTENANCE

EQUIPMENT

PP0G5−02

Mirror	Brake hose
Torque wrench	

PP43V−01

EQUIPMENT

Plastic hammer	
Chisel	
Feeler gauge	
Dial indicator with magnetic base	
Belt	
Wooden block	
Hexagon wrench	
Vernier caliper	
Micrometer	
Cylinder gauge	

PP43W−01

LUBRICANT

Transmission oil	1.8 liters (1.9 US qts, 1.5 Imp. qts)	API GL−4 or GL−5 SAE 75W−90

PP43Z−01

RECOMMENDED TOOLS

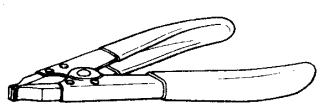	09905−00012	Snap Ring No.1 Expander	
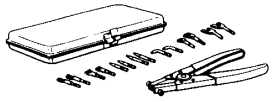	09904−00010	Expander Set .	
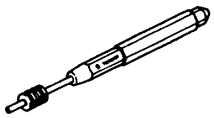	09031−00040	Pin Punch .	

PP43X−01

SSM (Special Service Materials)

	08826−00090	Seal Packing 1281, THREE BOND 1281 or equivalent (FIPG)

MANUAL TRANSMISSION (RA60)

PP444–01

SST (Special Service Tools)

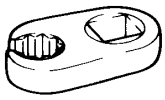	09023–00101	Union Nut Wrench 10mm	MANUAL TRANSMISSION UNIT
	09255–10012	Crankshaft Rear Bearing Remover & Replacer	MANUAL TRANSMISSION ASSEMBLY
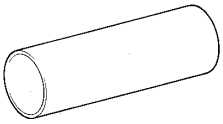	09308–14010	Replacer Pipe A	COUNTER GEAR INPUT SHAFT
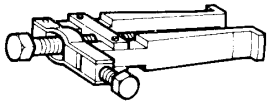	09308–55010	Oil Seal Puller	MANUAL TRANSMISSION ASSEMBLY
	09309–37010	Transmission Bearing Replacer	COUNTER GEAR INPUT SHAFT
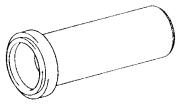	09388–40010	Input Oil Seal Replacer	MANUAL TRANSMISSION ASSEMBLY
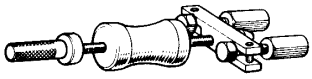	09520–00031	Rear Axle Shaft Puller	MANUAL TRANSMISSION ASSEMBLY
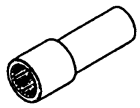	09556–16030	Differential Drive Pinion Holding Tool 28	MANUAL TRANSMISSION ASSEMBLY
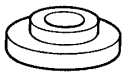	(09608–03070)	Replacer <mk2>	COUNTER GEAR
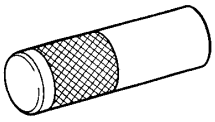	09608–06041	Front Hub Inner Bearing Cone Replacer	COUNTER GEAR
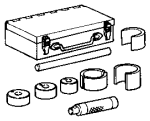	09710–20010	Front Suspension Bushing Tool Set<mk2>	OUTPUT SHAFT
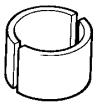	(09710–06060)	Spacer<mk2>	OUTPUT SHAFT

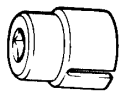	09817−16011	Back−up Light Switch Tool	MANUAL TRANSMISSION ASSEMBLY
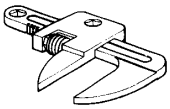	09922−10010	Variable Open Wrench	MANUAL TRANSMISSION ASSEMBLY
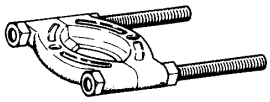	09950−00020	Bearing Remover	COUNTER GEAR OUTPUT SHAFT INPUT SHAFT
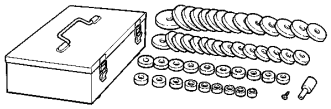	09950−60010	Replacer Set	COUNTER GEAR OUTPUT SHAFT MANUAL TRANSMISSION ASSEMBLY
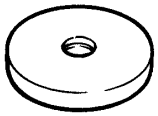	(09951−00540)	Replacer 54	COUNTER GEAR
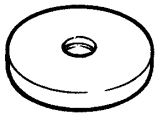	(09951−00650)	Replacer 65	OUTPUT SHAFT MANUAL TRANSMISSION ASSEMBLY
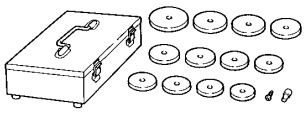	09950−60020	Replacer Set No.2	MANUAL TRANSMISSION ASSEMBLY
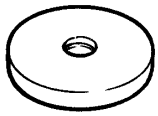	(09951−00640)	Replacer 64	MANUAL TRANSMISSION ASSEMBLY
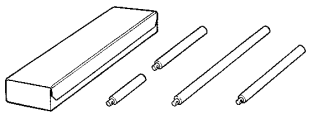	09950−70010	Handle Set	MANUAL TRANSMISSION ASSEMBLY
	(09951−07100)	Handle 100	MANUAL TRANSMISSION ASSEMBLY
	(09951−07360)	Handle 360	MANUAL TRANSMISSION ASSEMBLY
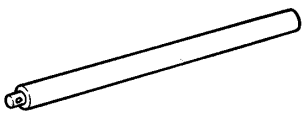	(09951−07360)	Handle 360	MANUAL TRANSMISSION ASSEMBLY

PP0EZ−03

EQUIPMENT

Dial indicator	
Torque wrench	

PROPELLER SHAFT

SST (Special Service Tools)

PP0EY−04

	09325−40010	Transmission Oil Plug	PROPELLER SHAFT ASSEMBLY
	09330−00021	Companion Flange Holding Tool	PROPELLER SHAFT ASSEMBLY
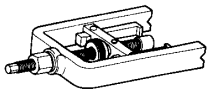	09332−25010	Universal Joint Bearing Remover & Replacer	SPIDER BEARING
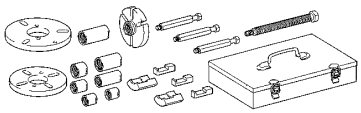	09950−30012	Puller A Set	PROPELLER SHAFT ASSEMBLY
	(09951−03010)	Upper Plate	PROPELLER SHAFT ASSEMBLY
	(09953−03010)	Center Bolt	PROPELLER SHAFT ASSEMBLY
	(09954−03010)	Arm	PROPELLER SHAFT ASSEMBLY
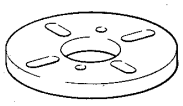	(09955−03030)	Lower Plate 130	PROPELLER SHAFT ASSEMBLY
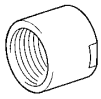	(09956−03020)	Adapter 18	PROPELLER SHAFT ASSEMBLY

PP0FT−02

EQUIPMENT

Torque wrench	
Bolt: Length: 35 mm (1.387 in.) Pitch: 1.0 mm (0.039 in.) Diam.: 6.0 mm (0.236 in.)	Airbag disposal
Tire Width: 185 mm (7.28 in.) Inner diam.: 360mm (14.17 in.)	Airbag disposal
Tire with disc wheel Width: 185 mm (7.28 in.) Inner diam.: 360 mm (14.17 in.)	Airbag disposal
Plastic bag	Airbag disposal

PP0FS−03

RECOMMENDED TOOLS

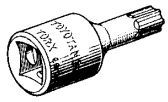	09042−00010 Torx Socket T30 .	
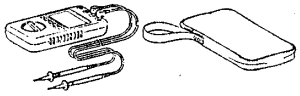	09082−00040 TOYOTA Electrical Tester.	

Torx is a registered trademark of Textron lnc.

SUPPLEMENTAL RESTRAINT SYSTEM

PP420−02

SST (Special Service Tools)

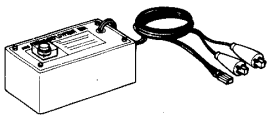	09082−00700	SRS Airbag Deployment Tool	
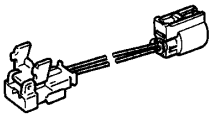	09082−00750	Airbag Deployment Wire Sub−harness No.3	
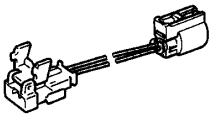	09082−00760	Airbag Deployment Wire Sub−harness No.4	
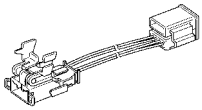	09082−00780	Airbag Deployment Wire Sub−Harness No.6	
	09082−00802	Airbag Deployment Wire Sub−Harness No.8	
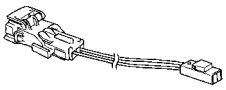	(09082−10801)	Wire A	
	(09082−30801)	Wire C	

PP09A−03

EQUIPMENT

Dial indicator with magnetic base	
Torque wrench	
Micrometer	
Voltmeter	
Ohmmeter	
Saw	

PP09B−08

LUBRICANT

Item	Capacity	Application
Front drive shaft		
Outboard joint grease (Color = Black)	205 − 225 g (7.23 − 7.94 oz.)	
Inboard joint grease (Color = Black)	190 − 210 g (6.70 − 7.41 oz.)	
Front differential Differential oil	1.15 liters (1.22 US qts., 1.01 lmp. qts.)	Hypoid gear oil API GL−5 SAE 75W−90
Rear differential (Standard type)		
Differential oil 2WD		
Standard Cab and Access Cab:	3.80 liters (4.02 US qts., 3.34 lmp. qts.)	Hypoid gear oil API GL−5
Double Cab	4.00 liters (4.23 US qts., 3.52 lmp. qts.)	Above −18˚C (0˚F) SAE 90
4WD		Below −18˚C (0˚F) SAE 80W or 80W−90
Standard Cab and Access Cab:	3.50 liters (3.70 US qts., 3.08 lmp. qts.)	
Double Cab	4.00 liters (4.23 US qts., 3.52 lmp. qts.)	
Rear differential (LSD type)		
Differential oil 2WD		
Standard Cab and Access Cab:	3.15 liters (3.33 US qts., 2.77 lmp. qts.)	Hypoid gear oil for LSD API GL−5
Double Cab	3.35 liters (3.54 US qts., 2.95 lmp. qts.)	Above −18˚C (0˚F) SAE 90
4WD		Below −18˚C (0˚F) SAE 80W or 80W−90
Standard Cab and Access Cab:	2.85 liters (3.01 US qts., 2.51 lmp. qts.)	
Double Cab	3.35 liters (3.54 US qts., 2.95 lmp. qts.)	

PP099−05

RECOMMENDED TOOLS

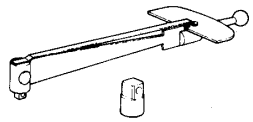	09025−00010	Torque Wrench (30 kgf−cm)	
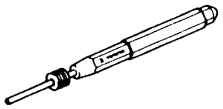	09031−00030	Pin Punch .	
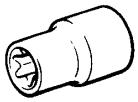	09044−00010	Torx Socket E14 .	
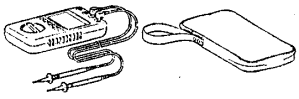	09082−00040	TOYOTA Electrical Tester.	
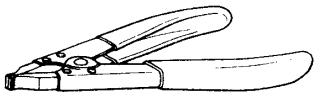	09905−00012	Snap Ring No.1 Expander .	
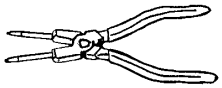	09905−00013	Snap Ring Pliers .	

Torx is a registered trademark of Textron Inc.

PP25E–01

SSM (Special Service Materials)

08826–00090	Seal Packing 1281, THREE BOND 1281 or equivalent (FIPG)	Front differential
08833–00070	Adhesive 1324, THREE BOND 1324 or equivalent	Front differential
08833–00100	THREE BOND 1360K or equivalent	Rear differential

SUSPENSION AND AXLE

PP25D–04

SST (Special Service Tools)

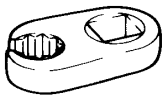	09023–00101	Union Nut Wrench 10mm	Rear axle
	09223–15020	Oil Seal & Bearing Replacer	Front differential
	09223–15030	Oil Seal & Bearing Replacer	Front axle
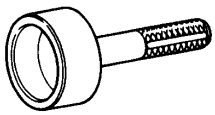	09223–56010	Crankshaft Rear Oil Seal Replacer	Rear axle
	09226–10010	Crankshaft Front & Rear Bearing Replacer	Front differential
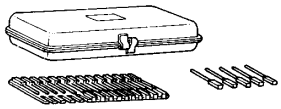	09240–00020	Wire Gauge Set	Front drive shaft
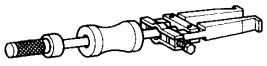	09308–00010	Oil Seal Puller	Front differential Rear axle
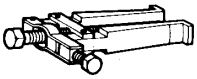	09308–10010	Oil Seal Puller	Front differential Rear differential
	09309–37010	Transmission Bearing Replacer	Front differential Front suspension
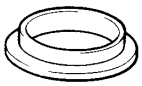	09316–12010	Transfer Bearing Replacer	Rear differential
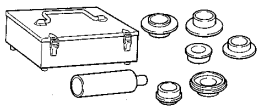	09316–60011	Transmission & Transfer Bearing Replacer	Rear axle
	(09316–00051)	Replacer ”D”	

	09318–12010	Transfer Bearing Adjusting Nut Wrench	Front axle (2WD)
	09330–00021	Companion Flange Holding Tool	Front differential Rear differential
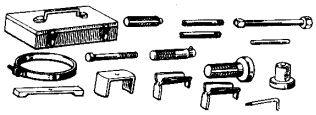	09350–20015	TOYOTA Automatic Transmission Tool Set	Front differential
	(09369–20040)	Piston Spring Compressor Set	
	09502–12010	Differential Bearing Replacer	Front differential Front suspension
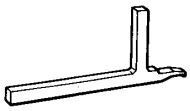	09504–22012	Differential Side Bearing Replacer	Rear differential
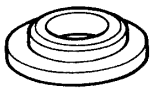	09506–30012	Differential Drive Pinion Rear Bearing Cone Replacer	Front differential
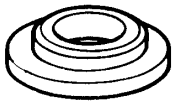	09506–35010	Differential Drive Pinion Rear Bearing Replacer	Rear differential
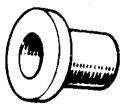	09515–30010	Rear Wheel Bearing Replacer	Rear axle
	09520–01010	Drive Shaft Remover Attachment	Front drive shaft
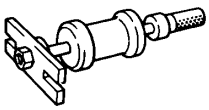	09520–24010	Differential Side Gear Shaft Puller	Front drive shaft
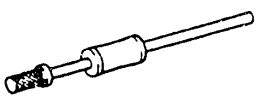	(09520–32040)	Shocker Set	
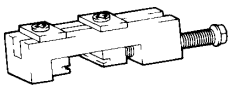	09521–24010	Drive Shaft Boot Clamping Tool	Front drive shaft

	09521−25011	Rear Axle Shaft Puller	Rear axle
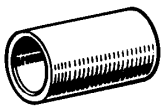	09523−36010	Rear Axle Hub Guide Tool	Rear differential
	09527−17011	Rear Axle Shaft Bearing Remover	Front axle
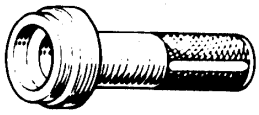	09554−22010	Differential Oil Seal Replacer	Front differential
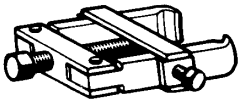	09556−22010	Drive Pinion Front Bearing Remover	Front differential Rear differential
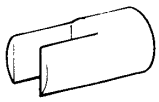	09564−32011	Differential Preload Adaptor	Front differential
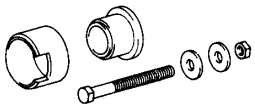	09570−22011	Differential Mounting Cushion Remover & Replacer	Front differential
	09608−32010	Steering Knuckle Oil Seal Replacer	Front differential
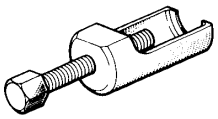	09610−20012	Pitman Arm Puller	Front suspension
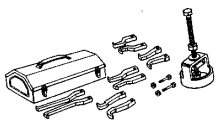	09612−65014	Steering Worm Bearing Puller	Front differential
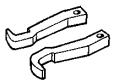	(09612−01020)	Claw ”B”	
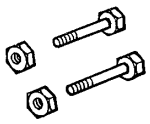	(09612−01050)	Hanger Pin with Nut	
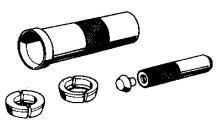	09613−26010	Steering Worm Bearing Cone Remover	Front suspension

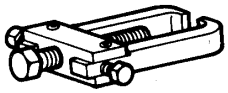	09628–62011	Ball Joint Puller	Front drive shaft Front suspension
	09630–24014	Steering Rack Oil Seal Tool Set	Rear suspension
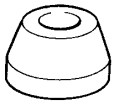	(09620–24041)	Seal Ring Guide	
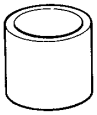	09631–12090	Seal Ring Tool	Front suspension
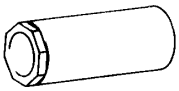	09631–20060	Bearing Guide Nut Wrench	Front suspension
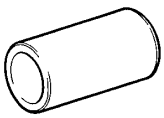	09632–36010	Steering Vane Pump Bearing Replacer	Front suspension Rear suspension
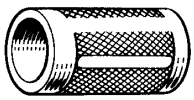	09636–20010	Upper Ball Joint Dust Cover Replacer	Front differential
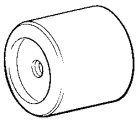	09649–17010	Steering Knuckle Tool	Front axle Rear differential
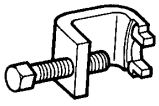	09650–17011	Hub Bolt Remover	Front axle Rear axle
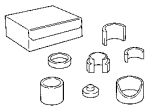	09710–28012	Front Suspension Bushing Tool Set	Rear suspension
	(09710–07062)	Bushing Replacer	
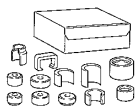	09710–30021	Suspension Bushing Tool Set	
	(09710–03051)	Bushing Replacer	Front axle Front suspension

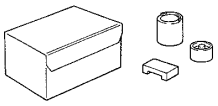	09710−30041	Rear Suspension Bushing Tool Set	Rear suspension
	(09710−03211)	Remover	
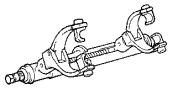	09727−30021	Coil Spring Compressor	Front suspension
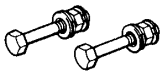	(09727−00010)	Bolt Set	
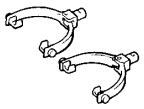	(09727−00021)	Arm Set	
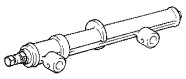	(09727−00031)	Compressor	
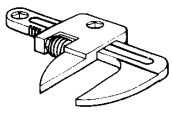	09922−10010	Variable Open Wrench	Front suspension
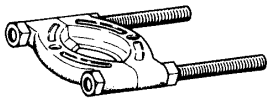	09950−00020	Bearing Remover	Front drive shaft Front differential Front suspension Rear differential
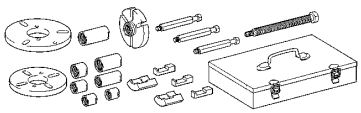	09950−30012	Puller A Set	
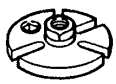	(09951−03010)	Upper Plate	Front differential Rear differential
	(09953−03010)	Center Bolt	Front differential Rear differential
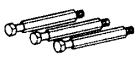	(09954−03010)	Arm	Front differential Rear differential
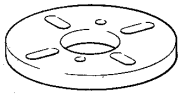	(09955−03030)	Lower Plate 130	Front differential Rear differential

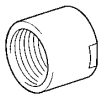	(09956–03020) Adapter 18	Front differential
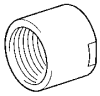	(09956–03050) Adapter 24	Rear differential
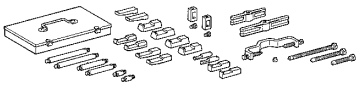	09950–40011 Puller B Set	
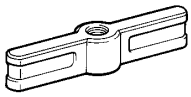	(09951–04010) Hanger 150	Front axle Front differential Front suspension Rear differential
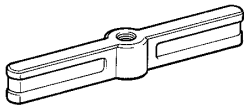	(09951–04020) Hanger 200	Front axle
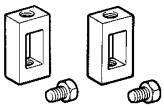	(09952–04010) Slide Arm	Front axle Front differential Front suspension Rear differential
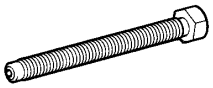	(09953–04020) Center Bolt 150	Front axle Front differential Front suspension Rear differential
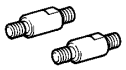	(09954–04010) Arm 25	Front axle Front differential Front suspension Rear differential
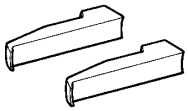	(09955–04011) Claw No.1	Front differential
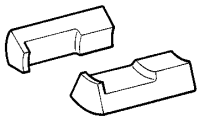	(09955–04031) Claw No.3	Front axle Front suspension
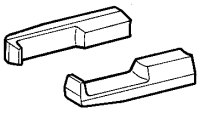	(09955–04061) Claw No.6	Front differential Rear differential
	(09957–04010) Attachment	Front axle Front differential Front suspension Rear differential
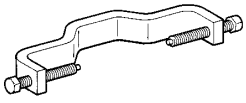	(09958–04011) Holder	Front axle Front differential Front suspension Rear differential

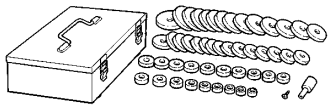	09950−60010 Replacer Set	
	(09951−00350) Replacer 35	Rear suspension
	(09951−00380) Replacer 38	Front differential
	(09951−00480) Replacer 48	Front differential Rear differential
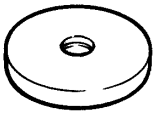	(09951−00540) Replacer 54	Front differential
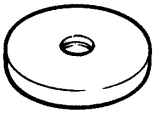	(09951−00560) Replacer 56	Rear axle
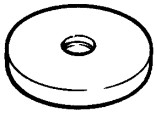	(09951−00610) Replacer 61	Rear axle
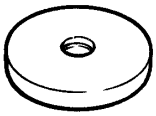	(09951−00640) Replacer 64	Rear differential
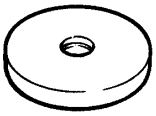	(09951−00650) Replacer 65	Front axle Front differential
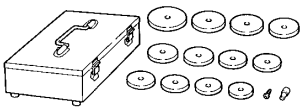	09950−60020 Replacer Set No.2	
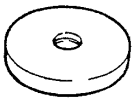	(09951−00680) Replacer 68	Front suspension
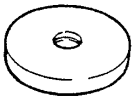	(09951−00710) Replacer 71	Rear axle Rear differential
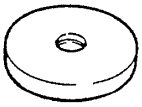	(09951−00790) Replacer 79	Front differential

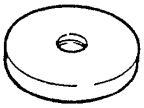	(09951–00810) Replacer 81	Front axle
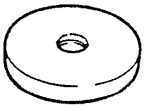	(09951–00890) Replacer 89	Rear axle
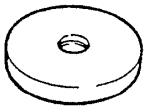	(09951–00910) Replacer 91	Front axle Rear differential
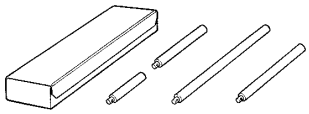	09950–70010 Handle Set	Front axle, Front differential Rear axle Rear differential Rear suspension
	(09951–07150) Handle 150	

PP43K−01

EQUIPMENT

Graduated cylinder	
Transmission jack	

PP43J−01

RECOMMENDED TOOLS

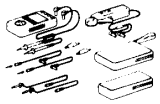	09082−00050 TOYOTA Electrical Tester Set.	

SFI (1GR−FE)

SST (Special Service Tools)

PP43I−01

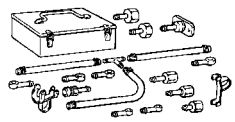	09268−41047	Injection Measuring Tool Set	INJECTOR FUEL PUMP
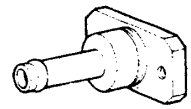	(09268−41091)	NO.7 Union	INJECTOR
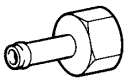	09268−41140	Adapter	INJECTOR
	09268−41400	Clamp	INJECTOR
	(90467−13001)	Clip	FUEL PUMP
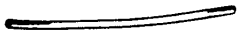	(95336−08070)	Hose	INJECTOR FUEL PUMP
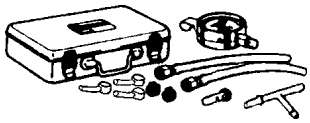	09268−45014	EFI Fuel Pressure Gauge	FUEL PUMP
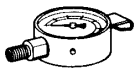	(09268−41200)	Gauge	FUEL PUMP
	(09268−41220)	Hose	FUEL PUMP
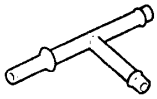	(09268−41250)	T Joint	FUEL PUMP
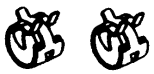	(90467−13001)	Clip	FUEL PUMP
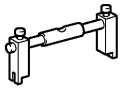	09808−14020	Retainer Tool, Fuel Pump	FUEL PUMP

	(09808−01410)	Holder	FUEL PUMP
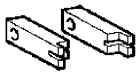	(09808−01420)	Claw	FUEL PUMP
	(09808−01430)	Bolt	FUEL PUMP
	09842−30070	Wiring ”F” EFI Inspection	SFI SYSTEM
	09842−30080	EFI Inspection Wire ”H”	INJECTOR

PP0NI−02

EQUIPMENT

Graduated cylinder	Injector
OBD II scan tool	
Sound scope	Injector
Torque wrench	
Vacuum gauge	

PP0U4–05

RECOMMENDED TOOLS

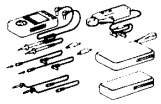	09082–00050	TOYOTA Electrical Tester Set.	
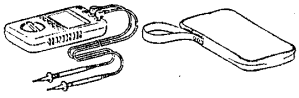	(09082–00040)	TOYOTA Electrical Tester.	
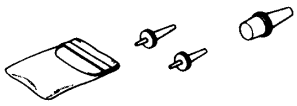	09258–00030	Hose Plug Set .	Plug for vacuum hose, fuel hose etc.

SFI (2UZ−FE)

SST (Special Service Tools)

PP433−01

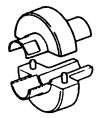	09268−21010	Fuel Hose Puller	
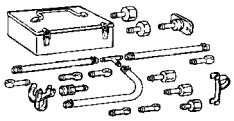	09268−41047	Injection Measuring Tool Set	
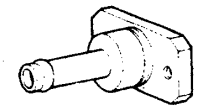	(09268−41091)	NO.7 Union	
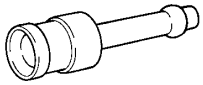	(09268−41110)	Adaptor	
	(09268−41300)	Clamp	
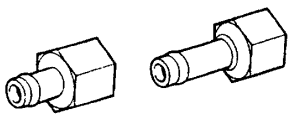	(09268−52011)	Injection Measuring Attachment	
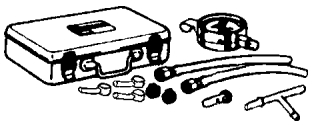	09268−45014	EFI Fuel Pressure Gauge	
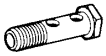	(09268−41190)	Adapter	
	(90405−06167)	I Union	
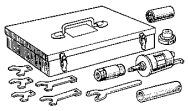	09612−24014	Steering Gear Housing Overhaul Tool Set	
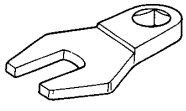	(09617−24011)	Steering Rack Wrench	Fuel pressure pulsation damper
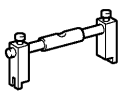	09808−14020	Retainer Tool, Fuel Pump	

	(09808−01410) Holder	
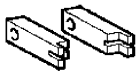	(09808−01420) Claw	
	(09808−01430) Bolt	
	09842−30070 Wiring ”F” EFI Inspection	

PP0FW−04

EQUIPMENT

Caliper gauge	PS vane pump (1GR−FE, 2UZ−FE)
Vernier calipers	PS vane pump (1GR−FE, 2UZ−FE)
Dial indicator	PS gear
Feeler gauge	PS vane pump (1GR−FE, 2UZ−FE)
Micrometer	PS vane pump (1GR−FE, 2UZ−FE)
Torque wrench	

PP0FX−03

LUBRICANT

Item	Capacity	Classification
Power steering fluid Total	1.0 liters (1.1 US qts, 0.9 Imp.qts)	ATF DEXRON® II or III

PP25I−02

RECOMMENDED TOOLS

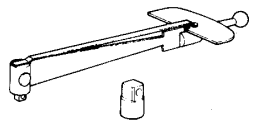	09025−00010	Small Torque Wrench (30 kgf−cm)	PS vane pump PS gear
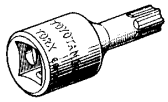	09042−00010	Torx Socket T30 .	Steering column

Torx is a registered trademark of Textron Inc.

PP1B9−08

SSM (Special Service Materials)

08833−00080	Adhesive 1344 THREE BOND 1344 LOCTITE 242 or equivalent	PS gear

STEERING

SST (Special Service Tools)

PP447–01

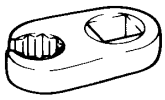	09023–12701	Union Nut Wrench 17mm	PS gear
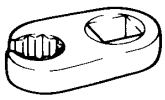	09023–38401	Union Nut Wrench 14mm	PS gear
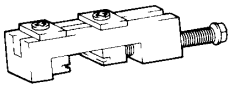	09521–24010	Drive Shaft Boot Clamping Tool	PS gear
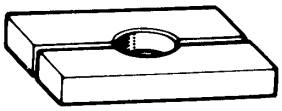	09527–20011	Rear Axle Shaft Bearing Remover	PS gear
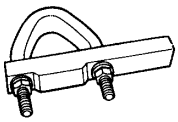	09612–00012	Rack & Pinion Steering Rack Housing Stand	PS gear
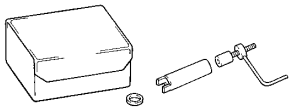	09612–07010	Main Shaft Retaining Ring Remover & Replacer	Steering column
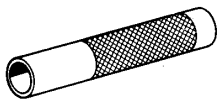	09612–22011	Tilt Handle Bearing Replacer	PS gear
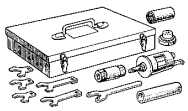	09612–24014	Steering Gear Housing Overhaul Tool Set	
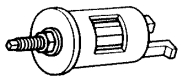	(09613–22011)	Steering Rack Shaft Bushing Puller	PS gear
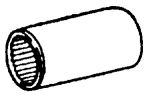	09616–00011	Steering Worm Bearing Adjusting Socket	PS gear
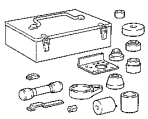	09630–00014	Power Steering Gear Housing Overhaul Tool Set	
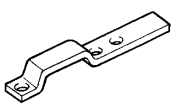	(09631–00132)	Vane Pump Bracket	PS vane pump (1GR–FE)

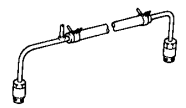	09631–12071	Steering Rack Oil Seal Test Tool	PS gear
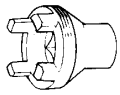	09631–16010	Cylinder End Stopper Nut Wrench	PS gear
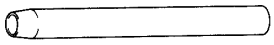	09631–20051	Steering Rack Cover ”C”	PS gear
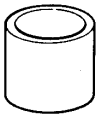	09631–20081	Seal Ring Tool	PS gear
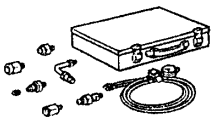	09640–10010	Power Steering Pressure Gauge Set	
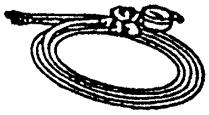	(09641–01010)	Gauge Assy	Power steering fluid
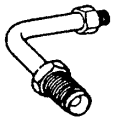	(09641–01030)	Attachment B	Power steering fluid
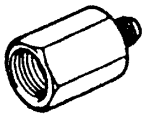	(09641–01060)	Attachment E	Power steering fluid
	09816–30010	Oil Pressure Switch Socket	PS gear
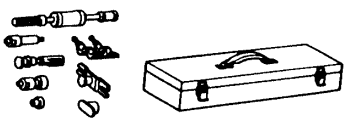	09910–00015	Puller Set	
	(09911–00011)	Puller Clamp	Steering column
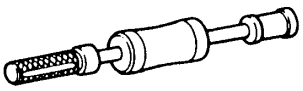	(09912–00010)	Puller Slide Hammer	Steering column
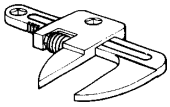	09922–10010	Variable Open Wrench	PS gear

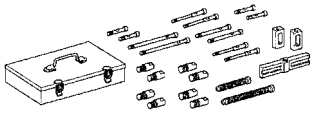	09950−50013 Puller C Set	
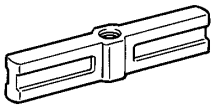	(09951−05010) Hanger 150	Steering column
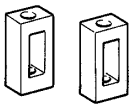	(09952−05010) Slide Arm	Steering column
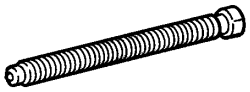	(09953−05020) Center Bolt 150	Steering column
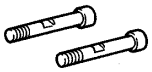	(09954−05021) Claw No.2	Steering column
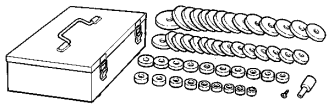	09950−60010 Replacer Set	
	(09951−00180) Replacer 18	PS gear
	(09951−00250) Replacer 25	PS gear
	(09951−00260) Replacer 26	PS gear
	(09951−00280) Replacer 28	PS vane pump (1GR−FE)
	(09951−00300) Replacer 30	PS gear
	(09951−00310) Replacer 31	PS gear
	(09951−00320) Replacer 32	PS gear

	(09951–00330) Replacer 33	PS vane pump (2UZ–FE)
	(09951–00340) Replacer 34	PS gear
	(09951–00360) Replacer 36	PS gear
	(09951–00400) Replacer 40	Steering column (Double Cab)
	(09951–00430) Replacer 43	Steering column (Standard Cab, Access Cab)
	(09951–00460) Replacer 46	Steering column PS gear
	(09951–00490) Replacer 49	PS gear
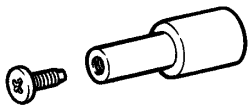	(09952–06010) Adapter	PS gear
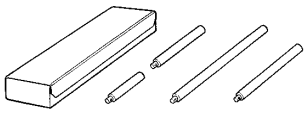	09950–70010 Handle Set	
	(09951–07100) Handle 100	PS vane pump (1GR–FE, 2UZ–FE)
	(09951–07150) Handle 150	Steering column PS gear
	(09951–07200) Handle 200	PS gear
	(09951–07360) Handle 360	Steering column PS gear

PP439−01

EQUIPMENT

Dial indicator	Commutator
Magnetic finger	Steel ball
Press	Armature bearing, Magnetic switch terminal kit
Pull scale	Brush spring
Sandpaper	Commutator
Torque wrench	
V−block	Commutator
Vernier calipers	Commutator, Brush

STARTING (1GR−FE)

RECOMMENDED TOOLS

PP438−01

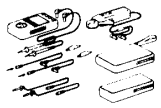	09082−00050	TOYOTA Electrical Tester Set.	
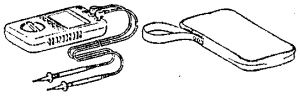	(09082−00040)	TOYOTA Electrical Tester.	
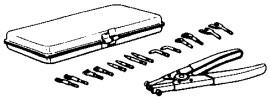	09904−00010	Expander Set .	
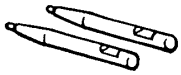	(09904−00050)	No. 4 Claw	

PP1B1−03

EQUIPMENT

Dial indicator	Commutator
Magnetic finger	Steel ball
Press	Armature bearing, Magnetic switch terminal kit
Pull scale	Brush spring
Sandpaper	Commutator
Torque wrench	
V−block	Commutator
Vernier calipers	Commutator, Brush

PP3WS−01

RECOMMENDED TOOLS

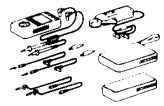	09082−00050 TOYOTA Electrical Tester Set.	
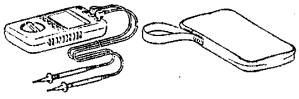	(09082−00040) TOYOTA Electrical Tester.	

STARTING (2UZ−FE)

SST (Special Service Tools)

PP1AZ−07

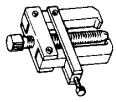	09286−46011	Injection Pump Spline Shaft Puller	Armature bearing
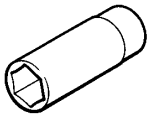	09810−38140	Starter Magnet Switch Nut Wrench 14	
	09820−00031	Alternator Rear Bearing Replacer	Armature front bearing

PP441−01

EQUIPMENT

Dial indicator	
Micrometer	
Torque wrench	
Feeler gauge	
Magnetic finger	
Steel square	

PP442−01

LUBRICANT

Transfer oil	1.0 liters (1.1 US qts, 0.9 Imp. Qts)	API GL−4 or GL−5 SAE 75W−90

PP440−01

RECOMMENDED TOOLS

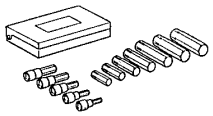	09040−00011	Hexagon Wrench Set .	
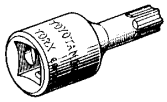	09042−00010	Torx Socket T30 .	
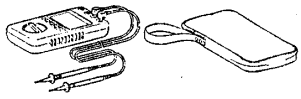	(09082−00040)	TOYOTA Electrical Tester.	
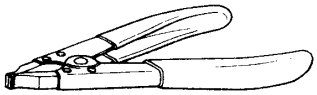	09905−00012	Snap Ring No.1 Expander	

PP443–01

SSM (Special Service Materials)

08826–00090	Seal Packing 1281, THREE BOND 1281 or equivalent (FIPG)	
08833–00080	Adhesive 1344 THREE BOND 1344 LOCTITE 242 or equivalent	

TRANSFER

PP43Y–01

SST (Special Service Tools)

	09223–15020	Oil Seal & Bearing Replacer	PLANETARY GEAR
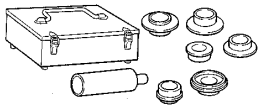	09316–60011	Transmission & Transfer Bearing Replacer	OIL SEAL REAR OUTPUT SHAFT
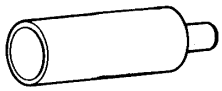	(09316–00011)	Replacer Pipe	OIL SEAL REAR OUTPUT SHAFT
	(09316–00071)	Replacer ”F”	REAR OUTPUT SHAFT
	09330–00021	Companion Flange Holding Tool	TRANSFER ASSEMBLY
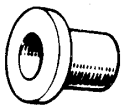	09515–30010	Rear Wheel Bearing Replacer	PLANETARY GEAR
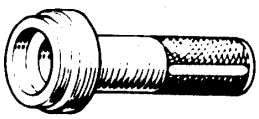	09554–22010	Differential Oil Seal Replacer	OIL SEAL
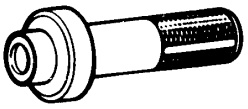	09554–30011	Differential Oil Seal Replacer	PLANETARY GEAR
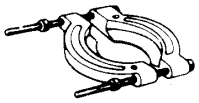	09555–55010	Differential Drive Pinion Bearing Replacer	PLANETARY GEAR REAR OUTPUT SHAFT DRIVEN SPROCKET
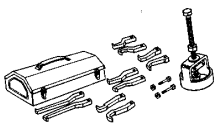	09612–65014	Steering Worm Bearing Puller	PLANETARY GEAR
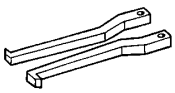	(09612–01030)	Claw ”C”	PLANETARY GEAR
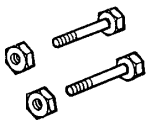	(09612–01050)	Hanger Pin with Nut	PLANETARY GEAR

	09950−40011 Puller B Set	TRANSFER ASSEMBLY
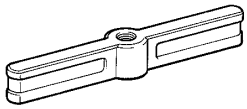	(09951−04020) Hanger 200	TRANSFER ASSEMBLY
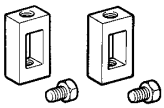	(09952−04010) Slide Arm	TRANSFER ASSEMBLY
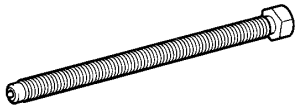	(09953−04030) Center Bolt 200	TRANSFER ASSEMBLY
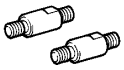	(09954−04010) Arm 25	TRANSFER ASSEMBLY
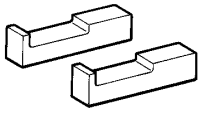	(09955−04051) Claw No.5	TRANSFER ASSEMBLY
	(09957−04010) Attachment	TRANSFER ASSEMBLY
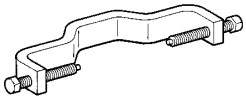	(09958−04011) Holder	TRANSFER ASSEMBLY
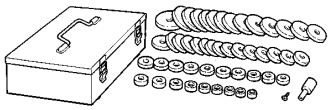	09950−60010 Replacer Set	OIL SEAL PLANETARY GEAR
	(09951−00220) Replacer 22	OIL SEAL
	(09951−00350) Replacer 35	OIL SEAL
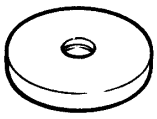	(09951−00570) Replacer 57	PLANETARY GEAR
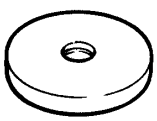	(09951−00590) Replacer 59	OIL SEAL

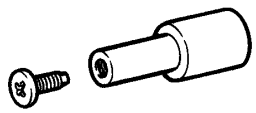	(09952−06010) Adapter	OIL SEAL
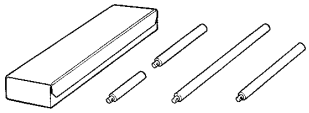	09950−70010 Handle Set	OIL SEAL PLANETARY GEAR
	(09951−07100) Handle 100	OIL SEAL PLANETARY GEAR

PROPELLER SHAFT ASSEMBLY (2WD)

COMPONENTS

PR01G−07

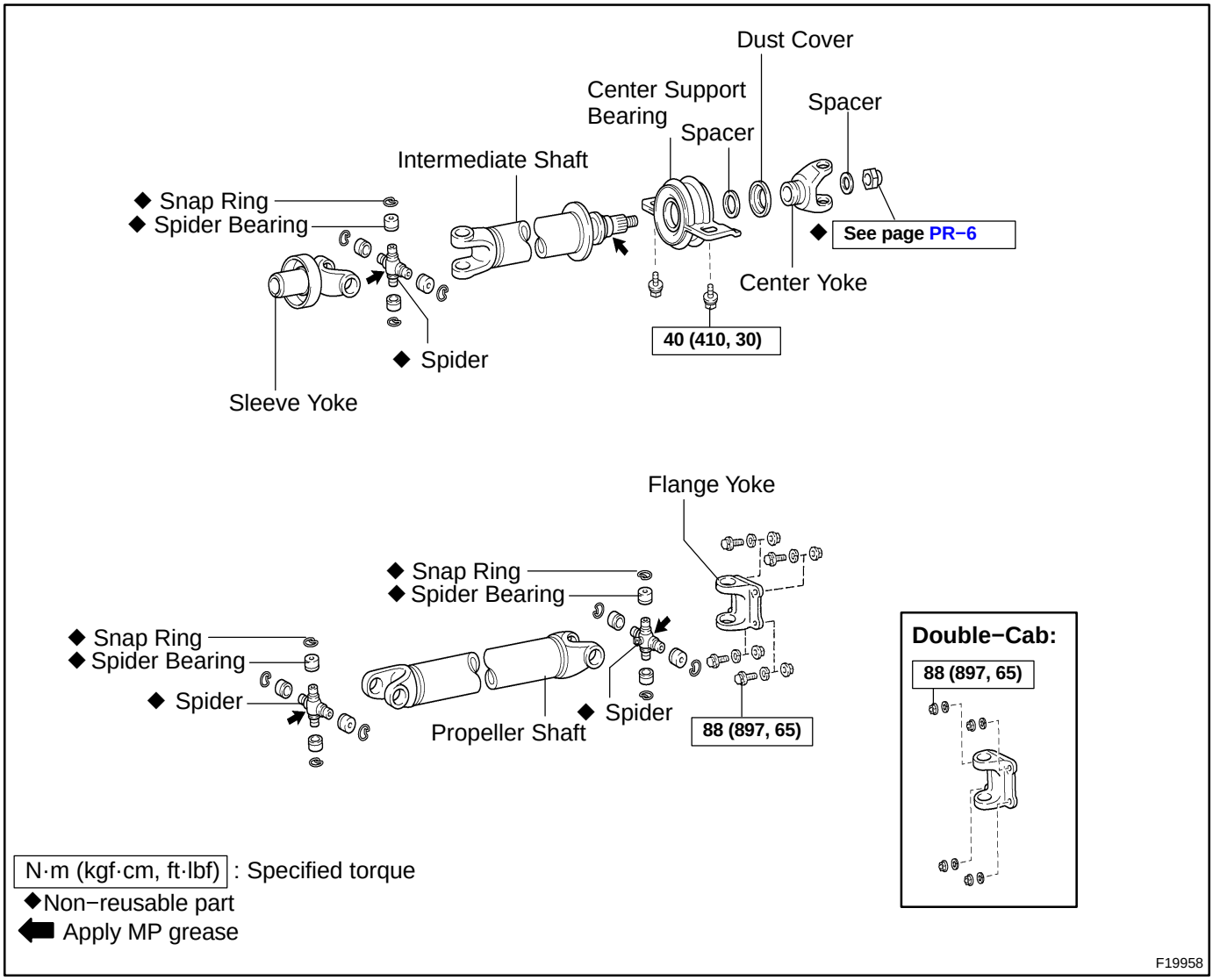

F19958

PR05K−02

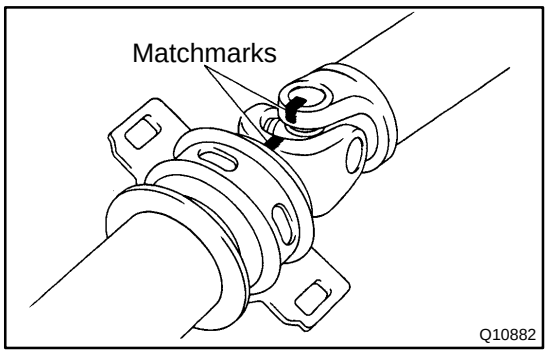

DISASSEMBLY

NOTICE:

Be careful not to grip the propeller shaft tube too tightly in a vise as this will cause deformation.

1. SEPARATE PROPELLER SHAFT AND INTERMEDIATE SHAFT

(a) Place matchmarks on the yoke and propeller shaft.

(b) Disassemble the center yoke
(See SPIDER BEARING REPLACEMENT on page PR−17).

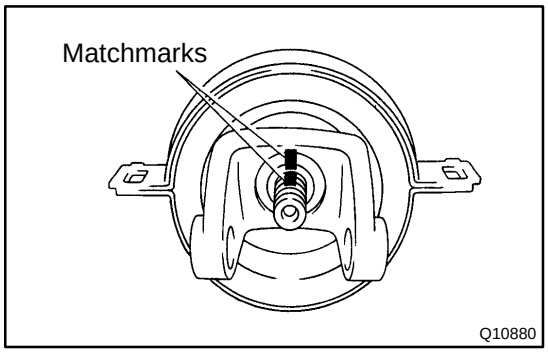

2. REMOVE CENTER SUPPORT BEARING FROM INTERMEDIATE SHAFT

(a) Using a hammer and chisel, loosen the staked part of the nut.

(b) Clamp the yoke in a vise and remove the spacer and nut.

(c) Place matchmarks on the yoke and shaft.

(d) Using a brass bar and hammer, remove the center yoke, dust cover, spacer and center support bearing from the intermediate shaft.

PR01J−03

INSPECTION

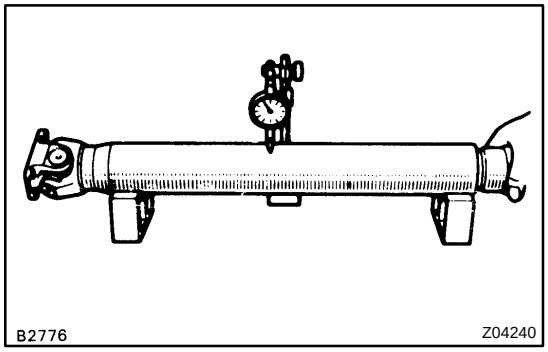

NOTICE:

Be careful not to grip the propeller shaft tube too tightly in a vise as this will cause deformation.

1. INSPECT PROPELLER SHAFT AND INTERMEDIATE SHAFT FOR DAMAGE OR RUNOUT

Using a dial indicator, check the runout of each shaft.

Maximum runout: 0.8 mm (0.031 in.)

If shaft runout is greater than the maximum, replace it.

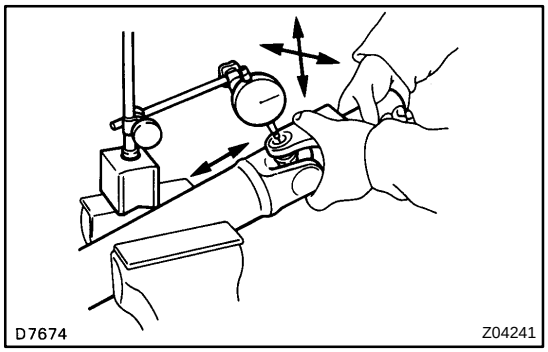

2. INSPECT SPIDER BEARING

(a) Inspect the spider bearing for wear or damage.

(b) Using a dial indicator, check the spider bearing axial play by turning the yoke of the flange while holding the shaft tightly.

Maximum bearing axial play: 0.05 mm (0.0020 in.)

If the spider bearing axial play exceeds the maximum, replace the spider bearing (See page PR−17).

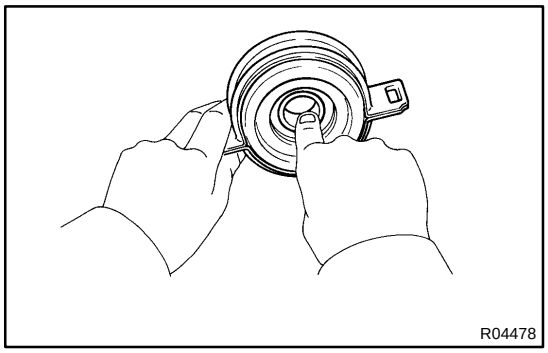

3. INSPECT CENTER SUPPORT BEARING FOR WEAR OR DAMAGE

Check that the bearing turns freely.

If the bearing is damaged, worn, or does not turn freely, replace it.

PR05M−03

INSTALLATION

1. INSTALL PROPELLER SHAFT

(a) Remove SST from the transmission.
SST 09325−40010

(b) Insert the yoke into the transmission.

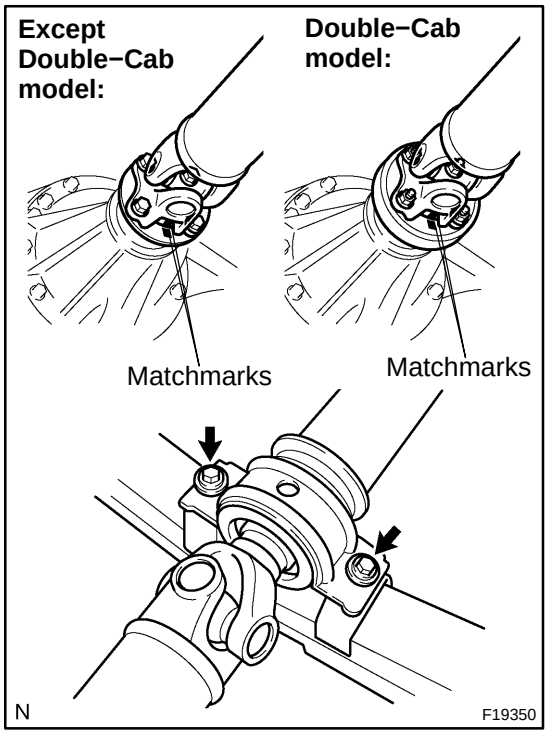

(c) Temporarily install the center support bearing with the 2 mounting bolts.

HINT:
Make sure the bearing is installed with the drain hole facing downwards.

(d) Except Double−Cab model:
Align the matchmarks on the flanges and connect the flanges with the 4 bolts, washers and nuts.

(e) Torque the 4 bolts.
Torque: 88 N·m (897 kgf·cm, 65 ft·lbf)

(f) Double−Cab model:
Align the matchmarks on the flanges and connect the flanges with the 4 washers and nuts.

(g) Torque the 4 nuts.
Torque: 88 N·m (897 kgf·cm, 65 ft·lbf)

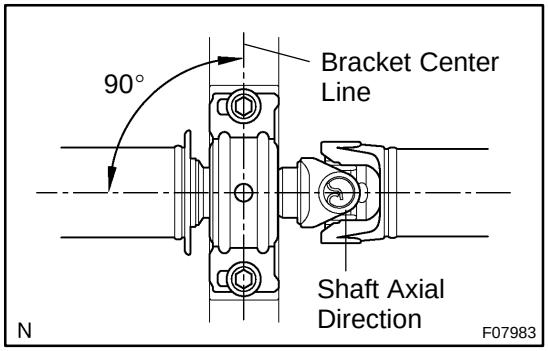

2. ADJUST CENTER SUPPORT BEARING

HINT:

- With the vehicle unloaded, adjust the center support bearing to keep the angles, as shown.
- Under the same conditions, check the center line in the axial direction. Adjust the bearing if necessary.

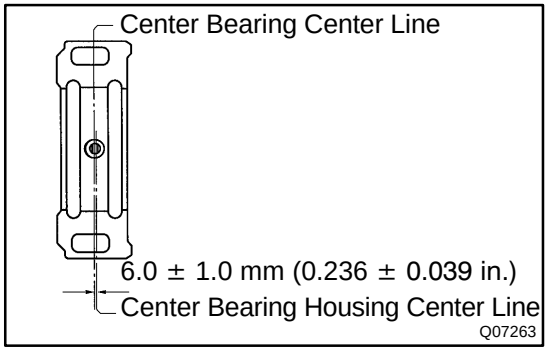

- The center bearing center line and center bearing housing center line must be adjusted to within 6.0 ± 1.0 mm (0.236 ± 0.039 in.) of each other in the vehicle's longitudinal direction with the vehicle unloaded.

Torque the 2 bolts.
Torque: 40 N·m (410 kgf·cm, 30 ft·lbf)

PR05L−02

REASSEMBLY

NOTICE:

Be careful not to grip the propeller shaft tube too tightly in a vise as this will cause deformation.

HINT:

When removing or installing any part, make sure that each joint is facing the correct direction, as shown in the illustration below.

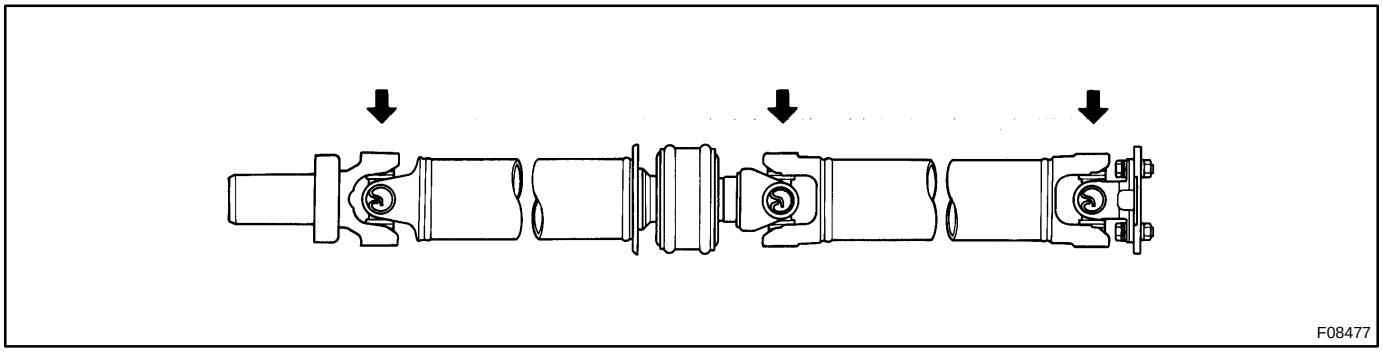

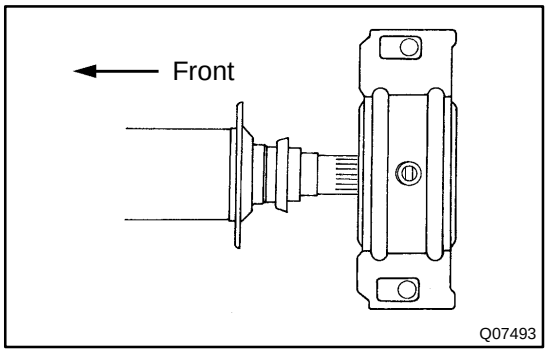

1. INSTALL CENTER SUPPORT BEARING ON INTERMEDIATE SHAFT

HINT:

Install the center support bearing in the direction shown.

2. INSTALL CENTER YOKE ON INTERMEDIATE SHAFT

(a) Coat the splines of the intermediate shaft with MP grease.

(b) Install the spacer and dust cover.

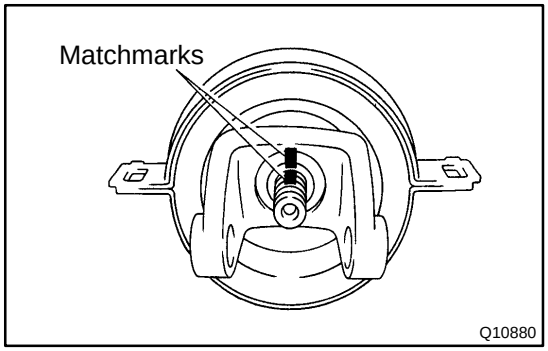

(c) Place the center yoke on the shaft and align the matchmarks.

HINT:

If replacing either the center yoke or intermediate shaft, reassemble them so that the front side yoke of the intermediate shaft and the center yoke are facing the same direction.

(d) Install the spacer.

(e) Clamp the yoke in a vise, and press in the bearing by tightening with a new nut.

Torque: 181 N·m (1,845 kgf·cm, 133 ft·lbf)

(f) Loosen the nut.

(g) Torque the nut again.

Torque: 82 N·m (835 kgf·cm, 60 ft·lbf)

(h) Using a hammer and punch, stake the nut.

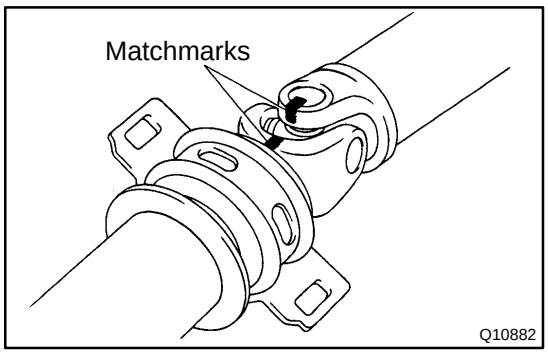

3. CONNECT PROPELLER SHAFT AND INTERMEDIATE SHAFT

Assemble the center yoke aligning matchmarks (See SPIDER BEARING REPLACEMENT on page PR−17).

PR01H−05

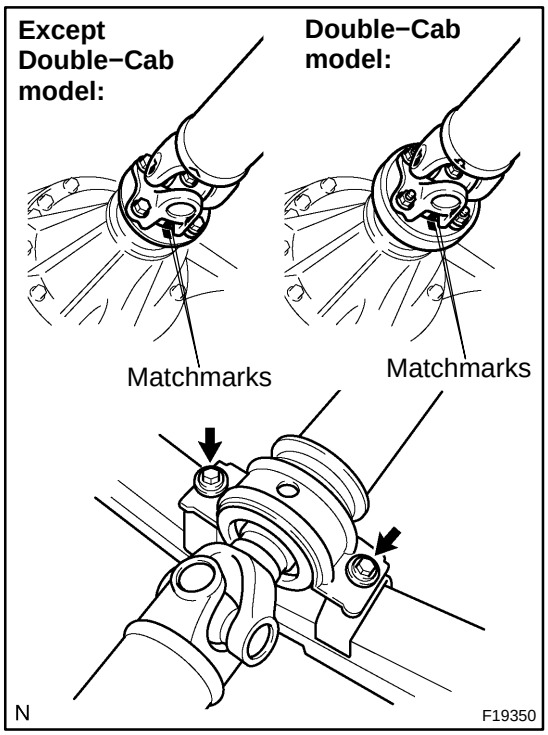

REMOVAL

REMOVE PROPELLER SHAFT

(a) Place matchmarks on the differential and propeller shaft flanges.

(b) Except Double−Cab model:
Remove the 4 bolts, washers and nuts.

(c) Double−Cab model:
Remove the 4 nuts and washers.

(d) Remove the 2 mounting bolts and center support bearing from the frame crossmember.

(e) Pull out the propeller shaft yoke from the transmission.

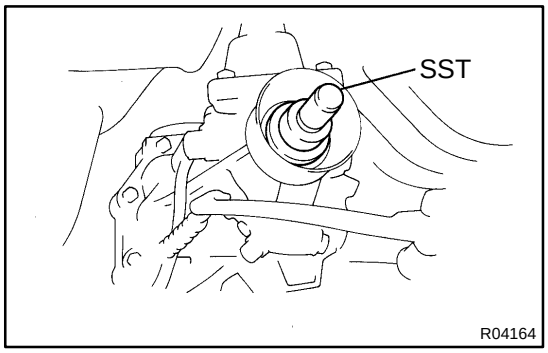

(f) Insert SST in the transmission to prevent oil leakage.
SST 09325−40010

PROPELLER SHAFT ASSEMBLY (4WD)

PR01M−06

COMPONENTS

Front propeller shaft:

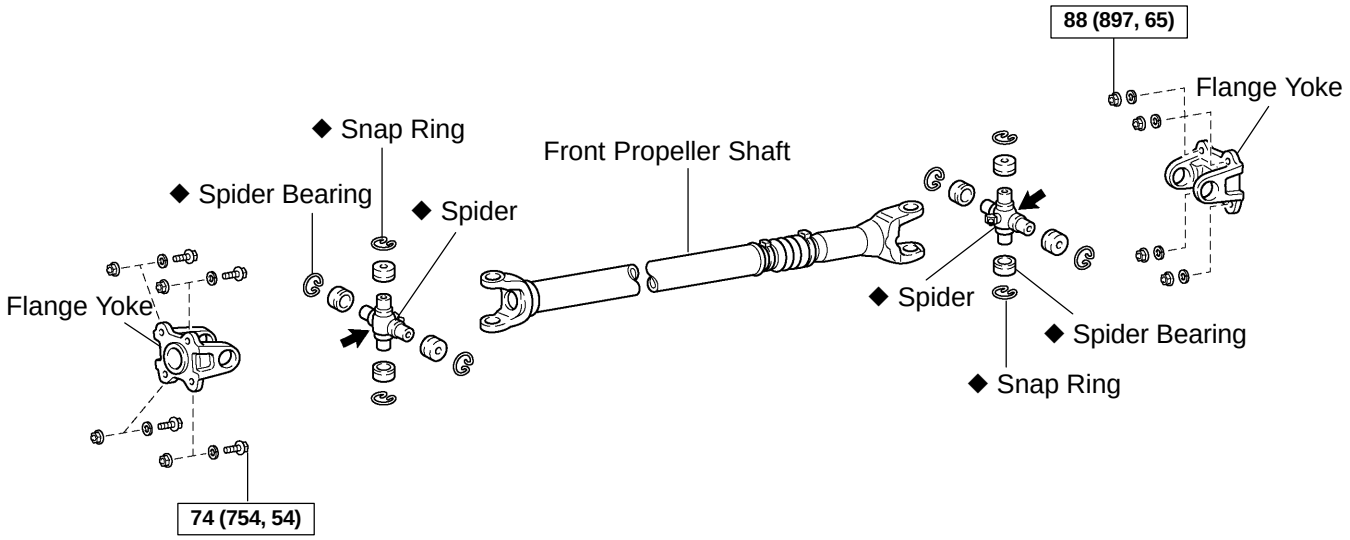

Rear propeller shaft:

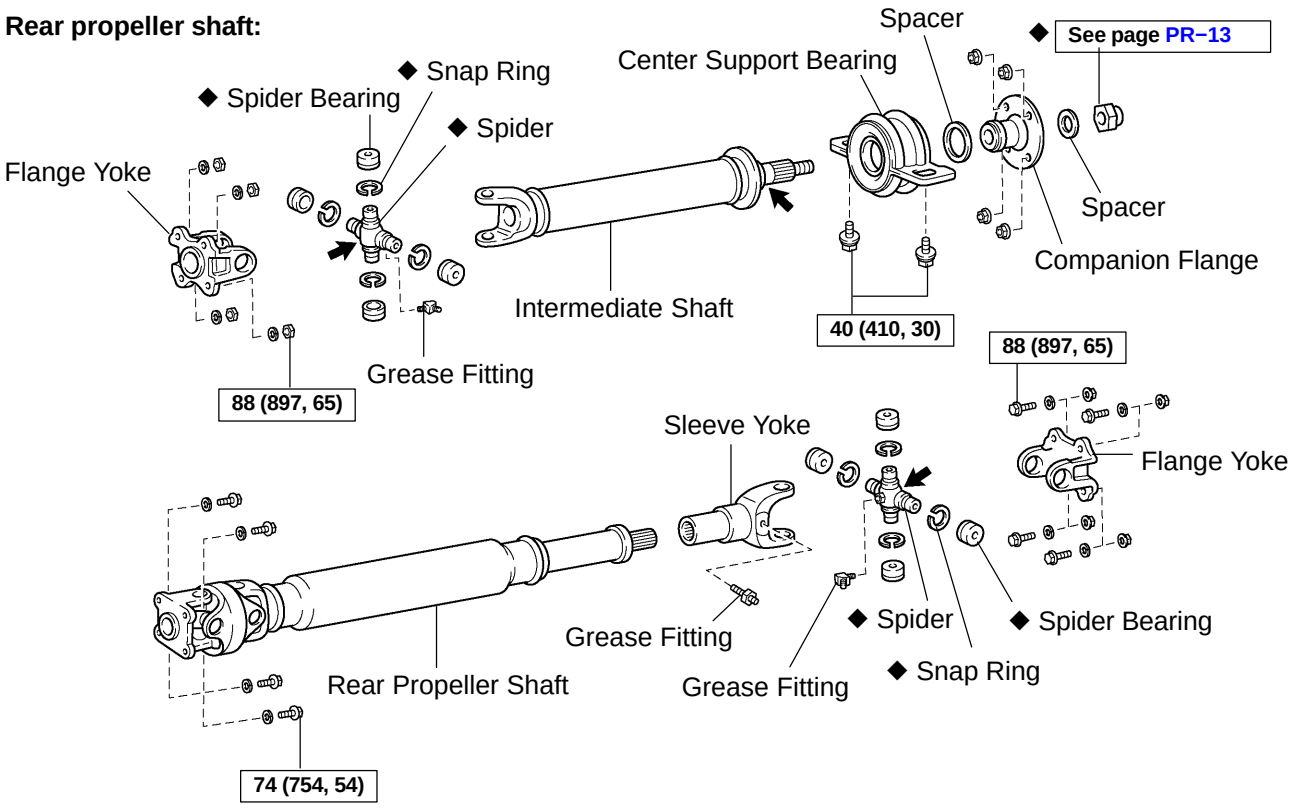

N·m (kgf·cm, ft·lbf) : Specified torque

◆ Non−reusable part

⬅ Apply MP grease

N

F19352

PR05O−03

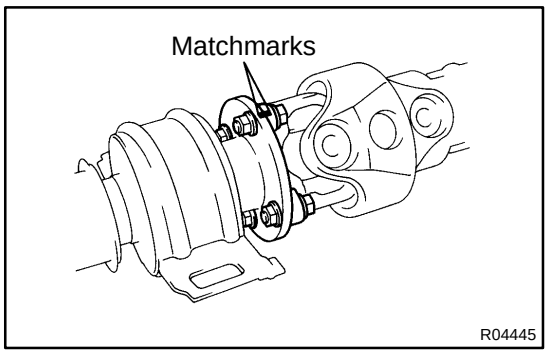

DISASSEMBLY

NOTICE:

Be careful not to grip the propeller shaft tube too tightly in a vise as this will cause deformation.

1. Rear propeller shaft:
SEPARATE PROPELLER SHAFT AND INTERMEDIATE SHAFT

(a) Place matchmarks on the flanges.

(b) Remove the 4 nuts, bolts and washers.

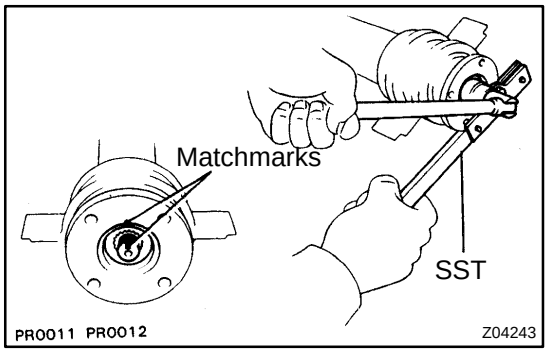

2. Rear propeller shaft:
REMOVE CENTER SUPPORT BEARING FROM INTERMEDIATE SHAFT

(a) Using a hammer and chisel, loosen the staked part of the nut.

(b) Using SST to hold the flange, remove the nut and spacer.
SST 09330−00021

(c) Place matchmarks on the flange and shaft.

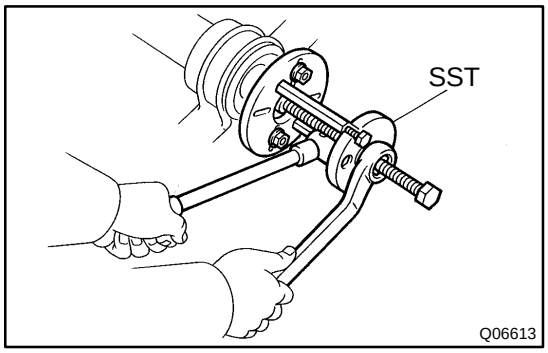

(d) Using SST, remove the flange from the intermediate shaft.
SST 09950−30012 (09951−03010, 09953−03010, 09954−03010, 09955−03030, 09956−03020)

(e) Remove the spacer and center support bearing from the intermediate shaft.

PR01P−03

INSPECTION

NOTICE:

Be careful not to grip the propeller shaft tube too tightly in a vise as this will cause deformation.

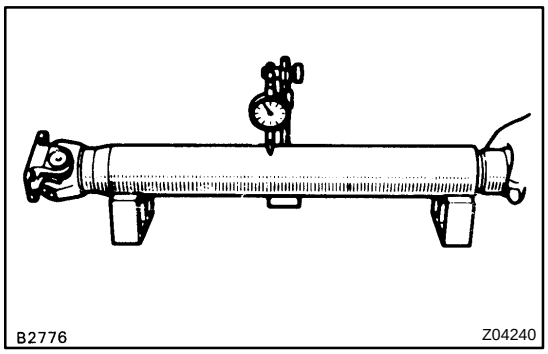

1. INSPECT PROPELLER SHAFT AND INTERMEDIATE SHAFT FOR DAMAGE OR RUNOUT

Using a dial indicator, check the runout of each shaft.

Maximum runout: 0.8 mm (0.031 in.)

If shaft runout is greater than the maximum, replace it.

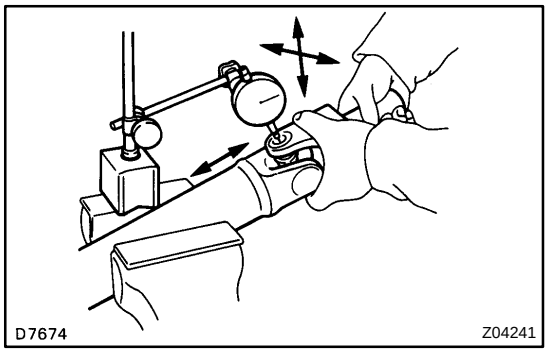

2. INSPECT SPIDER BEARING

(a) Inspect the spider bearing for wear or damage.

(b) Using a dial indicator, check the spider bearing axial play by turning the yoke of the flange while holding the shaft tightly.

Maximum bearing axial play:

Front propeller shaft: 0.05 mm (0.0020 in.)

Rear propeller shaft: 0 mm (0 in.)

If the spider bearing axial play exceeds the maximum, replace it (See page PR−17).

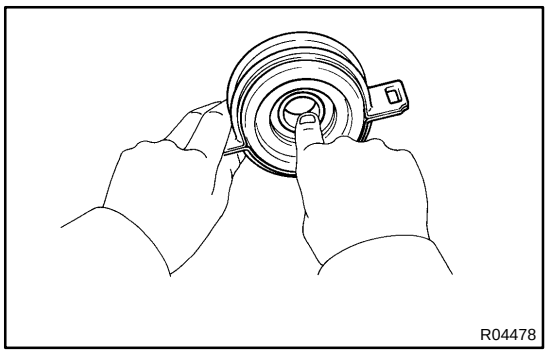

3. Rear propeller shaft:

INSPECT CENTER SUPPORT BEARING FOR WEAR OR DAMAGE

Check that the bearing turns freely.

If the bearing is damaged, worn, or does not turn freely, replace it.

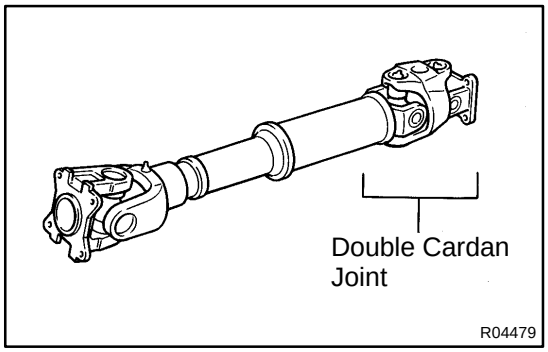

4. Rear propeller shaft:

INSPECT DOUBLE CARDAN JOINT PROPELLER SHAFT

(a) Inspect the shaft for wear or damage.

(b) Inspect the double cardan joint for wear or damage.

If any problem is found, replace the propeller shaft assembly.

HINT:

A double cardan joint is used on the rear propeller shaft.

PR05P−02

INSTALLATION

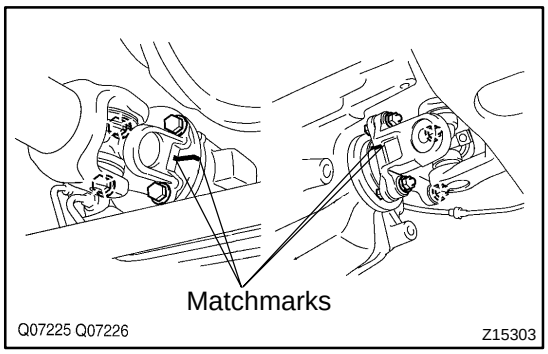

1. INSTALL FRONT PROPELLER SHAFT

(a) Align the matchmarks on the propeller shaft and differential flanges, and connect the flanges with the 4 bolts, nuts and washers.

(b) Torque the 4 bolts.
Torque: 74 N·m (754 kgf·cm,54 ft·lbf)

(c) Align the matchmarks on the propeller shaft and transfer flanges, and connect the flanges with the 4 nuts and washers.

(d) Torque the 4 nuts.
Torque: 88 N·m (897 kgf·cm, 65 ft·lbf)

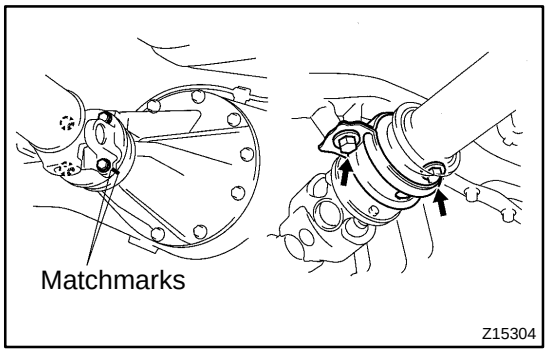

2. INSTALL REAR PROPELLER SHAFT

(a) Align the matchmarks on the propeller shaft and differential flanges, and connect the flanges with the 4 bolts, washers and nuts.

(b) Torque the 4 bolts.
Torque: 88 N·m (897 kgf·cm, 65 ft·lbf)

(c) Temporarily install the center support bearing with the 2 mounting bolts.

HINT:
Make sure the bearing is installed with the drain hole facing downwards.

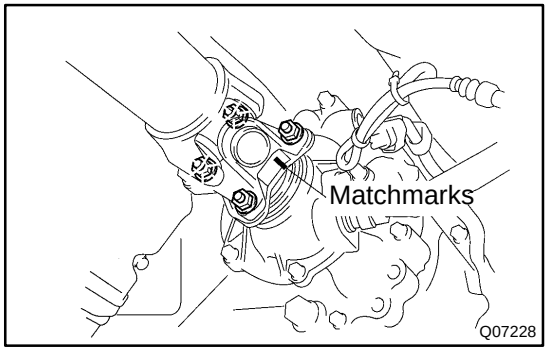

(d) Align the matchmarks on the propeller shaft and transfer flanges, and connect the flanges with the 4 nuts and washers.

(e) Torque the 4 nuts.
Torque: 88 N·m (897 kgf·cm, 65 ft·lbf)

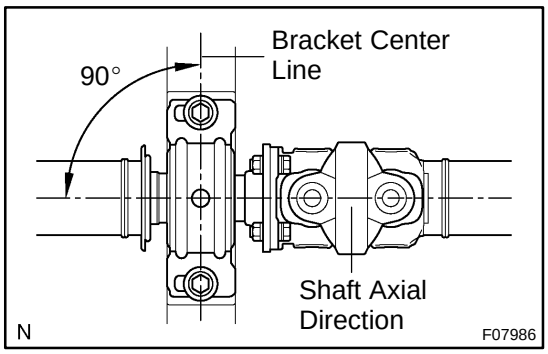

3. ADJUST CENTER SUPPORT BEARING

HINT:

- With the vehicle unloaded, adjust the center support bearing to keep the angles, as shown.
- Under the same conditions, check the center line in the axial direction. Adjust the bearing if necessary.

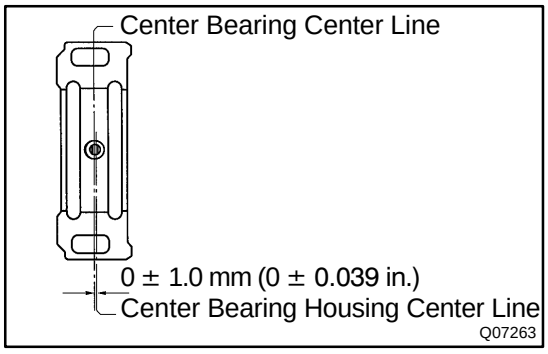

- The center bearing center line and center bearing housing center line must be adjusted to within 0 ±1.0 mm of each other in the vehicle's longitudinal direction with the vehicle unloaded.

Torque the 2 bolts.

Torque: 40 N·m (410 kgf·cm, 30 ft·lbf)

REASSEMBLY

NOTICE:

Be careful not to grip the propeller shaft tube too tightly in a vise as this will cause deformation.

HINT:

When removing or installing any part, make sure that each joint is facing the correct direction, as shown in the illustration below.

PR01Q−03

Front propeller shaft:

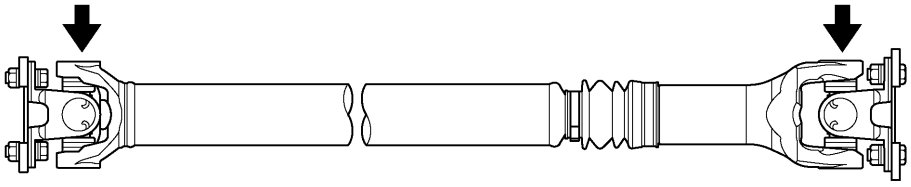

Rear propeller shaft:

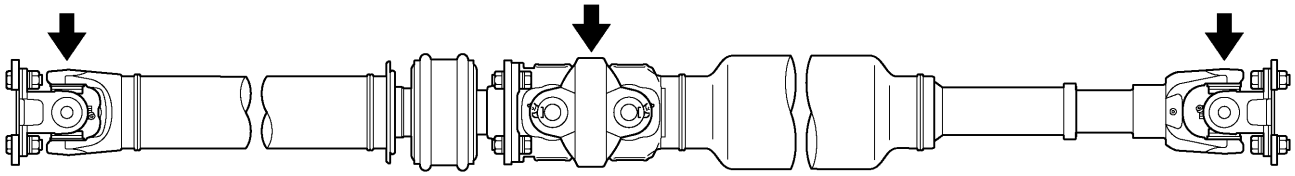

N

F19335

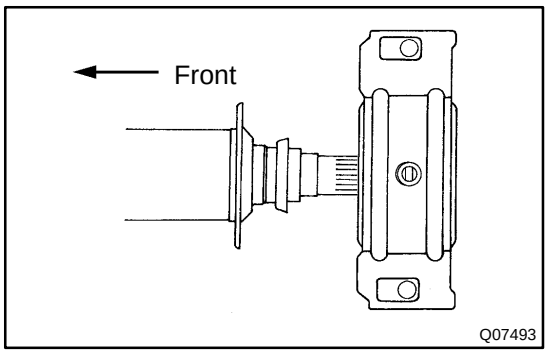

Q07493

1. Rear propeller shaft:
INSTALL CENTER SUPPORT BEARING ON INTERMEDIATE SHAFT

HINT:

Install the center support bearing in the direction shown.

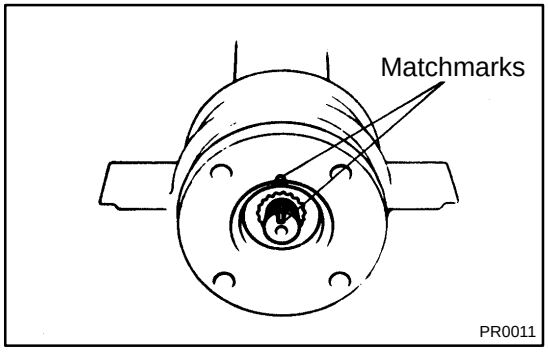

PR0011

2. Rear propeller shaft:
INSTALL FLANGE ON INTERMEDIATE SHAFT

(a) Coat the splines of the intermediate shaft with MP grease.

(b) Install the spacer.

(c) Place the flange on the shaft and align the matchmarks.

HINT:

If replacing either the center flange or intermediate shaft, reassemble it so that the front side flange yoke of the intermediate shaft and the rear side flange yoke of the propeller shaft are facing in the same direction.

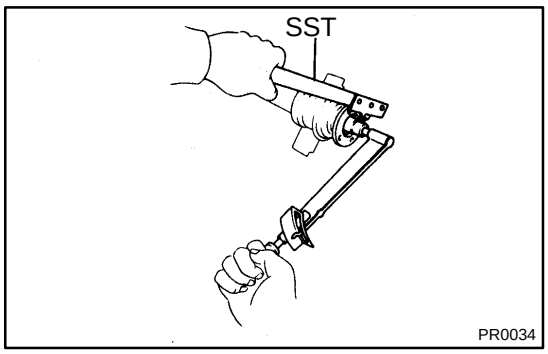

(d) Install the spacer.

(e) Using SST to hold the flange, press in the bearing by tightening with a new nut.
SST 09330−00021
Torque: 181 N·m (1,845 kgf·cm, 133 ft·lbf)

(f) Loosen the nut.

(g) Torque the nut again.
Torque: 82 N·m (835 kgf·cm, 60 ft·lbf)

(h) Using a hammer and punch, stake the nut.

3. Rear propeller shaft:
INSTALL PROPELLER SHAFT

(a) Align the matchmarks on the flanges and connect the flanges with the 4 bolts, washers and nuts.

HINT:
If replacing either the center flange or intermediate shaft, reassembly it so that the front side flange yoke of the intermediate shaft and the rear side flange yoke of the propeller shaft are facing in the same direction.

(b) Torque the bolts.
Torque: 74 N·m (754 kgf·cm, 54 ft·lbf)

PR05N−05

REMOVAL

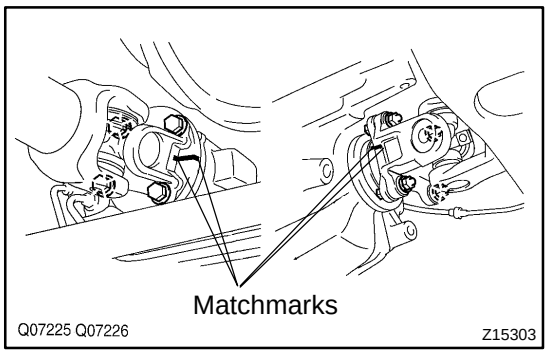

1. REMOVE FRONT PROPELLER SHAFT

(a) Place matchmarks on the differential and propeller shaft flange.

(b) Remove the 4 bolts, washers and nuts, and disconnect the propeller shaft from the differential.

(c) Use a rope to suspend the front edge of the propeller shaft.

(d) Place matchmarks on the transfer and propeller shaft flanges.

(e) Remove the 4 nuts and washers.

(f) Remove the propeller shaft from the transfer flange.

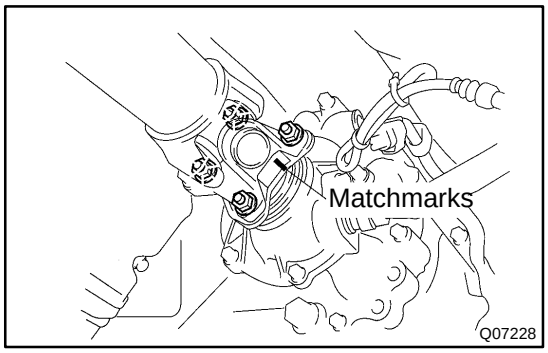

2. REMOVE REAR PROPELLER SHAFT

(a) Place matchmarks on the transfer and propeller shaft flanges.

(b) Remove the 4 nuts and washers, and disconnect the propeller shaft from the transfer flange.

(c) Use a rope to suspend the front edge of the propeller shaft.

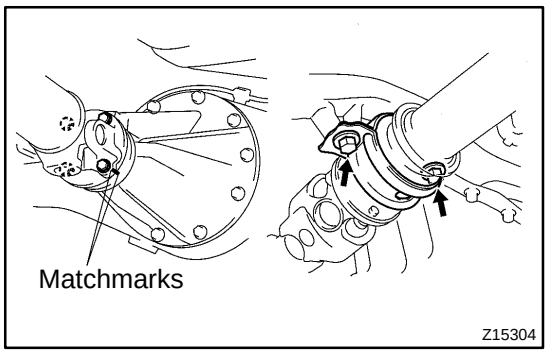

(d) Remove the 2 mounting bolts and center support bearing.

(e) Place matchmarks on the differential and propeller shaft flanges.

(f) Remove the 4 bolts, washers and nuts.

(g) Remove the propeller shaft from the differential.

SPIDER BEARING

PR08F−01

REPLACEMENT

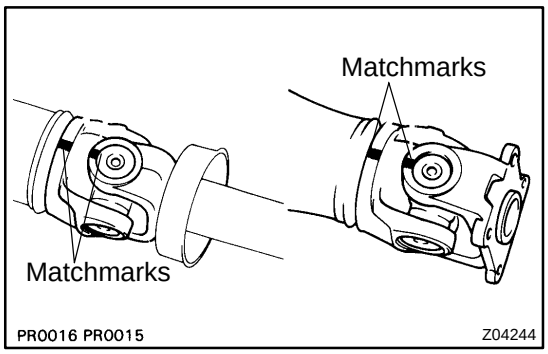

1. PLACE MATCHMARKS ON SHAFT AND YOKE

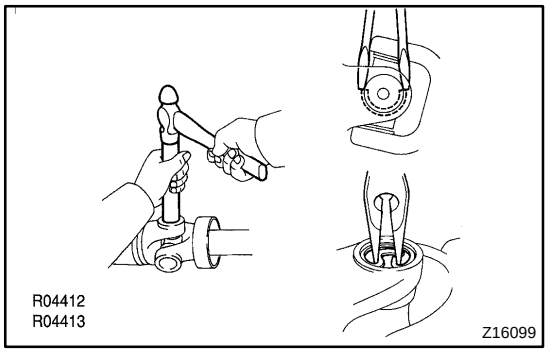

2. REMOVE SNAP RING

(a) Using a brass bar and hammer, slightly tap in the bearing outer race.

(b) 4WD rear propeller shaft:
Using 2 screwdrivers, remove the 4 snap rings from the grooves.

(c) 2WD and 4WD front propeller shaft:
Using needle nose pliers, remove the 4 snap rings from the grooves.

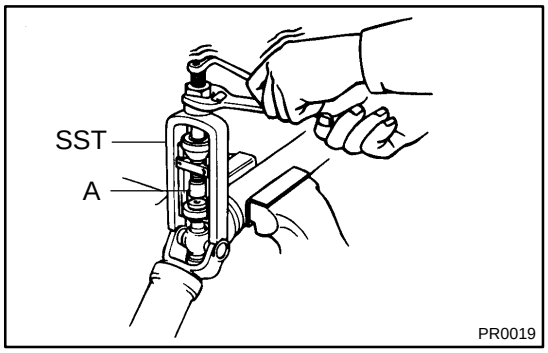

3. REMOVE SPIDER BEARING

(a) Using SST, push out the bearing from the flange yoke.
SST 09332−25010

HINT:
Sufficiently raise the part indicated by ”A” so that it does not come into contact with the bearing.

(b) Clamp the bearing outer race in a vise and tap off the flange with a hammer.

HINT:
Remove the bearing on the opposite side using the same procedure.

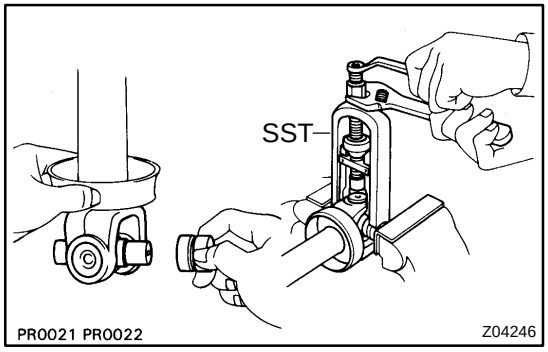

(c) Install the 2 removed bearing outer races to the spider, and clamp them in a vise.

(d) Using SST, push out the bearing from the sleeve yoke.
SST 09332−25010

(e) Clamp the outer bearing race in a vise and tap off the yoke with a hammer.

HINT:
Remove the bearing on the opposite side using the same procedure.

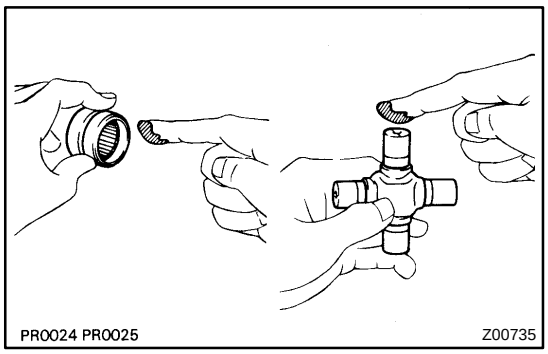

4. INSTALL SPIDER BEARING

(a) Apply MP grease to a new spider and bearings.

HINT:

Be careful not to apply too much grease.

(b) Align the matchmarks on the yoke and shaft.

(c) Fit the spider to the yoke.

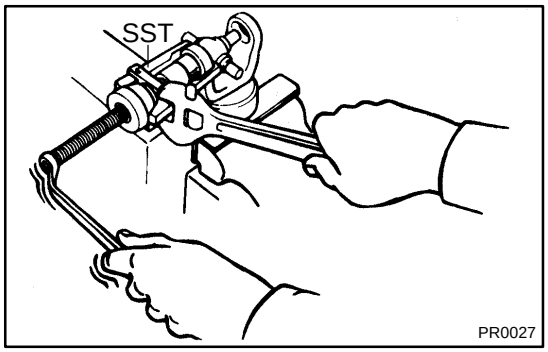

(d) Using SST, install the bearing to the spider.
SST 09332−25010

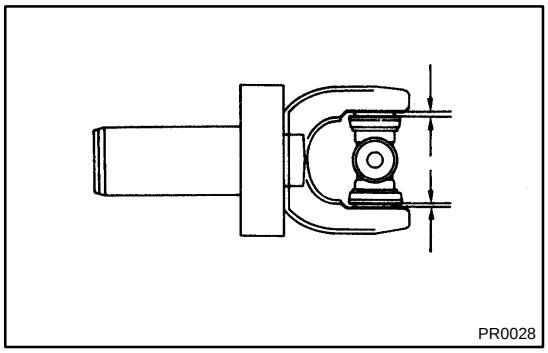

(e) Using SST, adjust both bearings so that the snap ring grooves are at maximum and are equal in width.

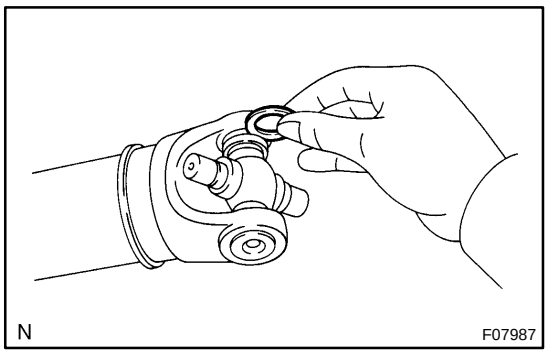

5. INSTALL SNAP RINGS

(a) Install 2 new snap rings of equal thickness which will allow for 0 to 0.05 mm (0 to 0.0020 in.) axial play.

HINT:

Do not reuse the snap rings.

4WD rear propeller shaft:

Color	Mark	Thickness mm (in.)
−	九	2.44 to 2.46 (0.0961 to 0.0969)
−	10	2.46 to 2.48 (0.0969 to 0.0976)
−	1	2.28 to 2.30 (0.0898 to 0.0906)
−	2	2.30 to 2.32 (0.0906 to 0.0913)
−	None	2.32 to 2.34 (0.0913 to 0.0921)
Brown	−	2.34 to 2.36 (0.0921 to 0.0929)
Blue	−	2.36 to 2.38 (0.0929 to 0.0937)
−	6	2.38 to 2.40 (0.0937 to 0.0945)
−	7	2.40 to 2.42 (0.0945 to 0.0953)
−	8	2.42 to 2.44 (0.0953 to 0.0961)
−	J	2.18 to 2.20 (0.0858 to 0.0866)
−	K	2.20 to 2.22 (0.0866 to 0.0874)
−	F	2.22 to 2.24 (0.0874 to 0.0882)
−	G	2.24 to 2.26 (0.0882 to 0.0890)
−	H	2.26 to 2.28 (0.0890 to 0.0898)
−	A	2.48 to 2.50 (0.0976 to 0.0984)
−	B	2.50 to 2.52 (0.0984 to 0.0992)
−	C	2.52 to 2.54 (0.0992 to 0.1000)
−	D	2.54 to 2.56 (0.1000 to 0.1008)
−	E	2.56 to 2.58 (0.1008 to 0.1016)

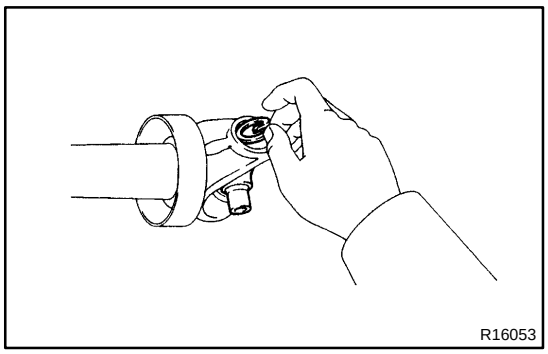

2WD and 4WD front propeller shaft:

Color	Thickness mm (in.)
Blue	1.638 (0.0645)
Yellow	1.588 (0.0625)
Silver	1.537 (0.0605)
Copper	1.511 (0.0595)
Black	1.486 (0.0585)
Red	1.435 (0.0565)
Green	1.384 (0.0545)

(b) Using a hammer, tap the yoke until there is no clearance between the bearing outer race and snap ring.

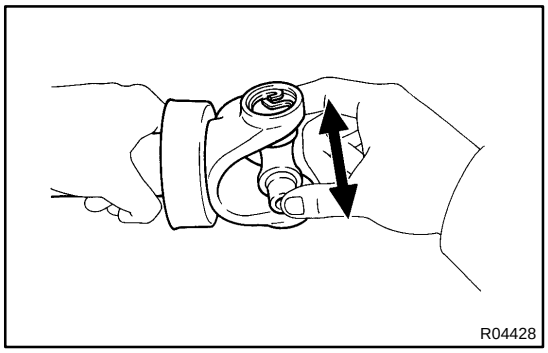

6. CHECK SPIDER BEARING

(a) Check that the spider bearing moves smoothly.

(b) Check the spider bearing axial play.

Maximum bearing axial play:
4WD rear propeller shaft: 0 mm (0 in.)
2WD and 4WD front propeller shaft:
0.05 mm (0.0020 in.)

HINT:

- Install new spider bearings on the flange side using the procedure described above.

- When replacing the rear propeller shaft spider on 4WD vehicles, be sure that the grease fitting assembly holes are facing in the direction shown in the illustration below.

SPIDER GREASE FITTING ASSEMBLY DIRECTION FOR 4WD REAR PROPELLER SHAFT

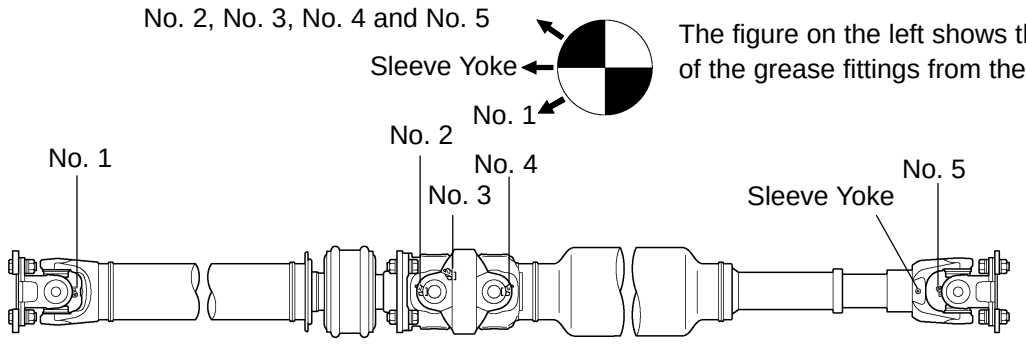

N F19336

TROUBLESHOOTING

PR01F−05

PROBLEM SYMPTOMS TABLE

Use the table below to help find the cause of problems. The numbers indicate the priority of the likely cause of the problem. Check each part in order. If necessary, replace these parts.

2WD:

Symptom	Suspected Area	See page
Noise	1. Center support bearing (Worn)	PR−5
	2. Sleeve yoke spline (Worn)	−
	3. Spider bearing (Worn or stuck)	PR−5
Vibration	1. Transmission extension housing rear bushing (Runout)	−
	2. Sleeve yoke spline (Stuck)	−
	3. Propeller shaft (Runout)	PR−5
	4. Propeller shaft (Imbalance)	PR−5

4WD:

Symptom	Suspected Area	See page
Noise	1. Center support bearing (Worn)	PR−12
	2. Sleeve yoke spline (Worn)	−
	3. Spider bearing (Worn or stuck)	PR−12
Vibration	1. Transmission extension housing rear bushing (Runout)	−
	2. Sleeve yoke spline (Stuck)	−
	3. Propeller shaft (Runout)	PR−12
	4. Propeller shaft (Imbalance)	PR−12

AIRBAG SENSOR ASSEMBLY

RS10N−02

COMPONENTS

Standard Cab:
Access Cab:

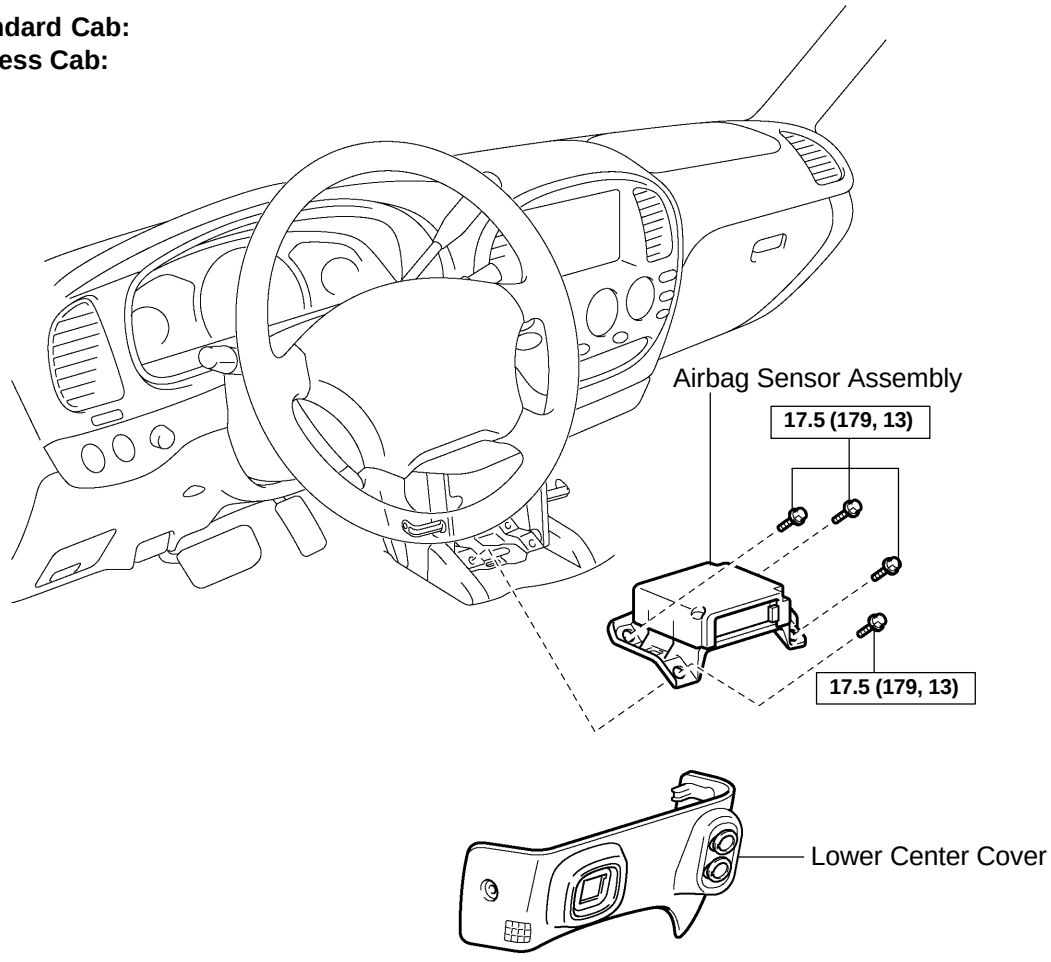

Access Cab (Large Type Console Box):

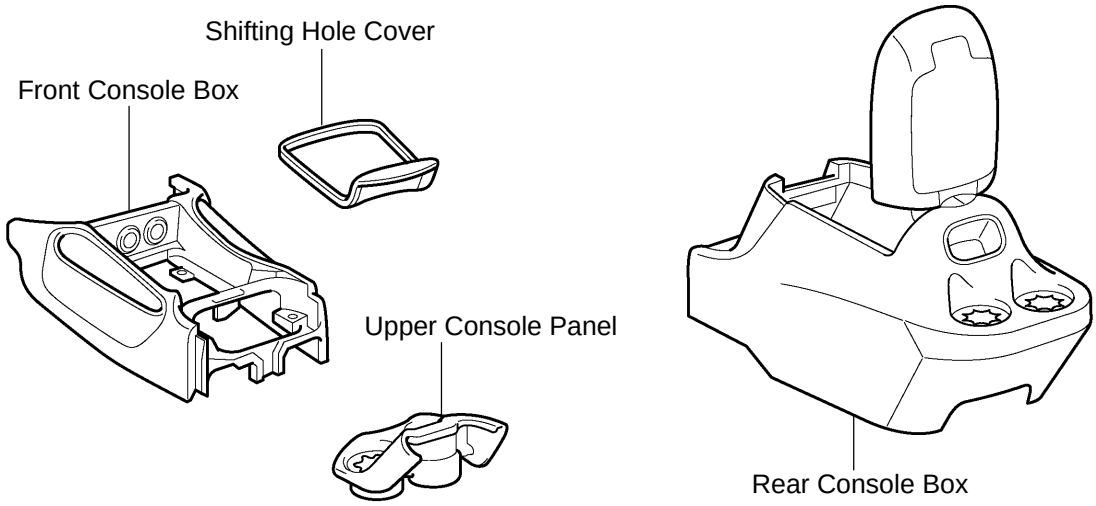

C N·m (kgf·cm, ft·lbf) : Specified torque

H23229

Double Cab:

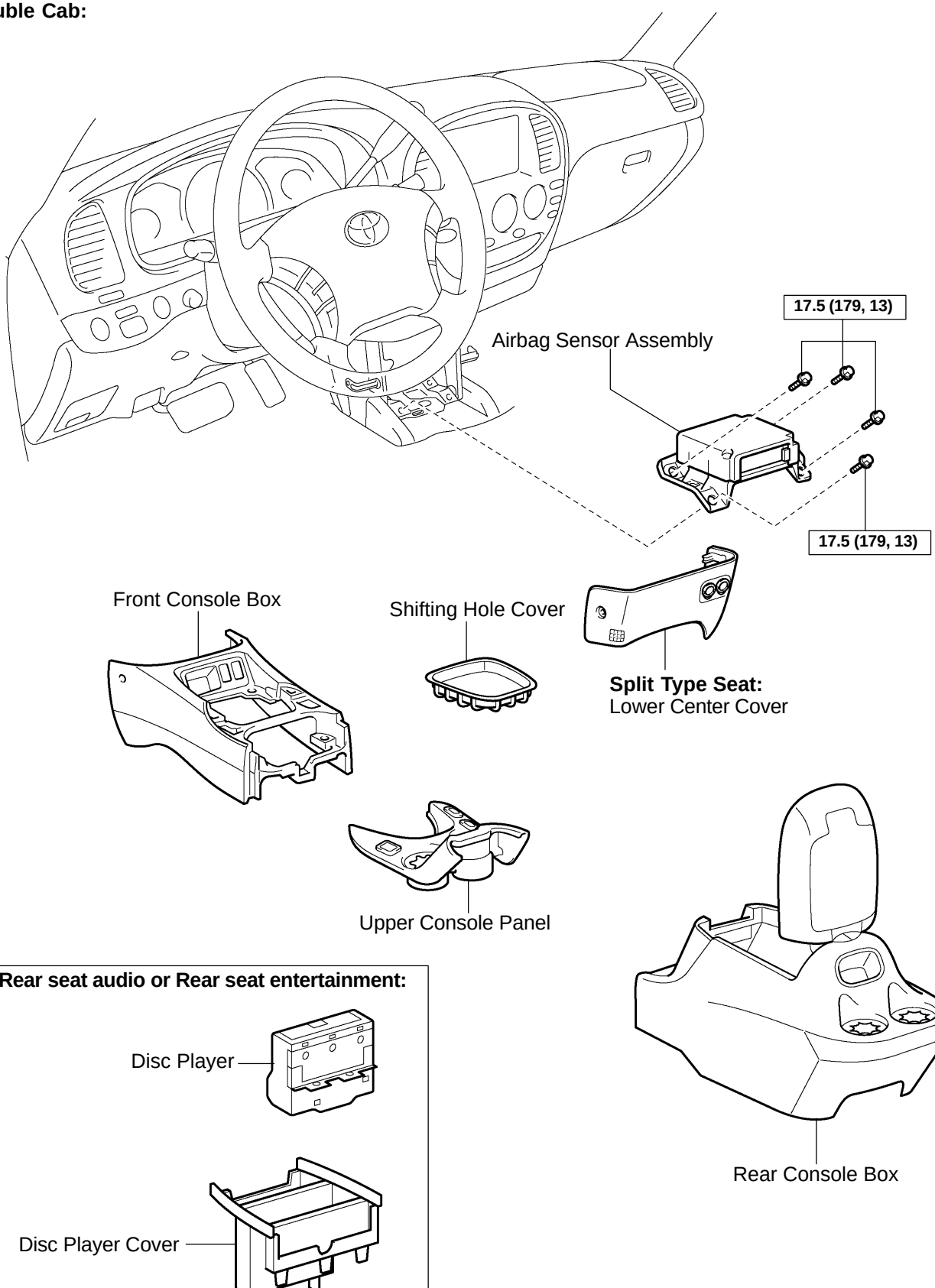

N·m (kgf·cm, ft·lbf): Specified torque

C

H23230

RS05T−06

INSPECTION

1. VEHICLE NOT INVOLVED IN A COLLISION

Perform a diagnostic system check (see page DI−1851).

2. VEHICLE INVOLVED IN A COLLISION AND AIRBAG IS NOT DEPLOYED

Perform a diagnostic system check (see page DI−1851).

3. VEHICLE INVOLVED IN A COLLISION AND AIRBAG IS DEPLOYED

Replace the airbag sensor assembly (see page DI−1851).

RS0EZ−15

INSTALLATION

NOTICE:

- **Never use SRS parts from another vehicle. When replacing parts, replace them with new ones.**
- **Never reuse the airbag sensor assembly involved in a collision when the airbag has deployed.**
- **If the airbag sensor assembly center has been dropped, or there are any cracks, dents or other defects in the case, bracket or connector, replace it with a new one.**
- **When installing the airbag sensor assembly center, be careful that the SRS wiring does not interfere with other parts and that it is not pinched between other parts.**
- **After installing, shake the airbag sensor assembly to check that there is no looseness.**

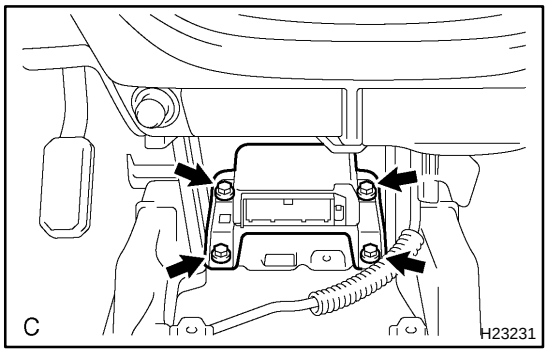

1. INSTALL AIRBAG SENSOR ASSEMBLY

(a) Install the airbag sensor assembly with the 4 bolts.
Torque: 17.5 N·m (179 kgf·cm, 13 ft·lbf)

(b) Connect the airbag sensor holder (with connectors).

**2. Access cab (w/ Large type console box):
Double cab:
INSTALL FRONT CONSOLE BOX
(SEE PAGE BO−120)**

**3. Access cab (w/ Large type console box):
Double cab:
INSTALL REAR CONSOLE BOX
(SEE PAGE BO−120)**

**4. Access cab (w/ Large type console box):
Double cab:
INSTALL UPPER CONSOLE PANEL
(SEE PAGE BO−120)**

**5. Access cab (w/ Large type console box):
Double cab:
INSTALL SHIFTING HOLE COVER
(SEE PAGE BO−120)**

**6. Standard cab:
Access cab (w/o Large type console box):
Double cab (Split type seat):
INSTALL LOWER CENTER COVER
(SEE PAGE BO−120)**

7. CONNECT CABLE TO NEGATIVE BATTERY TERMINAL

8. INSPECT SRS WARNING LIGHT (SEE PAGE DI−1839)

RS0EY−15

REMOVAL

NOTICE:

- **If the wiring connector of the SRS is disconnected with the ignition switch in the ON position, DTCs will be recorded.**
- **Never use airbag parts from another vehicle. When replacing parts, replace them with new ones.**
- **Never reuse an airbag sensor assembly if the airbag has previously deployed in a collision.**

1. PRECAUTION (SEE PAGE RS−1 AND RS−3)

2. DISCONNECT CABLE FROM NEGATIVE BATTERY TERMINAL

Wait for 90 seconds after disconnecting the cable to prevent the airbag working.

3. Standard cab:
Access cab (w/o Large type console box):
Double cab (Split type seat):
REMOVE LOWER CENTER COVER
(SEE PAGE BO−111)

4. Access cab (w/ Large type console box):
Double cab:
REMOVE SHIFTING HOLE COVER
(SEE PAGE BO−111)

5. Access cab (w/ Large type console box):
Double cab:
REMOVE UPPER CONSOLE PANEL
(SEE PAGE BO−111)

6. Access cab (w/ Large type console box):
Double cab:
REMOVE REAR CONSOLE BOX
(SEE PAGE BO−111)

7. Access cab (w/ Large type console box):
Double cab:
REMOVE FRONT CONSOLE BOX
(SEE PAGE BO−111)

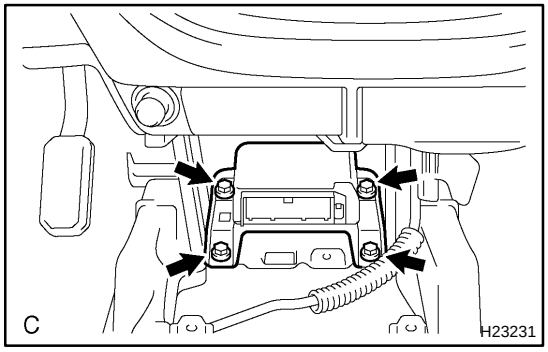

8. REMOVE AIRBAG SENSOR ASSEMBLY

(a) Disconnect the holder (with connectors) from the airbag sensor assembly.

(b) Remove the 4 bolts and airbag sensor assembly.

RS01J−19

REPLACEMENT

REPLACEMENT REQUIREMENTS

In the following cases, replace the airbag sensor assembly with a new one.

- The SRS has been deployed in a collision.
- The airbag sensor assembly has been found to be faulty in troubleshooting.
- The airbag sensor assembly has been dropped.

CAUTION:

For removal and installation of the airbag sensor assembly, see page RS−101 and RS−104. Be sure to follow the correct procedure.

CURTAIN SHIELD AIRBAG ASSEMBLY

RS0N2−17

COMPONENTS

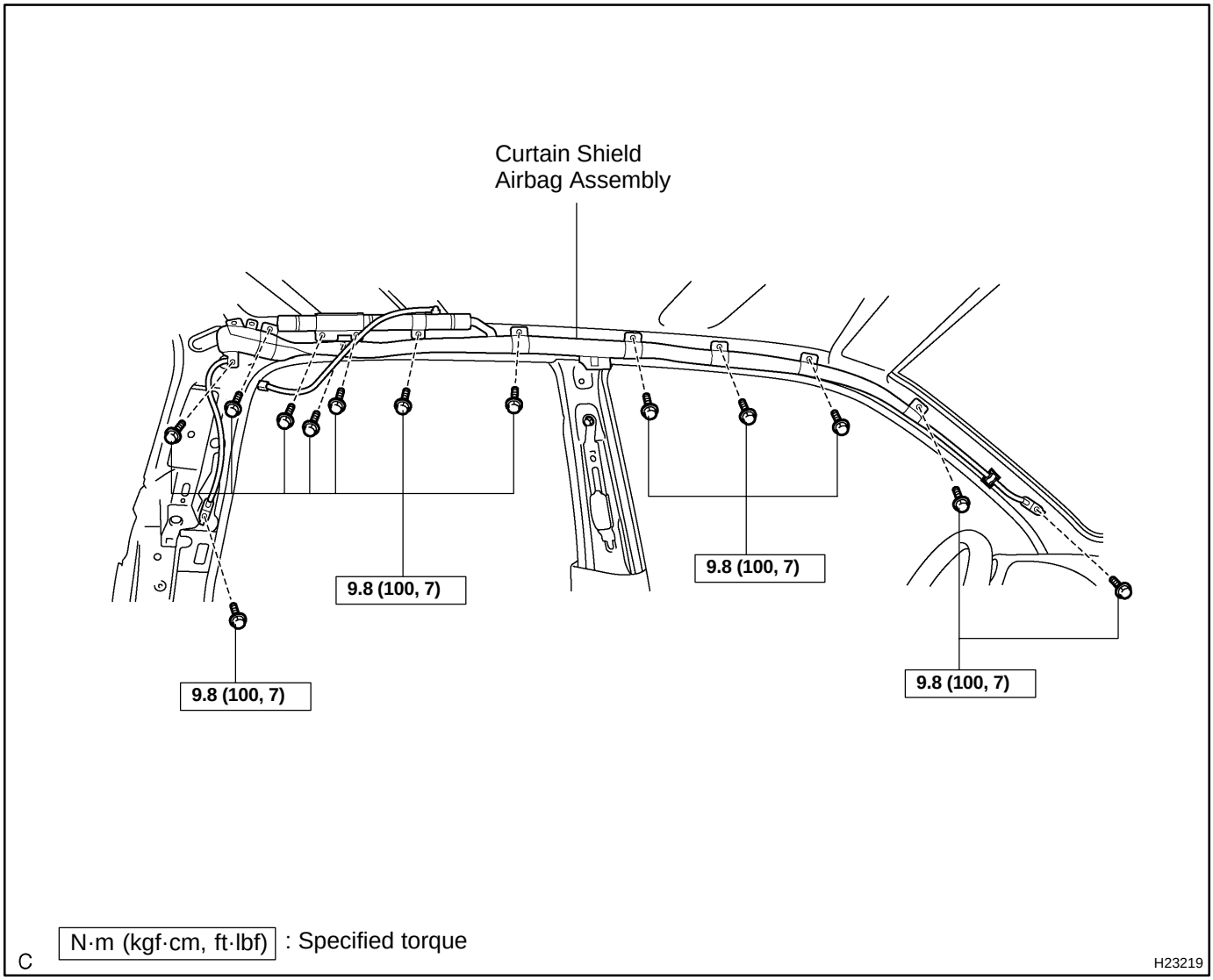

C N·m (kgf·cm, ft·lbf) : Specified torque

H23219

RS12P−01

DISPOSAL

HINT:

- Use the same procedures for the RH side and LH side.
- The procedures listed below are for the LH side.
- When scrapping a vehicle equipped with the SRS or disposing of the curtain shield airbag assembly, be sure to deploy the airbag first in accordance with the procedure described below. If any abnormality occurs with the airbag deployment, contact the TOYOTA MOTOR SALES, U.S.A., INC.

CAUTION:

- **Never dispose of a curtain shield airbag assembly which has an undeployed airbag.**
- **The airbag produces an exploding sound when it is deployed, so perform the operation outdoors and where it will not create a nuisance to nearby residents.**

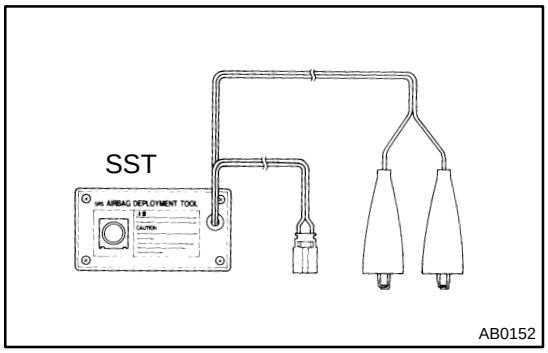

- **When deploying the airbag, always use the specified SST (SRS Airbag Deployment Tool). Perform the operation in a place away from electrical noise.**
- **When deploying the airbag, perform the operation at least 10 m (33 ft) away from the curtain shield airbag assembly.**
- **The curtain shield airbag assembly becomes extremely hot when the airbag is deployed, so do not touch it for at least 30 minutes after deployment.**
- **Use gloves and safety glasses when handling a curtain shield airbag assembly with a deployed airbag.**
- **Do not apply water, etc. to a front passenger airbag assembly with a deployed airbag.**
- **Always wash your hands with water after completing the operation.**

HINT:

Prepare a battery as the power source to deploy the airbag.

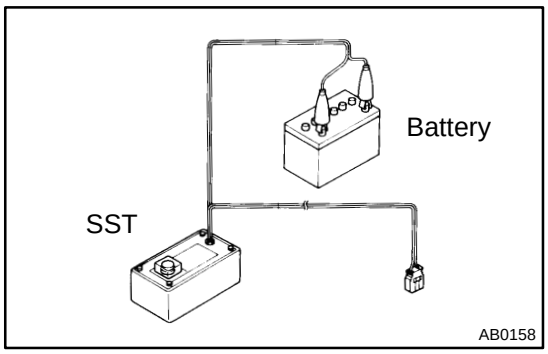

1. AIRBAG DEPLOYMENT WHEN SCRAPPING VEHICLE

(a) Check the function of the SST (see step 1−(a) on page RS−25).
SST 09082−00700

(b) Precaution (see page RS−1 and RS−3).

(c) Disconnect the cable from the negative battery terminal. Wait for 90 seconds after disconnecting the cable to prevent the airbag working.

(d) Remove the roof headlining (see page BO−126 and BO−133).

(e) Disconnect the curtain shield airbag connector.

NOTICE:

When handling the airbag connector, be careful not to damage the airbag wire harness.

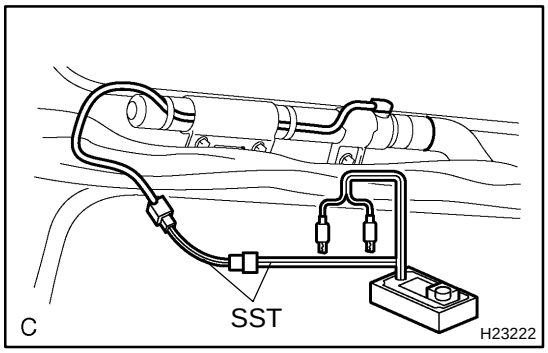

(f) Install the SST.

(1) Connect the connectors of the SST to the curtain shield airbag assembly.
SST 09082−00700, 09082−00760

NOTICE:

To avoid damaging the SST connector and wire harness, do not lock the secondary lock of the twin lock.

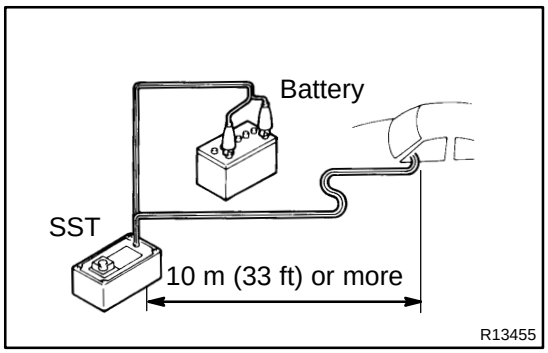

(2) Move the SST at least 10 m (33 ft) away from the vehicle rear side window.

(3) Maintaining enough clearance for the SST wire harness in the rear side window, close all doors and windows of the vehicle.

NOTICE:

Take care not to damage the SST wire harness.

(4) Connect the red clip of the SST to the battery positive (+) terminal and the black clip of the SST to the negative (−) terminal.

(g) Deploy the airbag.
(1) Check that no one is inside the vehicle or within a 10 m (33 ft) radius of the vehicle.
(2) Press the SST activation switch and deploy the airbag.

CAUTION:
- **When deploying the airbag, make sure that no one is near the vehicle.**
- **The curtain shield airbag assembly becomes extremely hot when the airbag is deployed, so do not touch it for at least 30 minutes after deployment.**
- **Use gloves and safety glasses when handling a curtain shield airbag assembly with a deployed airbag.**
- **Do not apply water, etc. to a curtain shield airbag assembly with a deployed airbag.**
- **Always wash your hands with water after completing the operation.**

HINT:
The airbag deploys as the LED of the SST activation switch comes on.

2. DEPLOYMENT WHEN DISPOSING OF CURTAIN SHIELD AIRBAG ASSEMBLY

NOTICE:
- **When disposing of the curtain shield airbag assembly, never use the customer's vehicle to deploy the airbag.**
- **Be sure to follow the procedure given below when deploying the airbag.**

HINT:
Prepare a battery as the power source to deploy the airbag.

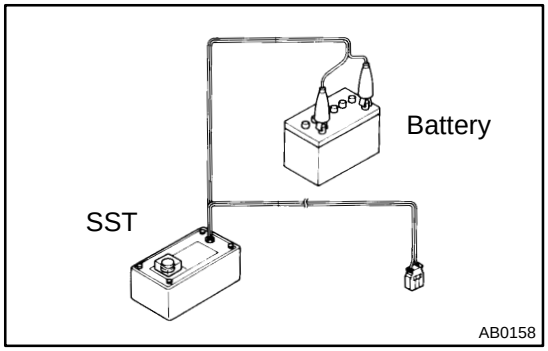

(a) Check the function of the SST (see step 1−(a) on page RS−25).
(b) Remove the curtain shield airbag assembly (see page RS−84).

- **When removing the front passenger airbag assembly, work must be started 90 seconds after the ignition switch is turned to the "LOCK" position and the negative (−) terminal cable is disconnected from the battery.**
- **When storing the front passenger airbag assembly, keep the airbag deployment side facing upward.**

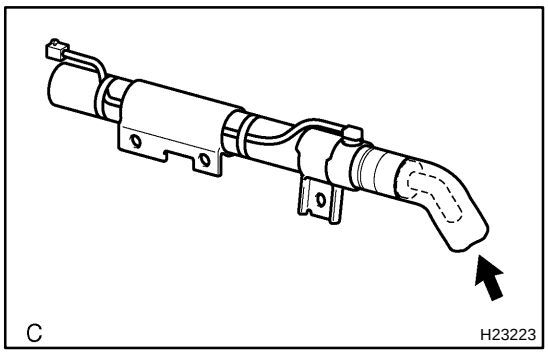

(c) Cut off the deployment section of the curtain shield airbag assembly.

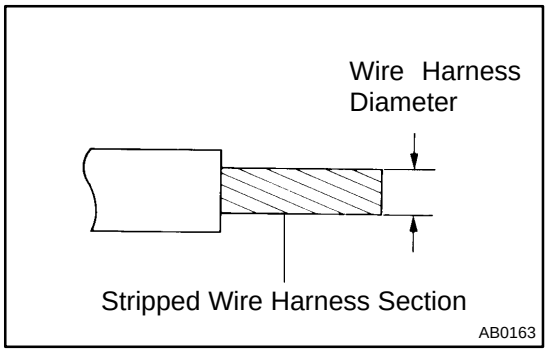

(d) Using a service−purpose wire harness for the vehicle, tie down the front passenger airbag assembly to the tire.

Wire harness: Stripped wire harness section 1.25 mm^2 or more (0.0019 in^2. or more)

CAUTION:

If the wire harness is too thin or an alternative object is used to tie down the curtain shield airbag assembly, it may be snapped by the shock when the airbag is deployed. Always use a wire harness for vehicle use with an area of at least 1.25 mm^2 (0.0019 in^2.).

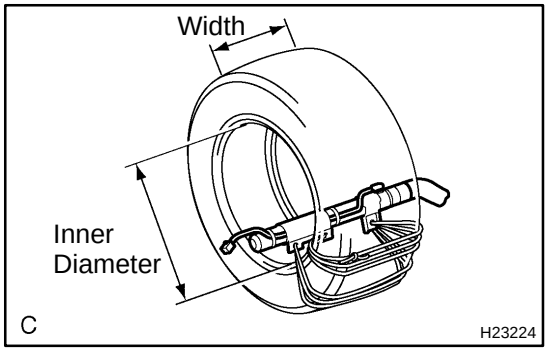

HINT:

To calculate the area of the stripped wire harness section:

Area = 3.14 x (Diameter)^2 divided by 4

(1) Position the curtain shield airbag assembly inside the tire with the airbag deployment side facing inside.

Tire size: Must exceed the following dimensions:

Width: 185 mm (7.28 in.)

Inner diameter: 360 mm (14.17 in.)

CAUTION:

- **Make sure that the wire harness is tight. If there is slack in wire harness, the curtain shield airbag assembly may become loose due to the shock when the airbag is deployed.**
- **Always tie down the curtain shield airbag assembly with the airbag deployment side facing inside.**

NOTICE:

The tire will be marked by the airbag deployment, so use an extra tire.

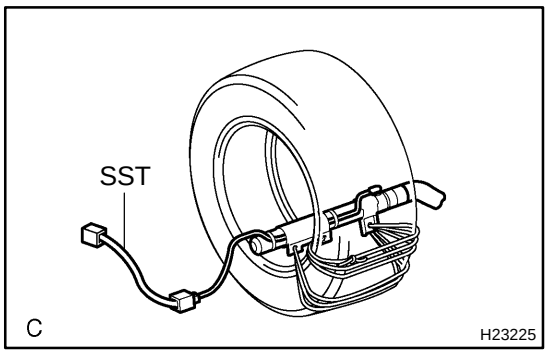

(e) Install the SST.
After connecting the SST below to each other, connect them to the curtain shield airbag assembly.
SST 09082−00802, 09082−00760

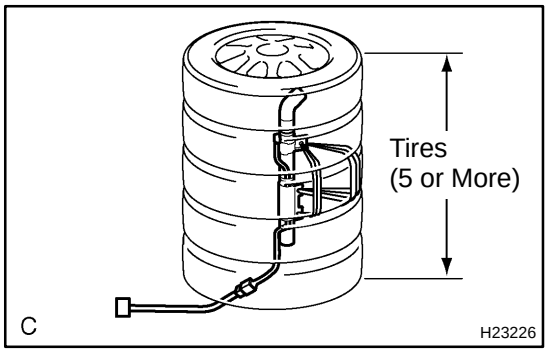

(f) Place the tires.
(1) Place at least 2 tires under the tire which the curtain shield airbag assembly is tied to.
(2) Place at least 2 tires over the tire which the curtain shield airbag assembly is tied to. The top tire should have the disc wheel installed.

NOTICE:
Do not place the SST connector under the tire because it could be damaged.

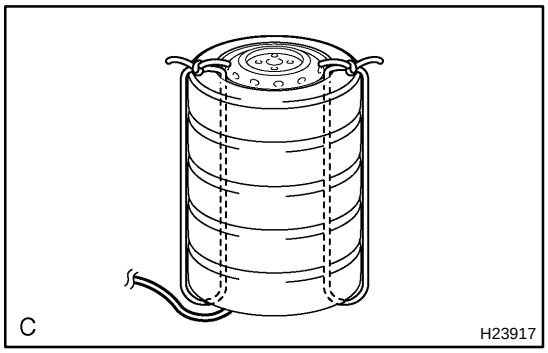

(3) Tie the tires together with 2 wire harness.

CAUTION:
Make sure that the wire harness is tight. Looseness in the wire harness results in the tires coming free due to the shock when the airbag is deployed.

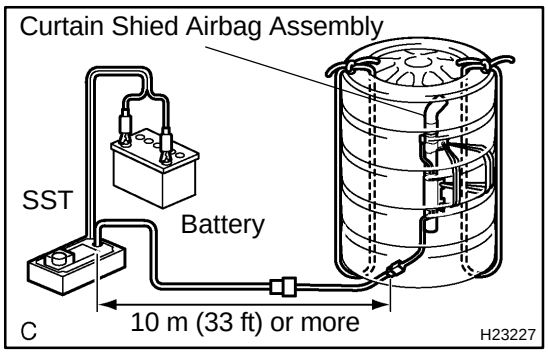

(g) Install the SST.
Connect the SST connector.
SST 09082−00700

NOTICE:
To avoid damaging the SST connector and wire harness, do not lock the secondary lock of the twin lock. Also, secure some slack for the SST wire harness inside the tire.

(h) Deploy the airbag.
(1) Connect the red clip of the SST to the battery positive (+) terminal and the black clip of the SST to the battery negative (−) terminal.
(2) Check that no one is within a 10 m (33 ft) radius of the tire which the shield airbag assembly is tied to.

(3) Press the SST activation switch and deploy the airbag.

CAUTION:

When deploying the airbag, make sure that no one is near the tire.

HINT:

The airbag deploys as the LED of the SST activation switch comes on.

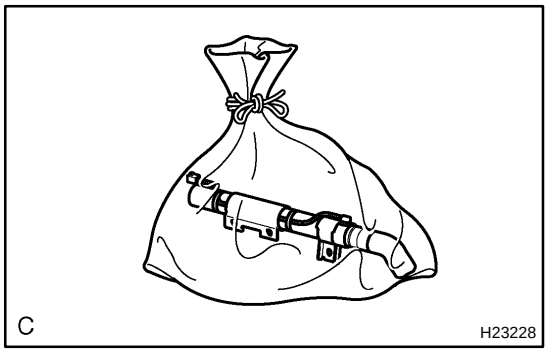

(i) Dispose of the curtain shield airbag assembly.

CAUTION:

- **The curtain shield airbag assembly becomes extremely hot when the airbag is deployed, so do not touch it for at least 30 minutes after deployment.**
- **Use gloves and safety glasses when handling a curtain shield airbag assembly with a deployed airbag.**
- **Do not apply water, etc. to a curtain shield airbag assembly with a deployed airbag.**
- **Always wash your hands with water after completing the operation.**

(1) Remove the curtain shield airbag assembly from the tire.

(2) Place the curtain shield airbag assembly in a plastic bag, tie it tightly and dispose of it as other general part disposal.

RS12O−01

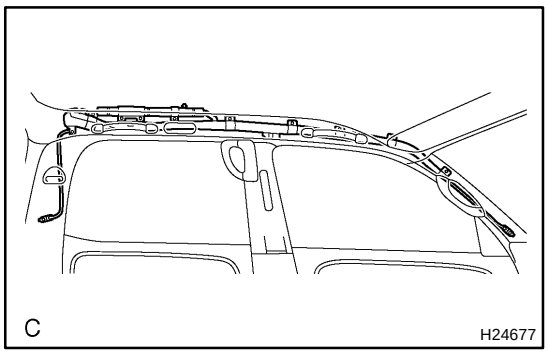

INSPECTION

1. VEHICLES NOT INVOLVED IN A COLLISION

(a) Perform a diagnostic system check (see page DI−1851).

(b) With the curtain shield airbag assembly installed on the vehicle, perform a visual check. If there are any defects as mentioned below, replace the front pillar garnish or roof headlining assy with a new one:

Cuts, minute cracks or marked discoloration on the front pillar garnish or roof headlining assy around the curtain shield airbag assembly.

2. VEHICLE INVOLVED IN A COLLISION AND AIRBAG IS NOT DEPLOYED

(a) Perform a diagnostic system check (see page DI−1851).

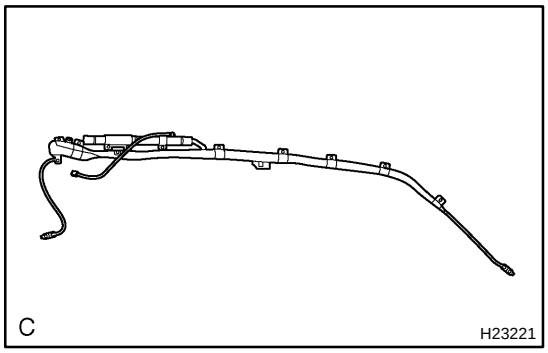

(b) With the curtain shield airbag assembly removed from the vehicle, perform a visual check. If there are any defects as mentioned below, replace the curtain shield airbag assembly with a new one:

- Cuts, tears and cracks, or marked discoloration on the curtain shield airbag assembly.
- Cracks or other damage to the connector.

CAUTION:

For removal and installation of the curtain shield airbag assembly, see page RS−111 and RS−114. Be sure to follow the correct procedure.

RS0TH−08

INSTALLATION

HINT:

- Use the same procedures for the RH side and LH side.
- The procedures listed below are for the LH side.

1. INSTALL CURTAIN SHIELD AIRBAG ASSEMBLY

(a) Install the curtain shield airbag assembly with the 13 bolts.

Torque: 9.8 N·m (100 kgf·cm, 7 ft·lbf)

CAUTION:

Pay attention not to twist the deployment section of the curtain shield airbag assembly.

NOTICE:

- **If the curtain shield airbag assembly has been dropped, or there are cracks, dents or other defects in the case or connector, replace the curtain shield airbag assembly with a new one.**
- **When installing the curtain shield airbag assembly, take care that it is not pinched between other parts.**
- **Never use airbag parts from another vehicle. When replacing parts, replace them with new ones.**

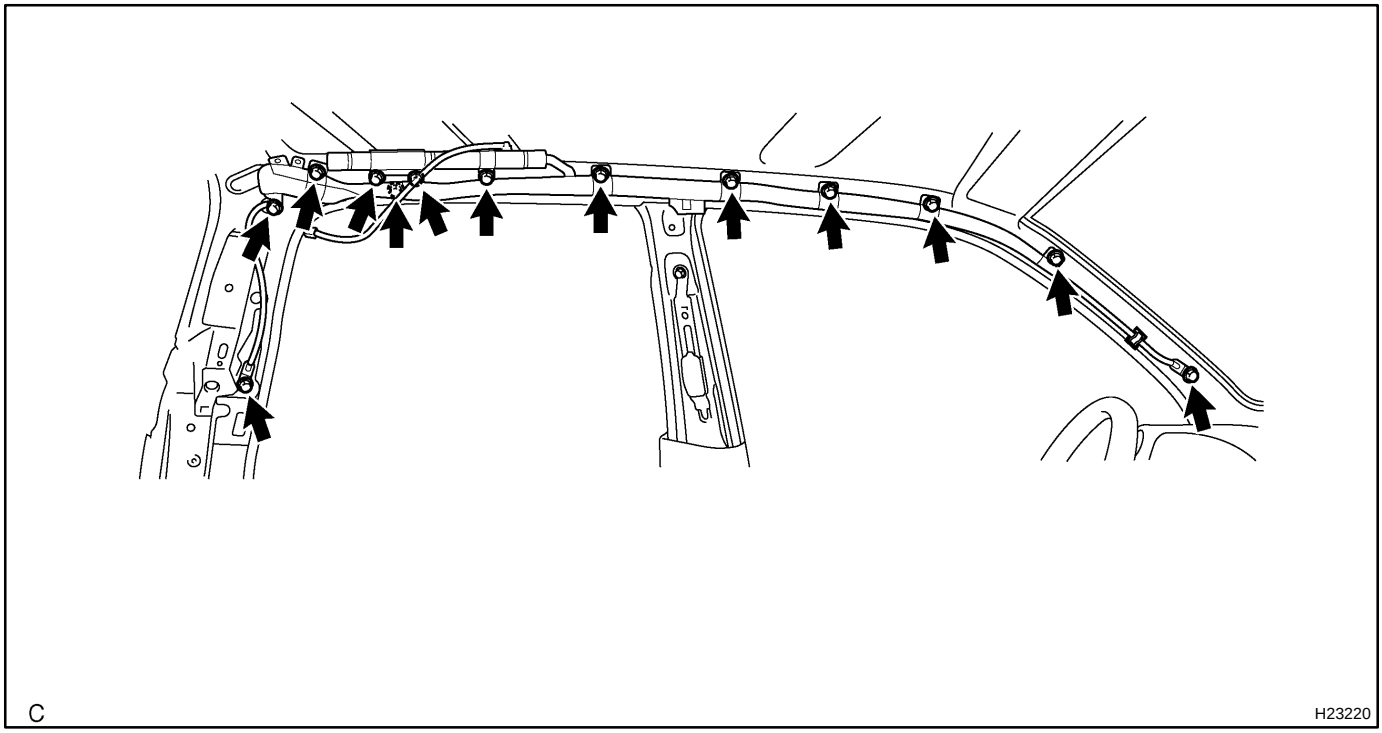

(b) Connect the connector of the curtain shield airbag assembly.

2. INSTALL ROOF HEADLINING (SEE PAGE BO−130 AND BO−138)

3. CONNECT CABLE TO NEGATIVE BATTERY TERMINAL

4. INSPECT SRS WARNING LIGHT (SEE PAGE DI−1839)

RS10V−02

REMOVAL

HINT:

- Use the same procedures for the RH side and LH side.
- The procedures listed below are for the LH side.

NOTICE:

- **If the wiring connector of the SRS is disconnected and the ignition switch is in the ACC or ON position, DTCs will be recorded.**
- **Never use airbag parts from another vehicle. When replacing parts, replace them with new ones.**

1. PRECAUTION (SEE PAGE RS−1 AND RS−3)

2. DISCONNECT CABLE FROM NEGATIVE BATTERY TERMINAL

Wait for 90 seconds after disconnecting the cable to prevent the airbag working.

3. REMOVE ROOF HEADLINING (SEE PAGE BO−126 AND BO−133)

4. REMOVE CURTAIN SHIELD AIRBAG ASSEMBLY

(a) Disconnect the curtain shield airbag connector.

NOTICE:

When handling the airbag connector, take care not to damage the airbag wire harness.

(b) Remove the 13 bolts and the curtain shield airbag assembly.

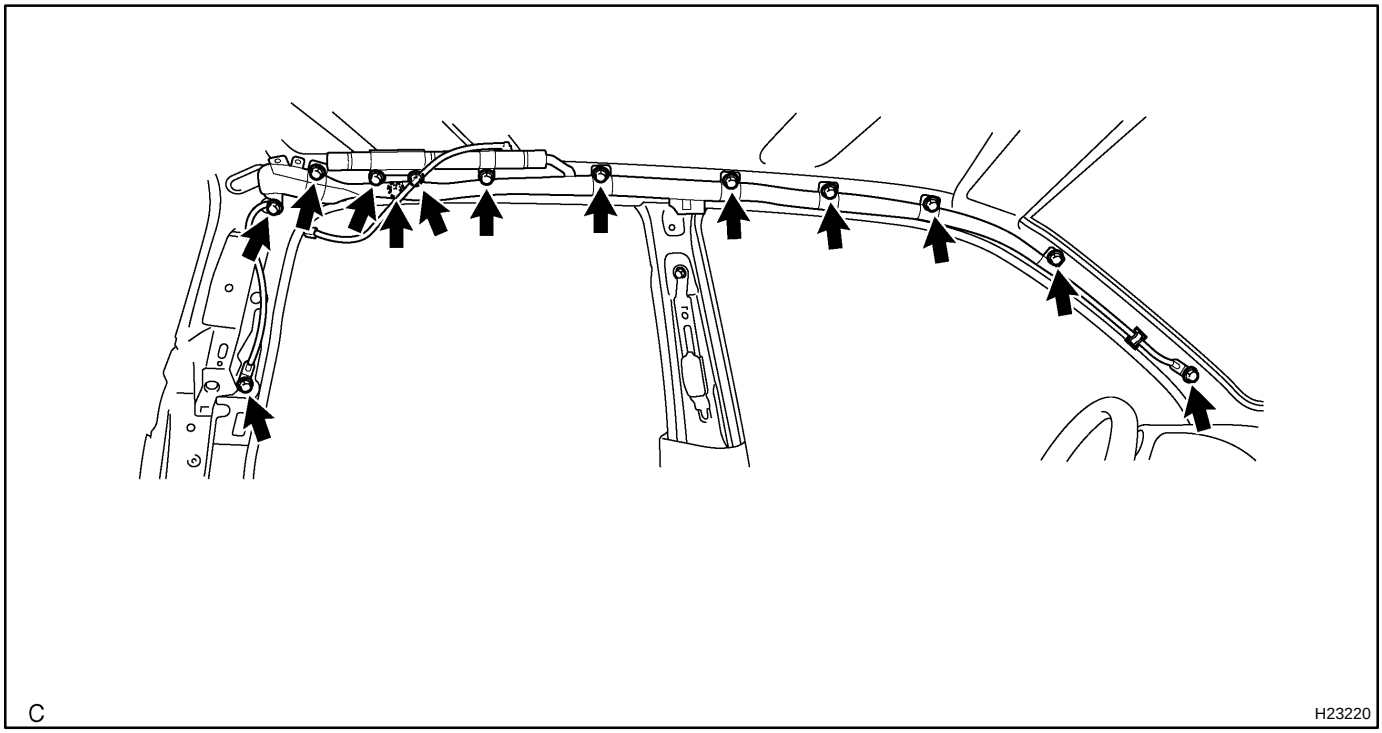

C H23220

RS0N6−11

REPLACEMENT

REPLACEMENT REQUIREMENTS

In the following cases, replace the curtain shield airbag assembly or curtain shield airbag cover with a new one.

Case	Replacing part
The curtain shield airbag has been deployed.	Curtain shield airbag assembly
The curtain shield airbag assembly has been found to be faulty in trouble-shooting.	Curtain shield airbag assembly
The curtain shield airbag assembly has been found to be faulty while checking items (see page RS−85).	Curtain shield airbag assembly
The front pillar garnish has been found to be faulty while checking items (see page RS−85).	Front pillar garnish
The roof headlining has been found to be faulty while checking items (see page RS−85).	Roof headlining
The curtain shield airbag assembly has been dropped.	Curtain shield airbag assembly

CAUTION:

For removal and installation of the curtain shield airbag assembly, see page RS−111 and RS−114. Be sure to follow the correct procedure.

CURTAIN SHIELD AIRBAG SENSOR ASSEMBLY

RS0SH−08

COMPONENTS

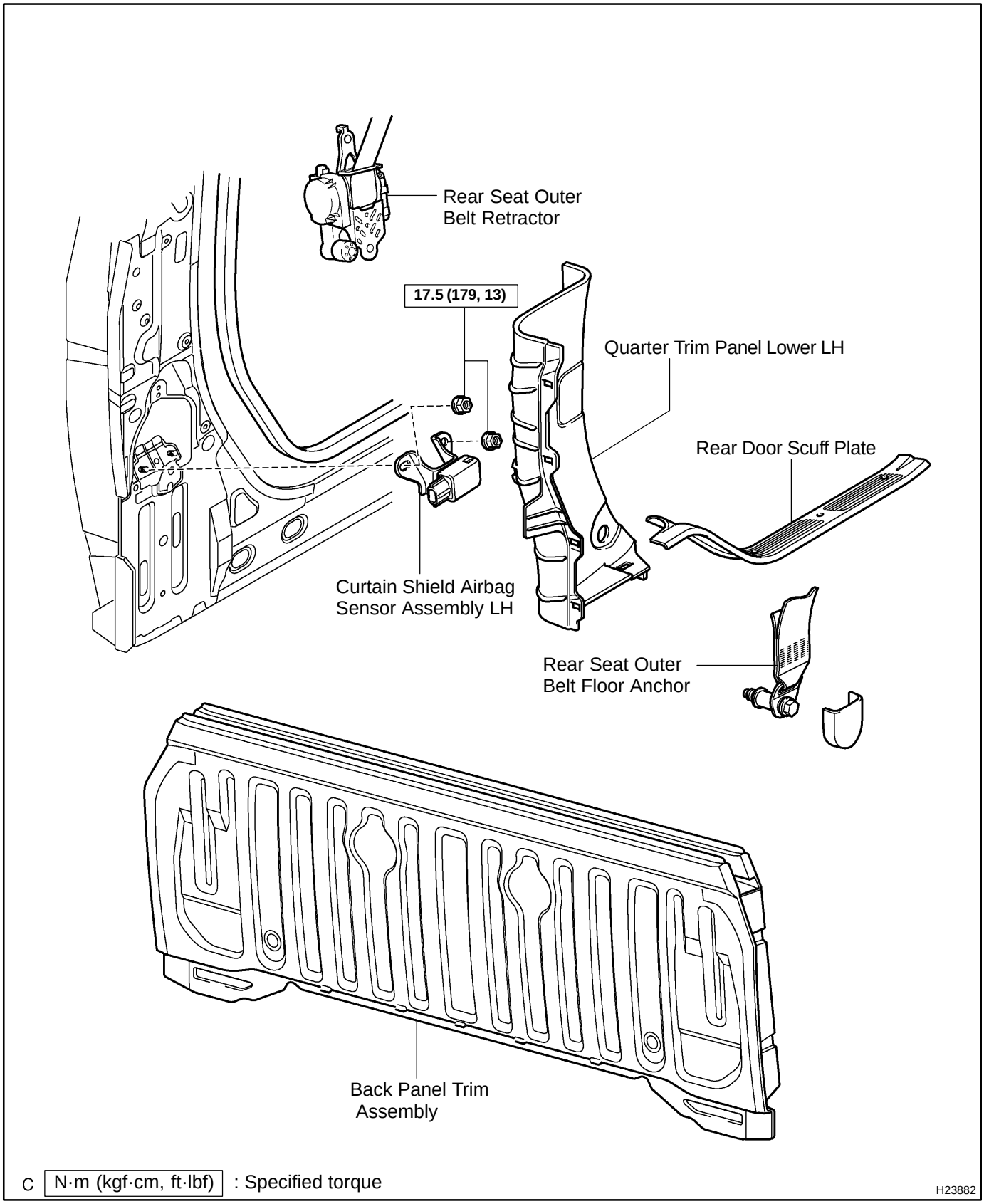

RS0SJ−07

INSPECTION

1. VEHICLE NOT INVOLVED IN A COLLISION

Perform a diagnostic system check (see page DI−1851).

2. VEHICLE INVOLVED IN A COLLISION AND AIRBAG IS NOT DEPLOYED

Perform a diagnostic system check (see page DI−1851).

3. VEHICLE INVOLVED IN A COLLISION AND AIRBAG IS DEPLOYED

Replace the curtain shield airbag sensor assembly (see page DI−1851).

RS0SL−08

INSTALLATION

HINT:

- Use the same procedures for the RH side and LH side.
- The procedures listed below are for the LH side.

NOTICE:

- **Never use SRS parts from another vehicle. When replacing parts, replace them with new ones.**
- **Never reuse the curtain shield airbag sensor assembly involved in a collision when the airbag has deployed.**
- **If the curtain shield airbag sensor assembly center has been dropped, or there are any cracks, dents or other defects in the case, bracket or connector, replace it with a new one.**
- **When installing the curtain shield airbag sensor assembly center, be careful that the SRS wiring does not interfere with other parts and that it is not pinched between other parts.**
- **After installing, shake the curtain shield airbag sensor assembly to check that there is no looseness.**

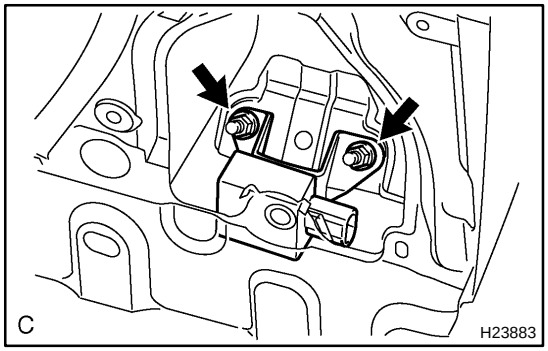

1. INSTALL CURTAIN SHIELD AIRBAG SENSOR ASSEMBLY LH

(a) Install the curtain shield airbag sensor assembly LH with the 2 nuts.

Torque: 17.5 N·m (179 kgf·cm, 13 ft·lbf)

(b) Connect the curtain shield airbag sensor assembly LH connector.

2. INSTALL REAR SEAT OUTER BELT RETRACTOR (SEE PAGE BO−252)

3. INSTALL QUARTER TRIM PANEL LOWER LH (SEE PAGE BO−138)

4. INSTALL REAR SEAT OUTER BELT FLOOR ANCHOR (SEE PAGE BO−138)

5. INSTALL BACK PANEL TRIM ASSEMBLY (SEE PAGE BO−138)

6. INSTALL REAR DOOR SCUFF PLATE (SEE PAGE BO−138)

7. CONNECT CABLE TO NEGATIVE BATTERY TERMINAL

8. INSPECT SRS WARNING LIGHT (SEE PAGE DI−1839)

RS0SI−08

REMOVAL

HINT:

- Use the same procedures for the RH side and LH side.
- The procedures listed below are for the LH side.

NOTICE:

- **If the wiring connector of the SRS is disconnected with the ignition switch in the ON position, DTCs will be recorded.**
- **Never use airbag parts from another vehicle. When replacing parts, replace them with new ones.**
- **Never reuse a curtain shield airbag sensor assembly if the airbag has previously deployed in a collision.**

1. PRECAUTION (SEE PAGE RS−1 AND RS−3)

2. DISCONNECT CABLE FROM NEGATIVE BATTERY TERMINAL

Wait for 90 seconds after disconnecting the cable to prevent the airbag working.

3. REMOVE REAR DOOR SCUFF PLATE (SEE PAGE BO−133)

4. REMOVE BACK PANEL TRIM ASSEMBLY (SEE PAGE BO−133)

5. REMOVE REAR SEAT OUTER BELT FLOOR ANCHOR (SEE PAGE BO−133)

6. REMOVE QUARTER TRIM PANEL LOWER LH (SEE PAGE BO−133)

7. REMOVE REAR SEAT OUTER BELT RETRACTOR (SEE PAGE BO−236)

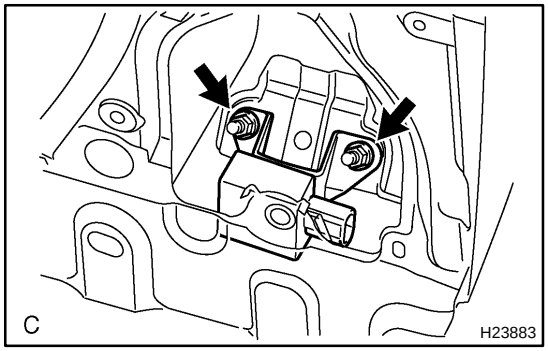

8. REMOVE CURTAIN SHIELD AIRBAG SENSOR ASSEMBLY LH

(a) Disconnect the curtain shield airbag sensor assembly LH connector.

NOTICE:

Disconnect the connector with the sensor assembly installed.

(b) Remove the 2 nuts and curtain shield airbag sensor assembly LH.

RS0SK−06

REPLACEMENT

REPLACEMENT REQUIREMENTS

In the following cases, replace the curtain shield airbag sensor assembly with a new one.

- The curtain shield airbag assembly has been deployed in a collision.
- The curtain shield airbag sensor assembly has been found to be faulty in troubleshooting.
- The curtain shield airbag sensor assembly has been dropped.

CAUTION:

For removal and installation procedures of the curtain shield airbag sensor assembly, see page RS−118 and RS−122. Be sure to follow the correct procedure.

FRONT AIRBAG SENSOR

COMPONENTS

RS01L−39

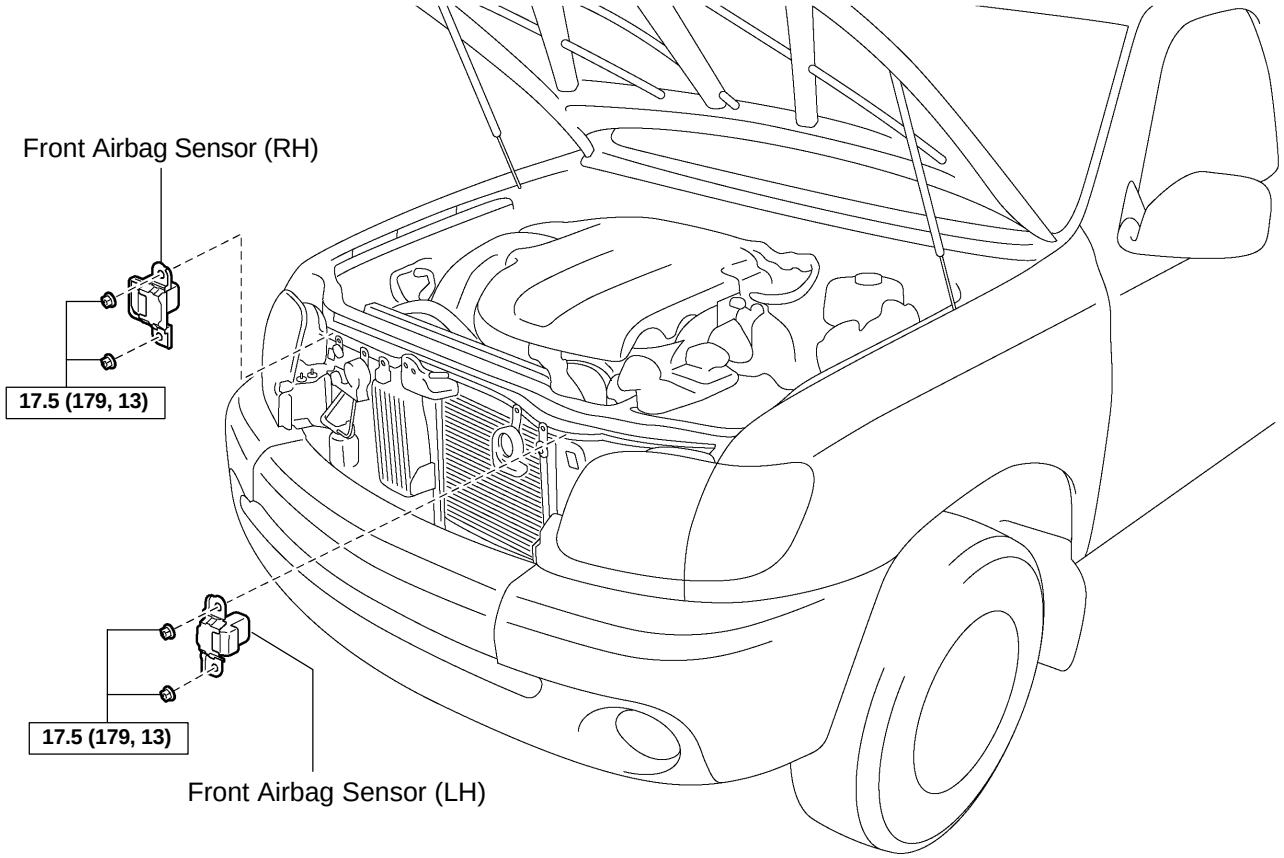

C N·m (kgf·cm, ft·lbf): Specified torque

H23878

RS12Q−01

INSPECTION

1. VEHICLE NOT INVOLVED IN A COLLISION

Perform a diagnostic system check (see page DI−1851).

2. VEHICLE INVOLVED IN A COLLISION AND AIRBAG IS NOT DEPLOYED

Perform a diagnostic system check (see page DI−1851).

3. VEHICLE INVOLVED IN A COLLISION AND AIRBAG IS DEPLOYED

Replace the front airbag sensor RH and LH (see page DI−1851).

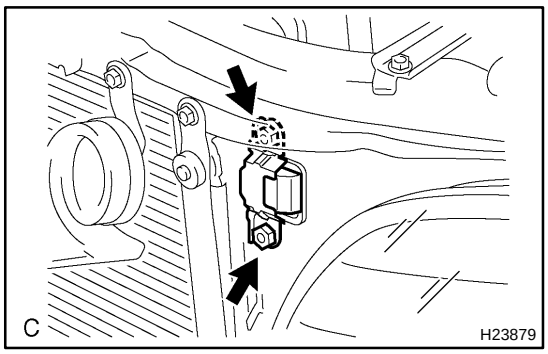

RS12R−01

INSTALLATION

HINT:

- Use the same procedures for the RH side and LH side.
- The procedures listed below are for the LH side.

NOTICE:

- **Never use SRS parts from another vehicle. When replacing parts, replace them with new ones.**
- **Never reuse the front airbag sensor involved in a collision when the airbag has deployed.**
- **If the front airbag sensor center has been dropped, or there are any cracks, dents or other defects in the case, bracket or connector, replace it with a new one.**
- **When installing the front airbag sensor center, be careful that the SRS wiring does not interfere with other parts and that it is not pinched between other parts.**
- **After installing, shake the front airbag sensor to check that there is no looseness.**

1. INSTALL FRONT AIRBAG SENSOR LH

(a) Install the front airbag sensor LH with the 2 nuts.

Torque: 17.5 N·m (179 kgf·cm, 13 ft·lbf)

(b) Connect the front airbag sensor connector.

2. CONNECT CABLE TO NEGATIVE BATTERY TERMINAL

3. INSPECT SRS WARNING LIGHT (SEE PAGE DI−1839)

RS0I2−04

REMOVAL

HINT:

- Use the same procedures for the RH side and LH side.
- The procedures listed below are for the LH side.

NOTICE:

- **If the wiring connector of the SRS is disconnected with the ignition switch in the ON position, DTCs will be recorded.**
- **Never use airbag parts from another vehicle. When replacing parts, replace them with new ones.**
- **Never reuse a front airbag sensor if the airbag has previously deployed in a collision.**

1. PRECAUTION (SEE PAGE RS−1 AND RS−3)

2. DISCONNECT CABLE FROM NEGATIVE BATTERY TERMINAL

Wait for 90 seconds after disconnecting the cable to prevent the airbag working.

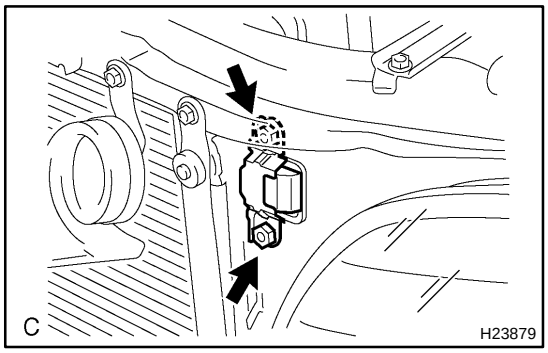

3. REMOVE FRONT AIRBAG SENSOR LH

(a) Disconnect the front airbag sensor LH connector.

NOTICE:

Disconnect the connector with the sensor assembly installed.

(b) Remove the 2 nuts and front airbag sensor LH.

RS01O−28

REPLACEMENT

REPLACEMENT REQUIREMENTS

In the following cases, replace the front airbag sensor with a new one.

- The SRS has been deployed in a collision. (Replace both the left and right airbag sensors.)
- The front airbag sensor has been found to be faulty in troubleshooting.
- The front airbag sensor has been found to be faulty while checking items (see page RS−102).
- The front airbag sensor has been dropped.

CAUTION:

For removal and installation of the front airbag sensor, see page RS−101 and RS−104. Be sure to follow the correct procedure.

FRONT PASSENGER AIRBAG ASSEMBLY

RS10J−02

COMPONENTS

Standard Cab:
Access Cab:

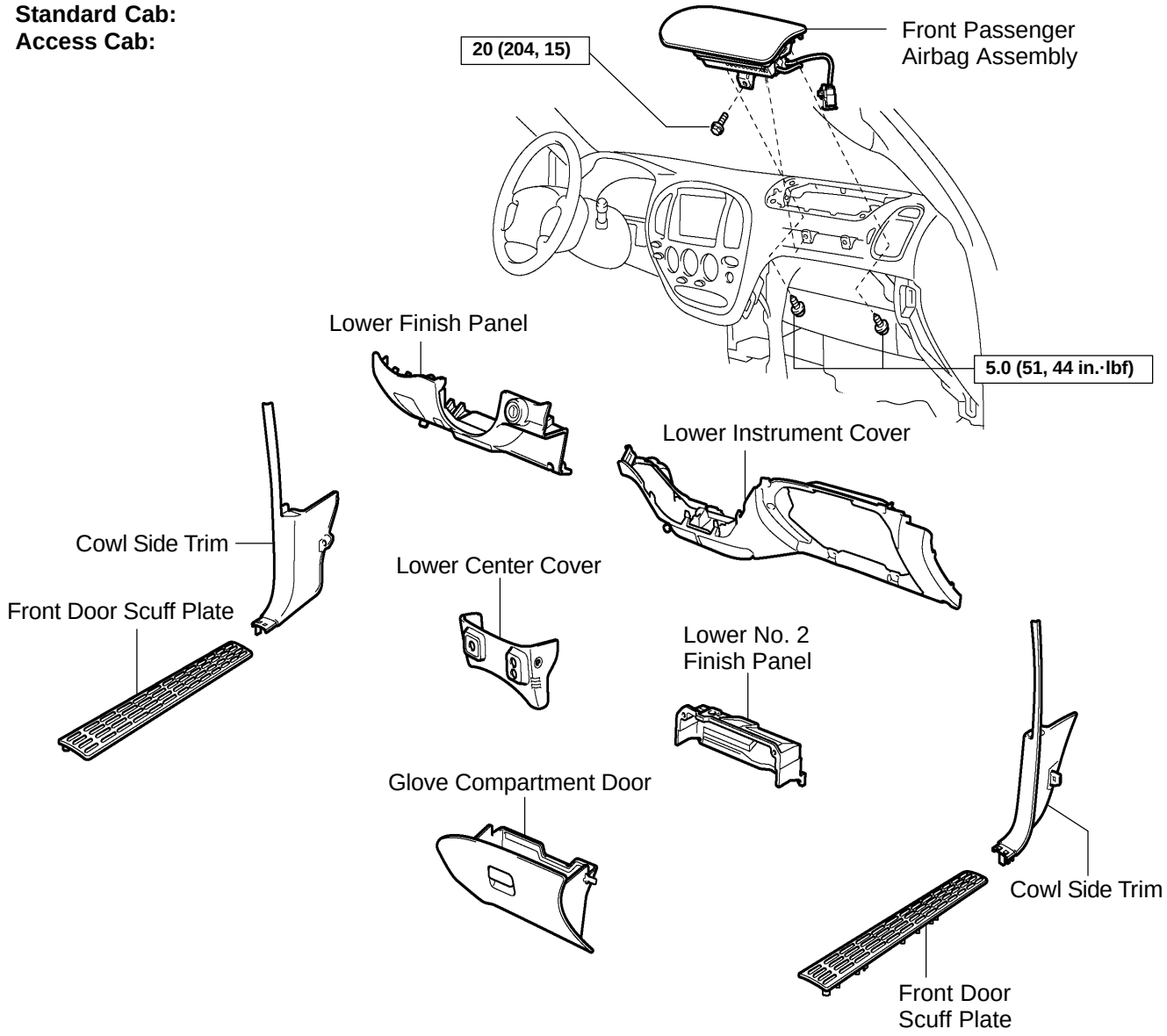

Access Cab (Large Type Console Box):

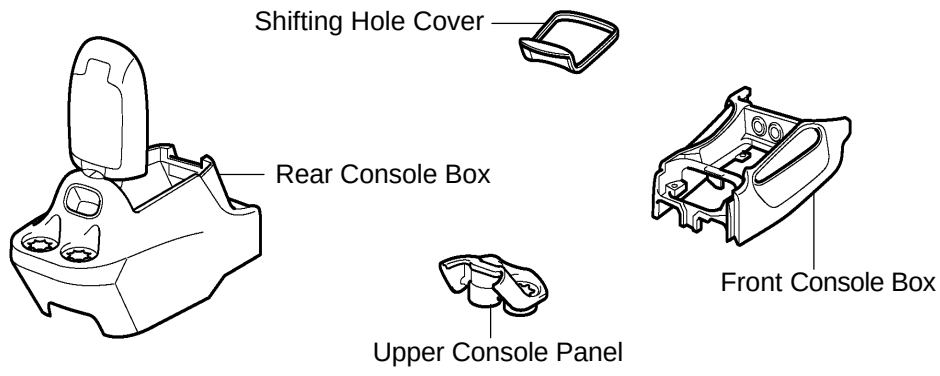

C N·m (kgf·cm, ft·lbf) : Specified torque

H23209

Double Cab:

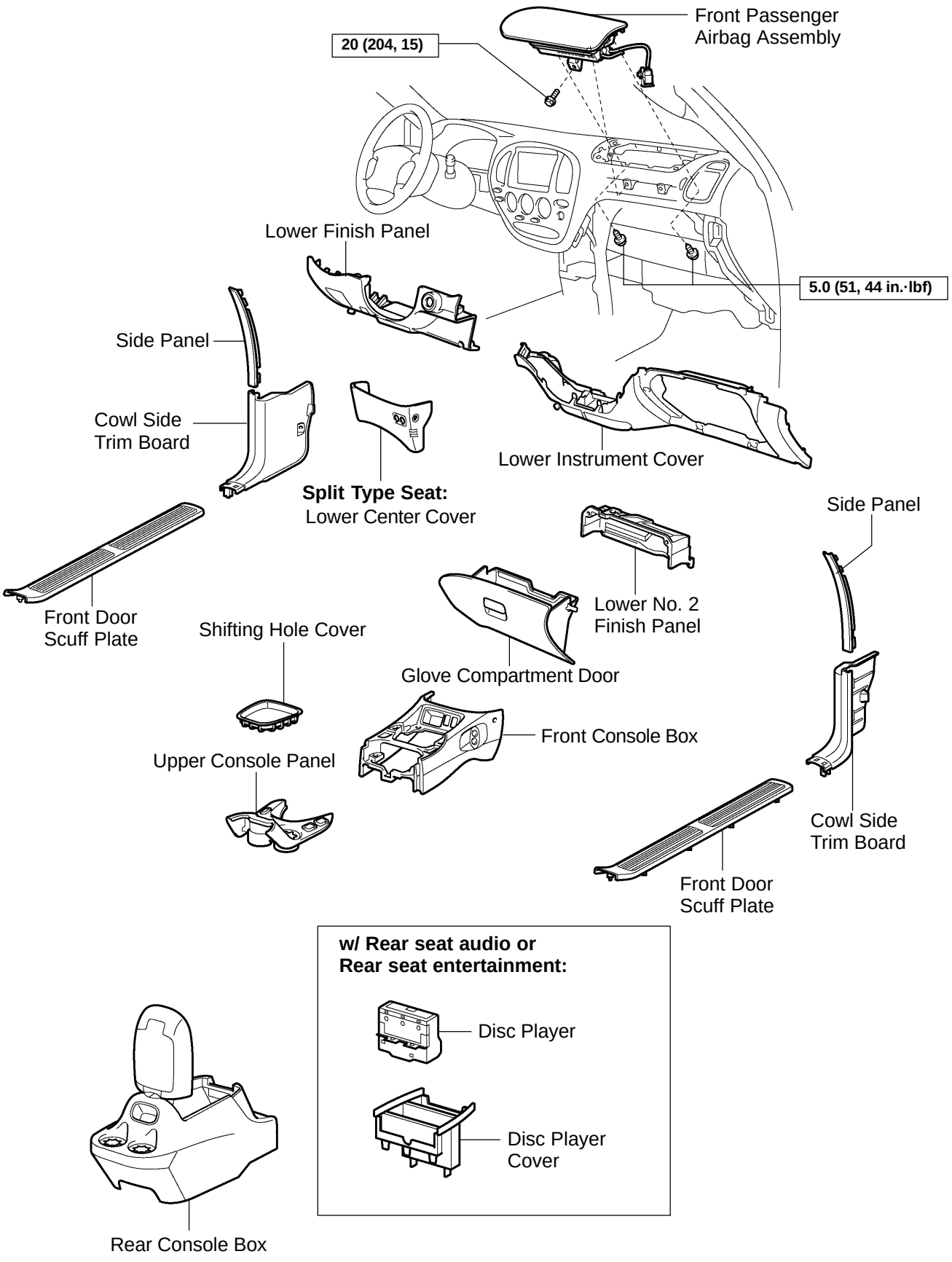

C N·m (kgf·cm, ft·lbf) : Specified torque

H23210

RS125−01

DISPOSAL

HINT:

When scrapping a vehicle equipped with the SRS or disposing of the front passenger airbag assembly, be sure to deploy the airbag first in accordance with the procedure described below. If any abnormality occurs with the airbag deployment, contact the SERVICE DEPT. of the TOYOTA MOTOR SALES, U.S.A., INC.

CAUTION:

- **Never dispose of a front passenger airbag assembly that has an undeployed airbag.**
- **The airbag produces an exploding sound when it is deployed, so perform the operation outdoors and where it will not create a nuisance to nearby residents.**

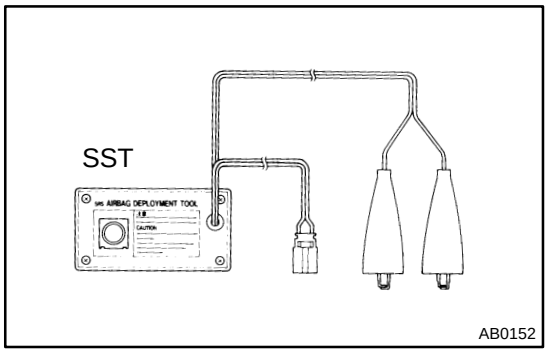

- **When deploying the airbag, always use the specified SST (SRS Airbag Deployment Tool). Perform the operation in a place away from electrical noise.**
- **When deploying the airbag, perform the operation at least 10 m (33 ft) away from the front passenger airbag assembly.**
- **The front passenger airbag assembly becomes extremely hot when the airbag is deployed, so do not touch it for at least 30 minutes after deployment.**
- **Use gloves and safety glasses when handling a front passenger airbag assembly with a deployed airbag.**
- **Do not apply water, etc. to a front passenger airbag assembly with a deployed airbag.**
- **Always wash your hands with water after completing the operation.**

HINT:

Prepare a battery as the power source to deploy the airbag.

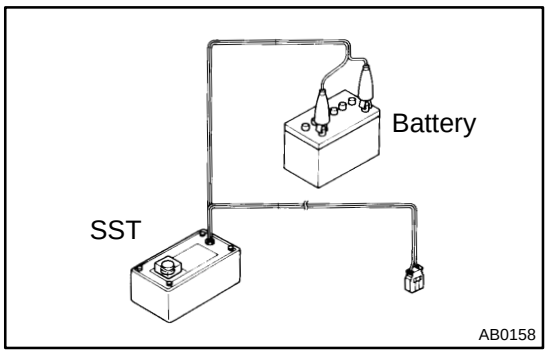

1. AIRBAG DEPLOYMENT WHEN SCRAPPING VEHICLE

(a) Check the function of the SST (see step 1−(a) on page RS−25).

(b) Precaution (see page RS−1 and RS−3).

(c) Disconnect the cable from the negative battery terminal. Wait for 90 seconds after disconnecting the cable to prevent the airbag working.

(d) Remove the glove compartment door (see page BO−111).

(e) Remove the lower No. 2 finish panel (see page BO−111).

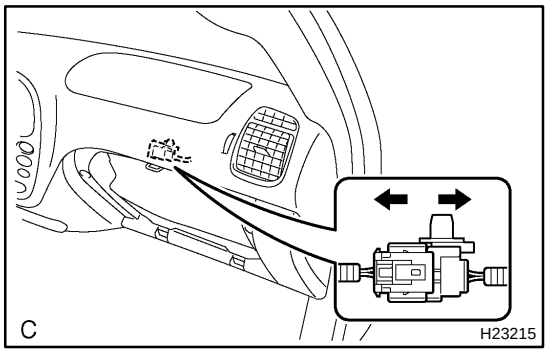

(f) Disconnect the airbag connector (yellow colored one) from the front passenger airbag assembly.

(1) Using a clip remover, disengage the connector clamp.

(2) Disconnect the airbag connector.

NOTICE:

When handling the airbag connector, take care not to damage the airbag wire harness.

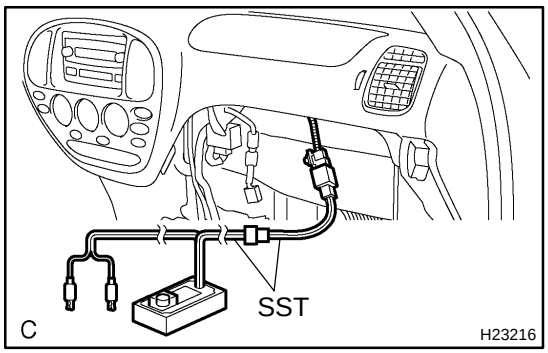

(g) Install the SST.

(1) Connect the SST connector to the front passenger airbag assembly.

SST 09082−00700, 09082−00780

NOTICE:

To avoid damaging the SST connector and wire harness, do not lock the secondary lock of the twin lock.

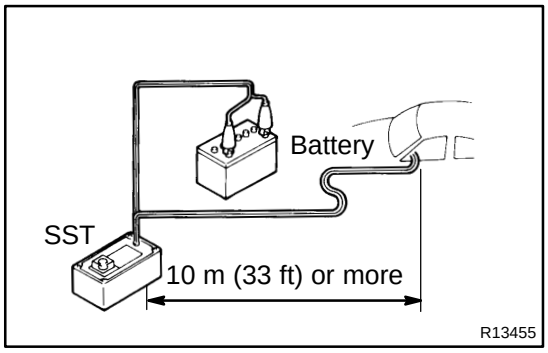

(2) Move the SST at least 10 m (33 ft) away from the vehicle side window.

(3) Maintaining enough clearance for the SST wire harness in the front side window, close all doors and windows of the vehicle.

NOTICE:

Take care not to damage the SST wire harness.

(4) Connect the red clip of the SST to the battery positive (+) terminal and the black clip of the SST to the negative (−) terminal.

(h) Deploy the airbag.
(1) Check that no one is inside the vehicle or within a 10 m (33 ft) radius of the vehicle.
(2) Press the SST activation switch and deploy the airbag.

CAUTION:
- **When deploying the airbag, make sure that no one is near the vehicle.**
- **The front passenger airbag assembly becomes extremely hot when the airbag is deployed, so do not touch it for at least 30 minutes after deployment.**
- **Use gloves and safety glasses when handling a front passenger airbag assembly with a deployed airbag.**
- **Do not apply water, etc. to a front passenger airbag assembly with a deployed airbag.**
- **Always wash your hands with water after completing the operation.**

HINT:
The airbag deploys as the LED of the SST activation switch comes on.

2. DEPLOYMENT WHEN DISPOSING OF FRONT PASSENGER AIRBAG ASSEMBLY ONLY

NOTICE:
- **When disposing of the front passenger airbag assembly, never use the customer's vehicle to deploy the airbag.**
- **Be sure to follow the procedure detailed below when deploying the airbag.**

HINT:
Prepare a battery as the power source to deploy the airbag.

(a) Check the function of the SST (see step 1−(a)).

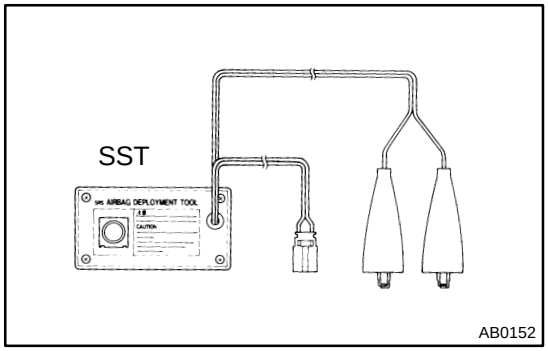

(b) Remove the front passenger airbag assembly (see page RS−36).

CAUTION:
- **When removing the front passenger airbag assembly, work must be started 90 seconds after the ignition switch is turned to the "LOCK" position and the negative (−) terminal cable is disconnected from the battery.**
- **When storing the front passenger airbag assembly, keep the airbag deployment side facing upward.**

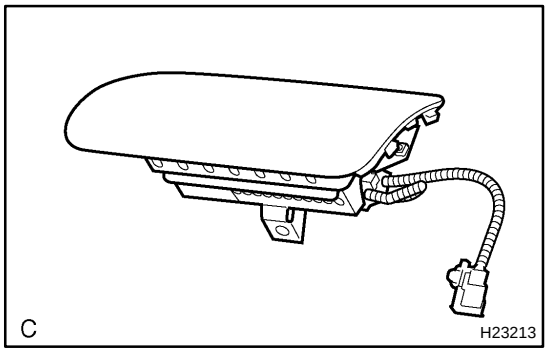

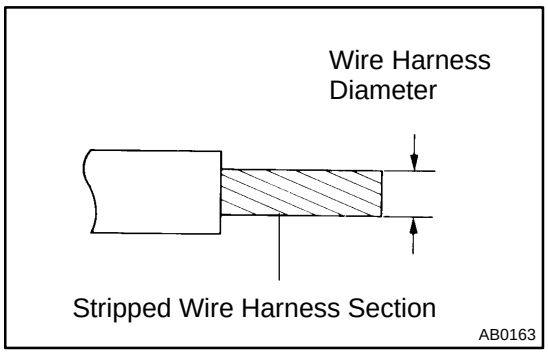

(c) Using a service−purpose wire harness for the vehicle, tie down the front passenger airbag assembly to the tire.

Wire harness: Stripped wire harness section 1.25 mm^2 or more (0.0019 in.^{2} or more)

CAUTION:

If the wire harness is too thin or an alternative object is used to tie down the front passenger airbag assy, it may be snapped by the shock when the airbag is deployed. Always use a wire harness for vehicle use with an area of at least 1.25 mm^2 (0.0019 in.^{2}).

HINT:

To calculate the area of the stripped wire harness section:

Area = 3.14 X (Diameter)^2 divided by 4

(1) Position the front passenger airbag assembly inside the tire with the airbag deployment side facing inside.

Tire size: Must exceed the following dimensions:
Width: 185 mm (7.28 in.)
Inner diameter: 360 mm (14.17 in.)

CAUTION:

- **Make sure that the wire harness is tight. If there is slack in wire harness, the front passenger airbag assembly may become loose due to the shock when the airbag is deployed.**
- **Always tie down the front passenger airbag assembly with the airbag deployment side facing inside.**

NOTICE:

The tire will be marked by the airbag deployment, so use an extra tire.

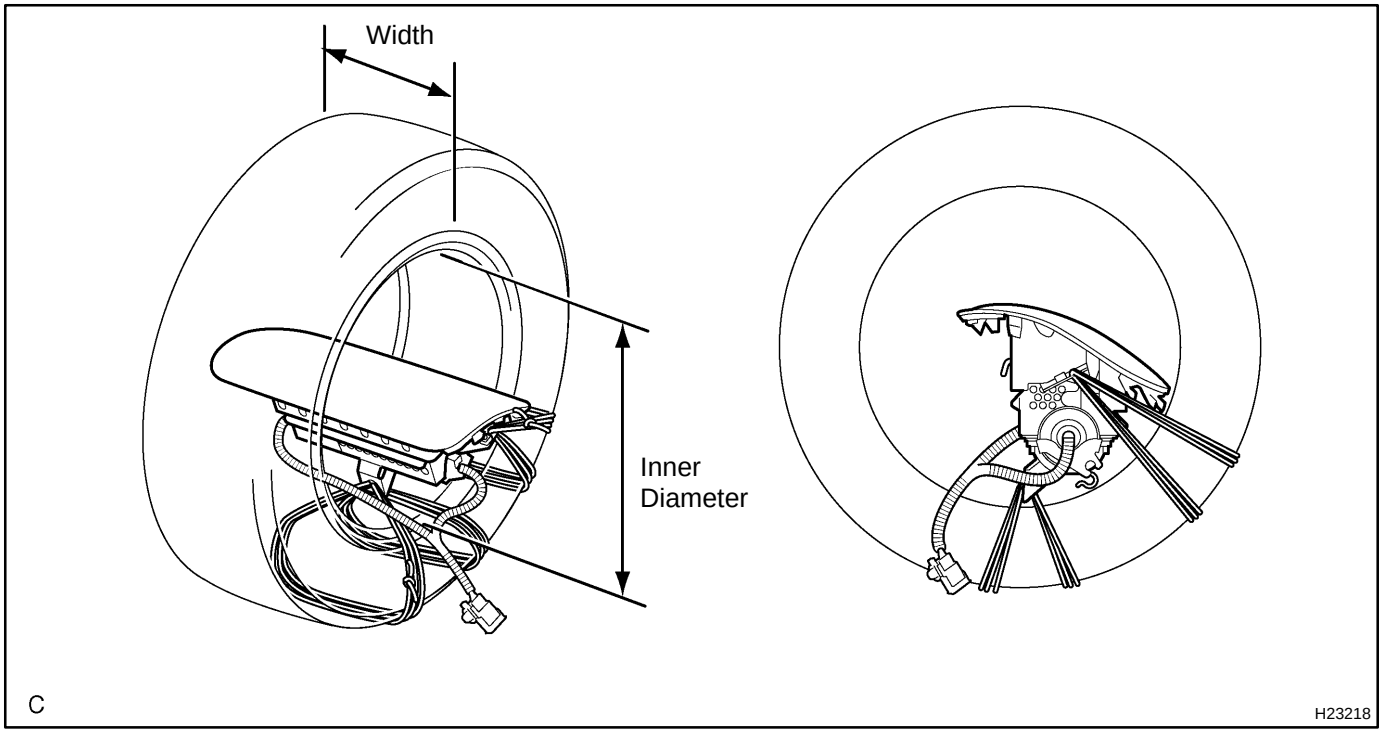

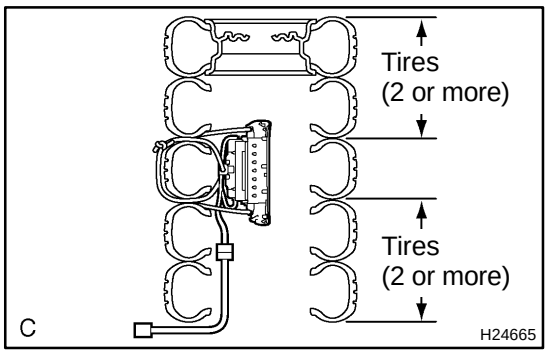

(d) Place the tires.
(1) Place at least 2 tires under the tire which the front passenger airbag assembly is tied to.
(2) Place at least 2 tires over the tire which the front passenger airbag assembly is tied to. The top tire should have the disc wheel installed.

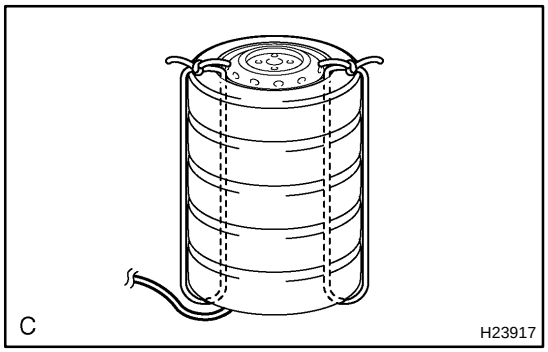

(3) Tie the tires together with 2 wire harness.

CAUTION:
Make sure that the wire harness is tight. Looseness in the wire harness results in the tires coming free due to the shock when the airbag is deployed.

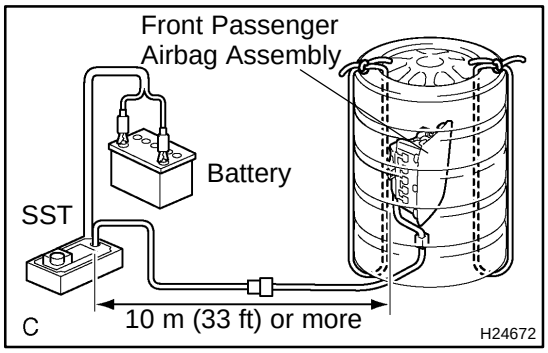

(e) Install the SST.
Connect the SST connector.
SST 09082−00700, 09082−00780

NOTICE:
To avoid damaging the SST connector and wire harness, do not lock the secondary lock of the twin lock. Also, secure some slack for the SST wire harness inside the tire.

(f) Deploy the airbag.
(1) Connect the red clip of the SST to the battery positive (+) terminal and the black clip of the SST to the battery negative (−) terminal.
(2) Check that no one is within a 10 m (33 ft) radius of the tire which the front passenger airbag assembly is tied to.
(3) Press the SST activation switch and deploy the airbag.

CAUTION:
When deploying the airbag, make sure that no one is near the tire.

HINT:
The airbag deploys as the LED of the SST activation switch comes on.

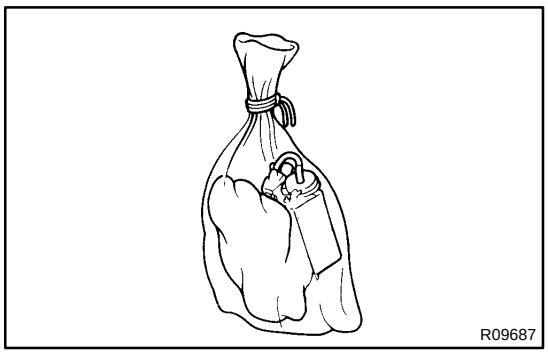

(g) Dispose of the front passenger airbag assembly.

CAUTION:

- **The front passenger airbag assembly becomes extremely hot when the airbag is deployed, so do not touch it for at least 30 minutes after deployment.**
- **Use gloves and safety glasses when handling a front passenger airbag assembly with a deployed airbag.**
- **Do not apply water, etc. to a front passenger airbag assembly with a deployed airbag.**
- **Always wash your hands with water after completing the operation.**

(1) Remove the front passenger airbag assembly from the tire.

(2) Place the front passenger airbag assembly in a plastic bag, tie it tightly and dispose of it as other general part disposal.

RS124−01

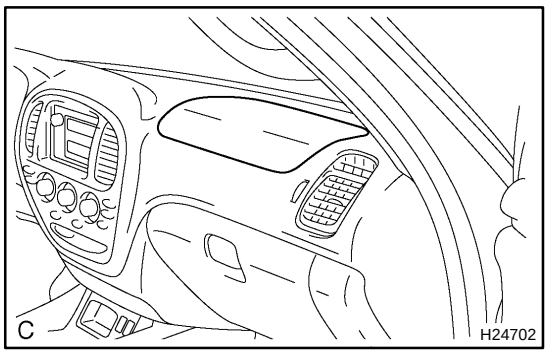

INSPECTION

1. VEHICLES NOT INVOLVED IN A COLLISION

(a) Perform a diagnostic system check (see page DI−1851).

(b) With the front passenger airbag assembly installed on the vehicle, perform a visual check. If there are any defects as mentioned below, replace the front passenger airbag assembly with a new one:

Cuts, minute cracks or marked discoloration on the instrument panel around the front passenger airbag assembly.

2. VEHICLE INVOLVED IN A COLLISION AND AIRBAG IS NOT DEPLOYED

(a) Perform a diagnostic system check (see page DI−1851).

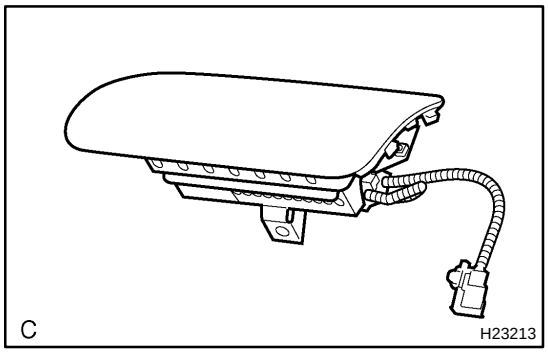

(b) With the front passenger airbag assembly removed from the vehicle, perform a visual check. If there are any defects as mentioned below, replace the front passenger airbag assembly, instrument panel or instrument panel reinforcement with a new one:

- Cuts, minute cracks or marked discoloration on the front passenger airbag assembly.
- Cracks or other damage to the connectors.

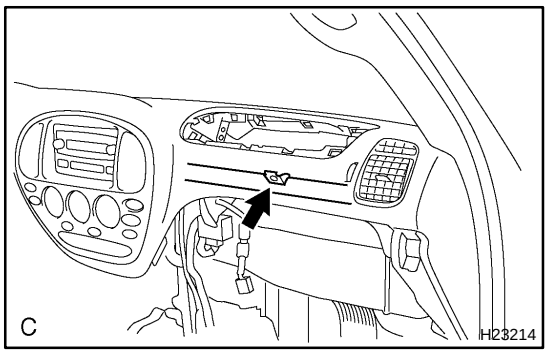

- Deformation or cracks on the instrument panel or instrument panel reinforcement.

CAUTION:

For removal and installation procedures of the front passenger airbag assembly, see page RS−36 and RS−46. Be sure to follow the correct procedure.

RS0I1−03

INSTALLATION

NOTICE:

- **If the front passenger airbag assembly has been dropped, or there are cracks, dents or other defects in the case or connector, replace the front passenger airbag assembly with a new one.**
- **When installing the front passenger airbag assembly, take care it is not pinched between other parts.**
- **Never use airbag parts from another vehicle. When replacing parts, replace them with new ones.**

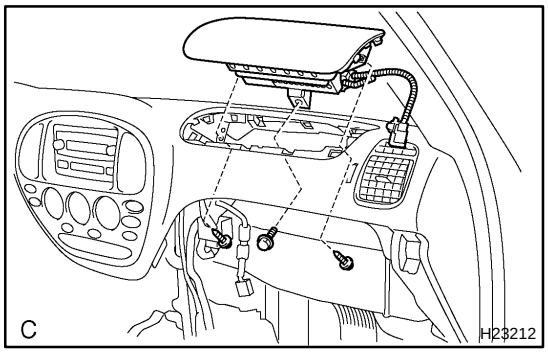

1. INSTALL FRONT PASSENGER AIRBAG ASSEMBLY

(a) Install the bolt to hold the front passenger airbag assembly and instrument panel reinforcement.
Torque: 20 N·m (204 kgf·cm, 15 ft·lbf)

(b) Install the 2 bolts to hold the front passenger airbag assembly and instrument panel.
Torque: 5.0 N·m (51 kgf·cm, 44 in.·lbf)

2. INSTALL LOWER INSTRUMENT COVER
(SEE PAGE BO−120)

3. Access cab (w/ Large type console box):
Double cab:
INSTALL FRONT CONSOLE BOX
(SEE PAGE BO−120)

4. Access cab (w/ Large type console box):
Double cab:
INSTALL REAR CONSOLE BOX
(SEE PAGE BO−120)

5. Access cab (w/ Large type console box):
Double cab:
INSTALL UPPER CONSOLE PANEL
(SEE PAGE BO−120)

6. Access cab (w/ Large type console box):
Double cab:
INSTALL SHIFTING HOLE COVER
(SEE PAGE BO−120)

7. Standard cab:
Access cab (w/o Large type console box):
Double cab (Split type seat):
INSTALL LOWER CENTER COVER
(SEE PAGE BO−120)

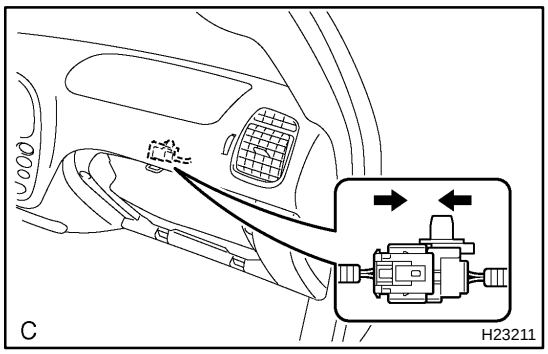

8. CONNECT AIRBAG CONNECTOR

(a) Connect the airbag connector as shown in the illustration.

(b) Attach the connector clamp to the reinforcement.

9. INSTALL LOWER NO. 2 FINISH PANEL (SEE PAGE BO−120)

10. INSTALL GLOVE COMPARTMENT DOOR (SEE PAGE BO−120)

11. INSTALL LOWER FINISH PANEL (SEE PAGE BO−120)

12. Double cab:
INSTALL SIDE PANELS (SEE PAGE BO−120)

13. Double cab:
INSTALL COWL SIDE TRIM BOARDS (SEE PAGE BO−120)

14. Standard cab:
Access cab:
INSTALL COWL SIDE TRIMS (SEE PAGE BO−120)

15. INSTALL FRONT DOOR SCUFF PLATES (SEE PAGE BO−120)

16. CONNECT CABLE TO NEGATIVE BATTERY TERMINAL

17. INSPECT SRS WARNING LIGHT (SEE PAGE DI−1839)

RS123−01

REMOVAL

NOTICE:

- **If the wiring connector of the SRS is disconnected and the ignition switch is in the ON or ACC position, DTCs will be recorded.**
- **Never use airbag parts from another vehicle. When replacing parts, replace them with new ones.**

1. **PRECAUTION (SEE PAGE RS−1 AND RS−3)**
2. **DISCONNECT CABLE FROM NEGATIVE BATTERY TERMINAL**

Wait for 90 seconds after disconnecting the cable to prevent the airbag working.

3. **REMOVE FRONT DOOR SCUFF PLATES (SEE PAGE BO−111)**
4. **Standard cab:**
   Access cab:
   REMOVE COWL SIDE TRIMS (SEE PAGE BO−111)
5. **Double cab:**
   REMOVE COWL SIDE TRIM BOARDS (SEE PAGE BO−111)
6. **Double cab:**
   REMOVE SIDE PANELS (SEE PAGE BO−111)
7. **REMOVE LOWER FINISH PANEL (SEE PAGE BO−111)**
8. **REMOVE GLOVE COMPARTMENT DOOR (SEE PAGE BO−111)**
9. **REMOVE LOWER NO. 2 FINISH PANEL (SEE PAGE BO−111)**
10. **Standard cab:**
    Access cab (w/o Large type console box):
    Double cab (Split type seat):
    REMOVE LOWER CENTER COVER (SEE PAGE BO−111)
11. **Access cab (w/ Large type console box):**
    Double cab:
    REMOVE SHIFTING HOLE COVER (SEE PAGE BO−111)
12. **Access cab (w/ Large type console box):**
    Double cab:
    REMOVE UPPER CONSOLE PANEL (SEE PAGE BO−111)
13. **Access cab (w/ Large type console box):**
    Double cab:
    REMOVE REAR CONSOLE BOX (SEE PAGE BO−111)
14. **Access cab (w/ Large type console box):**
    Double cab:
    REMOVE FRONT CONSOLE BOX (SEE PAGE BO−111)

15. REMOVE LOWER INSTRUMENT COVER (SEE PAGE BO−111)

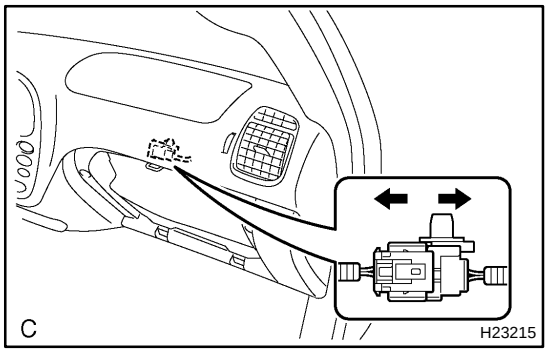

16. REMOVE FRONT PASSENGER AIRBAG ASSEMBLY

(a) Using a clip remover, disengage the connector clamp.

(b) Disconnect the airbag connector.

NOTICE:

When handling the airbag connector, take care not to damage the airbag wire harness.

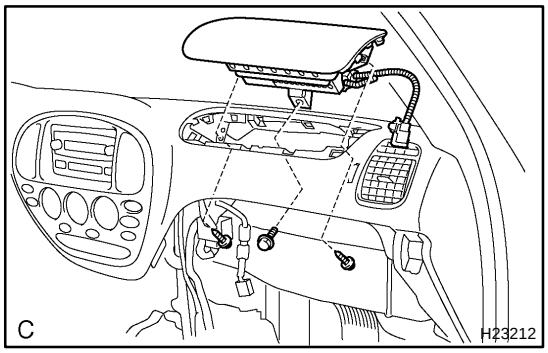

(c) Remove the bolt holding the front passenger airbag assembly and instrument panel.

(d) Remove the 2 bolts holding the front passenger airbag assembly and instrument panel reinforcement.

(e) Remove the front passenger airbag assembly.

CAUTION:

- **Do not store the front passenger airbag assembly with the airbag deployment side facing downward.**
- **Never disassemble the front passenger airbag assembly.**

RS018−32

REPLACEMENT

REPLACEMENT REQUIREMENTS

In the following cases, replace the front passenger airbag assembly, instrument panel or instrument panel reinforcement with a new one.

Case	Replacing part
The airbag has been deployed.	Front passenger airbag assembly
The front passenger airbag assembly has been found to be faulty in trouble-shooting.	Front passenger airbag assembly
The front passenger airbag assembly has been found to be faulty while checking items (see page RS−38).	Front passenger airbag assembly
The instrument panel has been found to be faulty while checking items (see page RS−38).	Instrument panel
The instrument panel reinforcement has been found to be faulty while checking items (see page RS−38).	Instrument panel reinforcement
The front passenger airbag assembly has been dropped.	Front passenger airbag assembly

CAUTION:

For replacement of the front passenger airbag assembly, see page RS−36 and RS−46. Be sure to follow the correct procedure.

SEAT POSITION SENSOR (For Front Passenger Seat)

RS12X−01

COMPONENTS

Split Type:

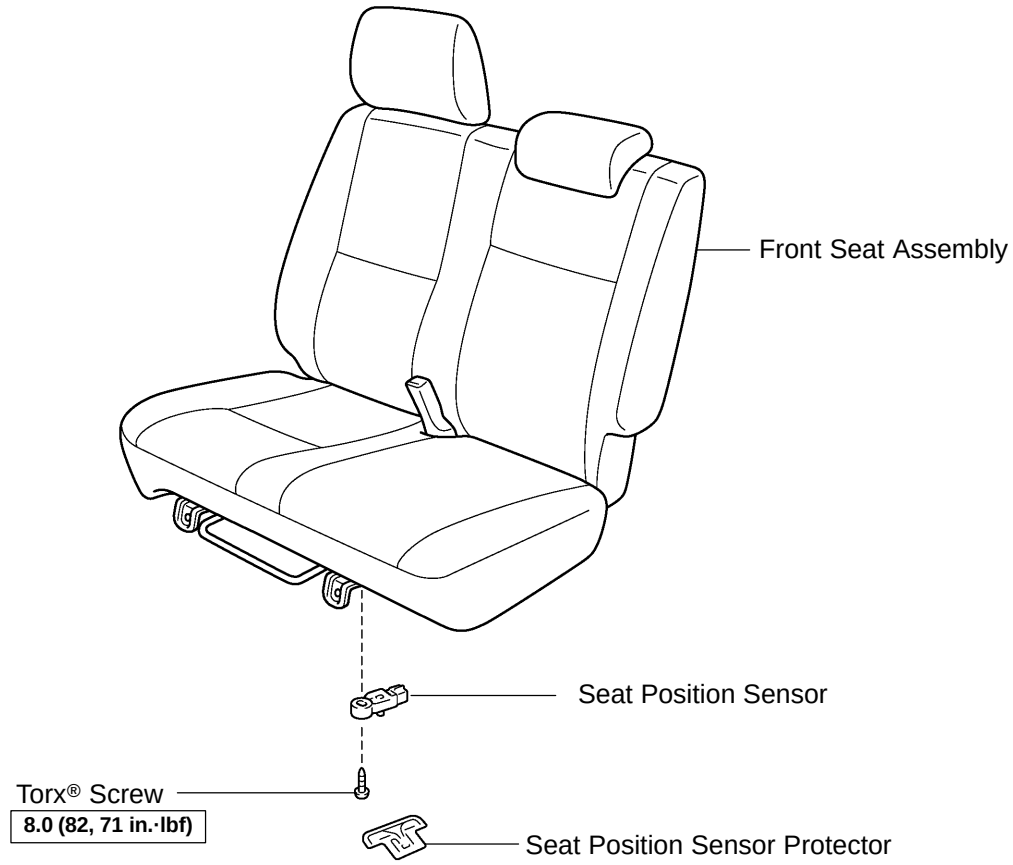

N

N·m (kgf·cm, ft·lbf) : Specified torque

cmc0231

Bench Type:

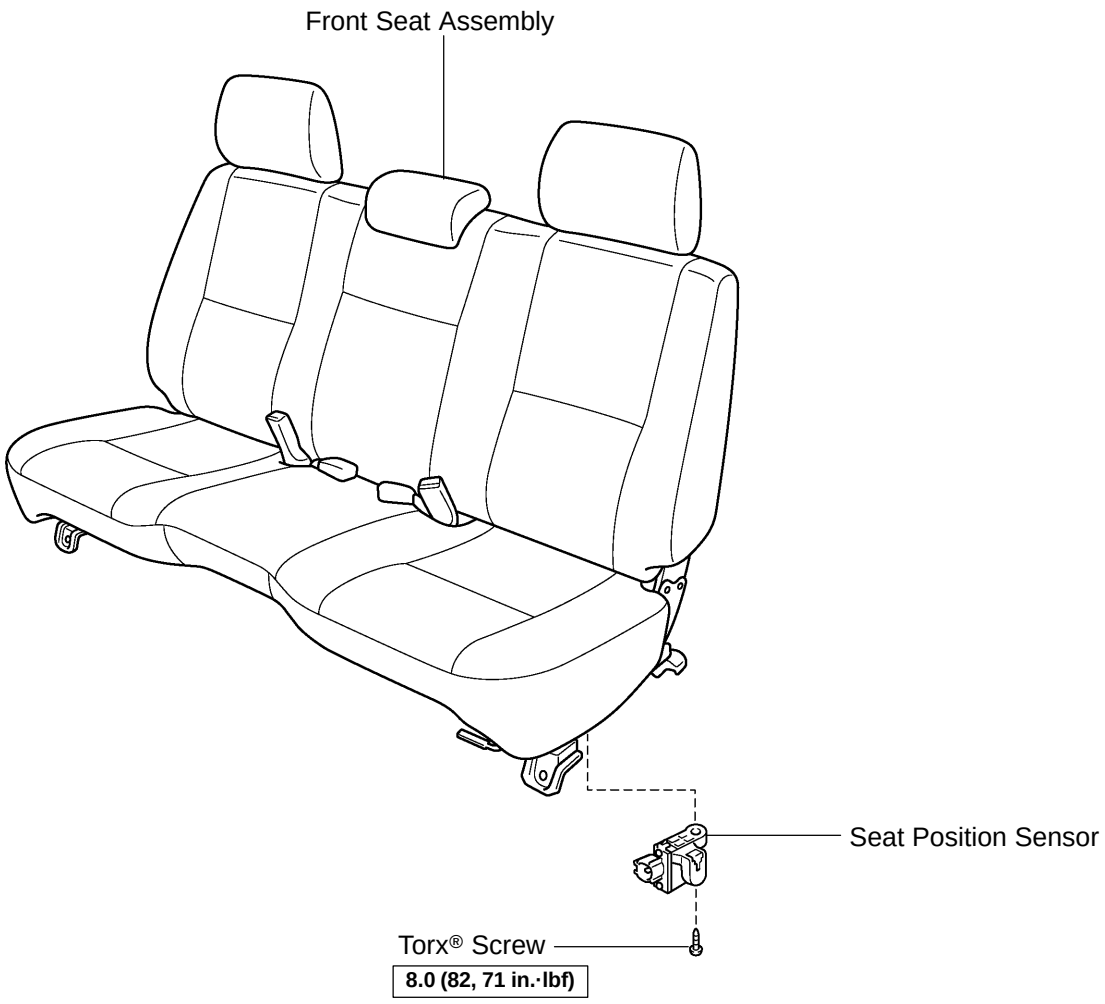

N

N·m (kgf·cm, ft·lbf) : Specified torque

cmc0232

RS0UV−07

REMOVAL

NOTICE:

- **If the wiring connector of the SRS is disconnected with the ignition switch in the ON position, DTCs will be recorded.**
- **Never use SRS parts from another vehicle. When replacing the parts, replace them with new ones.**
- **Never reuse a seat position sensor assembly if an airbag has previously deployed in a collision.**

1. **PRECAUTION (SEE PAGE RS−1 AND RS−3)**
2. **DISCONNECT CABLE FROM NEGATIVE BATTERY TERMINAL**

Wait for 90 seconds after disconnecting the cable to prevent the airbag working.

3. **Bench type:**
   REMOVE FRONT SEAT ASSEMBLY
   (SEE PAGE BO−166)
4. **Split type:**
   REMOVE FRONT SEAT ASSEMBLY
   (SEE PAGE BO−188)
5. **Split type:**
   REMOVE SEAT POSITION SENSOR PROTECTOR

Remove the seat position sensor protector from the seat position sensor.

6. REMOVE SEAT POSITION SENSOR

(a) Disconnect the connector from the seat position sensor.

(b) Using a torx® socket wrench (T30), remove the torx® screw and the seat position sensor.

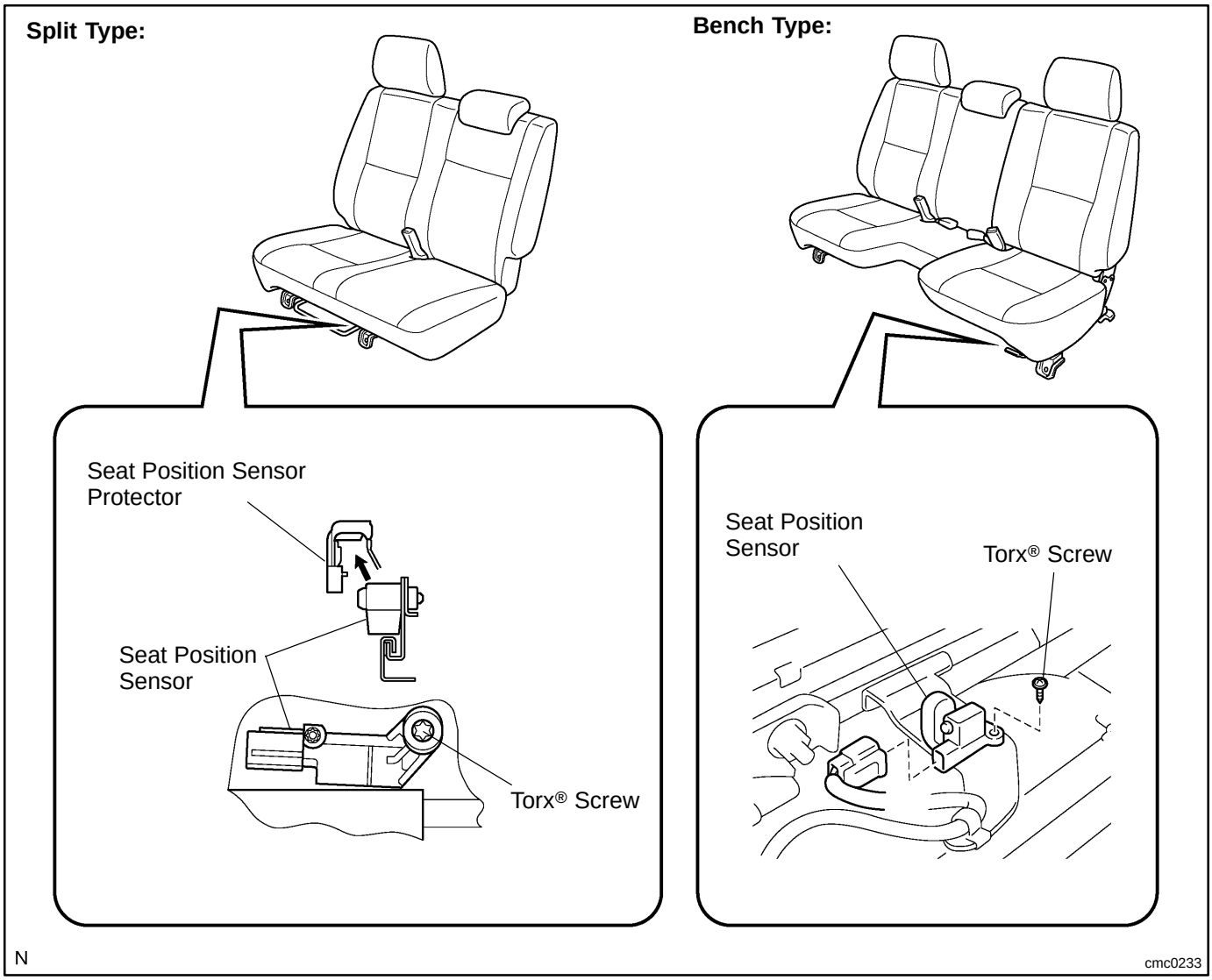

RS0UW−07

INSPECTION

1. VEHICLE NOT INVOLVED IN A COLLISION

Perform a diagnostic system check (see page DI−1851).

2. VEHICLE INVOLVED IN A COLLISION

(a) Perform a diagnostic system check (see page DI−1851).

(b) Even if the airbag was not deployed, perform a visual check for damage to the seat position sensor. If there are any defects mentioned below, replace the seat position sensor with a new one:

- Cracks, dents or chips in the case.
- Cracks or other damage to the connector.

CAUTION:

For removal and installation procedures of the seat position sensor, see page RS−145 and RS−149. Be sure to follow the correct procedure.

RS0UX−06

REPLACEMENT

REPLACEMENT REQUIREMENTS

In the following cases, replace the seat position sensor with a new one:

- The seat position sensor has been found to be faulty in troubleshooting.
- The seat position sensor has been dropped.

CAUTION:

For removal and installation procedures of the seat position sensor, see page RS−145 and RS−149. Be sure to follow the correct procedure.

RS0UY−07

INSTALLATION

NOTICE:

- **Never use SRS parts from another vehicle. When replacing the parts, replace them with new ones.**
- **Never reuse a seat position sensor involved in a collision when the airbag has deployed.**
- **If the seat position sensor has been dropped, or there are any cracks, dents or other defects in the case, bracket or connector, replace it with a new one.**
- **When installing the seat position sensor, be careful that the SRS wiring does not interfere with other parts and that it is not pinched between other parts.**
- **After installing, shake the seat position sensor to check that there is no looseness.**

1. INSTALL SEAT POSITION SENSOR

(a) Using a torx® socket wrench, install the seat position sensor.

Torque: 8.0 N·m (82 kgf·cm, 71 in.·lbf)

NOTICE:

Using a feeler gauge of 1 mm (0.039 in.), make a clearance between the seat position sensor and the seat rail.

(b) Make sure that a clearance between the seat position sensor and the seat rail is between 0.6 mm (0.023 in.) and 2 mm (0.079 in.).

(c) Connect the connector to the seat position sensor.

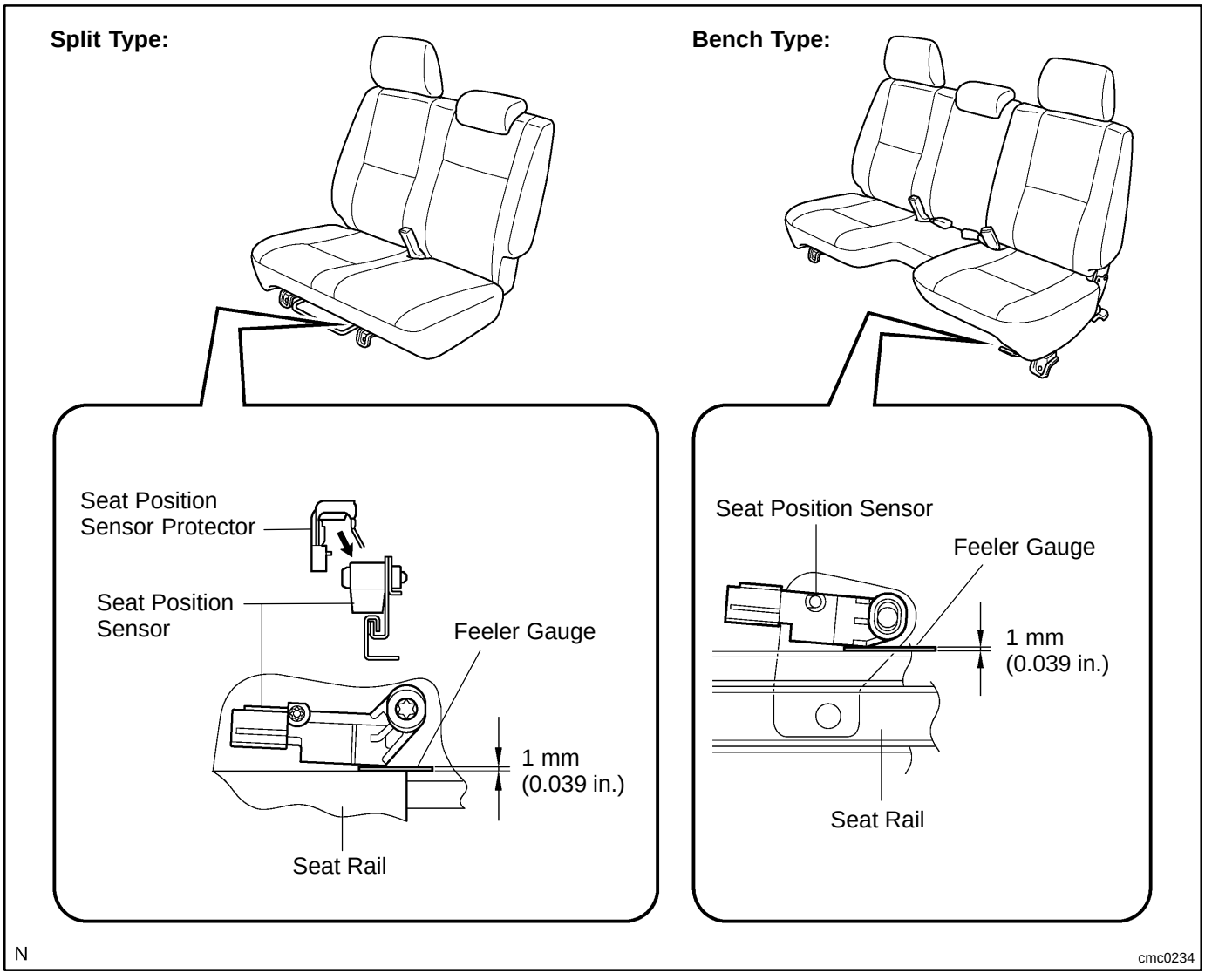

2. **Split type:**
   INSTALL SEAT POSITION SENSOR PROTECTOR

Install the seat position sensor protector to the seat position sensor.

3. **Split type:**
   INSTALL FRONT SEAT ASSEMBLY RH
   (SEE PAGE BO−201)
4. **Bench type:**
   INSTALL FRONT SEAT ASSEMBLY
   (SEE PAGE BO−175)
5. **CONNECT CABLE TO NEGATIVE BATTERY TERMINAL**
6. **INSPECT SRS WARNING LIGHT (SEE PAGE DI−1839)**

OCCUPANT CLASSIFICATION ECU (Except Separate Seat)

RS0UU−06

COMPONENTS

Split Type:

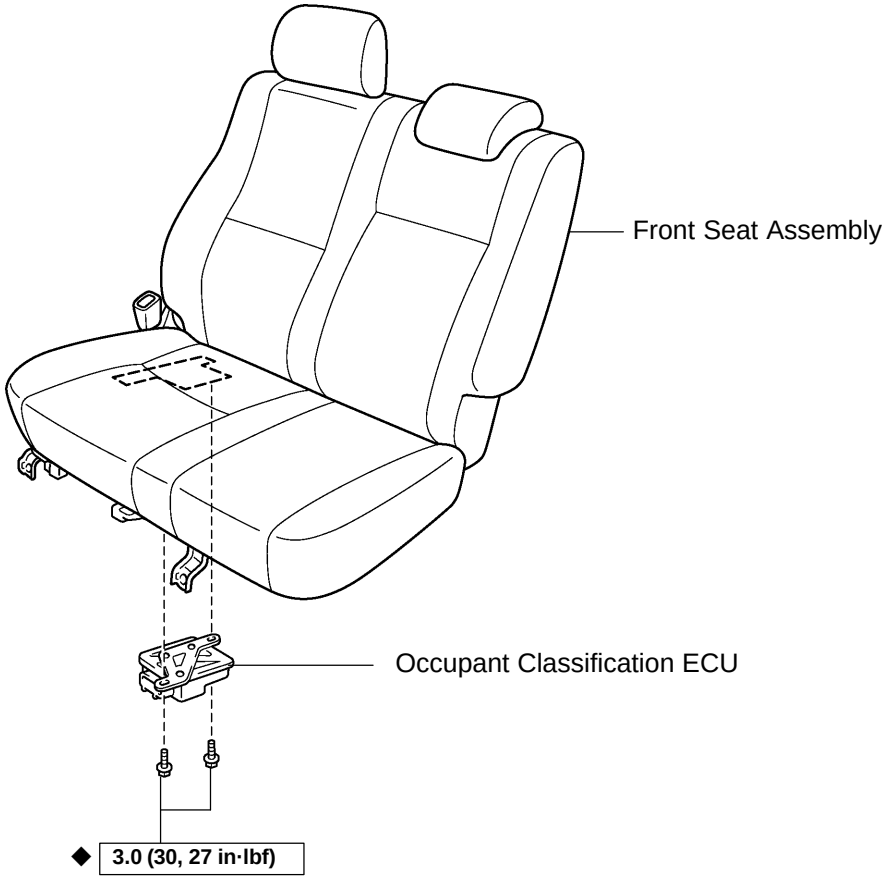

N

◆ Non−reusable part

N·m (kgf·cm, ft·lbf) : Specified torque

cmc0236

Bench Type:

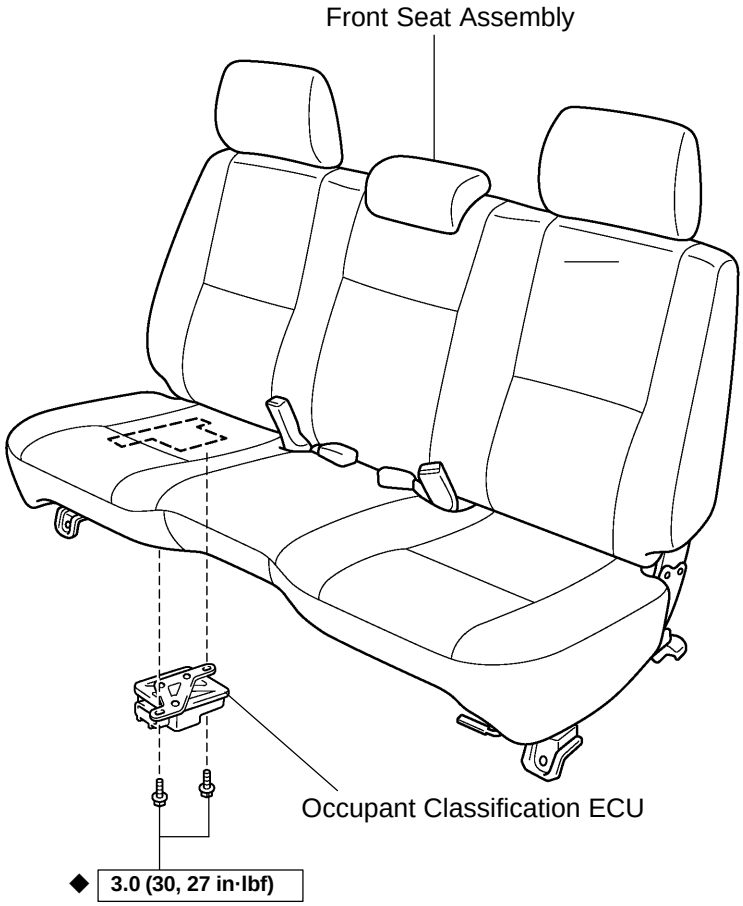

◆ Non–reusable part

N N·m (kgf·cm, ft·lbf) : Specified torque

cmc0235

RS0UV−08

REMOVAL

NOTICE:

- **If the wiring connector of the SRS is disconnected with the ignition switch in the ON position, DTCs will be recorded.**
- **Never use SRS parts from another vehicle. When replacing the parts, replace them with new ones.**
- **Never reuse an occupant classification ECU if an airbag has previously deployed in a collision.**

1. **PRECAUTION (SEE PAGE RS−1 AND RS−3)**
2. **When only occupant classification ECU is removed: REGISTRATION (SEE PAGE DI−1828−1)**
3. **DISCONNECT CABLE FROM NEGATIVE BATTERY TERMINAL**

Wait for 90 seconds after disconnecting the cable to prevent the airbag working.

4. **Bench type:**
   REMOVE FRONT SEAT ASSEMBLY (SEE PAGE BO−165)
5. **Split type:**
   REMOVE FRONT SEAT ASSEMBLY (SEE PAGE BO−188)

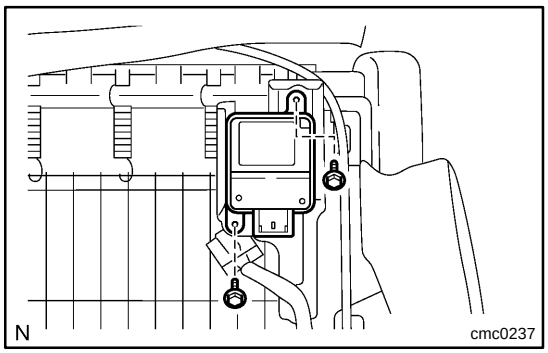

6. **REMOVE OCCUPANT CLASSIFICATION ECU**

(a) Disconnect the connector from the occupant classification ECU.

(b) Remove the 2 bolts and the occupant classification ECU.

RS0UW–08

INSPECTION

1. VEHICLE NOT INVOLVED IN A COLLISION

Perform a diagnostic system check (see page DI–1851).

2. VEHICLE INVOLVED IN A COLLISION

(a) Perform a diagnostic system check (see page DI–1851).

(b) Even if the airbag was not deployed, perform a visual check for damage to the seat position sensor assembly. If there are any defects mentioned below, replace the occupant classification ECU with a new one:

- Cracks, dents or chips in the case.
- Cracks or other damage to the connector.

CAUTION:

For removal and installation procedures of the occupant classification ECU, see page RS–154 and RS–157. Be sure to follow the correct procedure.

RS0UX−07

REPLACEMENT

REPLACEMENT REQUIREMENTS

In the following cases, replace the occupant classification ECU with a new one.

- The occupant classification ECU has been found to be faulty in troubleshooting.
- The occupant classification ECU has been dropped.

NOTICE:

When replacing the occupant classification ECU, ECU data is surely rewritten. (The case where occupant classification ECU are replaced as a part of front seat cushion assembly (service kit) is removed.) (See page DI−1828−1)

CAUTION:

For removal and installation procedures of the occupant classification ECU, see page RS−154 and RS−157. Be sure to follow the correct procedure.

RS0UY–08

INSTALLATION

NOTICE:

- **Never use SRS parts from another vehicle. When replacing the parts, replace them with new ones.**
- **Never reuse an occupant classification ECU involved in a collision when the airbag has deployed.**
- **If the occupant classification ECU has been dropped, or there are any cracks, dents or other defects in the case, bracket or connector, replace it with a new one.**
- **When installing the occupant classification ECU, be careful that the SRS wiring does not interfere with other parts and that it is not pinched between other parts.**
- **After installing, shake the occupant classification ECU to check that there is no looseness.**

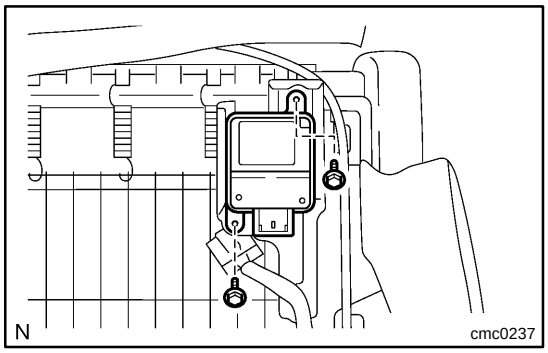

1. INSTALL OCCUPANT CLASSIFICATION ECU

(a) Install the occupant classification ECU with new 2 bolts.
Torque: 3.0 N·m (30 kgf·cm, 27 in.·lbf)

NOTICE:

When replacing the occupant classification ECU, replace the bolts with new one.

(b) Connect the connector to the occupant classification ECU.

2. Split type:
INSTALL FRONT SEAT ASSEMBLY RH
(SEE PAGE BO–201)

3. Bench type:
INSTALL FRONT SEAT ASSEMBLY
(SEE PAGE BO–175)

4. CONNECT CABLE TO NEGATIVE BATTERY TERMINAL

5. When only occupant classification ECU is replaced:
REGISTRATION (SEE PAGE DI–1828–1)

6. PERFORM ZERO POINT CALIBRATION AND SENSITIVITY CHECK (SEE PAGE DI–1829)

7. INSPECT SRS WARNING LIGHT (SEE PAGE DI–1839)

FRONT SEAT CUSHION ASSEMBLY (w/ Occupant Classification ECU, Occupant Classification Sensor) (Except Separate Seat)

RS0UU−06

COMPONENTS

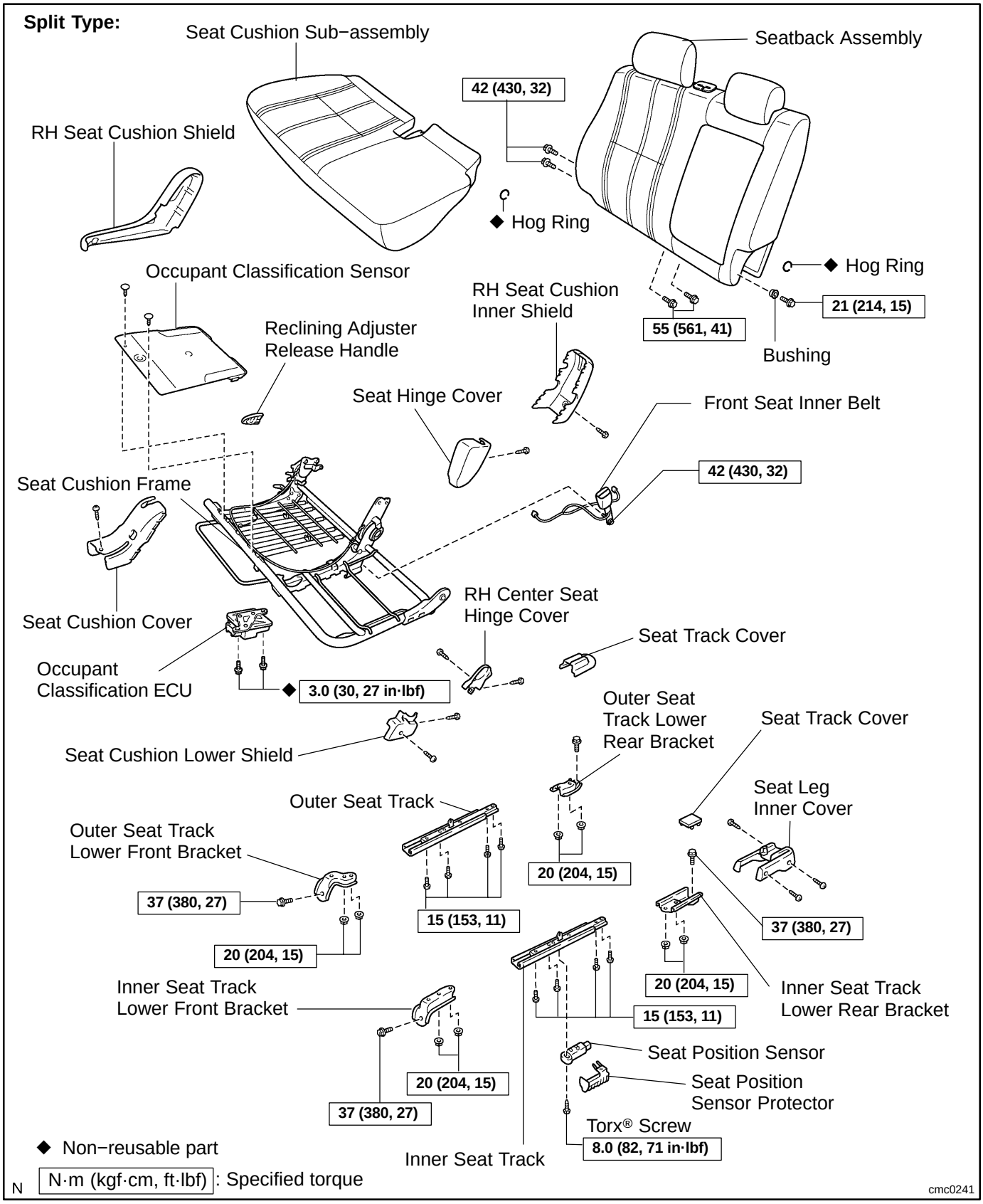

Bench Type:

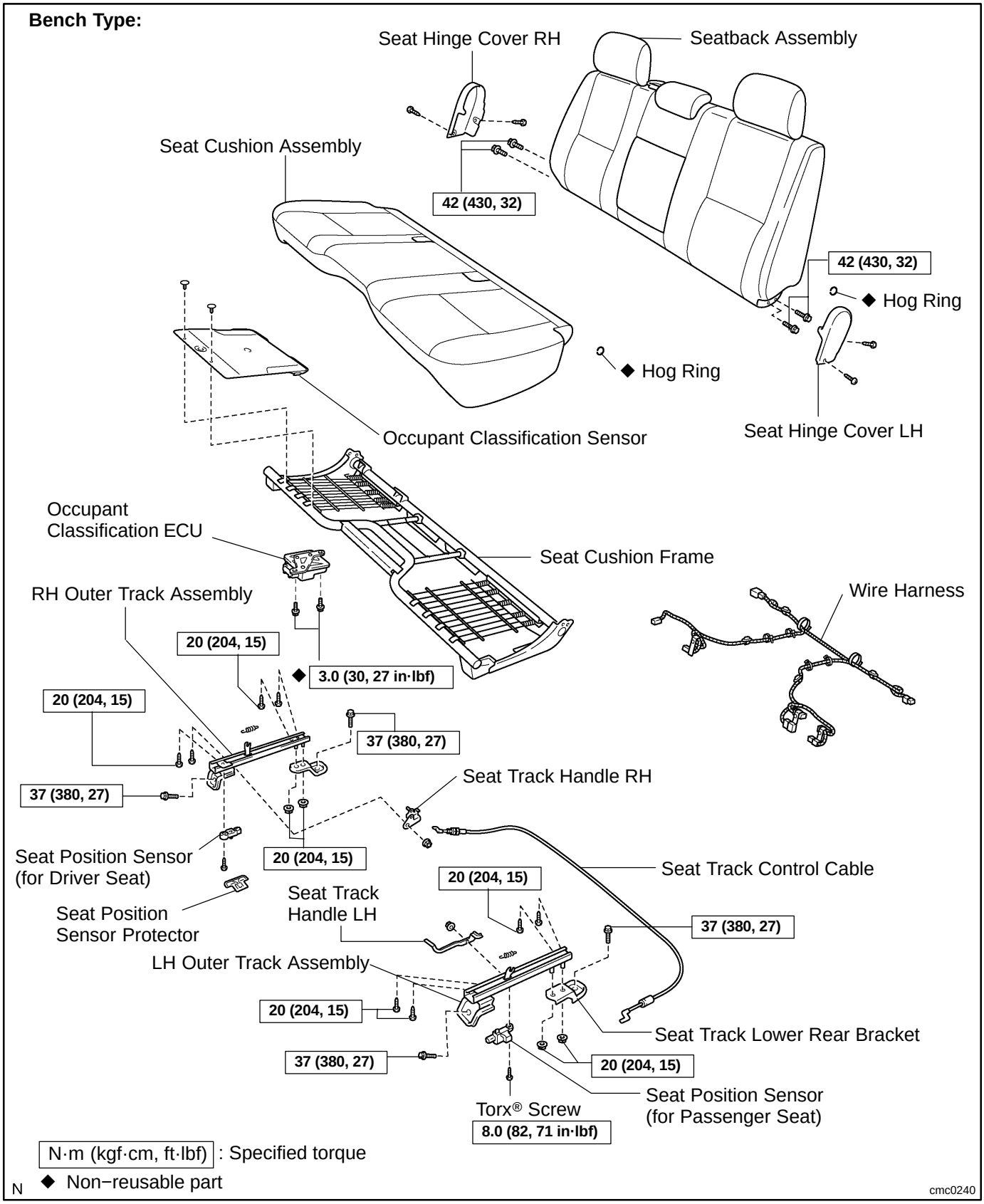

N·m (kgf·cm, ft·lbf) : Specified torque

◆ Non−reusable part

N

cmc0240

RS0UV−08

REMOVAL

NOTICE:

- **If the wiring connector of the SRS is disconnected with the ignition switch in the ON position, DTCs will be recorded.**
- **Never use SRS parts from another vehicle. When replacing the parts, replace them with new ones.**
- **Never reuse an occupant classification sensor if a airbag has previously deployed in a collision.**

1. **PRECAUTION (SEE PAGE RS−1 AND RS−3)**
2. **DISCONNECT CABLE FROM NEGATIVE BATTERY TERMINAL**

Wait for 90 seconds after disconnecting the cable to prevent the airbag working.

3. **Bench type:**
   REMOVE FRONT SEAT (SEE PAGE BO−166)
4. **Bench type:**
   REMOVE OCCUPANT CLASSIFICATION ECU (SEE PAGE RS−154)
5. **Bench type:**
   REMOVE SEAT HINGE COVER LH AND RH (SEE PAGE BO−167)
6. **Bench type:**
   REMOVE SEATBACK ASSEMBLY (SEE PAGE BO−167)
7. **Bench type:**
   REMOVE 2 SEAT TRACK LOWER REAR BRACKETS (SEE PAGE BO−167)
8. **Bench type:**
   REMOVE LH OUTER TRACK ASSEMBLY (SEE PAGE BO−167)
9. **Bench type:**
   REMOVE RH OUTER TRACK ASSEMBLY (SEE PAGE BO−167)
10. **Bench type:**
    REMOVE SEAT TRACK HANDLE LH (SEE PAGE BO−167)
11. **Bench type:**
    REMOVE SEAT TRACK HANDLE RH (SEE PAGE BO−167)
12. **Bench type:**
    REMOVE SEAT CUSHION SUB−ASSEMBLY (SEE PAGE BO−167)
13. **Split type (Passenger's Side):**
    REMOVE SEAT TRACK COVER (SEE PAGE BO−188)
14. **Split type (Passenger's Side):**
    REMOVE FRONT SEAT ASSEMBLY RH (SEE PAGE BO−188)

15. **Split type (Passenger's Side):**
REMOVE OCCUPANT CLASSIFICATION ECU
(SEE PAGE RS−154)
16. **Split type (Passenger's Side):**
REMOVE SEAT LEG INNER COVER
(SEE PAGE BO−189)
17. **Split type (Passenger's Side):**
REMOVE RECLINING ADJUSTER RELEASE HANDLE
(SEE PAGE BO−189)
18. **Split type (Passenger's Side):**
REMOVE RH SEAT CUSHION SHIELD
(SEE PAGE BO−189)
19. **Split type (Passenger's Side):**
REMOVE SEAT CUSHION LOWER SHIELD
(SEE PAGE BO−189)
20. **Split type (Passenger's Side):**
REMOVE SEATBACK ASSEMBLY
(SEE PAGE BO−189)
21. **Split type (Passenger's Side):**
REMOVE RH CENTER SEAT HINGE COVER
(SEE PAGE BO−189)
22. **Split type (Passenger's Side):**
REMOVE RH SEAT CUSHION INNER SHIELD AND SEAT CUSHION COVER (SEE PAGE BO−189)
23. **Split type (Passenger's Side):**
REMOVE SEAT HINGE COVER (SEE PAGE BO−189)
24. **Split type (Passenger's Side):**
REMOVE OUTER SEAT TRACK LOWER FRONT AND REAR BRACKET (SEE PAGE BO−189)
25. **Split type (Passenger's Side):**
REMOVE INNER SEAT TRACK LOWER FRONT AND REAR BRACKET (SEE PAGE BO−189)
26. **Split type (Passenger's Side):**
REMOVE OUTER SEAT TRACK (SEE PAGE BO−189)
27. **Split type (Passenger's Side):**
REMOVE INNER SEAT TRACK (SEE PAGE BO−189)
28. **Split type (Passenger's Side):**
REMOVE SEAT CUSHION SUB−ASSEMBLY
(SEE PAGE BO−189)

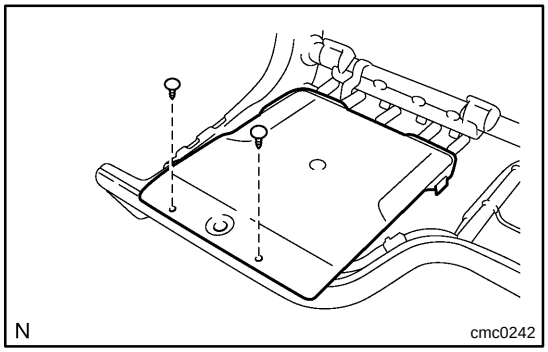

29. **REMOVE OCCUPANT CLASSIFICATION SENSOR**
(a) Disconnect the connector from the occupant classification sensor.
(b) Cut the band clamp from the seat cushion frame.
(c) Disengage the clamps from the seat cushion frame.
(d) Remove the 2 clips and the occupant classification sensor.

RS0UY−08

INSTALLATION

NOTICE:

- **Install new parts from prepared service kits.**
- **Never use SRS parts from another vehicle.**
- **Never reuse a occupant classification sensor involved in a collision when the airbag has deployed.**
- **If the occupant classification sensor has been dropped, or there are any cracks, dents or other defects in the case, bracket or connector, replace it with a new one.**
- **When installing the occupant classification sensor, be careful that the SRS wiring does not interfere with other parts and that it is not pinched between other parts.**
- **After installing, shake the occupant classification sensor to check that there is no looseness.**

1. INSTALL OCCUPANT CLASSIFICATION SENSOR

(a) Install the occupant classification sensor with the 2 clips.

(b) Engage the clamps to the seat cushion frame.

(c) Fix the tube by new band clamp on the marking on the outer side of the occupant classification sensor.

HINT:

Leave the end of the band clamp 5 to 10 mm (0.20 to 0.39 in.) and cut.

(d) Connect the connector to the occupant classification sensor.

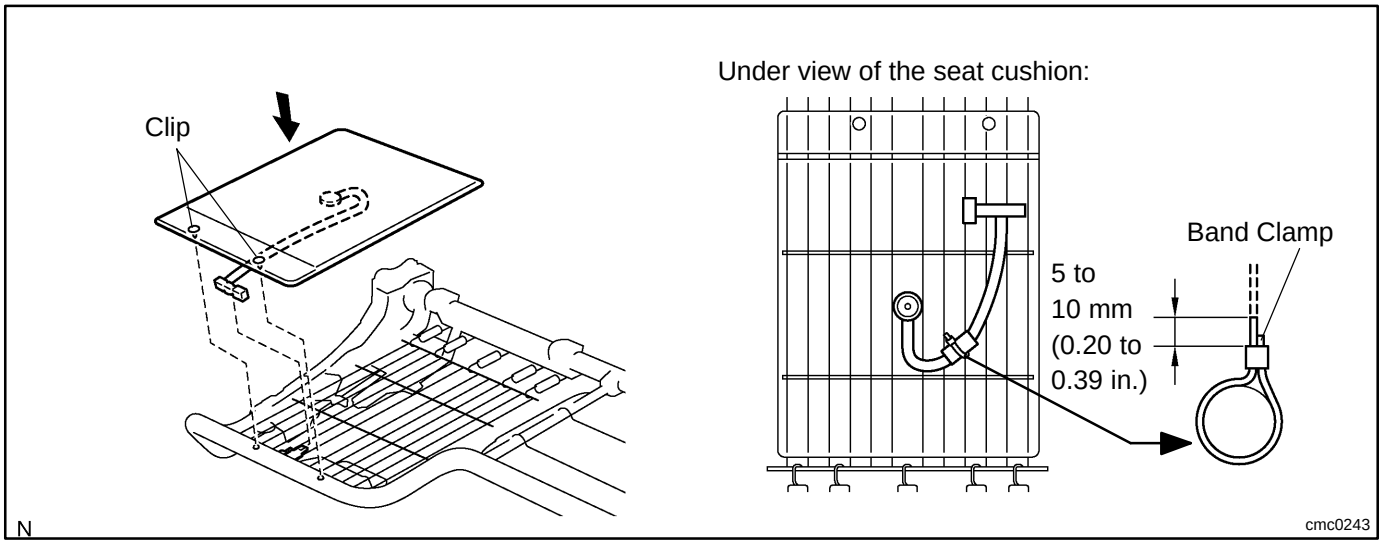

2. Bench type:
INSTALL SEAT CUSHION SUB−ASSEMBLY
(SEE PAGE BO−171)

3. **Bench type:**
INSTALL SEAT TRACK HANDLE RH
(SEE PAGE BO−171)
4. **Bench type:**
INSTALL SEAT TRACK HANDLE LH
(SEE PAGE BO−171)
5. **Bench type:**
INSTALL RH OUTER TRACK ASSEMBLY
(SEE PAGE BO−171)
6. **Bench type:**
INSTALL LH OUTER TRACK ASSEMBLY
(SEE PAGE BO−171)
7. **Bench type:**
INSTALL 2 SEAT TRACK LOWER REAR BRACKETS
(SEE PAGE BO−171)
8. **Bench type:**
INSTALL SEATBACK ASSEMBLY
(SEE PAGE BO−171)
9. **Bench type:**
INSTALL SEAT HINGE COVER LH AND RH
(SEE PAGE BO−171)
10. **Bench type:**
INSTALL OCCUPANT CLASSIFICATION ECU
(SEE PAGE RS−157)
11. **Bench type:**
INSTALL FRONT SEAT (SEE PAGE BO−175)
12. **Split type (Passenger's Side):**
INSTALL SEAT CUSHION FRAME
(SEE PAGE BO−195)
13. **Split type (Passenger's Side):**
INSTALL INNER SEAT TRACK (SEE PAGE BO−195)
14. **Split type (Passenger's Side):**
INSTALL OUTER SEAT TRACK (SEE PAGE BO−195)
15. **Split type (Passenger's Side):**
INSTALL INNER SEAT TRACK LOWER FRONT AND REAR BRACKET (SEE PAGE BO−195)
16. **Split type (Passenger's Side):**
INSTALL OUTER SEAT TRACK LOWER FRONT AND REAR BRACKET (SEE PAGE BO−195)
17. **Split type (Passenger's Side):**
INSTALL SEAT HINGE COVER (SEE PAGE BO−195)
18. **Split type (Passenger's Side):**
INSTALL RH SEAT CUSHION INNER SHIELD AND SEAT CUSHION COVER (SEE PAGE BO−195)
19. **Split type (Passenger's Side):**
INSTALL RH CENTER SEAT HINGE COVER
(SEE PAGE BO−195)
20. **Split type (Passenger's Side):**
INSTALL SEATBACK ASSEMBLY
(SEE PAGE BO−195)

21. **Split type (Passenger's Side): INSTALL SEAT CUSHION LOWER SHIELD (SEE PAGE BO−195)**
22. **Split type (Passenger's Side): INSTALL RH SEAT CUSHION SHIELD (SEE PAGE BO−195)**
23. **Split type (Passenger's Side): INSTALL RECLINING ADJUSTER RELEASE HANDLE (SEE PAGE BO−195)**
24. **Split type (Passenger's Side): INSTALL SEAT LEG INNER COVER (SEE PAGE BO−195)**
25. **Split type (Passenger's Side): INSTALL OCCUPANT CLASSIFICATION ECU (SEE PAGE RS−157)**
26. **Split type (Passenger's Side): INSTALL FRONT SEAT ASSEMBLY RH (SEE PAGE BO−201)**
27. **Split type (Passenger's Side): INSTALL SEAT TRACK COVER (SEE PAGE BO−201)**
28. **CONNECT CABLE TO NEGATIVE BATTERY TERMINAL**
29. **PERFORM ZERO POINT CALIBRATION AND SENSITIVITY CHECK (SEE PAGE DI−1829)**
30. **INSPECT SRS WARNING LIGHT (SEE PAGE DI−1839)**

SEAT BELT TENSION SENSOR (Except Separate Seat)

RS0UU−06

COMPONENTS

Split Type:

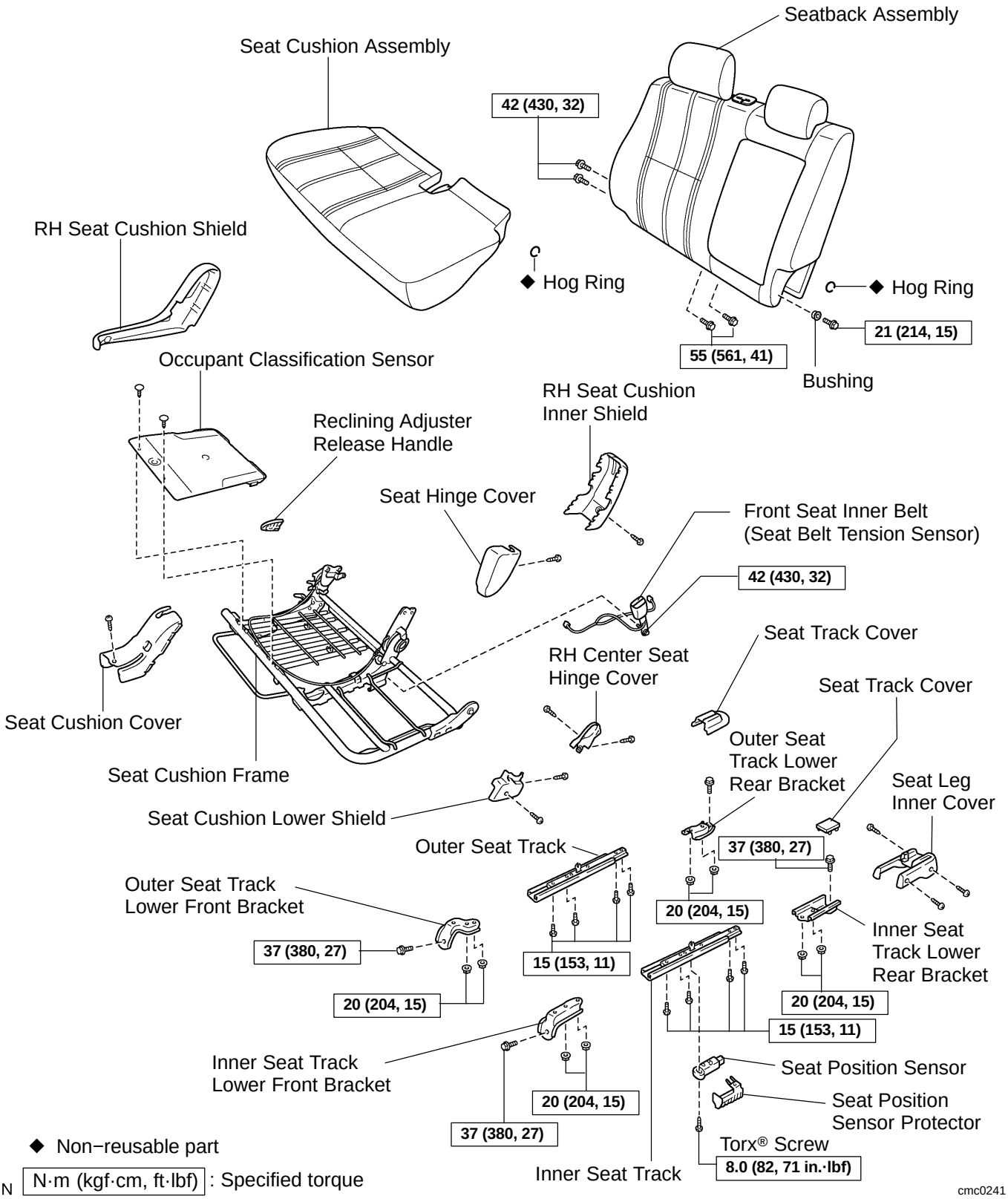

Bench Type:

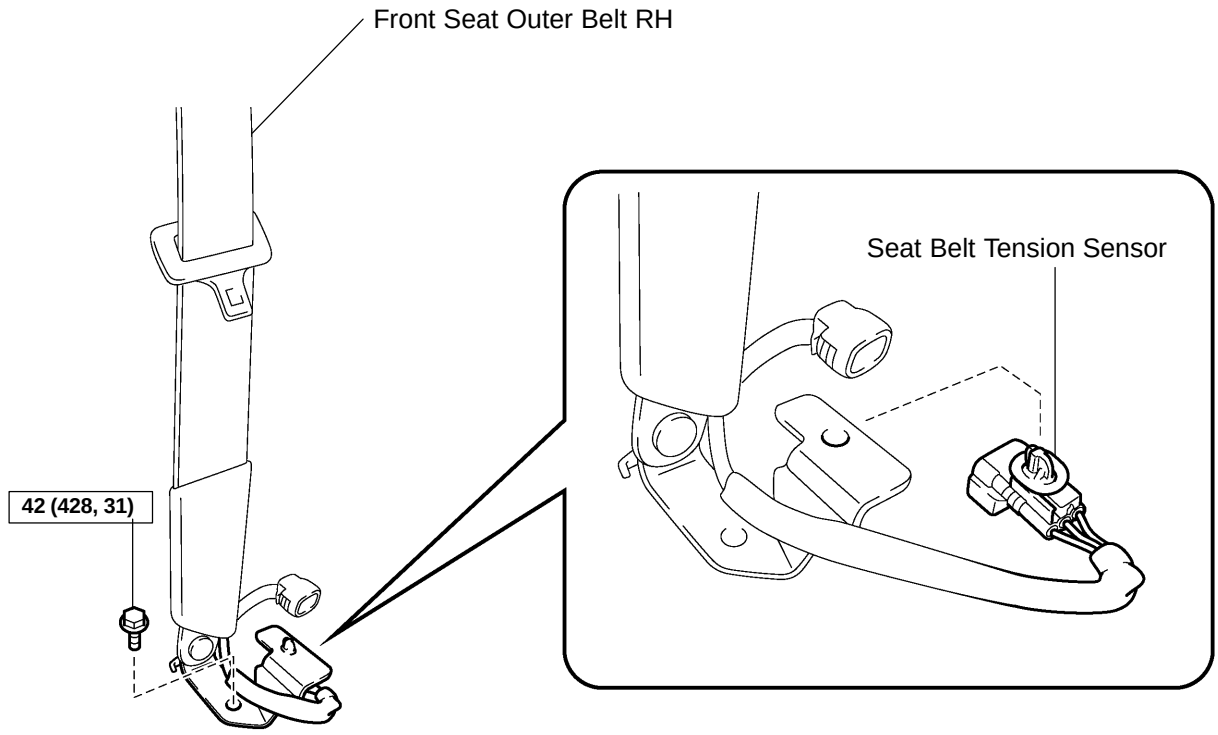

N·m (kgf·cm, ft·lbf) : Specified torque

cmc0246

RS0UV−08

REMOVAL

NOTICE:

- **If the wiring connector of the SRS is disconnected with the ignition switch in the ON position, DTCs will be recorded.**
- **Never use SRS parts from another vehicle. When replacing the parts, replace them with new ones.**
- **Never reuse a seat belt tension sensor if an airbag has previously deployed in a collision.**

1. PRECAUTION (SEE PAGE RS−1 AND RS−3)

2. DISCONNECT CABLE FROM NEGATIVE BATTERY TERMINAL

Wait for 90 seconds after disconnecting the cable to prevent the airbag working.

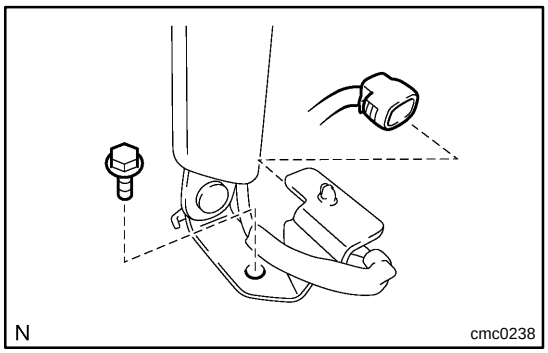

3. Bench type:
REMOVE FRONT SEAT OUTER BELT FLOOR ANCHOR RH (SEAT BELT TENSION SENSOR)

(a) Disconnect the connector from the seat belt tension sensor.

(b) Remove the bolt and the front seat outer belt RH floor anchor.

4. Split type (Passenger's Side):
REMOVE SEAT TRACK COVER (SEE PAGE BO−188)

5. 5.Split type (Passenger's Side):
REMOVE FRONT SEAT ASSEMBLY RH
(SEE PAGE BO−188)

6. Split type (Passenger's Side):
REMOVE SEAT LEG INNER COVER
(SEE PAGE BO−189)

7. Split type (Passenger's Side):
REMOVE RECLINING ADJUSTER RELEASE HANDLE
(SEE PAGE BO−189)

8. Split type (Passenger's Side):
REMOVE RH SEAT CUSHION SHIELD
(SEE PAGE BO−189)

9. Split type (Passenger's Side):
REMOVE SEAT CUSHION LOWER SHIELD
(SEE PAGE BO−189)

10. Split type (Passenger's Side):
REMOVE SEATBACK ASSEMBLY
(SEE PAGE BO−189)

11. Split type (Passenger's Side):
REMOVE SEAT POSITION SENSOR ASSEMBLY
(SEE PAGE BO−189)

12. **Split type (Passenger's Side):**
REMOVE RH CENTER SEAT HINGE COVER
(SEE PAGE BO−189)
13. **Split type (Passenger's Side):**
REMOVE RH SEAT CUSHION INNER SHIELD AND SEAT CUSHION COVER (SEE PAGE BO−189)
14. **Split type (Passenger's Side):**
REMOVE SEAT HINGE COVER (SEE PAGE BO−189)
15. **Split type (Passenger's Side):**
REMOVE OUTER SEAT TRACK LOWER FRONT AND REAR BRACKET (SEE PAGE BO−189)
16. **Split type (Passenger's Side):**
REMOVE INNER SEAT TRACK LOWER FRONT AND REAR BRACKET (SEE PAGE BO−189)
17. **Split type (Passenger's Side):**
REMOVE OUTER SEAT TRACK (SEE PAGE BO−189)
18. **Split type (Passenger's Side):**
REMOVE INNER SEAT TRACK (SEE PAGE BO−189)
19. **Split type (Passenger's Side):**
REMOVE SEAT CUSHION FRAME
(SEE PAGE BO−189)

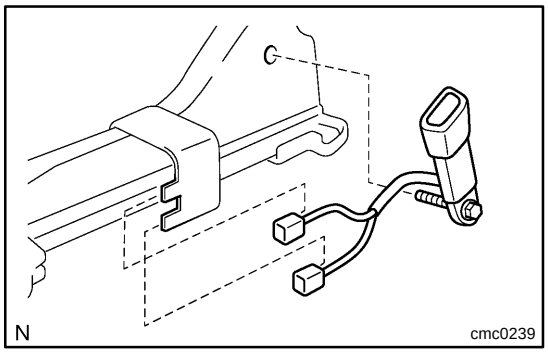

20. **Split type (Passenger's Side):**
REMOVE FRONT SEAT INNER BELT RH (SEAT BELT TENSION SENSOR)

(a) Disconnect the 2 connectors from the front seat inner belt RH.

(b) Disengage the harness clamps from the seat cushion frame.

(c) Remove the bolt and front seat inner belt RH (seat belt tension sensor).

RS0UX−07

REPLACEMENT

REPLACEMENT REQUIREMENTS

In the following cases, replace the seat belt tension sensor with a new one:

- The seat belt tension sensor has been found to be faulty in troubleshooting.
- The seat belt tension sensor has been dropped.

CAUTION:

For removal and installation procedures of the seat belt tension sensor, see page RS−167 and RS−170. Be sure to follow the correct procedure.

RS0UY−08

INSTALLATION

NOTICE:

- **Never use SRS parts from another vehicle. When replacing the parts, replace them with new ones.**
- **Never reuse a seat belt tension sensor involved in a collision when the airbag has deployed.**
- **If the seat belt tension sensor has been dropped, or there are any cracks, dents or other defects in the case, bracket or connector, replace it with a new one.**
- **When installing the seat belt tension sensor, be careful that the SRS wiring does not interfere with other parts and that it is not pinched between other parts.**
- **After installing, shake the seat belt tension sensor to check that there is no looseness.**

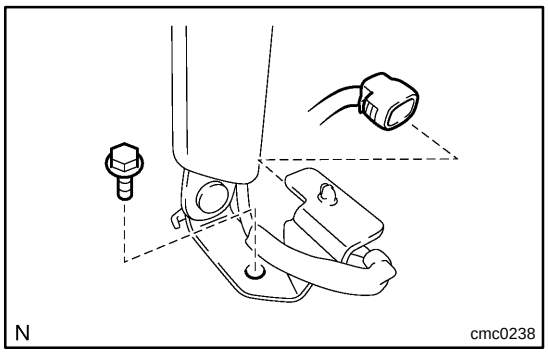

1. Bench type:
INSTALL FRONT SEAT OUTER BELT FLOOR ANCHOR RH (SEAT BELT TENSION SENSOR)

(a) Install the front seat outer belt RH floor anchor with the bolt.
Torque: 42 N·m (428 kgf·cm, 31 ft·lbf)

(b) Connect the connector to the seat belt tension sensor.

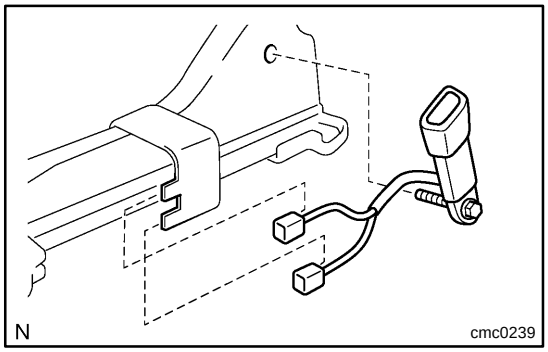

2. Split type (Passenger's Side):
INSTALL FRONT SEAT INNER BELT RH (SEAT BELT TENSION SENSOR)

(a) Install the front seat inner belt RH (seat belt tension sensor) with the bolt.
Torque: 42 N·m (428 kgf·cm, 31 ft·lbf)

(b) Connect the 2 connectors to the front seat inner belt RH.

(c) Engage the harness clamps to the seat cushion frame.

3. Split type (Passenger's Side):
INSTALL SEAT CUSHION FRAME
(SEE PAGE BO−195)

4. Split type (Passenger's Side):
INSTALL INNER SEAT TRACK (SEE PAGE BO−195)

5. Split type (Passenger's Side):
INSTALL OUTER SEAT TRACK (SEE PAGE BO−195)

6. Split type (Passenger's Side):
INSTALL INNER SEAT TRACK LOWER FRONT AND REAR BRACKET (SEE PAGE BO−195)

7. Split type (Passenger's Side):
INSTALL OUTER SEAT TRACK LOWER FRONT AND REAR BRACKET (SEE PAGE BO−195)
8. Split type (Passenger's Side):
INSTALL SEAT HINGE COVER (SEE PAGE BO−195)
9. Split type (Passenger's Side):
INSTALL RH SEAT CUSHION INNER SHIELD AND SEAT CUSHION COVER (SEE PAGE BO−195)
10. Split type (Passenger's Side):
INSTALL RH CENTER SEAT HINGE COVER (SEE PAGE BO−195)
11. Split type (Passenger's Side):
INSTALL SEAT POSITION SENSOR ASSEMBLY (SEE PAGE BO−195)
12. Split type (Passenger's Side):
INSTALL SEATBACK ASSEMBLY (SEE PAGE BO−195)
13. Split type (Passenger's Side):
INSTALL SEAT CUSHION LOWER SHIELD (SEE PAGE BO−195)
14. Split type (Passenger's Side):
INSTALL RH SEAT CUSHION SHIELD (SEE PAGE BO−195)
15. Split type (Passenger's Side):
INSTALL RECLINING ADJUSTER RELEASE HANDLE (SEE PAGE BO−195)
16. Split type (Passenger's Side):
INSTALL SEAT LEG INNER COVER (SEE PAGE BO−195)
17. Split type (Passenger's Side):
INSTALL FRONT SEAT ASSEMBLY RH (SEE PAGE BO−201)
18. Split type (Passenger's Side):
INSTALL SEAT TRACK COVER (SEE PAGE BO−201)
19. CONNECT CABLE TO NEGATIVE BATTERY TERMINAL
20. PERFORM ZERO POINT CALIBRATION AND SENSITIVITY CHECK (SEE PAGE DI−1829)
21. INSPECT SRS WARNING LIGHT (SEE PAGE DI−1839)

OCCUPANT CLASSIFICATION ECU (Separate Seat)

RS0UU−06

COMPONENTS

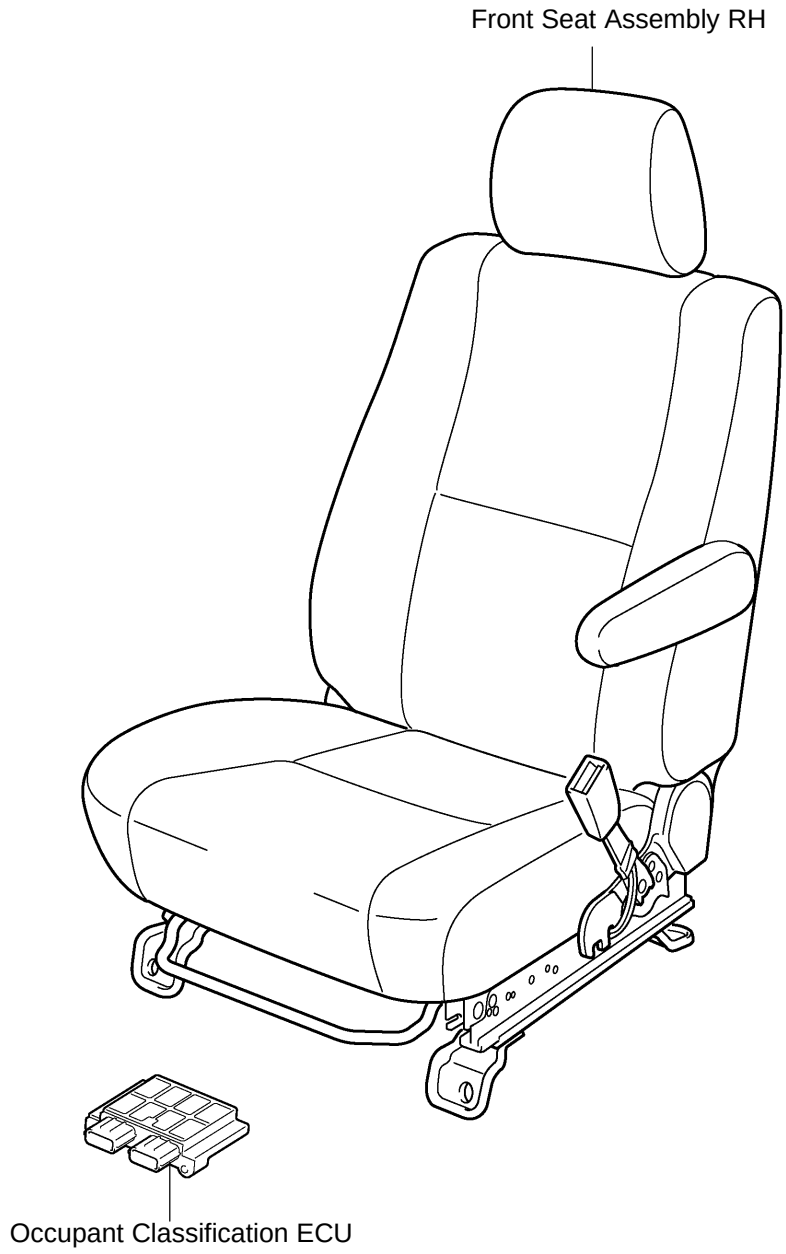

C

H23886

RS0UW−08

INSPECTION

1. VEHICLE NOT INVOLVED IN A COLLISION

Perform a diagnostic system check (see page DI−1851).

2. VEHICLE INVOLVED IN A COLLISION

(a) Perform a diagnostic system check (see page DI−1851).

(b) Even if the airbag was not deployed, perform a visual check for damage to the occupant classification ECU. If there are any defects mentioned below, replace the occupant classification ECU with a new one:

- Cracks, dents or chips in the case.
- Cracks or other damage to the connector.

CAUTION:

For removal and installation procedures of the occupant classification ECU, see page RS−125 and RS−128. Be sure to follow the correct procedure.

RS0UY−08

INSTALLATION

NOTICE:

- **Never use SRS parts from another vehicle. When replacing parts, replace them with new ones.**
- **Never reuse the occupant classification ECU involved in a collision when the airbag has deployed.**
- **If the occupant classification ECU has been dropped, or there are any cracks, dents or other defects in the case, bracket or connector, replace it with a new one.**
- **When installing the seat position sensor assembly center, be careful that the SRS wiring does not interfere with other parts and that it is not pinched between other parts.**

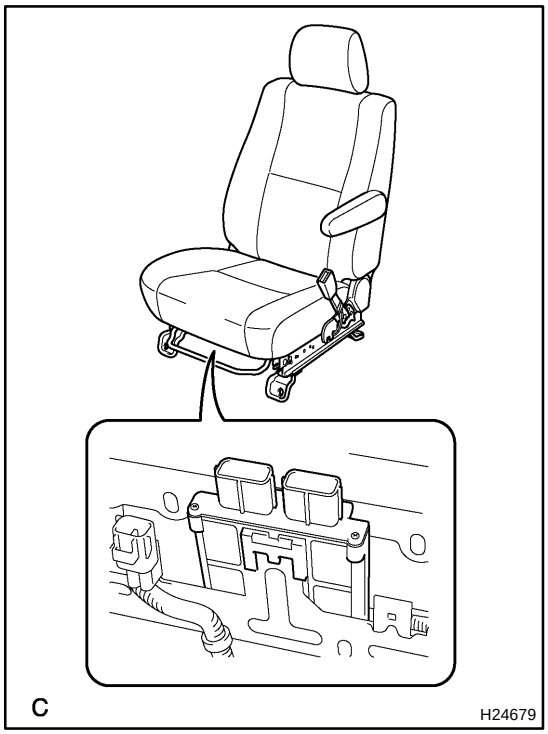

1. INSTALL OCCUPANT CLASSIFICATION ECU

(a) Install the occupant classification ECU.

(b) Connect the 2 connectors to the occupant classification ECU.

2. INSTALL FRONT SEAT ASSEMBLY RH (SEE PAGE BO−153)

3. CONNECT CABLE TO NEGATIVE BATTERY TERMINAL

4. INSPECT SRS WARNING LIGHT (SEE PAGE DI−1839)

RS0UV−08

REMOVAL

NOTICE:

- **If the wiring connector of the SRS is disconnected with the ignition switch in the ON position, DTCs will be recorded.**
- **Never use SRS parts from another vehicle. When replacing the parts, replace them with new ones.**
- **Never reuse an occupant classification ECU if the airbag has previously deployed in a collision.**

1. PRECAUTION (SEE PAGE RS−1 AND RS−3)

2. DISCONNECT CABLE FROM NEGATIVE BATTERY TERMINAL

Wait for 90 seconds after disconnecting the cable to prevent the airbag working.

3. REMOVE FRONT SEAT ASSEMBLY RH (SEE PAGE BO−141)

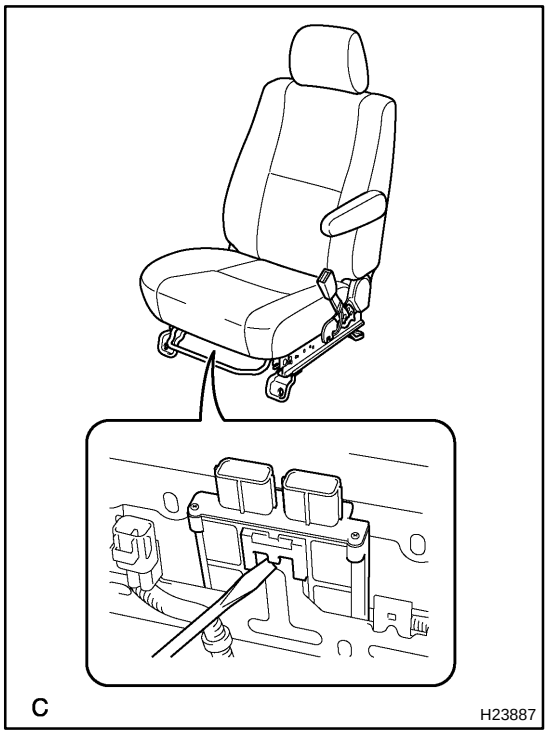

4. REMOVE OCCUPANT CLASSIFICATION ECU

(a) Disconnect the 2 connectors from the occupant classification ECU.

(b) Using a screwdriver, remove the occupant classification ECU.

RS0UX−07

REPLACEMENT

REPLACEMENT REQUIREMENTS

In the following cases, replace the occupant classification ECU with a new one.

- The occupant classification ECU has been found to be faulty in troubleshooting.
- The occupant classification ECU has been dropped.

CAUTION:

For removal and installation procedures of the occupant classification ECU, see page RS−125 and RS−128. Be sure to follow the correct procedure.

PASSENGER AIRBAG MANUAL ON−OFF SWITCH

RS12Y−01

COMPONENTS

Standard Cab:
Access Cab (w/o Large Type Console Box):

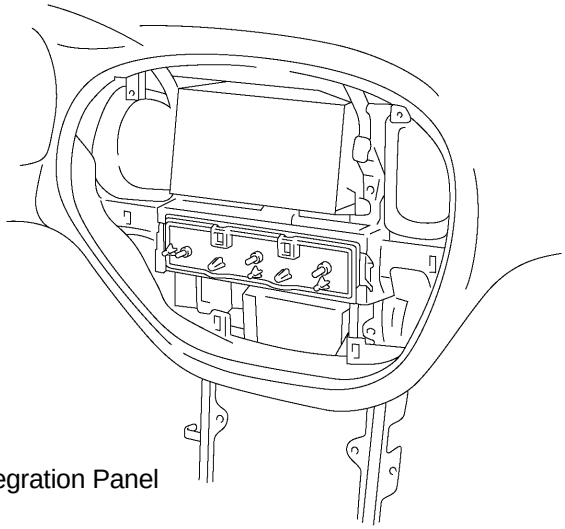

Center Cluster Integration Panel

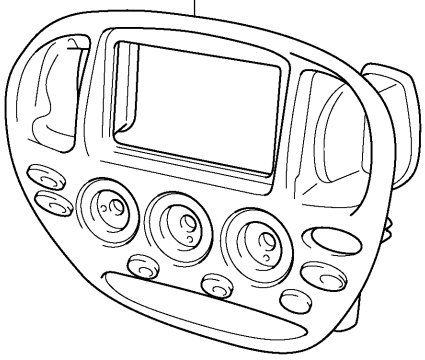

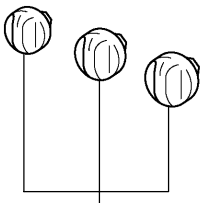

Knob Sub Assembly

Lower Center Cover

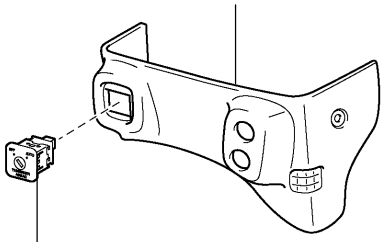

Passenger Airbag Manual AUTO−OFF Switch

C

H23888

Access Cab (w/ Large Type Console Box):

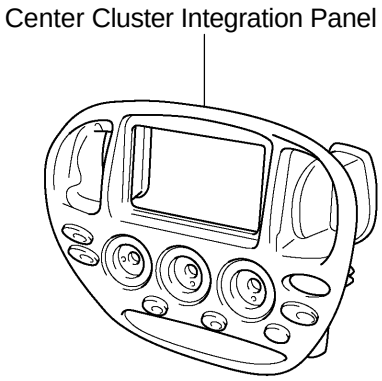

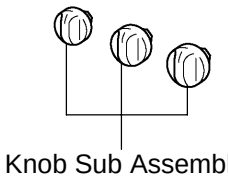

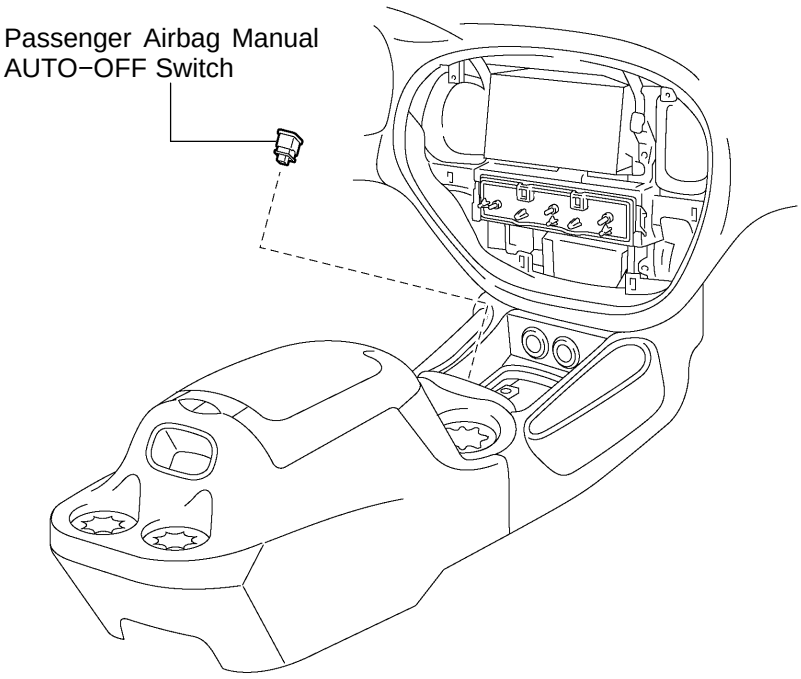

C

H23889

RS12Z−01

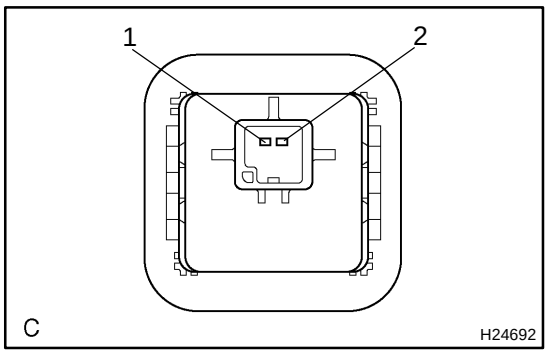

INSPECTION

1. INSPECT PASSENGER AIRBAG MANUAL AUTO−OFF SWITCH

Measure the resistance between terminals 1 and 2 of the passenger airbag manual AUTO−OFF switch.

Result:

Switch Condition	Tester Connection	Specified Condition
ON	1 − 2	320 to 480 Ω
OFF	1 − 2	80 to 120 Ω

If the result is not as specified, replace the switch.

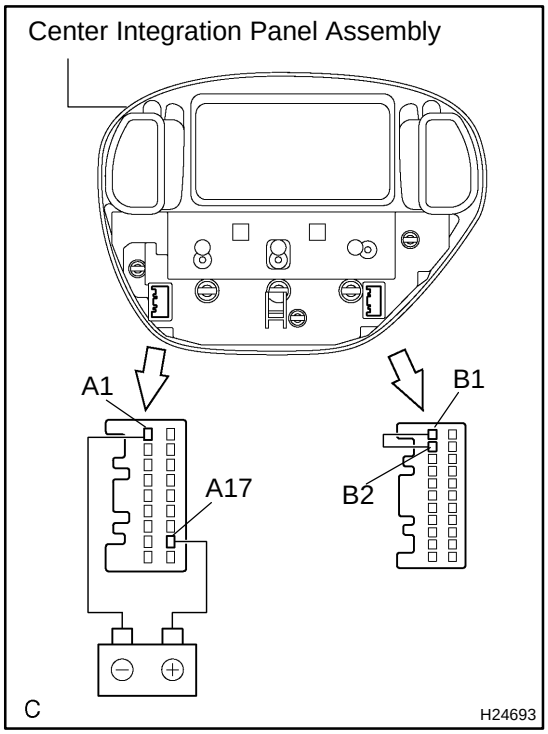

2. INSPECT PASSENGER AIRBAG ON/OFF INDICATOR OPERATION

(a) Remove the center cluster integration panel assembly (see page BO−111).
(b) Using a service wire, connect terminals B1 and B2.
(c) Connect the battery's positive (+) lead from the battery to terminal A17 and the negative (−) lead to terminal A1.
(d) Check that the indicator ON light illuminates.

If it does not illuminate, replace the center cluster integration panel assembly.

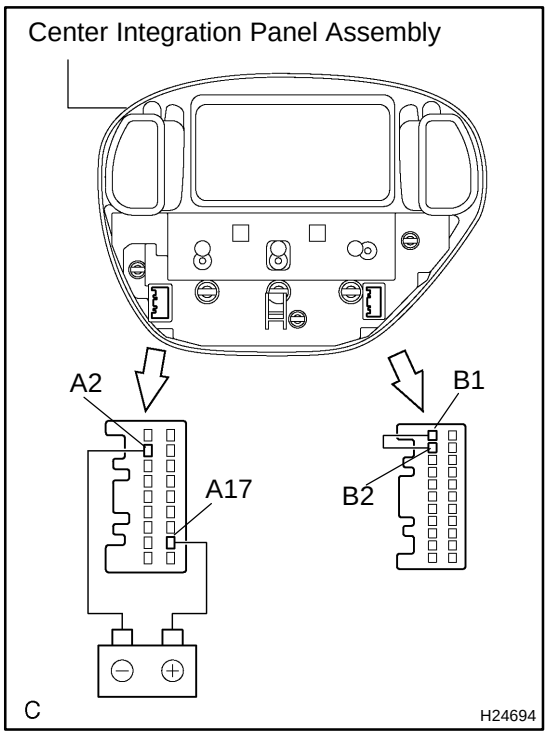

(e) Using a service wire, connect terminals B1 and B2.
(f) Connect the battery's positive (+) lead from the battery to terminal A17 and the negative (−) lead to terminal A2.
(g) Check that the indicator OFF light illuminates.

If it does not illuminate, replace the center cluster integration panel assembly.

RS10S−02

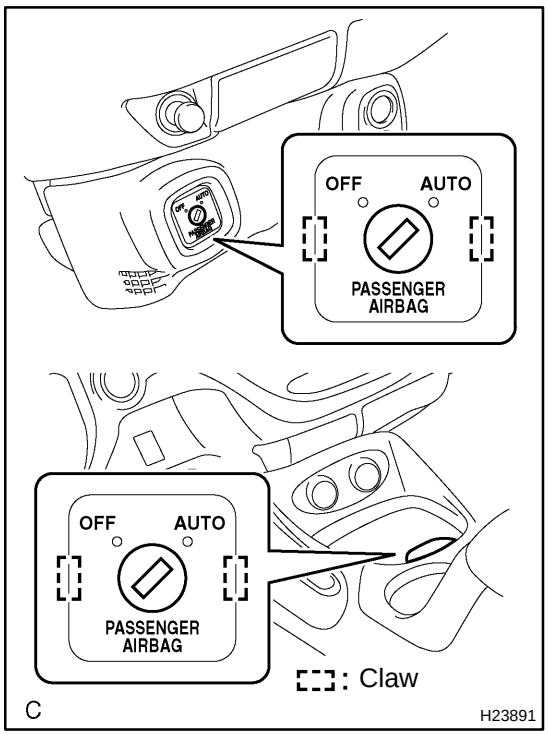

INSTALLATION

1. INSTALL PASSENGER AIRBAG MANUAL AUTO−OFF SWITCH

(a) Connect the connector.

(b) Install the passenger airbag manual AUTO−OFF switch.

2. CONNECT CABLE TO NEGATIVE BATTERY TERMINAL

3. INSPECT SRS WARNING LIGHT (SEE PAGE DI−1839)

RS10P−02

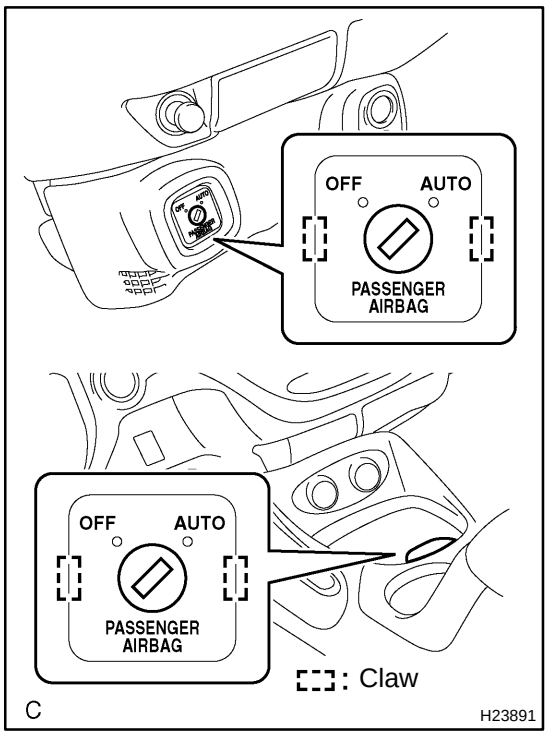

REMOVAL

1. PRECAUTION (SEE PAGE RS−1 AND RS−3)

2. DISCONNECT CABLE FROM NEGATIVE BATTERY TERMINAL

Wait for 90 seconds after disconnecting the cable to prevent the airbag working.

3. REMOVE PASSENGER AIRBAG MANUAL AUTO−OFF SWITCH

(a) Using a screwdriver, release the 2 claws and remove the passenger airbag manual AUTO−OFF switch.

HINT:

Tape up the screwdriver tip before use.

(b) Disconnect the connector.

RSCA OFF SWITCH

COMPONENTS

RS130−01

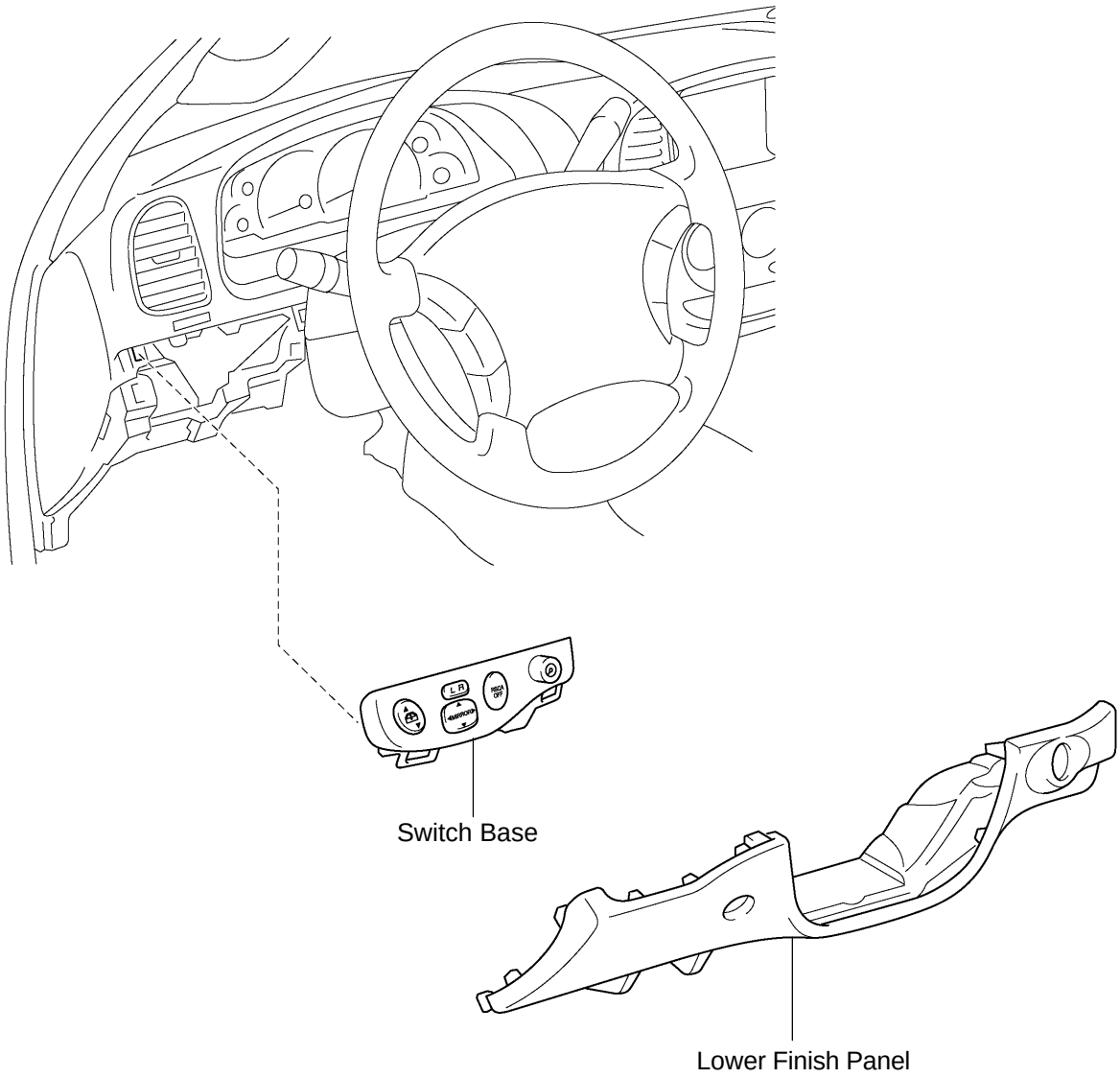

C

H23892

RS132−01

INSPECTION

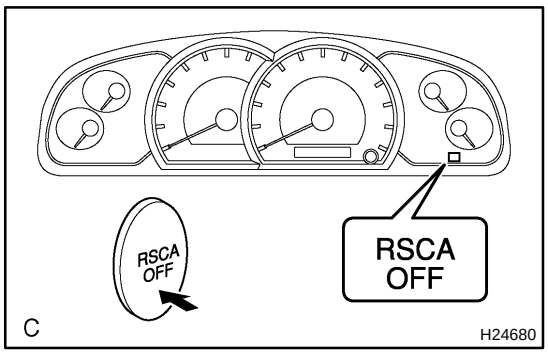

1. INSPECT RSCA OFF INDICATOR LIGHT

(a) Turn the ignition switch to the ON position.

(b) Check that the RSCA OFF indicator light goes off after it comes on for 3 seconds.

(c) Check that the RSCA OFF indicator light comes on after pressing the RSCA OFF switch for approx. 2 seconds.

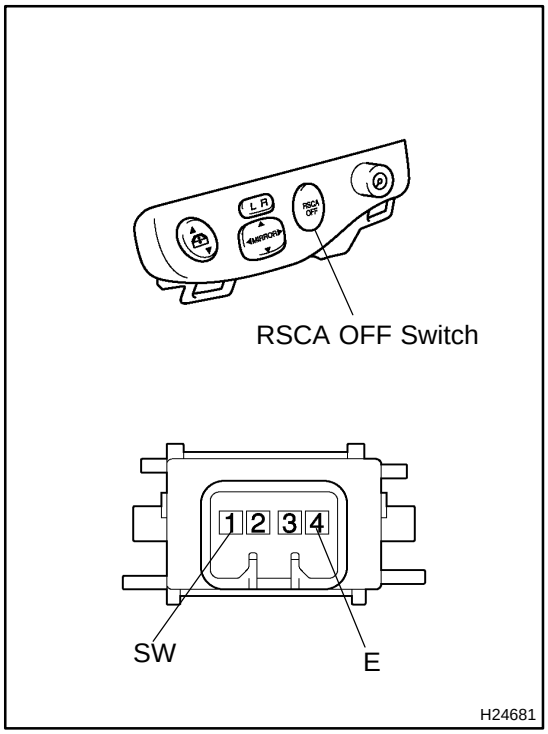

2. INSPECT RSCA OFF SWITCH CONTINUITY

(a) Inspect the continuity between each terminal.

Switch Position	Tester Connection	Specified Condition
OFF	SW (1) ↔ E (4)	No Continuity
Hold ON	SW (1) ↔ E (4)	Continuity

If continuity is not as specified, replace the RSCA OFF switch.

RS133−01

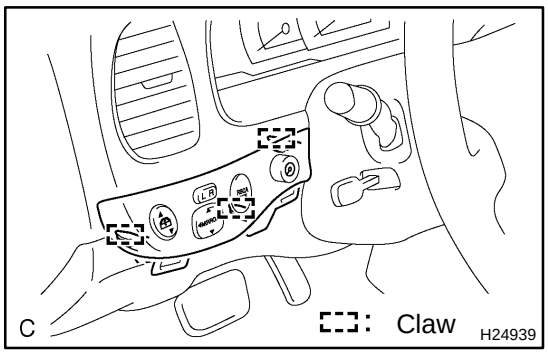

INSTALLATION

1. INSTALL SWITCH BASE

(a) Connect the connectors.

(b) Install the switch base.

2. INSTALL LOWER FINISH PANEL (SEE PAGE BO−120)

3. CONNECT CABLE TO NEGATIVE BATTERY TERMINAL

4. INSPECT SRS WARNING LIGHT (SEE PAGE DI−1839)

RS131−01

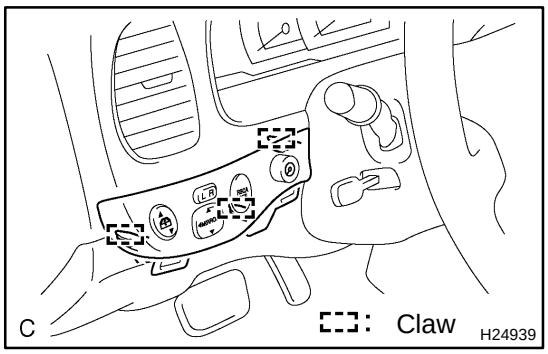

REMOVAL

1. PRECAUTION (SEE PAGE RS−1 AND RS−3)

2. DISCONNECT CABLE FROM NEGATIVE BATTERY TERMINAL

Wait for 90 seconds after disconnecting the cable to prevent the airbag working.

3. REMOVE LOWER FINISH PANEL (SEE PAGE BO−111)

4. REMOVE SWITCH BASE

(a) Using a screwdriver, remove the 3 claws and switch base.

HINT:

Tape up the screwdriver tip before use.

(b) Disconnect the connectors.

SIDE AIRBAG ASSEMBLY (Manual Adjuster Type)

RS12C−01

COMPONENTS

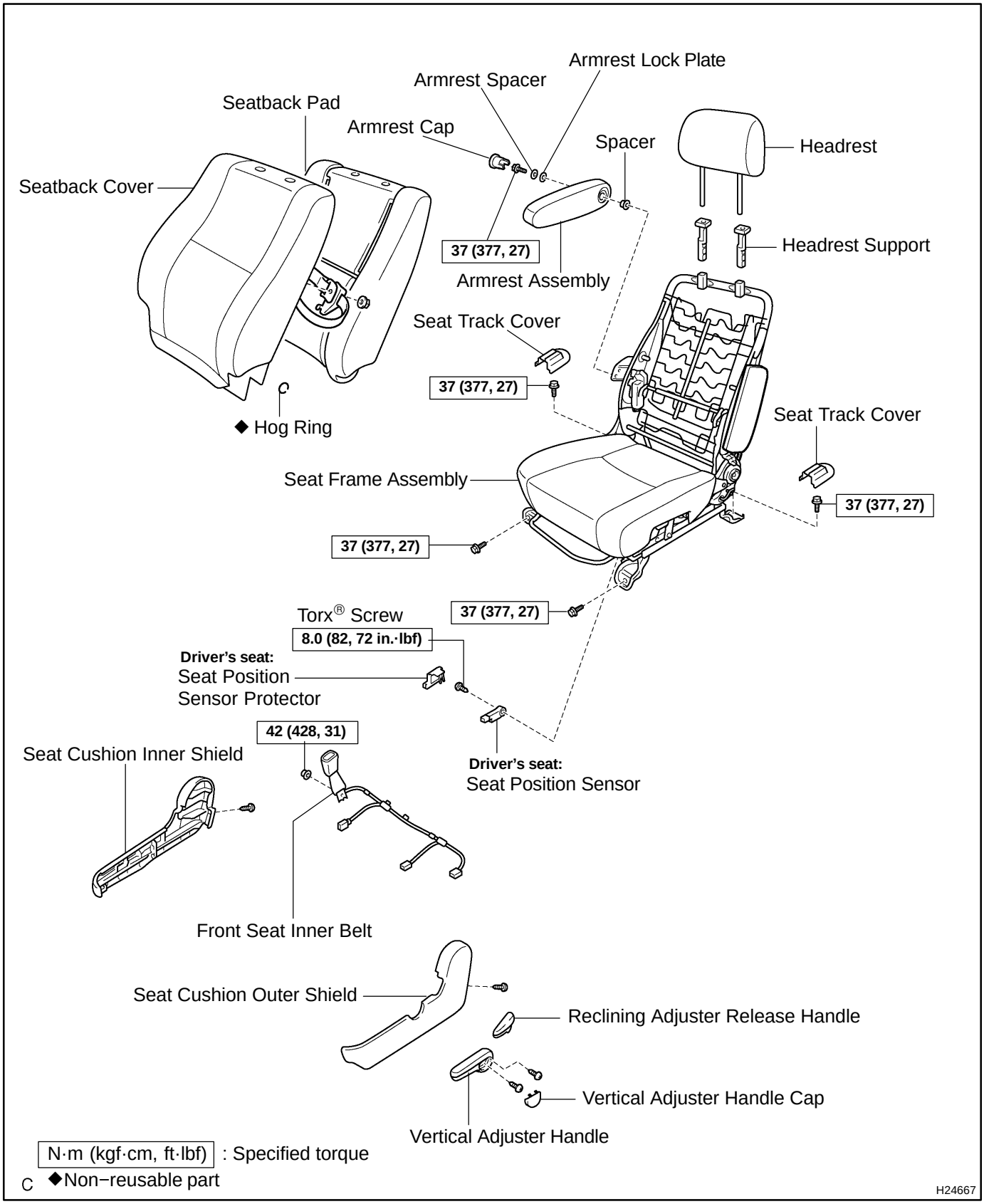

RS12F−01

DISPOSAL

See page RS−53.

RS12E−01

INSPECTION

1. VEHICLE NOT INVOLVED IN A COLLISION

(a) Perform a diagnostic system check (see page DI−1851).

(b) With the front seat airbag assy installed on the vehicle, perform a visual check. If there are any defects as mentioned below, replace the front seatback assy with a new one:

Cuts, minute cracks or marked discoloration on the front seatback assy around the front seat airbag assy.

2. VEHICLE INVOLVED IN A COLLISION AND AIRBAG IS NOT DEPLOYED

(a) Perform a diagnostic system check (see page DI−1851).

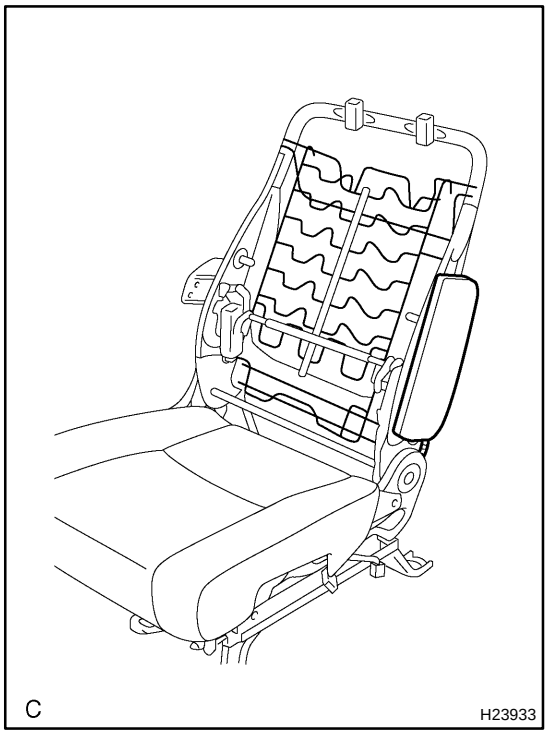

(b) Perform a visual check which includes the following items with the seatback assembly removed from the vehicle.

- Cuts, tears and cracks on the side airbag assembly.
- Cuts and cracks in the wire harness, and chipping in the connectors.

CAUTION:

For removal and installation of the front seatback assembly, see page RS−64 and RS−70. Be sure to follow the correct procedure.

RS12H−01

INSTALLATION

HINT:

- Use the same procedures for the RH side and LH side.
- The procedures listed below are for the LH side.

NOTICE:

- **If the side airbag assembly has been dropped, or there are cracks, dents or other defects in the case or connector, replace the side airbag assembly with a new one.**
- **When installing the side airbag assembly, take care that it is not pinched between other parts.**
- **Never use airbag parts from another vehicle. When replacing parts, replace them with new ones.**

1. INSTALL SEATBACK COVER AND PAD

(a) Install the seatback cover and pad to the seat frame assembly.

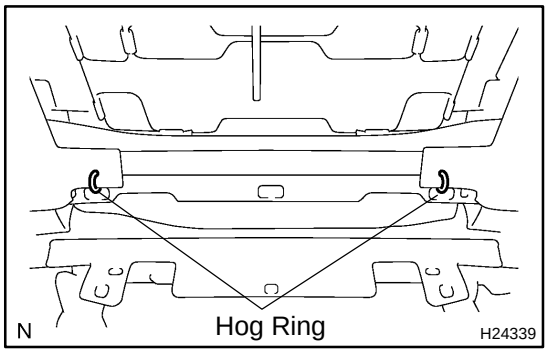

(b) Install the seatback cover tubes with the hog rings to the seat frame assembly.

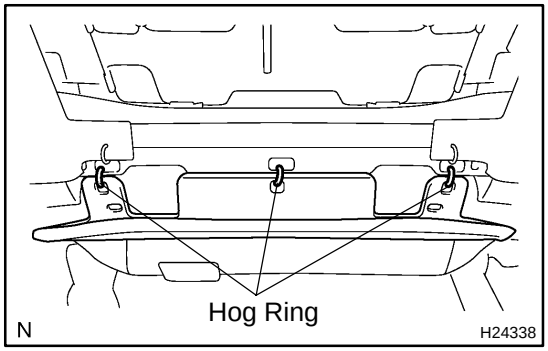

(c) Install the hog rings to the seat frame assembly.

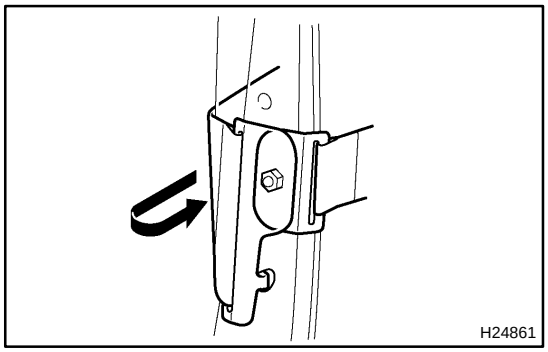

(d) w/ Side airbag:
Connect the seatback cover bracket with the nut to the seat frame assembly.
Torque: 5.5 N·m (56 kgf·cm, 49 in.·lbf)

(e) Close the fastener.

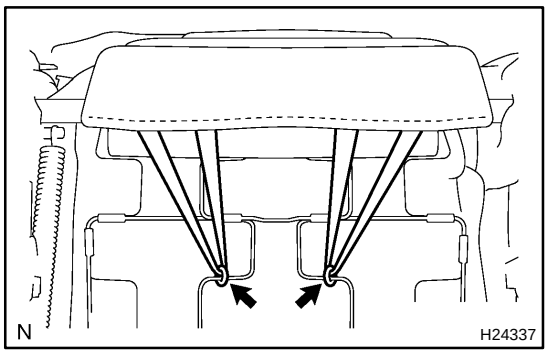

(f) Install the seatback cover belt to the seat frame assembly.

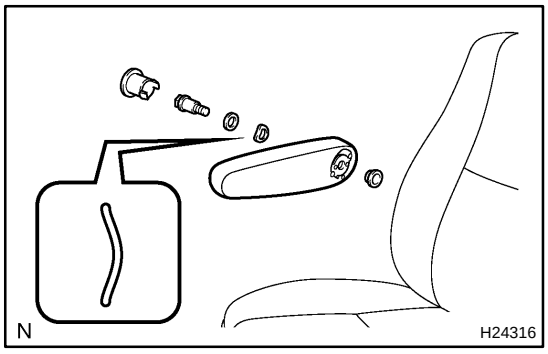

2. INSTALL ARMREST ASSEMBLY

(a) Install the spacer to the armrest assembly.

(b) Install the armrest assembly, armrest lock plate and armrest spacer with the bolt.

Torque: 37 N·m (377 kgf·cm, 27 ft·lbf)

HINT:

Install the armrest lock plate as shown in the illustration.

(c) Install the armrest cap.

3. INSTALL FRONT SEAT INNER BELT

(a) Install the front seat inner belt with the nut.

Torque: 42 N·m (428 kgf·cm, 31 ft·lbf)

(b) Connect the connectors and wire harness clamps.

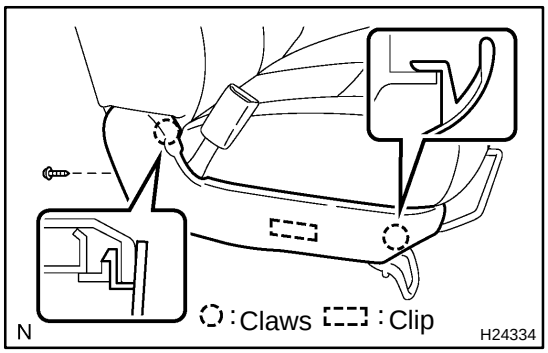

4. INSTALL SEAT CUSHION INNER SHIELD

Install the seat cushion inner shield with the screw.

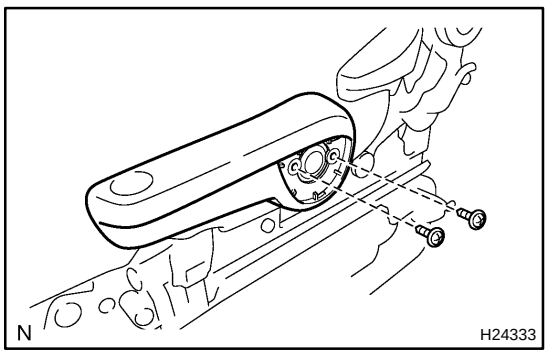

5. INSTALL VERTICAL ADJUSTER HANDLE

(a) Install the vertical adjuster handle with the 2 screws.

(b) Install the vertical adjuster handle cap.

6. INSTALL RECLINING ADJUSTER RELEASE HANDLE

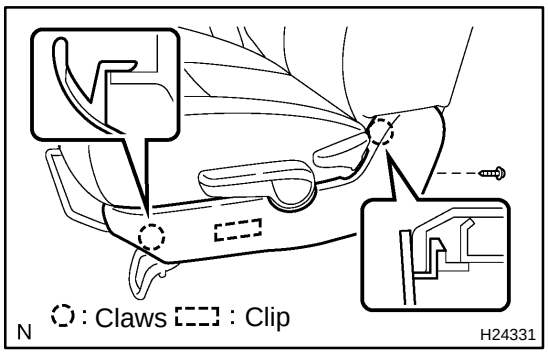

7. INSTALL SEAT CUSHION OUTER SHIELD

Install the seat cushion outer shield with the screw.

8. INSTALL HEADREST

9. INSTALL FRONT SEAT

Mount the front seat to the vehicle.

NOTICE:

Be careful not to damage the body.

(a) Connect the connectors.

(b) Slide the front seat to the rearmost position.

(c) Temporarily tighten the bolts on the front side, starting from the bolt on the inner side, and fully tighten them.
Torque: 37 N·m (377 kgf·cm, 27 ft·lbf)

(d) Slide the front seat to the most front position.

(e) Temporarily tighten the bolts on the rear side, starting from the bolt on the inner side, and fully tighten them.
Torque: 37 N·m (377 kgf·cm, 27 ft·lbf)

10. INSTALL SEAT TRACK COVERS

11. CONNECT CABLE TO NEGATIVE BATTERY TERMINAL

12. INSPECT SRS WARNING LIGHT (SEE PAGE DI−1839)

RS12D−01

REMOVAL

HINT:

- Use the same procedures for the RH side and LH side.
- The procedures listed below are for the LH side.

NOTICE:

- **If the wiring connector of the SRS is disconnected and the ignition switch is in the ACC or ON position, DTCs will be recorded.**
- **Never use airbag parts from another vehicle. When replacing parts, replace them with new ones.**

1. PRECAUTION (SEE PAGE RS−1 AND RS−3)

2. DISCONNECT CABLE FROM NEGATIVE BATTERY TERMINAL

Wait for 90 seconds after disconnecting the cable to prevent the airbag working.

3. REMOVE SEAT TRACK COVERS

Using a screwdriver, remove the seat track covers.

HINT:

Tape the screwdriver tip before use.

4. REMOVE FRONT SEAT

(a) Remove the 4 bolts.

(b) Disconnect the connectors.

(c) w/ Side airbag:
Disconnect the airbag connector.

(d) Remove the front seat.

NOTICE:

Be careful not to damage the body.

5. REMOVE HEADREST

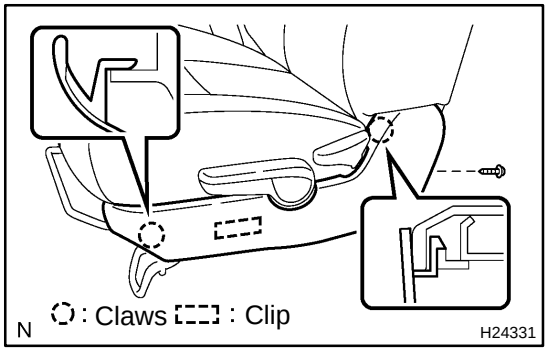

6. REMOVE SEAT CUSHION OUTER SHIELD

(a) Remove the screw from the seat cushion outer shield.

(b) Using a screwdriver, remove the seat cushion outer shield.

HINT:

Tape the screwdriver tip before use.

7. REMOVE RECLINING ADJUSTER RELEASE HANDLE

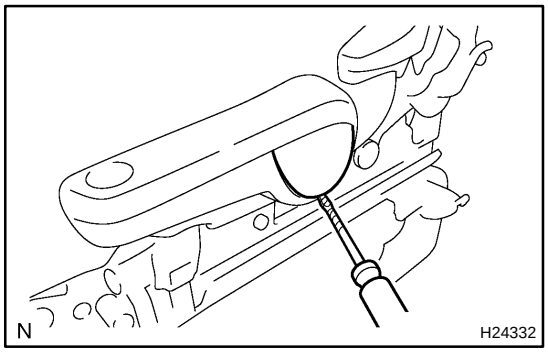

8. REMOVE VERTICAL ADJUSTER HANDLE

(a) Using a screwdriver, remove the vertical adjuster handle cap.

HINT:

Tape the screwdriver tip before use.

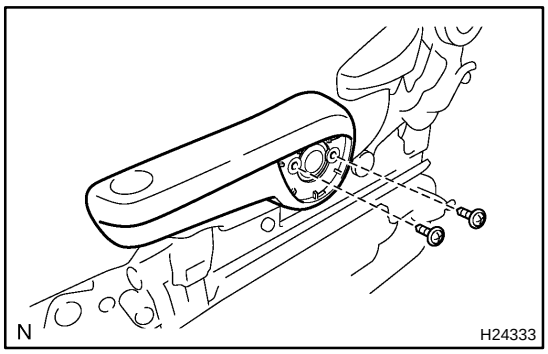

(b) Remove the 2 screws and vertical adjuster handle.

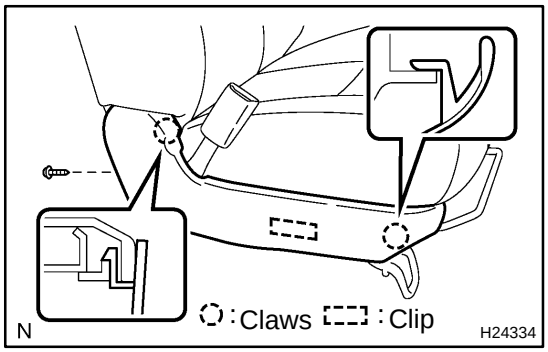

9. REMOVE SEAT CUSHION INNER SHIELD

(a) Remove the screw from the seat cushion inner shield.

(b) Using a screwdriver, remove the seat cushion inner shield.

HINT:

Tape the screwdriver tip before use.

10. REMOVE FRONT SEAT INNER BELT

(a) Disconnect the wire harness clamps and connectors.

(b) Remove the nut and front seat inner belt.

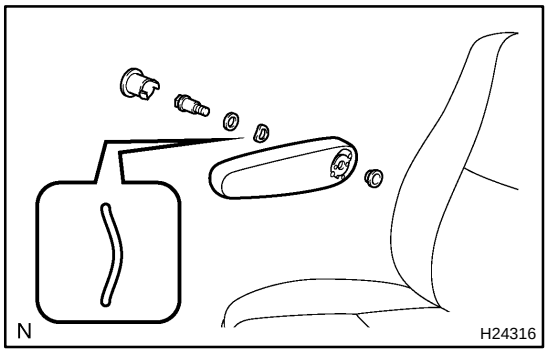

11. REMOVE ARMREST ASSEMBLY

(a) Using a screwdriver, remove the armrest cap.

(b) Remove the bolt, armrest spacer, armrest lock plate and armrest assembly.

(c) Remove the spacer from the armrest assembly.

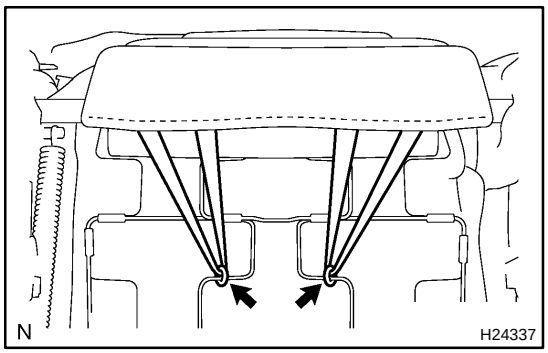

12. REMOVE SEATBACK COVER AND PAD

(a) Remove the seatback cover lower part from the seat frame assembly.

(b) Open the fastener.

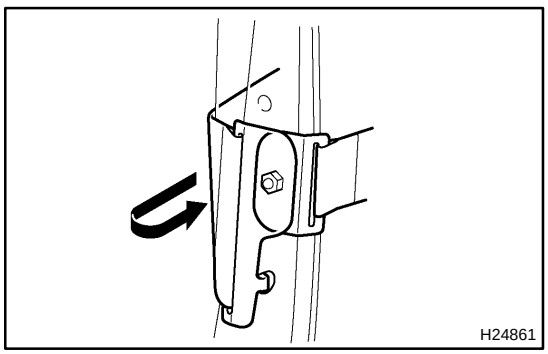

(c) w/ Side airbag:

Remove the nut and disconnect the seatback cover bracket from the seat frame assembly.

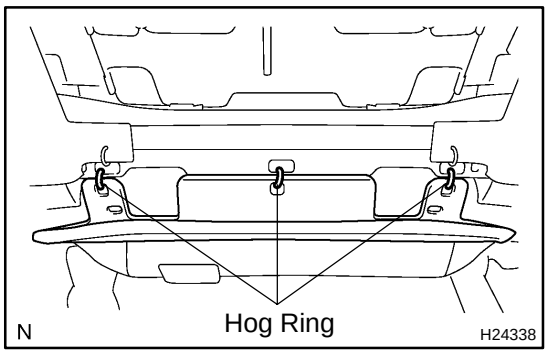

(d) Remove the hog rings from the seat frame assembly.

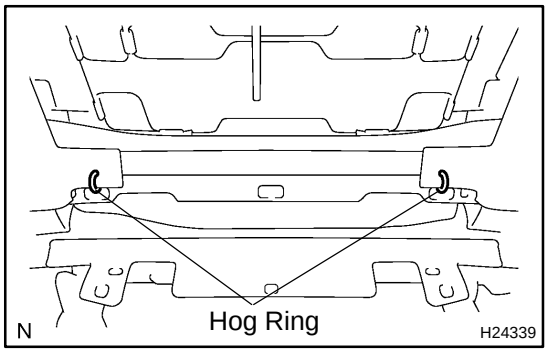

(e) Remove the hog rings from the seat frame assembly.

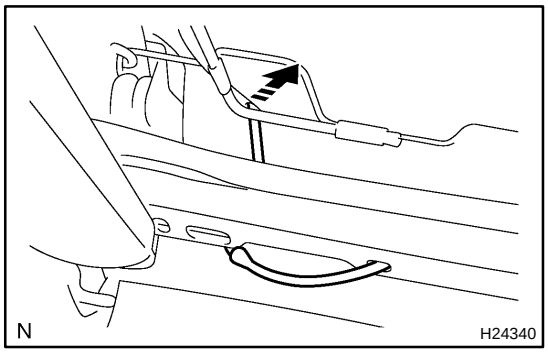

(f) Remove the hog rings shown in the illustration from the seat frame assembly.
(g) Remove the seatback cover and pad from the seat frame assembly.

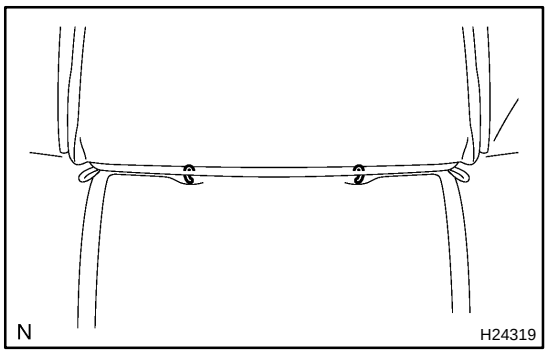

13. REMOVE SEATBACK COVER

(a) Turn up the seatback cover and remove the hog rings.
(b) Remove the 2 headrest supports.
(c) Remove the seatback cover from the seatback pad.

RS12G−01

REPLACEMENT

REPLACEMENT REQUIREMENTS

In the following cases, replace the seat frame assembly or seatback cover with a new one.

Case	Replacing part
The side airbag has been deployed.	Seat assembly
The side airbag assembly has been found to be faulty in troubleshooting.	Seat frame assembly
The side airbag assembly has been found to have cuts while checking items (see page RS−67).	Seat frame assembly
The seatback cover has been found to have cuts while checking items (see page RS−67).	Seatback cover
The side airbag assembly has been found to be faulty while checking items (see page RS−67).	Seat frame assembly
The seatback cover has been found to be faulty while checking items (see page RS−67).	Seatback cover
The front seat adjuster LH has been dropped.	Seat frame assembly

CAUTION:

For removal and installation procedures of the seat frame assembly, see page RS−64 and RS−70. Be sure to follow the correct procedure.

SIDE AIRBAG ASSEMBLY (Power Adjuster Type)

RS126−01

COMPONENTS

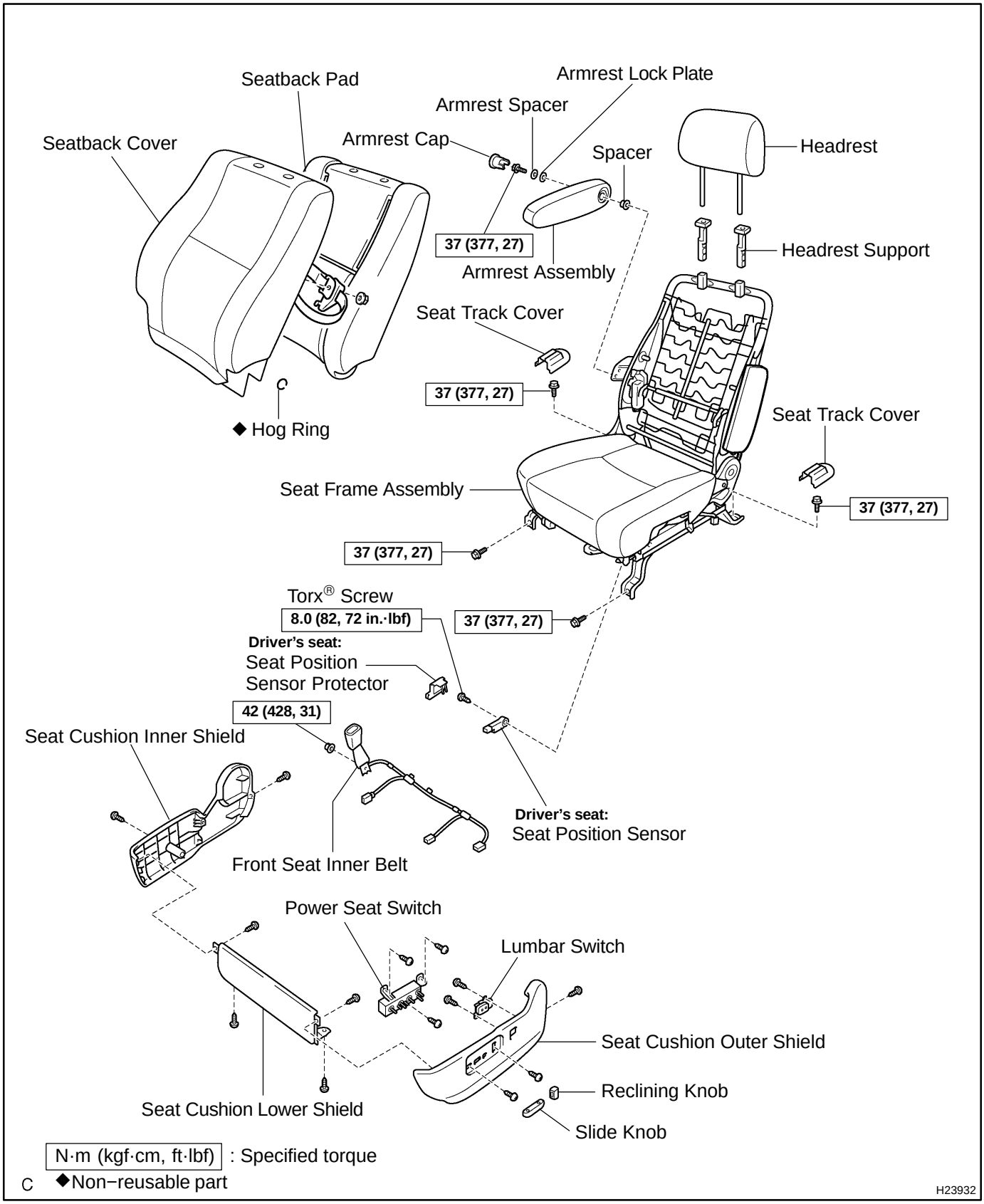

RS129−01

DISPOSAL

HINT:

- Use the same procedures for the RH side and LH side.
- The procedures listed below are for the LH side.
- When scrapping a vehicle equipped with the SRS or disposing of the front seat airbag assy LH, be sure to deploy the airbag first in accordance with the procedure described below. If any abnormality occurs with the airbag deployment, contact the SERVICE DEPT. of TOYOTA MOTOR SALES, U.S.A., INC.

CAUTION:

- **Never dispose of a front seat airbag assembly that has an undeployed airbag.**
- **The airbag produces an exploding sound when it is deployed, so perform the operation outdoors and where it will not create a nuisance to nearby residents.**

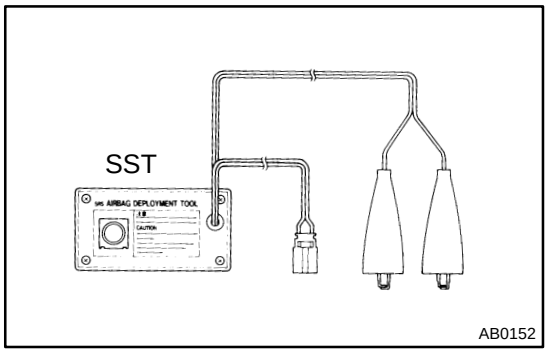

- **When deploying the airbag, always use the specified SST (SRS Airbag Deployment Tool). Perform the operation in a place away from electrical noise.**
- **When deploying the airbag, perform the operation at least 10 m (33 ft) away from the front seat airbag assembly.**
- **The front seat airbag assembly becomes extremely hot when the airbag is deployed, so do not touch it for at least 30 minutes after deployment.**
- **Use gloves and safety glasses when handling a front seat airbag assembly with a deployed airbag.**
- **Always wash your hands with water after completing the operation.**
- **Do not apply water, etc. to a front seat airbag assembly with a deployed airbag.**

HINT:

Prepare a battery as the power source to deploy the airbag.

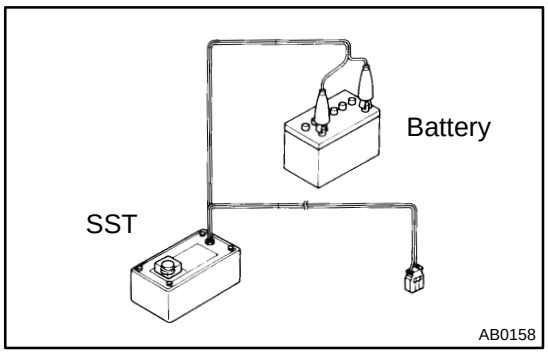

1. AIRBAG DEPLOYMENT WHEN SCRAPPING VEHICLE

(a) Check the function of the SST (see step 1−(a) on page RS−25).
SST 09082−00700

(b) Precaution (see page RS−1 and RS−3).

(c) Disconnect the battery negative terminal.

Wait for 90 seconds after disconnecting the cable to prevent the airbag working.

(d) Remove the 4 bolts from the front seat assy (see page RS−49 (power adjuster type), RS−64 (manual sdjuster type) and RS−74 (passenger side of split type)).

HINT:
Keep the front seat assy LH in the cabin.

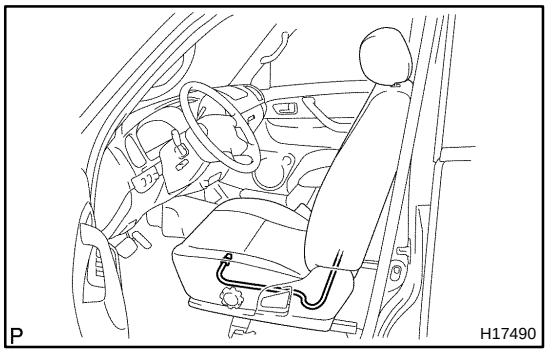

(e) Disconnect the connector (yellow colored one) from the front seat airbag assy LH.

NOTICE:
When handling the airbag connector, take care not to damage the airbag wire harness.

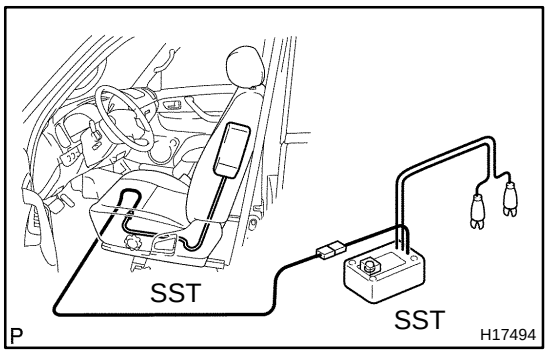

(f) Install the SST.

(1) Connect the connectors of the SST to the airbag connector.
SST 09082−00700, 09082−00750

NOTICE:
To avoid damaging the SST connector and wire harness, do not lock the secondary lock of the twin lock.

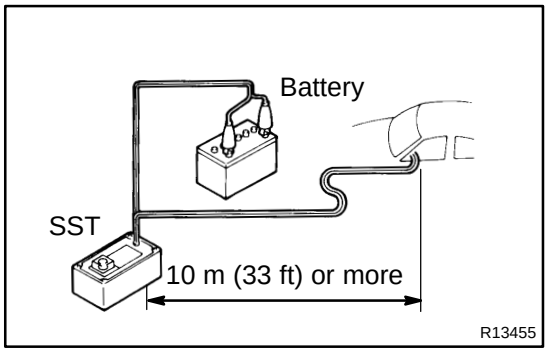

(2) Move the SST at least 10 m (33 ft) away from the vehicle side window.

(3) Maintaining enough clearance for the SST wire harness in the front side window, close all doors and windows of the vehicle.

NOTICE:
Take care not to damage the SST wire harness.

(4) Connect the red clip of the SST to the battery positive (+) terminal and the black clip to the battery negative (−) terminal.

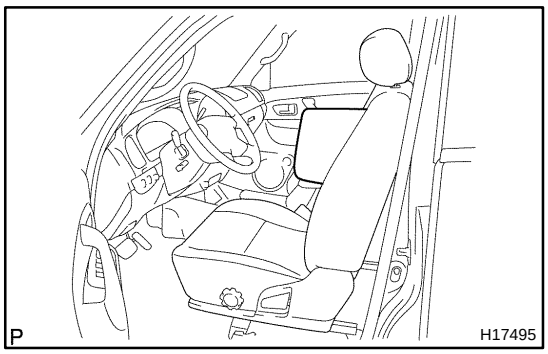

(g) Deploy the airbag.
(1) Check that no one is inside the vehicle or within a 10 m (33 ft) radius of the vehicle.
(2) Press the SST activation switch and deploy the airbag.

CAUTION:
- **When deploying the airbag, make sure that no one is near the vehicle.**
- **The front seat airbag assembly becomes extremely hot when the airbag is deployed, so do not touch it for at least 30 minutes after deployment.**
- **Use gloves and safety glasses when handling a front seat airbag assembly with a deployed airbag.**
- **Do not apply water, etc. to a front seat airbag assembly with a deployed airbag.**
- **Always wash your hands with water after completing the operation.**

HINT:
The airbag deploys as the LED of the SST activation switch comes on.

2. DEPLOYMENT WHEN DISPOSING OF SIDE AIRBAG ASSEMBLY

NOTICE:
- **When disposing of the side airbag assembly, never use the customer's vehicle to deploy the airbag.**
- **Be sure to follow the procedure given below when deploying the airbag.**

HINT:
Prepare a battery as the power source to deploy the airbag.

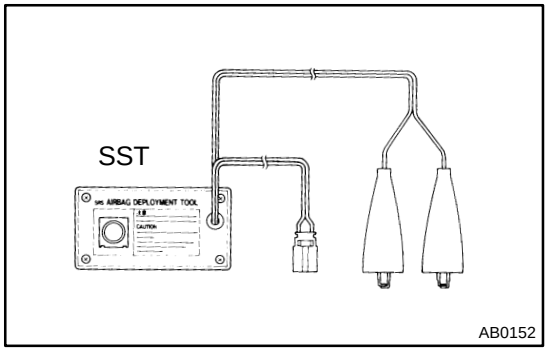

(a) Check the function of the SST (see step 1−(a)).
(b) Remove the front seat airbag assembly (see page RS−49 (power adjuster type), RS−64 (manual sdjuster type) and RS−74 (passenger side of split type)).
(c) Remove the seatback assembly (see page RS−49 (power adjuster type), RS−64 (manual sdjuster type) and RS−74 (passenger side of split type)).

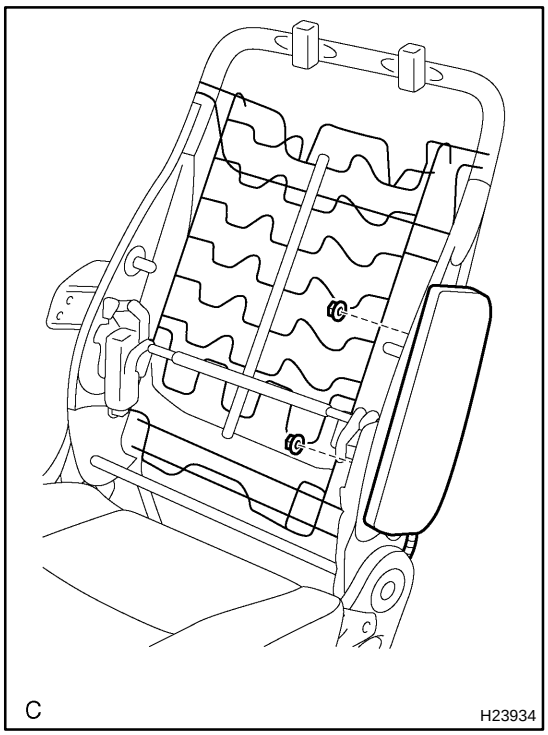

(d) Remove the 2 nuts and side airbag assembly from the seatback assembly.

CAUTION:

- **When removing the front seat airbag assembly, work must be started 90 seconds after the ignition switch is turned to the "LOCK" position and the negative (−) terminal cable is disconnected from the battery.**
- **When storing the front passenger airbag assembly, keep the airbag deployment side facing upward.**

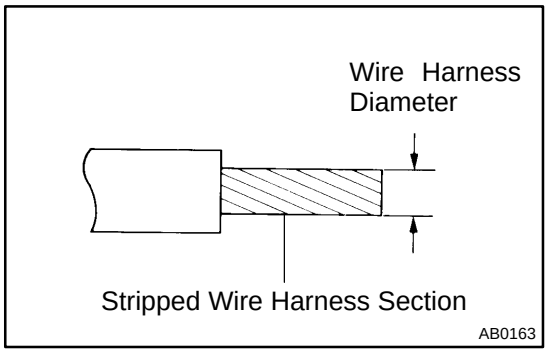

(e) Using a service−purpose wire harness for the vehicle, tie down the front passenger airbag assembly to the tire.

Wire harness: Stripped wire harness section 1.25 mm^2 or more (0.0019 in^2. or more)

HINT:

To calculate the area of the stripped wire harness section:

Area = 3.14 x $(Diameter)^2$ divided by 4

CAUTION:

If the wire harness is too thin or an alternative object is used to tie down the front passenger airbag assy, it may be snapped by the shock when the airbag is deployed. Always use a wire harness for vehicle use with an area of at least 1.25 mm^2 (0.0019 $in.^2$).

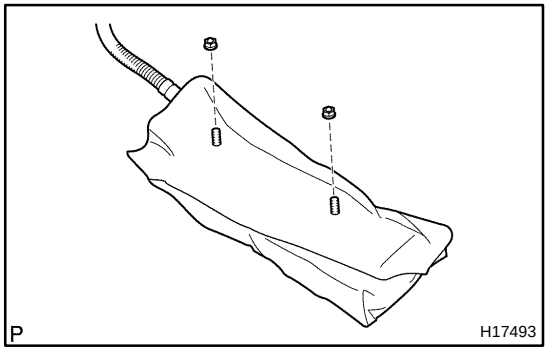

(1) Install the 2 nuts to the side airbag assembly.

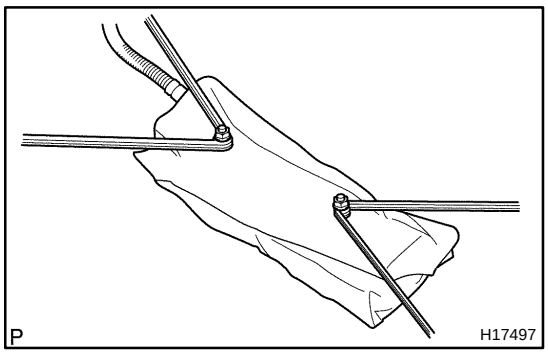

(2) Wind the wire harness around the stud bolts of the side airbag assembly as shown in the illustration.

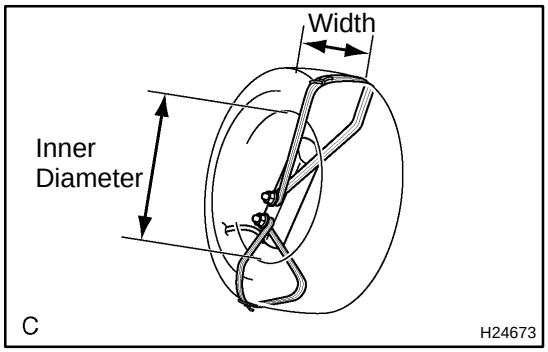

(3) Position the side airbag assembly inside the tire with the airbag deployment direction facing inside.

Tire size: Must exceed the following dimensions:
Width: 185 mm (7.28 in.)
Inner diameter: 360 mm (14.17 in.)

CAUTION:

- **Make sure that the wire harness is tight. If there is slack in wire harness, the side airbag assembly may become loose due to the shock when the airbag is deployed.**
- **Always tie down the side airbag assembly with the airbag deployment side facing inside the tire.**

NOTICE:
The tire will be marked by the airbag deployment, so use an extra tire.

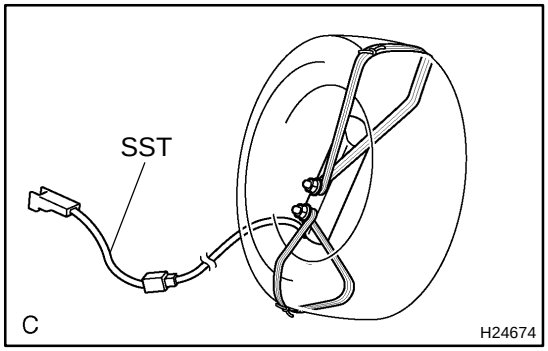

(f) Install the SST.
(1) Connect the SST connector to the side airbag assembly connector.
SST 09082−00750

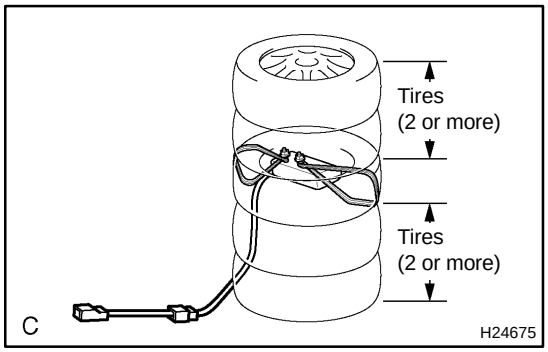

(g) Place the tires.
(1) Place at least 2 tires under the tire which the front seat airbag assembly is tied to.
(2) Place at least 2 tires over the tire which the front seat airbag assembly is tied to. The top tire should have the disc wheel installed.

NOTICE:
Do not place the SST connector under the tire because it could be damaged.

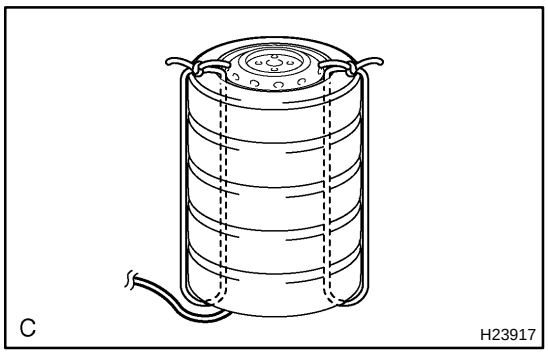

(3) Tie the tires together with 2 wire harness.

CAUTION:

Make sure that the wire harness is tight. Looseness in the wire harness results in the tires coming free due to the shock when the airbag is deployed.

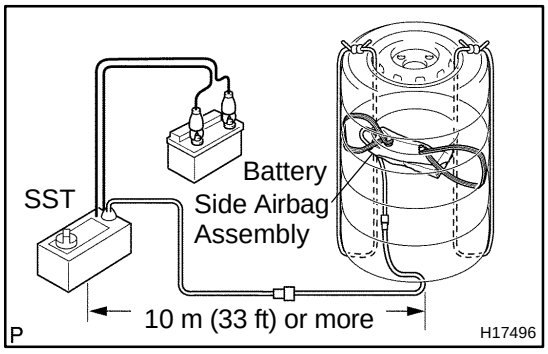

(h) Install the SST.

Connect the connectors of the 2 SST to the side airbag assembly connector.

SST 09082−00700

NOTICE:

To avoid damaging the SST connector and wire harness, do not lock the secondary lock of the twin lock. Also, secure some slack for the SST wire harness inside the tire.

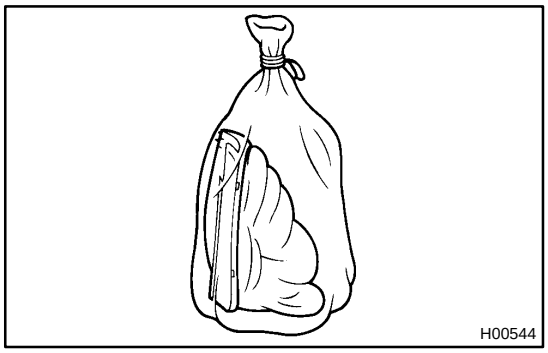

(i) Deploy the airbag.

(1) Connect the red clip of the SST to the battery positive (+) terminal and the black clip of the SST to the battery negative (−) terminal.

(2) Check that no one is within a 10 m (33 ft) radius of the tire which the front seat airbag assy LH is tied to.

(3) Press the SST activation switch and deploy the airbag.

CAUTION:

When deploying the airbag, make sure that no one is near the tire.

HINT:

The airbag deploys as the LED of the SST activation switch comes on.

RS128−01

INSPECTION

1. VEHICLE NOT INVOLVED IN A COLLISION

(a) Perform a diagnostic system check (see page DI−1851).

(b) With the front seat airbag assy installed on the vehicle, perform a visual check. If there are any defects as mentioned below, replace the front seatback assy with a new one:

Cuts, minute cracks or marked discoloration on the front seatback assy around the front seat airbag assy.

2. VEHICLE INVOLVED IN A COLLISION AND AIRBAG IS NOT DEPLOYED

(a) Perform a diagnostic system check (see page DI−1851).

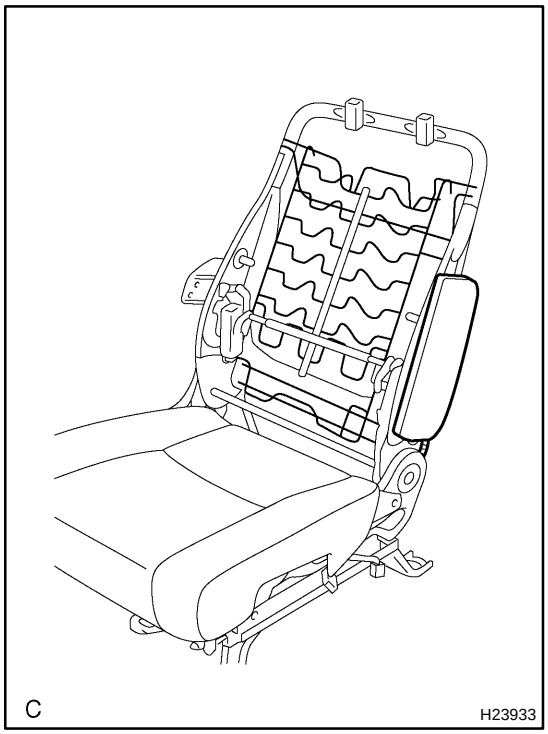

(b) Perform a visual check which includes the following items with the seatback assembly removed from the vehicle.

- Cuts, tears and cracks on the side airbag assembly.
- Cuts and cracks in the wire harness, and chipping in the connectors.

CAUTION:

For removal and installation of the front seatback assembly, see page RS−49 and RS−60. Be sure to follow the correct procedure.

RS12B−01

INSTALLATION

HINT:

- Use the same procedures for the RH side and LH side.
- The procedures listed below are for the LH side.

NOTICE:

- **If the side airbag assembly has been dropped, or there are cracks, dents or other defects in the case or connector, replace the side airbag assembly with a new one.**
- **When installing the side airbag assembly, take care it is not pinched between other parts.**
- **Never use airbag parts from another vehicle. When replacing parts, replace them with new ones.**

1. INSTALL SEATBACK COVER AND PAD

(a) Install the seatback cover and pad to the seat frame assembly.

(b) Install the 2 headrest supports to the seat frame assembly.

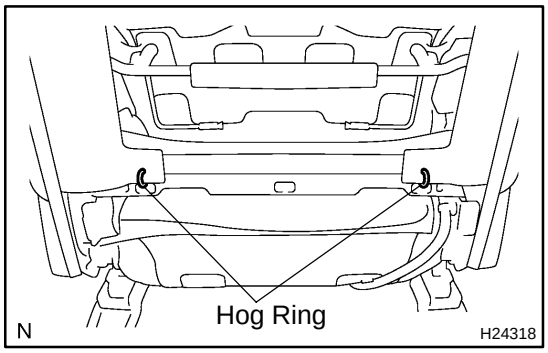

(c) Install the hog rings to the seat frame assembly.

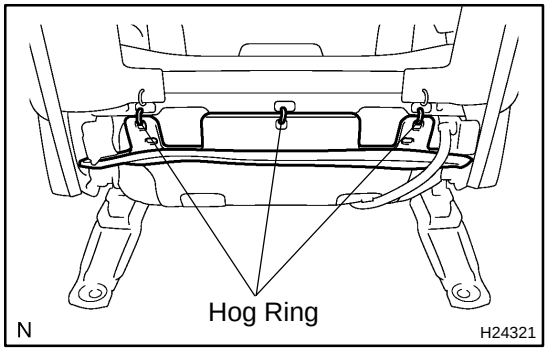

(d) Install the hog rings to the seat frame assembly.

(e) Close the fastener.

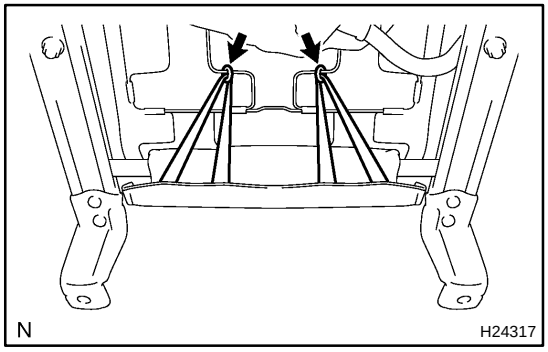

(f) Install the seatback cover belt to the seat frame assembly.

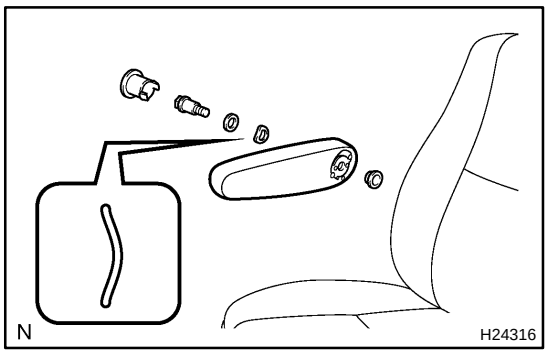

2. INSTALL ARMREST ASSEMBLY

(a) Install the spacer to the armrest assembly.

(b) Install the armrest assembly, armrest lock plate and armrest spacer with the bolt.

Torque: 37 N·m (377 kgf·cm, 27 ft·lbf)

HINT:

(c) Install the armrest cap to the armrest assembly.

3. INSTALL POWER SWITCH

Install the power switch with the 3 screws.

4. INSTALL LUMBAR SWITCH

Install the lumbar switch with the 2 screws to the seat cushion outer shield.

5. INSTALL FRONT SEAT INNER BELT

(a) Install the front seat inner belt with the nut.

Torque: 42 N·m (428 kgf·cm, 31 ft·lbf)

(b) Connect the connectors and wire harness clamps.

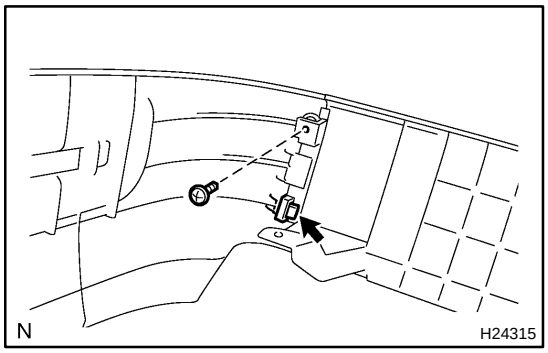

6. INSTALL SEAT CUSHION LOWER SHIELD, SEAT CUSHION OUTER SHIELD AND SEAT CUSHION INNER SHIELD

(a) Assemble the seat cushion lower shield and seat cushion outer shield with the screw.

(b) Perform the same procedure as for the other side.

(c) Connect the lumbar switch connector to the lumbar switch, and install the seat cushion lower shield, outer shield and inner shield.

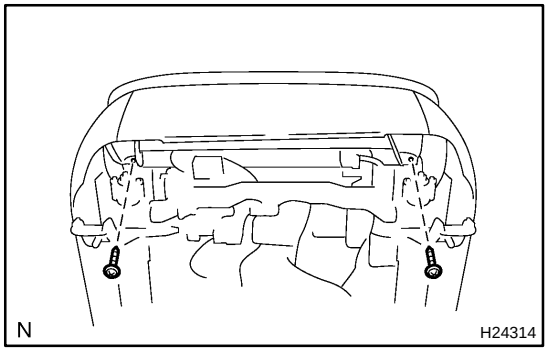

(d) Install the 2 screws to the seat cushion lower shield.

(e) Install the 2 screws to the seat cushion inner shield.

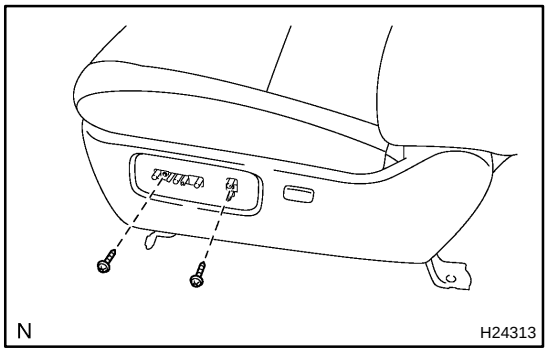

(f) Install the 2 screws to the seat cushion outer shield.

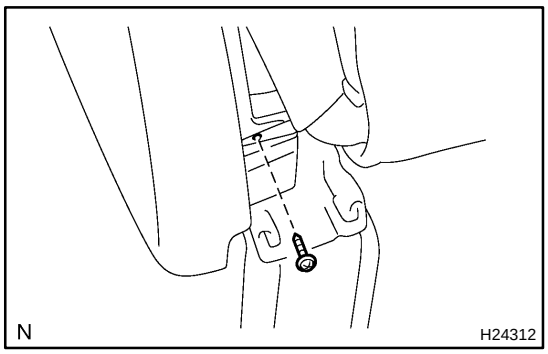

(g) Install the screw to the seat cushion outer shield.

7. INSTALL SLIDE KNOB AND RECLINING KNOB

8. INSTALL HEADREST

9. INSTALL FRONT SEAT

Mount the front seat to the vehicle.

NOTICE:

Be careful not to damage the body.

(a) Connect the connectors.

(b) Slide the front seat to the rearmost position.

(c) Temporarily tighten the bolts on the front side, starting from the bolt on the inner side, and fully tighten them.
Torque: 37 N·m (377 kgf·cm, 27 ft·lbf)

(d) Slide the front seat to the most front position.

(e) Temporarily tighten the bolts on the rear side, starting from the bolt on the inner side, and fully tighten them.
Torque: 37 N·m (377 kgf·cm, 27 ft·lbf)

10. INSTALL SEAT TRACK COVERS

11. CONNECT CABLE TO NEGATIVE BATTERY TERMINAL

12. INSPECT SRS WARNING LIGHT (SEE PAGE DI−1839)

RS127−01

REMOVAL

HINT:

- Use the same procedures for the RH side and LH side.
- The procedures listed below are for the LH side.

NOTICE:

- **If the wiring connector of the SRS is disconnected and the ignition switch is in the ON or ACC position, DTCs will be recorded.**
- **Never use airbag parts from another vehicle. When replacing parts, replace them with new ones.**

1. PRECAUTION (SEE PAGE RS−1 AND RS−3)

2. DISCONNECT CABLE FROM NEGATIVE BATTERY TERMINAL

Wait for 90 seconds after disconnecting the cable to prevent the airbag working.

3. REMOVE SEAT TRACK COVERS

Using a screwdriver, remove the 2 seat track covers.

HINT:

Tape the screwdriver tip before use.

4. REMOVE FRONT SEAT

(a) Remove the 4 bolts.

(b) Disconnect the connectors.

(c) Remove the front seat.

CAUTION:

Be careful not to damage the body.

5. REMOVE HEADREST

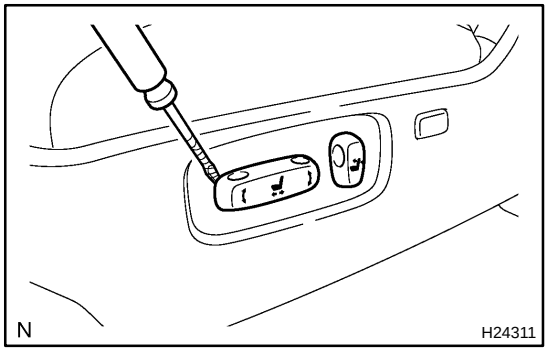

6. REMOVE SLIDE KNOB AND RECLINING KNOB

Using a screwdriver, remove the slide knob and reclining knob.

HINT:

Tape the screwdriver tip before use.

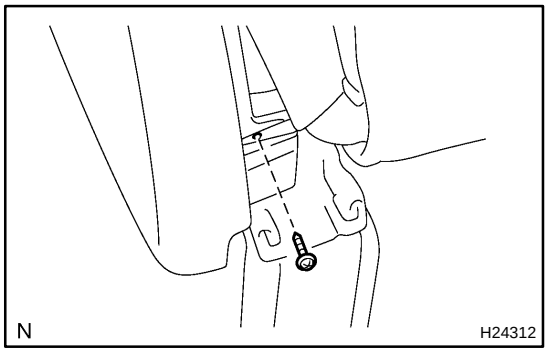

7. REMOVE SEAT CUSHION LOWER SHIELD, SEAT CUSHION OUTER SHIELD AND SEAT CUSHION INNER SHIELD

(a) Remove the screw from the seat cushion outer shield.

(b) Perform the same procedure as for the seat cushion inner shield.

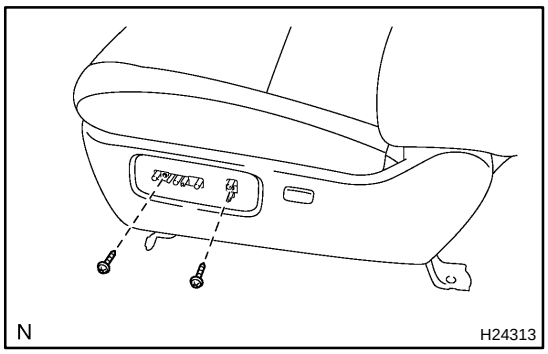

(c) Remove the 2 screws from the seat cushion outer shield.
(d) Remove the screw form the seat cushion inner shield.

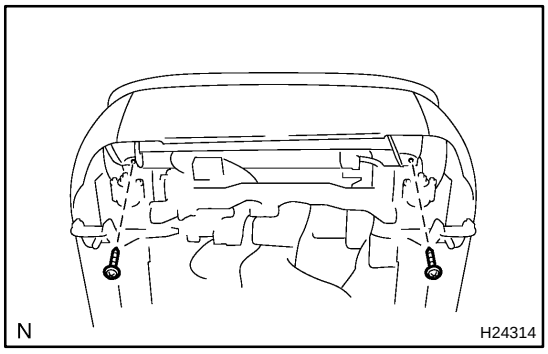

(e) Remove the 2 screws from the seat cushion lower shield.
(f) Disconnect the lumbar switch connector from the lumbar switch, and remove the seat cushion lower shield, outer shield and inner shield.

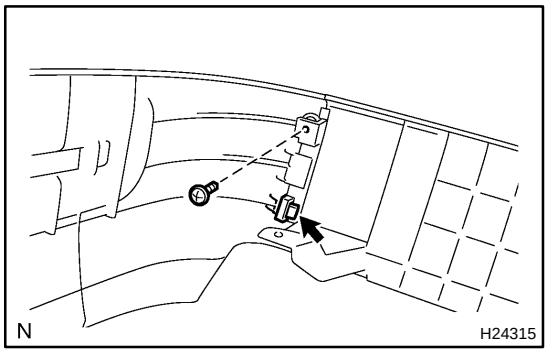

(g) Remove the screw and separate the seat cushion lower shield and seat cushion outer shield.
(h) Perform the same procedure as for the other side.

8. REMOVE FRONT SEAT INNER BELT

(a) Disconnect the wire harness clamps and connectors.
(b) Remove the nut and front seat inner belt.

9. REMOVE LUMBAR SWITCH

Remove the 2 screws and lumbar switch from the seat cushion outer shield.

10. REMOVE POWER SEAT SWITCH

Remove the 3 screws and power seat switch.

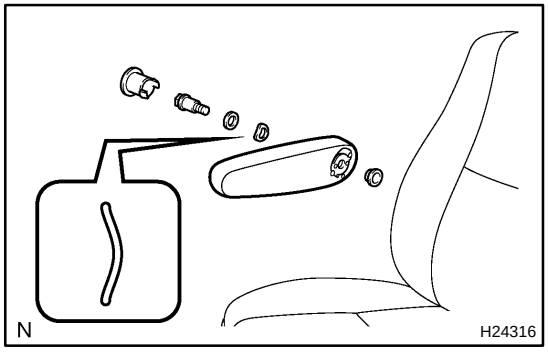

11. REMOVE ARMREST ASSEMBLY

(a) Using a screwdriver, remove the armrest cap.
(b) Remove the bolt, armrest spacer, armrest lock plate and armrest assembly.
(c) Remove the spacer from the armrest assembly.

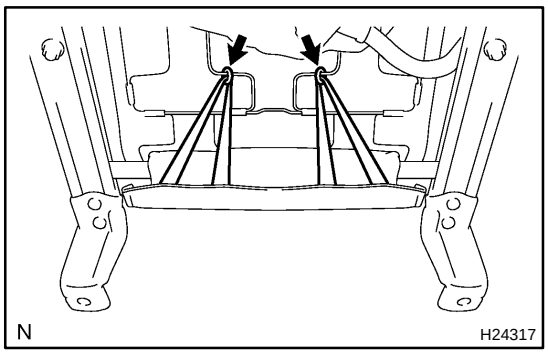

12. REMOVE SEATBACK COVER AND PAD

(a) Remove the seatback cover belt from the seat frame assembly.

(b) Open the fastener.

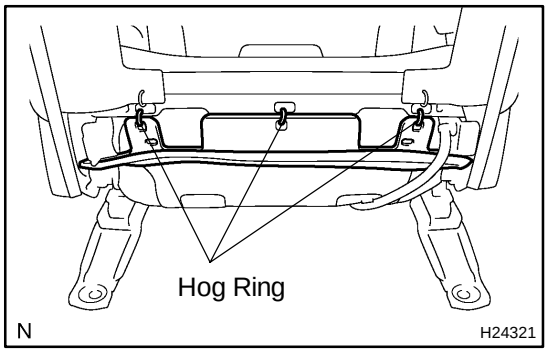

(c) Remove the hog rings from the seat frame assembly.

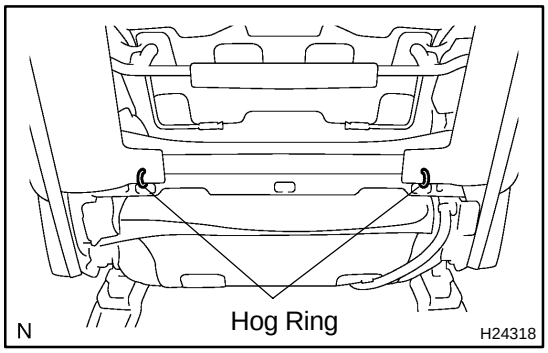

(d) Remove the hog rings from the seat frame assembly.

(e) Remove the 2 headrest supports from the seat frame assembly.

(f) Remove the seatback cover and pad from the seat frame assembly.

RS12A−01

REPLACEMENT

REPLACEMENT REQUIREMENTS

In the following cases, replace the seat frame assembly or seatback cover with a new one.

Case	Replacing part
The side airbag has been deployed.	Seat assembly
The side airbag assembly has been found to be faulty in troubleshooting.	Seat frame assembly
The side airbag assembly has been found to have cuts while checking items (see page RS−52).	Seat frame assembly
The seatback cover has been found to have cuts and frayed seams while checking items (see page RS−52).	Seatback cover
The side airbag assembly has been found to be faulty while checking items (see page RS−52).	Seat frame assembly
The seatback cover has been found to be faulty while checking items (see page RS−52).	Seatback cover
The seatback assembly has been dropped.	Seat frame assembly

CAUTION:

For removal and installation of the seat frame assembly, see page RS−49 and RS−60. Be sure to follow the correct procedure.

SIDE AIRBAG ASSEMBLY (Passenger Side of Split Type)

RS12I–01

COMPONENTS

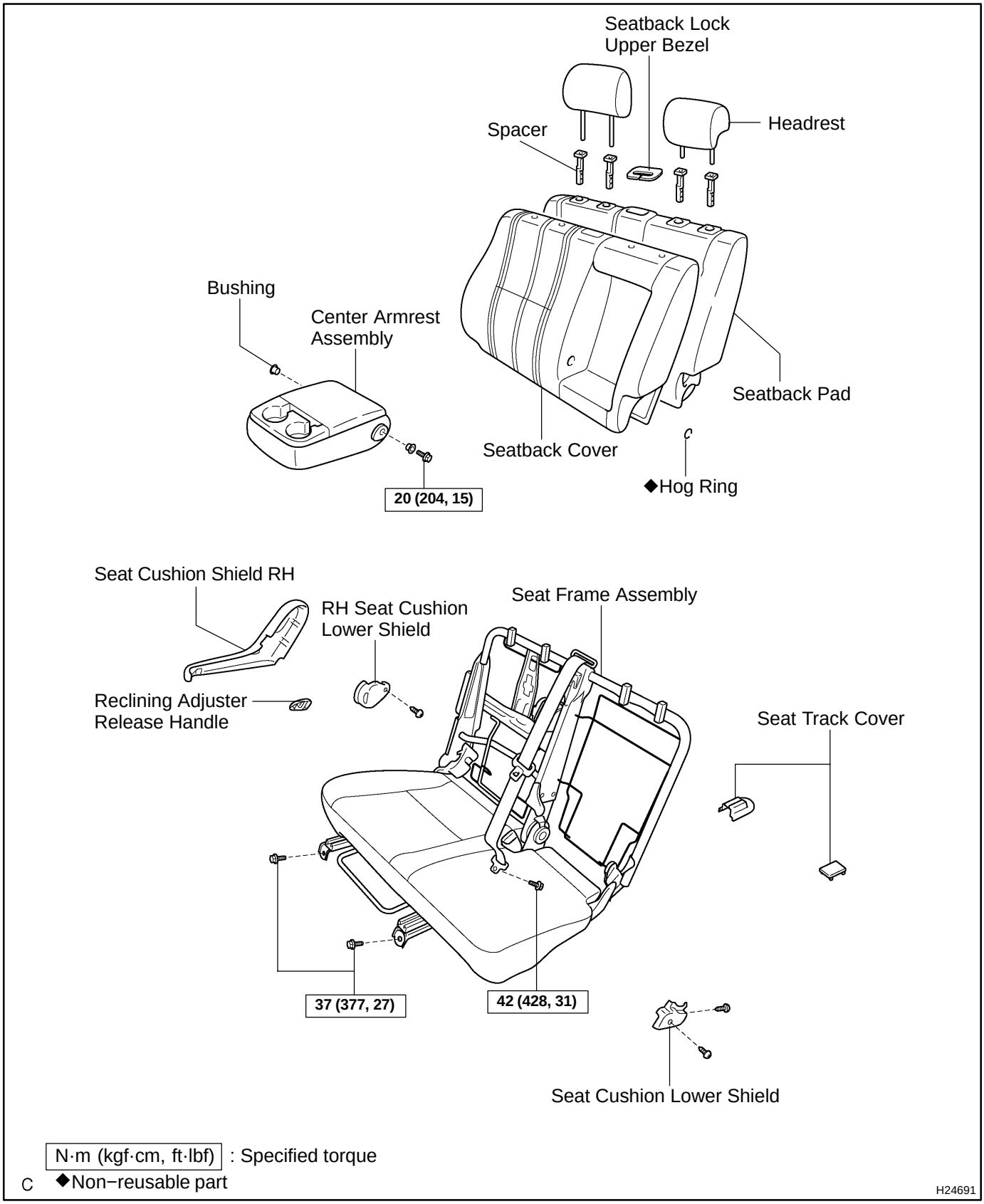

N·m (kgf·cm, ft·lbf) : Specified torque

C ◆Non–reusable part

H24691

RS12L−01

DISPOSAL

See page RS−53.

RS12K–01

INSPECTION

1. VEHICLE NOT INVOLVED IN A COLLISION

(a) Perform a diagnostic system check (see page DI–1851).

(b) With the front seat airbag assy installed on the vehicle, perform a visual check. If there are any defects as mentioned below, replace the front seatback assy with a new one:

Cuts, minute cracks or marked discoloration on the front seatback assy around the front seat airbag assy.

2. VEHICLE INVOLVED IN A COLLISION AND AIRBAG IS NOT DEPLOYED

(a) Perform a diagnostic system check (see page DI–1851).

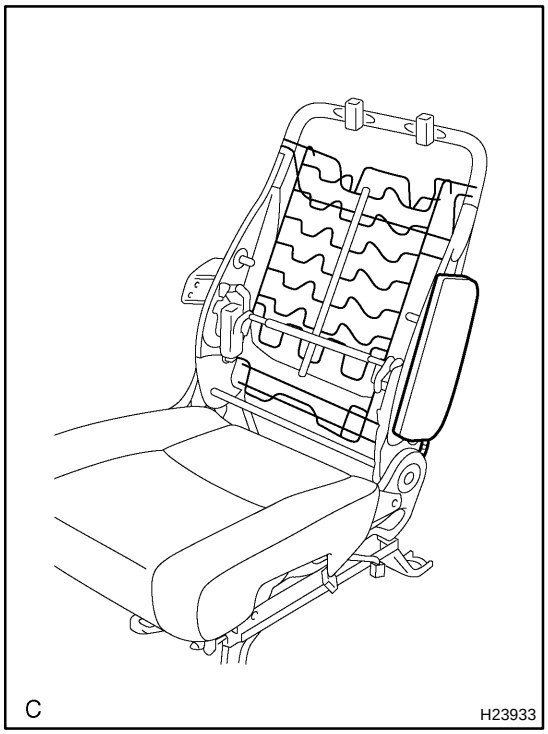

(b) Perform a visual check which includes the following items with the seatback assembly removed from the vehicle:

- Cuts, tears and cracks on the side airbag assembly.
- Cuts and cracks in the wire harness, and chipping in the connectors.

CAUTION:

For removal and installation of the front seatback assembly, see page RS–74 and RS–80. Be sure to follow the correct procedure.

RS12N−01

INSTALLATION

HINT:

- Use the same procedures for the RH side and LH side.
- The procedures listed below are for the LH side.

NOTICE:

- **If the side airbag assembly has been dropped, or there are cracks, dents or other defects in the case or connector, replace the side airbag assembly with a new one.**
- **When installing the side airbag assembly, take care it is not pinched between other parts.**
- **Never use airbag parts from another vehicle. When replacing parts, replace them with new ones.**

1. INSTALL SEATBACK ASSEMBLY

(a) Install the bushing to the seatback frame.

(b) Using a torx® socket wrench, install the seatback assembly with the 2 torx® screws to the seat cushion assembly.
Torque: 42 N·m (428 kgf·cm, 31 ft·lbf)

(c) Install the 3 bolts.
Torque:
Bolt A: 55 N·m (561 kgf·cm, 41 ft·lbf)
Bolt B: 21 N·m (214 kgf·cm, 15 ft·lbf)

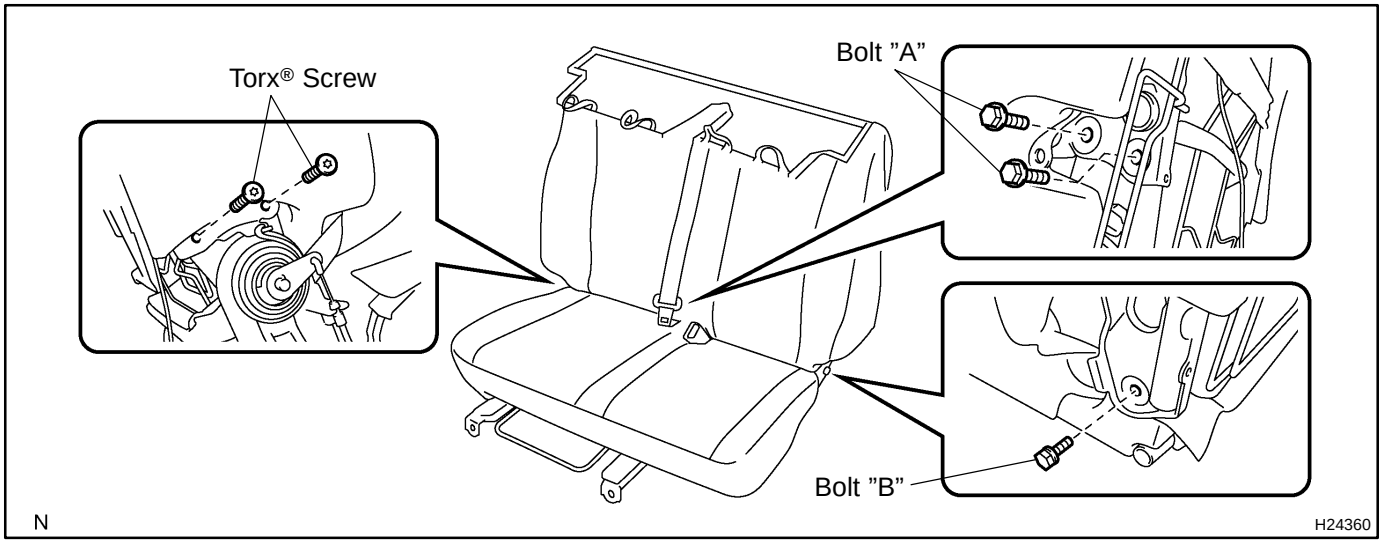

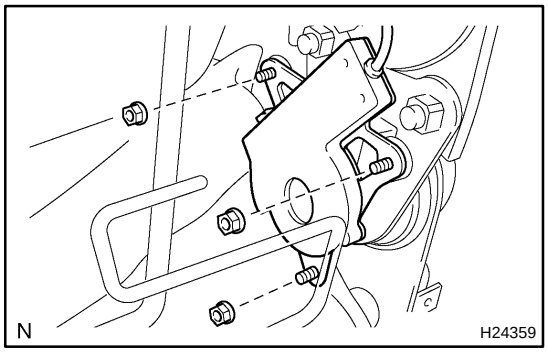

(d) Connect the front seat center belt with the 3 nuts.

(e) Install the RH reclining adjuster inside cover with the 2 screws.

(f) Install the RH seat cushion lower shield with the screw.

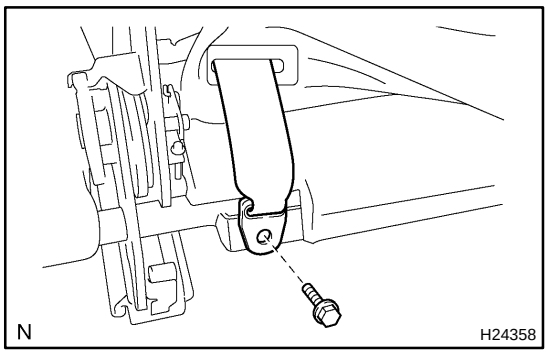

(g) Connect the front seat center belt with the bolt to the seat cushion assembly.
Torque: 42 N·m (428 kgf·cm, 31 ft·lbf)

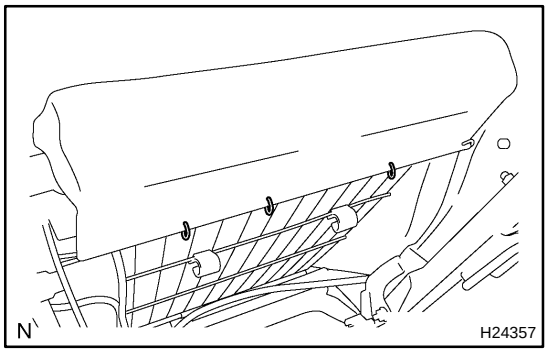

(h) Install the hog rings to the seat cushion cover.
HINT:
When installing hog rings, take care to prevent wrinkles as much as possible.

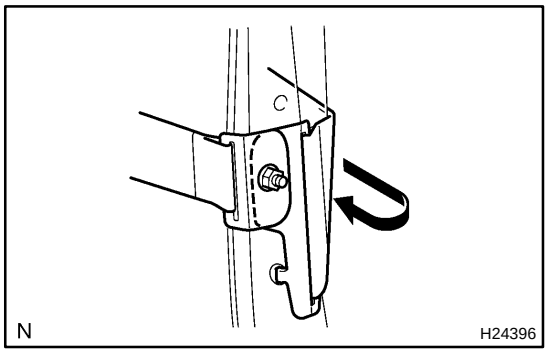

(i) w/ Side airbag:
Connect the seatback cover brackets with the nut to the seatback frame.
Torque: 5.5 N·m (56 kgf·cm, 49 in.·lbf)

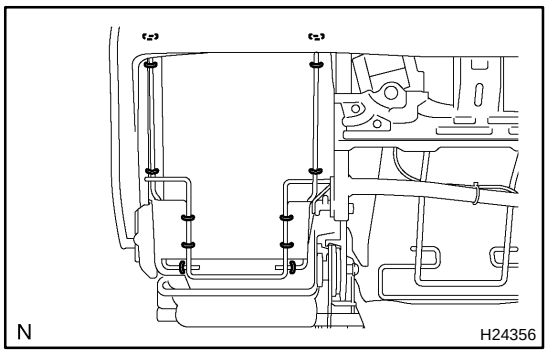

(j) Install the hog rings to the seatback cover.
HINT:
When installing hog rings, take care to prevent wrinkles as much as possible.
(k) Install the 2 bushings.
(l) Install the center armrest assembly with the bolt.
Torque: 20 N·m (204 kgf·cm, 15 ft·lbf)
(m) Close the fastener.

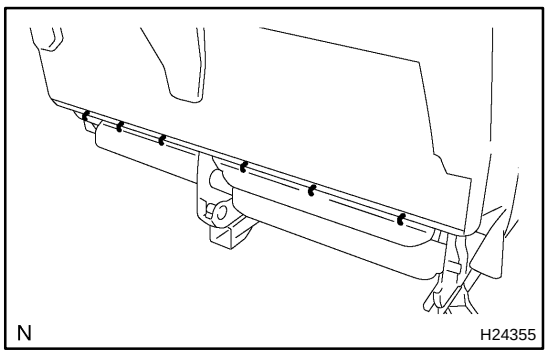

(n) Install the hog rings to the seatback cover.
HINT:
When installing hog rings, take care to prevent wrinkles as much as possible.

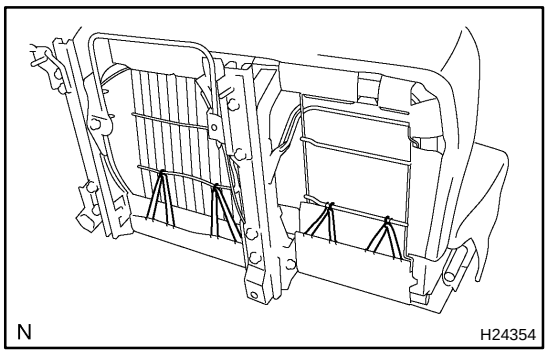

(o) Install the seatback cover belt to the hook.
(p) Install the hog rings to the seatback cover belt.

2. INSTALL SEAT CUSHION LOWER SHIELD

Install the seat cushion lower shield with the 2 screws.

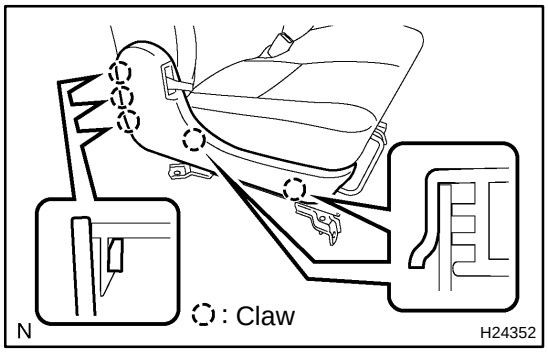

3. INSTALL RH SEAT CUSHION SHIELD

Engage the claws and install the RH seat cushion shield.

4. INSTALL RECLINING ADJUSTER RELEASE HANDLE

5. INSTALL HEADRESTS

6. INSTALL SEAT LEG INNER COVER

Install the seat leg inner cover with the 3 screws.

7. INSTALL FRONT SEAT

(a) Mount the front seat to the vehicle.

NOTICE:

Be careful not to damage the body.

(b) w/ Side airbag:
Connect the airbag connector.
(c) Connect the connectors.
(d) Slide the front seat to the rearmost position .
(e) Tighten the bolts on the front side temporarily, starting from the bolt on the inner side tighten them completely.
Torque: 37 N·m (377 kgf·cm, 27 ft·lbf)
(f) Slide the front seat to the most front position.
(g) Tighten the bolts on the rear side temporarily, starting from the bolt on the inner side tighten them completely.
Torque: 37 N·m (377 kgf·cm, 27 ft·lbf)

8. INSTALL SEAT TRACK COVERS

9. CONNECT CABLE TO NEGATIVE BATTERY TERMINAL

10. INSPECT SRS WARNING LIGHT (SEE PAGE DI−1839)

RS12J−01

REMOVAL

NOTICE:

- **If the wiring connector of the SRS is disconnected and the ignition switch is in the ACC or ON position, DTCs will be recorded.**
- **Never use airbag parts from another vehicle. When replacing parts, replace them with new ones.**

1. PRECAUTION (SEE PAGE RS−1 AND RS−3)

2. DISCONNECT CABLE FROM NEGATIVE BATTERY TERMINAL

Wait for 90 seconds after disconnecting the cable to prevent the airbag working.

3. REMOVE SEAT TRACK COVERS

Using a screwdriver, remove the seat track covers.

HINT:

Tape the screwdriver tip before use.

4. REMOVE FRONT SEAT

(a) Remove the 4 bolts.

(b) Disconnect the connectors.

(c) w/ Side airbag:
Disconnect the airbag connector.

(d) Remove the front seat.

NOTICE:

Be careful not to damage the body.

5. REMOVE HEADRESTS

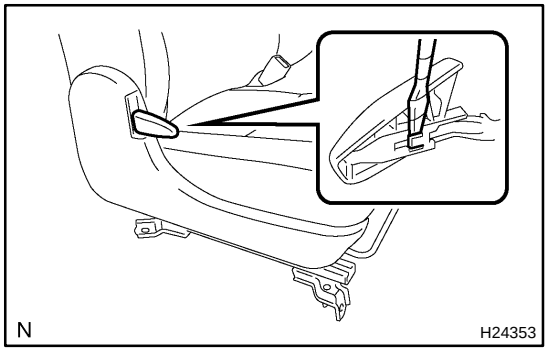

6. REMOVE RECLINING ADJUSTER RELEASE HANDLE

Using a screwdriver, remove the reclining adjuster release handle.

HINT:

Tape the screwdriver tip before use.

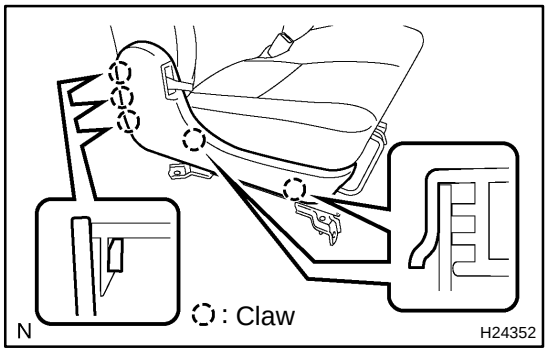

7. REMOVE RH SEAT CUSHION SHIELD

Disengage the claws and remove the RH seat cushion shield.

8. REMOVE SEAT CUSHION LOWER SHIELD

Remove the 2 screws and seat cushion lower shield.

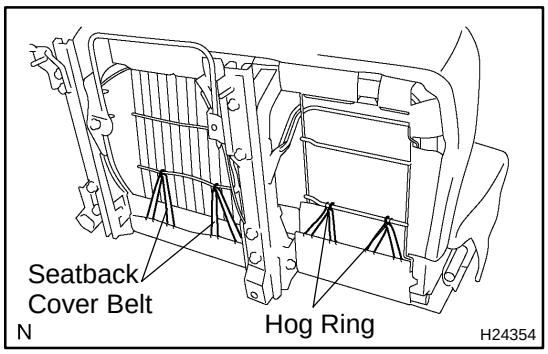

9. REMOVE SEATBACK ASSEMBLY

(a) Remove the hog rings from the seatback cover belt.

(b) Remove the seatback cover belt from the hook.

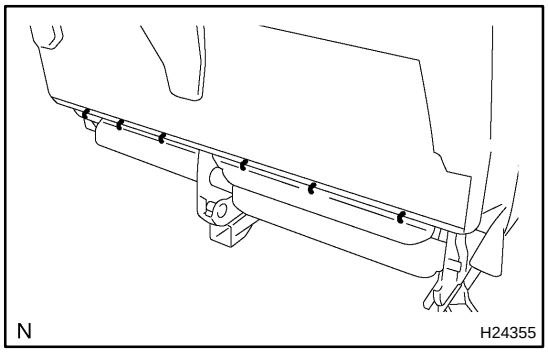

(c) Remove the hog rings from the seatback cover.

(d) Open the fastener.

(e) Remove the bolt and center armrest assembly.

(f) Remove the 2 bushings.

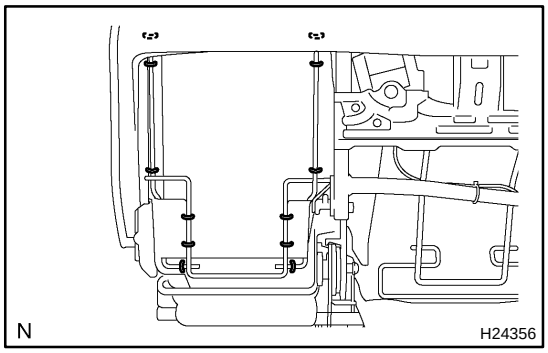

(g) Remove the hog rings from the seatback cover.

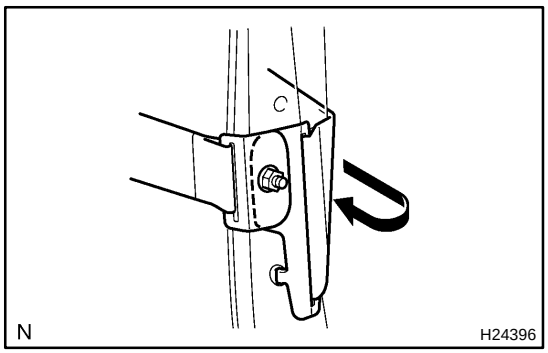

(h) w/ Side airbag:
Remove the nut and disconnect the seatback cover brackets from the seatback frame.

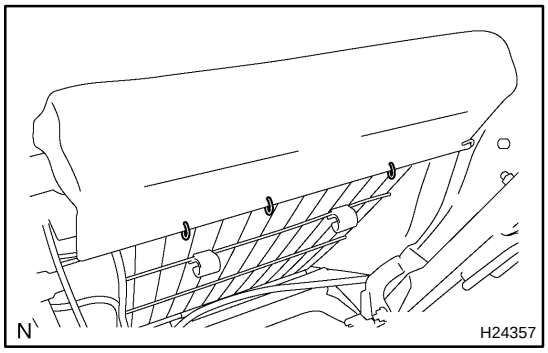

(i) Remove the hog rings from the seat cushion cover.

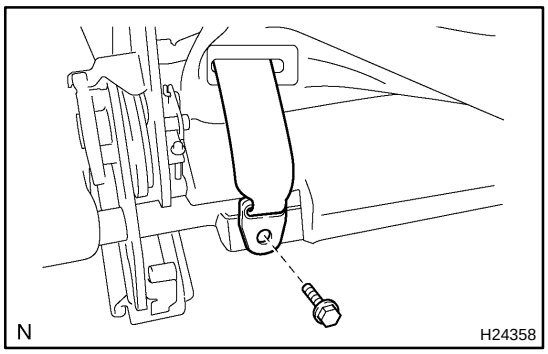

(j) Remove the bolt and disconnect the front seat center belt from the seat cushion assembly.
(k) Remove the screw and RH seat cushion lower shield.
(l) Remove the 2 screws and RH reclining adjuster inside cover.

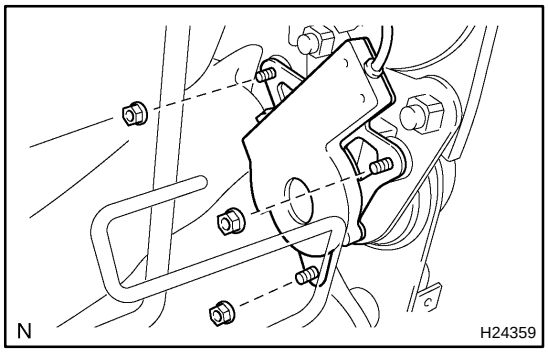

(m) Remove the 3 nuts and disconnect the front seat center belt.

(n) Remove the 3 bolts.
(o) Using a torx® socket wrench, remove the 2 torx® screws and seatback assembly from the seat cushion assembly.
(p) Remove the bushing from the seatback frame.
(q) Remove the 4 headrest supports from the seatback assembly.
(r) Remove the seatback lock upper bezel.
(s) Remove the seatback frame from the seatback pad.

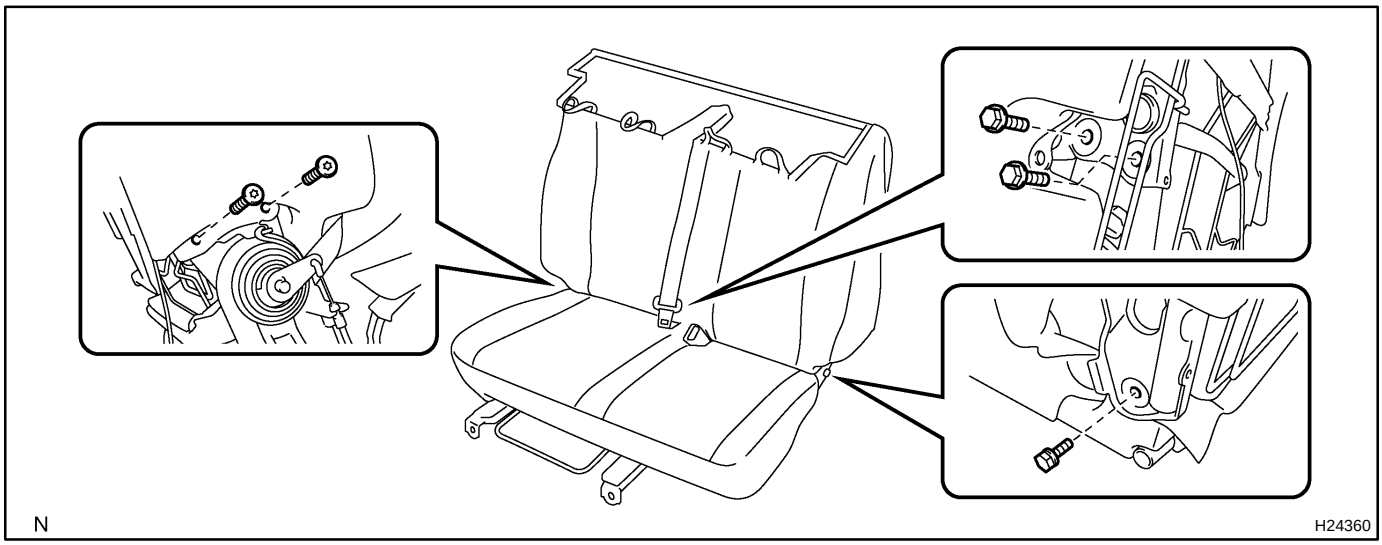

RS12M–01

REPLACEMENT

REPLACEMENT REQUIREMENTS

In the following cases, replace the seat frame assembly or seatback cover with a new one.

Case	Replacing part
The side airbag has been deployed.	Seat assembly
The side airbag assembly has been found to be faulty in troubleshooting.	Seatback assembly
The side airbag assembly has been found to have cuts while checking items (see page RS–77).	Seat frame assembly
The seatback cover has been found to have cuts and frayed seams while checking items (see page RS–77).	Seatback cover
The side airbag assembly has been found to be faulty while checking items (see page RS–77).	Seat frame assembly
The seatback cover has been found to be faulty while checking items (see page RS–77).	Seatback cover
The seatback assembly has been dropped.	Seat frame assembly

CAUTION:

For removal and installation of the seat frame assembly, see page RS–74 and RS–80. Be sure to follow the correct procedure.

SIDE AIRBAG SENSOR ASSEMBLY

RS12S−01

COMPONENTS

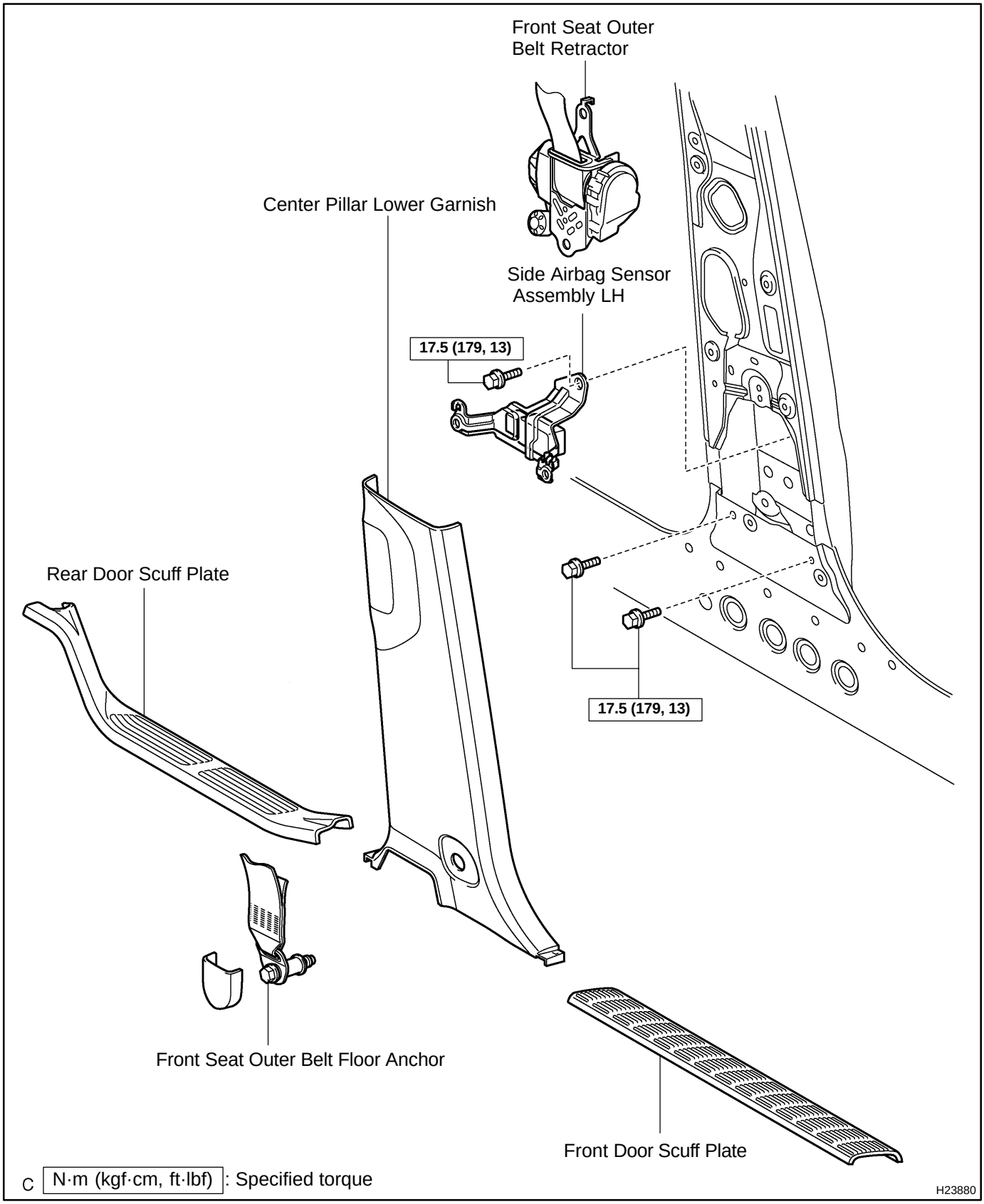

RS12U−01

INSPECTION

1. VEHICLE NOT INVOLVED IN A COLLISION

Perform a diagnostic system check (see page DI−1851).

2. VEHICLE INVOLVED IN A COLLISION AND AIRBAG IS NOT DEPLOYED

Perform a diagnostic system check (see page DI−1851).

3. VEHICLE INVOLVED IN A COLLISION AND AIRBAG IS DEPLOYED

Replace the side airbag sensor assembly (see page DI−1851).

RS12W−01

INSTALLATION

HINT:

- Use the same procedures for the RH side and LH side.
- The procedures listed below are for the LH side.

NOTICE:

- **Never use SRS parts from another vehicle. When replacing parts, replace them with new ones.**
- **Never reuse the side airbag sensor assembly involved in a collision when the airbag has deployed.**
- **If the side airbag sensor assembly center has been dropped, or there are any cracks, dents or other defects in the case, bracket or connector, replace it with a new one.**
- **When installing the side airbag sensor assembly, be careful that the SRS wiring does not interfere with other parts and that it is not pinched between other parts.**
- **After installing, shake the side airbag sensor assembly to check that there is no looseness.**

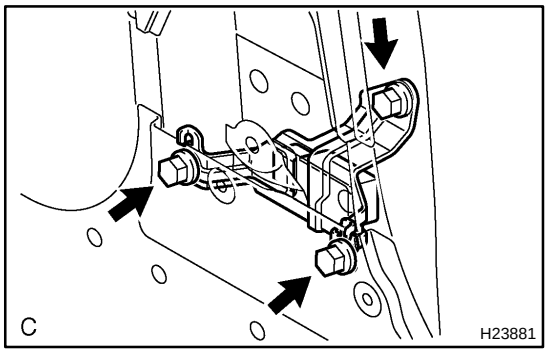

1. INSTALL SIDE AIRBAG SENSOR ASSEMBLY LH

(a) Install the side airbag sensor assembly LH with the 3 bolts.

Torque: 17.5 N·m (179 kgf·cm, 13 ft·lbf)

(b) Connect the connector to the side airbag sensor assembly LH.

2. INSTALL FRONT SEAT OUTER BELT RETRACTOR (SEE PAGE BO−252)

3. INSTALL CENTER PILLAR LOWER GARNISH (SEE PAGE BO−138)

4. INSTALL FRONT SEAT OUTER BELT FLOOR ANCHOR (SEE PAGE BO−138)

5. INSTALL REAR DOOR SCUFF PLATE (SEE PAGE BO−138)

6. INSTALL FRONT DOOR SCUFF PLATE (SEE PAGE BO−138)

7. CONNECT CABLE TO NEGATIVE BATTERY TERMINAL

8. INSPECT SRS WARNING LIGHT (SEE PAGE DI−1839)

RS12T−01

REMOVAL

HINT:

- Use the same procedures for the RH side and LH side.
- The procedures listed below are for the LH side.

NOTICE:

- **If the wiring connector of the SRS is disconnected with the ignition switch in the ON position, DTCs will be recorded.**
- **Never use airbag parts from another vehicle. When replacing parts, replace them with new ones.**
- **Never reuse a side airbag sensor assembly if the airbag has previously deployed in a collision.**

1. PRECAUTION (SEE PAGE RS−1 AND RS−3)

2. DISCONNECT CABLE FROM NEGATIVE BATTERY TERMINAL

Wait for 90 seconds after disconnecting the cable to prevent the airbag working.

3. REMOVE FRONT DOOR SCUFF PLATE (SEE PAGE BO−133)

4. REMOVE REAR DOOR SCUFF PLATE (SEE PAGE BO−133)

5. REMOVE FRONT SEAT OUTER BELT FLOOR ANCHOR (SEE PAGE BO−133)

6. REMOVE CENTER PILLAR LOWER GARNISH (SEE PAGE BO−133)

7. REMOVE FRONT SEAT OUTER BELT RETRACTOR (SEE PAGE BO−236)

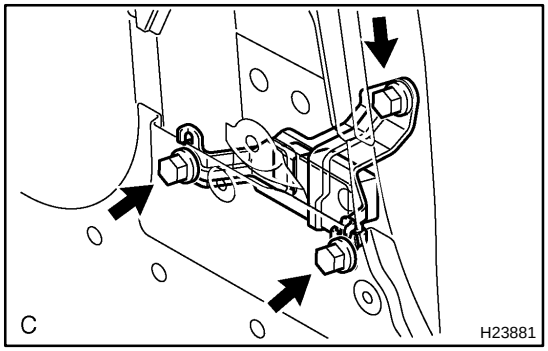

8. REMOVE SIDE AIRBAG SENSOR ASSEMBLY LH

(a) Disconnect the connector from the side airbag sensor assembly LH.

(b) Remove the 3 bolts and the side airbag sensor assembly LH.

RS12V−01

REPLACEMENT

REPLACEMENT REQUIREMENTS

In the following cases, replace the side airbag sensor assembly with a new one.

- The side airbag assembly has been deployed in a collision.
- The side airbag sensor assembly has been found to be faulty in troubleshooting.
- The side airbag sensor assembly has been dropped.

CAUTION:

For removal and installation of the side airbag sensor assembly, see page RS−106 and RS−109. Be sure to follow the correct procedure.

SEAT POSITION SENSOR ASSEMBLY (For Driver Seat)

RS12X–01

COMPONENTS

Separate Type (Manual Adjuster):
Split Type (Driver Seat Side):

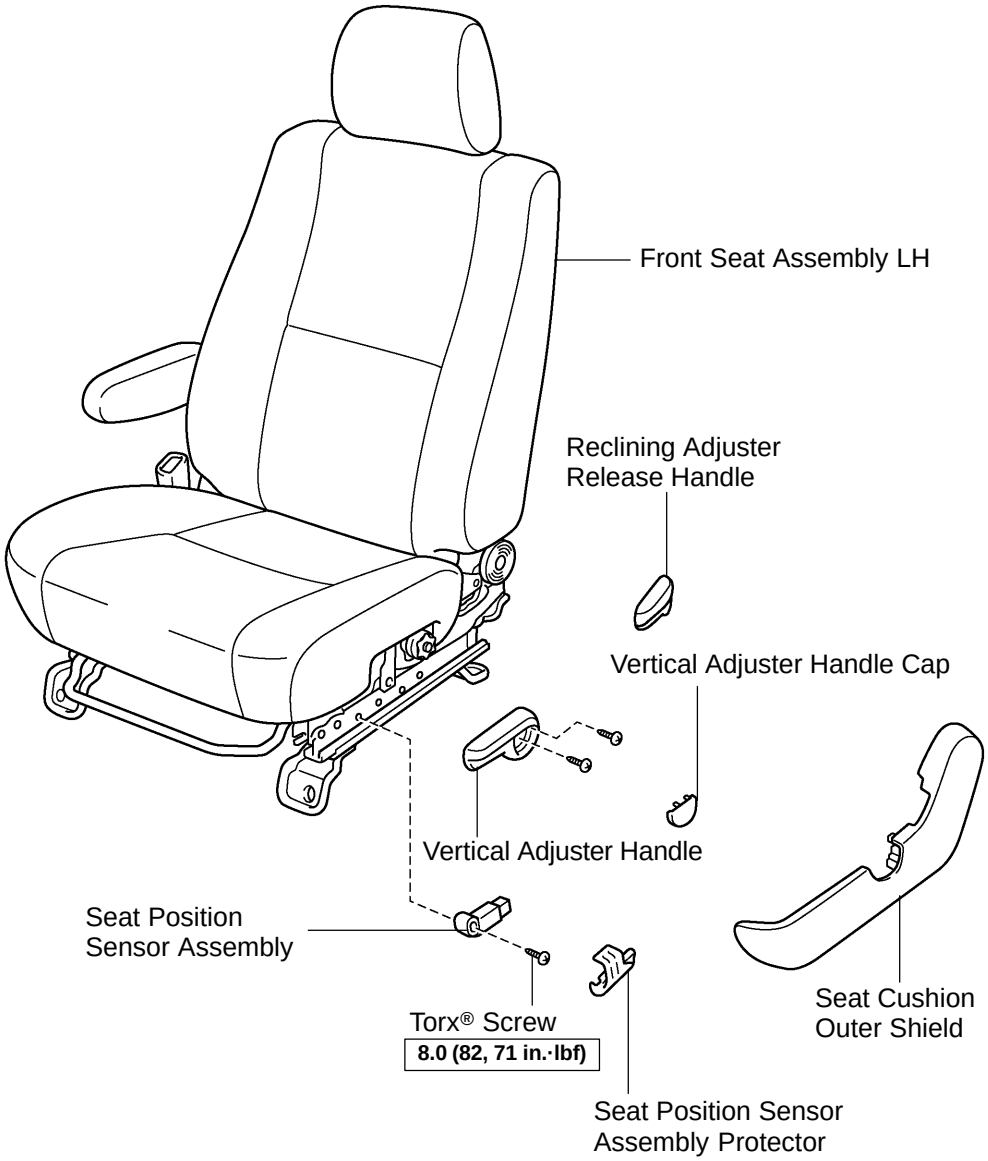

N N·m (kgf·cm, ft·lbf) : Specified torque

cmc0228

Separate Type (Power Adjuster):

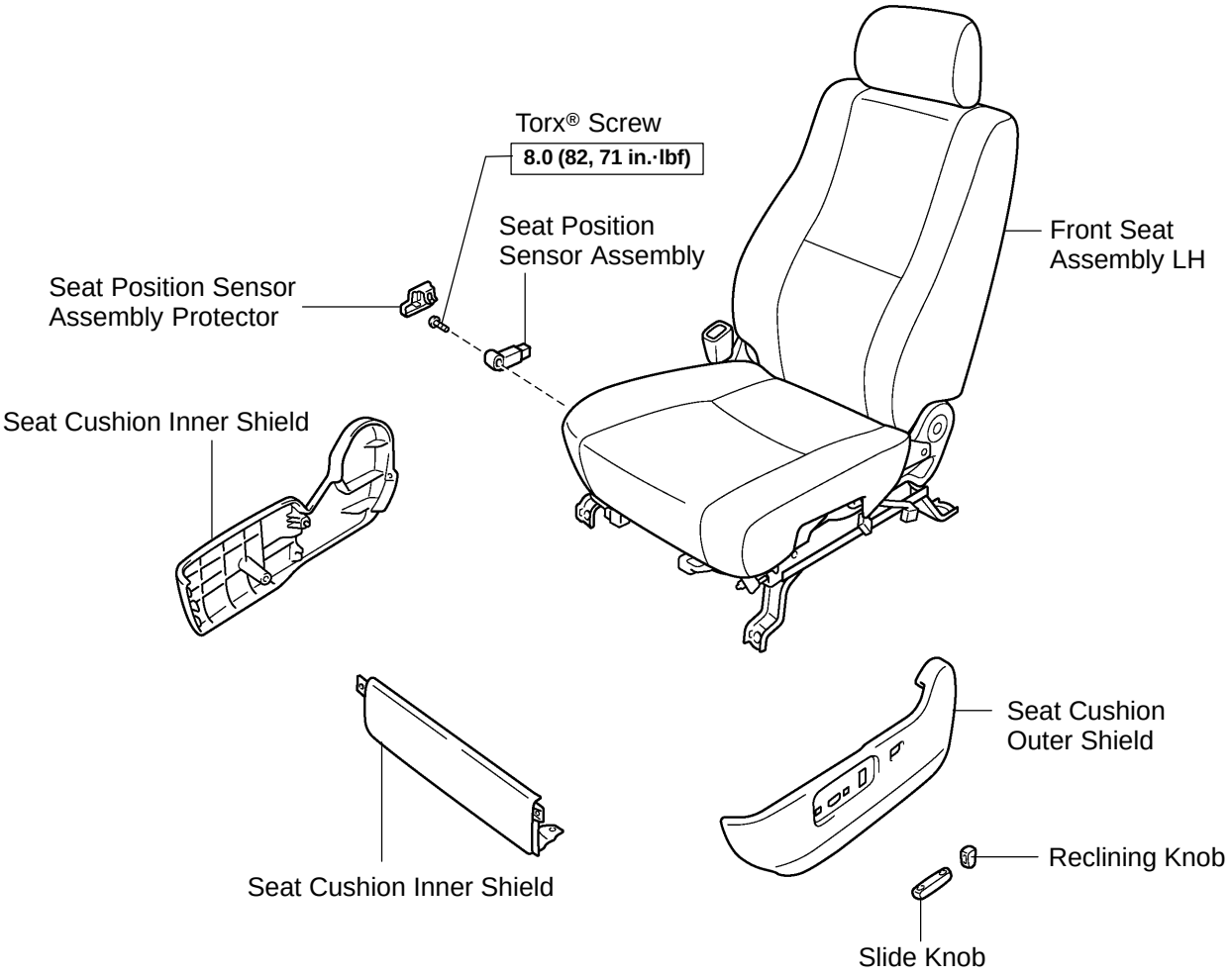

N N·m (kgf·cm, ft·lbf) : Specified torque

cmc0229

Bench Type:

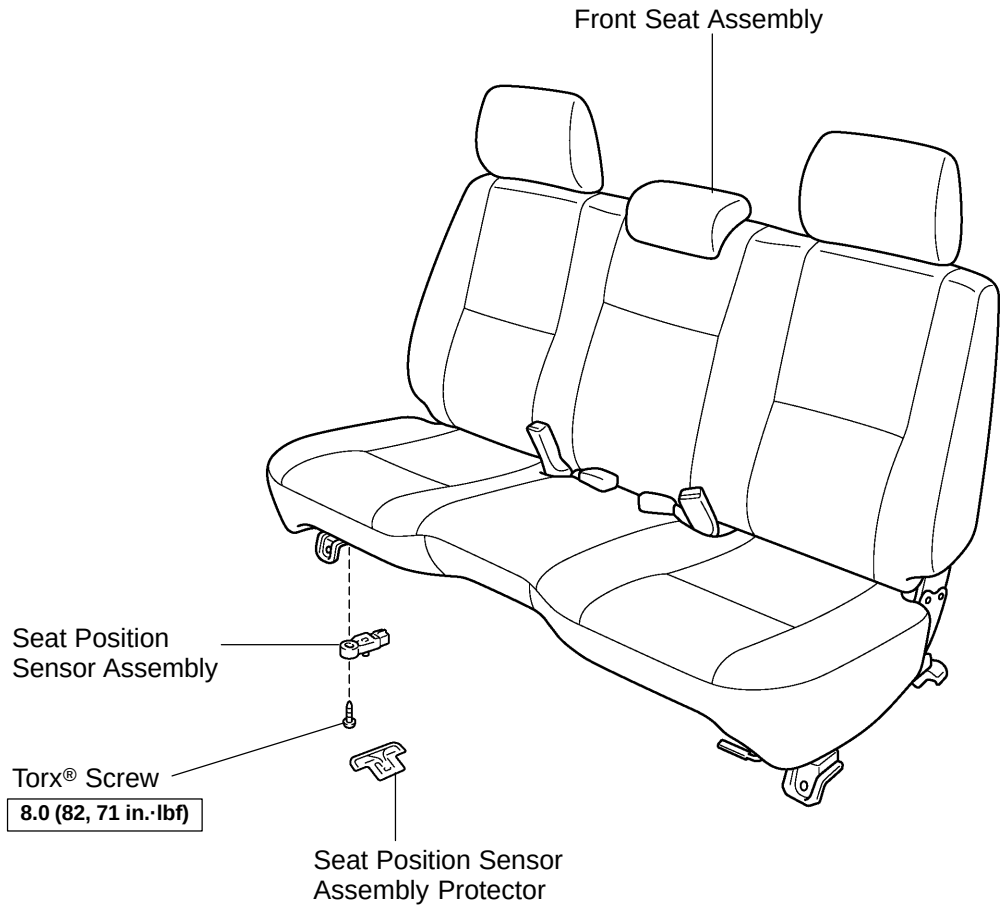

N N·m (kgf·cm, ft·lbf) : Specified torque

cmc0230

RS0UW−07

INSPECTION

1. VEHICLE NOT INVOLVED IN A COLLISION

Perform a diagnostic system check (see page DI−1851).

2. VEHICLE INVOLVED IN A COLLISION

(a) Perform a diagnostic system check (see page DI−1851).

(b) Even if the airbag was not deployed, perform a visual check for damage to the seat position sensor assembly. If there are any defects mentioned below, replace the seat position sensor assembly with a new one:

- Cracks, dents or chips in the case.
- Cracks or other damage to the connector.

CAUTION:

For removal and installation procedures of the seat position sensor assembly, see page RS−118 and RS−122. Be sure to follow the correct procedure.

RS0UY−07

INSTALLATION

NOTICE:

- **Never use SRS parts from another vehicle. When replacing parts, replace them with new ones.**
- **Never reuse the seat position sensor assembly involved in a collision when the airbag has deployed.**
- **If the seat position sensor assembly has been dropped, or there are any cracks, dents or other defects in the case, bracket or connector, replace it with a new one.**
- **When installing the seat position sensor assembly center, be careful that the SRS wiring does not interfere with other parts and that it is not pinched between other parts.**
- **After installing, shake the seat position sensor assembly to check that there is no looseness.**

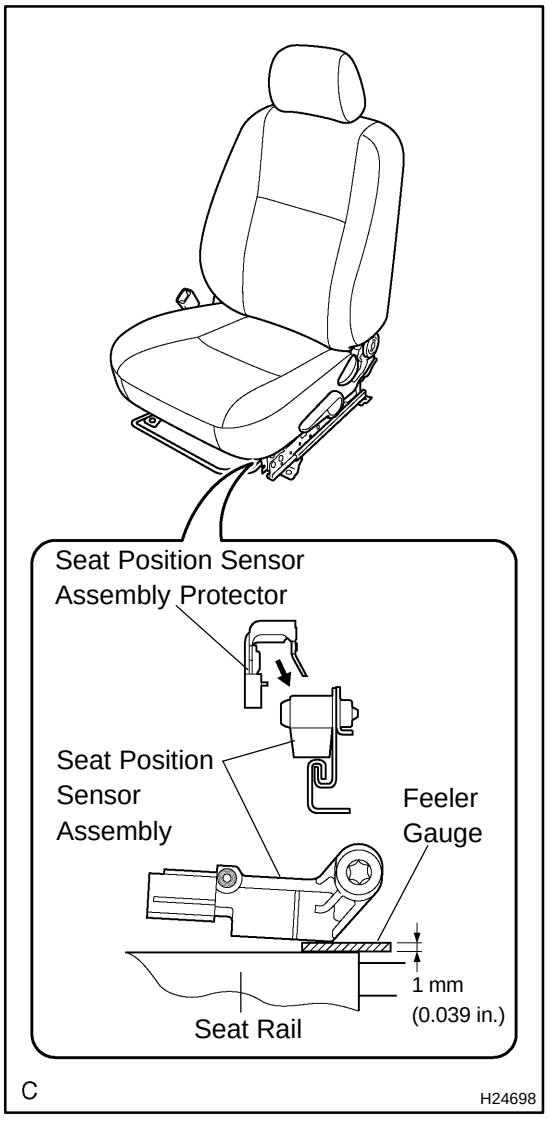

1. INSTALL SEAT POSITION SENSOR ASSEMBLY

(a) Using a torx® socket wrench, install the seat position sensor assembly.

Torque: 8.0 N·m (82 kgf·cm, 71 in.·lbf)

NOTICE:

Using a feeler gauge of 1 mm (0.039 in.), make a clearance between the seat position sensor assembly and the seat rail.

(b) Make sure that a clearance between the seat position sensor assembly and the seat rail is between 0.6 mm (0.023 in.) and 2 mm (0.079 in.).

(c) Connect the connector to the seat position sensor assembly.

2. Separate type:

Split type:

INSTALL SEAT POSITION SENSOR ASSEMBLY PROTECTOR

Install the seat position sensor assembly protector to the seat position sensor assembly.

3. Separate type (Power adjuster):

INSTALL SEAT CUSHION LOWER SHIELD, SEAT CUSHION OUTER SHIELD AND SEAT CUSHION INNER SHIELD (SEE PAGE BO−147)

4. Separate type (Power adjuster):

INSTALL SLIDE KNOB AND RECLINING KNOB (SEE PAGE BO−147)

5. **Separate type (Manual adjuster):**
   Split type:
   INSTALL SEAT CUSHION OUTER SHIELD (SEE PAGE BO–160)
6. **Separate type (Manual adjuster):**
   Split type:
   INSTALL VERTICAL ADJUSTER HANDLE (SEE PAGE BO–160)
7. **Separate type:**
   Split type:
   INSTALL FRONT SEAT ASSEMBLY LH (SEE PAGE BO–153)
8. **Bench type:**
   INSTALL FRONT SEAT ASSEMBLY (SEE PAGE BO–175)
9. **CONNECT CABLE TO NEGATIVE BATTERY TERMINAL**
10. **INSPECT SRS WARNING LIGHT (SEE PAGE DI–1839)**

RS0UV−07

REMOVAL

NOTICE:

- **If the wiring connector of the SRS is disconnected with the ignition switch in the ON position, DTCs will be recorded.**
- **Never use SRS parts from another vehicle. When replacing the parts, replace them with new ones.**
- **Never reuse a seat position sensor assembly if the airbag has previously deployed in a collision.**

1. **PRECAUTION (SEE PAGE RS−1 AND RS−3)**
2. **DISCONNECT CABLE FROM NEGATIVE BATTERY TERMINAL**

Wait for 90 seconds after disconnecting the cable to prevent the airbag working.

3. **Separate type:**
   Split type:
   REMOVE FRONT SEAT ASSEMBLY LH
   (SEE PAGE BO−141)
4. **Bench type:**
   REMOVE FRONT SEAT ASSEMBLY
   (SEE PAGE BO−166)
5. **Separate type (Manual adjuster):**
   Split type:
   REMOVE VERTICAL ADJUSTER HANDLE
   (SEE PAGE BO−156)
6. **Separate type (Manual adjuster):**
   Split type:
   REMOVE SEAT CUSHION OUTER SHIELD
   (SEE PAGE BO−156)
7. **Separate type (Power adjuster):**
   REMOVE SLIDE KNOB AND RECLINING KNOB
   (SEE PAGE BO−142)
8. **Separate type (Power adjuster):**
   REMOVE SEAT CUSHION LOWER SHIELD, SEAT CUSHION OUTER SHIELD AND SEAT CUSHION INNER SHIELD (SEE PAGE BO−142)

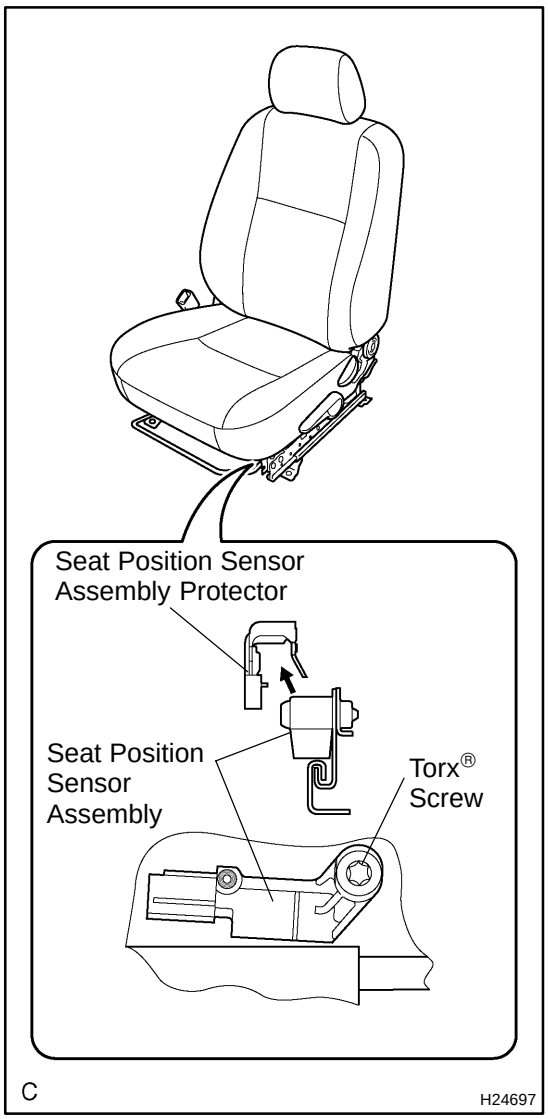

9. REMOVE SEAT POSITION SENSOR ASSEMBLY PROTECTOR

Remove the seat position sensor assembly protector from the seat position sensor assembly.

10. REMOVE SEAT POSITION SENSOR ASSEMBLY

(a) Disconnect the connector from the seat position sensor assembly.

(b) Using a torx® socket wrench (T30), remove the torx® screw and the seat position sensor assembly.

RS0UX−06

REPLACEMENT

REPLACEMENT REQUIREMENTS

In the following cases, replace the seat position sensor assembly with a new one.

- The seat position sensor assembly has been found to be faulty in troubleshooting.
- The seat position sensor assembly has been dropped.

CAUTION:

For removal and installation procedures of the seat position sensor assembly, see page RS−118 and RS−122. Be sure to follow the correct procedure.

RS120−01

OPERATION

CAUTION:

Be sure to perform the initialization of the occupant classification ECU if any of the following conditions occur (see page DI−1829). If the initialization is not performed, the SRS may not operate properly.

- **The occupant classification ECU is replaced.**
- **Accessories (seatback tray, seat cover, etc.) are installed to the vehicle.**
- **The passenger seat is removed from the vehicle, and then reinstalled or replaced.**
- **The passenger airbag ON/OFF indicator light (”OFF”) comes on when the passenger seat is not occupied.**
- **The vehicle is brought to the workshop for repair due to an accident or collision.**

NOTICE:

The sensitivity check method differs according to the front seat type (separate seat and bench seat, split seat).

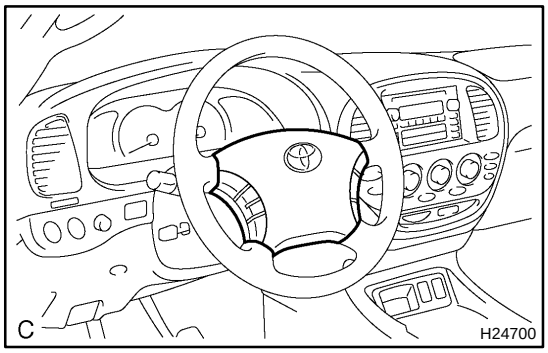

1. STEERING WHEEL PAD

The inflator and bag of the SRS are stored in the steering wheel pad and cannot be disassembled. The inflator contains a squib, igniter charge, and gas generator, etc., and inflates the bag when instructed by the airbag sensor assembly. The steering wheel pad cannot be disassembled.

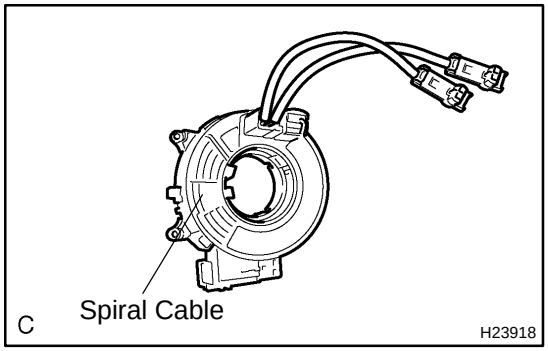

2. SPIRAL CABLE

A spiral cable is used as an electrical joint from the vehicle body side to the steering wheel. The spiral cable cannot be disassembled.

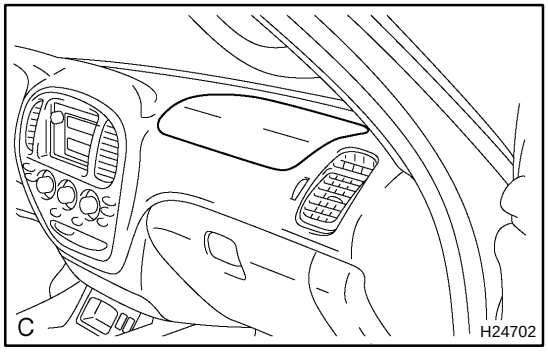

3. FRONT PASSENGER AIRBAG ASSEMBLY

The inflator and bag of the SRS are stored in the front passenger airbag assembly and cannot be disassembled. The inflator contains a squib, igniter charge, gas generator, etc., and inflates the bag when instructed by the airbag sensor assembly. The front passenger airbag assembly cannot be disassembled.

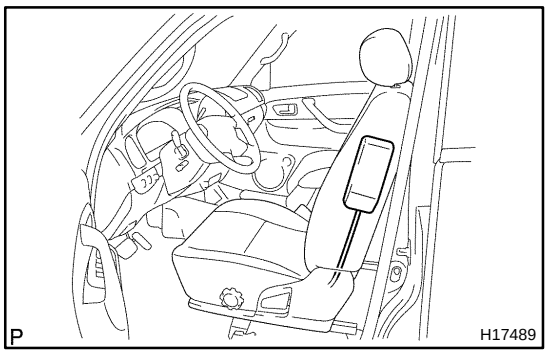

4. SIDE AIRBAG ASSEMBLY

The inflator and bag of the SRS are stored in the side airbag assembly and cannot be disassembled. The inflator contains a squib, igniter charge and gas generator, etc., and inflates the bag when instructed by the airbag sensor assembly. The side airbag assembly cannot be disassembled.

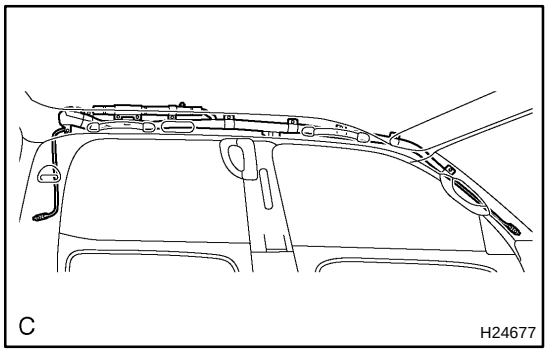

5. CURTAIN SHIELD AIRBAG ASSEMBLY

The inflator and bag of the SRS are stored in the curtain shield airbag assembly and cannot be disassembled. The inflator contains a squib, igniter charge, gas generator, etc., and inflates the bag when instructed by the airbag sensor assembly. The curtain shield airbag assembly cannot be disassembled.

6. SEAT BELT PRETENSIONER

The front seat outer belt has the seat belt pretensioner system. The pretensioner operates in the event of a frontal collision. The seat belt pretensioner cannot be disassembled.

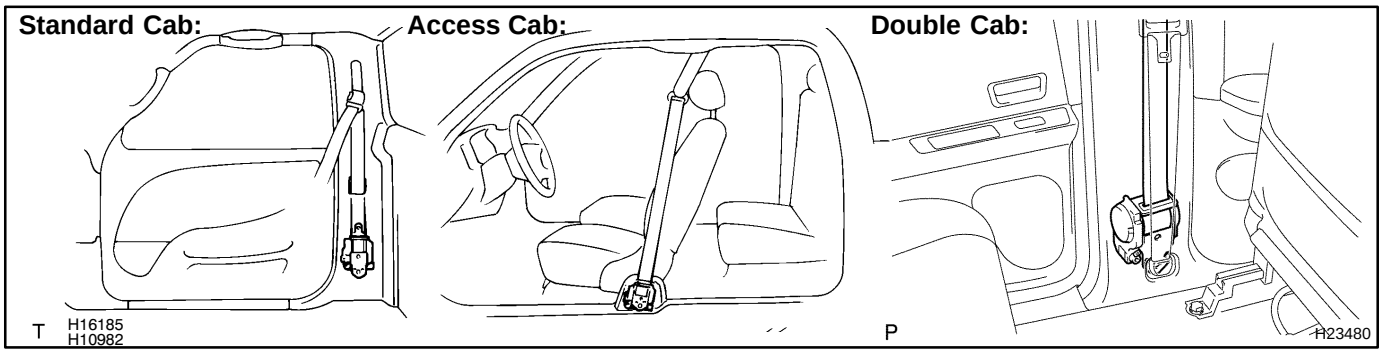

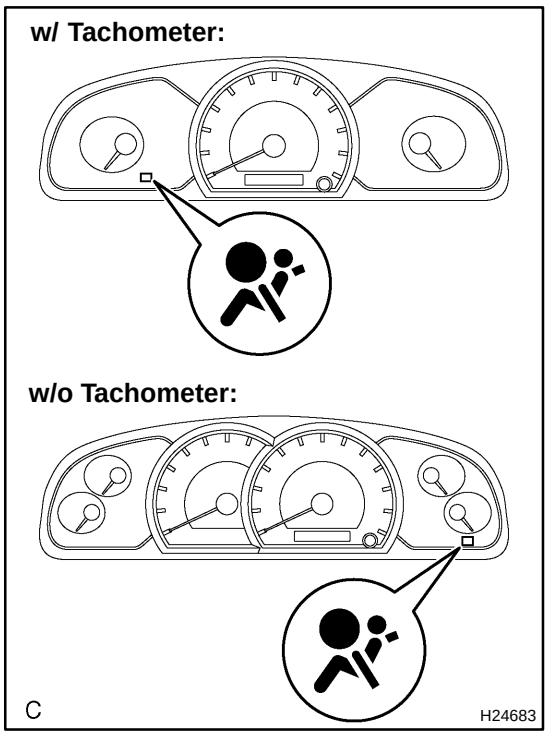

7. SRS WARNING IGHT

The SRS warning light is located on the combination meter. It comes on to alert the driver of trouble in the system when a malfunction is detected in the airbag sensor assembly. In normal operation conditions when the ignition switch is turned to the ON position, the light comes on for approximately 6 seconds and then goes off.

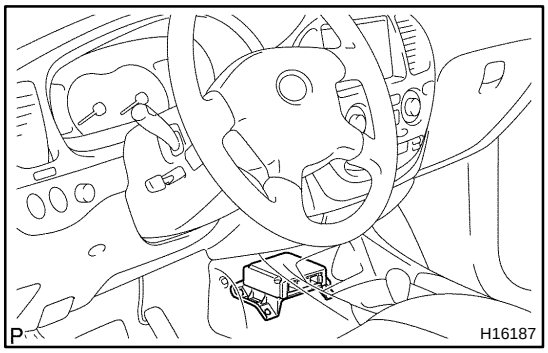

8. AIRBAG SENSOR ASSEMBLY

The airbag sensor assembly is mounted on the floor inside the lower center finish panel. The airbag sensor assembly consists of an airbag sensor, safing sensor, diagnosis circuit, ignition control, drive circuit, etc. It receives signals from the airbag sensor, front airbag sensor, side and curtain shield airbag sensor and curtain shield airbag sensor, and judges whether the SRS must be activated or not. The airbag sensor assembly cannot be disassembled.

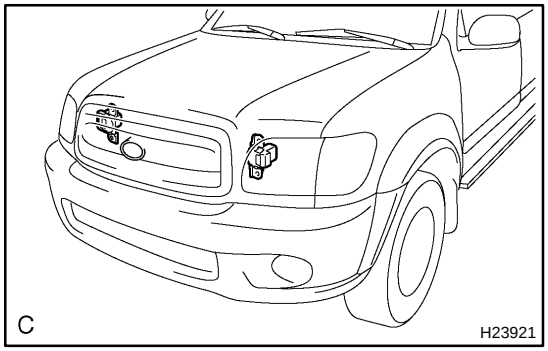

9. FRONT AIRBAG SENSOR

The front airbag sensor is mounted inside each of the radiator support. The front airbag sensor consists of an airbag sensor, diagnosis circuit, etc. It sends signals to the airbag sensor assembly to judge whether the SRS must be activated or not. The front airbag sensor cannot be disassembled.

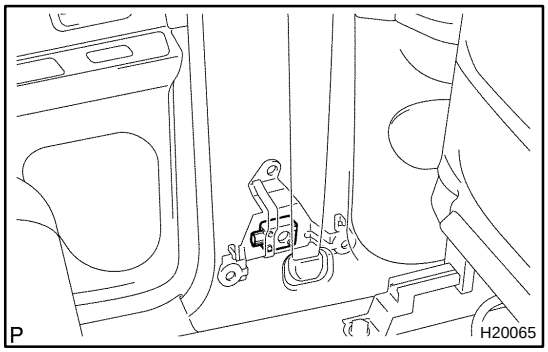

10. SIDE AIRBAG SENSOR ASSEMBLY

The side airbag sensor assembly is mounted in the LH and RH center pillars. The side airbag sensor assembly consists of an airbag sensor, diagnosis circuit, etc. It sends signals to the airbag sensor assembly to judge whether the SRS must be activated or not. The side airbag sensor assembly cannot be disassembled.

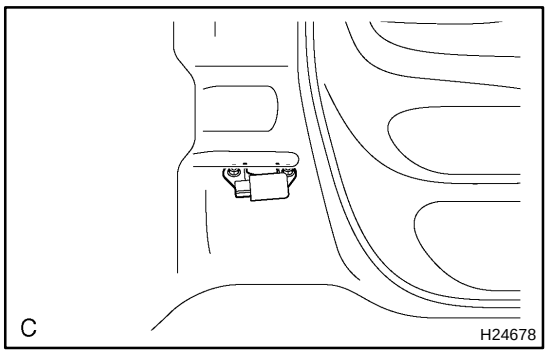

11. CURTAIN SHIELD AIRBAG SENSOR ASSEMBLY

The curtain shield airbag sensor assembly is mounted in the LH and RH quarter panels. The curtain shield airbag sensor assembly consists of an airbag sensor, diagnosis circuit, etc. It sends signals to the airbag sensor assembly to judge whether the SRS must be activated or not. The curtain shield airbag sensor assembly cannot be disassembled.

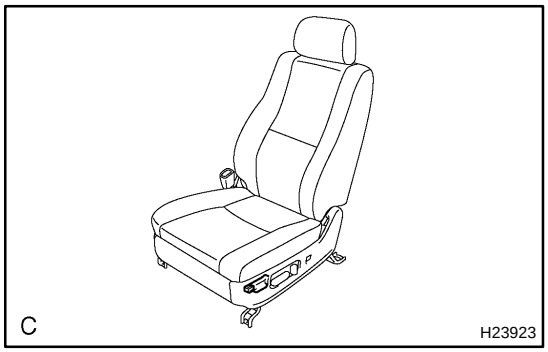

12. SEAT POSITION SENSOR ASSEMBLY

The seat position sensor assembly is mounted in the front seat (for driver seat and front passenger seat). The sensor unit consists of a magnet sensor, etc. It judges the seat sliding position and sends the signal to the airbag sensor assembly. The seat position sensor assembly cannot be disassembled.

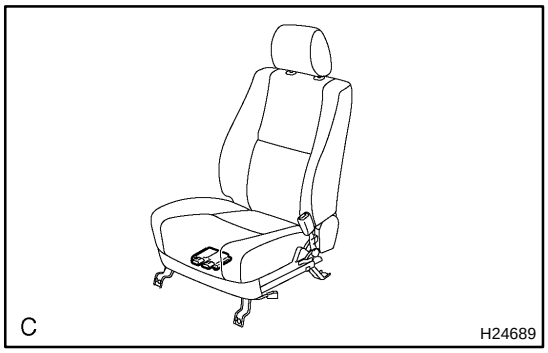

13. OCCUPANT CLASSIFICATION ECU

The occupant classification ECU is mounted in the passenger seat. Based on the information sent from the occupant classification ECU, the airbag sensor assembly determines whether the SRS should be activated or not. The occupant classification ECU cannot be disassembled.

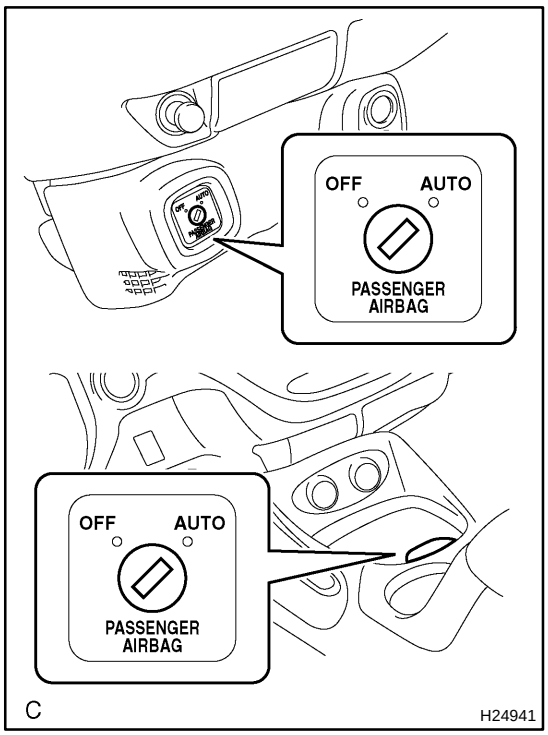

14. PASSENGER AIRBAG MANUAL AUTO−OFF SWITCH

The passenger airbag manual AUTO−OFF switch is mounted on the lower center cover or front console box. By turning the passenger airbag manual AUTO−OFF switch to OFF with the ignition key, the passenger airbag system can be disabled. Also, in order to inform the passenger that the front passenger airbag is disabled, the OFF indicator inside the switch illuminates.

Switch Position	Passenger Airbag	Indicator Light
AUTO	Operative	OFF
OFF	Disabled	ON

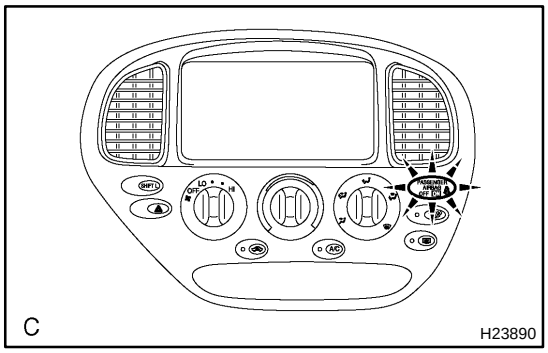

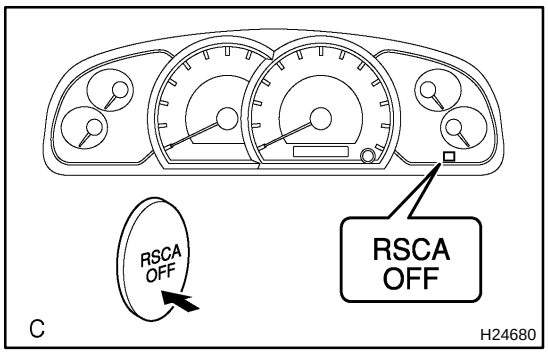

15. RSCA OFF SWITCH

The RSCA OFF switch is located on the switch base. The curtain shield airbag can be switched ON and OFF by pushing the RCSA OFF switch. Also, the RCSA OFF indicator lamp comes on to inform the passenger that the curtain shield airbag is disabled.

Switch Position	Curtain Shield Airbag	Indicator Light
ON	Operative	OFF
OFF	Disabled	ON

16. SRS CONNECTORS

HINT:

SRS connectors are located as shown in the following illustration.

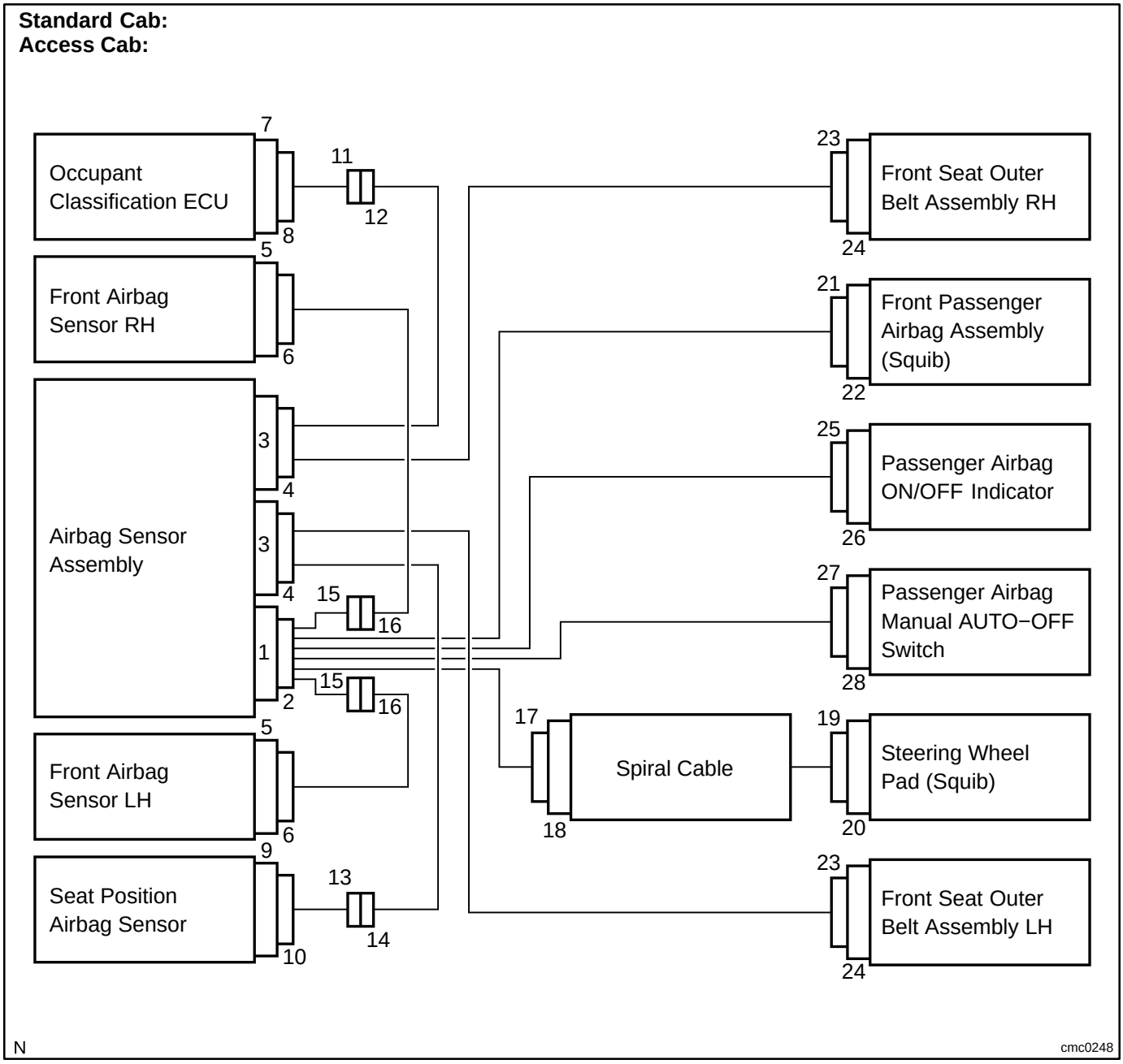

No.	Connector Type	Application
(1)	Terminal Twin−Lock Mechanism	Connectors 2, 4, 16, 17, 21, 22
(2)	Activation Prevention Mechanism	Connectors 2, 4, 18, 20, 22, 24
(3)	Half Connection Prevention Mechanism	Connectors 6, 15, 17, 21
(4)	Connector Lock Mechanism (1)	Connectors 19, 31
(5)	Connector Lock Mechanism (2)	Connectors 2, 4
(6)	Improper Connection Prevention Lock Mechanism	Connectors 1, 3
(7)	RSCA OFF Switch	Connectors 1, 3

Double Cab:

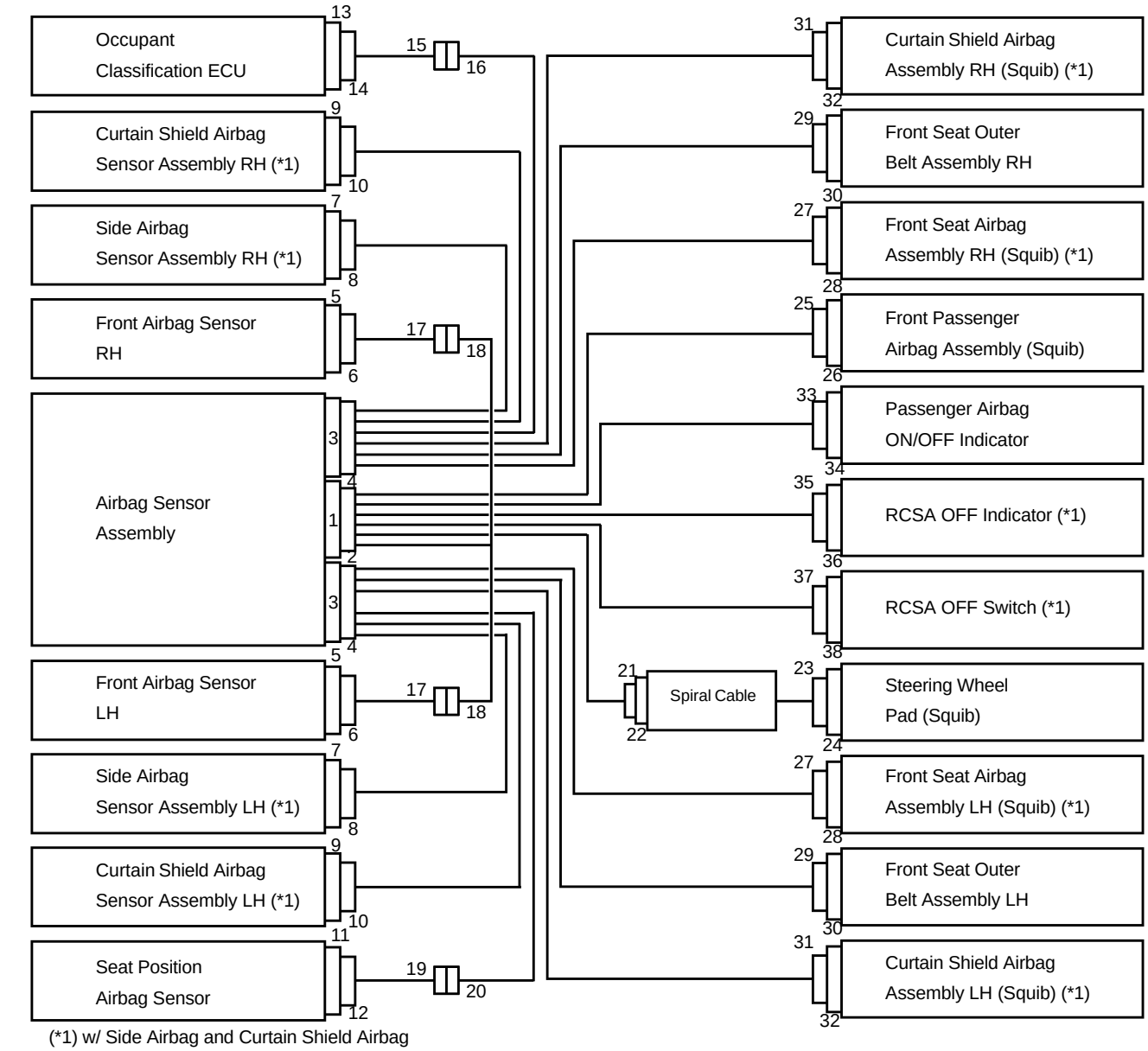

(*1) w/ Side Airbag and Curtain Shield Airbag

C

H24699

No.	Connector Type	Application
(1)	Terminal Twin−Lock Mechanism	Connectors 2, 4, 6, 8, 10, 18, 21, 25, 26, 27, 28, 31, 32
(2)	Activation Prevention Mechanism	Connectors 2, 4, 22, 24, 26, 28, 30, 32
(3)	Half Connection Prevention Mechanism	Connectors 6, 8, 10, 17, 21, 25, 27
(4)	Connector Lock Mechanism (1)	Connectors 23, 29
(5)	Connector Lock Mechanism (2)	Connectors 2, 4
(6)	Improper Connection Prevention Lock Mechanism	Connectors 1, 3

(a) All connectors in the SRS, except the seat position airbag sensor connector and occupant classification ECU connectors, are colored yellow to distinguish them from other connectors. These connectors have special functions, and are specially designed for the SRS. All SRS connectors use durable gold−plated terminals, and are placed in the locations shown on the previous page to ensure high reliability.

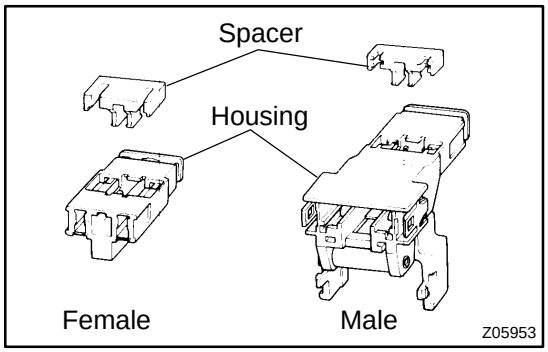

(1) Terminal Twin−Lock Mechanism
Each connector has a two−piece component consisting of a housing and a spacer. This design allows the terminal to be locked securely by two locking devices (the retainer and the lance) to prevent terminals from coming out.

(2) Activation Prevention Mechanism
Each connector contains a short spring plate. When the connector is disconnected, the short spring plate automatically connects the positive (+) terminal and negative (−) terminal of the squib.

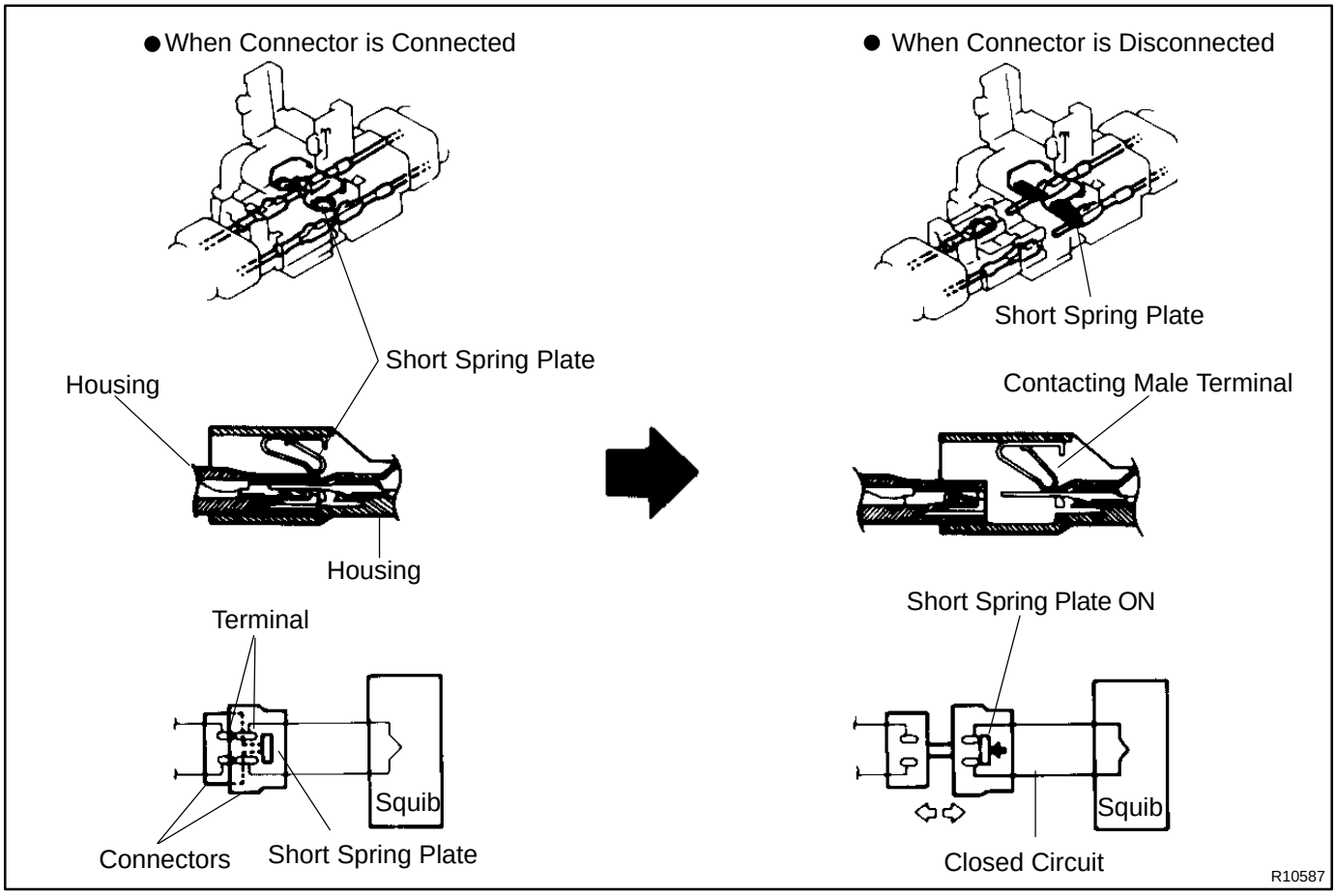

(3) Half connection prevention mechanism:
If the connector is not completely connected, the connector is disconnected due to the spring operation to the extent that no continuity exists.

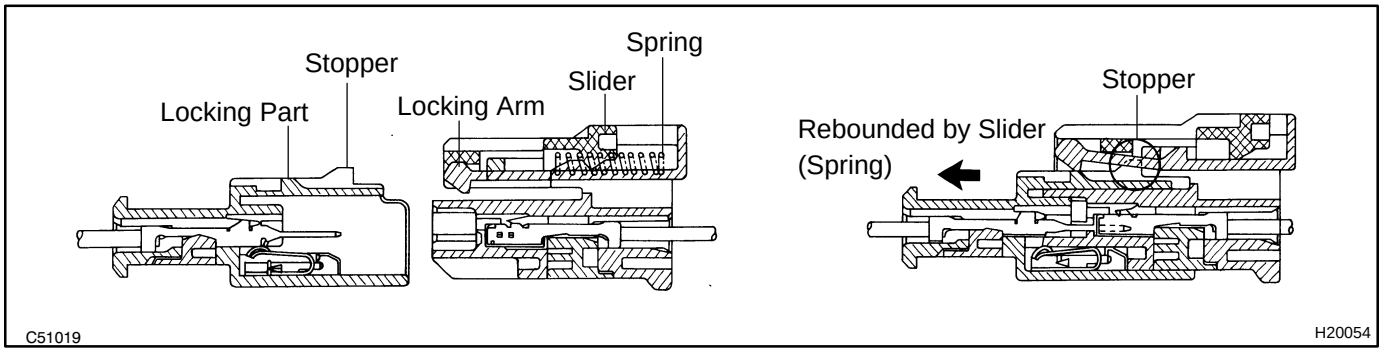

(4) Connector lock mechanism (1):
Locking the connector lock button securely connects the connector.

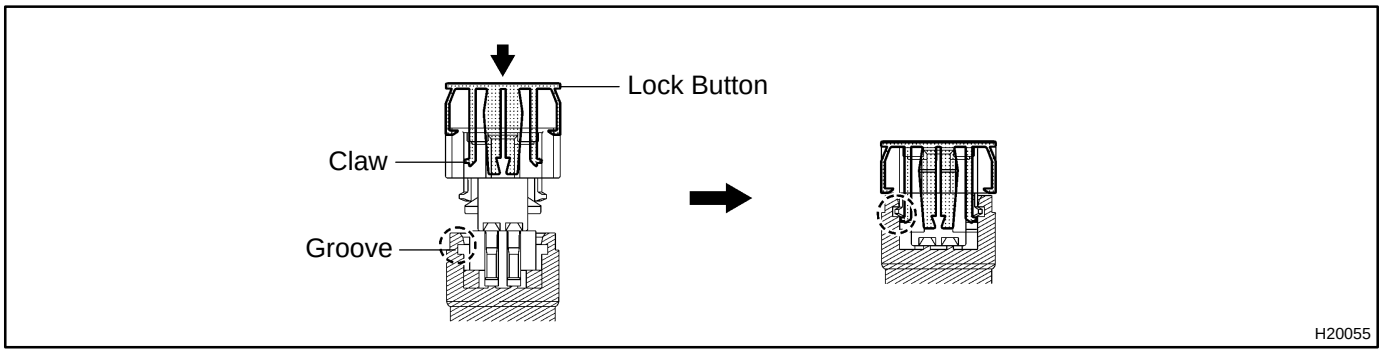

(5) Connector lock mechanism (2):
Both the primary lock with holder lances and the secondary lock with retainer prevent the connectors from becoming disconnected.

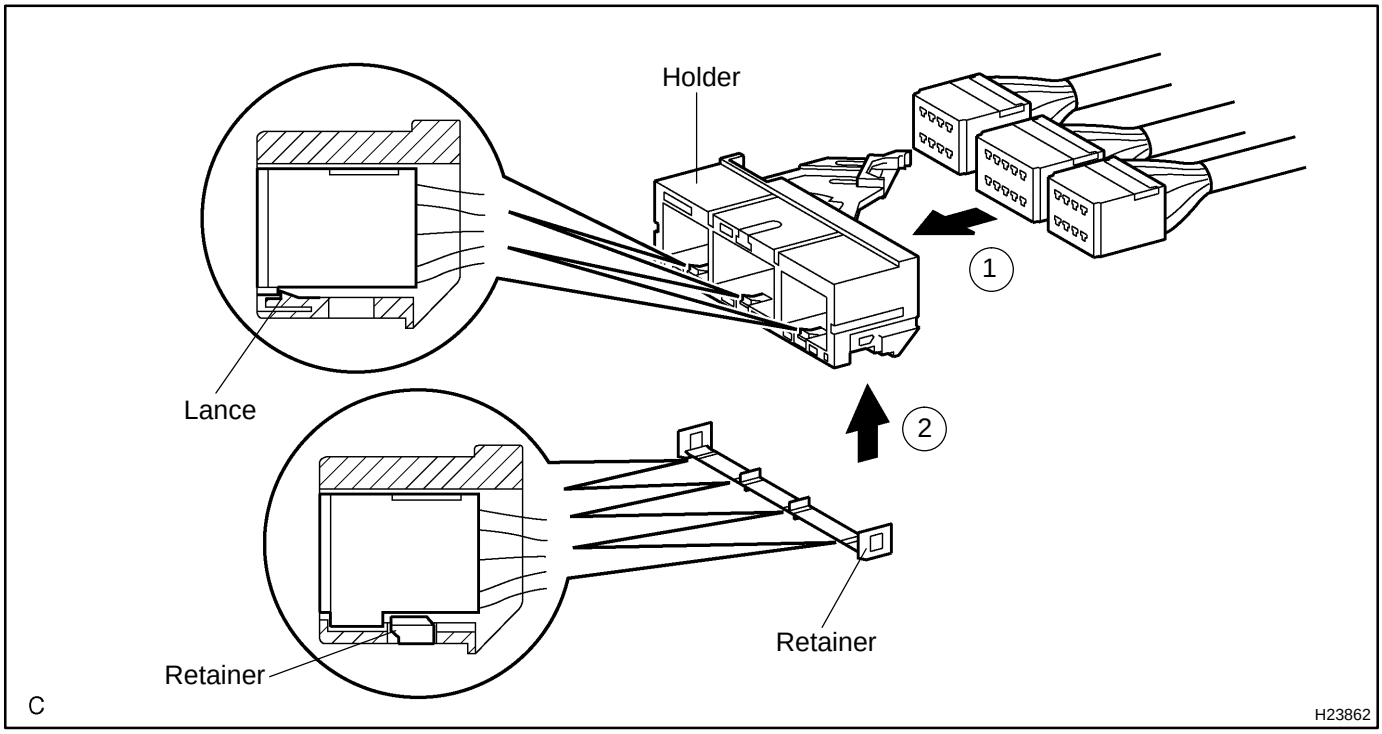

(6) Improper connection prevention lock mechanism:
When connecting the holder, the lever is pushed into the end by rotating around the A axis to lock the holder securely.

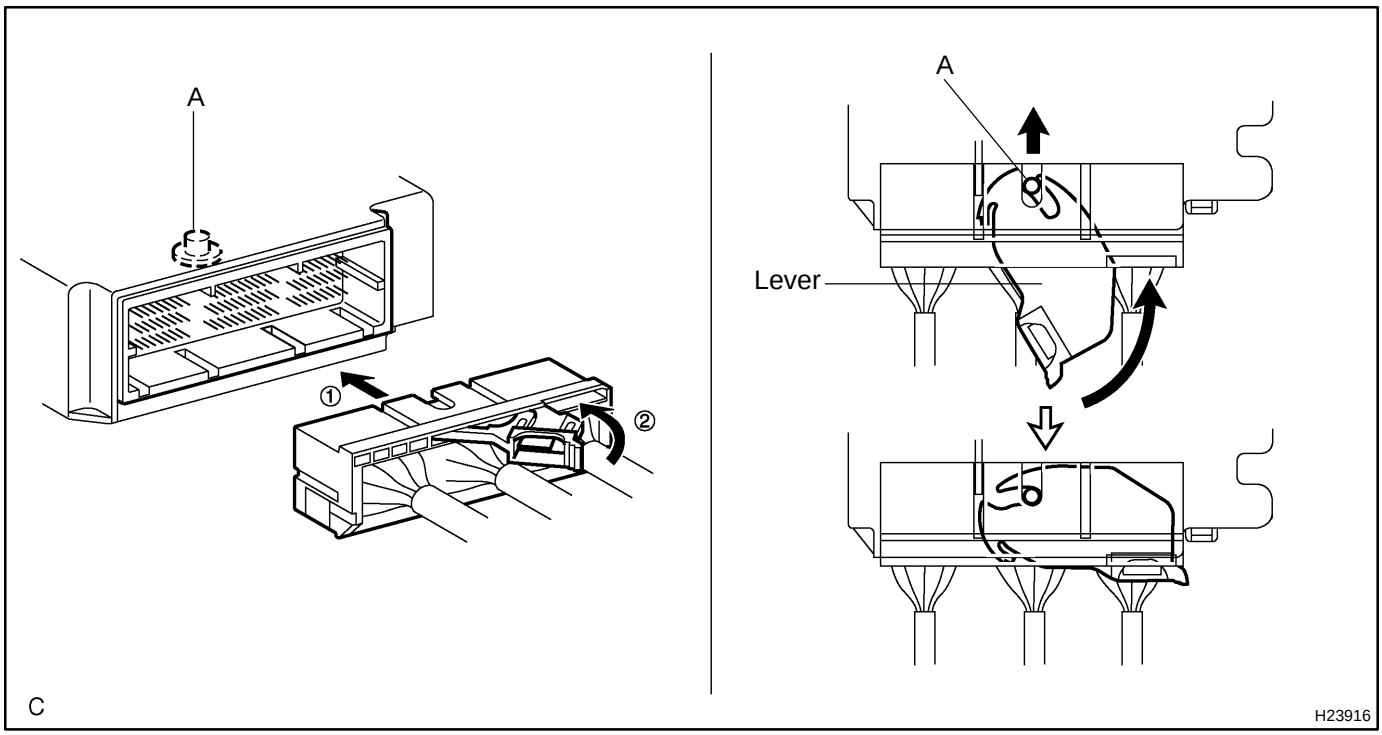

17. DISCONNECTION OF CONNECTORS FOR STEERING WHEEL PAD

(a) Release the lock button (yellow part) of the connector using a screwdriver.

(b) Insert the screwdriver tip between the connector and the base, and then raise the connector.

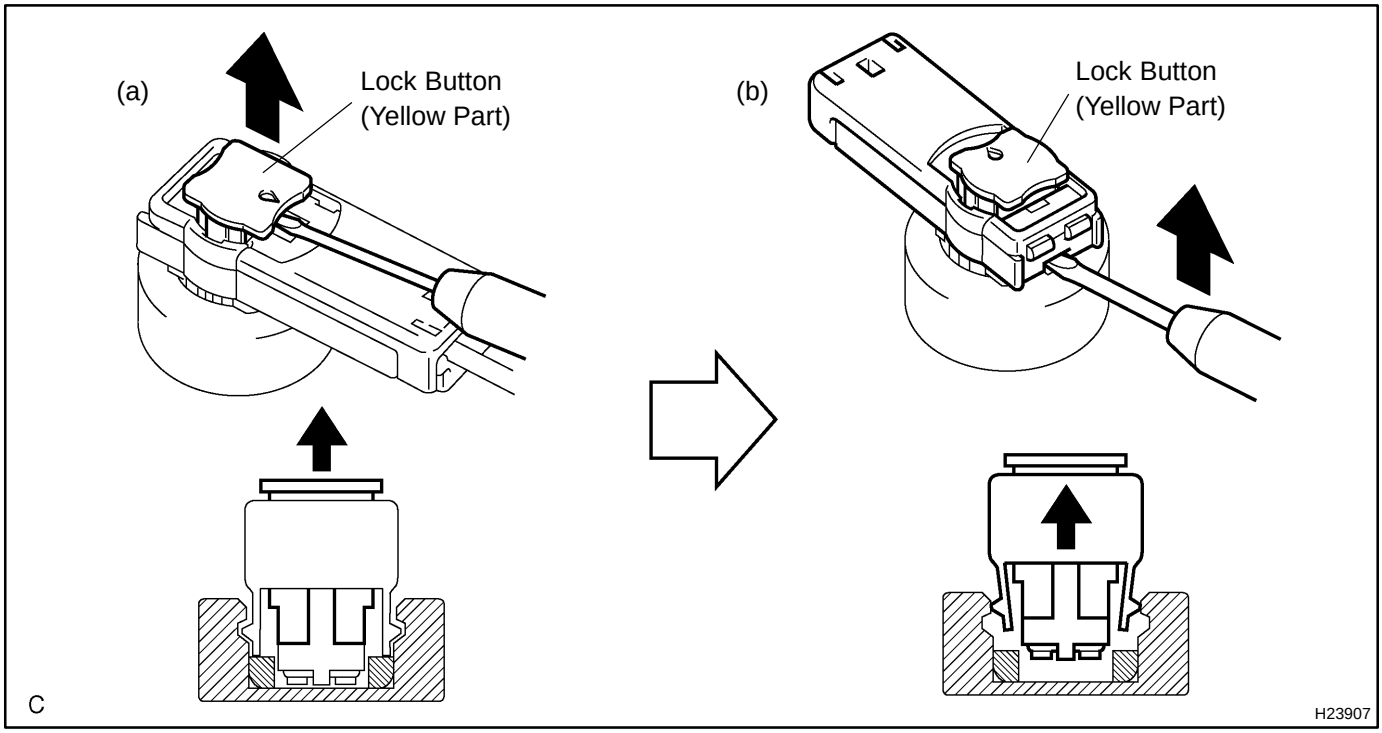

18. CONNECTION OF CONNECTORS FOR STEERING WHEEL PAD

(a) Connect the connector.

(b) Push down securely on the lock button (yellow part) of the connector. (When locking, a click sound can be heard.)

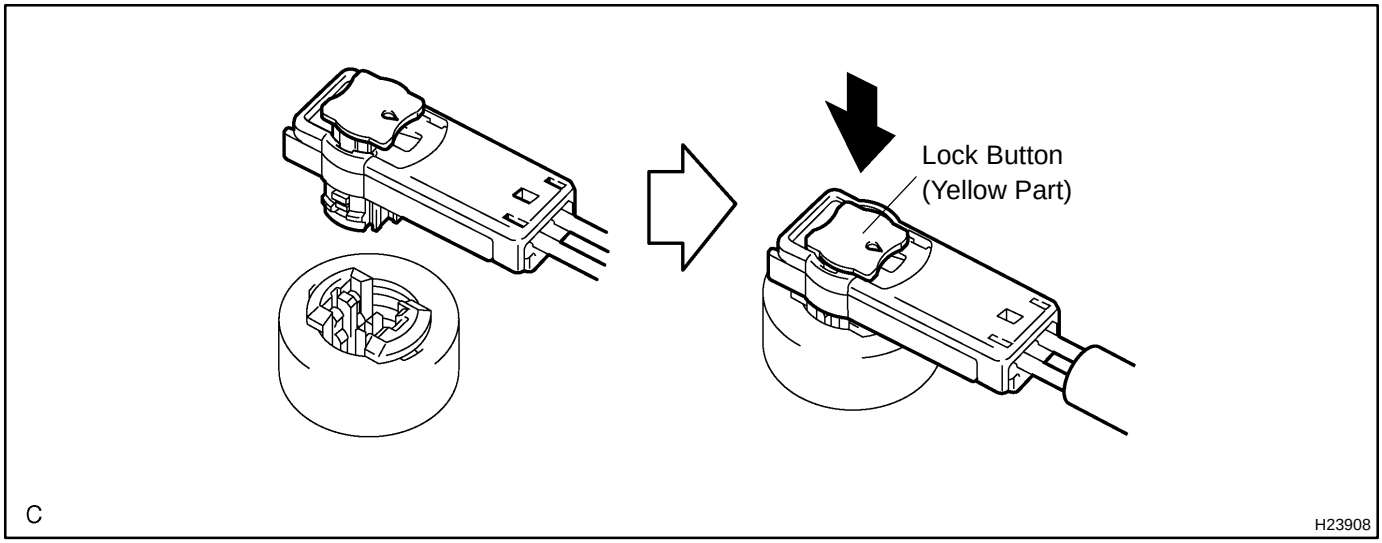

19. DISCONNECTION OF CONNECTORS FOR FRONT PASSENGER AIRBAG ASSEMBLY AND CURTAIN SHIELD AIRBAG ASSEMBLY

(a) Place a finger on the slider, slide the slider to release the lock, and then disconnect the connector.

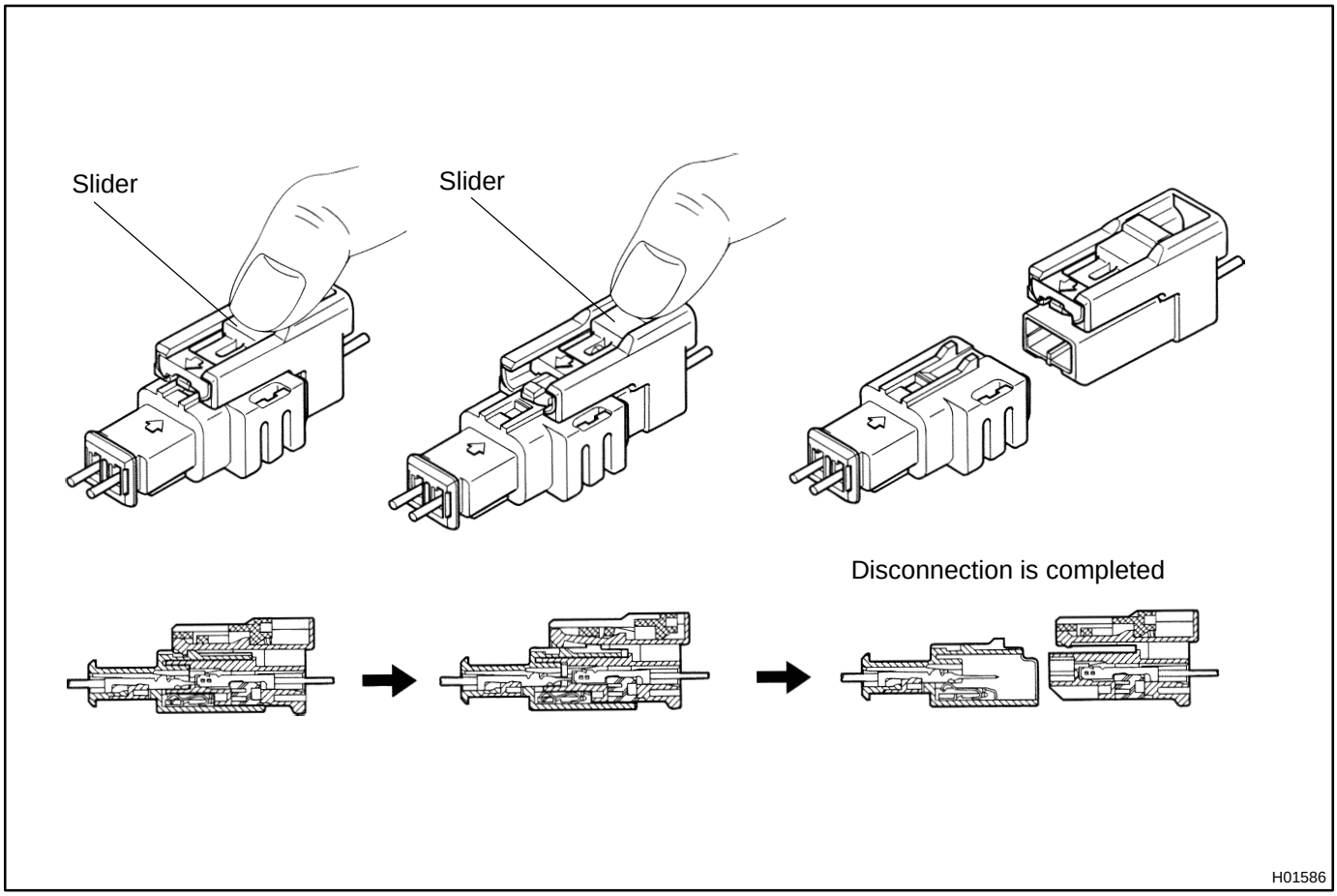

20. CONNECTION OF CONNECTORS FOR FRONT PASSENGER AIRBAG ASSEMBLY AND CURTAIN SHIELD AIRBAG ASSEMBLY

(a) Connect the connector as shown in the illustration. (When locking, make sure that the slider returns to its original position and a click sound can be heard.)

HINT:

When connecting, the slider will slide. Be sure not to touch the slider while connecting, as it may result in an insecure fit.

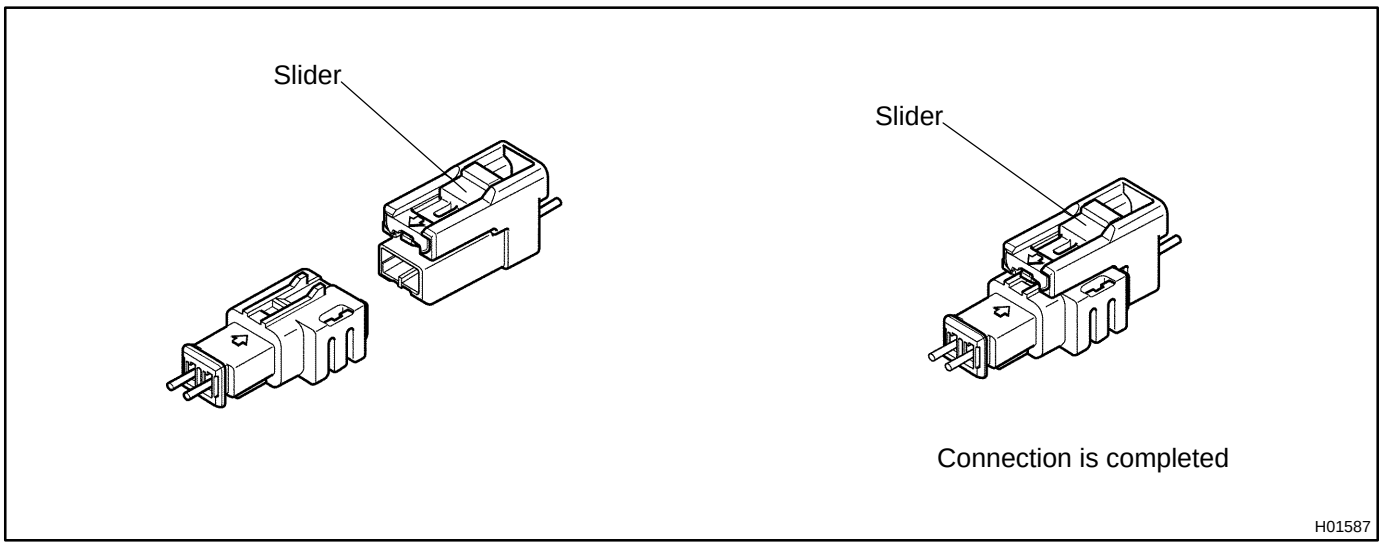

21. DISCONNECTION OF CONNECTOR FOR AIRBAG SENSOR ASSY CENTER

(a) Pull the lever by pushing part A as shown in the illustration and disconnect the holder (with connectors).

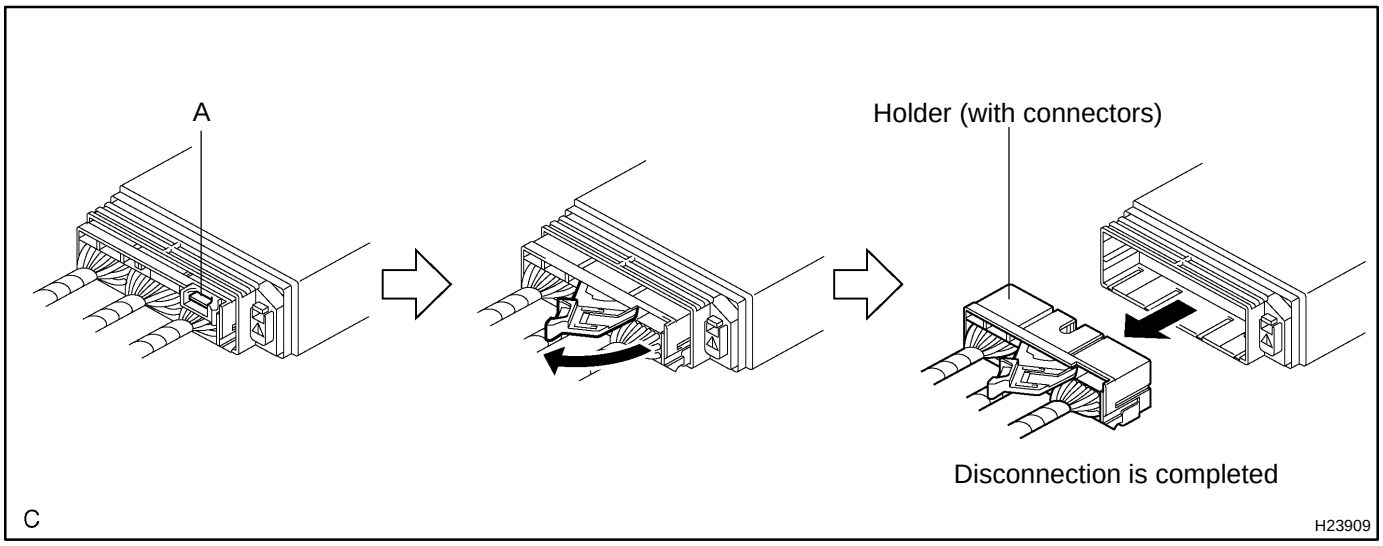

HINT:

Perform the following procedures when replacing the holder.

(b) Remove the holder.

(1) Using a screwdriver, unlock the retainer.

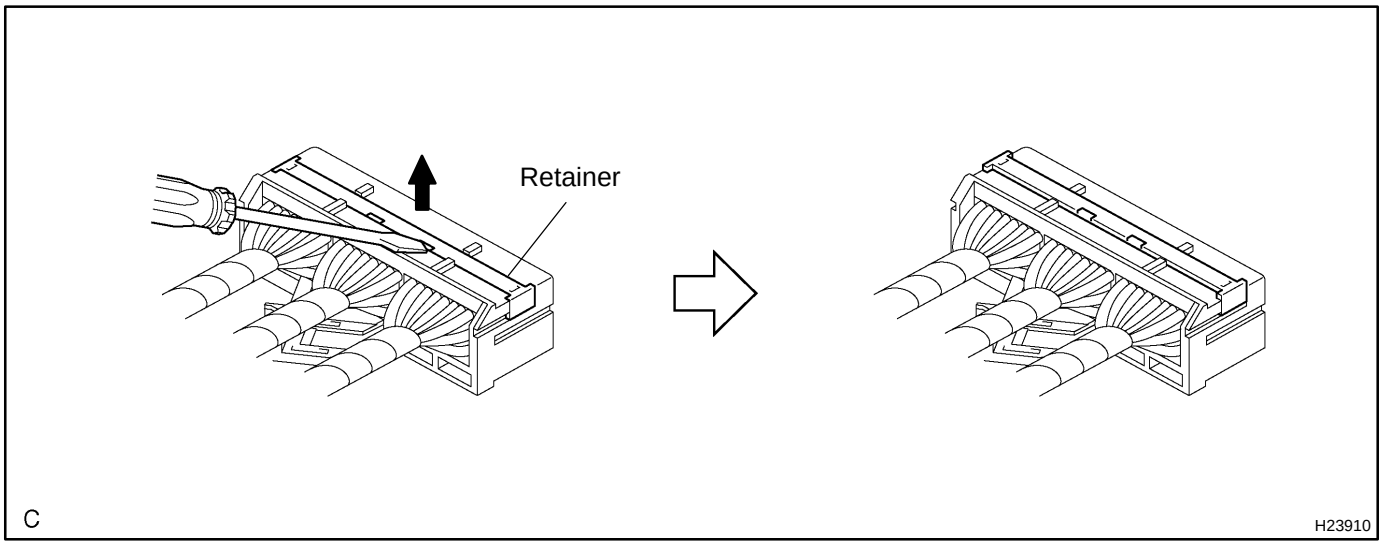

(2) Release the fitting lances and remove the holder.

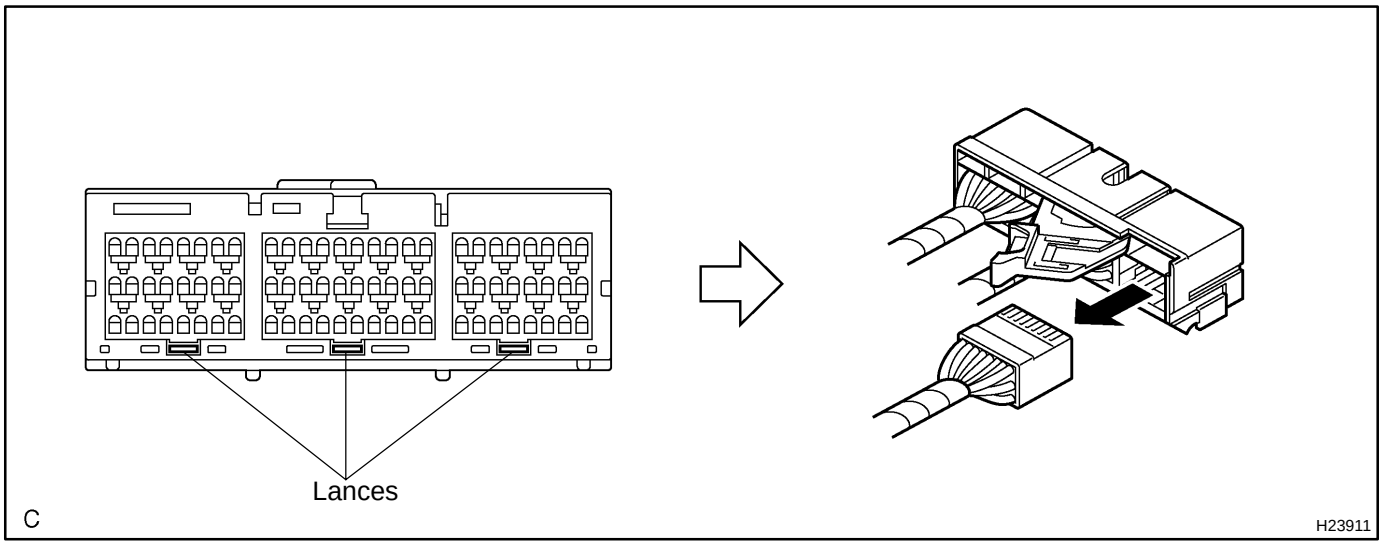

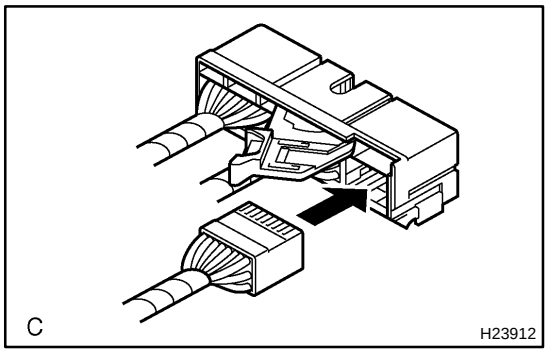

(c) Install the holder.
(1) Install the connectors to the holder. (When locking, a click sound can be heard.)

HINT:
The retainer is locked when the holder is connected.

22. CONNECTION OF CONNECTOR FOR AIRBAG SENSOR ASSY CENTER

(a) Firmly insert the holder (with connectors) until it can not be pushed any further.

(b) Push the lever to connect the holder (with connectors). (When locking, a click sound can be heard.)

HINT:

The holder slides when connecting. Be sure not to hold the holder while connecting, as it may result in an insecure fit.

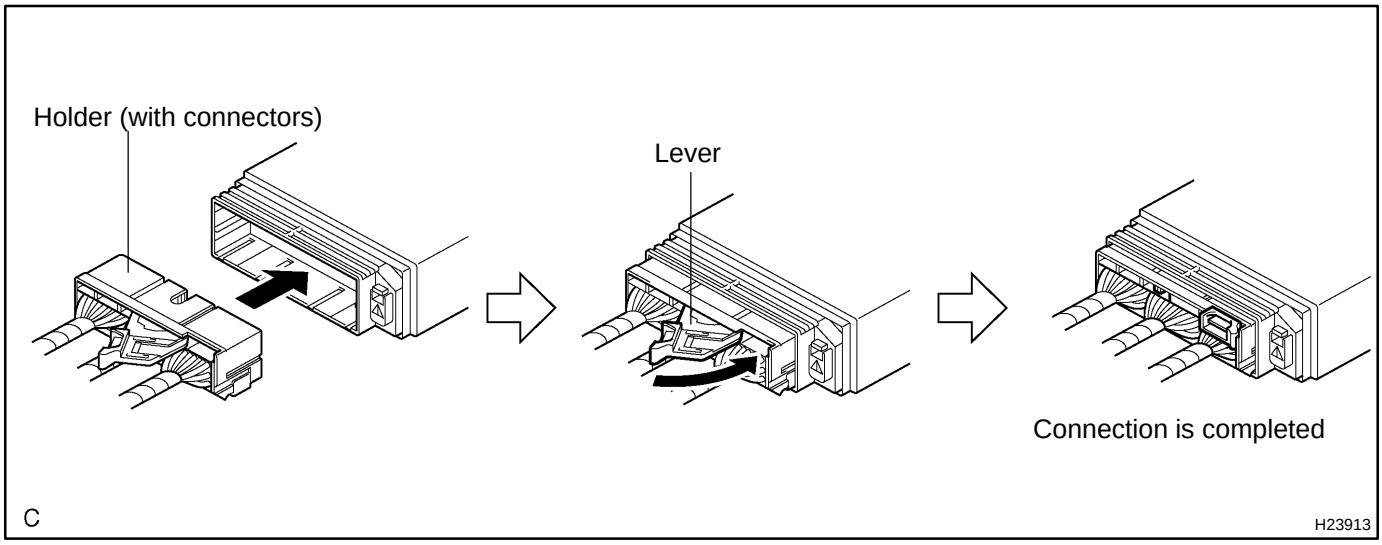

23. DISCONNECTION OF CONNECTOR FOR FRONT AIRBAG SENSOR

(a) Push down the housing lock (white part) and slide the CPA (yellow part). (At this time, the connector cannot be disconnected yet).

(b) Push down the housing lock (white part) again and disconnect the connector.

HINT:

Do not push down the A part shown in the illustration when disconnecting.

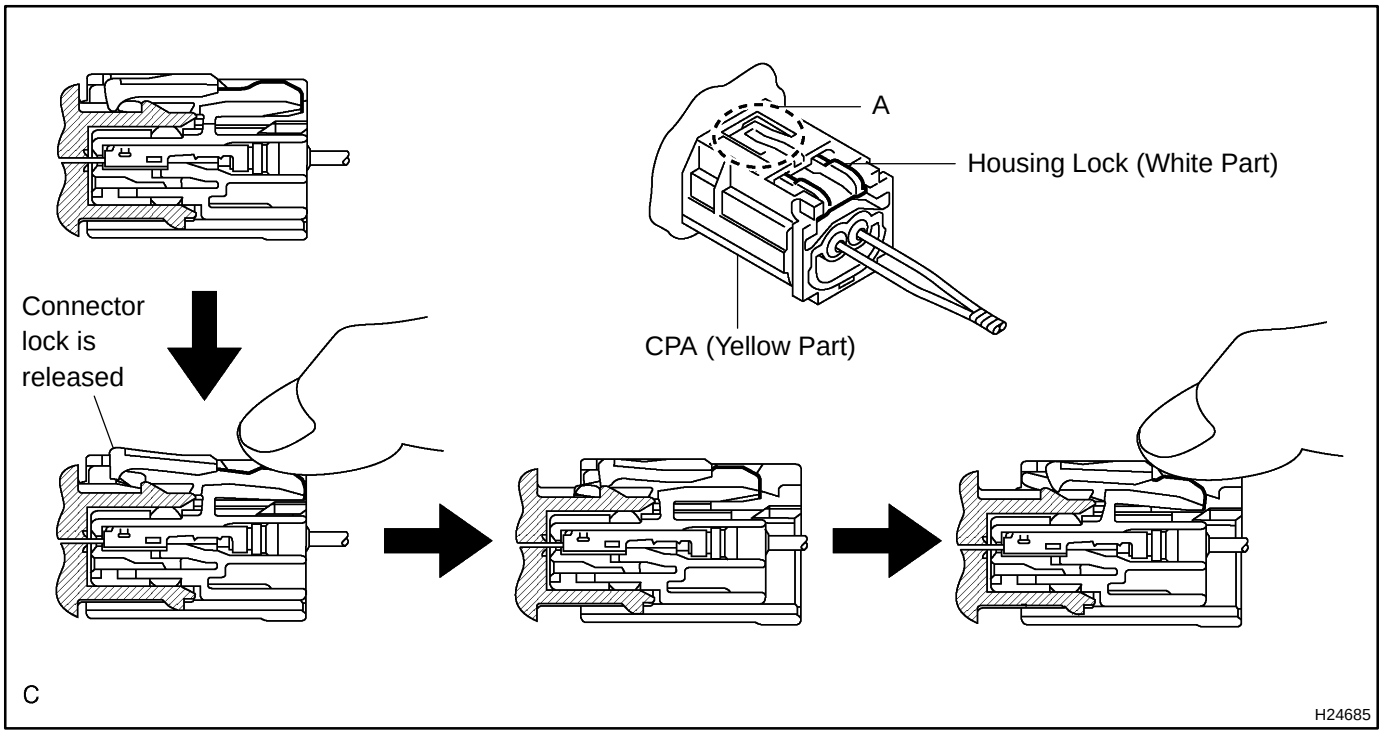

(c) After disconnecting the connector, check that the position of the housing lock (white part) is as shown in the illustration.

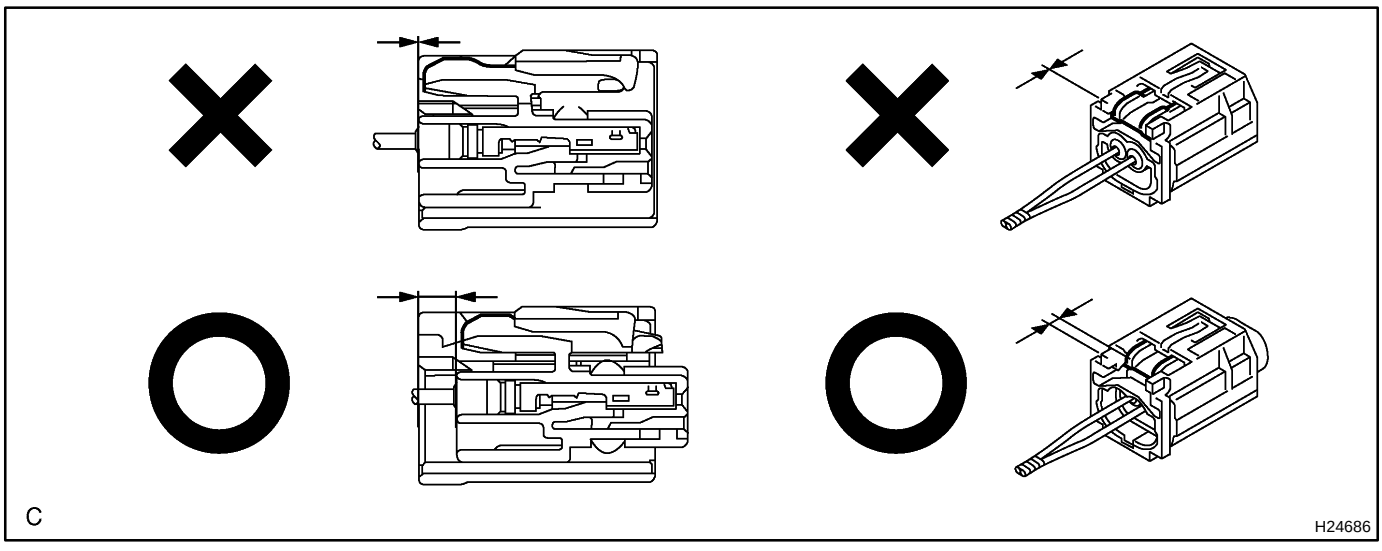

24. CONNECTION OF CONNECTOR FOR FRONT AIRBAG SENSOR

(a) Before connecting the connectors, check that the position of the housing lock (white part) is as shown in the illustration.

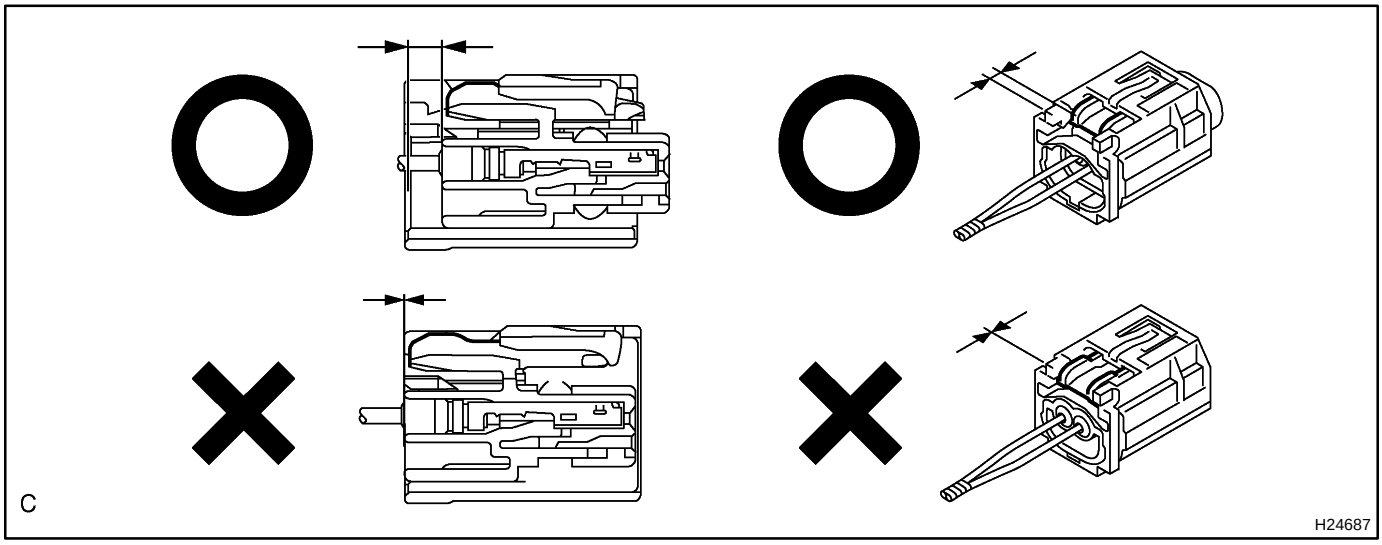

(b) Be sure to engage the connectors until they are locked. (When locking, make sure that a click sound can be heard.)

HINT:

When connecting them, the housing lock (white part) slides. Be sure not to hold the housing lock (white part) and A part, as it may result in an insecure fit.

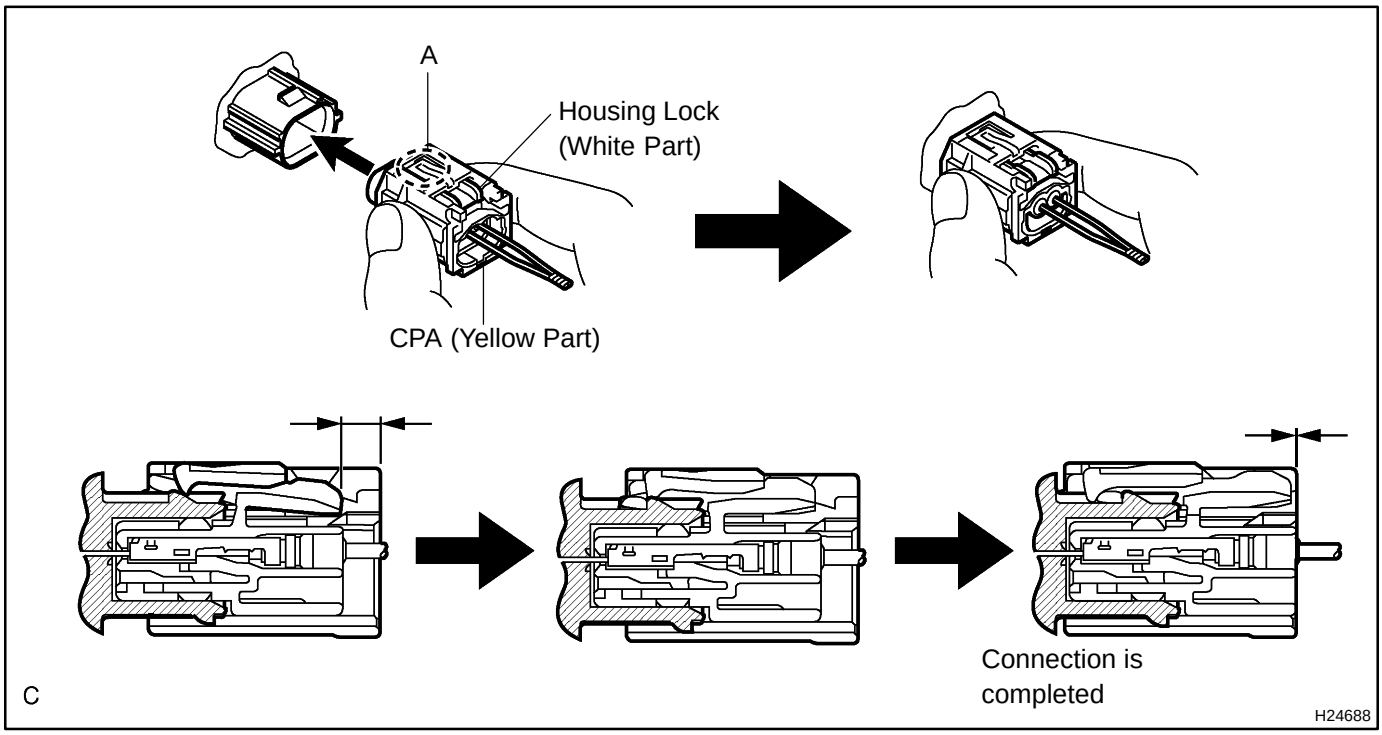

25. DISCONNECTION OF CONNECTOR FOR SIDE AIRBAG ASSEMBLY

(a) Place a finger on the slider, slide the slider to release the lock, and then disconnect the connector.

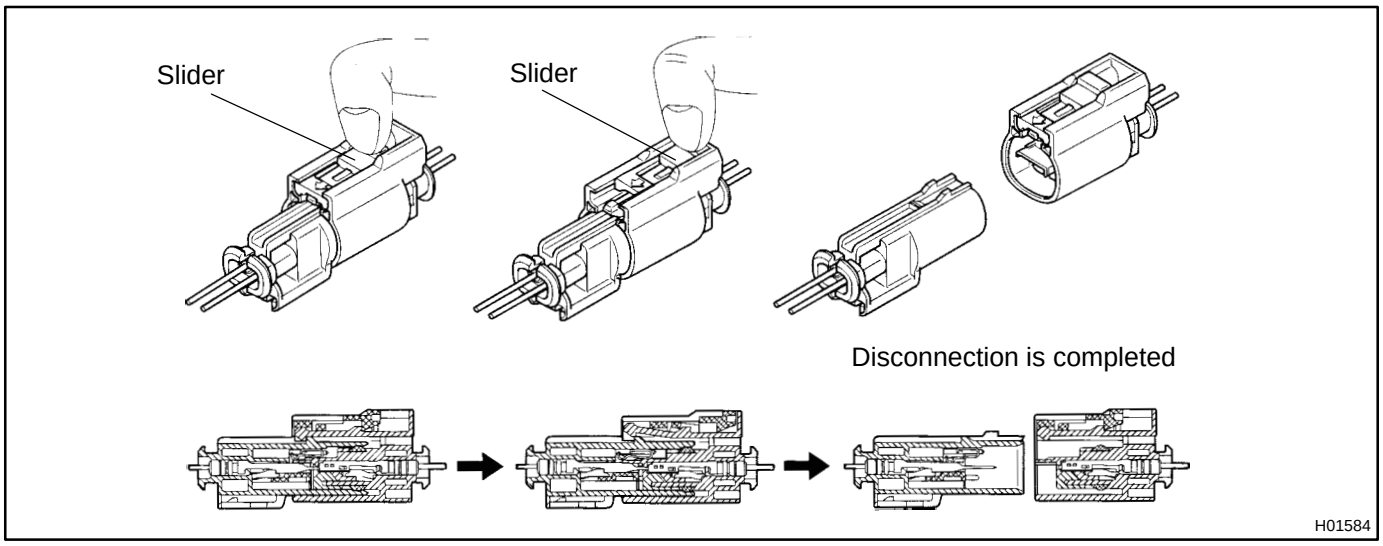

26. CONNECTION OF CONNECTOR FOR SIDE AIRBAG ASSEMBLY

(a) Connect the connector as shown in the illustration. (When locking, make sure that the slider returns to its original position and a click sound can be heard.)

HINT:

When connecting, the slider will slide. Be sure not to touch the slider while connecting, as it may result in an insecure fit.

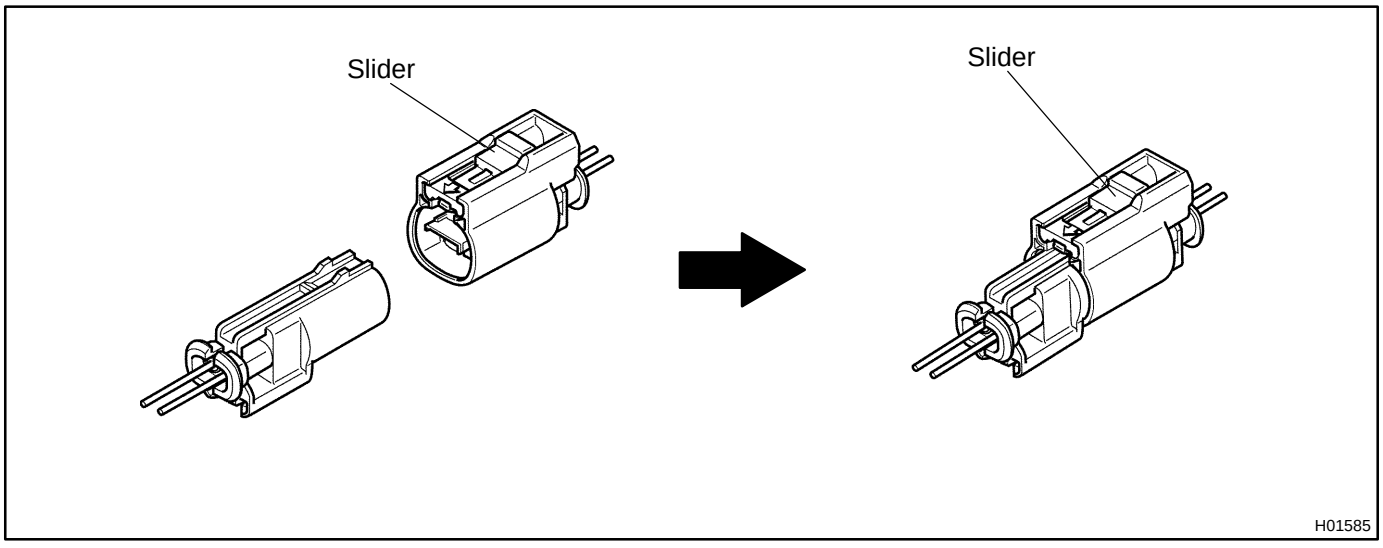

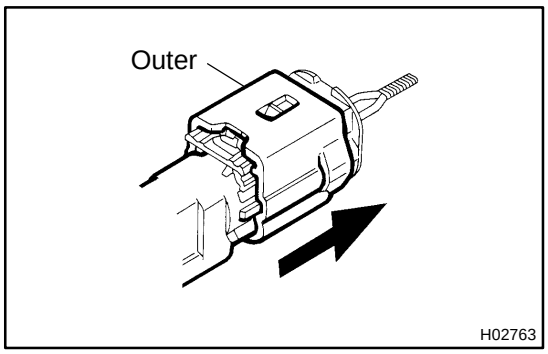

27. DISCONNECTION OF CONNECTORS FOR SIDE AIRBAG SENSOR AND CURTAIN SHIELD AIRBAG SENSOR

(a) While holding both outer flank sides, slide the outer in the direction shown by the arrow.

(b) When the connector lock is released, the connectors are disconnected.

HINT:

Be sure to hold both outer flank sides. Holding the top and bottom sides will make disconnection difficult.

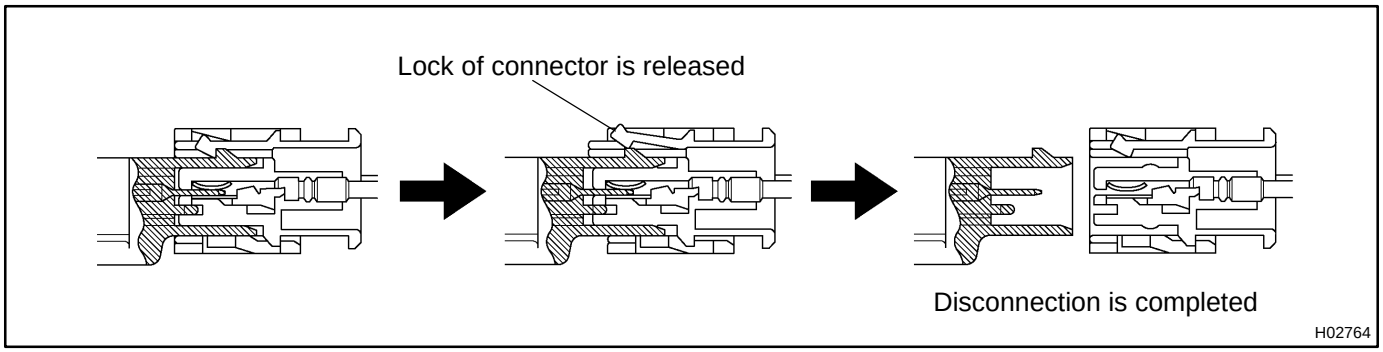

28. CONNECTION OF CONNECTORS FOR SIDE AIRBAG SENSOR AND CURTAIN SHIELD AIRBAG SENSOR

(a) Connect the connector as shown in the illustration. (When locking, make sure that the outer returns to its original position and a click sound can be heard.)

HINT:

When connecting, the outer will slide. Be sure not to hold the outer while connecting, as it may result in an insecure fit.

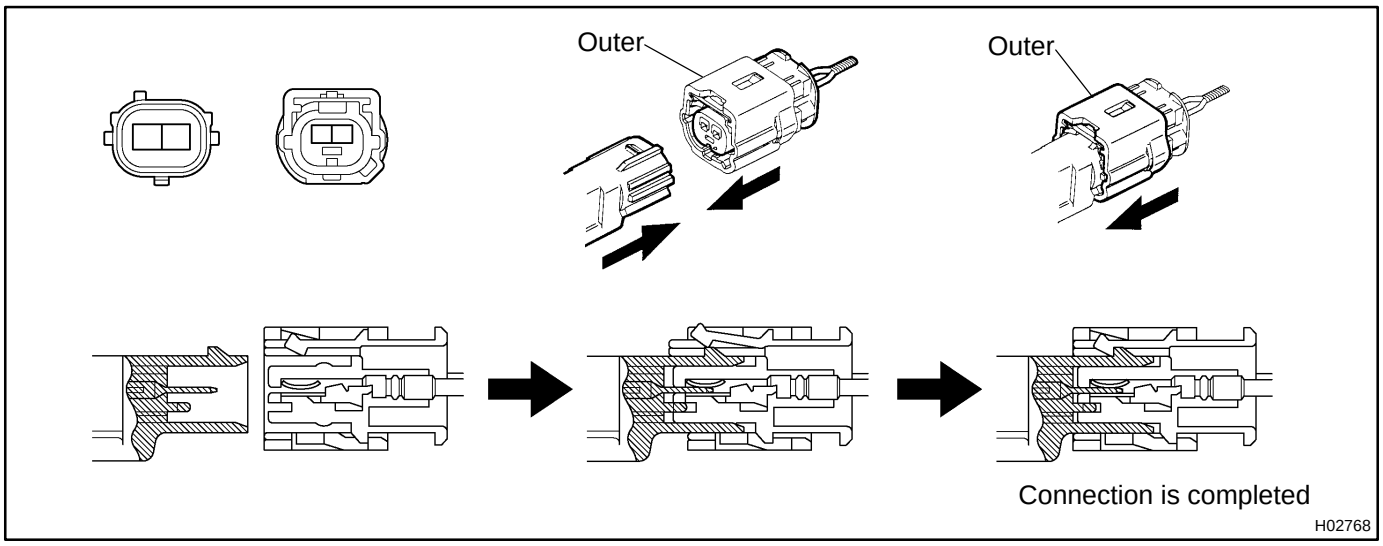

SRS AIRBAG

RS01Y−61

PRECAUTION

CAUTION:

- **The vehicle is equipped with SRS, which consists of a driver airbag, front passenger airbag, side airbag and curtain shield airbag. Failure to carry out service operations in the correct sequence could cause the SRS to unexpectedly deploy during servicing, possibly leading to a serious accident. Further, if a mistake is made in servicing the SRS, it is possible that the SRS may fail to operate when required. Before performing servicing (including removal or installation of parts, inspection or replacement), be sure to read the following items carefully, then follow the correct procedures indicated in the repair manual.**
- **Wait at least 90 seconds after the ignition switch is turned to the ”LOCK” position and the negative (−) terminal cable is disconnected from the battery.**
  (The SRS is equipped with a back−up power source, so that if work is started within 90 seconds after disconnecting the negative (−) terminal cable of the battery, the SRS may be deployed.)
- **Do not expose the steering wheel pad, front passenger airbag assembly, side airbag assembly, curtain shield airbag assembly, airbag sensor assembly, front airbag sensor, side airbag sensor assembly, curtain shield airbag sensor assembly, seat position sensor assembly or occupant classification ECU directly to hot air or flames.**
- **Be sure to perform the initialization of the occupant classification ECU if any of the following conditions occur (see page DI−1829). If the initialization is not performed, the SRS may not operate properly.**
  - **The occupant classification ECU is replaced.**
  - **Accessories (seatback tray, seat cover, etc.) are installed to the vehicle.**
  - **The passenger seat is removed from the vehicle, and then reinstalled or replaced.**
  - **The passenger airbag ON/OFF indicator light (”OFF”) comes on when the passenger seat is not occupied.**
  - **The vehicle is brought to the workshop for repair due to an accident or collision.**

HINT:

The sensitivity check method differs according to the front seat type/separate seat and bench seat, split seat)

NOTICE:

- **Malfunction symptoms of the SRS are difficult to confirm, so DTCs are the most important source of information when troubleshooting. When troubleshooting the SRS, always inspect DTCs before disconnecting the battery.**
- **Even in the case of a minor collision when the SRS does not deploy, the steering wheel pad, front passenger airbag assembly, side airbag assembly, curtain shield airbag assembly, airbag sensor assembly, front airbag sensor, side airbag sensor assembly, curtain shield airbag sensor assembly, seat position sensor assembly and occupant classification ECU should be inspected. (see page RS−24, RS−38, RS−52, RS−67, RS−77, RS−85, RS−97, RS−102, RS−107, RS−112, RS−120 and RS−126).**
- **Before repair work, remove the airbag sensor if any kind of shock is likely to occur to the airbag sensor during the operation.**
- **Never use SRS parts from another vehicle. When replacing the parts, replace them with new ones.**
- **Never disassemble or repair the steering wheel pad, front passenger airbag assembly, side airbag assembly, curtain shield airbag assembly, airbag sensor assembly, front airbag sensor, side airbag sensor assembly, curtain shield airbag sensor assembly, seat position sensor assembly or occupant classification ECU in order to reuse it.**

- **If the steering wheel pad, front passenger airbag assembly, side airbag assembly, curtain shield airbag assembly, airbag sensor assembly, front airbag sensor, side airbag sensor assembly, curtain shield airbag sensor assembly, seat position sensor assembly or occupant classification ECU has been dropped, or if there are any cracks, dents or other defects in the case, bracket or connector, replace it with a new one.**
- **Use a volt/ohmmeter with high impedance (10 kΩ/V minimum) for troubleshooting the electrical circuits.**
- **Information labels are attached to the periphery of the SRS components. Follow the instructions in the caution.**
- **After work on the SRS is completed, perform the SRS warning light check (see page DI−1839).**
- **When the negative (−) terminal cable is disconnected from the battery, the memory will be cleared. Because of this, be sure to make a record of the contents memorized in each system before starting work. When work is finished, adjust each system as it was before. Never use a back−up power supply from outside the vehicle to avoid erasing the memory in any system.**

STEERING WHEEL PAD AND SPIRAL CABLE

COMPONENTS

RS00Y−59

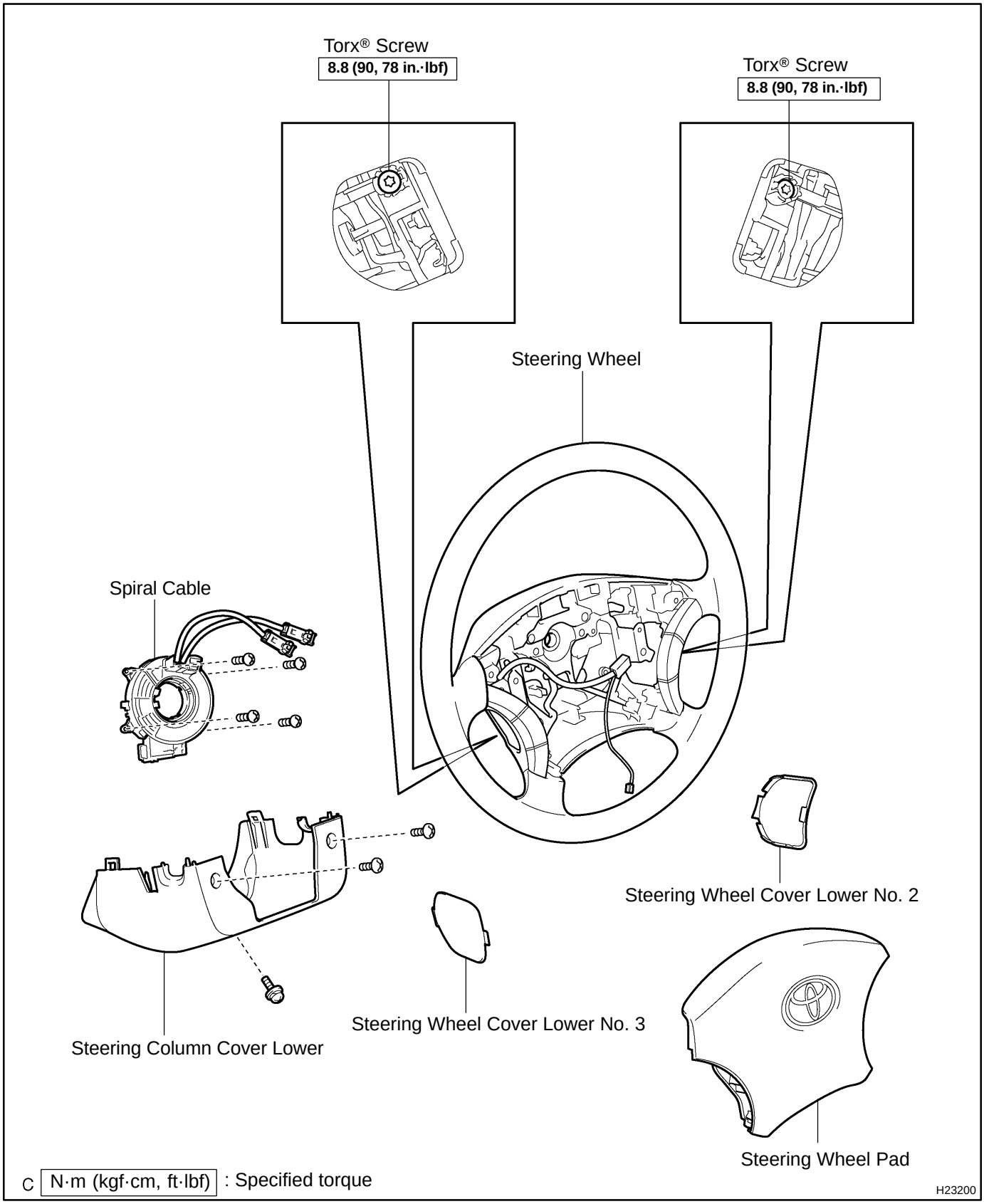

DISPOSAL

HINT:

When scrapping a vehicle equipped with SRS or disposing of the steering wheel pad, be sure to deploy the airbag first in accordance with the procedure described below. If any abnormality occurs with the airbag deployment, contact the SERVICE DEPT. of TOYOTA MOTOR SALES, USA, INC.

CAUTION:

- **Never dispose of a steering wheel pad which has an undeployed airbag.**
- **The airbag produces an exploding sound when it is deployed, so perform the operation outdoors and where it will not create a nuisance to nearby residents.**

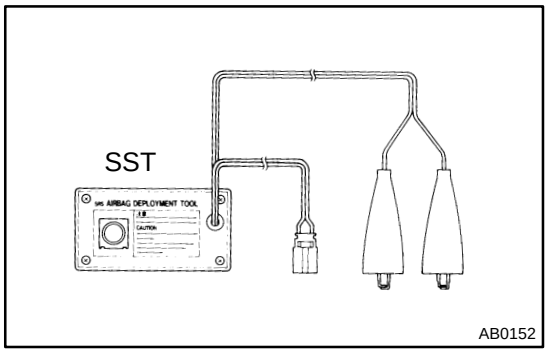

- **When deploying the airbag, always use the specified SST (SRS Airbag Deployment Tool). Perform the operation in a place away from electrical noise.**
- **When deploying an airbag, perform the operation at least 10 m (33 ft) away from the steering wheel pad.**
- **The steering wheel pad becomes extremely hot when the airbag is deployed, so do not touch it for at least 30 minutes after deployment.**
- **Use gloves and safety glasses when handling a steering wheel pad with a deployed airbag.**
- **Do not apply water, etc. to a steering wheel pad with a deployed airbag.**
- **Always wash your hands with water after completing the operation.**

1. AIRBAG DEPLOYMENT WHEN SCRAPPING VEHICLE

HINT:

Prepare a battery as the power source to deploy the airbag.

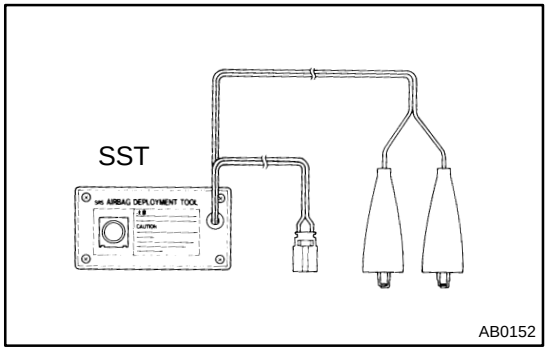

(a) Check the function of the SST.

SST 09082−00700

CAUTION:

When deploying the airbag, always use the specified SST: SRS Airbag Deployment Tool.

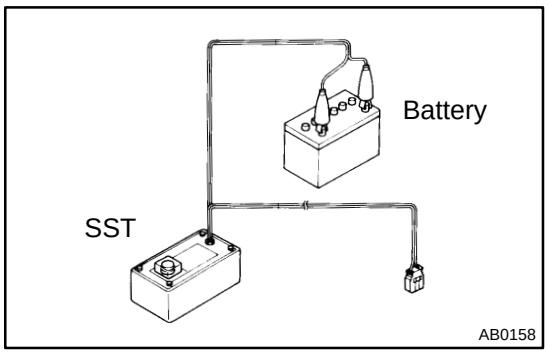

(1) Connect the SST to the battery.
Connect the red clip of the SST to the battery positive (+) terminal and the black clip to the battery negative (−) terminal.

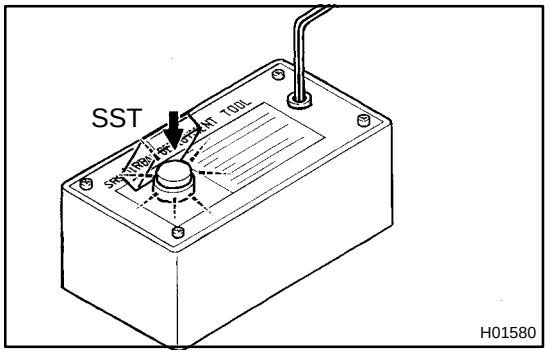

(2) Check the function of the SST.
Press the SST activation switch, and check that the LED of the SST activation switch comes on.

CAUTION:

- **Do not connect the SST connector (yellow colored one) to the airbag.**
- **If the LED comes on when the activation switch is not being pressed, SST malfunction is possible, so replace the SST with a new one.**

(3) Disconnect the SST from the battery.

(b) Precaution (see page RS−1 and RS−3).

(c) Disconnect the cable from the negative battery terminal.
Wait for 90 seconds after disconnecting the cable to prevent the airbag working.

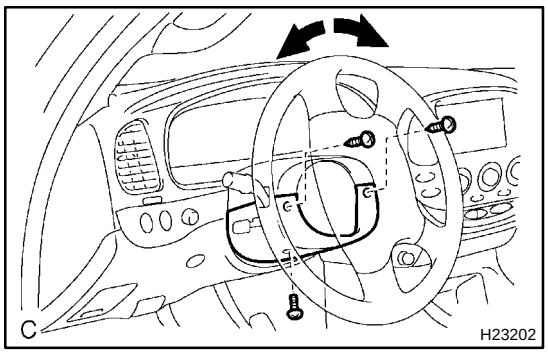

(d) Remove the steering column cover lower.

(1) While turning the steering wheel assembly to the right and left, remove the 3 screws and steering column cover lower.

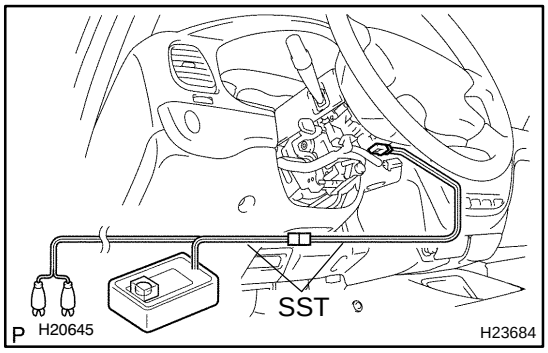

(e) Install the SST.

CAUTION:

Check that there is no looseness in the steering wheel assembly and steering wheel pad.

(1) Disconnect the airbag connector (yellow colored one) from the spiral cable.

NOTICE:

When handling the airbag connector, take care not to damage the airbag wire harness.

(2) Connect the SST connector to the airbag connector of the spiral cable.

SST 09082−00700, 09082−00780

NOTICE:

To avoid damaging the SST connector and wire harness, do not lock the secondary lock of the twin lock.

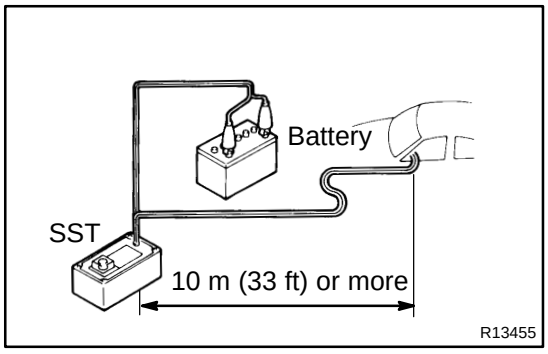

(3) Move the SST at least 10 m (33 ft) away from the vehicle front side window.

(4) Maintaining enough clearance for the SST wire harness in the front side window, close all doors and windows of the vehicle.

NOTICE:

Take care not to damage the SST wire harness.

(5) Connect the red clip of the SST to the battery positive (+) terminal and the black clip of the SST to the negative (−) terminal.

(f) Deploy the airbag.

(1) Check that no one is inside the vehicle or within a 10 m (33 ft) radius of the vehicle.

(2) Press the SST activation switch and deploy the airbag.

CAUTION:

- **When deploying the airbag, make sure that no one is near the vehicle.**
- **The steering wheel pad becomes extremely hot when the airbag is deployed, so do not touch it for at least 30 minutes after deployment.**
- **Use gloves and safety glasses when handling a steering wheel pad with a deployed airbag.**
- **Do not apply water, etc. to a steering wheel pad with a deployed airbag.**
- **Always wash your hands with water after completing the operation.**

2. DEPLOYMENT WHEN DISPOSING OF STEERING WHEEL PAD ONLY

NOTICE:

- **When disposing of the steering wheel pad, never use the customer’s vehicle to deploy the airbag.**
- **Be sure to follow the procedure given below when deploying the airbag.**

HINT:

Prepare a battery as the power source to deploy the airbag.

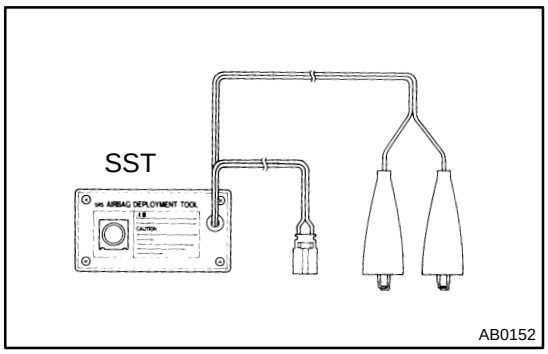

(a) Check the function of the SST (see step 1−(a)).
(b) Remove the steering wheel pad (see page RS−23).

CAUTION:

- **When removing the steering wheel pad, work must be started 90 seconds after the ignition switch is turned to the "LOCK" position and the negative (−) terminal cable is disconnected from the battery.**
- **When storing the steering wheel pad, keep the airbag deployment side facing upward.**

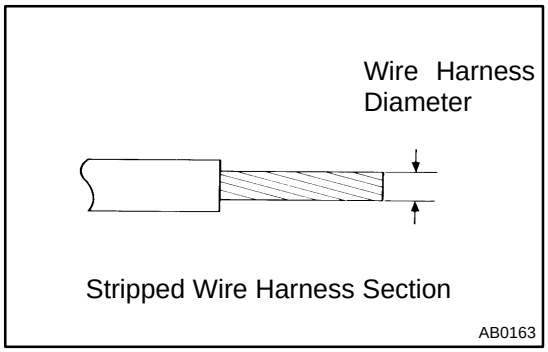

(c) Using a service−purpose wire harness for the vehicle, tie down the steering wheel pad to the disc wheel.
Wire harness: Stripped wire harness section 1.25 mm^2 or more (0.0019 in^2. or more)

CAUTION:

If the wire harness is too thin or an alternative object is used to tie down the steering wheel pad, it may be snapped by the shock when the airbag is deployed. Always use a wire harness for vehicle use with an area of at least 1.25 mm^2 (0.0019 $in.^2$).

HINT:

To calculate the area of the stripped wire harness section:

Area = 3.14 x (Diameter)^2 divided by 4

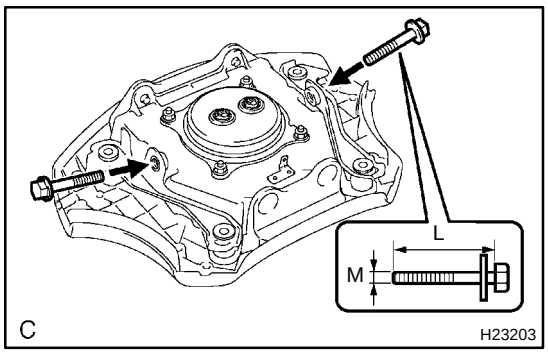

(1) Install the 2 bolts with washers into the 2 bolt holes on the steering wheel pad.

Bolt:
L: 35.0 mm (1.378 in.)
M: 6.0 mm (0.236 in.)
Pitch: 1.0 mm (0.039 in.)

NOTICE:

- **Tighten the bolts by hand until the bolts become difficult to turn.**
- **Do not tighten the bolts excessively.**

(2) After connecting the SST below to each other, connect them to the steering wheel pad connectors.

SST 09082−00802 (09082−10801, 09082−30801)

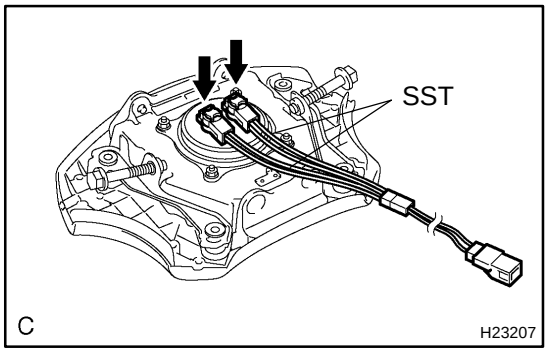

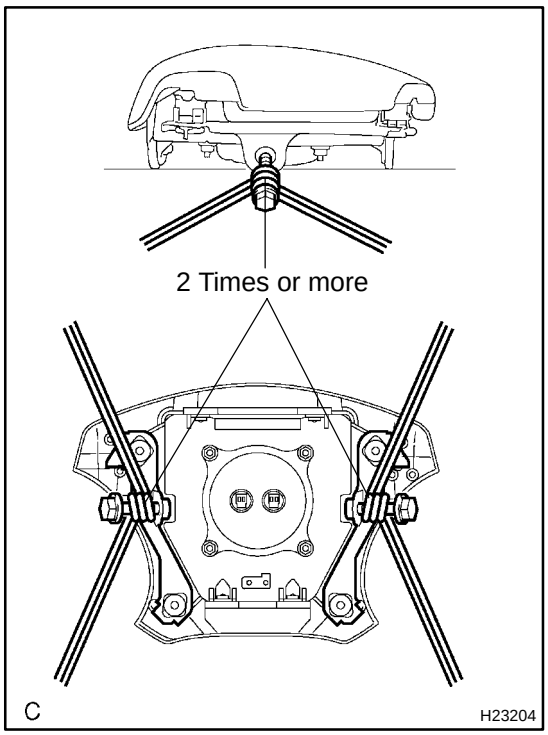

(3) Using 3 wire harnesses, wind wire harness at least 2 times each around the bolts installed on the left and right sides of the steering wheel pad.

CAUTION:

- **Tightly wind the wire harness around the bolts so that there is no slack.**
- **Make sure that the wire harness is tight. If there is slack in wire harness, the steering wheel pad may become loose due to the shock when the airbag is deployed.**

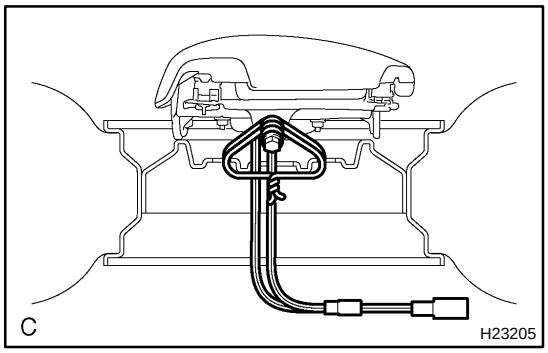

(4) Face the airbag deployment side of the steering wheel pad upward. Separately tie the left and right sides of the steering wheel pad to the disc wheel through the hub nut holes. Position the SST connector so that it hangs downward through the hub hole in the disc wheel.

CAUTION:

- **Make sure that the wire harness is tight. If there is slack in wire harness, the steering wheel pad may become loose due to the shock when the airbag is deployed.**
- **Always tie down the steering wheel pad with the airbag deployment side facing upward.**

NOTICE:

The disc wheel will be marked by the airbag deployment, so use an extra disc wheel.

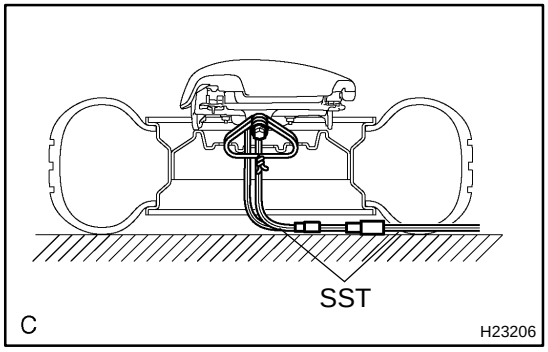

(d) Install the SST.

CAUTION:

Place the disc wheel on level ground.

(1) Connect the SST connector.

SST 09082−00700

CAUTION:

To avoid damaging the SST connector and wire harness, do not lock the secondary lock of the twin lock. Also, secure some slack for the SST wire harness inside the disc wheel.

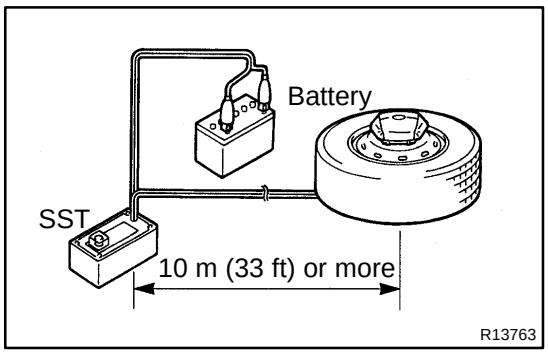

(2) Move the SST at least 10 m (33 ft) away from the steering wheel pad tied down to the disc wheel.

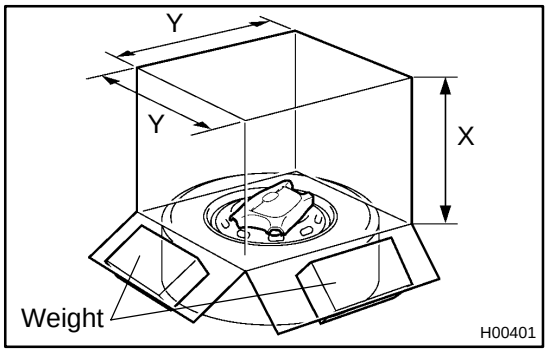

(e) Cover the steering wheel pad with a cardboard box or tires.

Covering method using a cardboard box:

Cover the steering wheel pad with the cardboard box and place weights on the cardboard box in 4 places totalling at least 190 N (19 kg, 43 lb).

Cardboard box size:

Must exceed the following dimensions:

X = 460 mm (18.11 in.)

Y = 650 mm (25.59 in.)

NOTICE:

- **When dimension Y of the cardboard box exceeds the diameter of the disc wheel with tire which the steering wheel pad is tied to, X should be the following size.**
  X = 460 mm (18.11 in.) + width of tire
- **If a cardboard box whicn is smaller than the specified size is used, the cardboard box will be broken by the shock from the airbag deployment.**

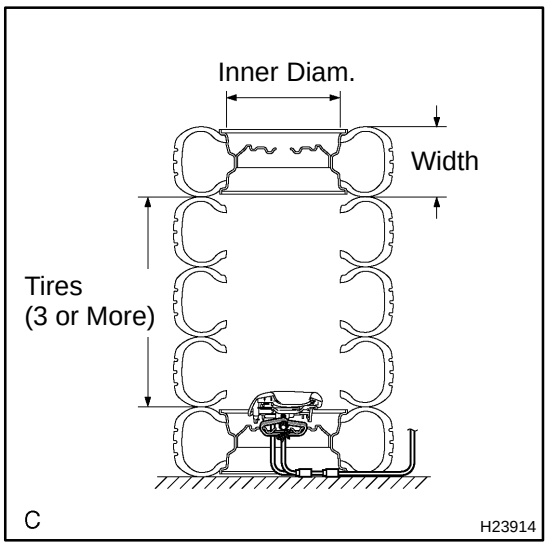

- Covering method using tires:
  Place at least 3 tires without disc wheels on the tire with disc wheel which the steering wheel pad is tied to. Place the tire with disc wheel on them.

Tire size: Must exceed the following dimensions:

Width: 185 mm (7.28 in.)

Inner diameter: 360 mm (14.17 in.)

CAUTION:

Do not use tires with disc wheels except on the top and bottom.

NOTICE:

- **The tires may be marked by the airbag deployment, so use the redundant tires.**
- **Do not place the SST connector under the tire because it could be damaged.**

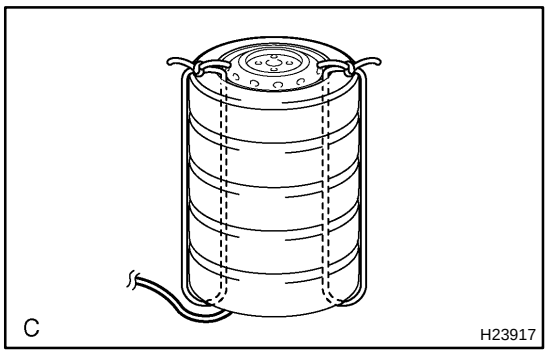

(1) Tie the tires together with 2 wire harnesses.

CAUTION:

Make sure that the wire harness is tight. Looseness in the wire harness results in the tires coming free due to the shock when the airbag is deployed.

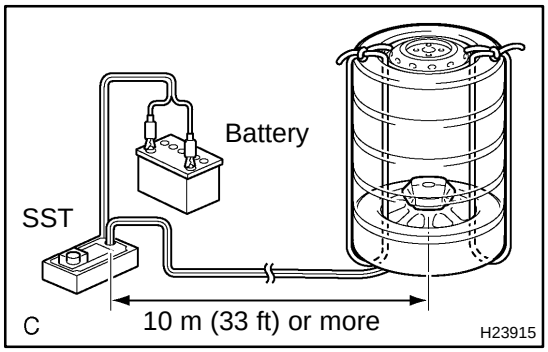

(f) Deploy the airbag.

(1) Connect the red clip of the SST to the battery positive (+) terminal and the black clip of the SST to the battery negative (−) terminal.

(2) Check that no one is within a 10 m (33 ft) radius of the disc wheel which the steering wheel pad is tied to.

(3) Press the SST activation switch and deploy the airbag.

CAUTION:

When deploying the airbag, make sure that no one is near the tire.

HINT:

The airbag is deployed as the LED of the SST activation switch comes on.

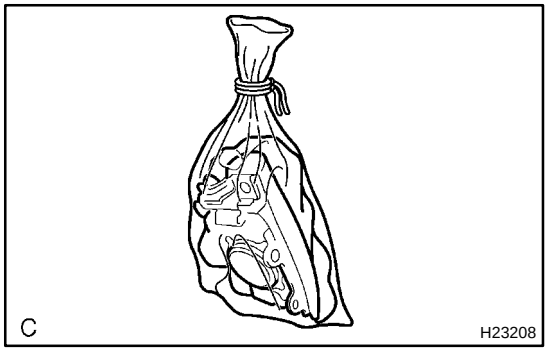

(g) Dispose of the steering wheel pad.

CAUTION:

- **The steering wheel pad becomes extremely hot when the airbag is deployed, so do not touch it for at least 30 minutes after deployment.**
- **Use gloves and safety glasses when handling a steering wheel pad with a deployed airbag.**
- **Do not apply water, etc. to a steering wheel pad with a deployed airbag.**
- **Always wash your hands with water after completing the operation.**

(1) Remove the steering wheel pad from the disc wheel.

(2) Place the steering wheel pad in a plastic bag, tie it tightly and dispose of it as other general part disposal.

RS121−01

INSPECTION

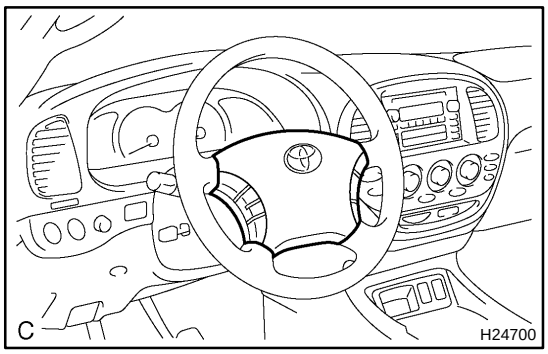

1. VEHICLES NOT INVOLVED IN A COLLISION

(a) Perform a diagnostic system check (see page DI−1851).

(b) With the steering wheel pad installed on the vehicle, perform a visual check. If there are any defects as mentioned below, replace the steering wheel pad with a new one:
Cuts, minute cracks or marked discoloration on the steering wheel pad top surface or in the grooved portion.

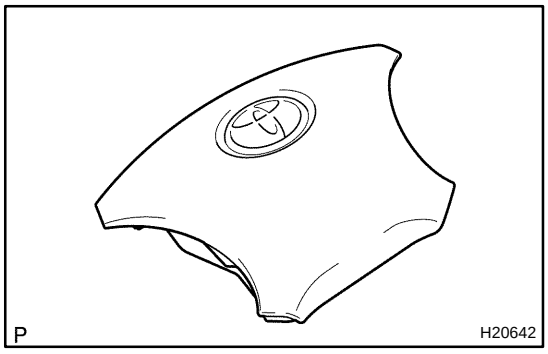

2. VEHICLE INVOLVED IN A COLLISION AND AIRBAG IS NOT DEPLOYED

(a) Perform a diagnostic system check (see page DI−1851).

(b) With the steering wheel pad removed from the vehicle, perform a visual check. If there are any defects as mentioned below, replace the steering wheel pad or steering wheel assembly with a new one:

- Cuts, minute cracks or marked discoloration on the steering wheel pad top surface or in the grooved portion.
- Cracks or other damage to the connectors.
- Deformation of the steering wheel assembly.

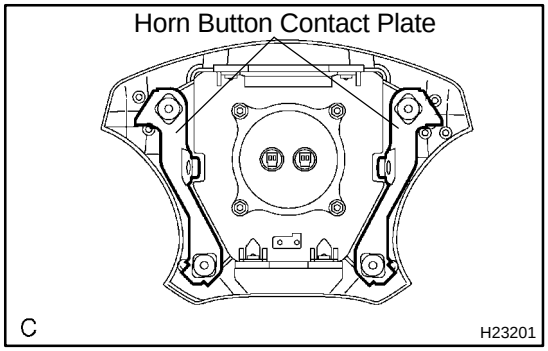

- Deformation of the horn button contact plate of the horn button assembly.

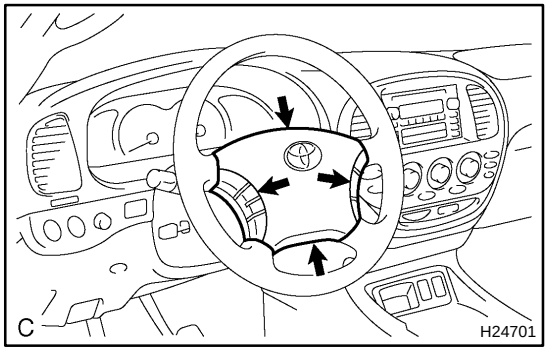

- There should be no interference between the steering wheel pad and steering wheel assembly, and the clearance should be uniform all the way around when the new steering wheel pad is installed on the steering wheel assembly.

CAUTION:
For removal and installation procedures of the steering wheel pad, see page RS−23 and RS−33. Be sure to follow the correct procedure.

RS013−33

INSTALLATION

CAUTION:

- **If the steering wheel pad has been dropped, or there are cracks, dents or other defects in the case or connector, replace the steering wheel pad with a new one.**
- **When installing the steering wheel pad, take care that it is not pinched between other parts.**
- **Never use airbag parts from another vehicle. When replacing parts, replace them with new ones.**

1. **INSTALL SPIRAL CABLE (SEE PAGE SR−28 AND SR−42)**
2. **INSTALL STEERING COLUMN COVER LOWER (SEE PAGE SR−28 AND SR−42)**
3. **INSTALL STEERING WHEEL (SEE PAGE SR−28 AND SR−42)**
4. **INSTALL STEERING WHEEL PAD (SEE PAGE SR−28 AND SR−42)**
5. **CONNECT CABLE TO NEGATIVE BATTERY TERMINAL**
6. **INSPECT SRS WARNING LIGHT (SEE PAGE DI−1839)**

RS00Z−32

REMOVAL

NOTICE:

- **If the wiring connector of the SRS is disconnected and the ignition switch is in the ON or ACC position, DTCs will be recorded.**
- **Never use airbag parts from another vehicle. When replacing parts, replace them with new ones.**

1. PRECAUTION (SEE PAGE RS−1 AND RS−3)

2. DISCONNECT CABLE FROM NEGATIVE BATTERY TERMINAL

Wait for 90 seconds after disconnecting the cable to prevent the airbag working.

3. REMOVE STEERING WHEEL PAD (SEE PAGE SR−18 AND SR−33)

4. REMOVE STEERING WHEEL (SEE PAGE SR−18 AND SR−33)

5. REMOVE STEERING COLUMN COVER LOWER (SEE PAGE SR−18 AND SR−33)

6. REMOVE SPIRAL CABLE (SEE PAGE SR−18 AND SR−33)

RS012−43

REPLACEMENT

REPLACEMENT REQUIREMENTS

In the following cases, replace the steering wheel pad, steering wheel or spiral cable with a new one.

Case	Replacing part
The airbag has been deployed.	Steering wheel pad
The steering wheel pad has been found to be faulty in troubleshooting.	Steering wheel pad
The spiral cable has been found to be faulty in troubleshooting.	Spiral cable
The steering wheel pad has been found to be faulty while checking items. (see page RS−24)	Steering wheel pad
The steering wheel has been found to be faulty while checking items. (see page RS−24)	Steering wheel
The spiral cable has been found to be faulty while checking items. (see page RS−24)	Spiral cable
The steering wheel pad has been dropped.	Steering wheel pad

CAUTION:

For removal and installation of the steering wheel pad, see page RS−23 and RS−33. Be sure to follow the correct procedure.

RS01W−21

INSPECTION

HINT:

The SRS wire harness is integrated with the cowl wire harness assembly. The SRS wire harness are encased in a yellow corrugated tube and all the connectors in the system except the seat position airbag sensor connector and occupant classification ECU connectors, are colored yellow.

1. VEHICLE NOT INVOLVED IN A COLLISION

Perform a diagnostic system check (see page DI−1851).

2. VEHICLE INVOLVED IN A COLLISION

(a) Perform a diagnostic system check (see page DI−1851).

(b) Check breaks in all wires of the SRS wire harness, and exposed conductors.

(c) Check if the SRS wire harness connectors are cracked or chipped.

WIRE HARNESS AND CONNECTOR

RS134−01

LOCATION

Standard Cab:
Access Cab:

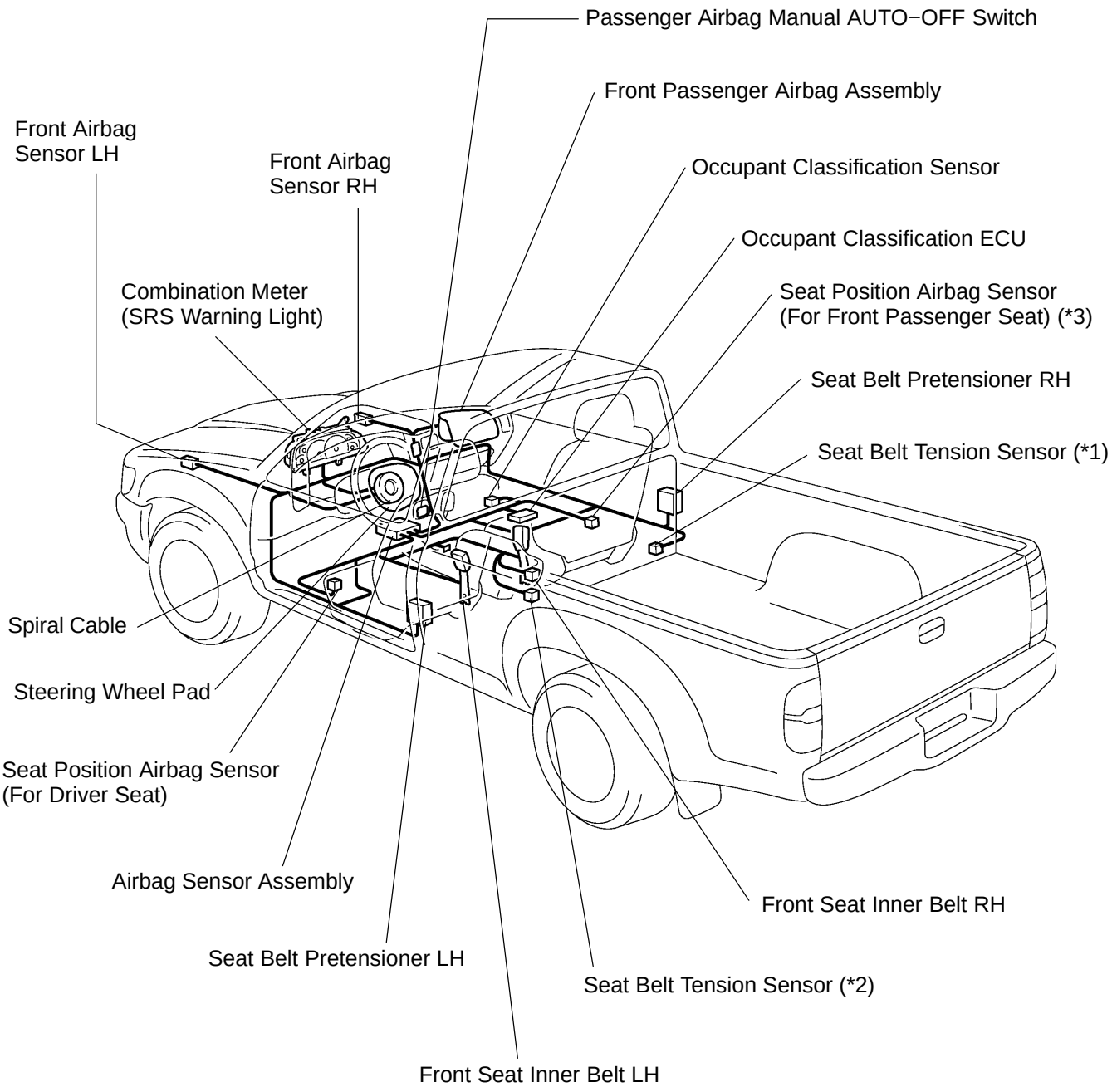

*1: Bench Type Seat
*2: Split Type Seat
*3: Except Separate Seat

N

cmc0244

Double Cab:

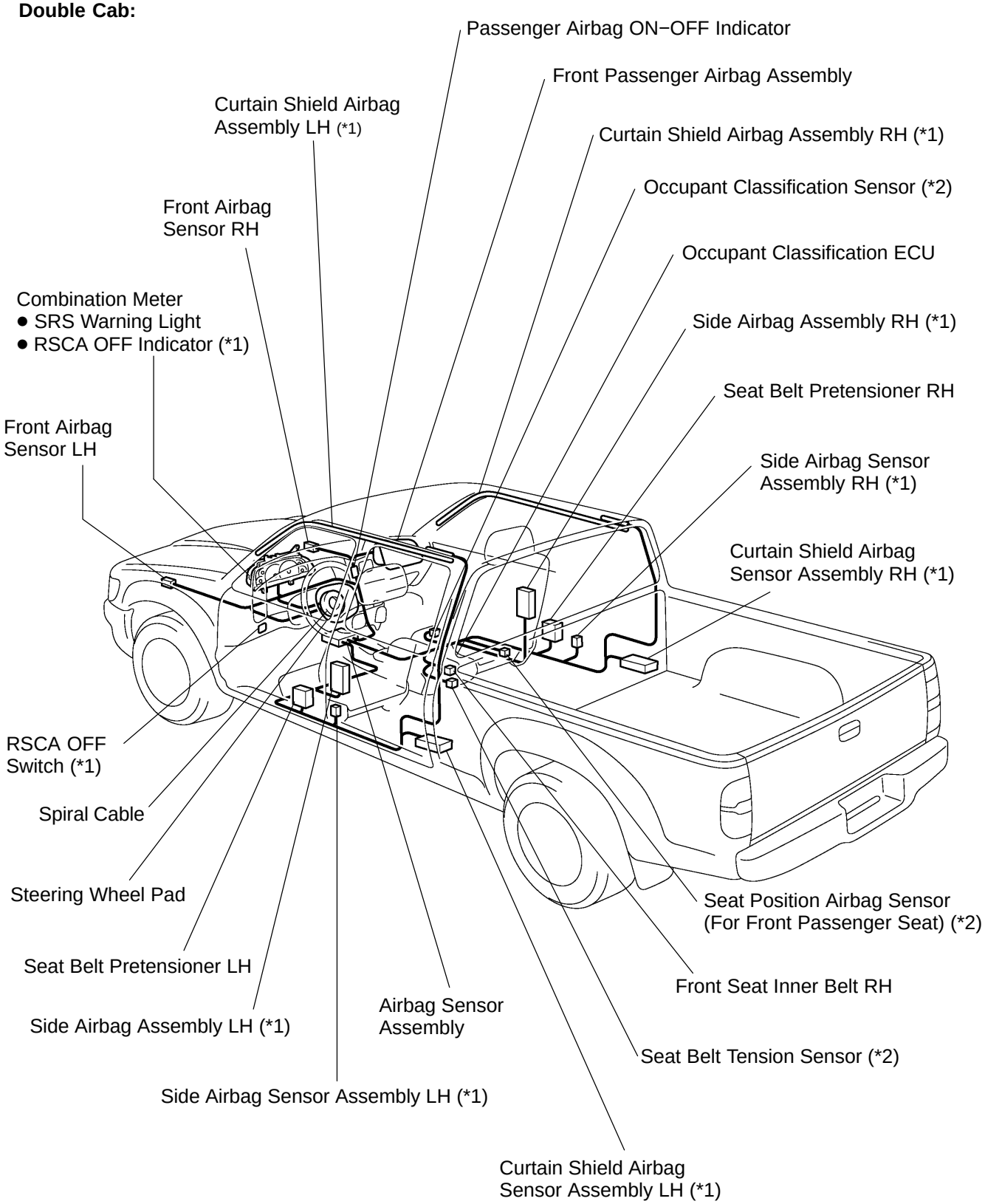

(*1) w/ Side Airbag and Curtain Shield Airbag
(*2) w/ Occupant Classification System

N

cmc0245

RS01X−19

REPLACEMENT

REPLACEMENT REQUIREMENTS

In the following cases, replace the wire harness or connector with a new one.

- Any of the SRS wire harness and connectors has been found to be faulty in troubleshooting.
- Any of the SRS wire harness and connectors has been found to be faulty while checking items (see page RS−141).

CAUTION:

If the wire harness used in the SRS is damaged, replace the whole SRS wire harness assembly.

SA2D4−01

INSPECTION

1. INSPECT A.D.D. ACTUATOR

(a) Disconnect the actuator connector.

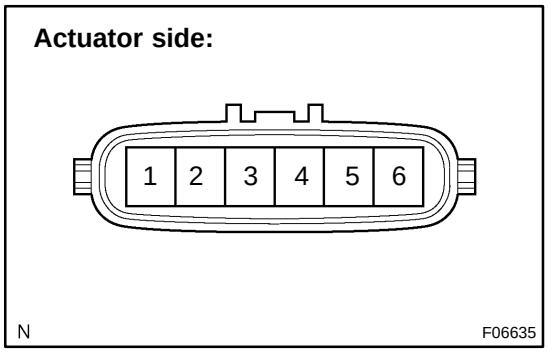

(b) Measure the resistance between terminals 2 and 6.
Standard resistance: 0.3 − 100 Ω

(c) Measure the resistance between terminal 2 or 6 and body ground.
Standard resistance: More than 0.5 MΩ

If the resistance value is not as specified, replace the actuator assembly.

2. INSPECT A.D.D. ACTUATOR OPERATION

Apply battery positive voltage between terminals 2 and 6, and check the actuator operation by sound, A.D.D. status and continuity between terminals 3 and 4.

Battery voltage applied terminal	3 − 4 terminals continuity	A.D.D. status
2 (+) − 6 (−)	Continuity	Connected
2 (−) − 6 (+)	No continuity	Disconnected

If the operation is not as specified, replace the actuator assembly.

3. INSPECT LIMIT SWITCH CONTINUITY

(a) Connect the actuator connector.

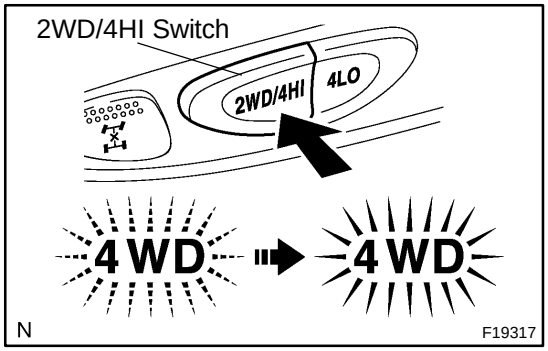

(b) Push the 2WD/4HI switch and check that the 4WD indicator light comes on after it is blinking.

(c) Check the A.D.D. actuator operation by sound.

(d) Disconnect the actuator connector.

(e) Check the continuity between each terminal, as shown in the chart.

Tester connected terminal number	Specified condition
1 − 3	No continuity
1 − 4	No continuity
3 − 5	Continuity
4 − 5	No continuity

(f) Connect the actuator connector.

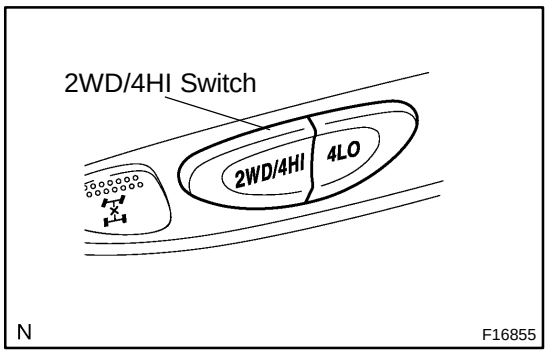

(g) Push the 2WD/4HI switch and check that the 4WD indicator light goes off after it is blinking.
(h) Check the A.D.D. actuator operation by sound.
(i) Disconnect the actuator connector.
(j) Check the continuity between each terminal, as shown in the chart.

Tester connected terminal number	Specified condition
1 − 3	Continuity
1 − 4	No continuity
3 − 5	No continuity
4 − 5	No continuity

(k) Connect the actuator connector.

4. INSPECT TRANSFER 4WD POSITION SWITCH (See page TR−14)

5. REMOVE A.D.D. ACTUATOR (See page SA−41)

6. INSPECT CLUTCH HUB AND CLUTCH SLEEVE

(a) Check the clutch hub and clutch sleeve for wear and damage.

If necessary, replace them.

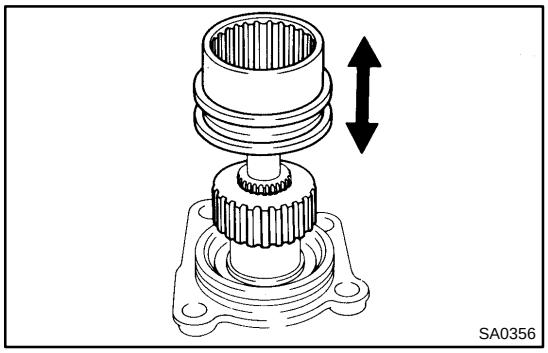

(b) Check that clutch sleeve slides smoothly on the clutch hub.

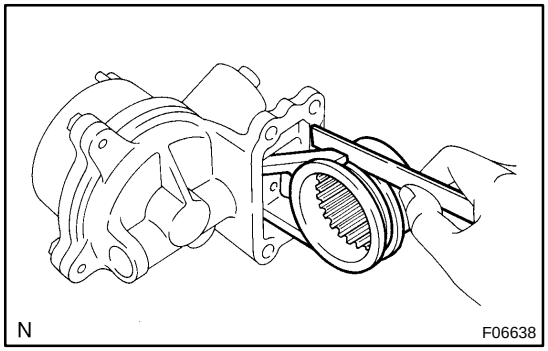

7. MEASURE SLEEVE FORK AND CLUTCH SLEEVE CLEARANCE

Using a feeler gauge, measure the clearance between the sleeve fork and clutch sleeve.

Maximum clearance: 0.35 mm (0.0138 in.)

If the clearance exceeds the maximum, replace the fork or sleeve.

A.D.D. CONTROL SYSTEM

LOCATION

SA0BF−07

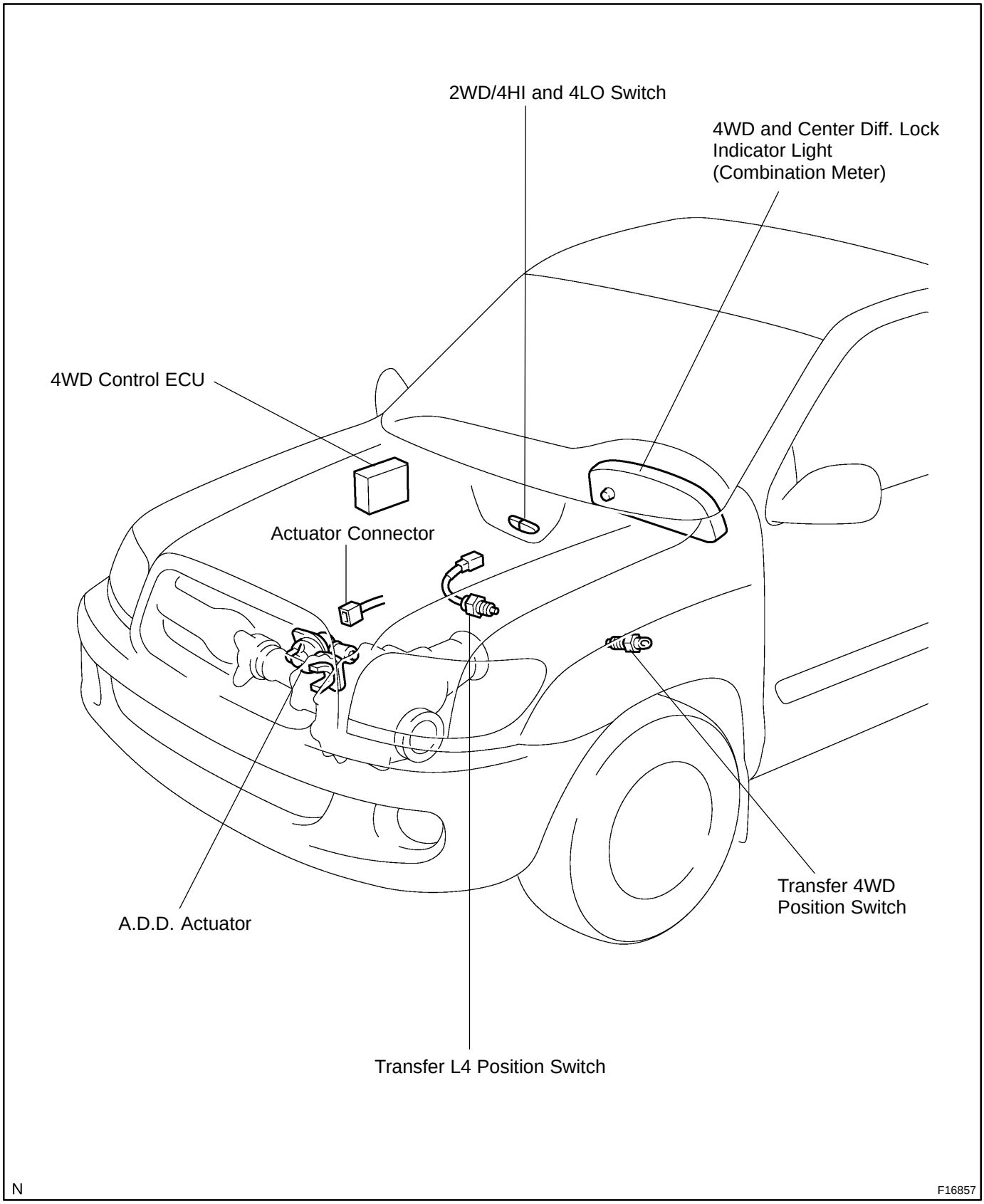

FRONT AXLE HUB

COMPONENTS

SA1JY−03

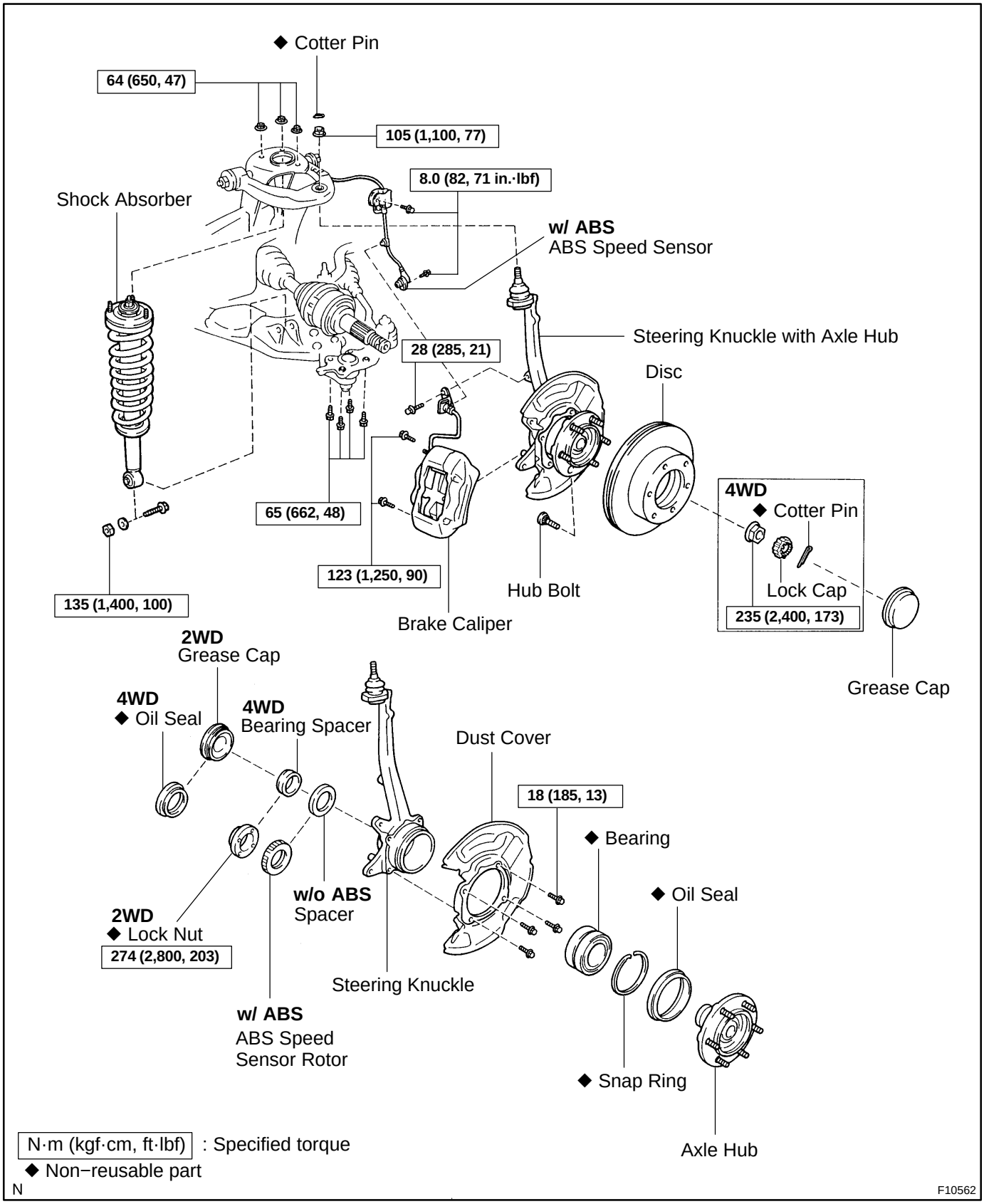

SA1K0−02

DISASSEMBLY

1. 2WD:

REMOVE GREASE CAP

(a) Mount the axle hub in a soft jaw vise.

HINT:

Close the vise until it holds the hub bolts. Do not tighten further.

(b) Using a screwdriver, remove the grease cap.

2. 4WD:

REMOVE OIL SEAL (INSIDE)

(a) Mount the axle hub in a soft jaw vise.

HINT:

Close the vise until it holds the hub bolts. Do not tighten further.

(b) Using a screwdriver, remove the oil seal (inside).

3. 2WD:

REMOVE LOCK NUT AND ABS SPEED SENSOR ROTOR/SPACER

(a) Using a chisel and hammer, loosen the staked part of the lock nut.

NOTICE:

Be careful not to damage the bushing.

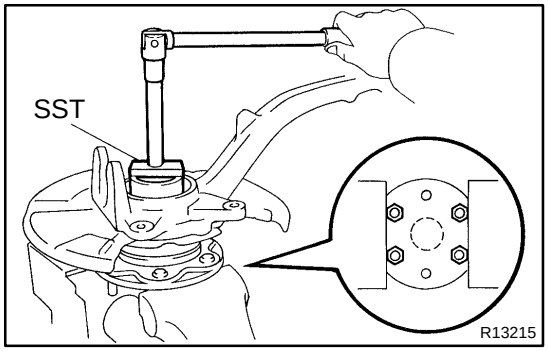

(b) Using SST, remove the lock nut.

SST 09318−12010

(c) Remove the ABS speed sensor rotor/spacer.

NOTICE:

Take care not to scratch the serration of the speed sensor rotor.

4. REMOVE AXLE HUB FROM STEERING KNUCKLE

(a) Remove the 4 bolts and shift the dust cover towards the hub side (outside).

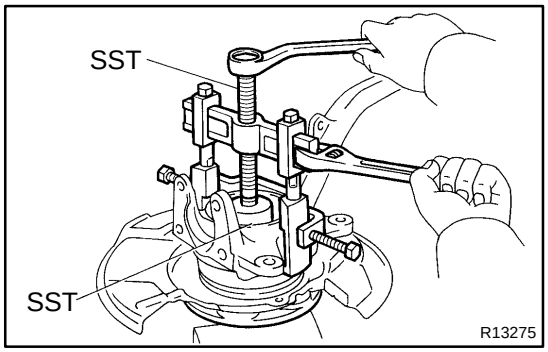

(b) Using SST, remove the axle hub from the steering knuckle.

SST 09710−30021 (09710−03051),
09950−40011 (09951−04020, 09952−04010, 09953−04020, 09954−04010, 09955−04031, 09957−04010, 09958−04011)

(c) Remove the dust cover from the steering knuckle.

(d) 4WD:

Remove the bearing spacer and ABS speed sensor rotor (w/ ABS)/spacer (w/o ABS).

NOTICE:
Take care not to scratch the serration of the speed sensor rotor.

5. REMOVE OIL SEAL (OUTSIDE)

Using a screwdriver, remove the oil seal (outside) from the steering knuckle.

6. REMOVE BEARING FROM STEERING KNUCKLE

(a) Using snap ring pliers, remove the snap ring.

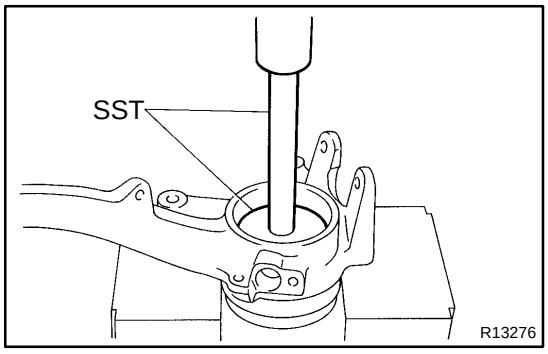

(b) Using SST and a press, remove the bearing from the steering knuckle.

SST 09950−60020 (09951−00810),
09950−70010 (09951−07150)

SA1G6−03

INSTALLATION

1. INSTALL STEERING KNUCKLE

(a) 4WD:

Insert the drive shaft into the axle hub and temporarily tighten the nut.

NOTICE:

Be careful not to damage the oil seal and drive shaft boot.

(b) Connect the steering knuckle to the upper suspension arm.

(c) Install the nut and a new cotter pin.

If the holes for the cotter pin are not aligned, tighten the nut further up to 60°.

Torque: 105 N·m (1,100 kgf·cm, 77 ft·lbf)

2. CONNECT LOWER BALL JOINT WITH LOWER BALL JOINT DUST COVER PROTECTOR

Connect the lower ball joint with lower ball joint dust cover protector to the steering knuckle with the 4 bolts.

Torque: 65 N·m (662 kgf·cm, 48 ft·lbf)

3. INSTALL SHOCK ABSORBER (See page SA−68)

4. INSTALL BRAKE CALIPER

(a) Install the disc, brake caliper and 2 bolts.

Torque: 123 N·m (1,250 kgf·cm, 90 ft·lbf)

(b) Install the brake line clamp to the steering knuckle with the bolt.

Torque: 28 N·m (285 kgf·cm, 21 ft·lbf)

5. w/ ABS:

CONNECT ABS SPEED SENSOR AND WIRE HARNESS CLAMP

Connect the ABS speed sensor and wire harness clamp to the steering knuckle with the 2 bolts.

Torque: 8.0 N·m (82 kgf·cm, 71 ft·lbf)

6. 4WD:

INSTALL DRIVE SHAFT LOCK NUT

(a) While applying the brakes, tighten the nut.

Torque: 235 N·m (2,400 kgf·cm, 173 ft·lbf)

(b) Install the lock cap and a new cotter pin.

If the holes for the cotter pin are not aligned, tighten the nut further up to 60°.

7. INSTALL GREASE CAP

8. INSTALL FRONT WHEEL

Torque: 110 N·m (1,150 kgf·cm, 83 ft·lbf)

9. DEPRESS BRAKE PEDAL SEVERAL TIMES

10. CHECK FRONT WHEEL ALIGNMENT (See page SA−5)

11. CHECK ABS SPEED SENSOR SIGNAL (See page DI−1387 or DI−1478)

SA1K1−02

REASSEMBLY

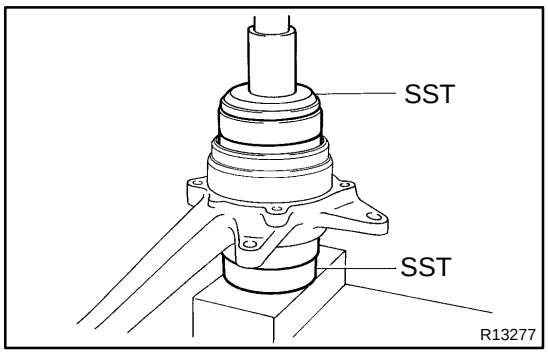

1. INSTALL NEW BEARING

(a) Using SST and a press, install a new bearing to the steering knuckle.
SST 09527−17011, 09950−60020 (09951−00910)

(b) Using snap ring pliers, install a new snap ring.

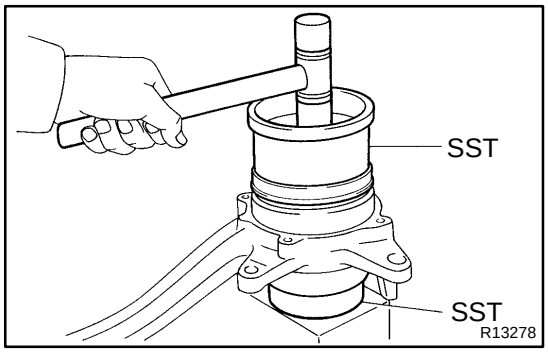

2. INSTALL NEW OIL SEAL (OUTSIDE)

(a) Using SST and a plastic hammer, install a new oil seal (outside).
SST 09223−15030, 09527−17011

(b) Coat MP grease to the oil seal lip.

3. INSTALL AXLE HUB TO STEERING KNUCKLE

(a) Install the dust cover to the steering knuckle with the 4 bolts.
Torque: 18 N·m (185 kgf·cm, 13 ft·lbf)

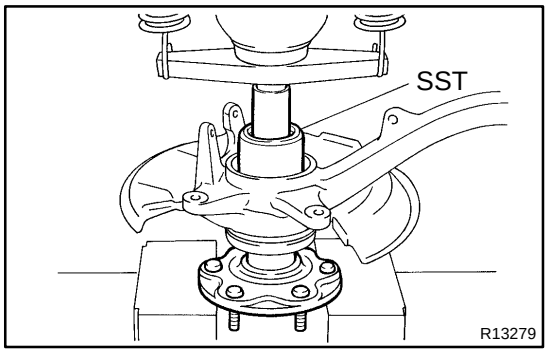

(b) Using SST and a press, install the axle hub to the steering knuckle.
SST 09649−17010

4. INSTALL ABS SPEED SENSOR ROTOR (w/ ABS)/ SPACER (w/o ABS)

NOTICE:
Do not scratch the serration of the speed sensor rotor.

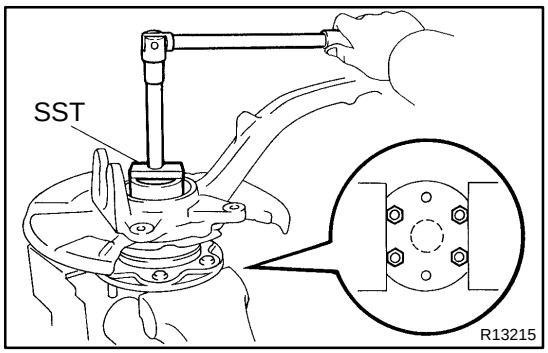

5. 2WD:
INSTALL NEW LOCK NUT

(a) Using SST, install and torque a new lock nut to the axle hub.
SST 09318−12010
Torque: 274 N·m (2,800 kgf·cm, 203 ft·lbf)

(b) Using a chisel and hammer, stake the lock nut.

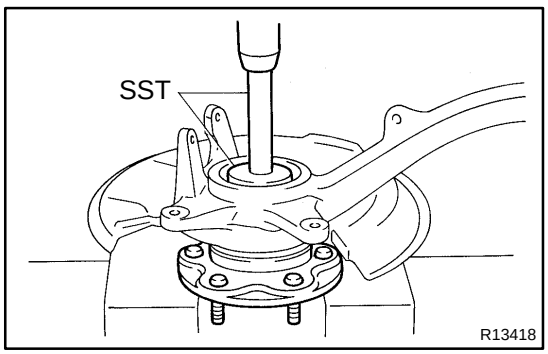

6. 4WD:
INSTALL BEARING SPACER

Using SST and a press, install the bearing spacer.
SST 09950−60010 (09951−00650),
09950−70010 (09951−07150)

7. 2WD:
INSTALL GREASE CAP

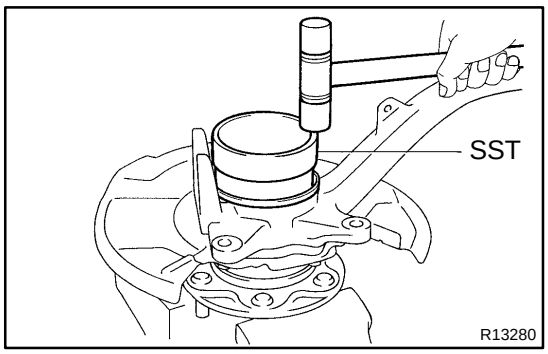

8. 4WD:
INSTALL NEW OIL SEAL (INSIDE)

(a) Using SST and a plastic hammer, install a new oil seal (inside).
SST 09527−17011

HINT:
Lightly strike the SST on its circumference evenly.

(b) Coat MP grease to the oil seal lip.

SA1JZ−02

REMOVAL

1. REMOVE FRONT WHEEL

2. REMOVE GREASE CAP

Using a screwdriver and hammer, remove the grease cap.

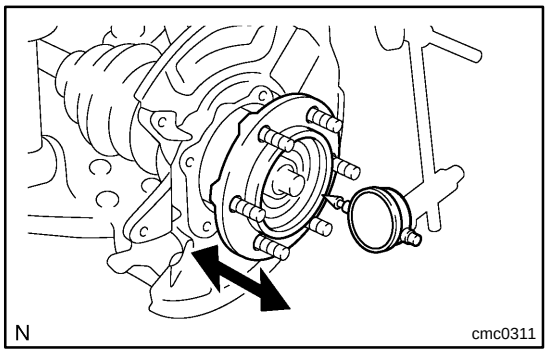

3. INSPECT FRONT AXLE HUB BEARING

(a) Remove the front disc brake caliper.

(b) Remove the front disc.

(c) Inspect the axle hub backlash.

(1) Using a dial indicator, check the backlash near the center of the axle hub.

Maximum: 0.05 mm (0.0020 in.)

If the backlash exceeds the maximum, replace the bearing.

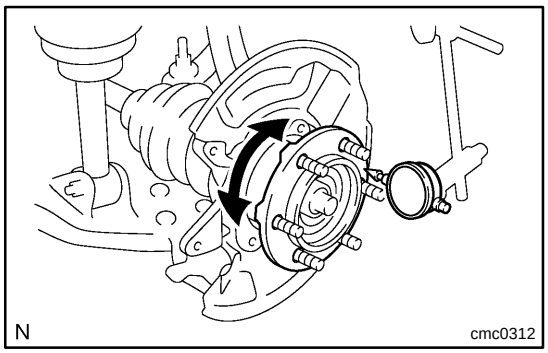

(d) Inspect the axle hub deviation.

(1) Using a dial indicator, check the deviation at the surface of the axle hub.

Maximum: 0.05 mm (0.0020 in.)

If the deviation exceeds the maximum, replace the bearing.

(e) Install the front disc.

(f) Install the front disc brake caliper.

(1) Install the brake caliper and 2 bolts.

Torque: 123 N·m (1,250 kgf·cm, 90 ft·lbf)

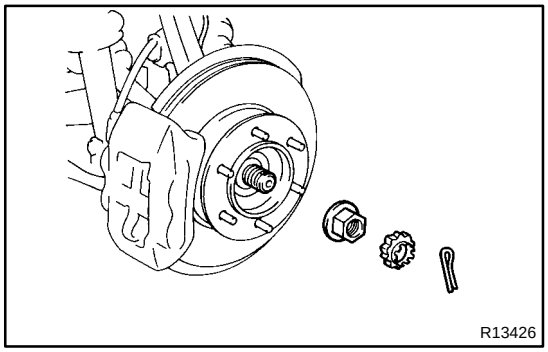

4. 4WD:

DISCONNECT DRIVE SHAFT

(a) Remove the cotter pin and lock cap.

(b) While applying the brakes, remove the lock nut.

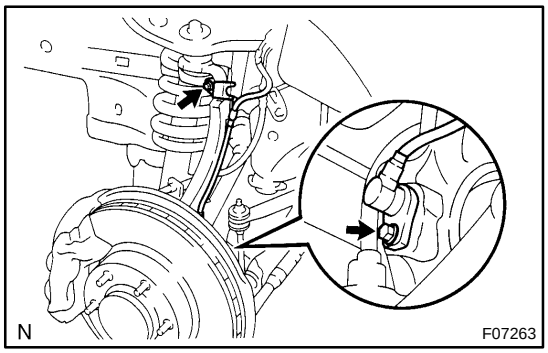

5. w/ ABS:

DISCONNECT ABS SPEED SENSOR AND WIRE HARNESS CLAMP FROM STEERING KNUCKLE

Remove the 2 bolts and disconnect the ABS speed sensor and wire harness clamp from the steering knuckle.

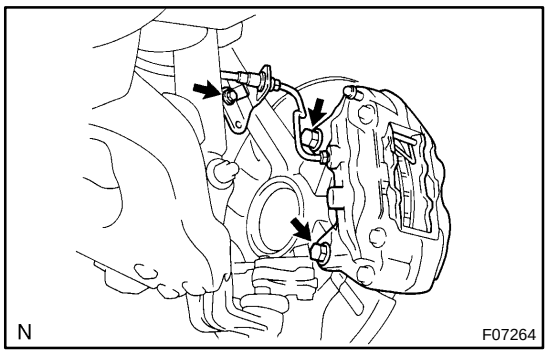

6. REMOVE BRAKE CALIPER AND DISC

(a) Remove the bolt and brake line clamp from the steering knuckle.

(b) Remove the 2 bolts, brake caliper and disc.

NOTICE:

Do not damage the brake tube.

(c) Support the brake caliper securely.

7. REMOVE SHOCK ABSORBER (See page SA−63)

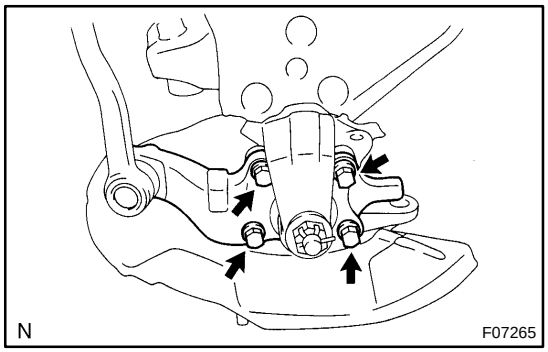

8. DISCONNECT LOWER BALL JOINT WITH LOWER BALL JOINT DUST COVER PROTECTOR

Remove the 4 bolts and disconnect the lower ball joint with lower ball joint dust cover protector.

9. REMOVE STEERING KNUCKLE

(a) Remove the cotter pin and loosen the nut.

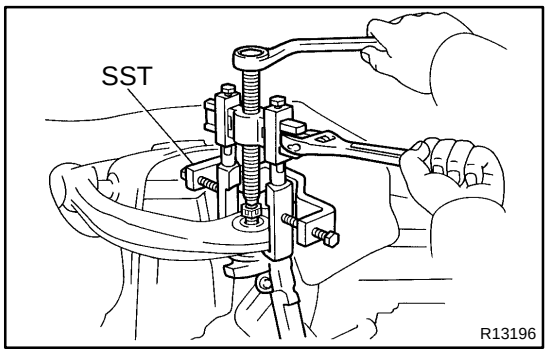

(b) Using SST, disconnect the steering knuckle.

SST 09950−40011 (09951−04010, 09952−04010, 09553−04020, 09554−04010, 09955−04031, 09958−04011)

(c) Remove the nut and steering knuckle.

NOTICE:

4WD:

Be careful not to damage the oil seal and drive shaft boot.

HINT:

4WD:

When it is difficult to disconnect the drive shaft, tap the tip of the drive shaft with a plastic hammer.

FRONT DIFFERENTIAL CARRIER

SA09N−06

COMPONENTS

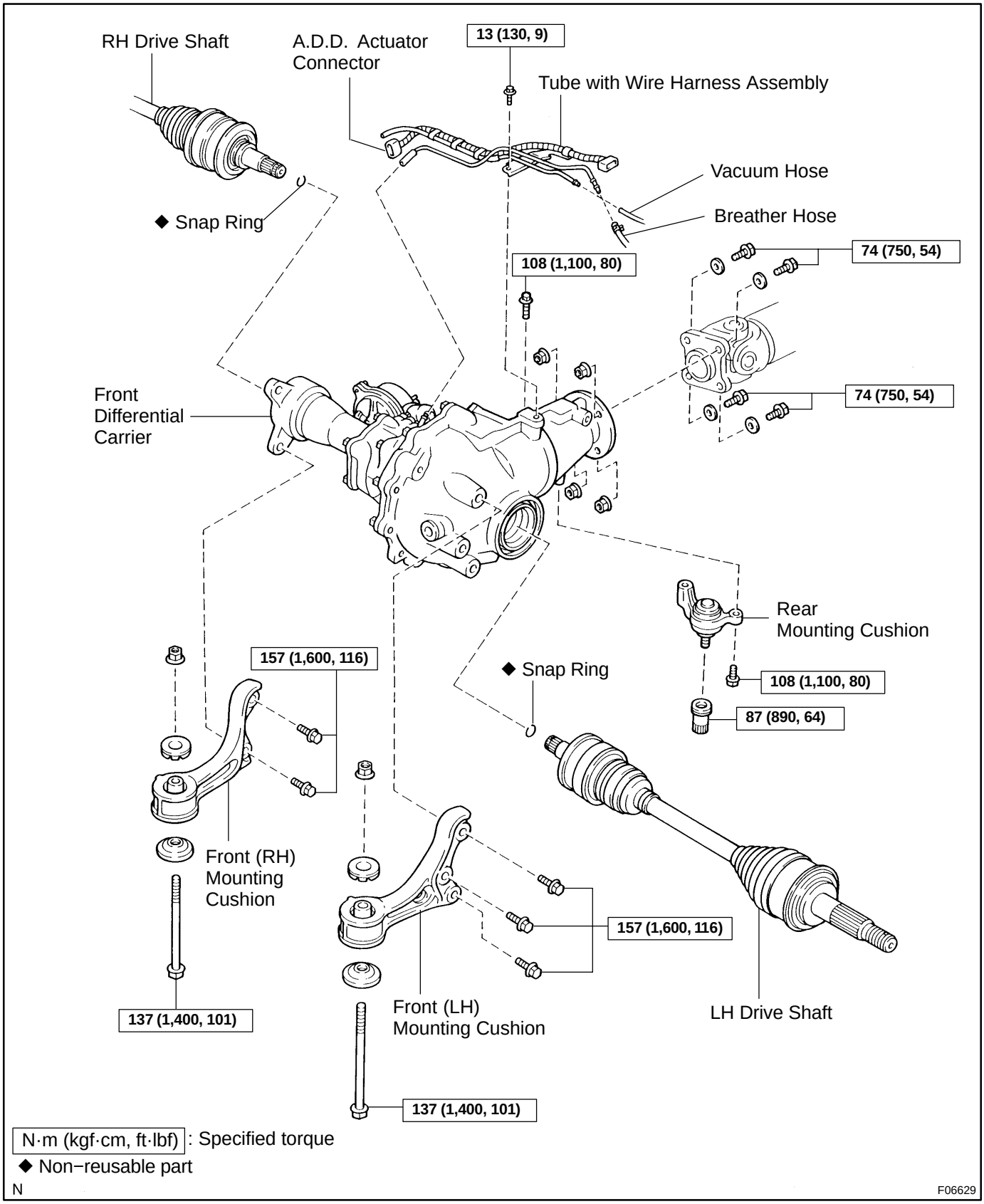

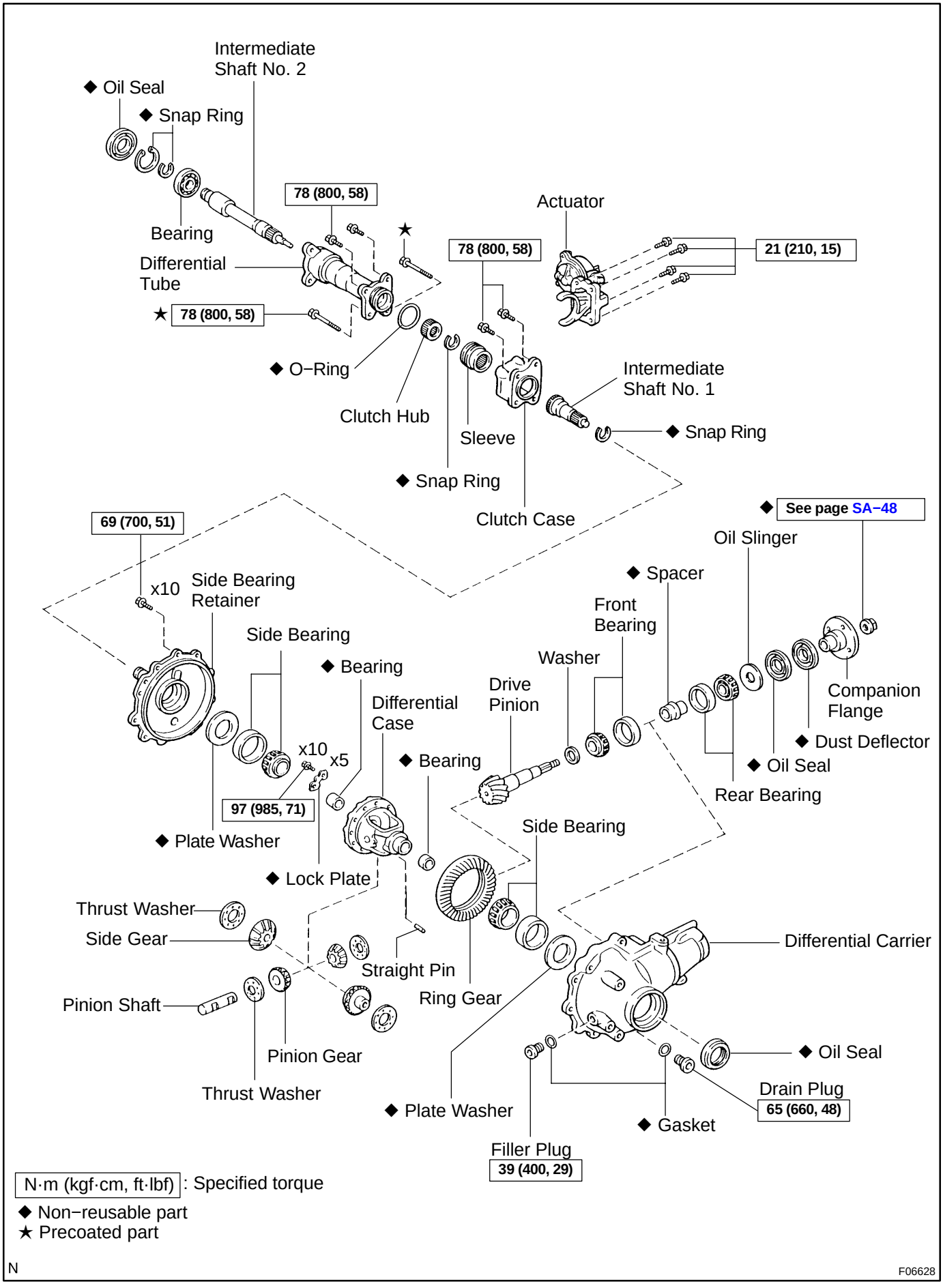

N·m (kgf·cm, ft·lbf) : Specified torque
◆ Non−reusable part
★ Precoated part

N

F06628

SA09P−09

DISASSEMBLY

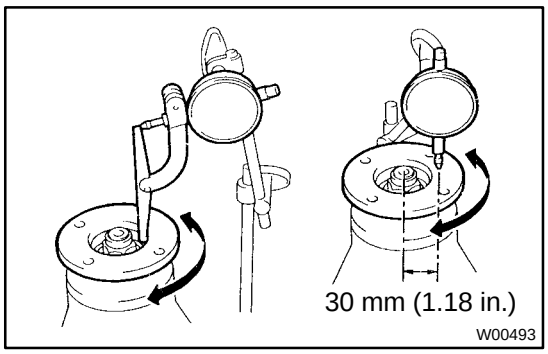

1. CHECK COMPANION FLANGE RUNOUT

Using a dial indicator, measure the vertical and lateral runout of the companion flange.

Maximum runout: 0.10 mm (0.0039 in.)

If the runout exceeds the maximum, replace the companion flange.

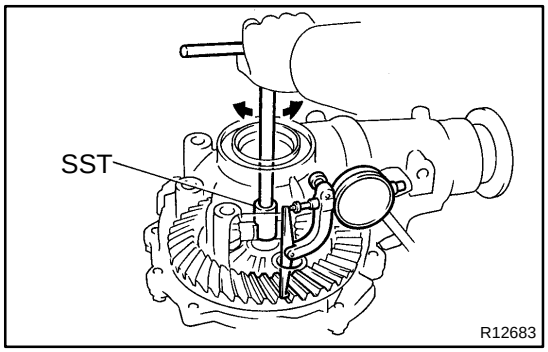

2. CHECK RING GEAR BACKLASH

Using SST and a dial indicator, measure the ring gear backlash.

SST 09564−32011

Backlash: 0.13 − 0.18 mm (0.0051 − 0.0071 in.)

HINT:

Measure at 3 or more points on the circumference of the ring gear.

If the backlash is not within the specified value, adjust the side bearing preload or repair as necessary.

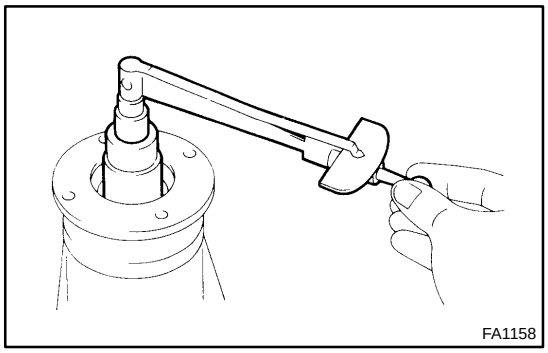

3. MEASURE DRIVE PINION PRELOAD

Using a torque wrench, measure the preload using the backlash between the drive pinion and ring gear.

Preload (at starting):
0.6 − 1.0 N·m (6 − 10 kgf·cm, 5.2 − 8.7 in.·lbf)

4. CHECK TOTAL PRELOAD

Using a torque wrench, measure the total preload with the teeth of the drive pinion and ring gear in contact.

Total preload (at starting):
Drive pinion preload plus 0.4 − 0.6 N·m (4 − 6 kgf·cm, 3.5 − 5.2 in.·lbf)

If necessary, disassemble and inspect the differential.

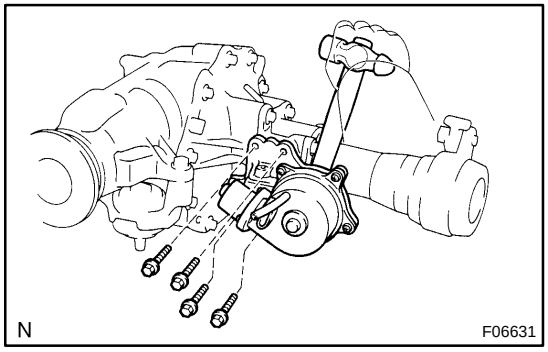

5. REMOVE A.D.D. ACTUATOR

(a) Remove the 4 bolts.

(b) Using a hammer handle, remove the actuator.

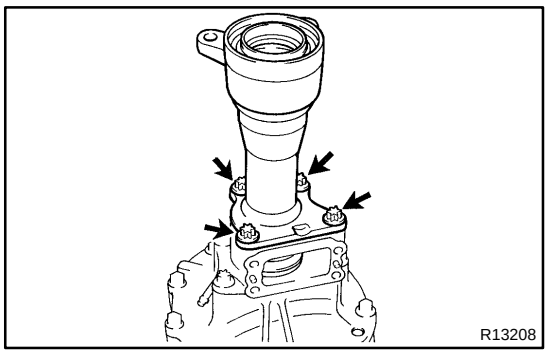

6. REMOVE DIFFERENTIAL TUBE

(a) Using a torx® socket (E14), remove the 4 torx® bolts.

(b) Using a plastic hammer, tap on the differential tube to remove it.

(c) Remove the sleeve.

(d) Remove the O−ring from the differential tube.

7. REMOVE CLUTCH CASE

(a) Using a torx® socket (E14), remove the 2 torx® bolts.

(b) Using a plastic hammer, tap on the clutch case to remove it.

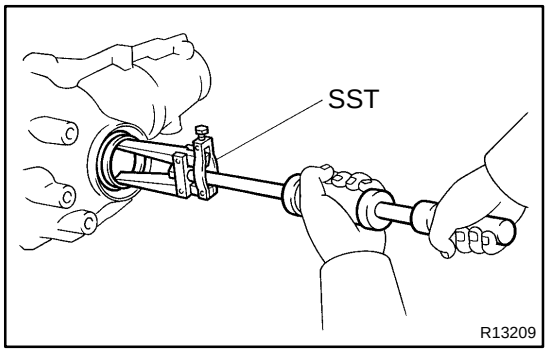

8. REMOVE SIDE OIL SEAL

Using SST, remove the side oil seal.

SST 09308−00010

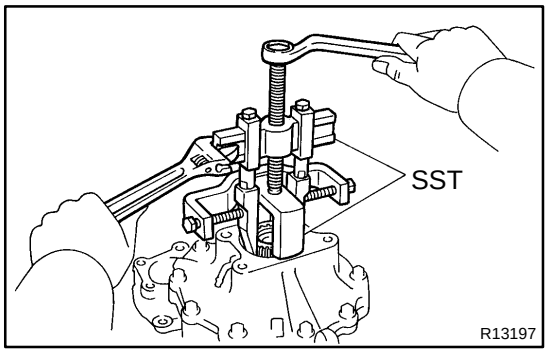

9. REMOVE INTERMEDIATE SHAFT NO. 1

(a) Using SST, remove the intermediate shaft No. 1.

SST 09350−20015 (09369−20040), 09950−40011 (09951−04010, 09952−04010, 09953−04020, 09954−04010, 09955−04011, 09957−04010, 09958−04011)

(b) Remove the snap ring.

10. REMOVE COMPANION FLANGE

(a) Using a chisel and hammer, unstake the nut.

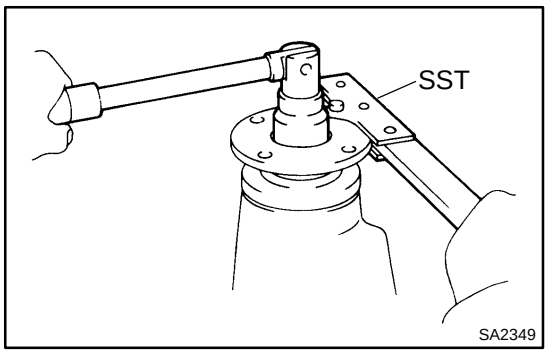

(b) Using SST to hold the flange, remove the nut.

SST 09330−00021

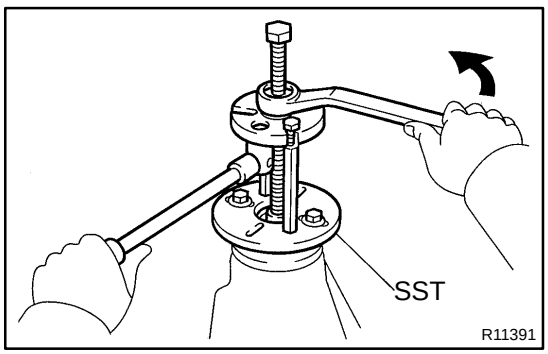

(c) Using SST, remove the companion flange.

SST 09950−30012 (09951−03010, 09953−03010, 09954−03010, 09955−03030, 09956−03020)

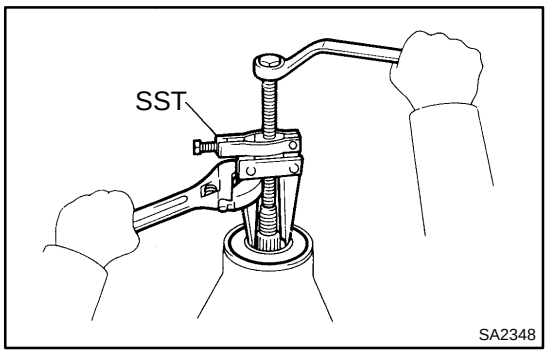

11. REMOVE OIL SEAL AND OIL SLINGER

(a) Using SST, remove the oil seal.
SST 09308−10010

(b) Remove the oil slinger.

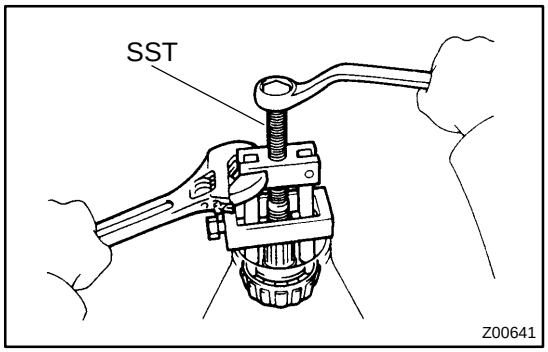

12. REMOVE REAR BEARING AND BEARING SPACER

(a) Using SST, remove the rear bearing from the drive pinion.
SST 09556−22010

(b) Remove the bearing spacer.

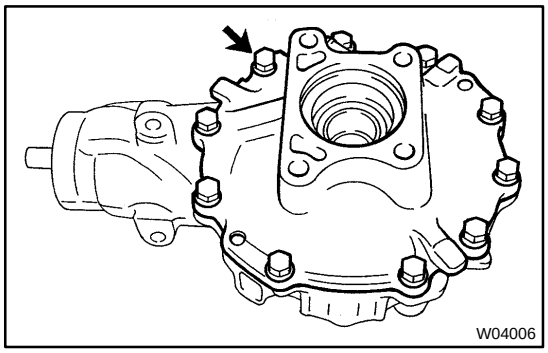

13. REMOVE SIDE BEARING RETAINER

Remove the 10 bolts and tap out the retainer with a plastic hammer.

14. REMOVE DIFFERENTIAL CASE ASSEMBLY

15. REMOVE DRIVE PINION FROM DIFFERENTIAL CARRIER

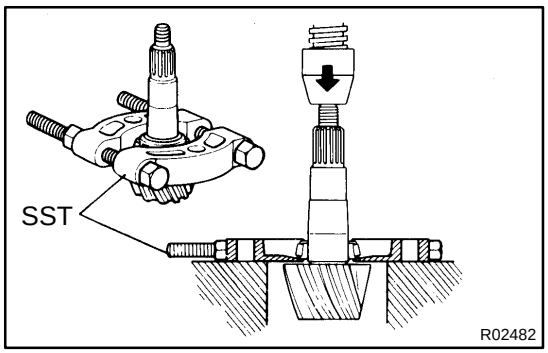

16. REMOVE DRIVE PINION FRONT BEARING

Using SST and a press, remove the bearing and washer from the drive pinion.
SST 09950−00020

HINT:
If the drive pinion or ring gear is damaged, replace them as a set.

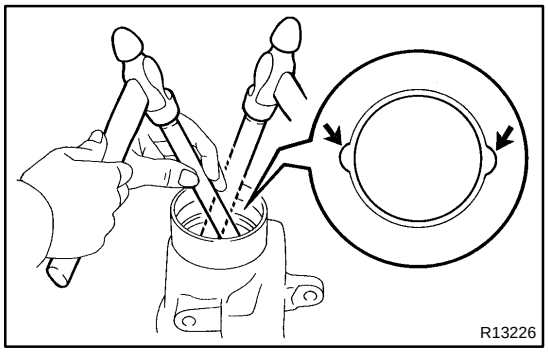

17. REMOVE DRIVE PINION BEARING OUTER RACES

(a) Using a brass bar and hammer, remove the front bearing outer race.

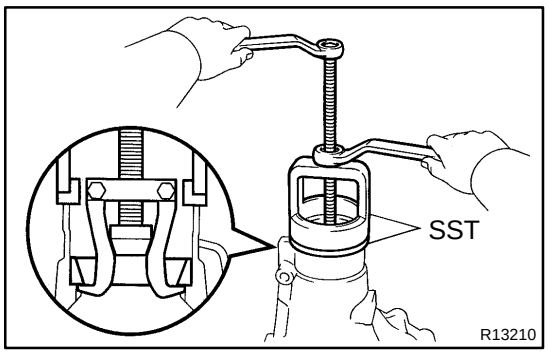

(b) Using SST, remove the rear bearing outer race.
SST 09502−12010, 09612−65014 (09612−01020, 09612−01050)

18. REMOVE SIDE BEARING OUTER RACES

HINT:

- Measure the plate washer thickness and note it down.
- Tag the bearing outer races to show the location for reassembling.

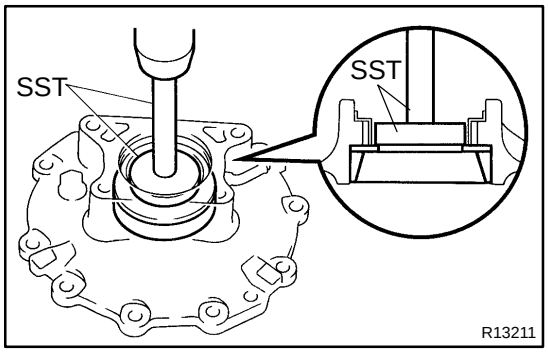

(a) Using SST and a press, remove the plate washer and outer race from the bearing retainer.
SST 09950−60010 (09951−00540), 09950−70010 (09951−07150)

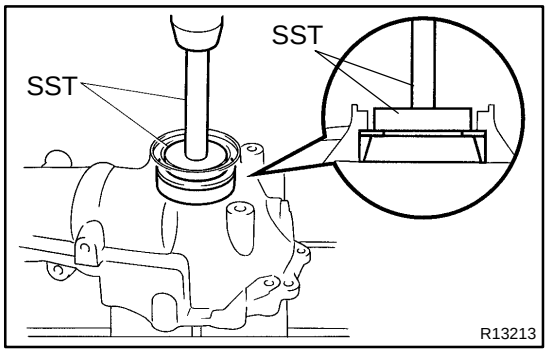

(b) Using SST and a press, remove the plate washer and outer race from the differential carrier.
SST 09950−60010 (09951−00650), 09950−70010 (09951−07150)

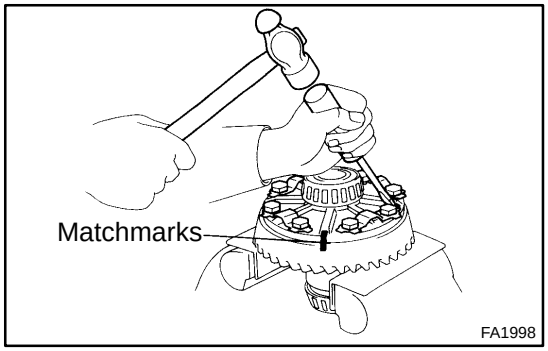

19. REMOVE RING GEAR

(a) Place matchmarks on the ring gear and differential case.
(b) Using a screwdriver and hammer, unstake the 5 lock plates.
(c) Remove the 10 bolts and 5 lock plates.
(d) Using a plastic hammer, tap on the ring gear to separate it from the differential case.

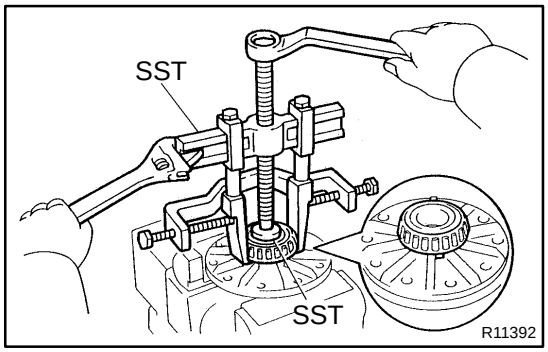

20. REMOVE SIDE BEARINGS

Using SST, remove the 2 side bearings from the differential case.
SST 09950−40011 (09951−04010, 09952−04010, 09953−04020, 09954−04010, 09955−04061, 09957−04010, 09958−04011), 09950−60010 (09951−00480)

HINT:

Fix the claws of SST to the notch in the differential case.

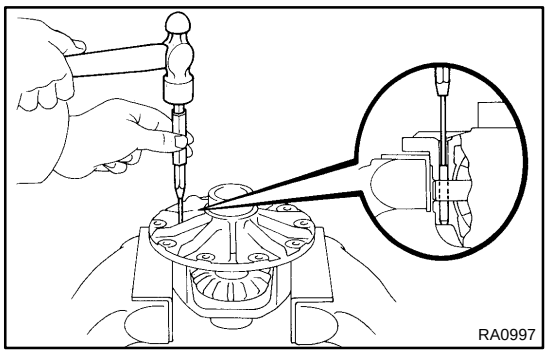

21. DISASSEMBLE DIFFERENTIAL CASE ASSEMBLY

(a) Using a pin punch and hammer, remove the straight pin.

(b) Remove the pinion shaft, 2 pinion gears, pinion gear thrust washers, side gears and side gear thrust washers from the differential case.

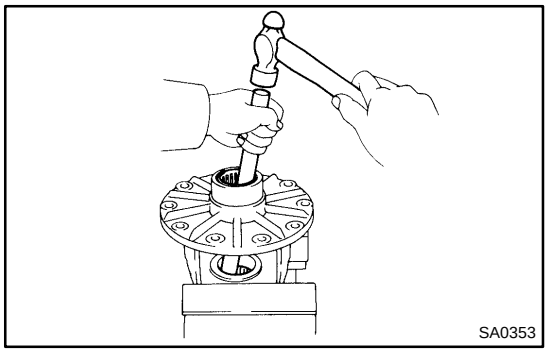

22. REMOVE BEARINGS

Using a brass bar and hammer, remove the 2 bearings.

SA09S−05

INSTALLATION

1. INSTALL DIFFERENTIAL MOUNTING CUSHIONS

(a) Install the 2 front mounting cushions with the 5 bolts.
Torque: 157 N·m (1,600 kgf·cm, 116 ft·lbf)

(b) Install the rear mounting cushion with the 2 bolts.
Torque: 108 N·m (1,100 kgf·cm, 80 ft·lbf)

2. INSTALL FRONT DIFFERENTIAL CARRIER

(a) Jack up the front differential.

(b) Install the 2 front mounting bolts.
Torque: 137 N·m (1,400 kgf·cm, 101 ft·lbf)

(c) Using a hexagon (12 mm) wrench, install the rear mounting nut.
Torque: 87 N·m (890 kgf·cm, 64 ft·lbf)

(d) Remove the jack.

3. INSTALL TUBE WITH WIRE HARNESS ASSEMBLY

(a) Install the tube with wire harness assembly with the bolt.
Torque: 13 N·m (130 kgf·cm, 9 ft·lbf)

(b) Connect the actuator connector, vacuum hose and breather hose.

4. CONNECT FRONT PROPELLER SHAFT (See page PR−15)

5. INSTALL DRIVE SHAFTS (See page SA−34)

6. FILL DIFFERENTIAL WITH HYPOID GEAR OIL (See page SA−36)

SA09R−09

REASSEMBLY

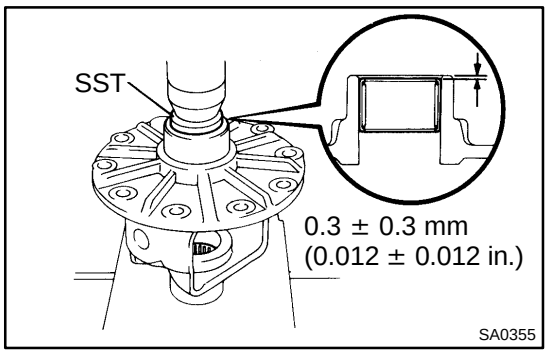

1. INSTALL NEW BEARINGS

Using SST and a press, install 2 new bearings.

SST 09950−60010 (09951−00380)

Bearing press in depth:
0.3 ± 0.3 mm (0.012 ± 0.012 in.)

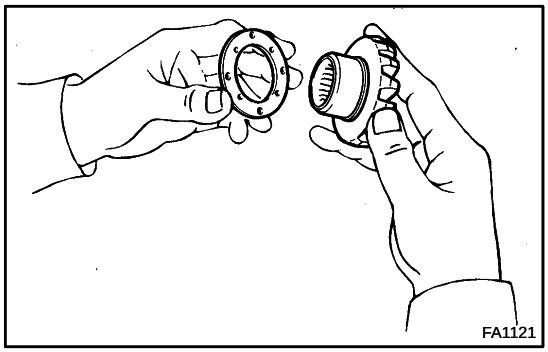

2. ASSEMBLE DIFFERENTIAL CASE

(a) Install the 2 thrust washers on the side gears.

(b) Install the 2 side gears, pinion gears, pinion gear thrust washers and pinion shaft in the differential case.

HINT:
Align the holes for the straight pin in the differential case and pinion shaft.

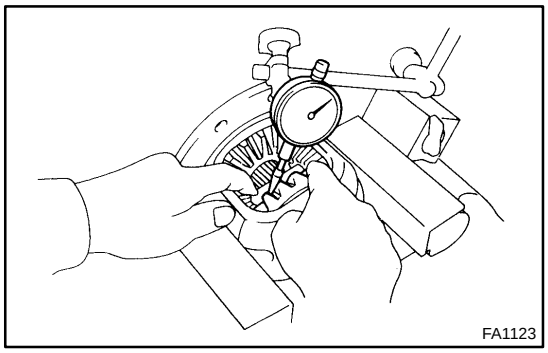

(c) Using a dial indicator, measure the side gear backlash while holding one pinion gear toward the differential case.

Backlash: 0 − 0.20 mm (0 − 0.0079 in.)

If the backlash is not within the specified value, replace the side gear thrust washer with an appropriate thickness.

HINT:
Refer to the following table to select thrust washers which will ensure that the backlash is within the specified value.

Washer thickness:

Thickness mm (in.)	Thickness mm (in.)
0.96 − 1.04 (0.0378 − 0.0409)	1.16 − 1.24 (0.0457 − 0.0488)
1.06 − 1.14 (0.0417 − 0.0449)	1.26 − 1.34 (0.0496 − 0.0528)

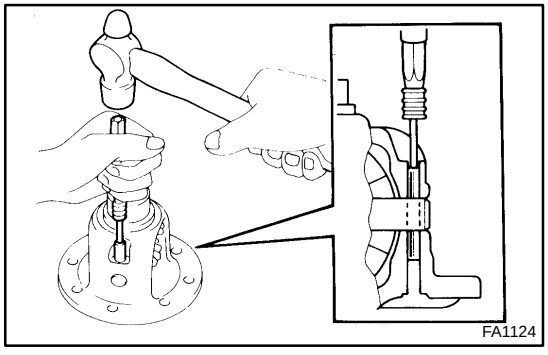

3. INSTALL STRAIGHT PIN AND STAKE DIFFERENTIAL CASE

(a) Using a pin punch and hammer, install the straight pin through the differential case and hole in the pinion shaft.

(b) Stake the differential case.

4. INSTALL RING GEAR ON DIFFERENTIAL CASE

(a) Clean the contact surfaces of the differential case and ring gear.

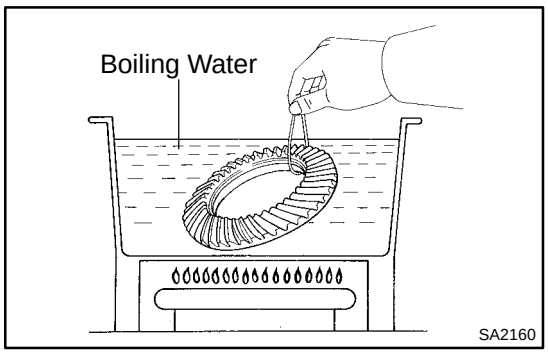

(b) Heat the ring gear to about 100°C (212°F) in boiling water.
(c) Carefully take the ring gear out of the boiling water.
(d) After the moisture on the ring gear has completely evaporated, quickly install the ring gear to the differential case.

HINT:
Align the matchmarks on the ring gear and differential case.

(e) Temporarily install 5 new lock plates and 10 bolts so that the bolt holes in the ring gear and differential case are aligned.
(f) After the ring gear has cooled sufficiently, torque the ring gear set bolts.
Torque: 97 N·m (985 kgf·cm, 71 ft·lbf)

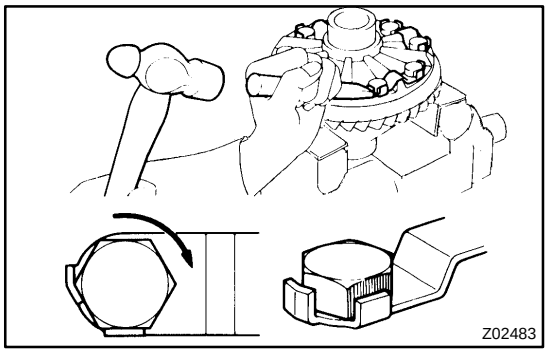

(g) Using a chisel and hammer, stake the 5 lock plates.

HINT:
Stake the claws of the lock plates to fix the bolts. For the claw contacting the protruding portion of the bolt, stake only the half of it along the tightening direction.

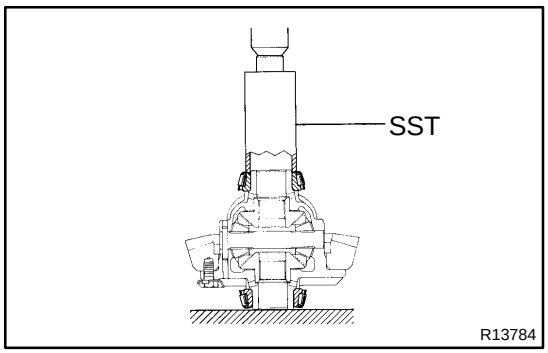

5. INSTALL SIDE BEARINGS

Using SST and a press, install the bearings into the differential case.

SST 09226−10010

6. INSTALL SIDE BEARING OUTER RACES

If replacing the side bearings, fit the thinnest new plate washers to each bearing outer race.
If reusing the bearings, fit the new washers with the same thickness as removed.

(a) Install a new plate washer to the side bearing retainer.
(b) Using SST and a press, install the bearing outer race.
SST 09950−60020 (09951−00790),
09950−70010 (09951−07150)
(c) Install a new plate washer to the differential carrier.

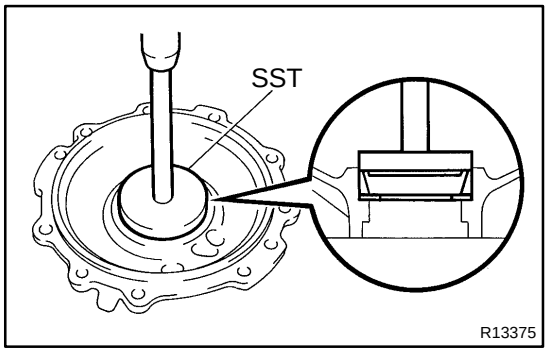

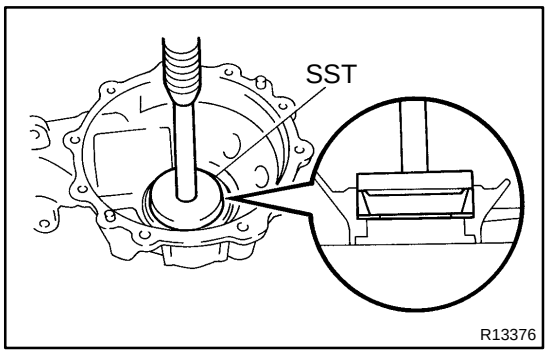

(d) Using SST and a press, install the bearing outer race.
SST 09950−60020 (09951−00790),
09950−70010 (09951−07150)

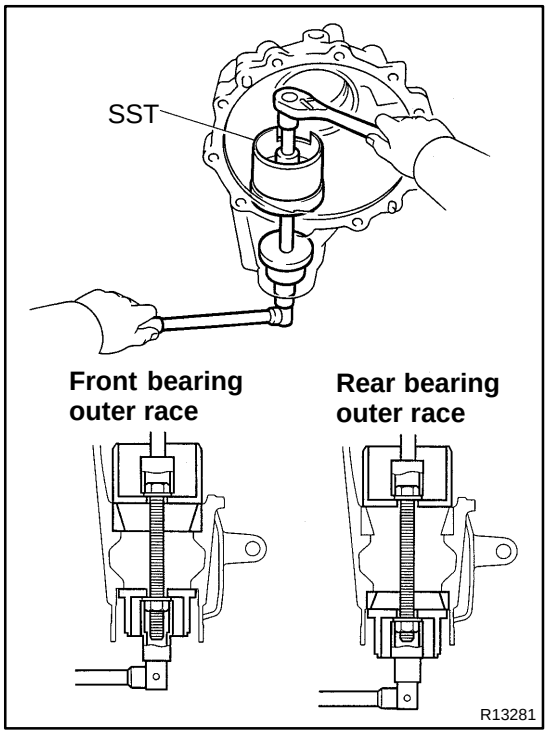

7. INSTALL DRIVE PINION FRONT AND REAR BEARING OUTER RACES

Using SST, install the 2 outer races.
SST 09570−22011

8. INSTALL DRIVE PINION FRONT BEARING

(a) Install the washer on the drive pinion.

HINT:
First fit a washer with the same thickness as the washer which was removed, then after checking the tooth contact pattern, replace the washer with one of a different thickness if necessary.

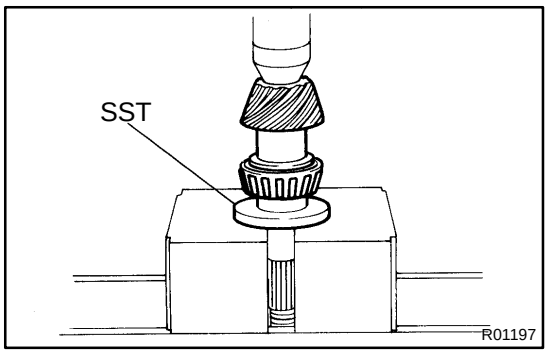

(b) Using SST and a press, install the front bearing onto the drive pinion.
SST 09506−30012

9. TEMPORARILY ADJUST DRIVE PINION PRELOAD

(a) Install the drive pinion, rear bearing and oil slinger.

HINT:
After adjusting the ring gear tooth contact pattern, assemble the spacer and oil seal.

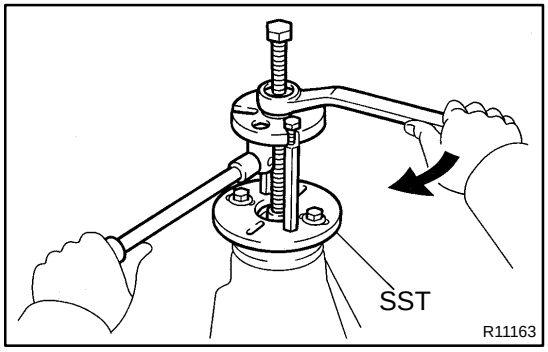

(b) Using SST, install the companion flange.
SST 09950−30012 (09951−03010, 09953−03010, 09954−03010, 09955−03030, 09956−03020)

(c) Coat the threads of the nut with hypoid gear oil.

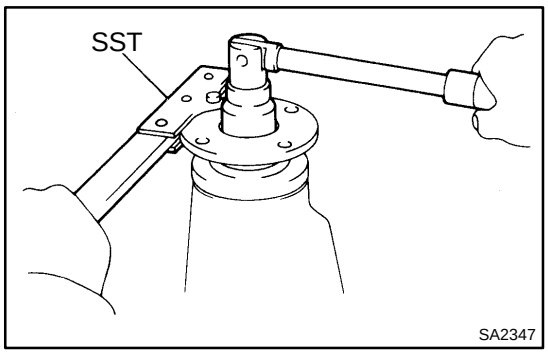

(d) Using SST to hold the flange, tighten the nut.

HINT:

Adjust the drive pinion preload by tightening the companion flange nut.

SST 09330−00021

NOTICE:

As there is no spacer, tighten the nut a little at a time and be careful not to overtighten it.

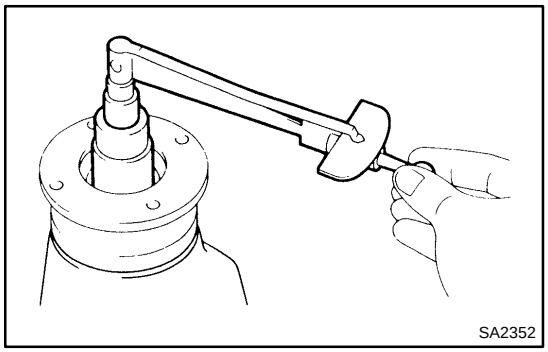

(e) Using a torque wrench, measure the preload of the drive pinion using the backlash between the drive pinion and ring gear.

Preload (at starting):

New bearing

1.2 − 1.9 N·m (12 − 19 kgf·cm, 10.4 − 16.5 in.·lbf)

Reused bearing

0.6 − 1.0 N·m (6 − 10 kgf·cm, 5.2 − 8.7 in.·lbf)

10. INSTALL DIFFERENTIAL CASE IN DIFFERENTIAL CARRIER

11. ADJUST RING GEAR BACKLASH

(a) Install the side bearing retainer with the 10 bolts.

Torque: 69 N·m (700 kgf·cm, 51 ft·lbf)

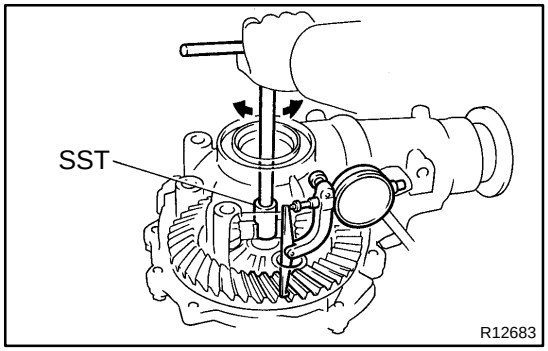

(b) Using SST and a dial indicator, measure the ring gear backlash.

SST 09564−32011

Backlash: 0.13 − 0.18 mm (0.0051 − 0.0071 in.)

If the backlash is not within the specified value, adjust it by either increasing or decreasing the thickness of plate washers on both sides by an equal amount.

HINT:

There should be no clearance between the plate washer and case. Ensure that there is ring gear backlash.

Washer thickness:

Thickness mm (in.)	Thickness mm (in.)	Thickness mm (in.)
2.00 − 2.02 (0.0787 − 0.0795)	2.27 − 2.29 (0.0894 − 0.0902)	2.54 − 2.56 (0.1000 − 0.1008)
2.03 − 2.05 (0.0799 − 0.0807)	2.30 − 2.32 (0.0906 − 0.0913)	2.57 − 2.59 (0.1012 − 0.1020)
2.06 − 2.08 (0.0811 − 0.0819)	2.33 − 2.35 (0.0917 − 0.0925)	2.60 − 2.62 (0.1024 − 0.1031)
2.09 − 2.11 (0.0823 − 0.0831)	2.36 − 2.38 (0.0929 − 0.0937)	2.63 − 2.65 (0.1035 − 0.1043)
2.12 − 2.14 (0.0835 − 0.0843)	2.39 − 2.41 (0.0941 − 0.0949)	2.66 − 2.68 (0.1047 − 0.1055)
2.15 − 2.17 (0.0846 − 0.0854)	2.42 − 2.44 (0.0953 − 0.0961)	2.69 − 2.71 (0.1059 − 0.1067)
2.18 − 2.20 (0.0858 − 0.0866)	2.45 − 2.47 (0.0965 − 0.0972)	2.72 − 2.74 (0.1071 − 0.1079)
2.21 − 2.23 (0.0870 − 0.0878)	2.48 − 2.50 (0.0976 − 0.0984)	2.75 − 2.77 (0.1083 − 0.1091)
2.24 − 2.26 (0.0882 − 0.0890)	2.51 − 2.53 (0.0988 − 0.0996)	2.78 − 2.80 (0.1094 − 0.1102)

12. MEASURE TOTAL PRELOAD

Using a torque wrench, measure the preload with the teeth of the drive pinion and ring gear in contact.

Total preload (at starting):

Drive pinion preload plus 0.4 − 0.6 N·m (4 − 6 kgf·cm, 3.5 − 5.2 in.·lbf)

13. INSPECT TOOTH CONTACT BETWEEN RING GEAR AND DRIVE PINION

(a) Remove the 10 bolts, side bearing retainer and differential case.

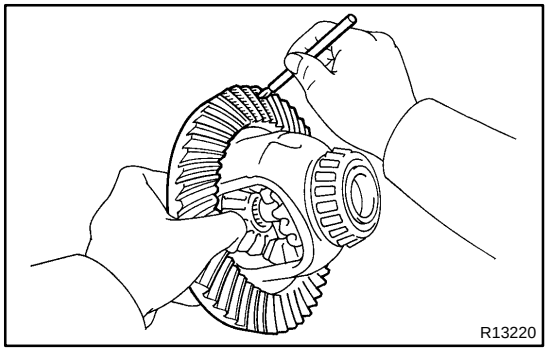

(b) Coat 3 or 4 teeth at three different positions on the ring gear with red lead primer.

(c) Install the differential case and side bearing retainer with the 10 bolts.

Torque: 69 N·m (700 kgf·cm, 51 ft·lbf)

(d) Hold the companion flange firmly and rotate the ring gear in both directions.

(e) Remove the 10 bolts, side bearing retainer and differential case.

(f) Inspect the tooth contact pattern.

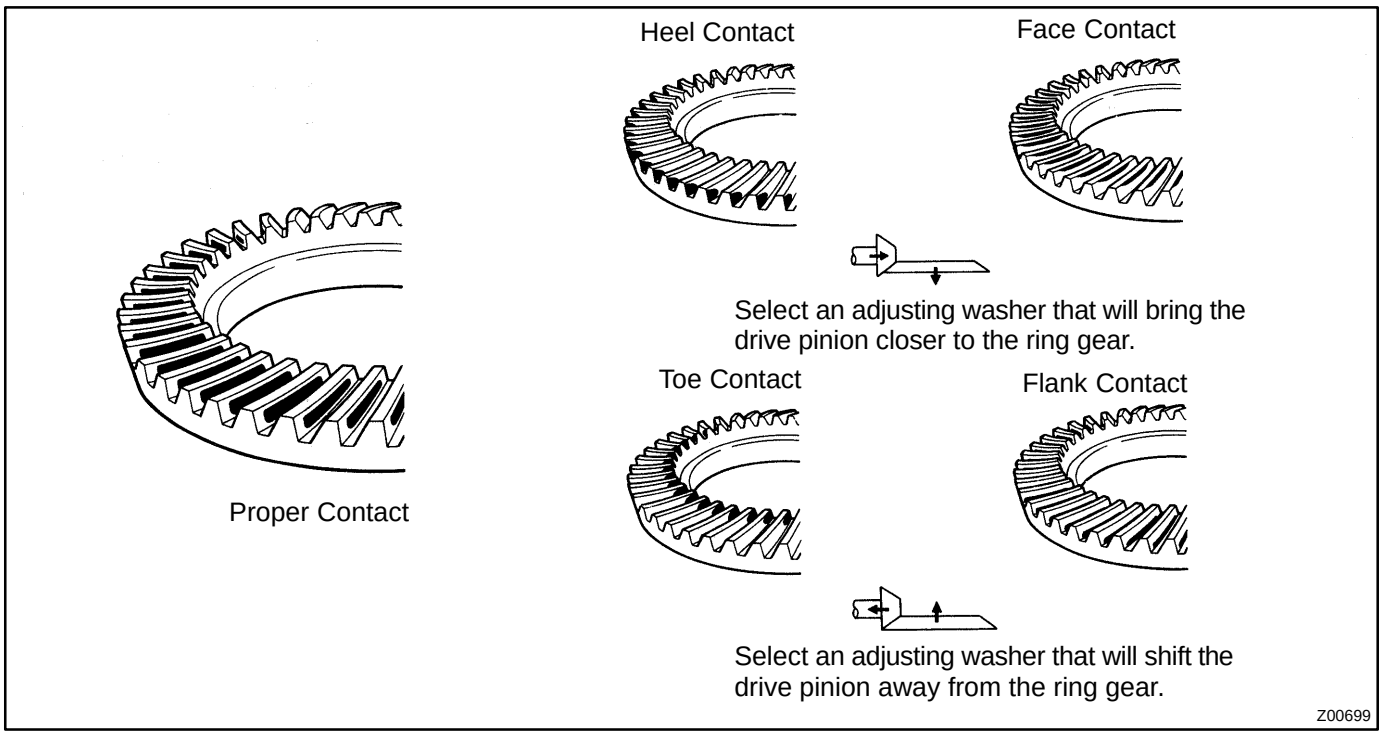

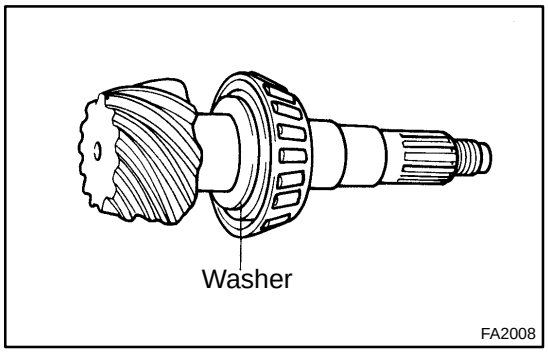

If the teeth are not contacting properly, use the following table to select a proper washer for correction.

Washer thickness:

Thickness mm (in.)	Thickness mm (in.)	Thickness mm (in.)
1.69 − 1.71 (0.0665 − 0.0673)	1.93 − 1.95 (0.0760 − 0.0768)	2.17 − 2.19 (0.0854 − 0.0862)
1.72 − 1.74 (0.0677 − 0.0685)	1.96 − 1.98 (0.0772 − 0.0780)	2.20 − 2.22 (0.0866 − 0.0874)
1.75 − 1.77 (0.0689 − 0.0697)	1.99 − 2.01 (0.0783 − 0.0791)	2.23 − 2.25 (0.0878 − 0.0886)
1.78 − 1.80 (0.0701 − 0.0709)	2.02 − 2.04 (0.0795 − 0.0803)	2.26 − 2.28 (0.0890 − 0.0898)
1.81 − 1.83 (0.0713 − 0.0720)	2.05 − 2.07 (0.0807 − 0.0815)	2.29 − 2.31 (0.0902 − 0.0909)
1.84 − 1.86 (0.0724 − 0.0732)	2.08 − 2.10 (0.0819 − 0.0827)	2.32 − 2.34 (0.0913 − 0.0921)
1.87 − 1.89 (0.0736 − 0.0744)	2.11 − 2.13 (0.0831 − 0.0839)	−
1.90 − 1.92 (0.0748 − 0.0756)	2.14 − 2.16 (0.0843 − 0.0850)	−

14. REMOVE COMPANION FLANGE AND OIL SLINGER (See page SA−41)

15. REMOVE REAR BEARING (See page SA−41)

16. INSTALL NEW BEARING SPACER, REAR BEARING AND OIL SLINGER

(a) Install a new bearing spacer and place the rear bearing and oil slinger.

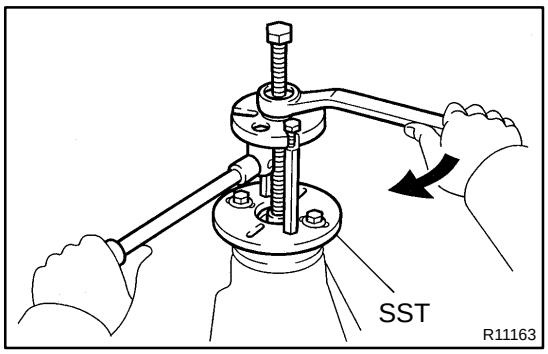

(b) Using SST and the companion flange, install the rear bearing, then remove the companion flange.
SST 09950−30012 (09951−03010, 09953−03010, 09954−03010, 09955−03030, 09956−03020)

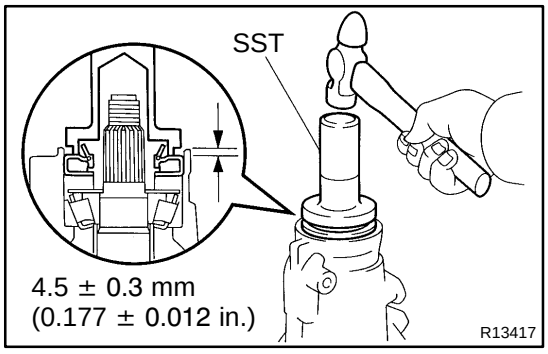

17. INSTALL OIL SEAL

(a) Using SST and a hammer, install a new oil seal.
SST 09554−22010
Oil seal drive in depth: 4.5 ± 0.3 mm (0.177 ± 0.012 in.)

(b) Coat the oil seal lip with MP grease.

18. INSTALL COMPANION FLANGE

(a) Place the companion flange on the drive pinion.

(b) Coat the threads of a new nut with hypoid gear oil.

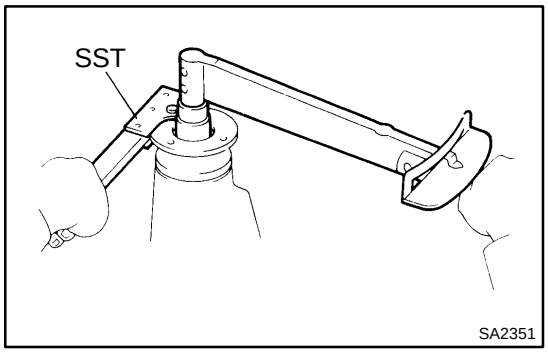

(c) Using SST to hold the flange, torque the nut.
SST 09330−00021
Torque: 108 N·m (1,100 kgf·cm, 80 ft·lbf)

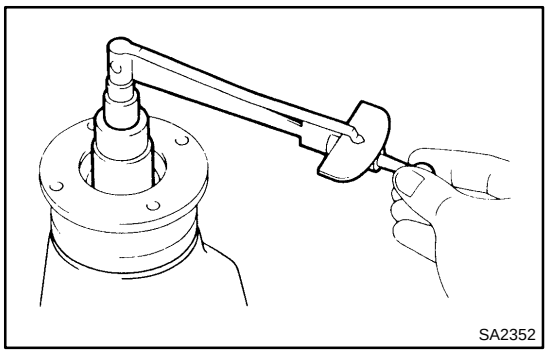

19. ADJUST DRIVE PINION PRELOAD

Using a torque wrench, measure the preload of the drive pinion using the backlash between the drive pinion and the ring gear.

Preload (at starting):
New bearing
1.2 − 1.9 N·m (12 − 19 kgf·cm, 10.4 − 16.5 in.·lbf)
Reused bearing
0.6 − 1.0 N·m (6 − 10 kgf·cm, 5.2 − 8.7 in.·lbf)

If the preload is greater than the specified value, replace the bearing spacer.

If the preload is less than the specified value, retighten the nut with 13 N·m (130 kgf·cm, 9 ft·lbf) of torque until the specified preload is reached.

Torque: 223 N·m (2,275 kgf·cm, 165 ft·lbf) or less

If the maximum torque is exceeded while retightening the nut, replace the bearing spacer and repeat the preload adjusting procedure. Do not loosen the nut to reduce the preload.

20. INSTALL DIFFERENTIAL CASE

21. INSTALL SIDE BEARING RETAINER

(a) Remove any old FIPG material and be careful not to drop oil on the contact surfaces of the differential carrier and side bearing retainer.

(b) Clean both installation surfaces of loose FIPG and oil material with gasoline or alcohol.

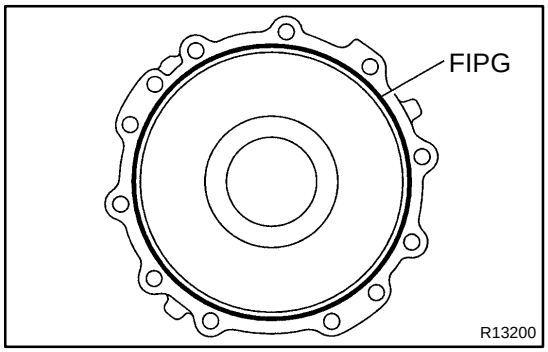

(c) Apply FIPG to the side bearing retainer, as shown in the illustration.

FIPG:
Part No. 08826−00090, THREE BOND 1281 or equivalent

HINT:
Install the side bearing retainer within 10 minutes after applying FIPG.

(d) Install the side bearing retainer with the 10 bolts.
Torque: 69 N·m (700 kgf·cm, 51 ft·lbf)

22. CHECK TOTAL PRELOAD (See step 12.)

23. RECHECK RING GEAR BACKLASH
(See page SA−41)

24. RECHECK TOOTH CONTACT BETWEEN RING GEAR AND DRIVE PINION (See step 13.)

25. CHECK COMPANION FLANGE RUNOUT (See page SA−41)

26. STAKE DRIVE PINION NUT

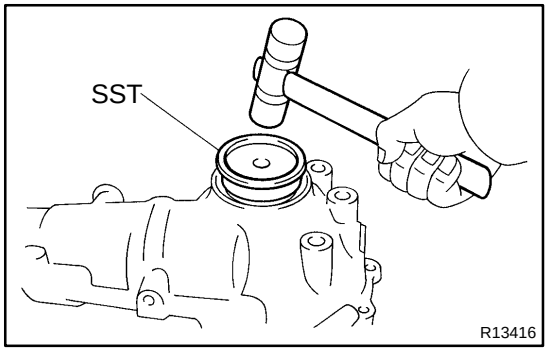

27. INSTALL SIDE OIL SEAL

(a) Using SST and a plastic hammer, install a new oil seal until its surface is flush with the differential carrier end.
SST 09608−32010

(b) Coat the oil seal lip with MP grease.

28. INSTALL INTERMEDIATE SHAFT NO. 1

(a) Install a new snap ring to the shaft.

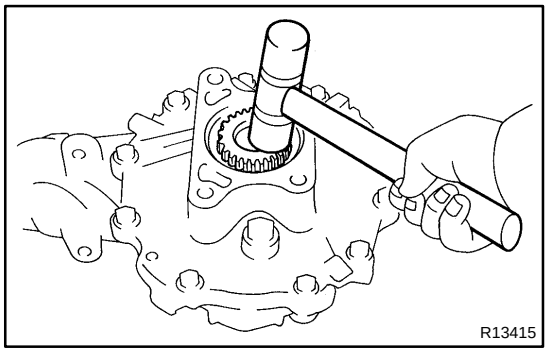

(b) Using a plastic hammer, install the shaft to the differential case.

(c) Check that there is 2 − 3 mm (0.08 − 0.12 in.) of play in the axial direction.

(d) Check that the intermediate shaft will not come out by trying to pull it completely out by hand.

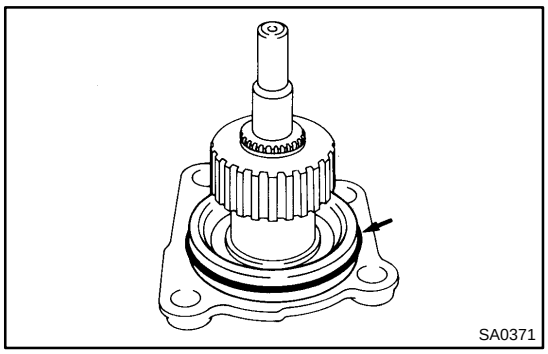
SA0371

29. INSTALL CLUTCH CASE TO DIFFERENTIAL TUBE

(a) Install a new O−ring to the tube.

(b) Coat the O−ring with MP grease.

(c) Install the clutch case to the tube.

(d) Using a torx® socket (E14), torque the 2 torx® bolts.
Torque: 78 N·m (800 kgf·cm, 58 ft·lbf)

30. INSTALL CLUTCH SLEEVE

31. INSTALL DIFFERENTIAL TUBE TO DIFFERENTIAL

(a) Remove any old FIPG material and be careful not to drop oil on the contact surfaces of the differential and clutch case.

(b) Clean both installation surfaces of loose FIPG and oil material with gasoline or alcohol.

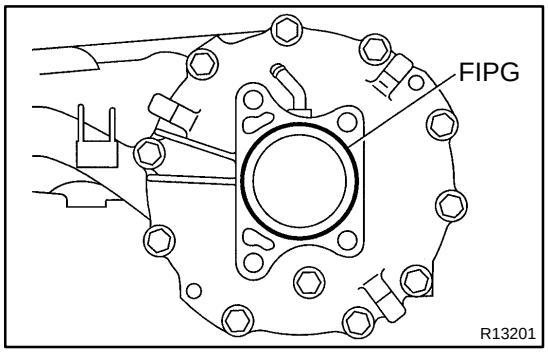

R13201

(c) Apply FIPG to the differential, as shown in the illustration.
FIPG:
Part No. 08826−00090, THREE BOND 1281 or equivalent

HINT:
Install the differential tube within 10 minutes after applying FIPG.

(d) Install the differential tube to the differential.

(e) Clean the threads of the 2 long torx® bolts and retainer bolt holes with toluene or trichlorethylene.

(f) Apply adhesive to 2 or 3 threads of the long bolts end.
Adhesive:
Part No. 08833−00070, THREE BOND 1324 or equivalent

(g) Using torx® socket (E14), torque the 4 torx® bolts.
Torque: 78 N·m (800 kgf·cm, 58 ft·lbf)

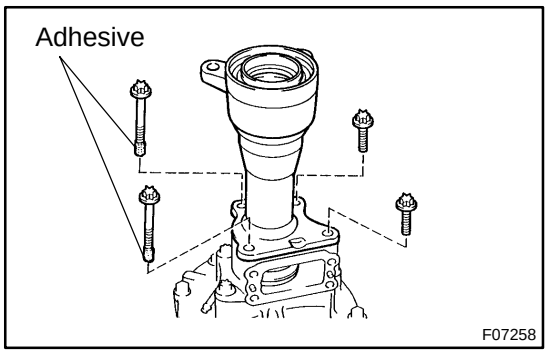

F07258

32. INSTALL A.D.D. ACTUATOR

(a) Remove any old FIPG material and be careful not to drop oil on the contact surfaces of the actuator and clutch case.

(b) Clean both installation surfaces of loose FIPG and oil material with gasoline or alcohol.

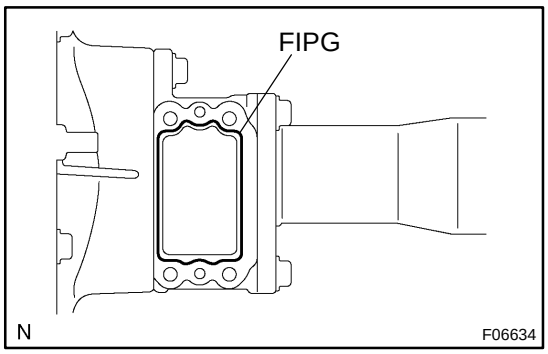

(c) Apply FIPG to the clutch case, as shown in the illustration.
FIPG:
Part No. 08826−00090, THREE BOND 1281 or equivalent

HINT:
Install the actuator within 10 minutes after applying FIPG.

(d) Install the A.D.D. actuator with the 4 bolts.
Torque: 21 N·m (210 kgf·cm, 15 ft·lbf)

SA09O−06

REMOVAL

1. DRAIN DIFFERENTIAL OIL

2. REMOVE DRIVE SHAFTS (See page SA−29)

3. DISCONNECT FRONT PROPELLER SHAFT (See page PR−10)

HINT:

Support the front propeller shaft securely.

4. REMOVE TUBE WITH WIRE HARNESS ASSEMBLY

(a) Disconnect the breather hose, vacuum hose and actuator connector.

(b) Remove the bolt and tube with wire harness assembly.

5. REMOVE FRONT DIFFERENTIAL CARRIER

(a) Support the front differential with a jack.

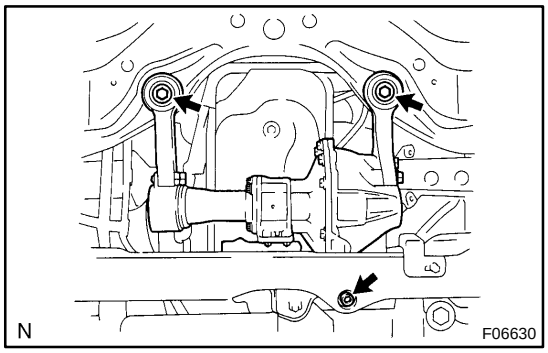

(b) Using a hexagon (12 mm) wrench, remove the rear mounting nut.

(c) Remove the 2 front mounting bolts.

(d) Lower the jack and remove the front differential carrier.

6. REMOVE DIFFERENTIAL MOUNTING CUSHIONS

(a) Remove the 2 bolts and rear mounting cushion.

(b) Remove the 5 bolts and 2 front mounting cushions.

SA1K4−02

REPLACEMENT

1. REPLACE COMPANION FLANGE DUST DEFLECTOR, IF NECESSARY

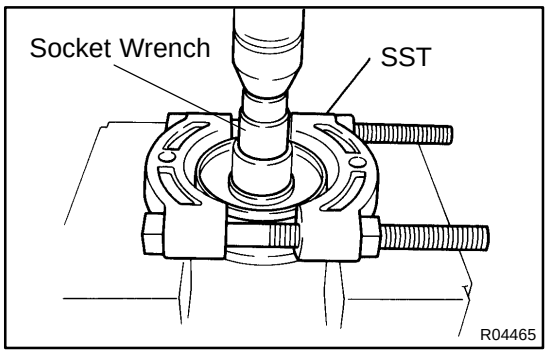

(a) Using SST, a socket wrench and a press, remove the dust deflector.
SST 09950−00020

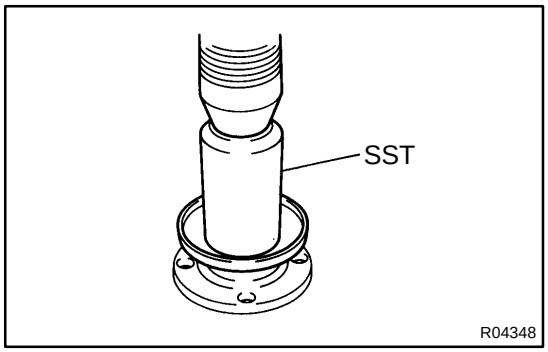

(b) Using SST and a press, install a new dust deflector.
SST 09636−20010

2. REPLACE INTERMEDIATE SHAFT NO. 2, IF NECESSARY

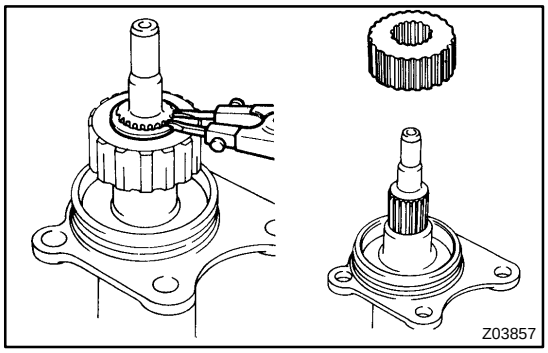

(a) Remove the clutch hub.
(1) Using a snap ring expander, remove the snap ring.
(2) Remove the clutch hub from the intermediate shaft No. 2.

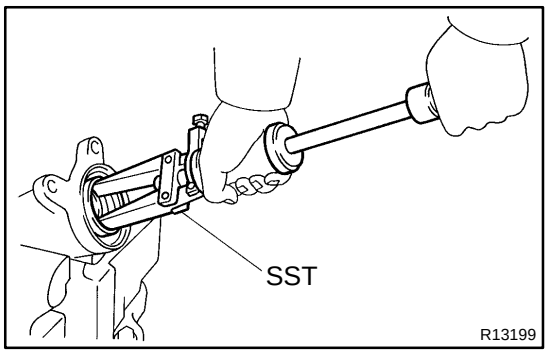

(b) Remove the oil seal.
Using SST, remove the oil seal from the tube.
SST 09308−00010

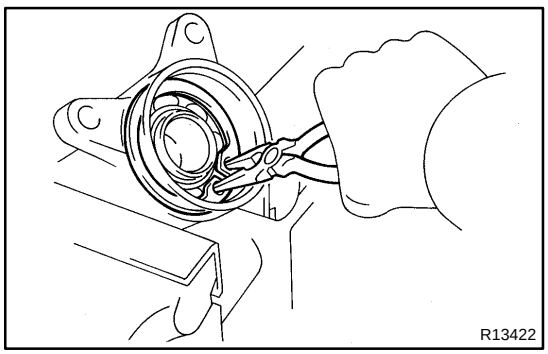

(c) Remove the intermediate shaft No. 2 from the tube.
(1) Using needle nose pliers, remove the snap ring.
(2) Remove the shaft from the tube.

(d) Remove the intermediate shaft No. 2 bearing.
(1) Using a snap ring expander, remove the snap ring.

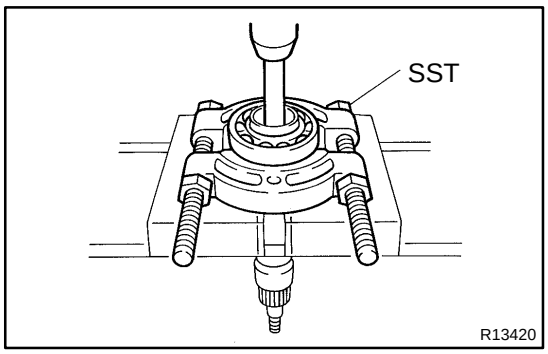

(2) Using SST, a brass bar and press, remove the bearing.

SST 09950−00020

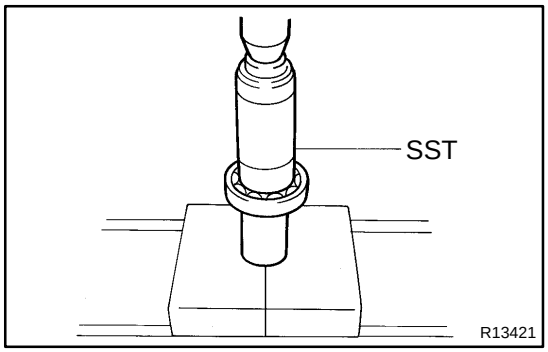

(e) Install a new intermediate shaft No. 2 bearing.
(1) Using SST and a press, install a new bearing.
SST 09309−37010
(2) Using a snap ring expander, install a new snap ring.

(f) Install the intermediate shaft No. 2 to the tube.
(1) Install the shaft into the tube.
(2) Using needle nose pliers, install a new snap ring.

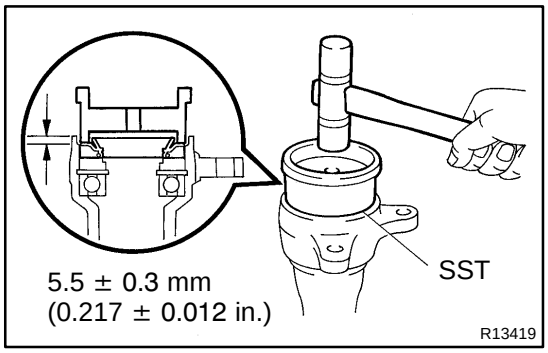

(g) Install a new oil seal.
(1) Using SST and a plastic hammer, install a new oil seal.
SST 09223−15020
Oil seal drive in depth: 5.5 ± 0.3 mm (0.217 ± 0.012 in.)
(2) Coat the oil seal lip with MP grease.

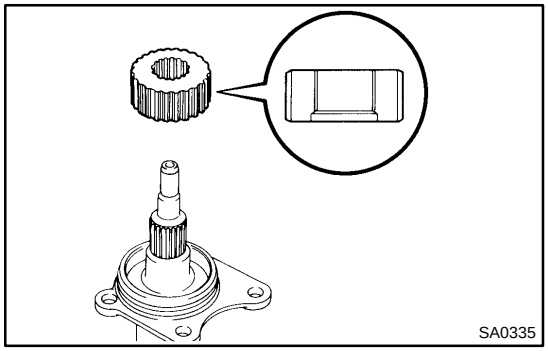

(h) Install the clutch hub.
(1) Install the clutch hub to the shaft.
(2) Using a snap ring expander, install a new snap ring.

FRONT DIFFERENTIAL REAR OIL SEAL

SA09L−06

COMPONENTS

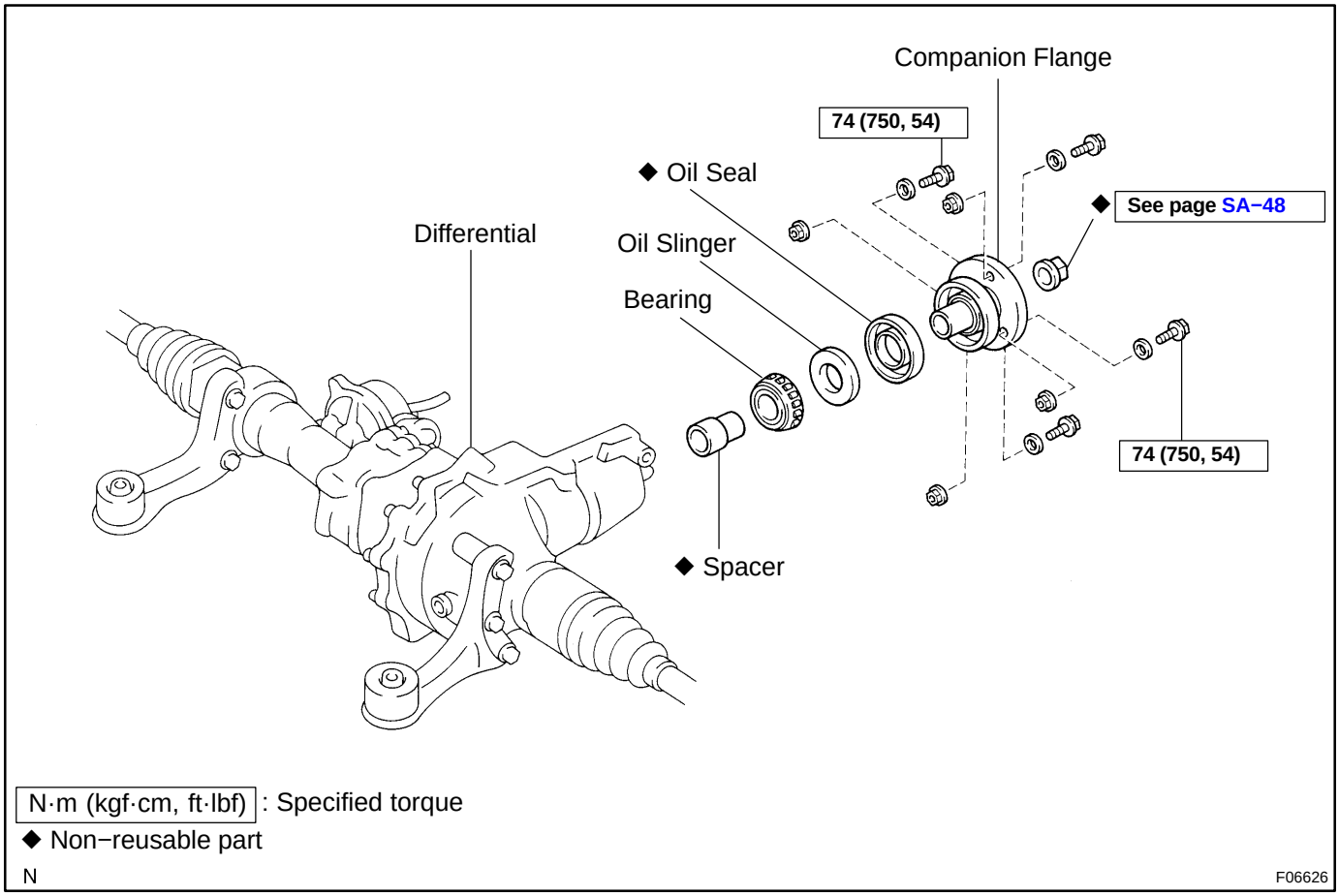

N·m (kgf·cm, ft·lbf) : Specified torque
◆ Non−reusable part

N

F06626

SA09M−09

REPLACEMENT

1. **REMOVE ENGINE UNDER COVER**
2. **DRAIN DIFFERENTIAL OIL**
3. **REMOVE FRONT PROPELLER SHAFT**
   (See page PR−10)

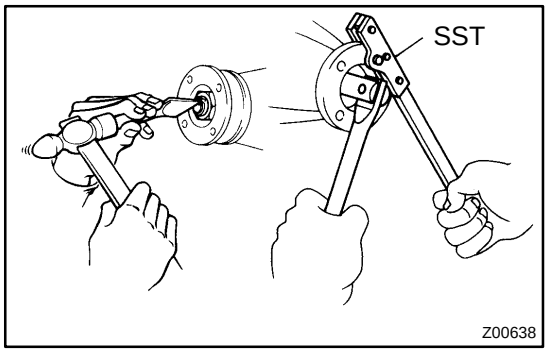

4. **REMOVE COMPANION FLANGE**

(a) Using a chisel and hammer, loosen the staked part of the nut.

(b) Using SST to hold the flange, remove the nut.
SST 09330−00021

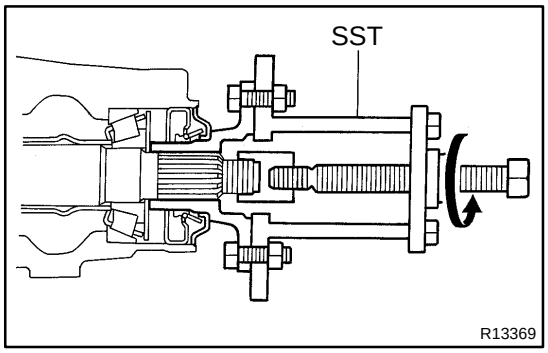

(c) Using SST, remove the companion flange.
SST 09950−30012 (09951−03010, 09953−03010, 09954−03010, 09955−03030, 09956−03020)

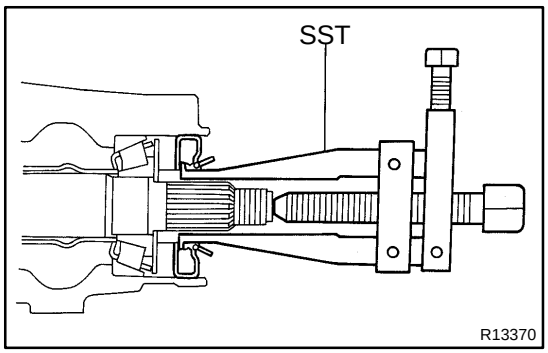

5. **REMOVE OIL SEAL AND OIL SLINGER**

(a) Using SST, remove the oil seal.
SST 09308−10010

(b) Remove the oil slinger.

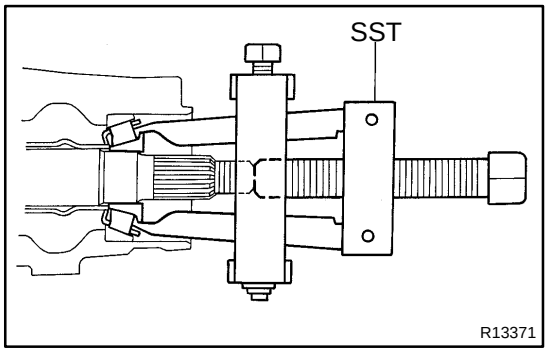

6. **REMOVE REAR BEARING AND BEARING SPACER**

(a) Using SST, remove the rear bearing from the drive pinion.
SST 09556−22010

(b) Remove the bearing spacer.

7. **INSTALL BEARING SPACER, REAR BEARING AND OIL SLINGER**

(a) Install a new bearing spacer and place the rear bearing and oil slinger.

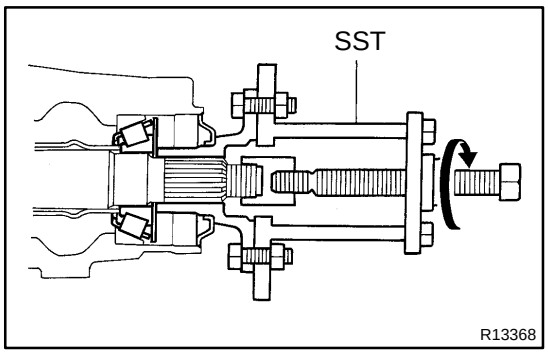

(b) Using SST and the companion flange, install the rear bearing, then remove the companion flange.
SST 09950−30012 (09951−03010, 09953−03010, 09954−03010, 09955−03030, 09956−03020)

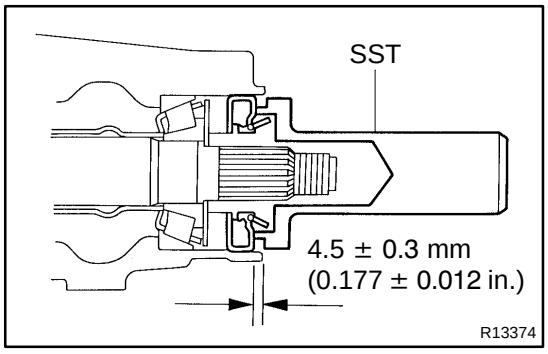

8. INSTALL OIL SEAL
(a) Coat a new oil seal lip with MP grease.
(b) Using SST and a hammer, install the oil seal.
SST 09554−22010
Oil seal drive in depth: 4.5 ± 0.3 mm (0.177 ± 0.012 in.)
9. INSTALL COMPANION FLANGE
(a) Place the companion flange on the drive pinion.
(b) Coat the threads of a new nut with hypoid gear oil.

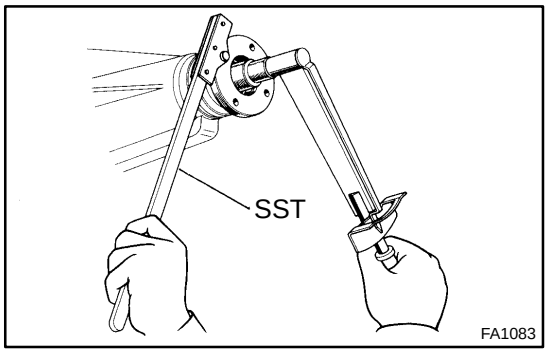

(c) Using SST to hold the flange, torque the nut.
SST 09330−00021
Torque: 108 N·m (1,100 kgf·cm, 80 ft·lbf)

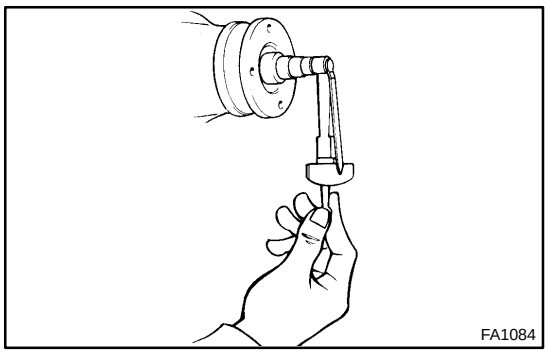

10. ADJUST DRIVE PINION PRELOAD (See page SA−48)
11. STAKE DRIVE PINION NUT
12. INSTALL FRONT PROPELLER SHAFT (See page PR−15)

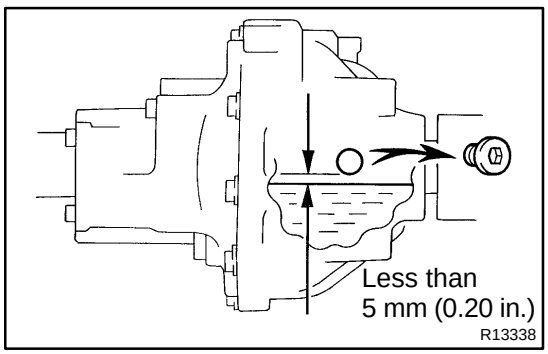

13. FILL DIFFERENTIAL WITH HYPOID GEAR OIL
Torque: 39 N·m (400 kgf·cm, 29 ft·lbf)
Oil type: Hypoid gear oil API GL−5
Recommended oil viscosity: SAE 75W−90
Capacity: 1.15 liters (1.22 US qts, 1.01 Imp. qts)
14. INSTALL ENGINE UNDER COVER

FRONT DRIVE SHAFT

COMPONENTS

SA09G−07

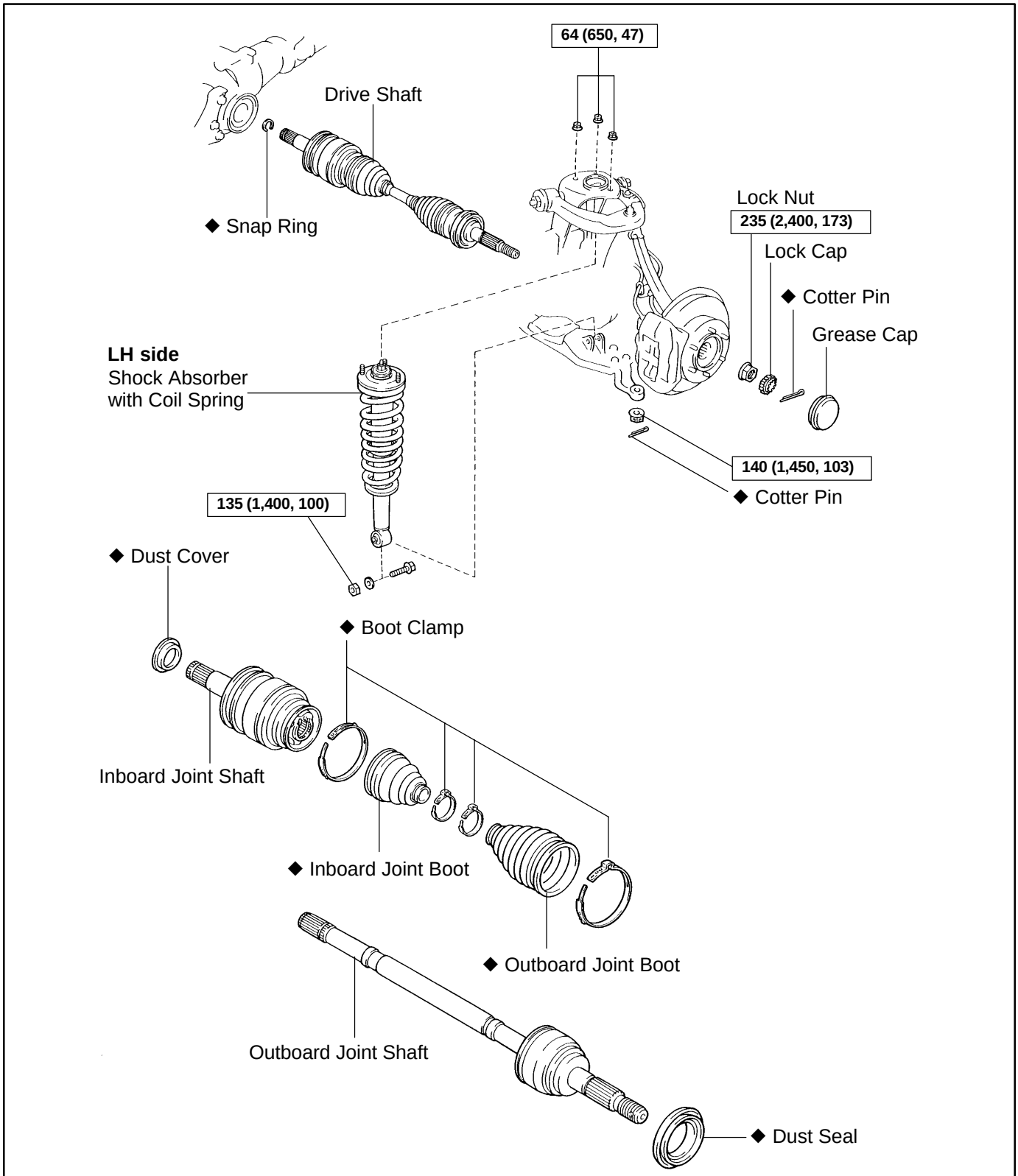

N·m (kgf·cm, ft·lbf) : Specified torque

◆ Non−reusable part

N

F06645

SA09I−04

DISASSEMBLY

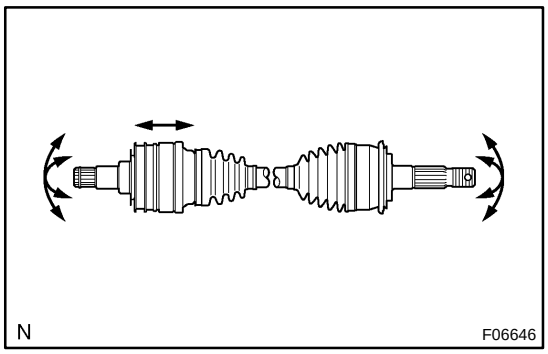

1. CHECK DRIVE SHAFT

(a) Check to see that there is no remarkable play in the outboard joint.

(b) Check to see that the inboard joint slides smoothly in the thrust direction.

(c) Check to see that there is no remarkable play in the radial direction of the inboard joint.

(d) Check the boots for damage.

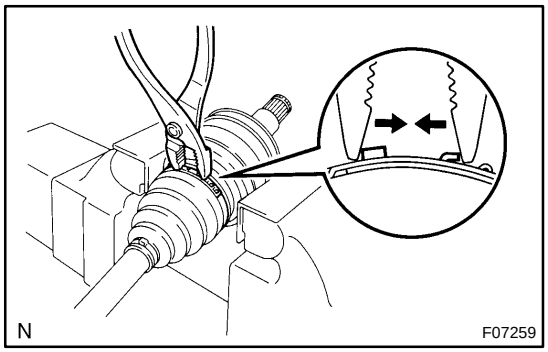

2. REMOVE INBOARD AND OUTBOARD JOINT BOOT CLAMPS

(a) Using pliers, pinch the claws to compress the large inboard joint boot clamp and remove it.

(b) Using a side cutter, cut the small inboard joint boot clamp and remove it.

(c) Using a side cutter, cut the 2 outboard joint boot clamps and remove them.

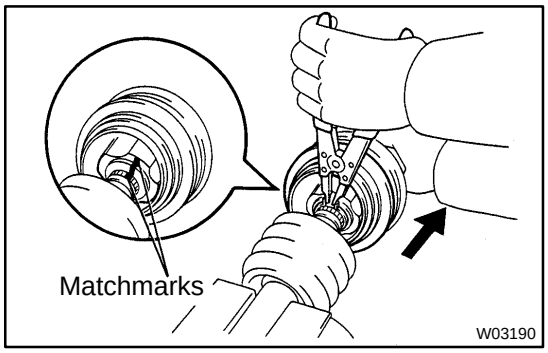

3. REMOVE INBOARD JOINT SHAFT FROM OUTBOARD JOINT SHAFT

(a) Place matchmarks on the inboard and outboard joint shafts.

NOTICE:

Do not punch the marks.

(b) Using a snap ring expander, pull out the outboard joint shaft while expanding the snap ring.

4. REMOVE INBOARD AND OUTBOARD JOINT BOOTS

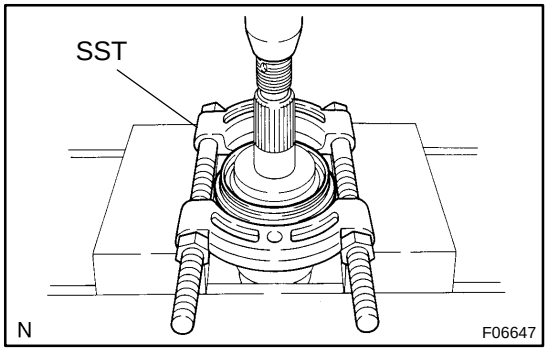

5. REMOVE DUST SEAL

Using SST and a press, remove the dust seal.

SST 09950−00020

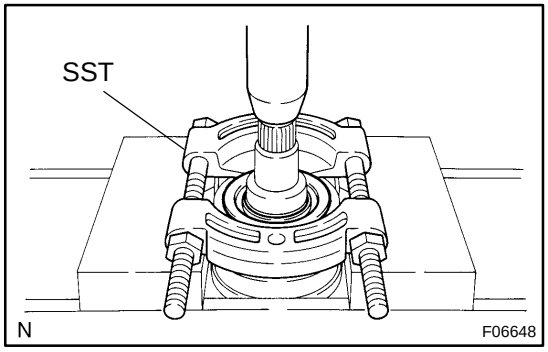

6. REMOVE DUST COVER

Using SST and a press, remove the dust cover.

SST 09950−00020

SA09K−04

INSTALLATION

1. INSTALL DRIVE SHAFT TO DIFFERENTIAL

(a) Install a new snap ring to the inboard joint shaft.

(b) Apply the gear oil to the inboard joint shaft and differential case sliding surface.

(c) Set the snap ring with the opening side facing downward.

(d) Using a brass bar and hammer, install the drive shaft.

NOTICE:

Be careful not to damage the dust cover and oil seal.

HINT:

Whether the inboard joint shaft is in contact with the pinion shaft or not can be known from the sound or feeling when driving it in.

(e) Check that there is 2 − 3 mm (0.08 − 0.12 in.) of play in the axial direction.

(f) Check that the drive shaft cannot be removed by hand.

2. LH drive shaft:

INSTALL LH SHOCK ABSORBER (See page SA−68)

3. CONNECT DRIVE SHAFT TO STEERING KNUCKLE

NOTICE:

Be careful not to damage the oil seal, boots and dust seal.

4. CONNECT LOWER SUSPENSION ARM TO LOWER BALL JOINT

(a) Connect the lower suspension arm to the lower ball joint.

(b) Install the nut and a new cotter pin.

If the holes for the cotter pin are not aligned, tighten the nut further up to 60˚.

HINT:

Face the hole for the cotter pin forward.

Torque: 140 N·m (1,450 kgf·cm, 103 ft·lbf)

5. INSTALL DRIVE SHAFT LOCK NUT

(a) While applying brakes, install the nut.

Torque: 235 N·m (2,400 kgf·cm, 173 ft·lbf)

(b) Install the lock cap and a new cotter pin.

If the holes for the cotter pin are not aligned, tighten the nut further up to 60˚.

6. FILL DIFFERENTIAL WITH HYPOID GEAR OIL (See page SA−36)

7. INSTALL ENGINE UNDER COVER

8. INSTALL FRONT WHEEL

Torque: 110 N·m (1,150 kgf·cm, 83 ft·lbf)

SA1K3−02

REASSEMBLY

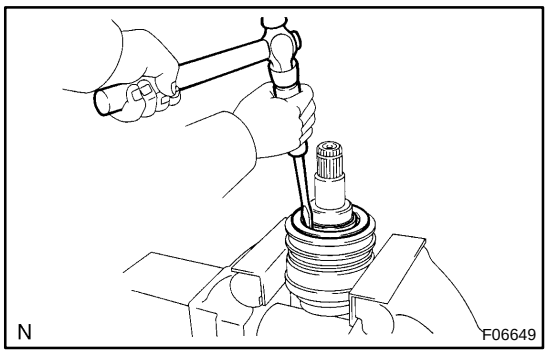

1. INSTALL DUST COVER

Using a screwdriver and hammer, install a new dust cover.

2. INSTALL DUST SEAL

Using a screwdriver and hammer, install a new dust seal.

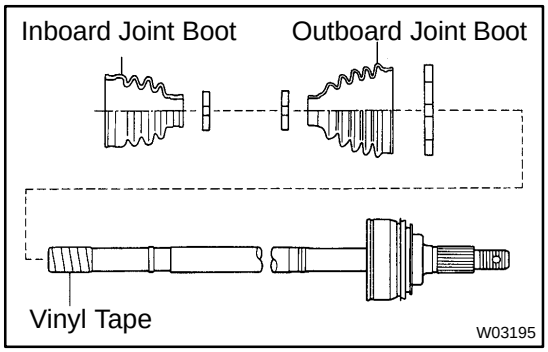

3. TEMPORARILY INSTALL OUTBOARD AND INBOARD JOINT BOOTS AND NEW BOOT CLAMPS

HINT:

- Before installing the boots, wrap the spline of the outboard joint shaft with vinyl tape to prevent the boots from being damaged.
- Before installing the boots, place 3 new clamps to the small boot ends and large boot end (outboard joint side).

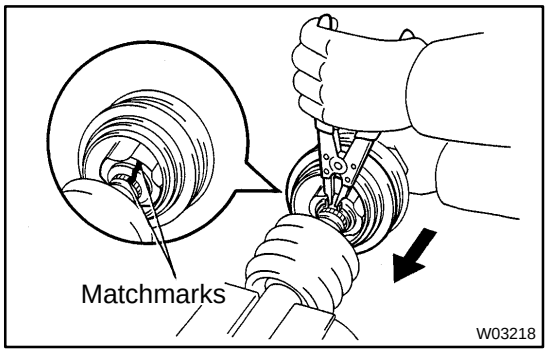

4. INSTALL INBOARD JOINT SHAFT TO OUTBOARD JOINT SHAFT

Align the matchmarks placed before disassembly, and using a snap ring expander, put in the inboard joint shaft while expanding the snap ring.

5. INSTALL BOOT TO OUTBOARD JOINT

Before assembling the boot, pack the outboard joint and boot with grease in the boot kit.

Grease capacity (Color = Black):
205 − 225 g (7.23 − 7.94 oz.)

6. INSTALL BOOT TO INBOARD JOINT SHAFT

(a) Pack the inboard joint and boot with grease in the boot kit.
Grease capacity (Color = Black):
190 − 210 g (6.70 − 7.41 oz.)

(b) Temporarily install the boot to the inboard joint shaft.

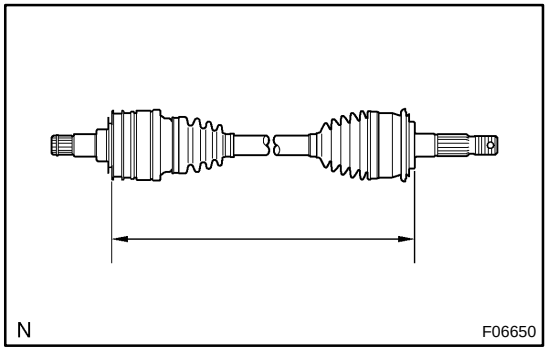

7. CHECK DRIVE SHAFT LENGTH

(a) Make sure that the 2 boots are on the shaft groove.

(b) Make sure that the 2 boots are not stretched or contracted when the drive shaft is at standard length.
Drive shaft standard length:
523.5 ± 2.0 mm (20.610 ± 0.079 in.)

8. INSTALL LARGE INBOARD JOINT BOOT CLAMP TO INBOARD JOINT SHAFT BOOT

(a) Place the large inboard joint boot clamp.

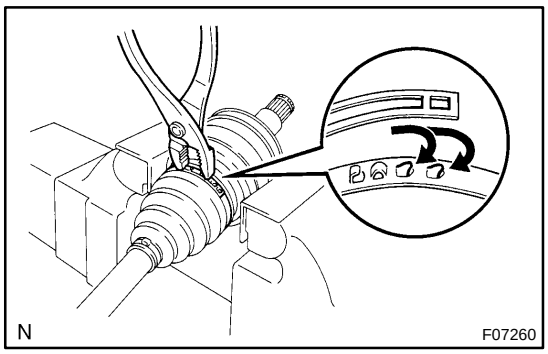

(b) Using pliers, compress the clamp and attach the claws.

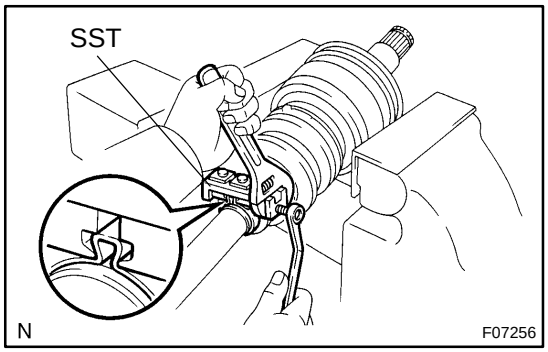

9. INSTALL OTHER BOOT CLAMPS TO BOTH BOOTS

(a) Secure the clamp onto the boot.

(b) Place SST onto the clamp.
SST 09521−24010

(c) Tighten the SST so that the clamp is pinched.

NOTICE:

Do not overtighten the SST.

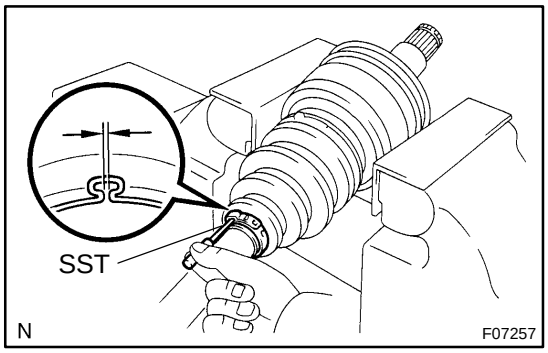

(d) Using SST, adjust the clearance of the clamp.
SST 09240−00020
Clearance: 1.0 − 1.5 mm (0.039 − 0.059 in.)

10. CHECK DRIVE SHAFT (See page SA−31)

SA09H−06

REMOVAL

1. REMOVE FRONT WHEEL

2. REMOVE ENGINE UNDER COVER

3. DRAIN DIFFERENTIAL OIL

4. REMOVE DRIVE SHAFT LOCK NUT

(a) Using a screwdriver and hammer, remove the grease cap.

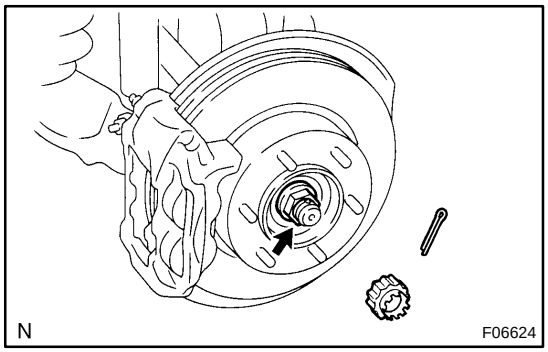

(b) Remove the cotter pin and lock cap.

(c) While applying the brakes, remove the lock nut.

5. DISCONNECT LOWER SUSPENSION ARM FROM LOWER BALL JOINT

(a) Remove the cotter pin and nut.

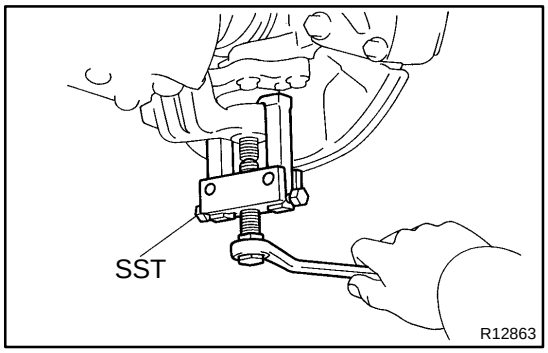

(b) Using SST, disconnect the lower suspension arm from the lower ball joint.

SST 09628−62011

6. DISCONNECT DRIVE SHAFT FROM STEERING KNUCKLE

(a) Using a plastic hammer, disengage the drive shaft from the axle hub.

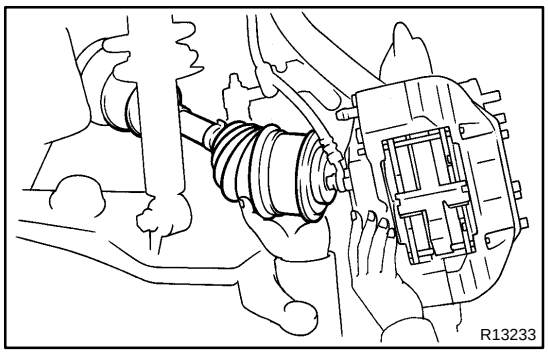

(b) Push the steering knuckle outward and disconnect the drive shaft from the steering knuckle.

NOTICE:

Be careful not to damage the oil seal, boots and dust seal.

7. LH drive shaft:

REMOVE LH SHOCK ABSORBER (See page SA−63)

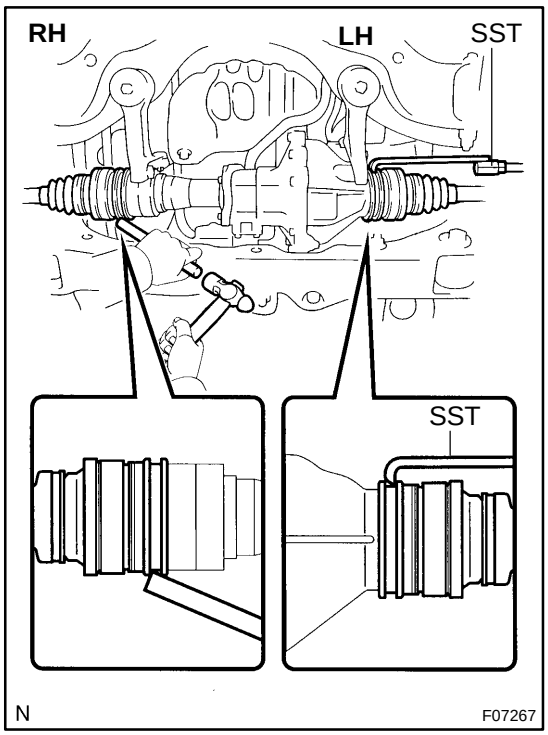

8. REMOVE DRIVE SHAFT

(a) RH drive shaft:
Using a brass bar and hammer, remove the RH drive shaft.

NOTICE:

Be careful not to damage the dust cover and oil seal.

(b) LH drive shaft:
Using SST, remove the LH drive shaft.
SST 09520−01010, 09520−24010 (09520−32040)

NOTICE:

Be careful not to damage the dust cover and oil seal.

(c) Using a screwdriver, remove the snap ring from the inboard joint shaft.

SA0AX−08

COMPONENTS

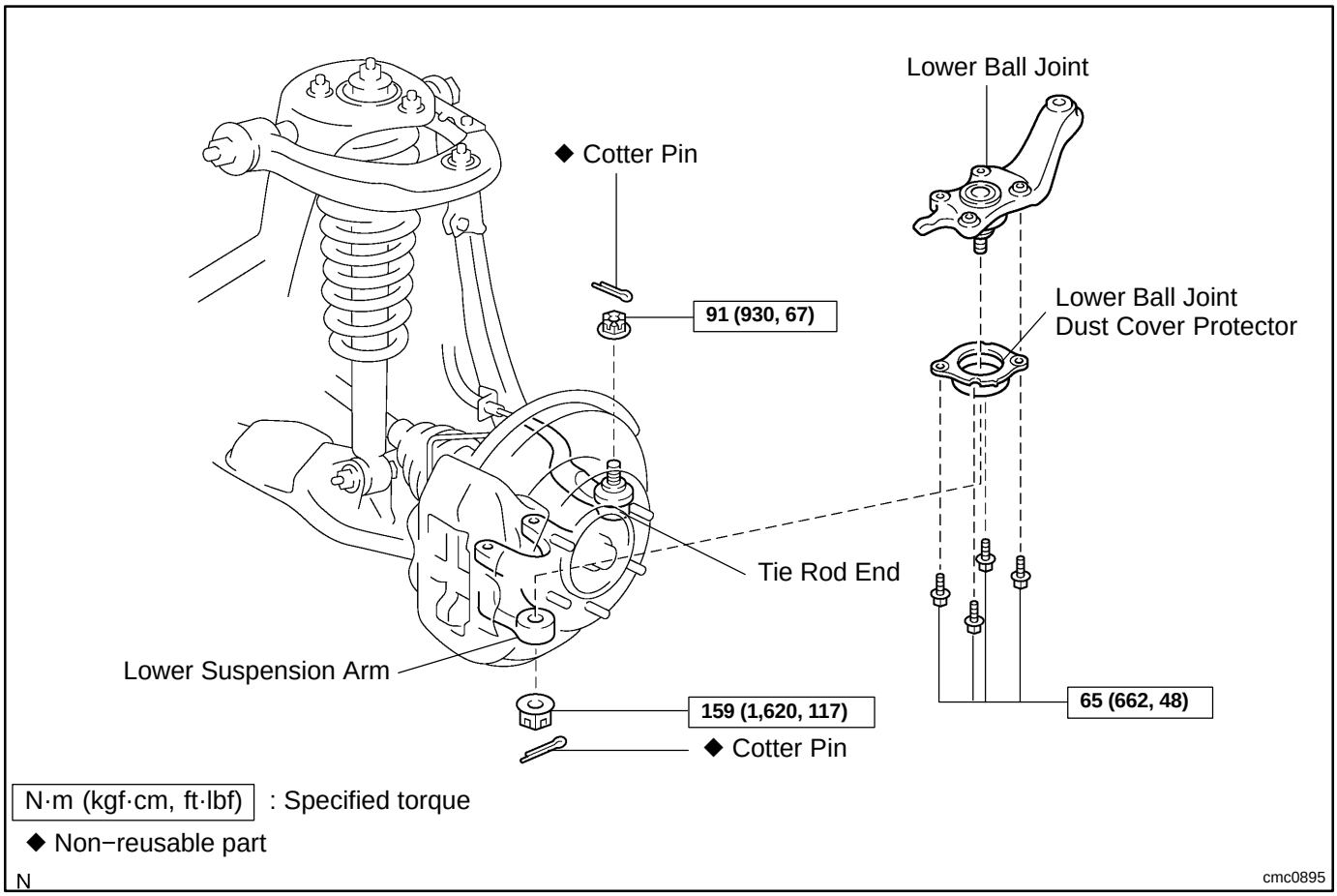

N·m (kgf·cm, ft·lbf) : Specified torque

◆ Non−reusable part

N

cmc0895

SA0AZ−05

INSPECTION

1. INSPECT LOWER BALL JOINT BOOT FOR DAMAGE

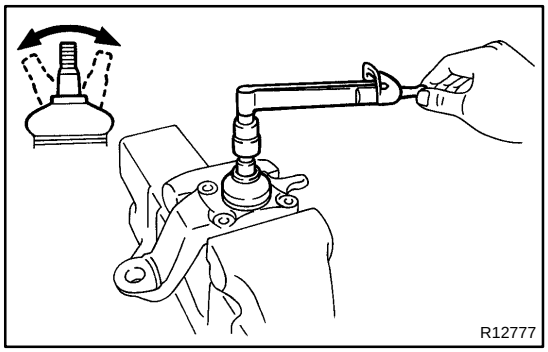

2. INSPECT LOWER BALL JOINT FOR ROTATION CONDITION

(a) As shown in the illustration, flip the ball joint stud back and forth 5 times before installing the nut.

(b) Using a torque wrench, turn the nut continuously 1 turn per 2 − 4 seconds and take the torque reading on the 5th turn.

Turning torque:
0.1 − 2.5 N·m (1 − 25 kgf·cm, 1 − 22 in.·lbf)

SA0B0−03

INSTALLATION

1. INSTALL LOWER BALL JOINT WITH LOWER BALL JOINT DUST COVER PROTECTOR

(a) While lifting the upper suspension arm and steering knuckle, install the lower ball joint.

(b) Install the lower ball joint dust cover protector.

(c) Temporarily install the 4 bolts to the lower ball joint.

(d) Install the set nut to hold the lower ball joint to the lower suspension arm and a new cotter pin.

Torque: 159 N·m (1,620 kgf·cm, 117 ft·lbf)

If the holes for the cotter pin are not aligned, tighten the nut further up to 60°.

2. CONNECT TIE ROD END

Connect the tie rod end to the lower ball joint with the nut and a new cotter pin.

Torque: 91 N·m (930 kgf·cm, 67 ft·lbf)

If the holes for the cotter pin are not aligned, tighten the nut further up to 60°.

3. TIGHTEN LOWER BALL JOINT SET 4 BOLTS

Torque: 65 N·m (662 kgf·cm, 48 ft·lbf)

4. INSTALL FRONT WHEEL

Torque: 110 N·m (1,150 kgf·cm, 83 ft·lbf)

5. CHECK FRONT WHEEL ALIGNMENT (See page SA−5)

FRONT LOWER BALL JOINT

SA0AW−05

ON−VEHICLE INSPECTION

INSPECT LOWER BALL JOINT EXCESSIVE PLAY ON−VEHICLE

(a) Remove the front wheel and install the hub nuts to the disc.

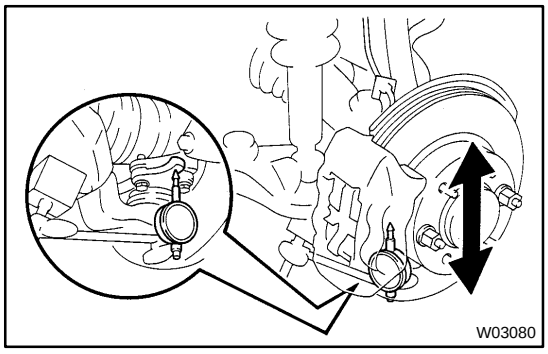

(b) Using a dial indicator, check the lower ball joint for excessive play when you push the hub nuts up and down with a force of 294 N (30 kgf, 66 lbf).
Maximum: 0.5 mm (0.020 in.)

SA0AY−07

REMOVAL

1. REMOVE FRONT WHEEL

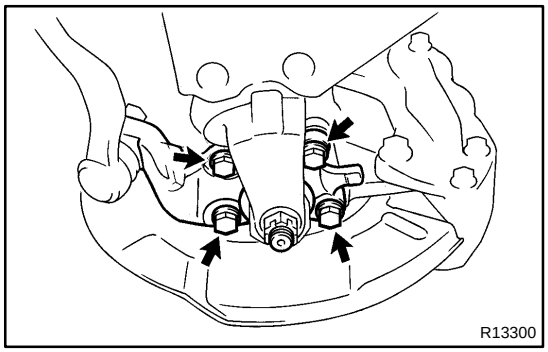

2. LOOSEN 4 LOWER BALL JOINT SET BOLTS

HINT:

Do not remove the bolts.

3. DISCONNECT TIE ROD END

(a) Remove the cotter pin and nut from the tie rod end.

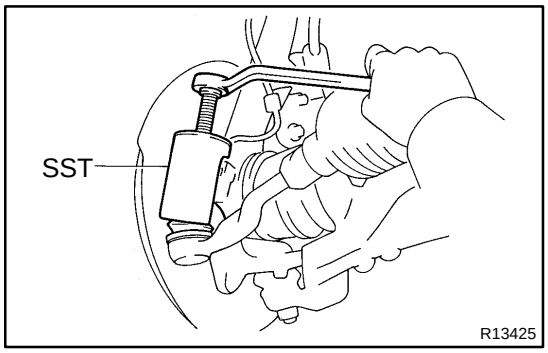

(b) Using SST, disconnect the tie rod end from the lower ball joint.

SST 09610−20012

4. REMOVE LOWER BALL JOINT WITH LOWER BALL JOINT DUST COVER PROTECTOR

(a) Remove the cotter pin and nut from the lower ball joint.

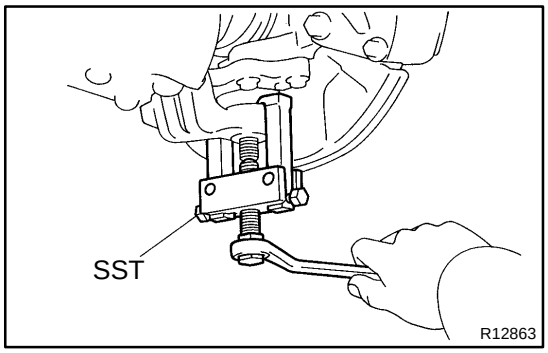

(b) Using SST, disconnect the lower ball joint from the lower suspension arm.

SST 09628−62011

(c) Remove the 4 lower ball joint set bolts.

(d) Remove the lower ball joint dust cover protector.

(e) While lifting the upper suspension arm and steering knuckle, remove the lower ball joint.

(f) Support the upper suspension arm and steering knuckle securely.

FRONT LOWER SUSPENSION ARM

SA0AJ−08

COMPONENTS

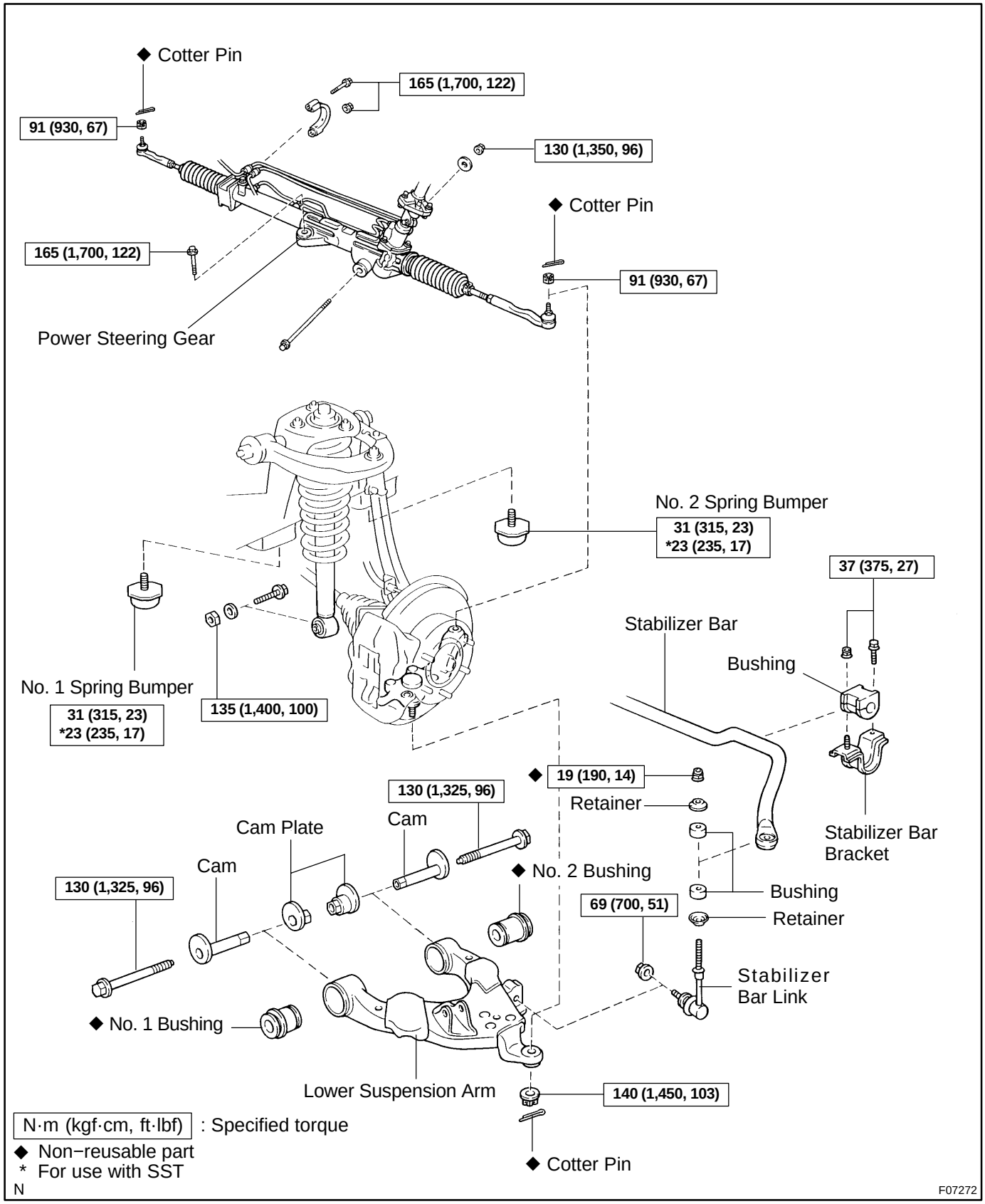

SA1KK−03

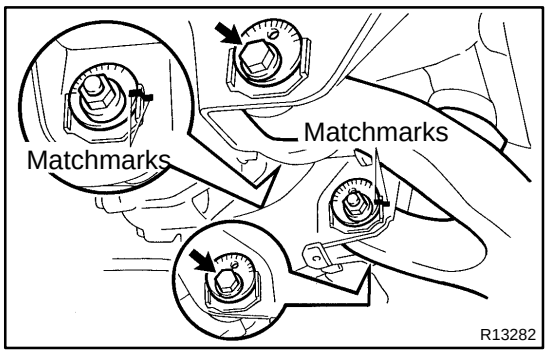

INSTALLATION

1. INSTALL LOWER SUSPENSION ARM TO CHASSIS FRAME

Install the lower suspension arm with the 2 cams, bolts and cam plates while slightly shifting the power steering gear rearward.

Torque: 130 N·m (1,325 kgf·cm, 96 ft·lbf)

NOTICE:

Do not damage the power steering gear tubes.

HINT:

After stabilizing the suspension, align the matchmarks on the front and rear cam plates and chassis frame, and torque the bolts.

2. CONNECT LOWER BALL JOINT TO LOWER SUSPENSION ARM

Connect the lower ball joint and install the nut and a new cotter pin.

Torque: 140 N·m (1,450 kgf·cm, 103 ft·lbf)

If the holes for the cotter pin are not aligned, tighten the nut further up to 60°.

3. CONNECT SHOCK ABSORBER TO LOWER SUSPENSION ARM

Torque: 135 N·m (1,400 kgf·cm, 100 ft·lbf)

4. CONNECT STABILIZER BAR LINK TO LOWER SUSPENSION ARM

Torque: 69 N·m (700 kgf·cm, 51 ft·lbf)

HINT:

If the ball joint turns together with the nut, use a hexagon (6 mm) wrench to hold the stud.

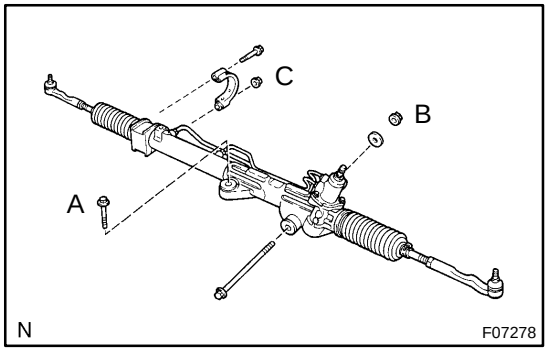

5. INSTALL POWER STEERING GEAR

Torque:

A bolt: 165 N·m (1,700 kgf·cm, 122 ft·lbf)

B nut: 130 N·m (1,350 kgf·cm, 96 ft·lbf)

C bolt and nut: 165 N·m (1,700 kgf·cm, 122 ft·lbf)

6. CONNECT RH AND LH TIE ROD ENDS

Connect the RH and LH tie rod ends to the lower ball joints with the nuts and new cotter pins.

Torque: 91 N·m (930 kgf·cm, 67 ft·lbf)

If the holes for the cotter pin are not aligned, tighten the nut further up to 60°.

7. INSTALL RH AND LH FRONT WHEELS

Torque: 110 N·m (1,150 kgf·cm, 83 ft·lbf)

8. CHECK FRONT WHEEL ALIGNMENT (See page SA−5)

SA1KI−02

REMOVAL

1. REMOVE RH AND LH FRONT WHEELS

2. DISCONNECT RH AND LH TIE ROD ENDS

(a) Remove the cotter pin and nut.

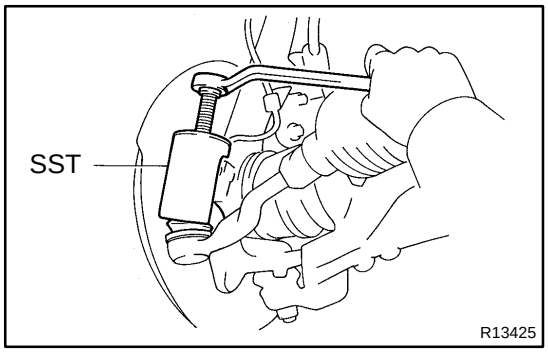

(b) Using SST, disconnect the tie rod end from the lower ball joint.
SST 09610−20012

(c) Use the same procedures described above to the other side.

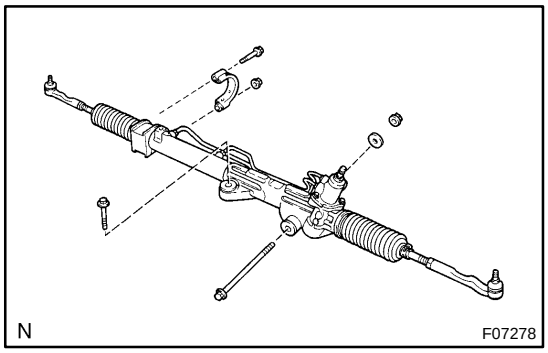

3. REMOVE POWER STEERING GEAR SET BOLTS AND NUTS

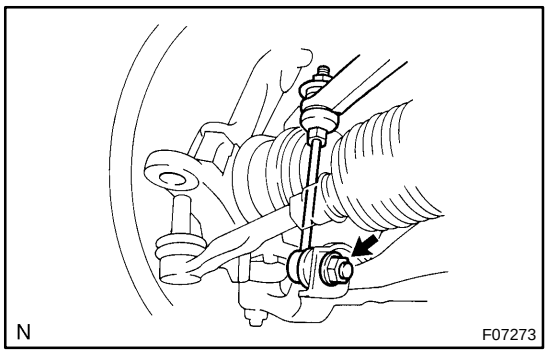

4. DISCONNECT STABILIZER BAR LINK FROM LOWER SUSPENSION ARM

Remove the nut and disconnect the stabilizer bar link from the lower suspension arm.

HINT:

If the ball joint turns together with the nut, use a hexagon (6 mm) wrench to hold the stud.

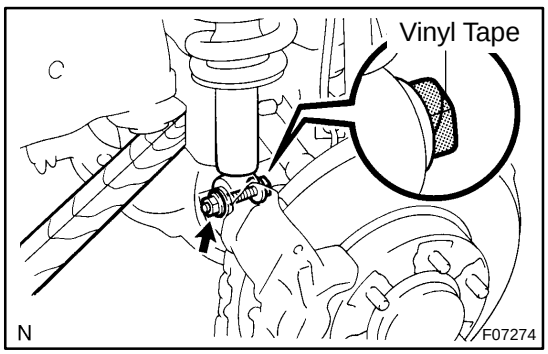

5. DISCONNECT SHOCK ABSORBER FROM LOWER SUSPENSION ARM

(a) Remove the shock absorber lower side set nut and washer.

NOTICE:

Do not remove the bolt.

(b) Wrap the bolt's head with vinyl tape to prevent the drive shaft boot from being damaged.

(c) Pry down the lower suspension arm to remove the bolt and disconnect the shock absorber.

6. DISCONNECT LOWER BALL JOINT FROM LOWER SUSPENSION ARM

(a) Remove the cotter pin and nut.

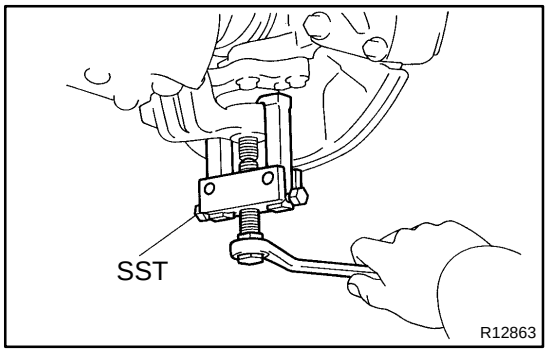

(b) Using SST, disconnect the lower ball joint from the lower suspension arm.
SST 09628−62011

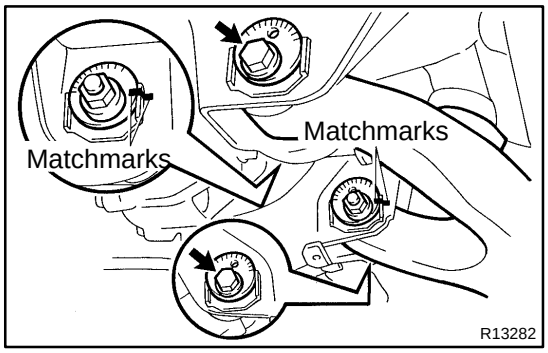

7. REMOVE LOWER SUSPENSION ARM

(a) Place matchmarks on the front and rear cam plates and chassis frame.

(b) Remove the 2 cam plates, bolts, cams and lower suspension arm while slightly shifting the power steering gear rearward.

NOTICE:
Do not damage the power steering gear tubes.

SA1KJ−03

REPLACEMENT

1. REPLACE BUSHING

(a) Using a chisel and hammer, pry up the flange of the bushing.

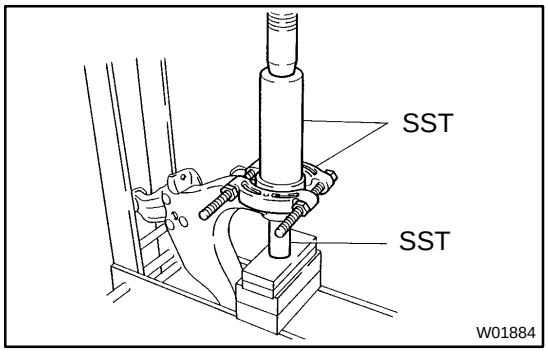

(b) Using SST and a press, remove the bushing.
SST 09613−26010, 09632−36010, 09950−00020

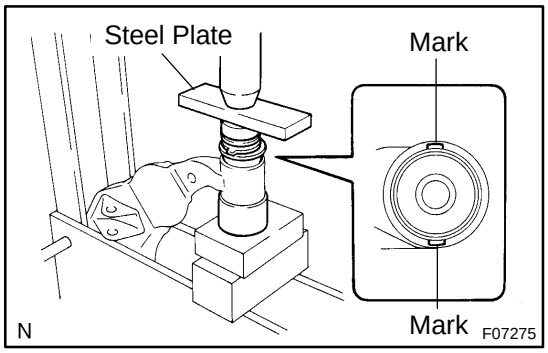

(c) Using SST, a press and steel plate, install a new No. 1 bushing.
SST 09502−12010, 09631−12090

HINT:
Before installing the bushing, set it in the correct direction, as shown in the illustration.

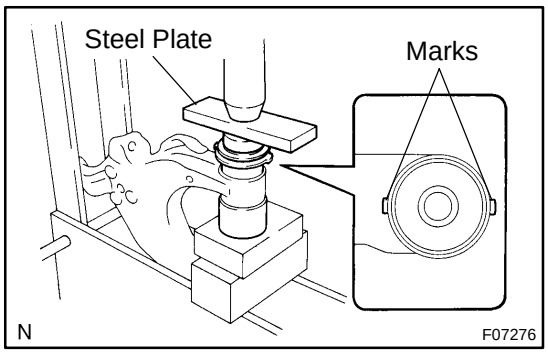

(d) Using SST, a press and steel plate, install a new No. 2 bushing.
SST 09631−12090, 09950−60020 (09951−00680)

HINT:
Before installing the bushing, set it in the correct direction, as shown in the illustration.

2. REPLACE NO. 1 AND NO. 2 SPRING BUMPERS ON−VEHICLE

(a) Remove the front wheel.

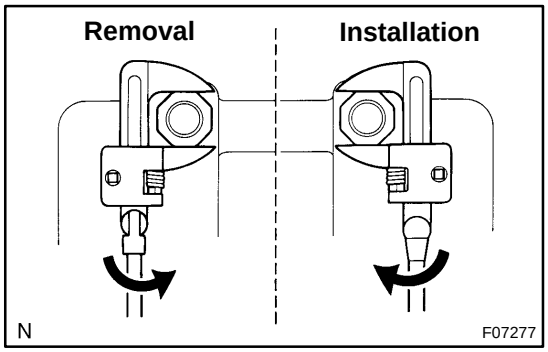

(b) Using SST, replace the No. 1 spring bumper.
SST 09922−10010

HINT:
At the time of installation, use a torque wrench with a fulcrum length of 345 mm (13.58 in.).

Torque: 23 N·m (235 kgf·cm, 17 ft·lbf)

(c) Replace the No. 2 spring bumper.

(1) Remove the stabilizer bar (See page SA−89).

(2) Using SST, replace the No. 2 spring bumper.

SST 09922−10010

HINT:

At the time of installation, use a torque wrench with a fulcrum length of 345 mm (13.58 in.).

Torque: 23 N·m (235 kgf·cm, 17 ft·lbf)

(3) Install the stabilizer bar (See page SA−91).

(d) Install the front wheel.

Torque: 110 N·m (1,150 kgf·cm, 83 ft·lbf)

FRONT SHOCK ABSORBER

SA09Z−07

COMPONENTS

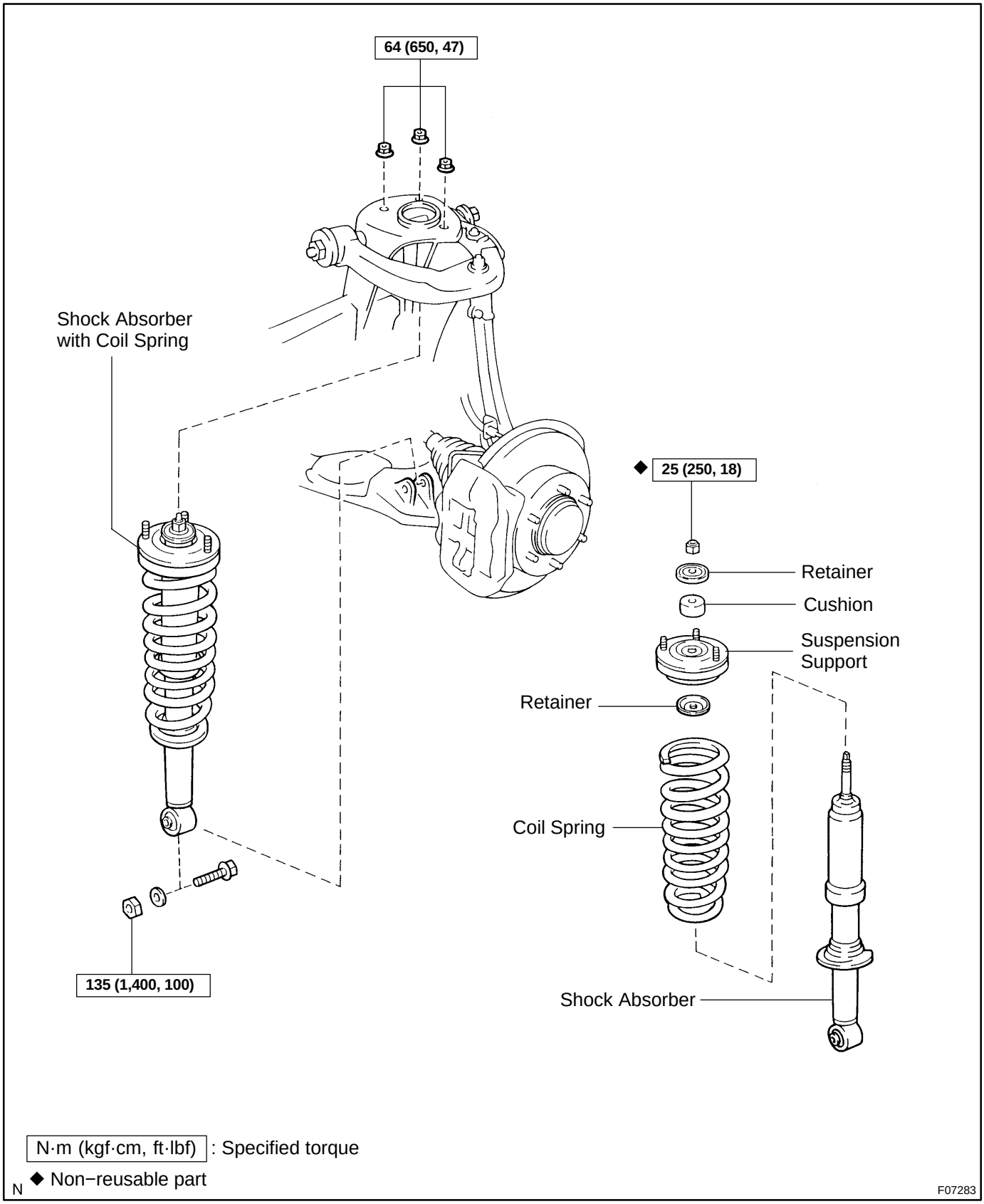

N·m (kgf·cm, ft·lbf) : Specified torque

◆ Non−reusable part

N

F07283

SA0A1−05

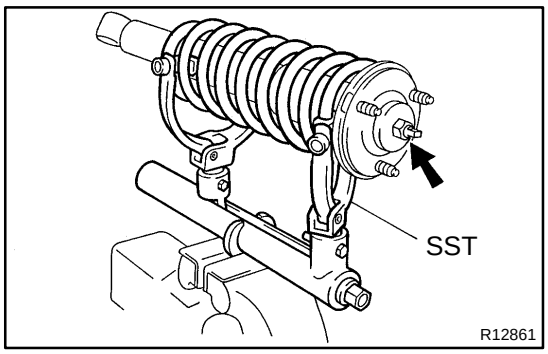

DISASSEMBLY

REMOVE SUSPENSION SUPPORT AND COIL SPRING

(a) Using SST, compress the coil spring.
SST 09727−30021 (09727−00010, 09727−00021, 09727−00031)

NOTICE:

- **Make sure that the suspension support is free from the coil spring.**
- **Do not compress the coil spring more than necessary.**
- **Do not use an impact wrench. It will damage the SST.**
- **Do not place yourself over the top of the shock absorber.**

(b) Remove the suspension support center nut.

(c) Remove the 2 retainers, cushion, suspension support and coil spring.

SA0A3−05

DISPOSAL

1. FULLY EXTEND SHOCK ABSORBER ROD

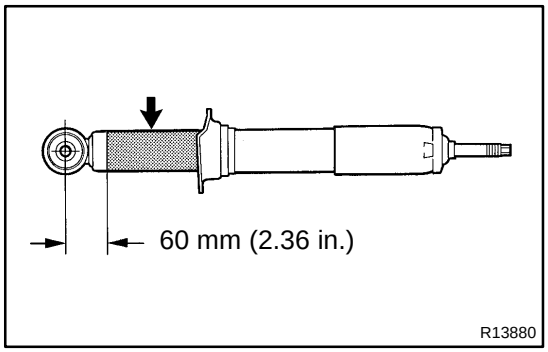

2. DRILL HOLE TO DISCHARGE GAS FROM CYLINDER

Using a drill, make a hole in the cylinder as shown in the illustration to discharge the gas inside.

CAUTION:

The discharged gas is harmless, but be careful of chips which may fly out when drilling.

SA0A2−04

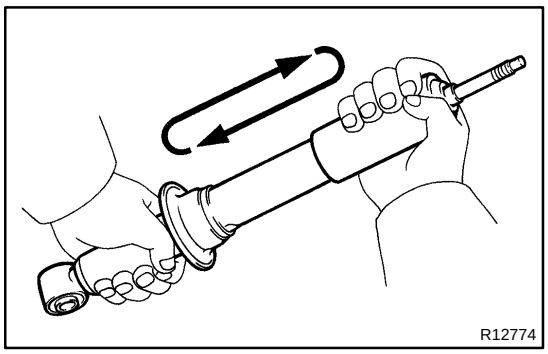

INSPECTION

INSPECT SHOCK ABSORBER

Compress and extend the shock absorber rod and check that there is no abnormal resistance or unusual operation sounds. If there is any abnormality, replace the shock absorber with a new one.

NOTICE:

When discarding the shock absorber, see DISPOSAL on page SA−66.

SA0A6−04

INSTALLATION

1. INSTALL SHOCK ABSORBER WITH COIL SPRING

(a) Install the upper side of the shock absorber to the chassis frame with the 3 nuts.
Torque: 64 N·m (650 kgf·cm, 47 ft·lbf)

(b) Connect the lower side of the shock absorber to the lower suspension arm with the bolt, washer and nut.
Torque: 135 N·m (1,400 kgf·cm, 100 ft·lbf)

2. INSTALL FRONT WHEEL
Torque: 110 N·m (1,150 kgf·cm, 83 ft·lbf)

SA0A5−06

REASSEMBLY

1. INSTALL COIL SPRING TO SHOCK ABSORBER

(a) Using SST, compress the coil spring.
SST 09727−30021 (09727−00010, 09727−00021, 09727−00031)

NOTICE:

- **Do not compress the coil spring more than necessary.**
- **Do not use an impact wrench. It will damage the SST.**

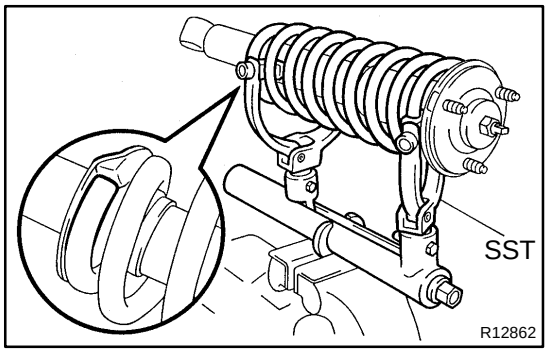

(b) Install the coil spring to the shock absorber.

HINT:

Fit the lower end of the coil spring into the gap of the spring seat of the shock absorber.

2. INSTALL SUSPENSION SUPPORT

(a) Install the cushion, 2 retainers and suspension support to the piston rod.

(b) Temporarily tighten a new suspension support center nut.

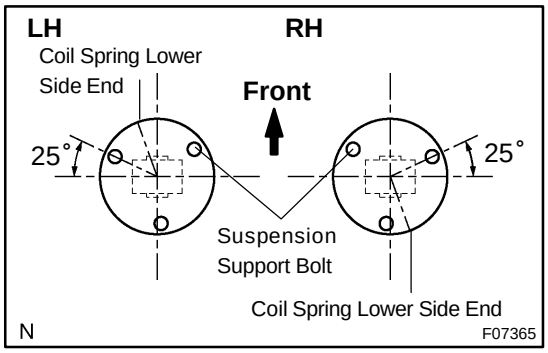

(c) Position the suspension support as shown in the illustration.

(d) Remove the SST.
SST 09727−30021 (09727−00010, 09727−00021, 09727−00031)

NOTICE:

Do not place yourself over the top of the shock absorber.

HINT:

After removing the SST, recheck the direction of the suspension support.

(e) Torque the suspension center nut.
Torque: 25 N·m (250 kgf·cm, 18 ft·lbf)

SA0A0−05

REMOVAL

1. REMOVE FRONT WHEEL

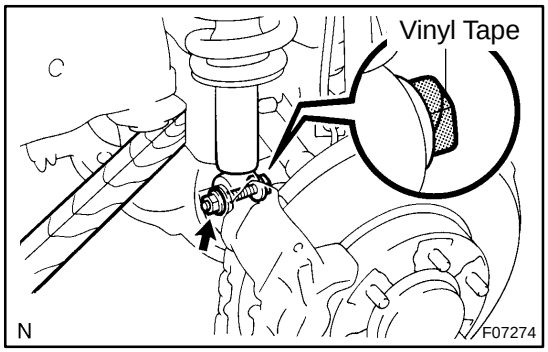

2. DISCONNECT SHOCK ABSORBER FROM LOWER SUSPENSION ARM

(a) Remove the shock absorber lower side set nut and washer.

NOTICE:

Do not remove the bolt.

(b) Wrap the bolt's head with vinyl tape to prevent the drive shaft boot from being damaged.

(c) Pry down the lower suspension arm to remove the bolt and disconnect the shock absorber.

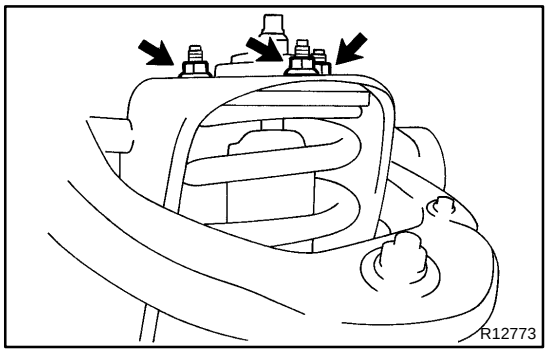

3. REMOVE SHOCK ABSORBER WITH COIL SPRING

Remove the 3 nuts and shock absorber with the coil spring.

FRONT STABILIZER BAR

COMPONENTS

SA0B4−08

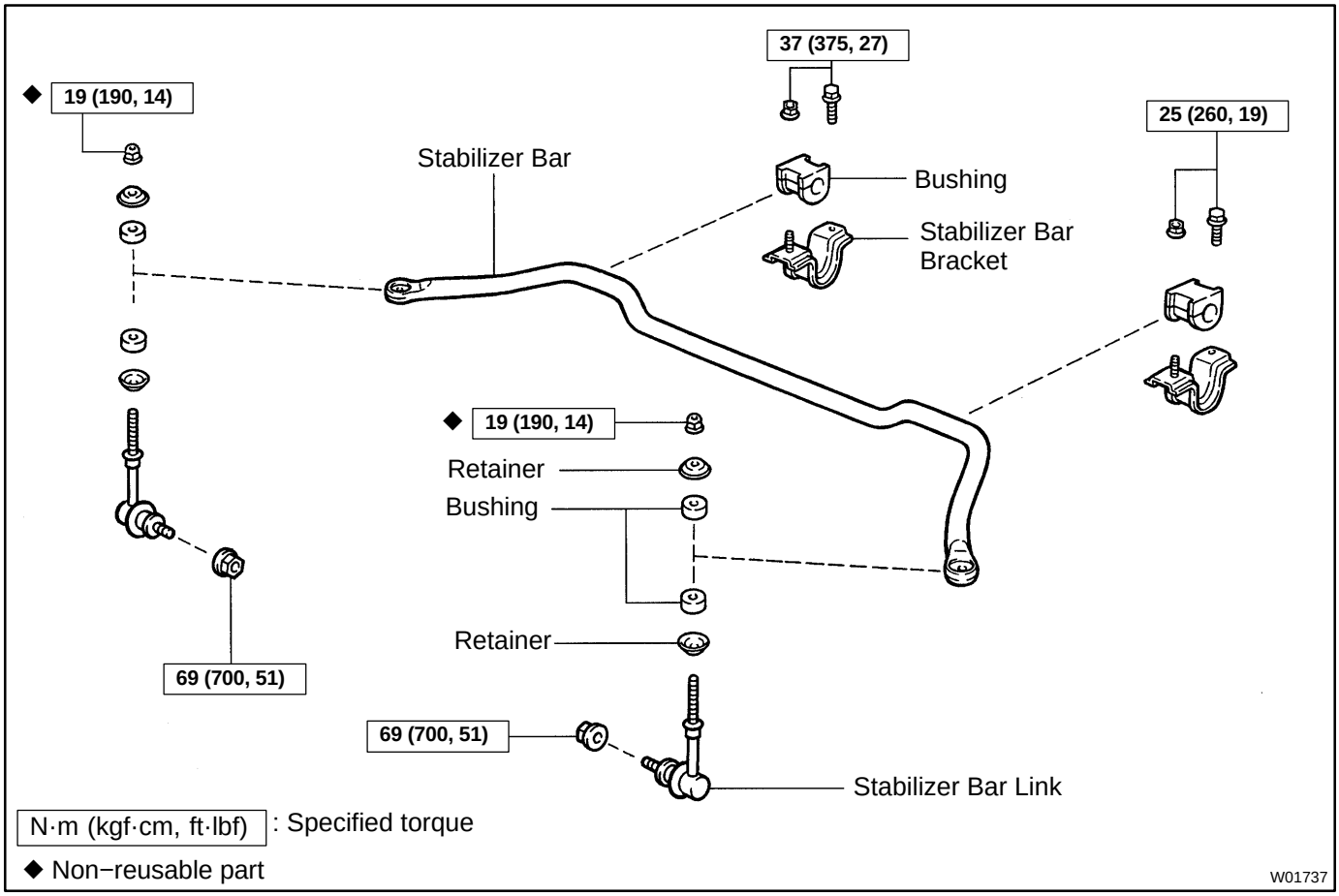

SA0B6−04

INSPECTION

1. INSPECT STABILIZER BAR LINK BALL JOINT BOOT FOR DAMAGE

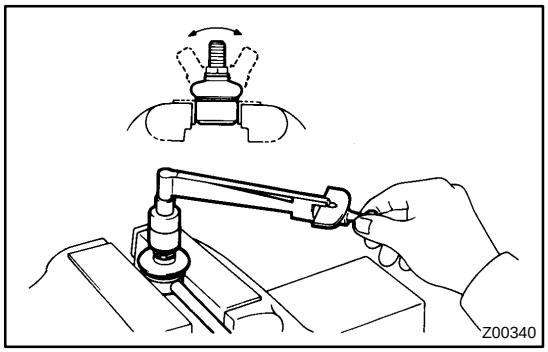

2. INSPECT STABILIZER BAR LINK BALL JOINT FOR ROTATION CONDITION

(a) As shown in the illustration, flip the ball joint stud back and forth 5 times before installing the nut.

(b) Using a torque wrench, turn the nut continuously 1 turn per 2 − 4 seconds and take the torque reading on the 5th turn.

Turning torque:
0.05 − 2.0 N·m (0.5 − 20 kgf·cm, 0.4 − 17 in.·lbf)

SA1KA−03

INSTALLATION

1. INSTALL STABILIZER BAR LINKS

(a) Install the 2 bushings, retainers and stabilizer bar link to the stabilizer bar.

(b) Hold the stabilizer bar link, and install the nut.
Torque: 19 N·m (190 kgf·cm, 14 ft·lbf)

(c) Use the same procedures described above to the other side.

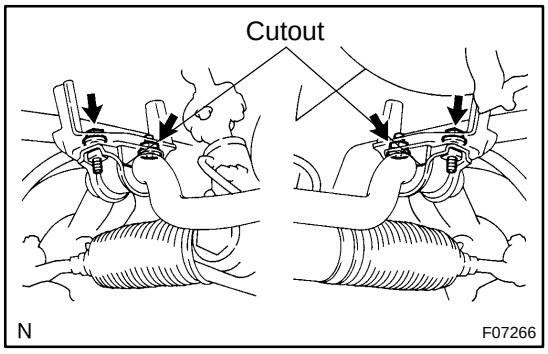

2. INSTALL STABILIZER BAR

(a) Install the 2 bushings with their cutouts facing to the rearward to the stabilizer bar.

(b) Install the stabilizer bar and 2 brackets with the nut and bolts.
Torque: 37 N·m (375 kgf·cm, 27 ft·lbf)

3. CONNECT STABILIZER BAR LINKS TO LOWER SUSPENSION ARM
Torque: 69 N·m (700 kgf·cm, 51 ft·lbf)

HINT:
If the ball joint turns together with the nut, use a hexagon (6 mm) wrench to hold the nut.

SA0B5−04

REMOVAL

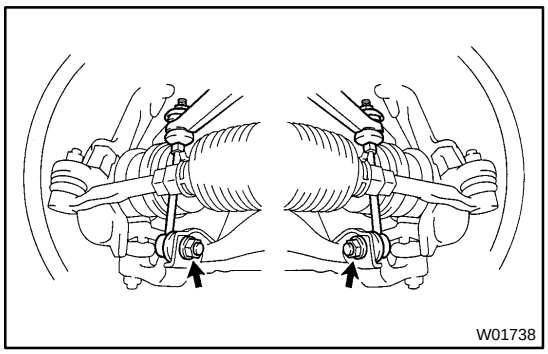

1. DISCONNECT STABILIZER BAR LINKS

Remove the 2 nuts and disconnect the stabilizer bar links from the lower suspension arms.

HINT:

If the ball joint turns together with the nut, use a hexagon (6 mm) wrench to hold the stud.

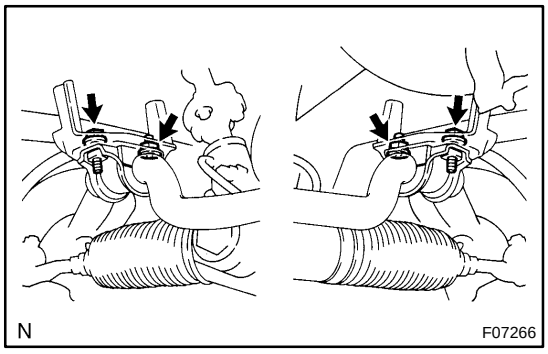

2. REMOVE STABILIZER BAR

(a) Remove the 2 bolts, nuts and stabilizer bar with the cushions and brackets.

(b) Remove the 2 brackets and cushions from the stabilizer bar.

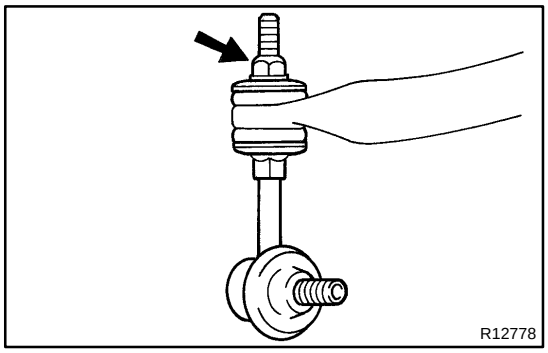

3. REMOVE STABILIZER BAR LINKS

(a) Hold the stabilizer bar link, and remove the nut.

(b) Remove the stabilizer bar link, 2 retainers and bushings from the stabilizer bar.

(c) Use the same procedures described above to the other side.

FRONT UPPER BALL JOINT

SA1K7−03

COMPONENTS

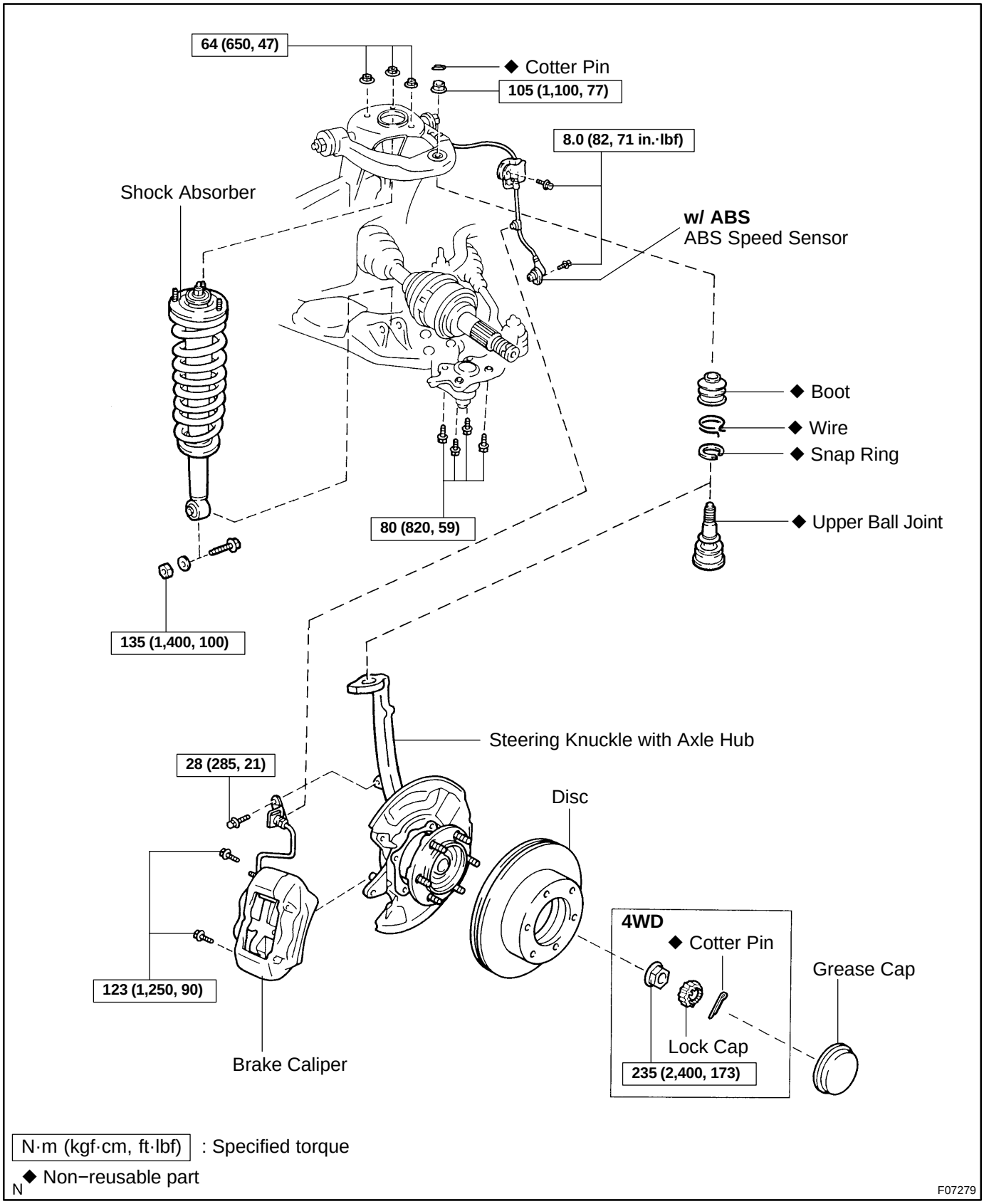

SA0AO−04

INSPECTION

1. INSPECT UPPER BALL JOINT BOOT FOR DAMAGE

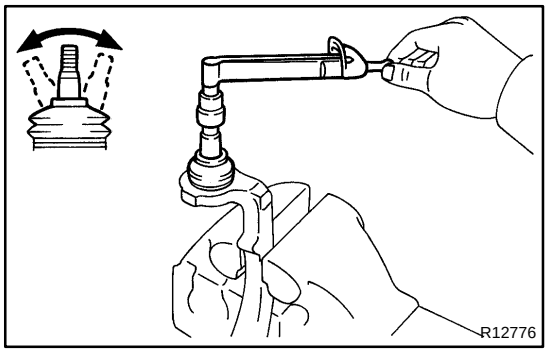

2. INSPECT UPPER BALL JOINT FOR ROTATION CONDITION

(a) As shown in the illustration, flip the ball joint stud back and forth 5 times before installing the nut.

(b) Using a torque wrench, turn the nut continuously 1 turn per 2 − 4 seconds and take the torque reading on the 5th turn.

Turning torque:
0.7 − 4.4 N·m (7 − 45 kgf·cm, 6 − 39 in.·lbf)

SA1K9−02

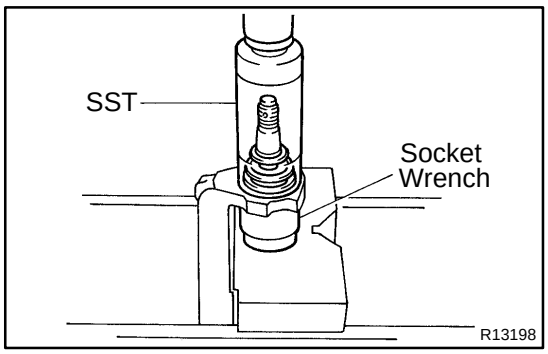

INSTALLATION

1. INSTALL UPPER BALL JOINT

(a) Using SST and a socket wrench, install a new ball joint.
SST 09309−37010

(b) Using a snap ring expander, install a new snap ring.

(c) Install a new boot and fix it with a new wire.

HINT:

Use the grease supplied in the kit.

2. INSTALL STEERING KNUCKLE WITH AXLE HUB
(See page SA−26)

SA1K8−02

REMOVAL

1. REMOVE STEERING KNUCKLE WITH AXLE HUB
(See page SA−20)

2. REMOVE UPPER BALL JOINT

(a) Remove the wire and boot.

(b) Using a snap ring expander, remove the snap ring.

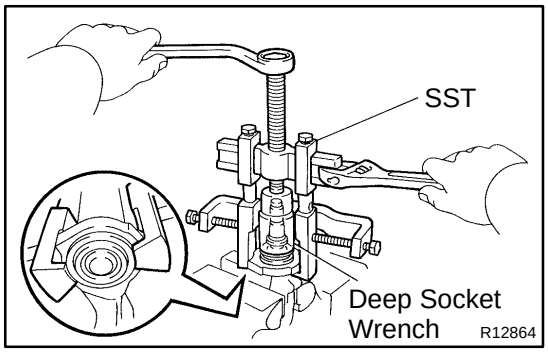

(c) Using SST and a deep socket wrench, remove the upper ball joint.

SST 09950−40011 (09951−04010, 09952−04010, 09953−04020, 09954−04010, 09955−04031, 09957−04010, 09958−04011)

FRONT UPPER SUSPENSION ARM

SA0AC−08

COMPONENTS

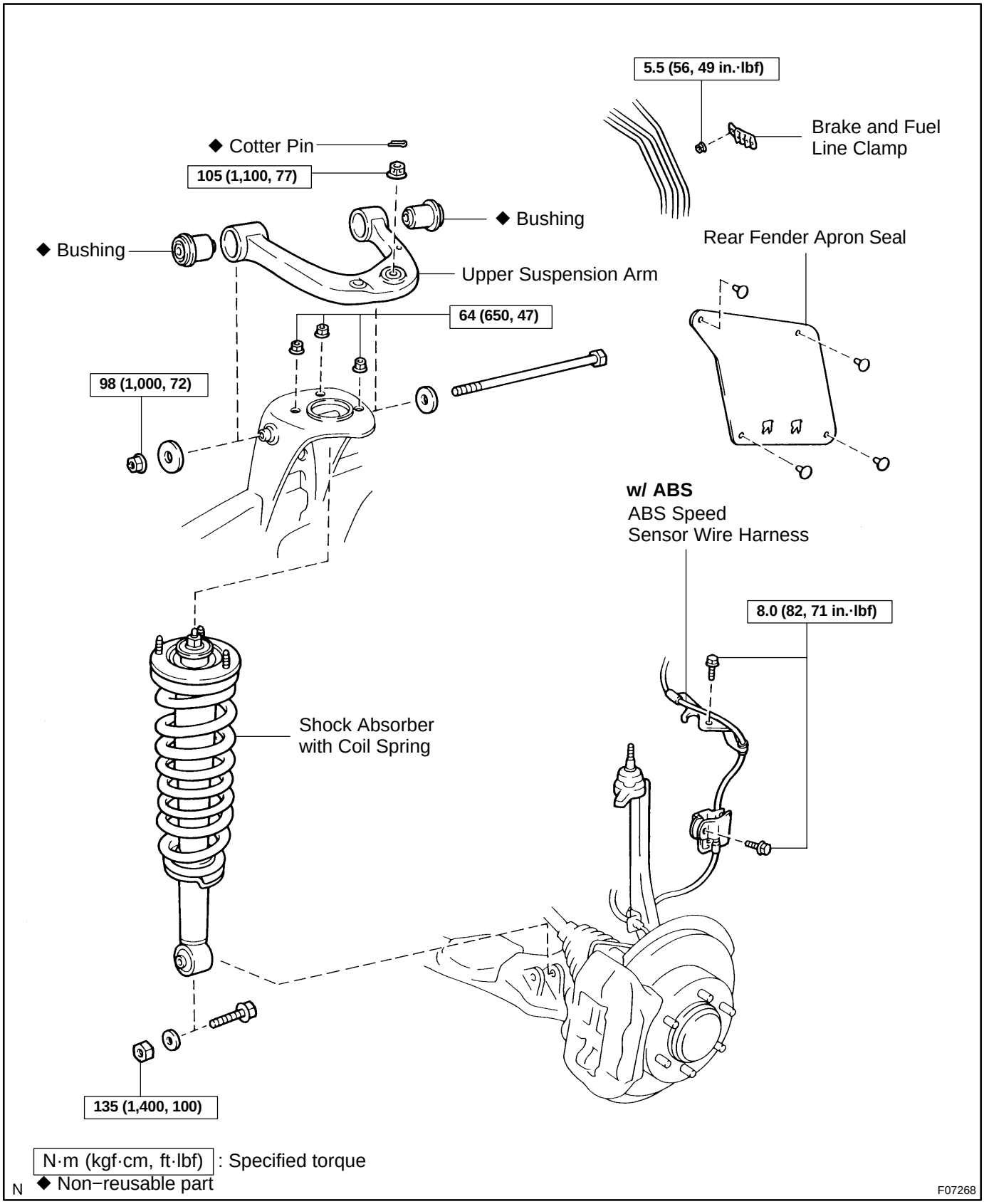

SA0AE−05

INSTALLATION

1. INSTALL UPPER SUSPENSION ARM

Install the upper suspension arm with the 2 washers, bolt and nut.

Torque: 98 N·m (1,000 kgf·cm, 72 ft·lbf)

HINT:

After stabilizing the suspension, torque the nut.

2. INSTALL BRAKE AND FUEL LINE CLAMP

Torque: 5.5 N·m (56 kgf·cm, 49 in.·lbf)

3. INSTALL REAR FENDER APRON SEAL

4. CONNECT UPPER BALL JOINT

(a) Connect the upper ball joint to the upper suspension arm.

(b) Install the nut and a new cotter pin.

If the holes for the cotter pin are not aligned, tighten the nut further up to 60°.

Torque: 105 N·m (1,100 kgf·cm, 77 ft·lbf)

5. w/ ABS:

CONNECT ABS SPEED SENSOR WIRE HARNESS CLAMPS

Torque: 8.0 N·m (82 kgf·cm, 71 in.·lbf)

6. INSTALL SHOCK ABSORBER WITH COIL SPRING (See page SA−68)

7. CHECK FRONT WHEEL ALIGNMENT (See page SA−5)

SA1K6−03

REMOVAL

1. REMOVE SHOCK ABSORBER WITH COIL SPRING
(See page SA−63)

2. w/ ABS:
DISCONNECT ABS SPEED SENSOR WIRE HARNESS CLAMPS

Remove the 2 bolts and ABS speed sensor wire harness clamps from the steering knuckle and upper suspension arm.

3. DISCONNECT UPPER BALL JOINT

(a) Remove the cotter pin and loosen the nut.

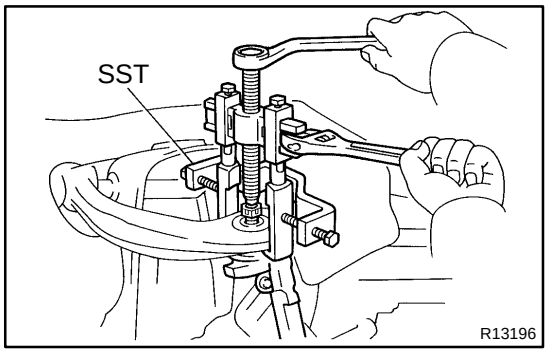

(b) Using SST, disconnect the upper ball joint.
SST 09950−40011 (09951−04010, 09952−04010, 09953−04020, 09954−04010, 09955−04031, 09958−04011)

(c) Support the steering knuckle securely.

(d) Remove the nut.

4. REMOVE REAR FENDER APRON SEAL

Remove the 4 clips and rear fender apron seal.

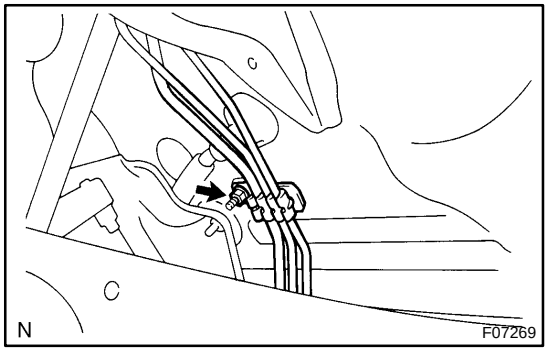

5. REMOVE BRAKE AND FUEL LINE CLAMP

Disengage the 2 brake lines and fuel line, and remove the nut and brake line clamp.

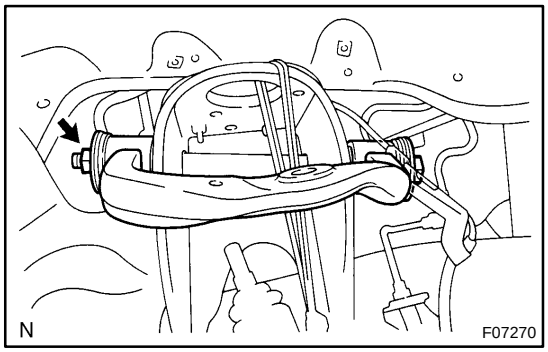

6. REMOVE UPPER SUSPENSION ARM

Remove the nut, bolt, 2 washers and upper suspension arm.

SA05Q−03

REPLACEMENT

1. REMOVE BUSHING

(a) Using a chisel and hammer, pry up the flange of the bushing.

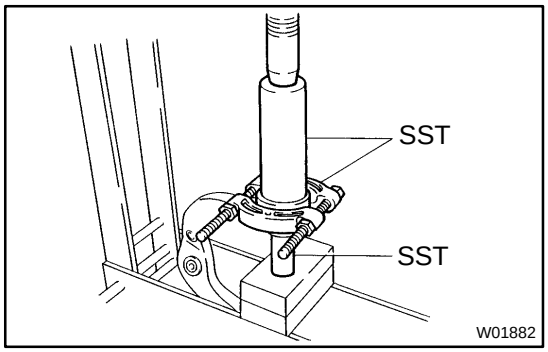

(b) Using SST and a press, remove the bushing.
SST 09613−26010, 09631−20060, 09950−00020

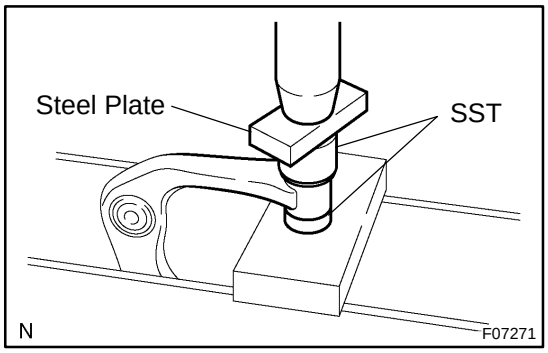

2. INSTALL NEW BUSHING

Using SST, a press and steel plate, install a new bushing.
SST 09631−12090, 09710−30021 (09710−03051)

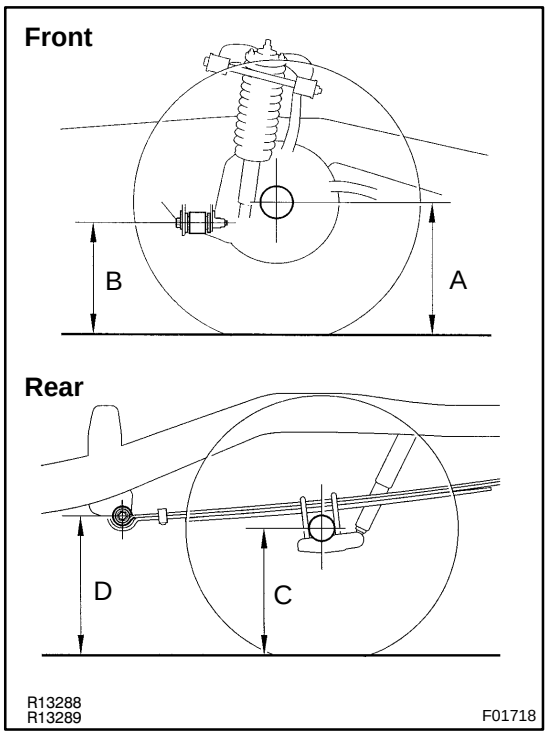

FRONT WHEEL ALIGNMENT

SA1FZ−06

INSPECTION

1. MEASURE VEHICLE HEIGHT (See page SS−59)

Measuring points:

A: Ground clearance of the front drive shaft center

B: Ground clearance of the front adjusting cam bolt center

C: Ground clearance of the rear axle shaft center

D: Ground clearance of the leaf spring front side bushing center

Vehicle height:

Front: A − B

Rear: C − D

NOTICE:

Before inspecting the wheel alignment, adjust the vehicle height to the specified value.

If the vehicle height is not the specified value, try to adjust it by pushing down on or lifting the body.

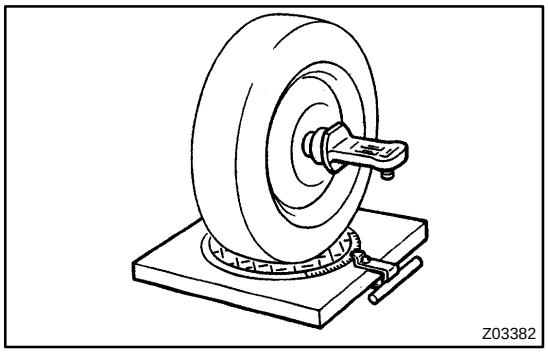

2. INSTALL CAMBER−CASTER−KINGPIN GAUGE OR POSITION VEHICLE ON WHEEL ALIGNMENT TESTER

Follow the specific instructions of the equipment manufacturer.

3. INSPECT CAMBER, CASTER AND STEERING AXIS INCLINATION (See page SS−59)

If the steering axis inclination is not within the specified value, after the camber and caster have been correctly adjusted, recheck the steering knuckle and front wheel for bearing or looseness.

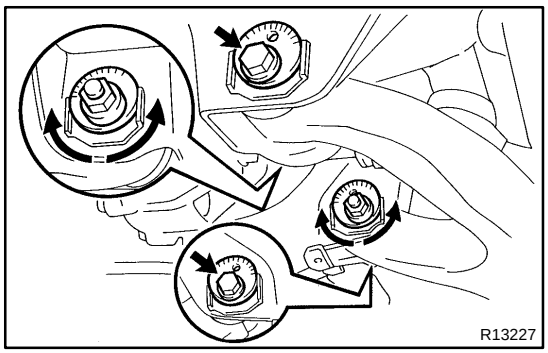

4. ADJUST CAMBER AND CASTER

(a) Loosen the front and/or rear adjusting cam set bolts.

(b) Adjust the camber and caster by front and/or rear adjusting cams (See adjustment chart).

HINT:

Try to adjust the camber and caster to the center of the specified values.

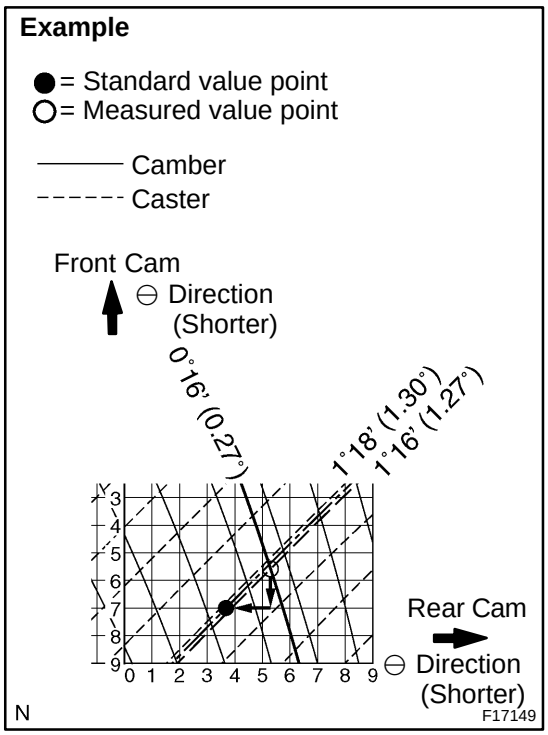

(c) How to read adjustment chart (Example).

(1) Find the applicable wheel alignment standard value for the particular model.

(2) Mark the selected standard value on the adjustment chart.

Example:

Camber: 0°16' (0.26°)

Caster: 1°17' (1.28°)

(3) Measure the present wheel alignment value with the vehicle in non−loaded condition.

(4) Mark the measured present value on the adjustment chart.

Example:

Camber: 0°50' (0.83°)

Caster: 1°18' (1.30°)

(5) As shown in the example chart, read the distance from the measured value to the standard value, and adjust the front and/or rear adjusting cams accordingly.

Amount to turn adjusting cams (by graduation):

Example:

Front cam: 1.4 ⊕ Direction

Rear cam: 1.5 ⊕ Direction

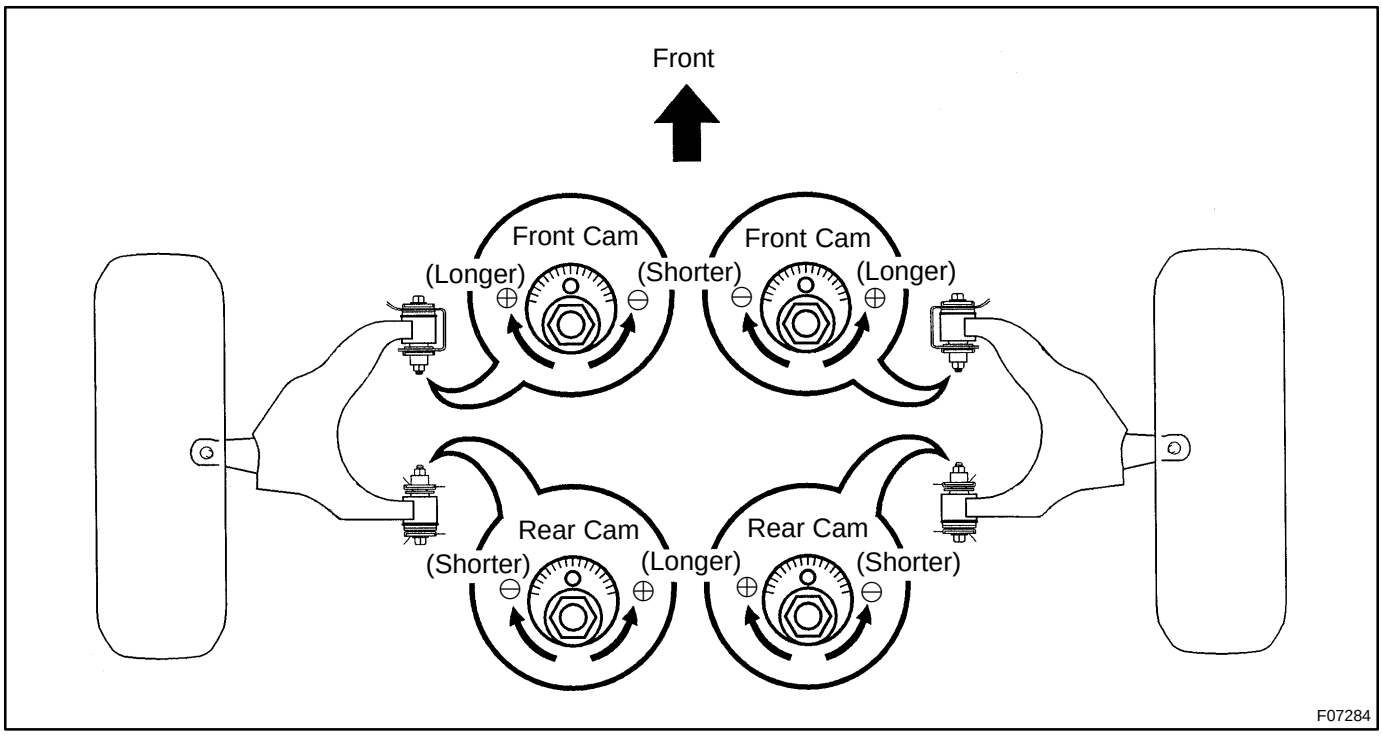

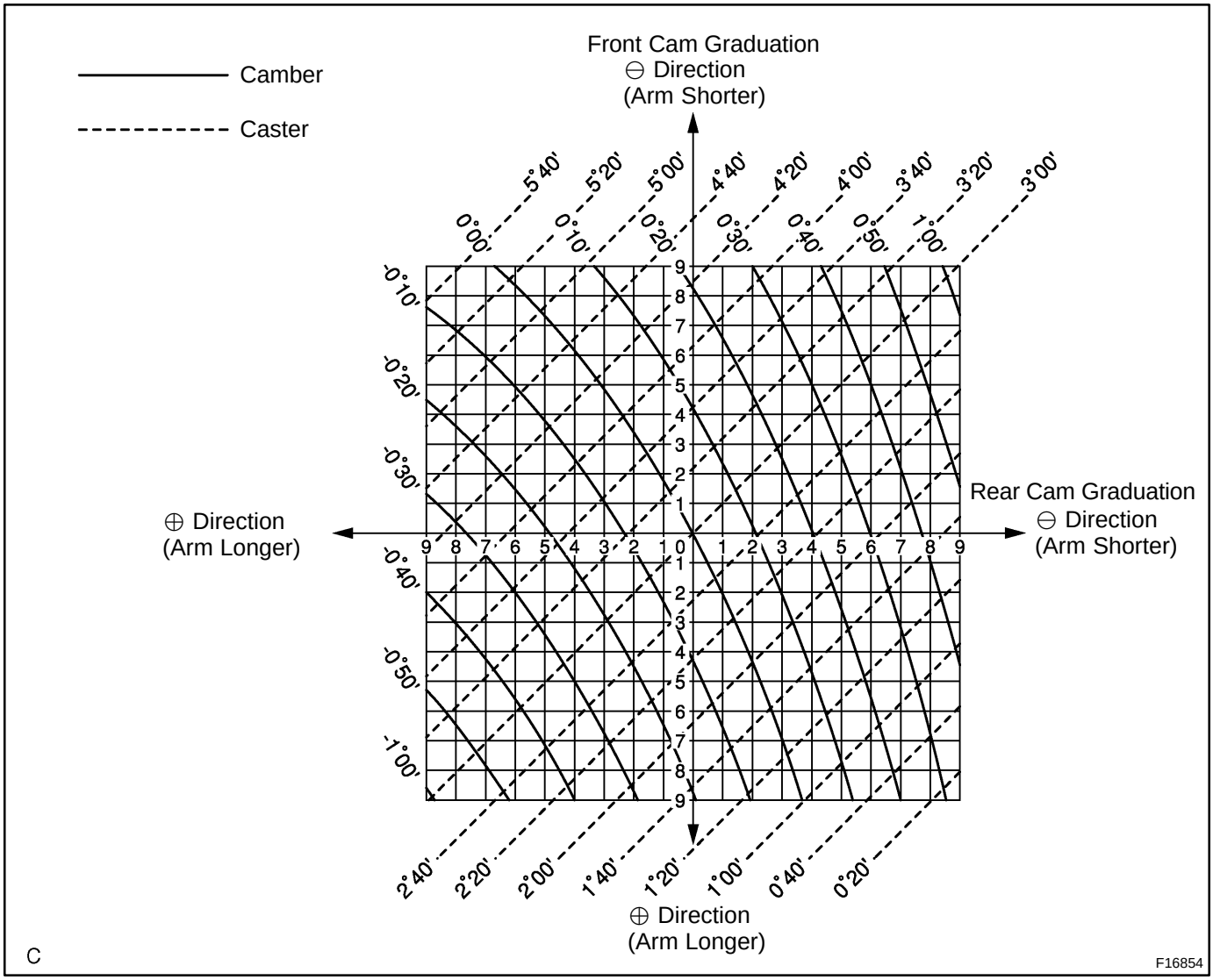

(d) Torque the front and/or rear adjusting cam set bolts.
Torque: 130 N·m (1,325 kgf·cm, 96 ft·lbf)

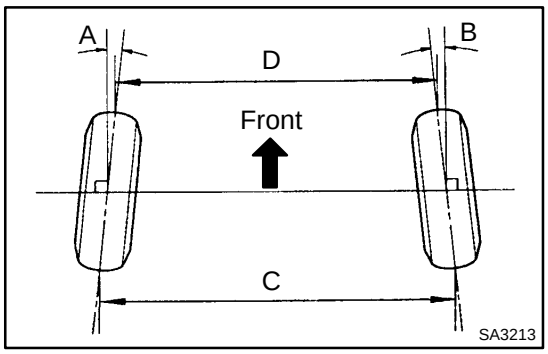

5. INSPECT TOE−IN (See page SS−59)

If the toe−in is not within the specified value, adjust the rack ends.

6. ADJUST TOE−IN AND WHEEL ANGLE

(a) Remove the 2 clips.

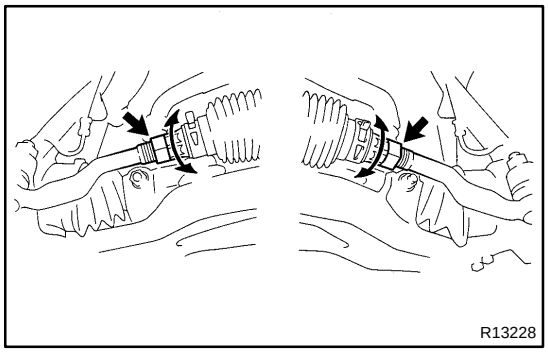

(b) Loosen the tie rod end lock nuts.

(c) Turn the right and left rack ends by an equal amount to adjust the toe−in.

HINT:

Try to adjust the toe−in to the center of the specified value.

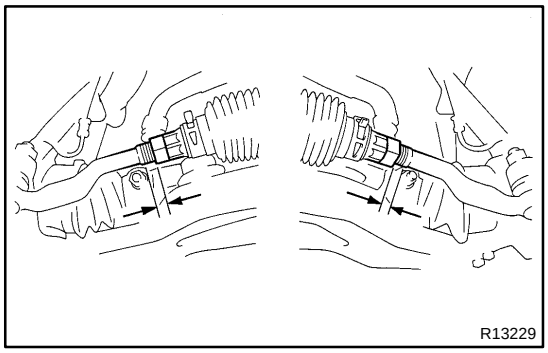

(d) Make sure that the lengths of the right and left rack ends are the same.

Rack end length difference: 1.5 mm (0.059 in.) or less

(e) Tighten the tie rod end lock nuts.

Torque: 55 N·m (560 kgf·cm, 41 ft·lbf)

(f) Place the boots on the seats and install the clips.

HINT:

Make sure that the boots are not twisted.

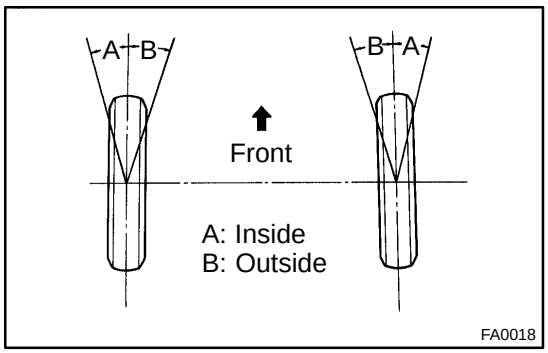

(g) Inspect the wheel angle See page SS−59.

Turn the steering wheel fully and measure the turning angle.

Wheel turning angle:

If the right and left wheel turning angles differ from the specified value, readjust the toe−in and wheel angle within the specified value. At this time, make sure that the lengths of the right and left rack ends are the same.

Rack end length difference: 1.5 mm (0.059 in.) or less

FRONT WHEEL HUB BOLT

SA1K2−02

REPLACEMENT

1. REMOVE FRONT WHEEL

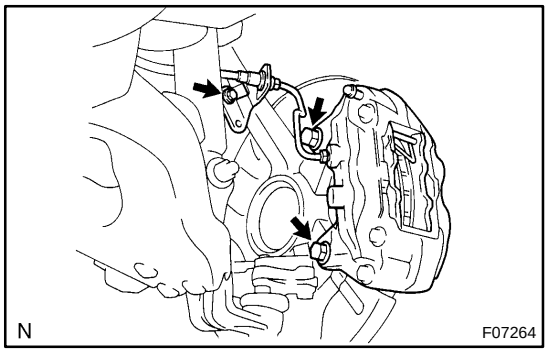

2. REMOVE BRAKE CALIPER AND DISC

(a) Remove the bolt and brake line clamp from the steering knuckle.

(b) Remove the 2 bolts, brake caliper and disc.

(c) Support the brake caliper securely.

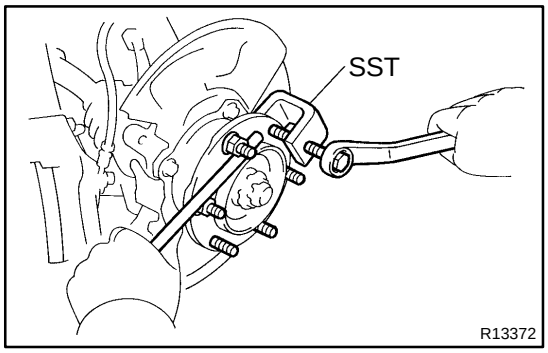

3. REMOVE HUB BOLT

Using SST and a screwdriver or an equivalent, remove the hub bolt.

SST 09650−17011

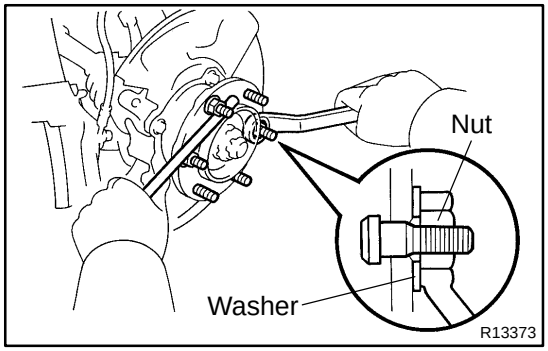

4. INSTALL HUB BOLT

(a) Install a washer and nut to a new hub bolt as shown in the illustration.

(b) Using a screwdriver or an equivalent to hold, install the hub bolt by torquing the nut.

(c) Remove the nut and washer.

5. INSTALL BRAKE DISC AND CALIPER

(a) Install the brake disc, caliper and 2 bolts.

Torque: 123 N·m (1,250 kgf·cm, 90 ft·lbf)

(b) Install the brake line clamp to the steering knuckle with the bolt.

Torque: 28 N·m (285 kgf·cm, 21 ft·lbf)

6. INSTALL FRONT WHEEL

Torque: 110 N·m (1,150 kgf·cm, 83 ft·lbf)

7. DEPRESS BRAKE PEDAL SEVERAL TIMES

REAR AXLE SHAFT

COMPONENTS

SA1KB−03

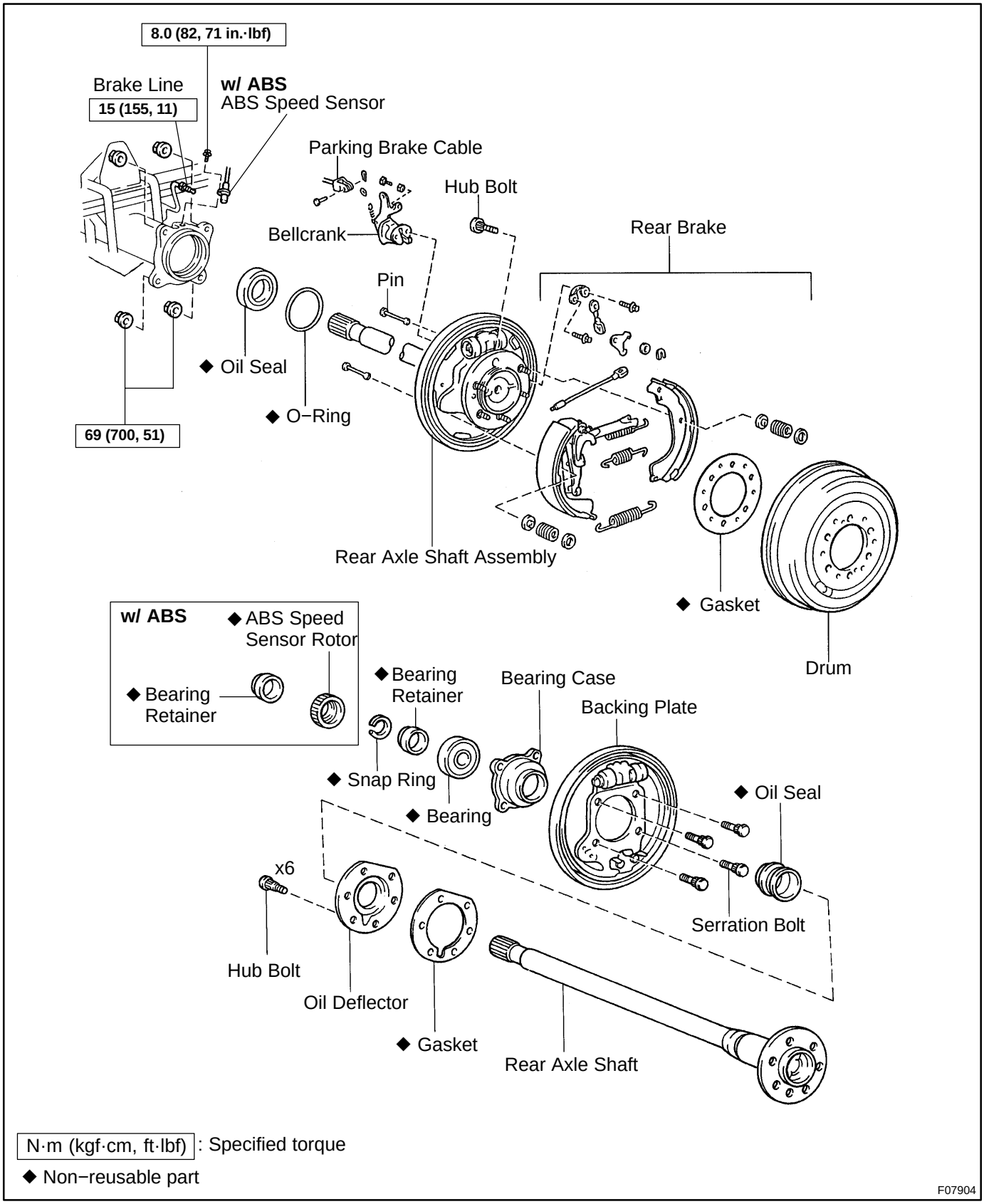

N·m (kgf·cm, ft·lbf) : Specified torque

◆ Non−reusable part

F07904

SA1GB−05

INSPECTION

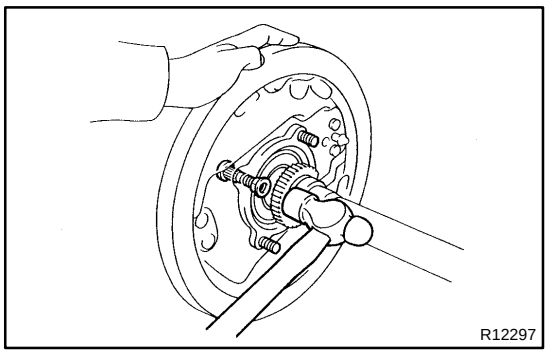

1. w/ ABS:

REMOVE BEARING RETAINER (DIFFERENTIAL SIDE) AND ABS SPEED SENSOR ROTOR

(a) Attach the 4 nuts to the serration bolts, and using a hammer, remove the serration bolts from the backing plate.

NOTICE:

At the time of installation, do not reuse the nuts.

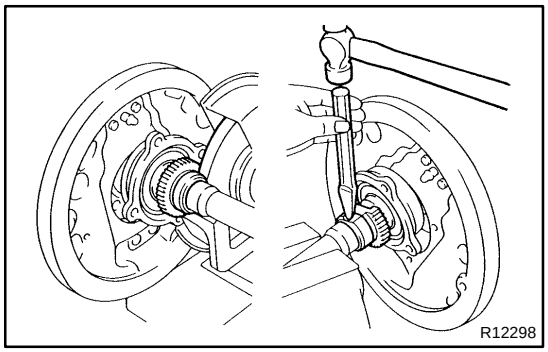

(b) Grind the retainer and sensor rotor surfaces, then chisel them out.

(c) Attach the washers and nuts to the serration bolts, then torque the nuts to install the serration bolts to the backing plate.

(d) Remove the 4 nuts and washers from the serration bolts.

2. REMOVE SNAP RING FROM AXLE SHAFT

Using a snap ring expander, remove the snap ring.

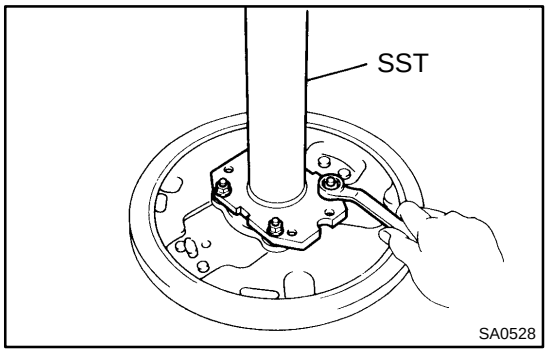

3. REMOVE REAR AXLE SHAFT FROM BACKING PLATE

(a) Position SST on the backing plate with the 4 nuts.
SST 09521−25011, 09521−25022

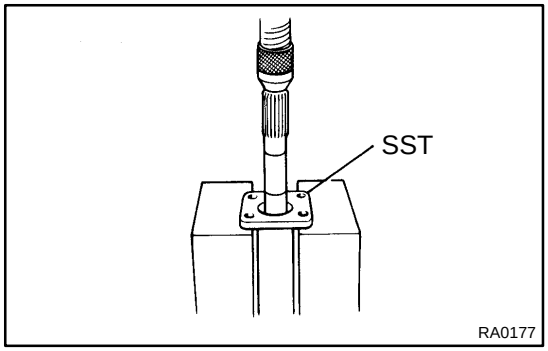

(b) Using a press, remove the rear axle shaft and bearing retainer from the backing plate.

(c) Remove the SST.
SST 09521−25011, 09521−25022

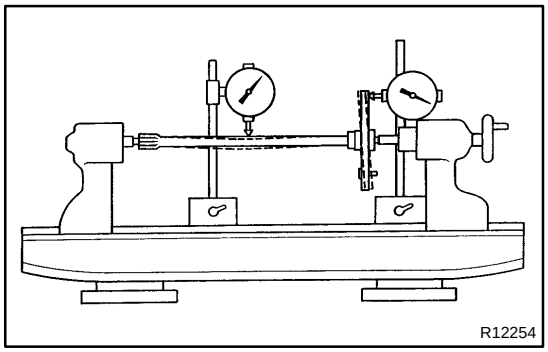

4. INSPECT AXLE SHAFT

Using a dial indicator, measure the runout of the shaft and flange.

Maximum shaft runout: 2.0 mm (0.079 in.)

Maximum flange runout: 0.1 mm (0.004 in.)

If the rear axle shaft or flange are damaged or worn, or if runout is greater than the maximum, replace the rear axle shaft.

5. INSPECT OIL SEAL (OUTER SIDE)

(a) Check for damage.

(b) Check the oil seal lip for wear or damage.

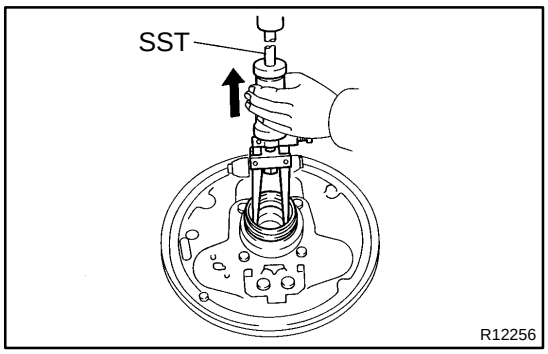

6. REMOVE OIL SEAL (OUTER SIDE)

Using SST, remove the oil seal.

SST 09308−00010

7. INSPECT REAR AXLE BEARING

Check for wear or damage.

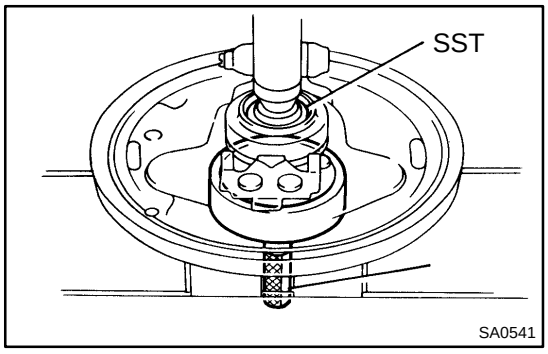

8. REPLACE REAR AXLE BEARING

(a) Using SST and a press, remove the bearing.

SST 09223−56010, 09950−60010 (09951−00560)

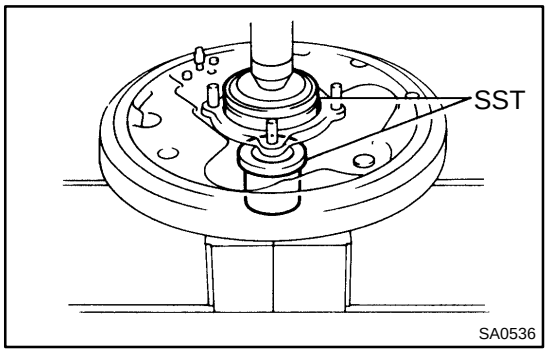

(b) Using SST and a press, install a new bearing.

SST 09515−30010, 09950−60020 (09951−00890)

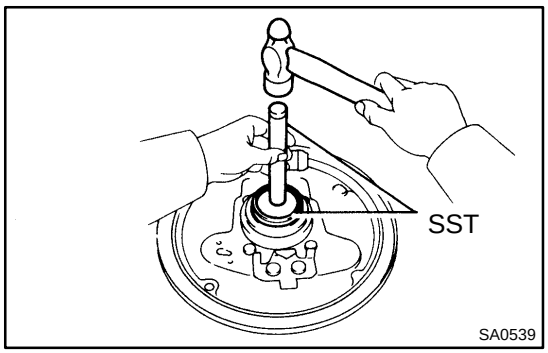

9. INSTALL NEW OIL SEAL (OUTER SIDE)

Using SST and a hammer, install a new oil seal.

SST 09950−60010 (09951−00610),
09950−70010 (09951−07150)

10. INSPECT BEARING CASE

Check for wear or damage.

11. REPLACE BEARING CASE

(a) Remove the outer side oil seal (See step 5.).

(b) Remove the bearing (See step 6.).

(c) Remove the serration bolts (See step 1.).

(d) Remove the bearing case.

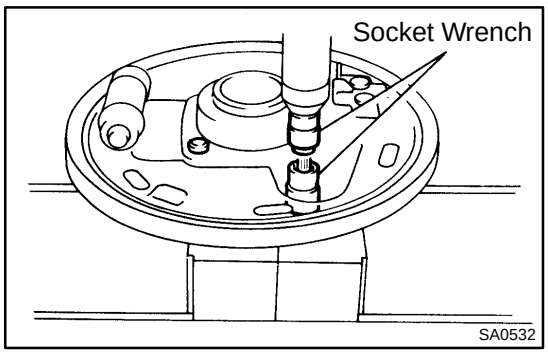

(e) Position the backing plate on a new bearing case and using 2 socket wrenches and a press, install the serration bolts.
(f) Install a new bearing (See step 6.).
(g) Install a new outer side oil seal (See step 7.).

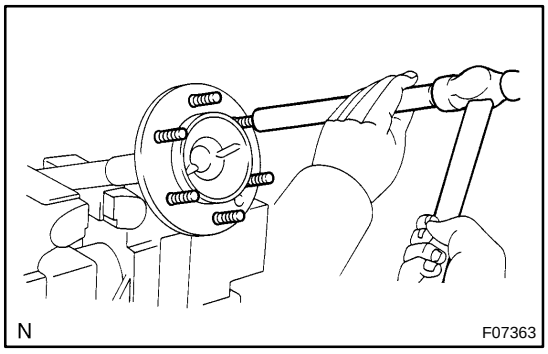

12. REPLACE OIL DEFLECTOR
(a) Using a brass bar and hammer, remove the hub bolts, oil deflector and gasket.
(b) Position a new gasket and oil deflector on the axle shaft and install a washer and nut to the hub bolt and install the hub bolt by torquing the nut.
(c) Remove the nut and washer.

13. INSTALL REAR AXLE SHAFT IN BACKING PLATE
(a) Coat the new outer side oil seal lip with MP grease.

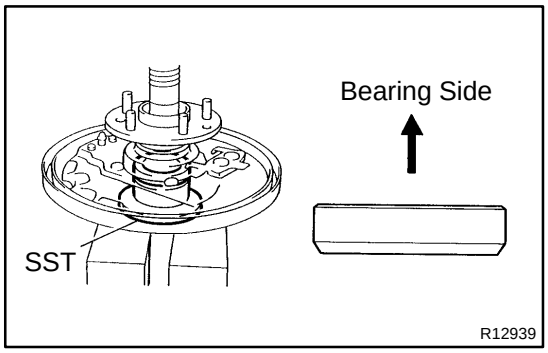

(b) Install the backing plate and bearing retainer on the rear axle shaft.
(c) Using SST and a press, install the rear axle shaft into the backing plate.
SST 09316−60011 (09316−00051)
(d) Using a snap ring expander, install a new snap ring.

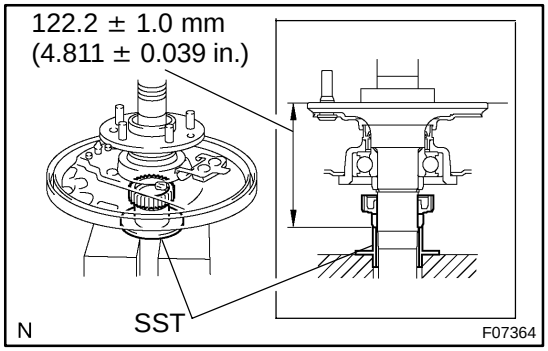

14. w/ ABS:
INSTALL ABS SPEED SENSOR ROTOR AND BEARING RETAINER (DIFFERENTIAL SIDE)

Using SST and a press, install a new sensor rotor and new bearing retainer to the axle shaft.
SST 09316−60011 (09316−00051)
Standard length: 122.2 ± 1.0 mm (4.811 ± 0.039 in.)

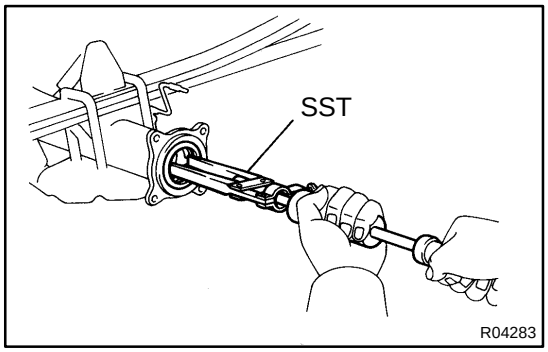

15. REPLACE OIL SEAL (INNER SIDE)
(a) Using SST, remove the oil seal.
SST 09308−00010

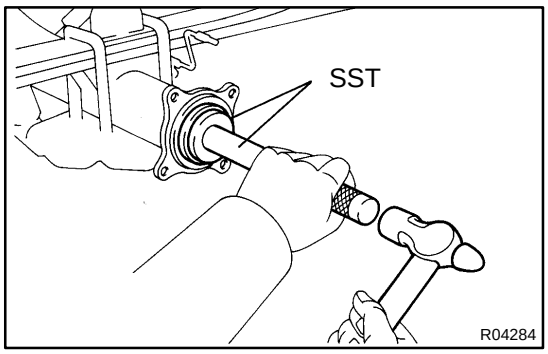

(b) Using SST and a hammer, install a new oil seal.
SST 09950−60020 (09951−00710),
09950−70010 (09951−07150)

(c) Coat a new oil seal lip with MP grease.

SA1KC−03

INSTALLATION

1. **INSTALL NEW O−RING TO REAR AXLE HOUSING**
2. **INSTALL REAR AXLE SHAFT ASSEMBLY**
   Torque: 69 N·m (700 kgf·cm, 51 ft·lbf)
3. **CONNECT BRAKE LINE AND PARKING BRAKE CABLE**

(a) Connect the parking brake cable with the pin and clip.

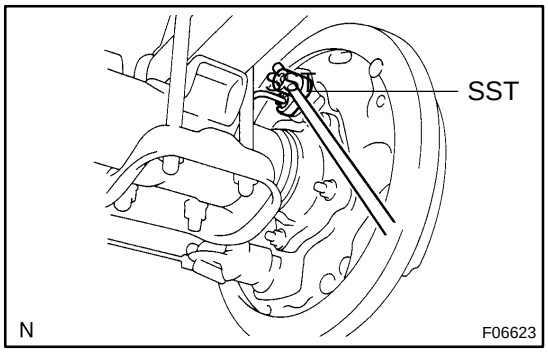

(b) Using SST, connect the brake line to the wheel cylinder.
SST 09023−00101
Torque: 15 N·m (155 kgf·cm, 11 ft·lbf)

4. **INSTALL REAR BRAKE ASSEMBLY (See page BR−52)**
5. **w/ ABS:**
   INSTALL ABS SPEED SENSOR
   Torque: 8.0 N·m (82 kgf·cm, 71 ft·lbf)
6. **CHECK BEARING BACKLASH AND AXLE SHAFT DEVIATION (See page SA−93)**
7. **INSTALL NEW GASKET AND BRAKE DRUM**
8. **INSTALL REAR WHEEL**
   Torque: 110 N·m (1,150 kgf·cm, 83 ft·lbf)
9. **BLEED BRAKE SYSTEM (See page BR−4)**
10. **w/ ABS:**
    CHECK ABS SPEED SENSOR SIGNAL (See page DI−1387 or DI−1478)

SA0B9−07

REMOVAL

1. REMOVE REAR WHEEL

2. REMOVE BRAKE DRUM AND GASKET

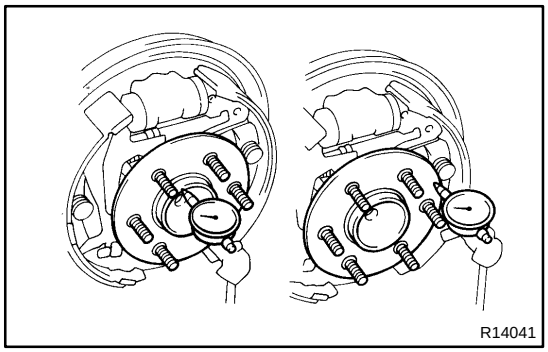

3. CHECK BEARING BACKLASH AND AXLE SHAFT DEVIATION

(a) Using a dial indicator, check the backlash in the bearing shaft direction.

Maximum: 0.7 mm (0.028 in.)

If the backlash exceeds the maximum, replace the bearing.

(b) Using a dial indicator, check the deviation at the surface of the axle shaft outside the hub bolt.

Maximum: 0.1 mm (0.004 in.)

If the deviation exceeds the maximum, replace the axle shaft.

4. w/ ABS:

REMOVE ABS SPEED SENSOR FROM REAR AXLE HOUSING

Remove the bolt and ABS speed sensor.

5. REMOVE REAR BRAKE ASSEMBLY (See page BR−48)

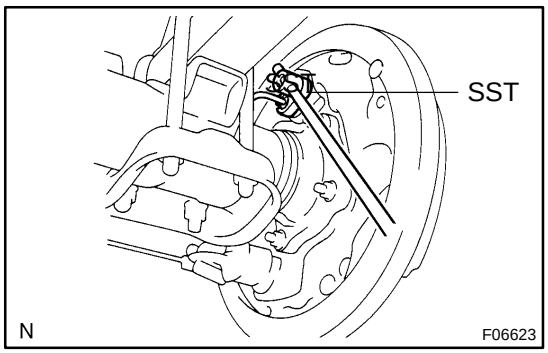

6. DISCONNECT BRAKE LINE AND PARKING BRAKE CABLE

(a) Using SST, disconnect the brake line from the wheel cylinder.

SST 09023−00101

(b) Remove the clip and pin, and disconnect the parking brake cable.

7. REMOVE REAR AXLE SHAFT ASSEMBLY

(a) Remove the 4 backing plate mounting nuts.

(b) Pull out the rear axle shaft assembly from the rear axle housing.

NOTICE:

Be careful not to damage the oil seal.

8. REMOVE O−RING FROM REAR AXLE HOUSING

REAR DIFFERENTIAL CARRIER

SA0BN−06

COMPONENTS

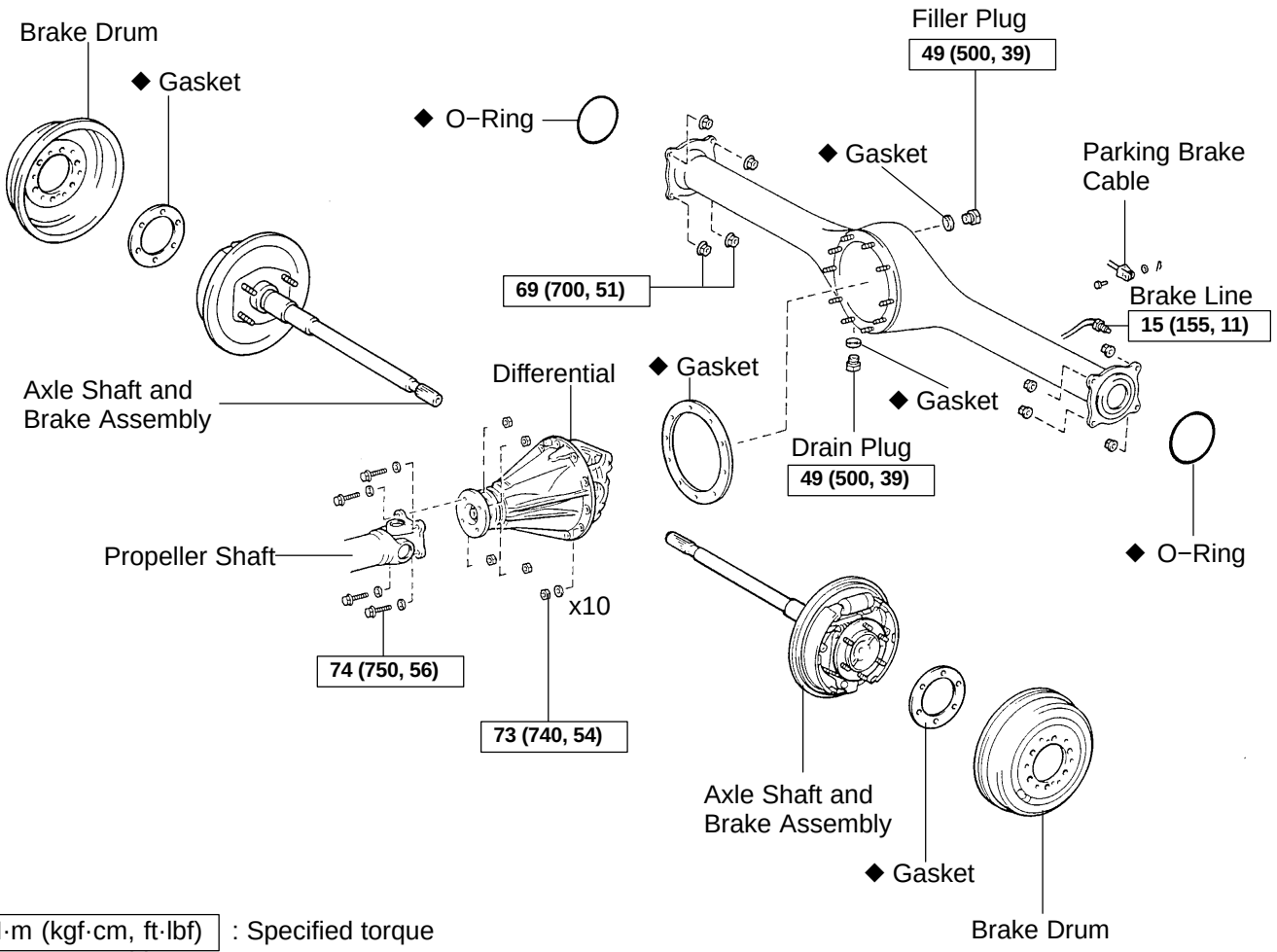

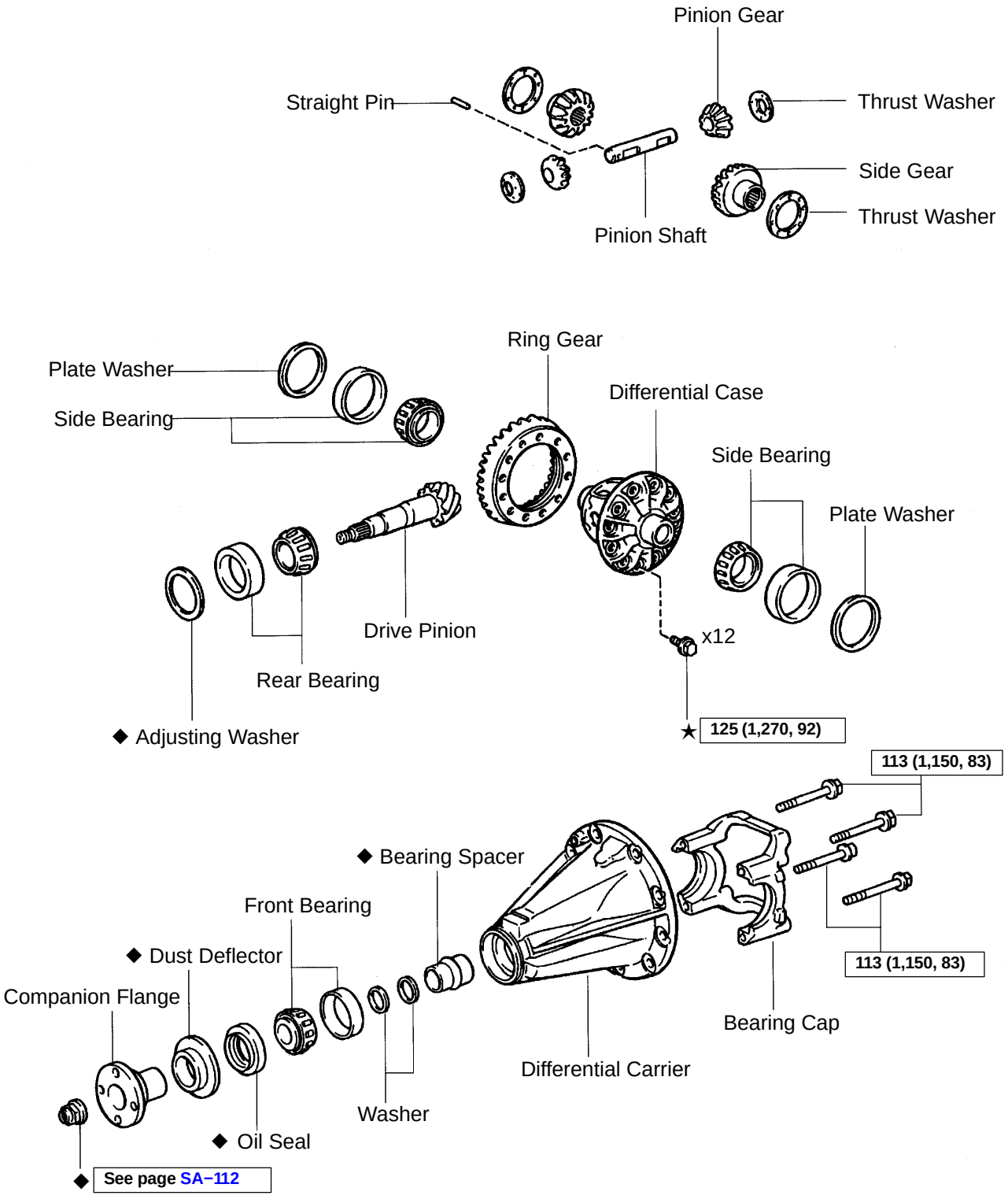

N·m (kgf·cm, ft·lbf) : Specified torque
◆ Non−reusable part
★ Precoated part

Z19299

SA0BP−10

DISASSEMBLY

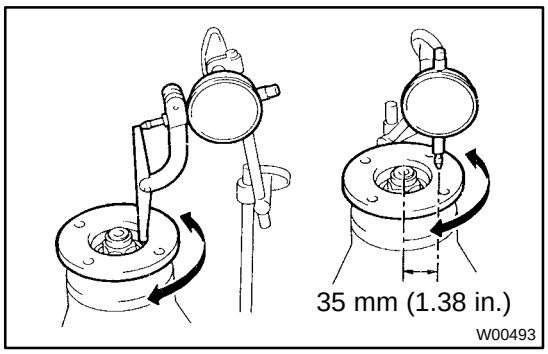

1. CHECK COMPANION FLANGE RUNOUT

Using a dial indicator, measure the vertical and lateral runout of the companion flange.

Maximum: runout: 0.09 mm (0.0035 in.)

If the runout exceeds the maximum, replace the companion flange.

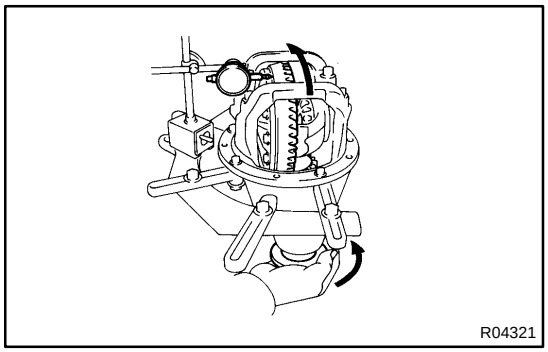

2. CHECK RING GEAR RUNOUT

Using a dial indicator, measure the ring gear runout.

Maximum runout: 0.05 mm (0.0020 in.)

If the runout exceeds the maximum, replace the ring gear.

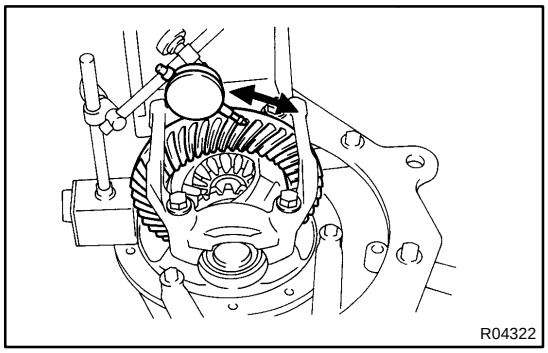

3. CHECK RING GEAR BACKLASH

Using a dial indicator, while holding the companion flange, measure the ring gear backlash.

Backlash: 0.13 − 0.18 mm (0.0051 − 0.0071 in.)

HINT:

Measure at 3 or more positions around the circumference of the ring gear.

If the backlash is not within the specified value, adjust the side bearing preload or repair as necessary.

4. CHECK TOOTH CONTACT BETWEEN RING GEAR AND DRIVE PINION (See page SA−112)

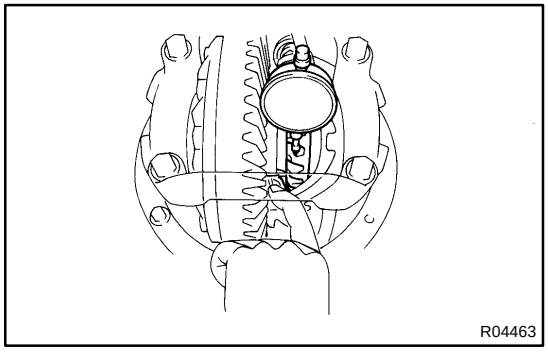

5. CHECK SIDE GEAR BACKLASH

Using a dial indicator, measure the side gear backlash while holding one pinion gear toward the case.

Backlash: 0.05 − 0.20 mm (0.0020 − 0.0079 in.)

If the backlash is not within the specified value, replace the side gear thrust washer with the different thickness (See page SA−112).

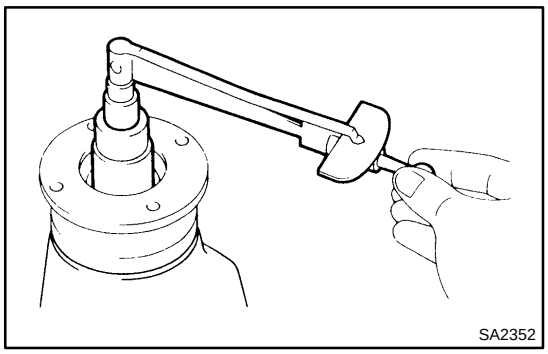

6. MEASURE DRIVE PINION PRELOAD

Using a torque wrench, measure the preload of the drive pinion using the backlash between the drive pinion and ring gear.

Preload (at starting):
0.5 − 0.8 N·m (5 − 8 kgf·cm, 4.3 − 6.9 in.·lbf)

7. CHECK TOTAL PRELOAD

Using a torque wrench, measure the total preload with the teeth of the drive pinion and ring gear in contact.

Total preload (at starting):
Drive pinion preload plus 0.4 − 0.6 N·m (4 − 6 kgf·cm, 3.5 − 5.2 in.·lbf)

If necessary, disassemble and inspect the differential.

8. REMOVE COMPANION FLANGE

(a) Using a chisel and hammer, unstake the staked part of the nut.

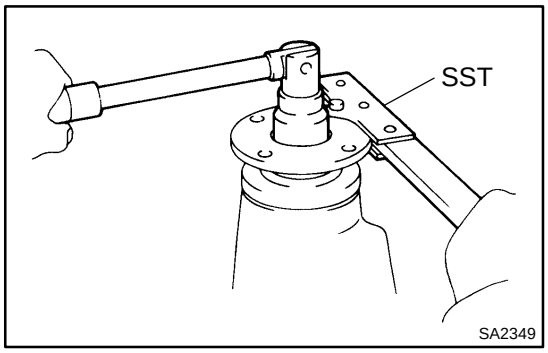

(b) Using SST to hold the flange, remove the nut.
SST 09330−00021

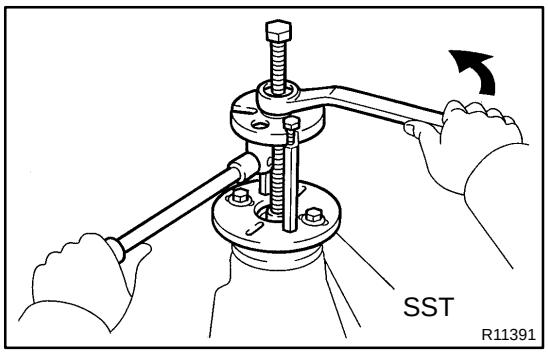

(c) Using SST, remove the companion flange.
SST 09950−30012 (09951−03010, 09953−03010, 09954−03010, 09955−03030, 09956−03050)

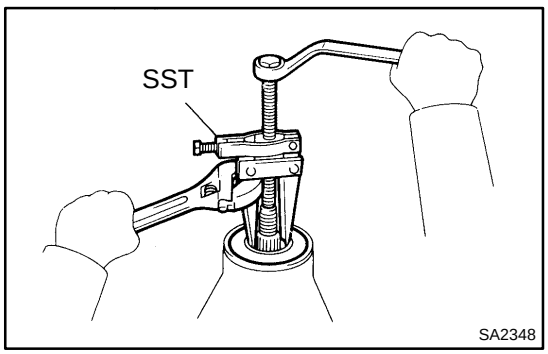

9. REMOVE FRONT OIL SEAL

Using SST, remove the oil seal from the differential carrier.
SST 09308−10010

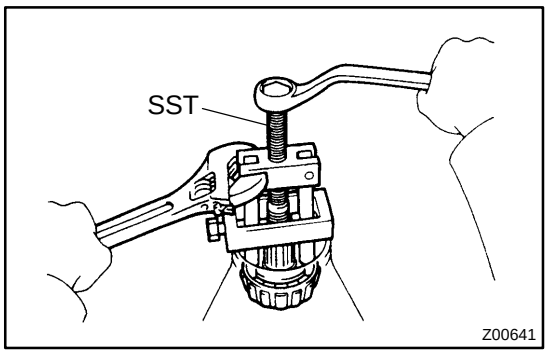

10. REMOVE FRONT BEARING AND BEARING SPACER

(a) Using SST, remove the bearing from the drive pinion.

SST 09556−22010

If the front bearing is damaged or worn, replace the front bearing.

(b) Remove the 2 washers and bearing spacer.

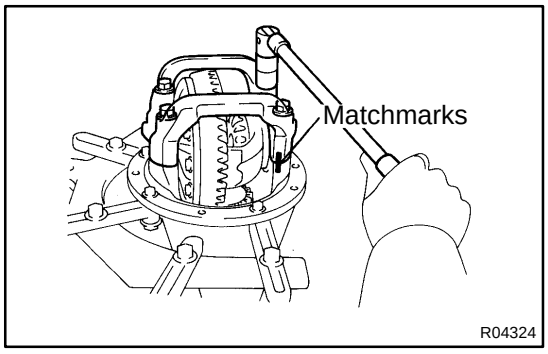

11. REMOVE DIFFERENTIAL CASE

(a) Place matchmarks on the bearing cap and differential carrier.

(b) Remove the 4 bolts and bearing cap.

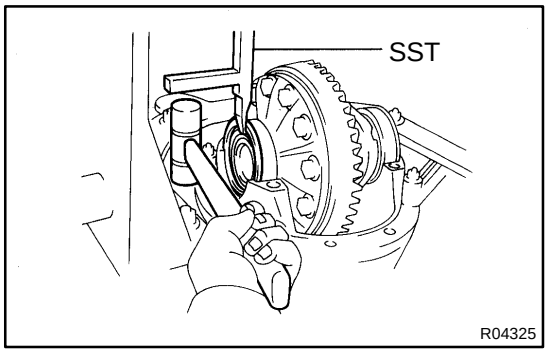

(c) Using SST and a plastic hammer, remove the 2 side bearing plate washers.

SST 09504−22012

HINT:

Measure the plate washer thickness and note it down.

(d) Remove the differential case with the bearing outer races from the carrier.

HINT:

Tag the bearing outer races to show the location for reassembling.

12. REMOVE DRIVE PINION FROM DIFFERENTIAL CARRIER

Remove the drive pinion with the rear bearing.

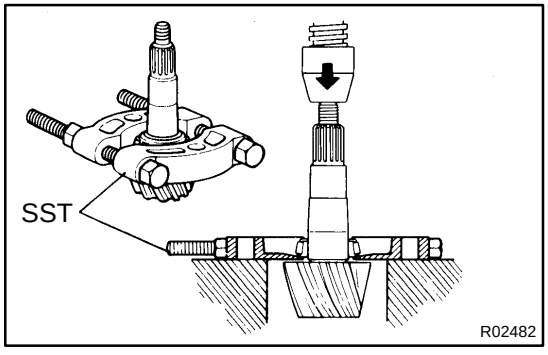

13. REMOVE DRIVE PINION REAR BEARING

Using SST and a press, remove the bearing from the drive pinion.

SST 09950−00020

HINT:

If the drive pinion or ring gear is damaged, replace them as a set.

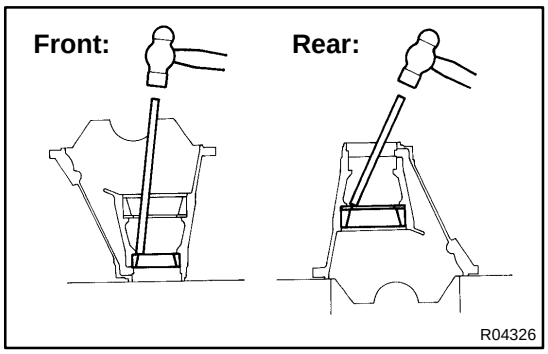

14. REMOVE FRONT AND REAR BEARING OUTER RACES AND ADJUSTING WASHER

NOTICE:

Do not remove the outer races except when replacing the bearings.

Using a brass bar and hammer, remove the outer races and adjusting washer from the carrier.

HINT:

Measure the adjusting washer thickness and note it down.

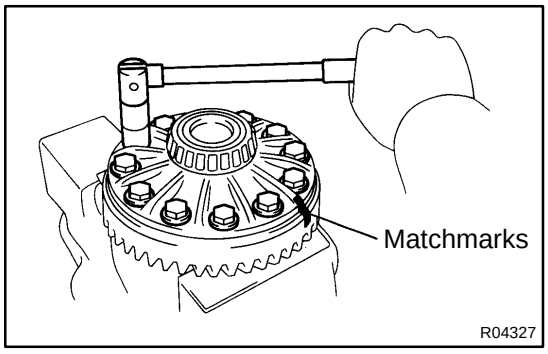

15. REMOVE RING GEAR

(a) Place matchmarks on the ring gear and differential case.

(b) Remove the 12 ring gear set bolts.

(c) Using a plastic hammer, tap on the ring gear to separate it from the differential case.

16. CHECK DIFFERENTIAL CASE RUNOUT

(a) Install the differential case in the differential carrier (See page SA−112).

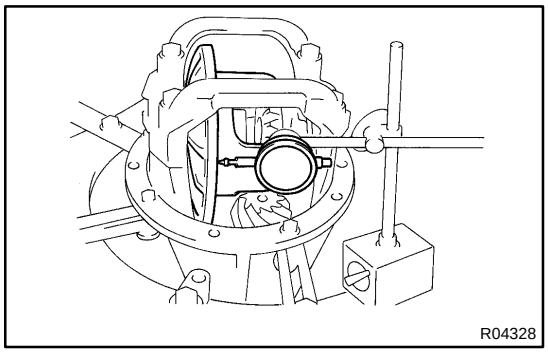

(b) Using a dial indicator, measure the differential case runout.

Maximum case runout: 0.04 mm (0.0016 in.)

(c) Remove the differential case.

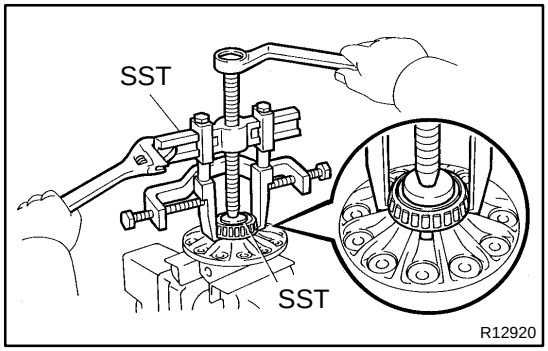

17. REMOVE SIDE BEARINGS

Using SST, remove the 2 side bearings from the differential case.

SST 09950−40011 (09951−04010, 09952−04010, 09953−04020, 09954−04010, 09955−04061, 09957−04010, 09958−04011), 09950−60010 (09951−00480)

HINT:

Fix the claws of SST to the notch in the differential case.

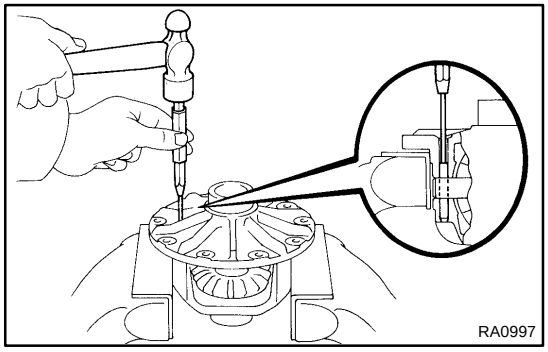

18. DISASSEMBLE DIFFERENTIAL CASE ASSEMBLY

(a) Using a pin punch and hammer, remove the straight pin.

(b) Remove the pinion shaft, 2 pinion gears, pinion gear thrust washers, side gears and side gear thrust washers from the differential case.

SA0BS−04

INSTALLATION

1. INSTALL DIFFERENTIAL CARRIER ASSEMBLY

(a) Install a new gasket.

(b) Install the differential carrier assembly with the 10 washers and nuts.

NOTICE:

Be careful not to damage the installation surface.

Torque: 73 N·m (740 kgf·cm, 54 ft·lbf)

2. CONNECT REAR PROPELLER SHAFT

2WD: See page PR−8

4WD: See page PR−15

3. INSTALL REAR AXLE SHAFTS (See page SA−98)

4. FILL DIFFERENTIAL WITH HYPOID GEAR OIL (See page SA−101)

SA1GD−07

REASSEMBLY

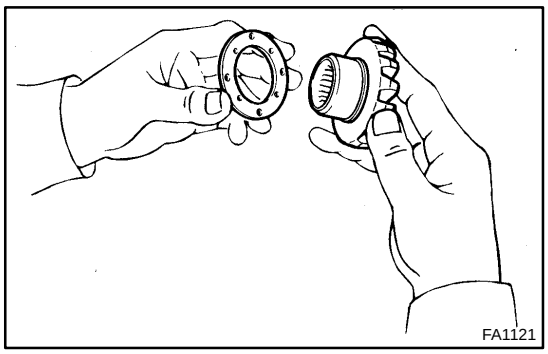

1. ASSEMBLE DIFFERENTIAL CASE

(a) Install the 2 thrust washers to the side gears.

(b) Install the 2 side gears with the thrust washers, 2 pinion gears, 2 pinion gear thrust washers and pinion shaft.

HINT:

Align the holes for the straight pin in the differential case and pinion shaft.

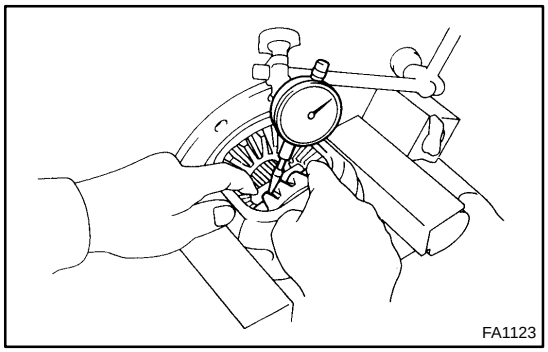

(c) Using a dial indicator, measure the side gear backlash while holding one pinion gear toward the differential case.

Backlash: 0.05 − 0.20 mm (0.0020 − 0.0079 in.)

If the backlash is not within the specified value, replace the side gear thrust washer with an appropriate thickness.

HINT:

Refer to the following table to select thrust washers which will ensure that the backlash is within the specified value.

Washer thickness:

Thickness mm (in.)	Thickness mm (in.)
1.50 (0.0590)	1.75 (0.0689)
1.55 (0.0610)	1.80 (0.0709)
1.60 (0.0630)	1.85 (0.0728)
1.65 (0.0650)	1.90 (0.0748)
1.70 (0.0669)	−

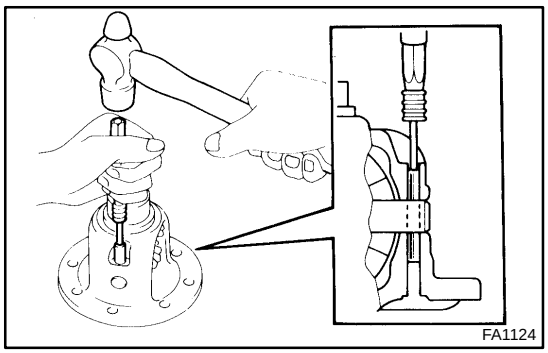

(d) Using a pin punch and hammer, install the straight pin through the holes in the differential case and pinion shaft.

(e) Using a chisel and hammer, stake the outside of the differential case pin hole.

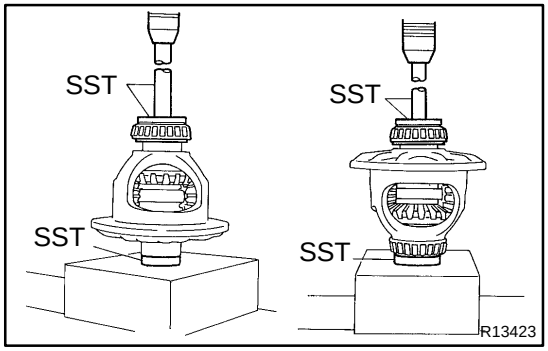

2. INSTALL SIDE BEARINGS

Using SST and a press, install the 2 side bearings into the differential case.

SST 09950−60010 (09951−00480, 09951−00640)
09950−70010 (09951−07150)

3. INSTALL RING GEAR ON DIFFERENTIAL CASE

(a) Clean the contact surfaces of the differential case and ring gear.

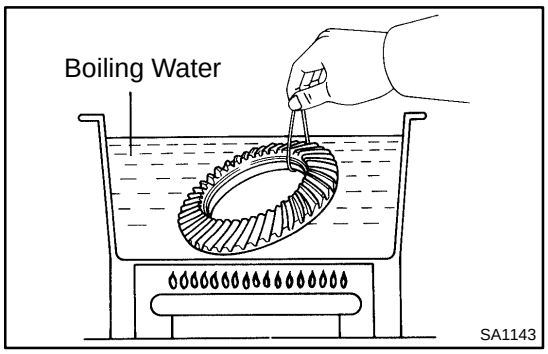

(b) Heat the ring gear to about 100°C (212°F) in boiling water.
(c) Carefully take the ring gear out of the boiling water.

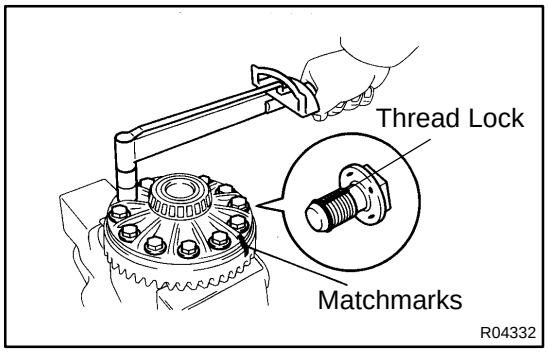

(d) After the moisture on the ring gear has completely evaporated, quickly install the ring gear to the differential case.

HINT:

Align the matchmarks on the ring gear and differential case.

(e) After the ring gear has cooled sufficiently, torque the set bolts to which thread lock has been applied.

Thread lock:
Part No. 08833−00100, THREE BOND 1360K or equivalent.
Torque: 125 N·m (1,270 kgf·cm, 92 ft·lbf)

4. INSPECT RING GEAR RUNOUT

(a) Install the differential case into the carrier and install the plate washers to where there is no play in the bearing (See step 8.).
(b) Install the bearing cap (See step 11.).

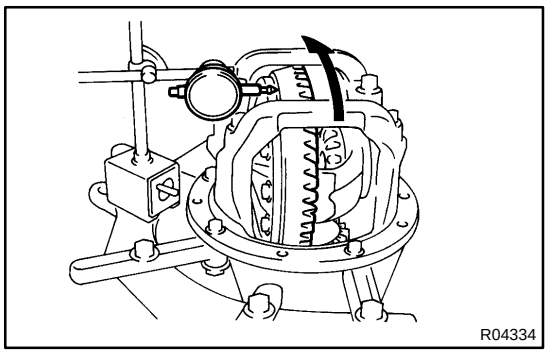

(c) Using a dial indicator, measure the runout of the ring gear.
(d) Remove the bearing caps and differential case.
Maximum runout: 0.05 mm (0.0020 in.)

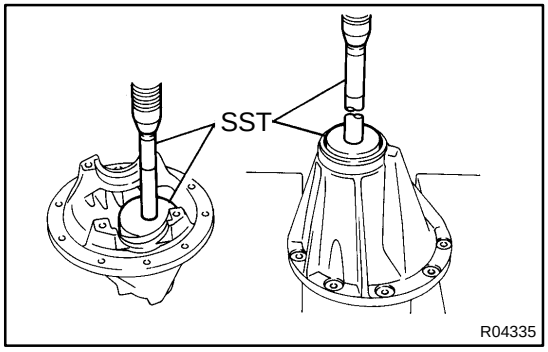

5. INSTALL DRIVE PINION BEARING OUTER RACES AND ADJUSTING WASHER

(a) Using SST and a press, install a new front bearing outer race to the carrier.
SST 09950−60020 (09951−00710),
09950−70010 (09951−07150)
(b) Using SST and a press, install a new adjusting washer and a new rear bearing outer race to the carrier.
SST 09950−60020 (09951−00910),
09950−70010 (09951−07150)

HINT:
First fit a washer with the same thickness as the washer which was removed, then after checking the tooth contact pattern, replace the washer with a different thickness if necessary.

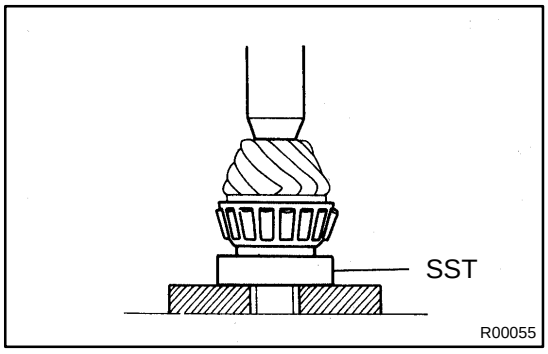

6. INSTALL DRIVE PINION REAR BEARING

Using SST and a press, install the rear bearing onto the drive pinion.

SST 09506−35010

7. TEMPORARILY ADJUST DRIVE PINION PRELOAD

(a) Install the drive pinion and front bearing.

HINT:
After adjusting the ring gear tooth contact pattern, assemble the spacer, washers and oil seal.

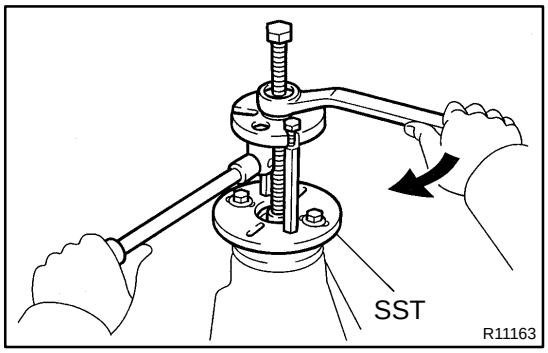

(b) Using SST, install the companion flange.
SST 09950−30012 (09951−03010, 09953−03010, 09954−03010, 09955−03030, 09956−03050)

(c) Coat the threads of the nut with hypoid gear oil.

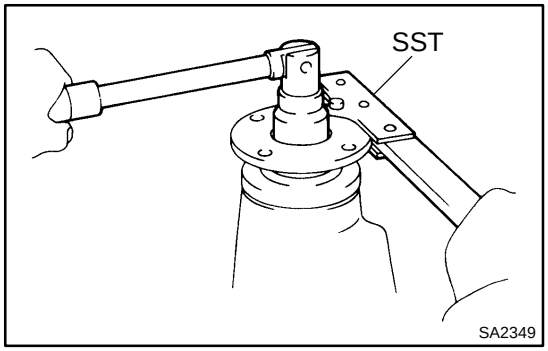

(d) Adjust the drive pinion preload by tightening the companion flange nut.

HINT:
Using SST to hold the flange, torque the nut.
SST 09330−00021

NOTICE:
As there is no spacer, tighten the nut a little at a time and be careful not to overtighten it.

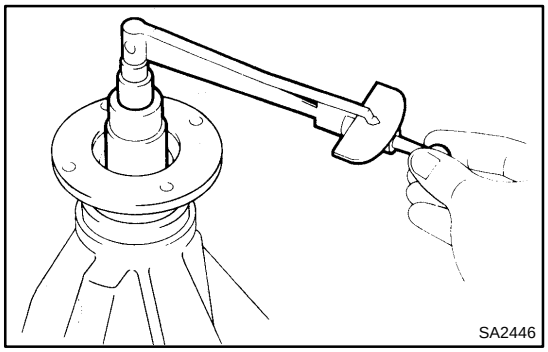

(e) Using a torque wrench, measure the preload of the drive pinion using the backlash between the drive pinion and ring gear.
Preload (at starting):
New bearing
1.3 − 1.9 N·m (13 − 19 kgf·cm, 11.4 − 16.7 in.·lbf)
Reused bearing
0.5 − 0.8 N·m (5 − 8 kgf·cm, 4.3 − 6.9 in.·lbf)

8. INSTALL DIFFERENTIAL CASE IN CARRIER

(a) Place the 2 bearing outer races on their respective bearings. Make sure the right and left races are not interchanged.

(b) Install the differential case in the carrier.

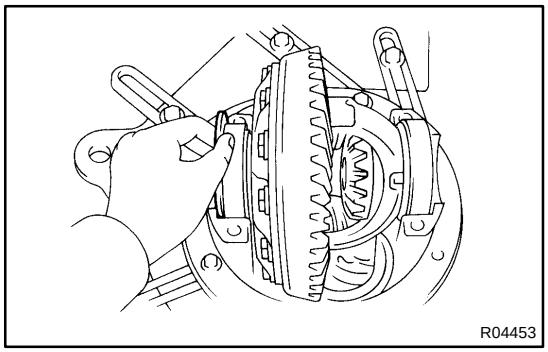

9. ADJUST RING GEAR BACKLASH

(a) Install the plate washer on the ring gear back side.

HINT:

Make sure that the ring gear has backlash.

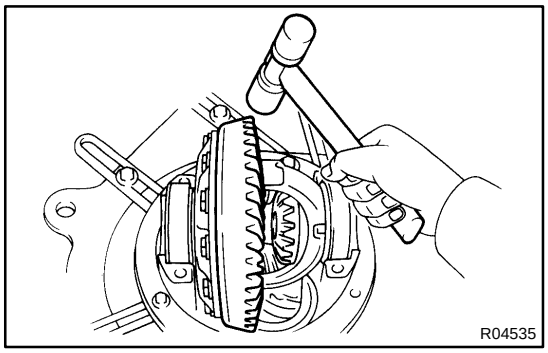

(b) Tap on the ring gear with a plastic hammer so that the washer fits to the bearing.

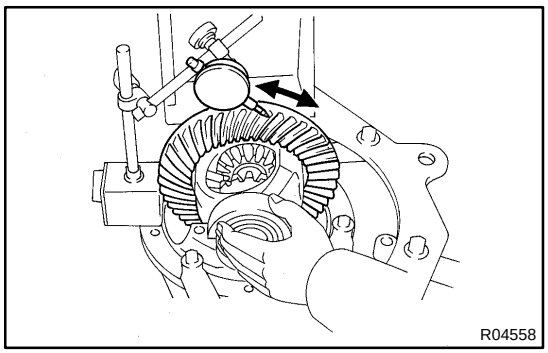

(c) Using a dial indicator, while holding the companion flange, measure the ring gear backlash.

Backlash (reference):
0.13 − 0.18 mm (0.0051 − 0.0071 in.)

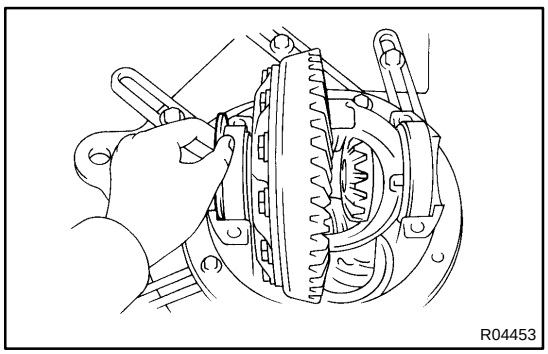

(d) Select a plate washer for back side ring gear using the backlash as a reference.

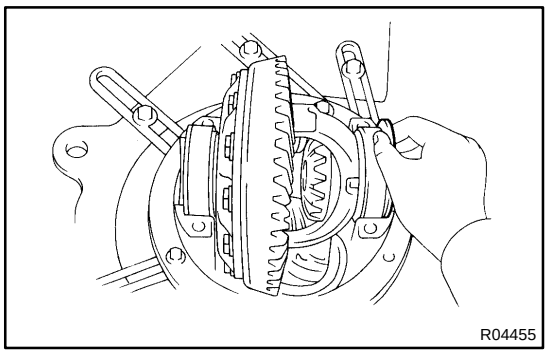
R04455

(e) Select a ring gear teeth side plate washer so that there is no clearance between the outer race and case.
(f) Remove the 2 plate washers and differential case.
(g) Install the plate washer into the ring gear back side of the carrier.

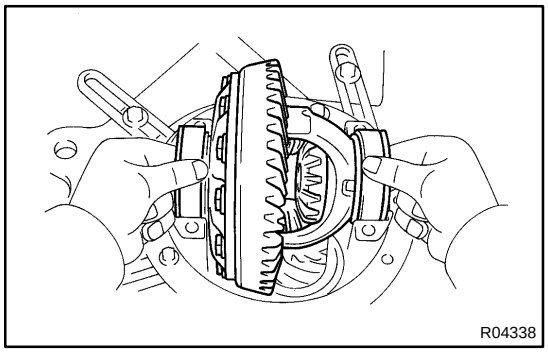
R04338

(h) Place the other plate washer onto the differential case together with the outer race, and install the differential case with the outer race into the carrier.
(i) Tap on the ring gear with a plastic hammer so that the washers fit to the bearing.

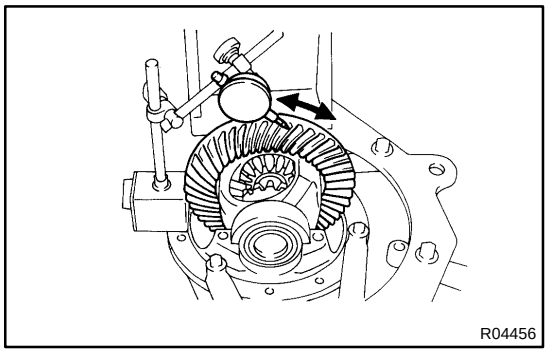
R04456

(j) Using a dial indicator, while holding the companion flange, measure the ring gear backlash.
Backlash: 0.13 − 0.18 mm (0.0051 − 0.0071 in.)

If the backlash is not within the specified value, adjust it by either increasing or decreasing the thickness of the washers on both sides by an equal amount.
HINT:
There should be no clearance between the plate washer and the case.
Make sure that there is a ring gear backlash.

10. ADJUST SIDE BEARING PRELOAD

(a) Remove the ring gear teeth side plate washer and using a micrometer, measure the thickness.
(b) Using the backlash as a reference, install a new washer that is 0.06 − 0.09 mm (0.0024 − 0.0035 in.) thicker than the washer removed.

HINT:
Select a washer which can be pressed in 2/3 of the way with your finger.

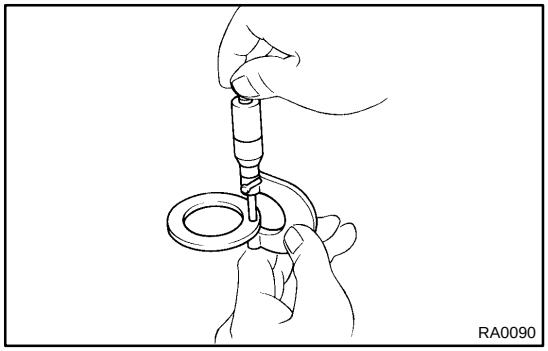
RA0090

(c) Using a plastic hammer, install the plate washer.
(d) Recheck the ring gear backlash.
Backlash: 0.13 − 0.18 mm (0.0051 − 0.0071 in.)

If the backlash is not within the specified value, adjust it by either increasing or decreasing the thickness of washers on both sides by equal amount.
HINT:
The backlash will change by about 0.02 mm (0.0008 in.) corresponding to 0.03 mm (0.0012 in.) change in the plate washer.

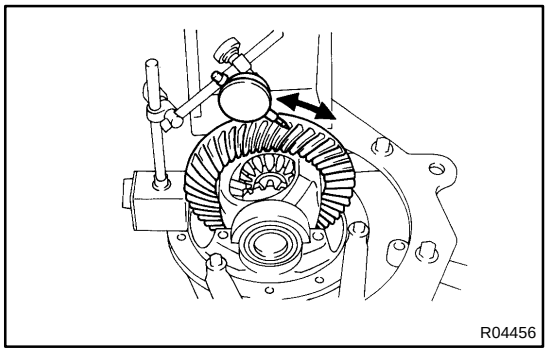
R04456

Washer thickness:

Mark	Thickness mm (in.)	Mark	Thickness mm (in.)	Mark	Thickness mm (in.)
58	2.58 (0.1015)	90	2.90 (0.1142)	22	3.22 (0.1268)
60	2.60 (0.1024)	92	2.92 (0.1150)	24	3.24 (0.1276)
62	2.62 (0.1031)	94	2.94 (0.1157)	26	3.26 (0.1283)
64	2.64 (0.1039)	96	2.96 (0.1165)	28	3.28 (0.1291)
66	2.66 (0.1047)	98	2.98 (0.1173)	30	3.30 (0.1299)
68	2.68 (0.1055)	00	3.00 (0.1181)	32	3.32 (0.1307)
70	2.70 (0.1063)	02	3.02 (0.1189)	34	3.34 (0.1315)
72	2.72 (0.1071)	04	3.04 (0.1197)	36	3.36 (0.1323)
74	2.74 (0.1079)	06	3.06 (0.1205)	38	3.38 (0.1331)
76	2.76 (0.1087)	08	3.08 (0.1213)	40	3.40 (0.1339)
78	2.78 (0.1094)	10	3.10 (0.1220)	42	3.42 (0.1346)
80	2.80 (0.1102)	12	3.12 (0.1228)	44	3.44 (0.1354)
82	2.82 (0.1110)	14	3.14 (0.1236)	46	3.46 (0.1362)
84	2.84 (0.1118)	16	3.16 (0.1244)	48	3.48 (0.1370)
86	2.86 (0.1126)	18	3.18 (0.1252)	−	
88	2.88 (0.1134)	20	3.20 (0.1260)	−	

11. INSTALL BEARING CAP

(a) Align the matchmarks on the cap and carrier.

(b) Install and torque the 4 bolts.

Torque: 113 N·m (1,150 kgf·cm, 83 ft·lbf)

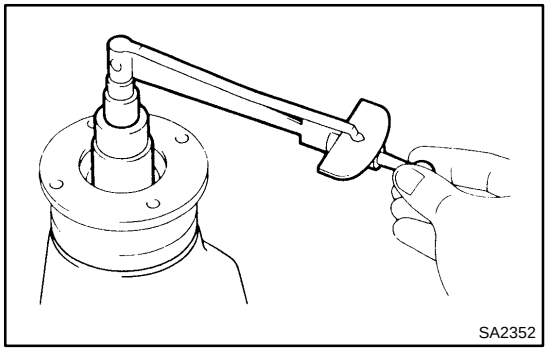
SA2352

12. MEASURE TOTAL PRELOAD

Using a torque wrench, measure the total preload with the teeth of the drive pinion and ring gear in contact.

Total preload (at starting):

Drive pinion preload plus 0.4 − 0.6 N·m (4 − 6 kgf·cm, 3.5 − 5.2 in.·lbf)

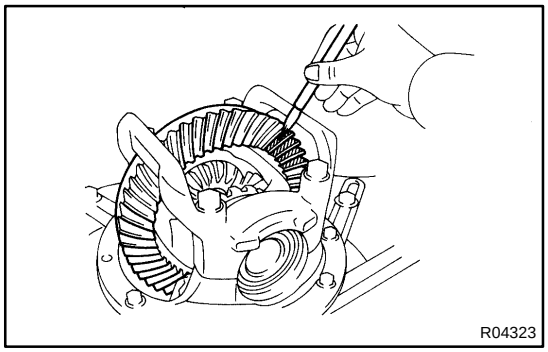
R04323

13. INSPECT TOOTH CONTACT BETWEEN RING GEAR AND DRIVE PINION

(a) Coat 3 or 4 teeth at three different positions on the ring gear with red lead primer.

(b) Hold the companion flange firmly and rotate the ring gear in both directions.

(c) Inspect the teeth pattern.

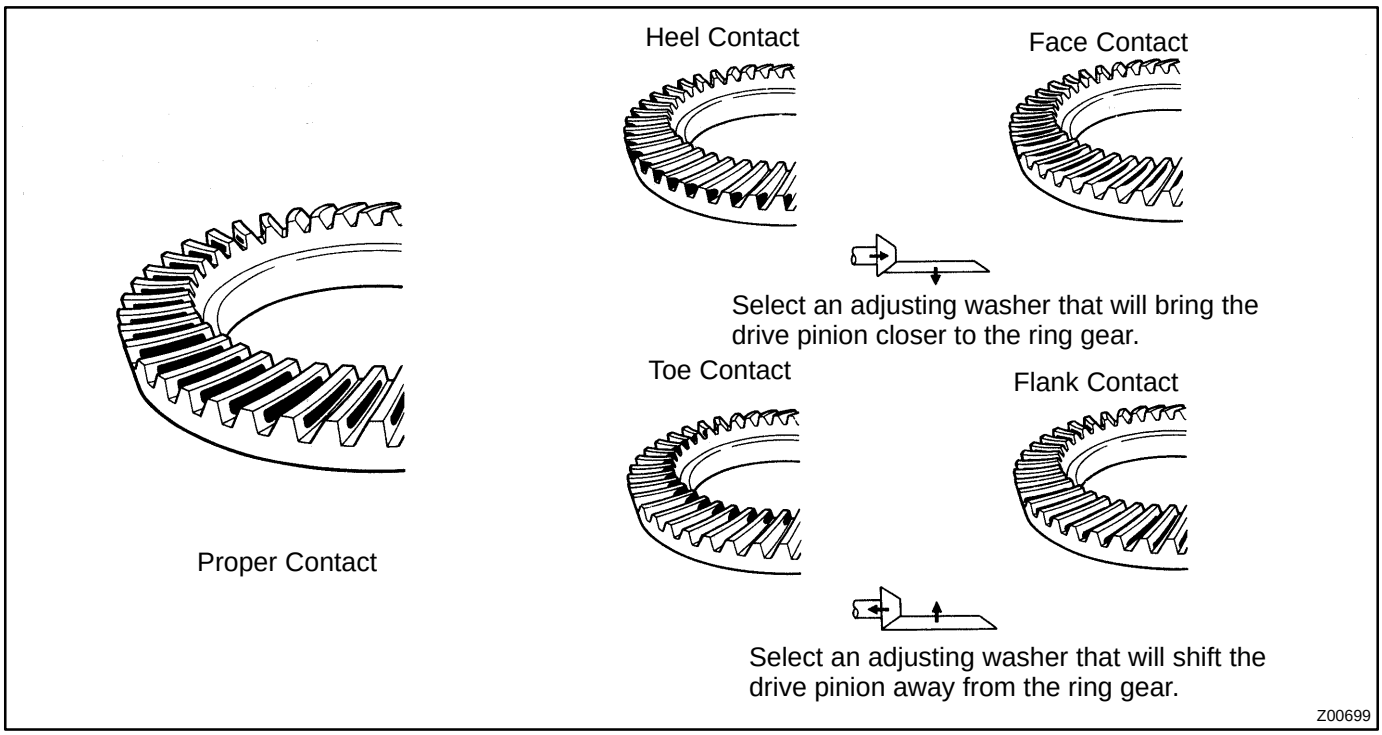

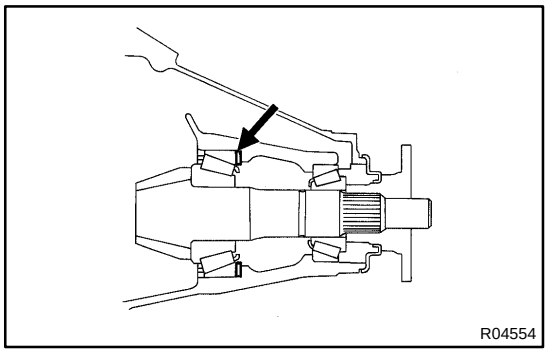

If the teeth are not contacting properly, use the following table to select a proper washer for correction.

Washer thickness:

Mark	Thickness mm (in.)	Mark	Thickness mm (in.)	Mark	Thickness mm (in.)
87	1.87 (0.0736)	01	2.01 (0.0791)	15	2.15 (0.0846)
88	1.88 (0.0740)	02	2.02 (0.0795)	16	2.16 (0.0850)
89	1.89 (0.0744)	03	2.03 (0.0799)	17	2.17 (0.0854)
90	1.90 (0.0748)	04	2.04 (0.0803)	18	2.18 (0.0858)
91	1.91 (0.0752)	05	2.05 (0.0807)	19	2.19 (0.0862)
92	1.92 (0.0756)	06	2.06 (0.0811)	20	2.20 (0.0866)
93	1.93 (0.0760)	07	2.07 (0.0815)	21	2.21 (0.0870)
94	1.94 (0.0764)	08	2.08 (0.0819)	22	2.22 (0.0874)
95	1.95 (0.0768)	09	2.09 (0.0823)	23	2.23 (0.0878)
96	1.96 (0.0772)	10	2.10 (0.0827)	24	2.24 (0.0882)
97	1.97 (0.0776)	11	2.11 (0.0831)	25	2.25 (0.0886)
98	1.98 (0.0780)	12	2.12 (0.0835)	26	2.26 (0.0890)
99	1.99 (0.0783)	13	2.13 (0.0839)	27	2.27 (0.0894)
00	2.00 (0.0787)	14	2.14 (0.0843)	28	2.28 (0.0898)

14. REMOVE COMPANION FLANGE (See page SA−107)

15. REMOVE FRONT BEARING (See page SA−107)

16. INSTALL NEW BEARING SPACER, 2 WASHERS AND FRONT BEARING

(a) Install a new bearing spacer and 2 washers, and place the front bearing.

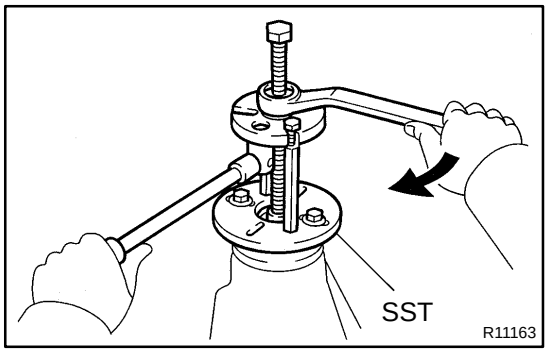

(b) Using SST and the companion flange, install the front bearing then remove the companion flange.

SST 09950−30012 (09951−03010, 09953−03010, 09954−03010, 09955−03030, 09956−03050)

17. INSTALL NEW OIL SEAL

(a) Coat a new oil seal lip with MP grease.

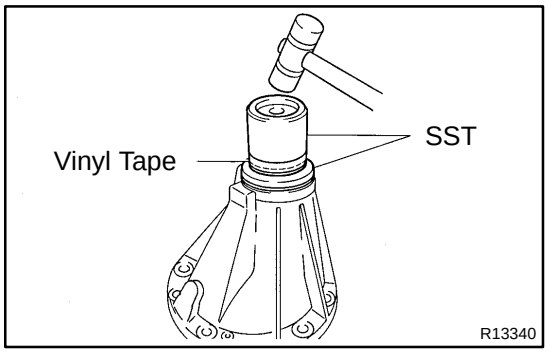

(b) Using SST and a plastic hammer, install the oil seal until its surface is flush with the differential carrier end.

SST 09316−12010, 09649−17010

HINT:

Connect 2 SST with vinyl tape.

18. INSTALL COMPANION FLANGE

(a) Place the companion flange.

(b) Coat the threads of a new nut with hypoid gear oil.

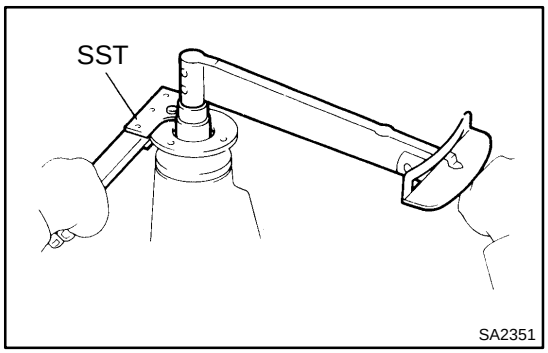

(c) Using SST to hold the flange, torque the nut.

SST 09330−00021

Torque: 147 N·m (1,500 kgf·cm, 109 ft·lbf)

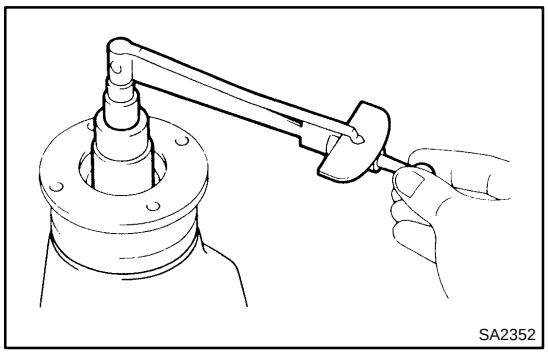

19. ADJUST DRIVE PINION PRELOAD

Using a torque wrench, measure the preload of the drive pinion using the backlash between the drive pinion and ring gear.

Preload (at starting):
New bearing
1.3 − 1.9 N·m (13 − 19 kgf·cm, 11.4 − 16.7 in.·lbf)
Reused bearing
0.5 − 0.8 N·m (5 − 8 kgf·cm, 4.3 − 6.9 in.·lbf)

If the preload is greater than the specified value, replace the bearing spacer.

If the preload is less than the specified value, retighten the nut with a force of 13 N·m (130 kgf·cm, 9 ft·lbf) until the specified preload is reached.

Torque: 451 N·m (4,600 kgf·cm, 333 ft·lbf) or less

If the maximum torque is exceeded while retightening the nut, replace the bearing spacer and repeat the preload procedure. Do not loosen the pinion nut to reduce the preload.

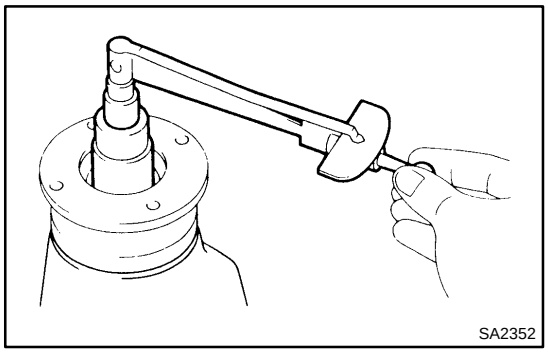

20. CHECK TOTAL PRELOAD

Using a torque wrench, measure the total preload with the teeth of the drive pinion and ring gear in contact.

Total preload (at starting):
Drive pinion preload plus 0.4 − 0.6 N·m (4 − 6 kgf·cm, 3.5 − 5.2 in.·lbf)

21. CHECK RING GEAR BACKLASH

Using a dial indicator, measure the ring gear backlash.

Backlash: 0.13 − 0.18 mm (0.0051 − 0.0071 in.)

22. RECHECK TOOTH CONTACT BETWEEN RING GEAR AND DRIVE PINION (See step 13.)

23. CHECK COMPANION FLANGE RUNOUT
(See page SA−107)

24. STAKE DRIVE PINION NUT

SA1KE−02

REMOVAL

1. DRAIN HYPOID GEAR OIL

2. REMOVE REAR AXLE SHAFTS (See page SA−93)

3. DISCONNECT REAR PROPELLER SHAFT

2WD: See page PR−3

4WD: See page PR−10

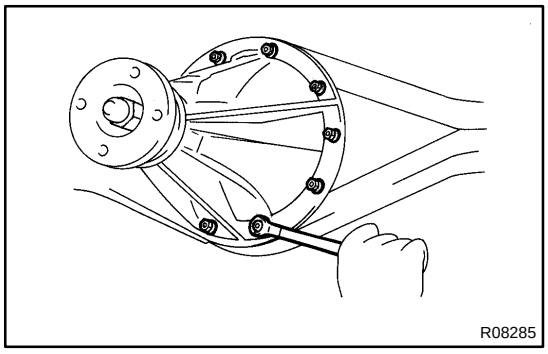

4. REMOVE DIFFERENTIAL CARRIER ASSEMBLY

(a) Remove the 10 nuts, washers and differential carrier assembly.

NOTICE:

Be careful not to damage the installation surface.

(b) Remove the gasket.

SA0BQ−04

REPLACEMENT

REPLACE COMPANION FLANGE DUST DEFLECTOR

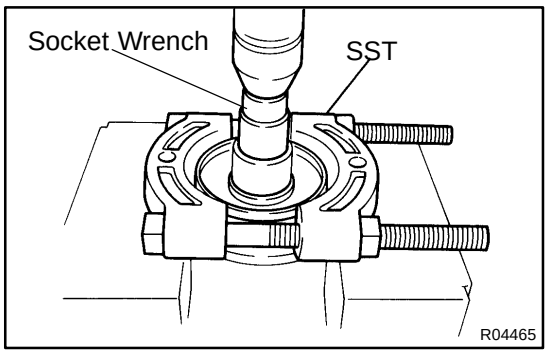

(a) Using SST, a socket wrench and a press, remove the dust deflector.
SST 09950−00020

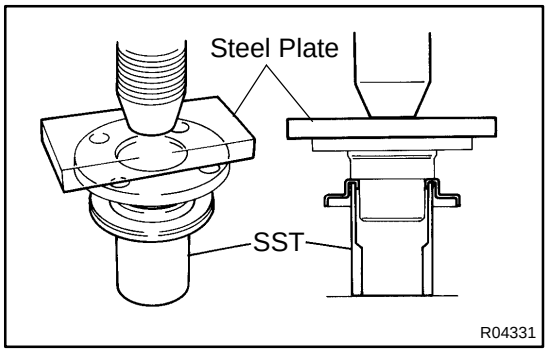

(b) Using SST, a press and steel plate, install a new dust deflector.
SST 09523−36010

REAR DIFFERENTIAL CARRIER (w/ LSD)

COMPONENTS

SA28M−02

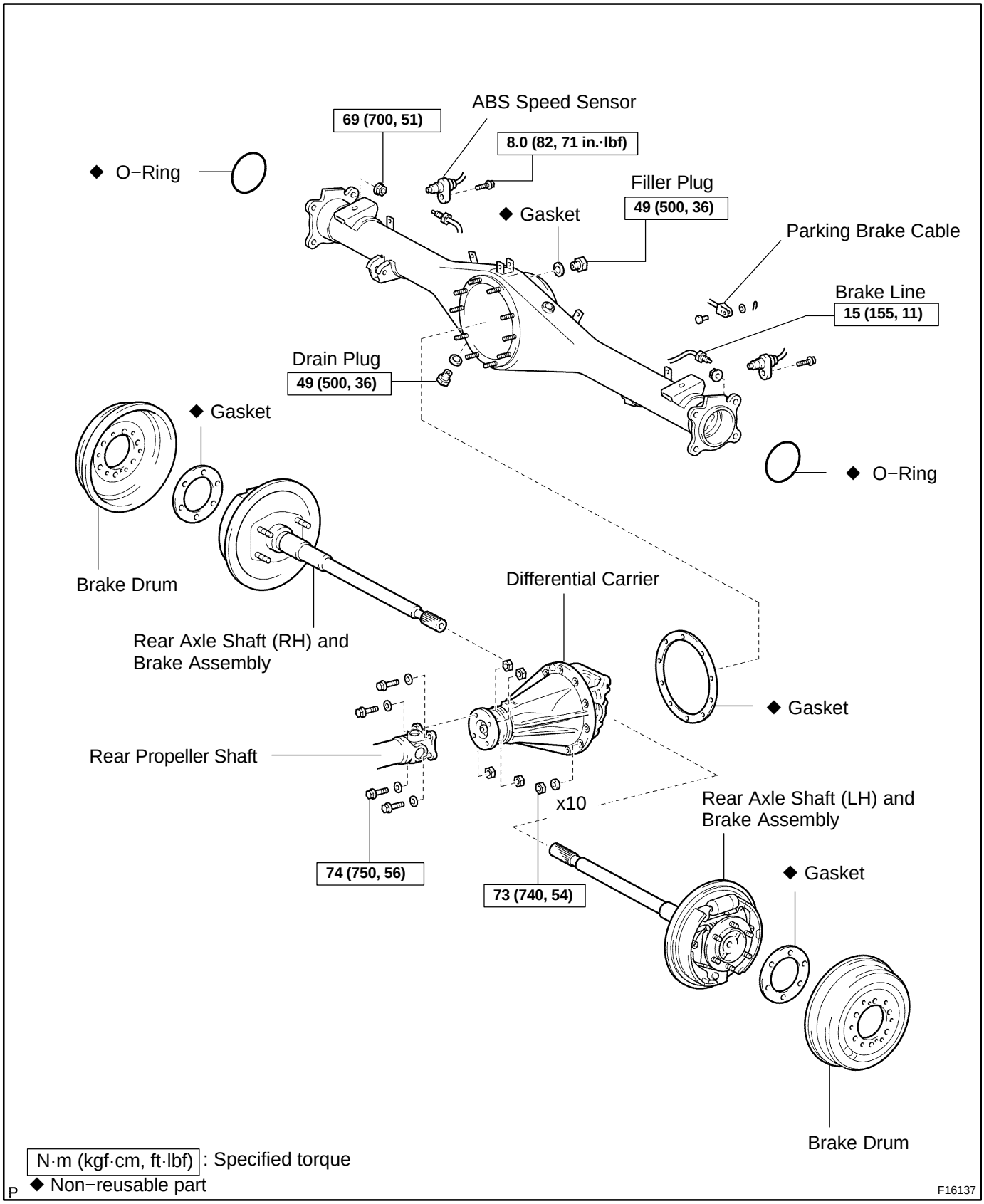

N·m (kgf·cm, ft·lbf) : Specified torque

◆ Non−reusable part

P

F16137

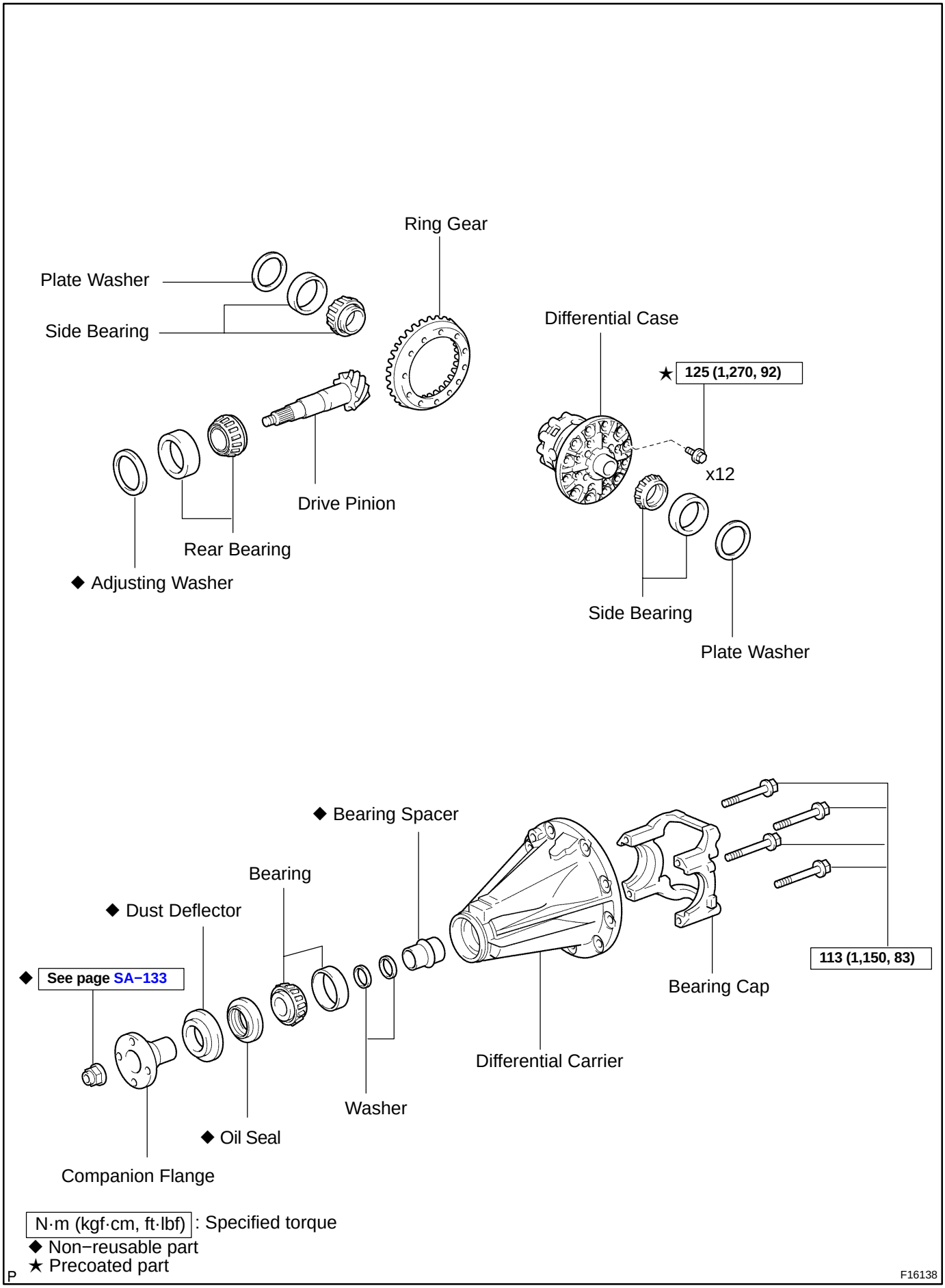

N·m (kgf·cm, ft·lbf) : Specified torque
◆ Non−reusable part
★ Precoated part

P

F16138

#: If the side gear backlash has been adjusted by TOYOTA dealer, adjusting shims are installed between the side gear thrust washer and the differential case.

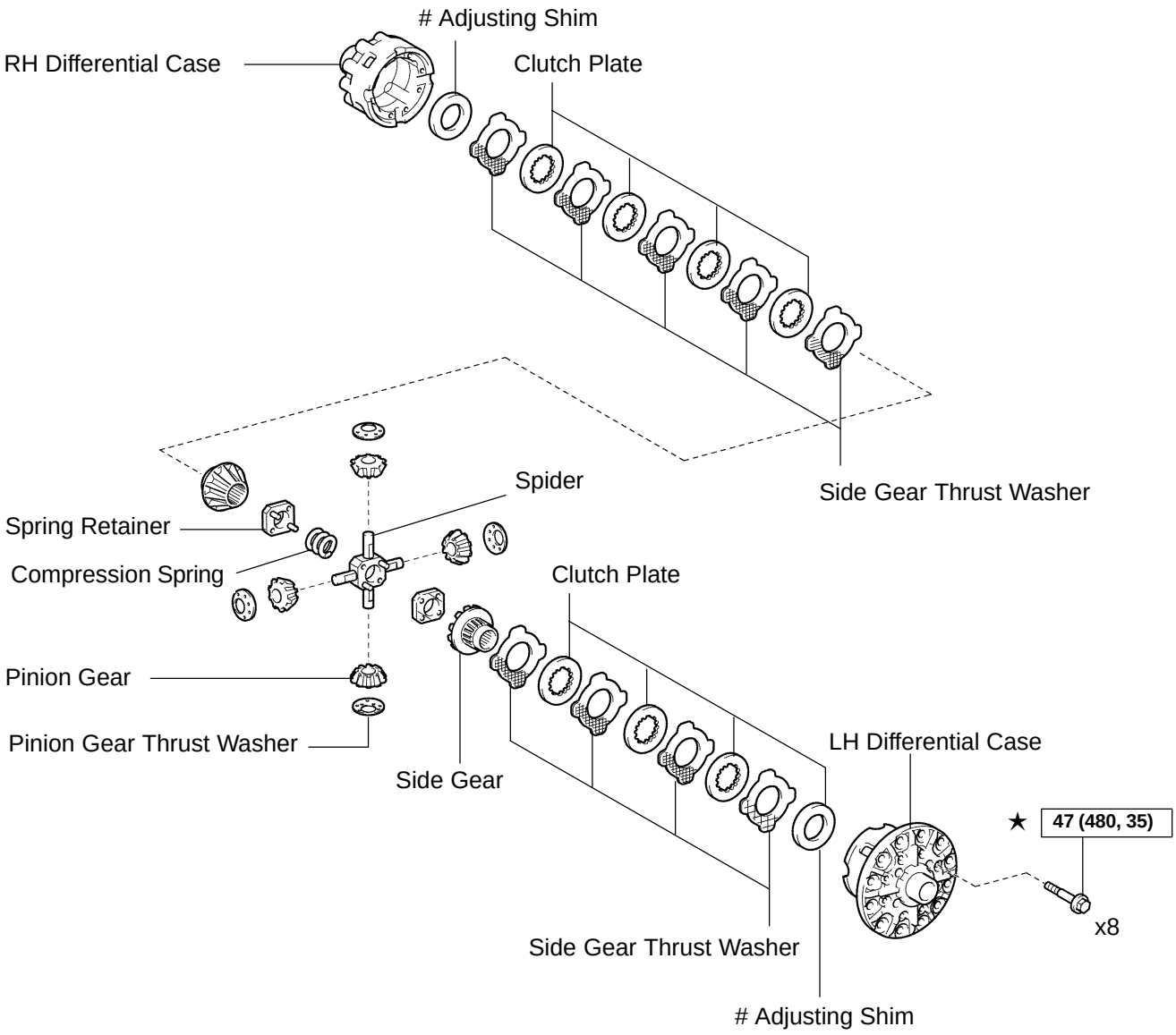

N·m (kgf·cm, ft·lbf) : Specified torque

★ Precoated part

F16145

SA28O−02

DISASSEMBLY

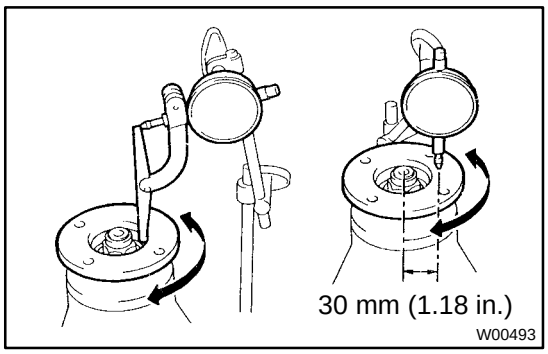

1. CHECK RUNOUT OF COMPANION FLANGE

Using a dial indicator, measure the vertical and lateral runout of the companion flange.

Maximum runout: 0.09 mm (0.0035 in.)

If the runout is not within the specification, replace the companion flange.

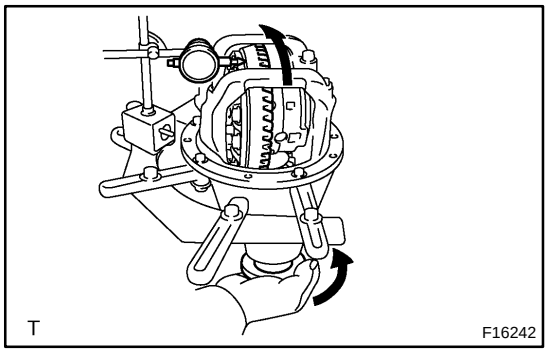

2. CHECK RING GEAR RUNOUT

Using a dial indicator, measure the ring gear runout.

Maximum runout: 0.05 mm (0.0020 in.)

If the runout is not within the specification, replace the ring gear.

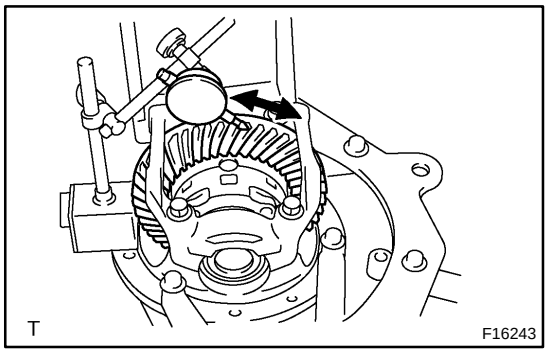

3. CHECK RING GEAR BACKLASH

Using a dial indicator, while holding the companion flange, measure the ring gear backlash.

Backlash: 0.13 − 0.18 mm (0.0051 − 0.0071 in.)

HINT:

Measure at 3 or more positions around the circumference of the ring gear.

If the backlash is not within the specification, adjust the side bearing preload or repair if necessary.

4. CHECK TOOTH CONTACT BETWEEN RING GEAR AND DRIVE PINION (See page SA−133)

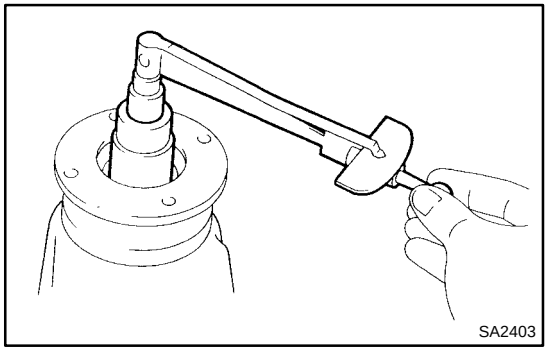

5. MEASURE DRIVE PINION PRELOAD

Using a torque wrench, measure the drive pinion preload using the backlash of the drive pinion and ring gear.

Preload (at starting):

0.6 − 0.9 N·m (6.1 − 9.2 kgf·cm, 5.3 − 8.0 in.·lbf)

6. CHECK TOTAL PRELOAD

Using a torque wrench, measure the preload with the teeth of the drive pinion and ring gear in contact.

Total preload (at starting):
Drive pinion preload plus
0.4 − 0.6 N·m (4 − 6 kgf·cm, 3.5 − 5.2 in.·lbf)

If necessary, disassemble and inspect the differential.

7. REMOVE COMPANION FLANGE

(a) Using a chisel and a hammer, unstake the nut.

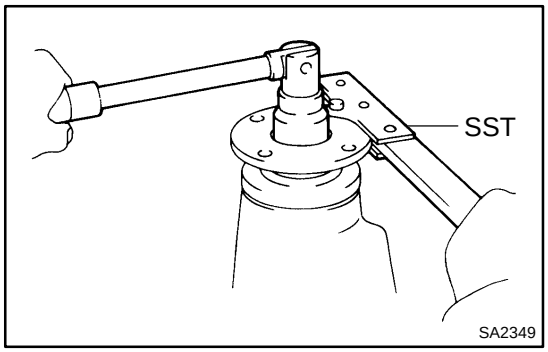

(b) Using SST to hold the flange, remove the nut.
SST 09330−00021

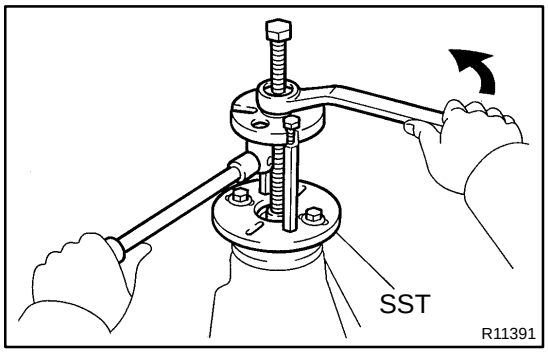

(c) Using SST, remove the companion flange.
SST 09950−30012 (09951−03010, 09953−03010, 09954−03010, 09955−03030, 09956−03030)

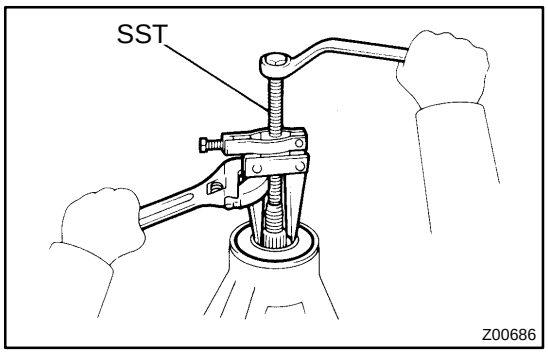

8. REMOVE FRONT OIL SEAL

Using SST, remove the oil seal from the differential carrier.
SST 09308−10010

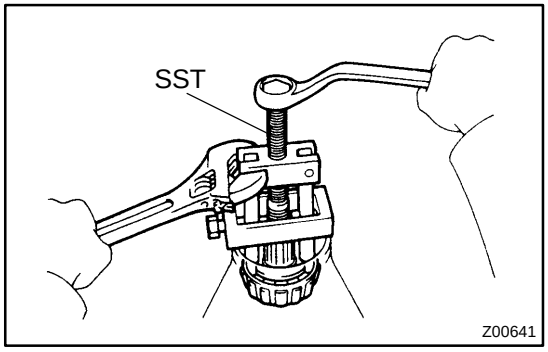

9. REMOVE FRONT BEARING AND BEARING SPACER

(a) Using SST, remove the bearing from the drive pinion.
SST 09556−22010

If the front bearing is damaged or worn, replace the front bearing.

(b) Remove the 2 washers and bearing spacer.

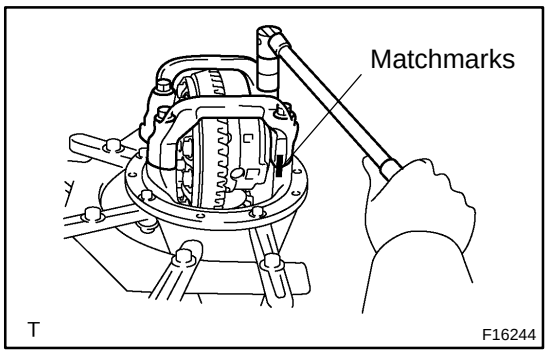

10. REMOVE DIFFERENTIAL CASE

(a) Place matchmarks on the bearing cap and differential carrier.

(b) Remove the 4 bolts and bearing cap.

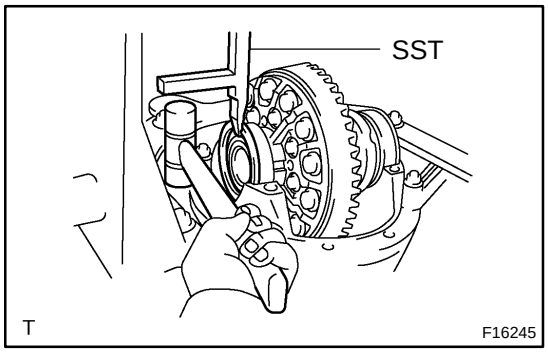

(c) Using SST and a plastic hammer, remove the 2 side bearing plate washers.

SST 09504−22012

HINT:

Measure the plate washer thickness and note it down.

(d) Remove the differential case with the bearing outer races from the carrier.

HINT:

Tag the disassembled parts to show the location for reassembling.

11. REMOVE DRIVE PINION FROM DIFFERENTIAL CARRIER

Remove the drive pinion with the rear bearing.

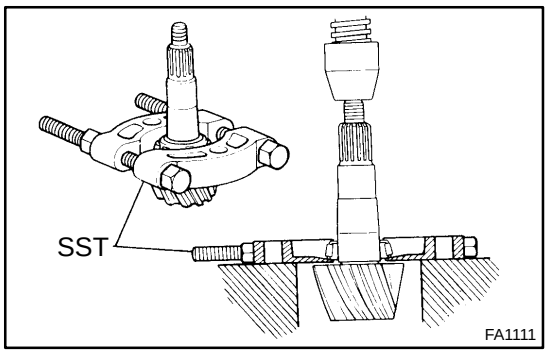

12. REMOVE DRIVE PINION REAR BEARING

Using SST and a press, remove the bearing from the drive pinion.

SST 09950−00020

HINT:

If the drive pinion or ring gear is damaged, replace them as a set.

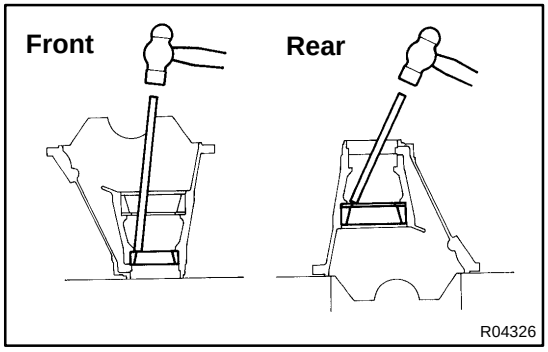

13. REMOVE FRONT AND REAR BEARING OUTER RACES AND ADJUST WASHER

NOTICE:

Do not remove the outer races except when replacing the bearings.

Using a brass bar and hammer, remove the outer races and adjusting washer from the carrier.

HINT:

Measure the adjusting washer thickness and note it down.

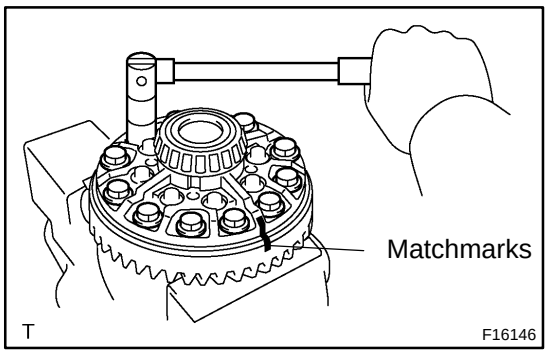

14. REMOVE RING GEAR

(a) Place matchmarks on the ring gear and differential case.

(b) Remove the 12 ring gear set bolts.

(c) Using a plastic hammer, tap on the ring gear to separate it from the differential case.

15. CHECK DIFFERENTIAL CASE RUNOUT

(a) Install the differential case in the differential carrier (See page SA−133).

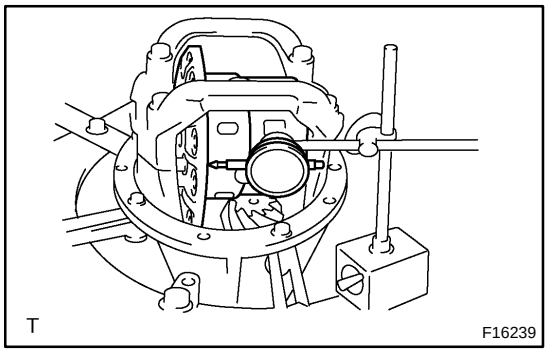

(b) Using a dial indicator, measure the differential case runout.

Maximum case runout: 0.04 mm (0.0016 in.)

(c) Remove the differential case.

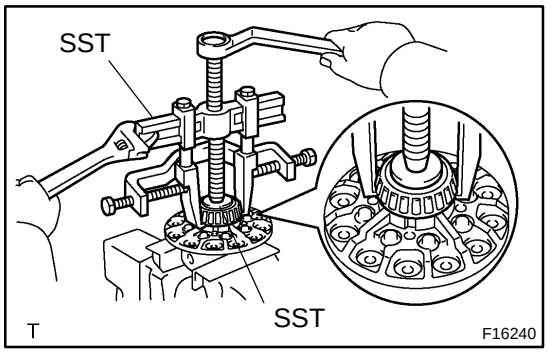

16. REMOVE SIDE BEARINGS

Using SST, remove the 2 side bearings from the differential case.

SST 09950−40011 (09951−04010, 09952−04010, 09953−04020, 09954−04010, 09955−04061, 09957−04010, 09958−04011), 09950−60010 (09951−00480)

HINT:

Fix the claws of SST to the notch in the differential case.

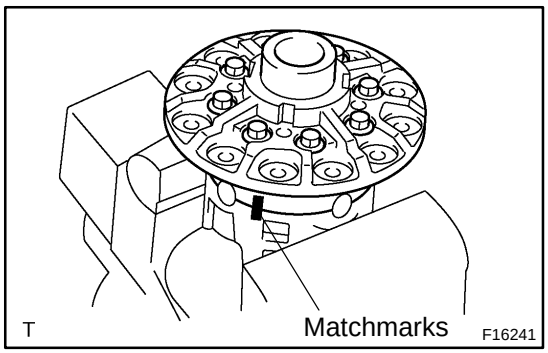

17. DISASSEMBLE DIFFERENTIAL CASE

(a) Place matchmarks on the LH and RH cases.

(b) Remove the 8 bolts uniformly, a little at a time.

(c) Using a plastic hammer, separate the LH and RH cases.

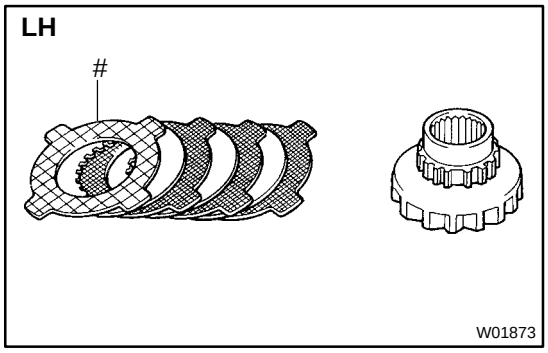

18. REMOVE THESE PARTS FROM DIFFERENTIAL LH AND RH CASES:

HINT:

Keep the disassembled parts in order.

(a) Remove these parts from the LH case.

(1) Remove the side gear.

(2) Remove the 4 side gear thrust washers.

(3) Remove the 3 clutch plates.

HINT:
Face the rough side of the thrust washer marked by ”#” to the differential case.

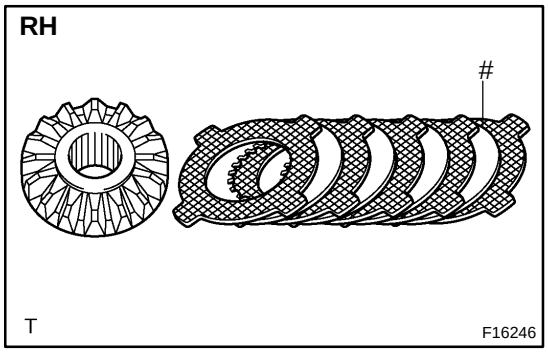

(b) Remove these parts from the RH case.
(1) Remove the spring LH retainer.
(2) Remove the compression spring.
(3) Remove the spider with the pinion gear.
(4) Remove the spring RH retainer.
(5) Remove the side gear.
(6) Remove the 5 side gear thrust washers.
(7) Remove the 4 clutch plates.

HINT:
Face the rough side of the thrust washer marked by ”#” to the differential case.

SA161−07

INSPECTION

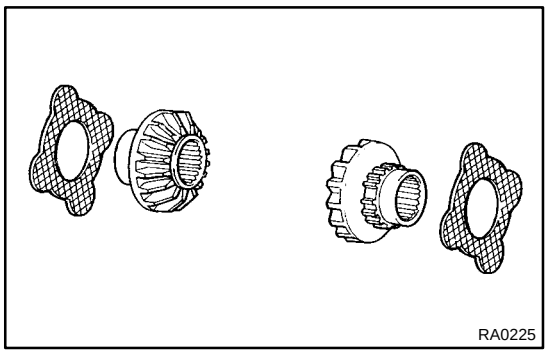
RA0225

1. REPLACE PARTS THAT ARE DAMAGED OR WORN

HINT:

If replacing the side gear, also replace the thrust washer that contacts with it.

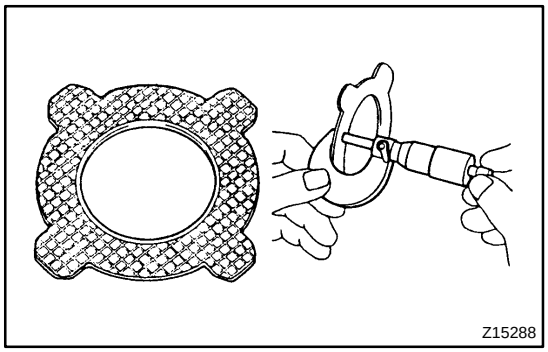
Z15288

2. INSPECT SIDE GEAR THRUST WASHERS FOR WEAR OR DAMAGE

Using a micrometer, measure that the contact surface of the thrust washer is even and check that no bare metal is showing.

Thickness (For reference):
1.77 − 2.49 mm (0.0697 − 0.0980 in.)

If necessary, replace the thrust washers.

HINT:

If replacing the thrust washer, also replace the clutch plate that contacts with it.

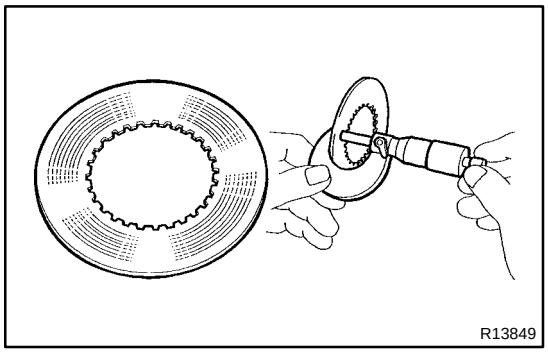
R13849

3. INSPECT CLUTCH PLATE FOR WEAR OR DAMAGE

Using a micrometer, measure the contact surface of the clutch plate and check that there is no abnormal wear.

Thickness (For reference):
1.57 − 1.63 mm (0.0618 − 0.0642 in.)

If necessary, replace the clutch plate.

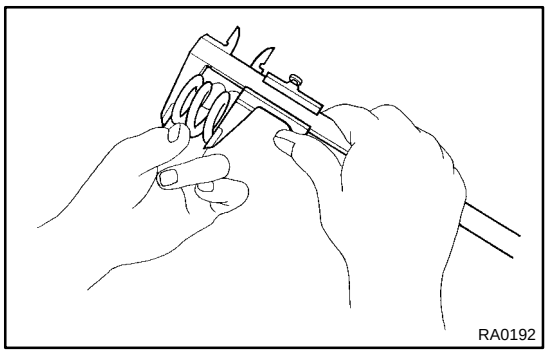
RA0192

4. INSPECT COMPRESSION SPRING FREE LENGTH

Using vernier calipers, measure the free length of the spring.

Length (For reference): 26.4 mm (1.039 in.)

SA164−11

INSTALLATION

1. INSTALL DIFFERENTIAL CARRIER ASSEMBLY

(a) Install a new gasket.

(b) Install the differential carrier assembly with the 10 washers and nuts.

NOTICE:

Be careful not to damage the installation surface.

Torque: 73 N·m (740 kgf·cm, 54 ft·lbf)

2. CONNECT REAR PROPELLER SHAFT

2WD: See page PR−8

4WD: See page PR−15

3. INSTALL REAR AXLE SHAFTS (See page SA−98)

4. FILL DIFFERENTIAL WITH HYPOID GEAR OIL (See page SA−101)

SA28P−02

REASSEMBLY

HINT:

- When reusing the side gear, thrust washers and clutch plates, skip the STEP 1.
- Using a shop rag, clean off any foreign object from the parts.
- Apply all of the sliding and rotating surfaces with LSD oil.

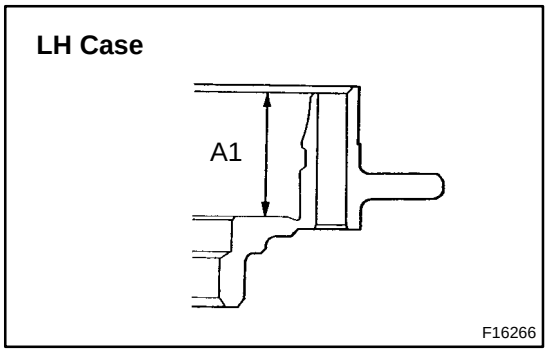

1. LH side:

SELECT ADJUSTING SHIM(S)

(a) Measure the differential case dimension ”A1”, as shown in the illustration.

(b) Install the thrust washers (face their fine side to the side gear) and clutch plates on the side gear.

HINT:

Install the new thrust washer (Mark N) instead of the thrust washers (Mark A − M) to the differential case side.

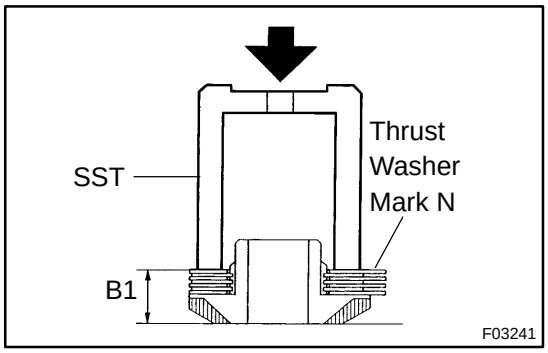

(c) Using SST to press down the thrust washers and clutch plates with about pressure of 10 kgf (22 lbf), measure dimension ”B1”, as shown in the illustration.

SST 09649−17010

(d) Referring to the following selection table on the next page, select the proper adjusting shim(s).

Adjusting shim thickness =

A1 − B1 − 16.175 mm (0.63681 in.)

LH Side

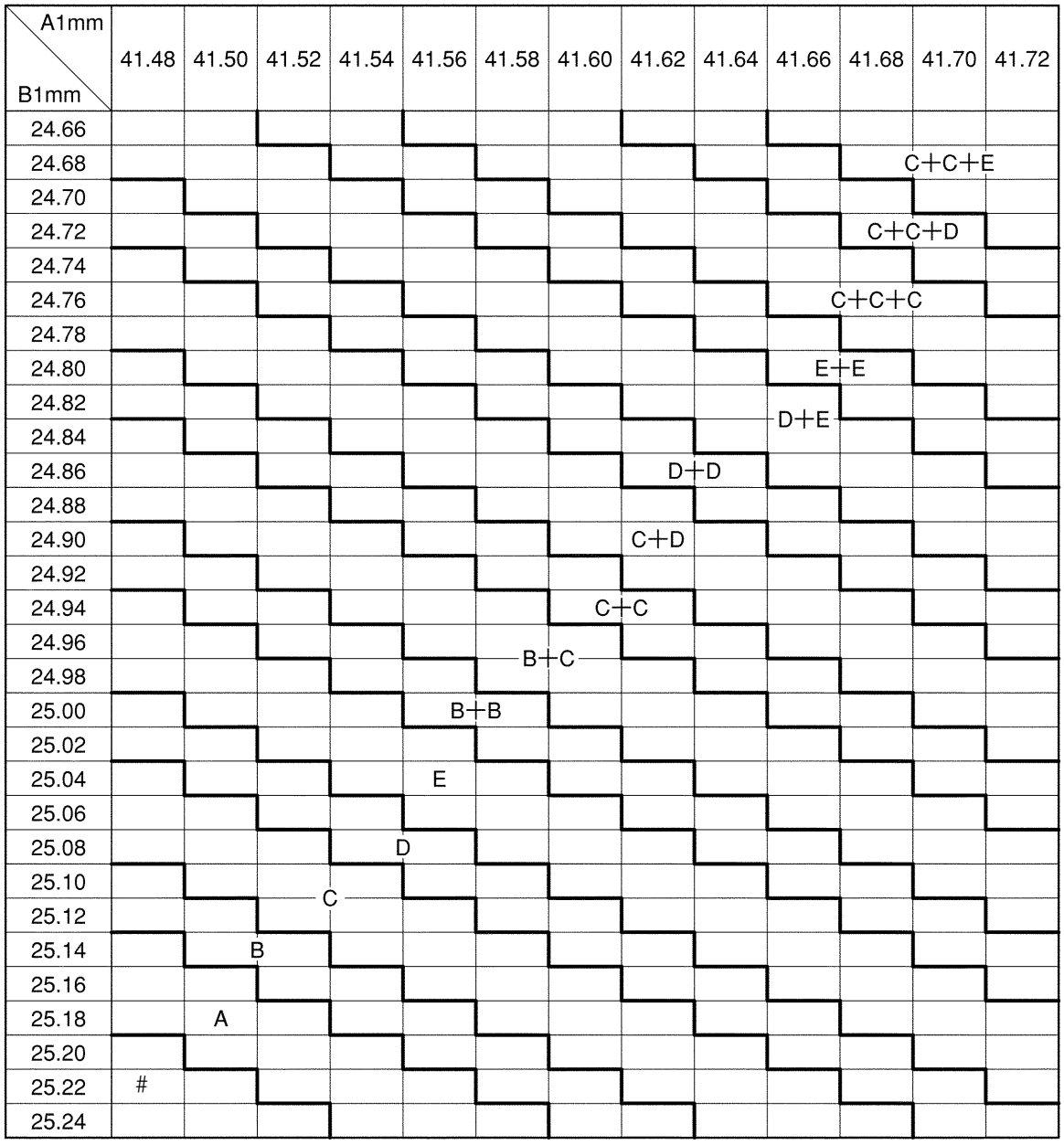

Reassemble another type shim or check the backlash after assembling A shim.

P F16254

HINT:
Three or two adjusting shims can be used together if the total of their thickness meets one of the above combinations, even if the combination does not exist in the above table.

	Adjusting shim mark and thickness mm (in.)
A	0.15 (0.0059)
B	0.20 (0.0079)
C	0.25 (0.0098)
D	0.30 (0.0118)
E	0.35 (0.0138)

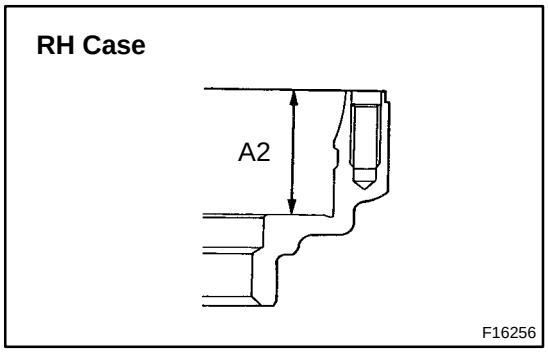

2. RH side:

SELECT ADJUSTING SHIM(S)

(a) Measure the differential case dimension ”A2”, as shown in the illustration.

(b) Install the thrust washers (face their fine side to the side gear) and clutch plates on the side gear.

HINT:

Install the new thrust washer (Mark N) instead of the thrust washers (Mark A − M) to the differential case side.

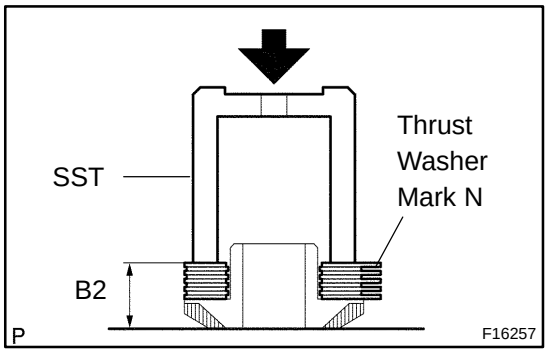

(c) Using SST to press down the thrust washers and clutch plates with about pressure of 10 kgf (22 lbf), measure dimension ”B2”, as shown in the illustration.

SST 09649−17010

(d) Referring to the following selection table on the next page, select the proper adjusting shim(s).

Adjusting shim thickness =

A2 − B2 − 16.175 mm (0.63681 in.)

RH Side

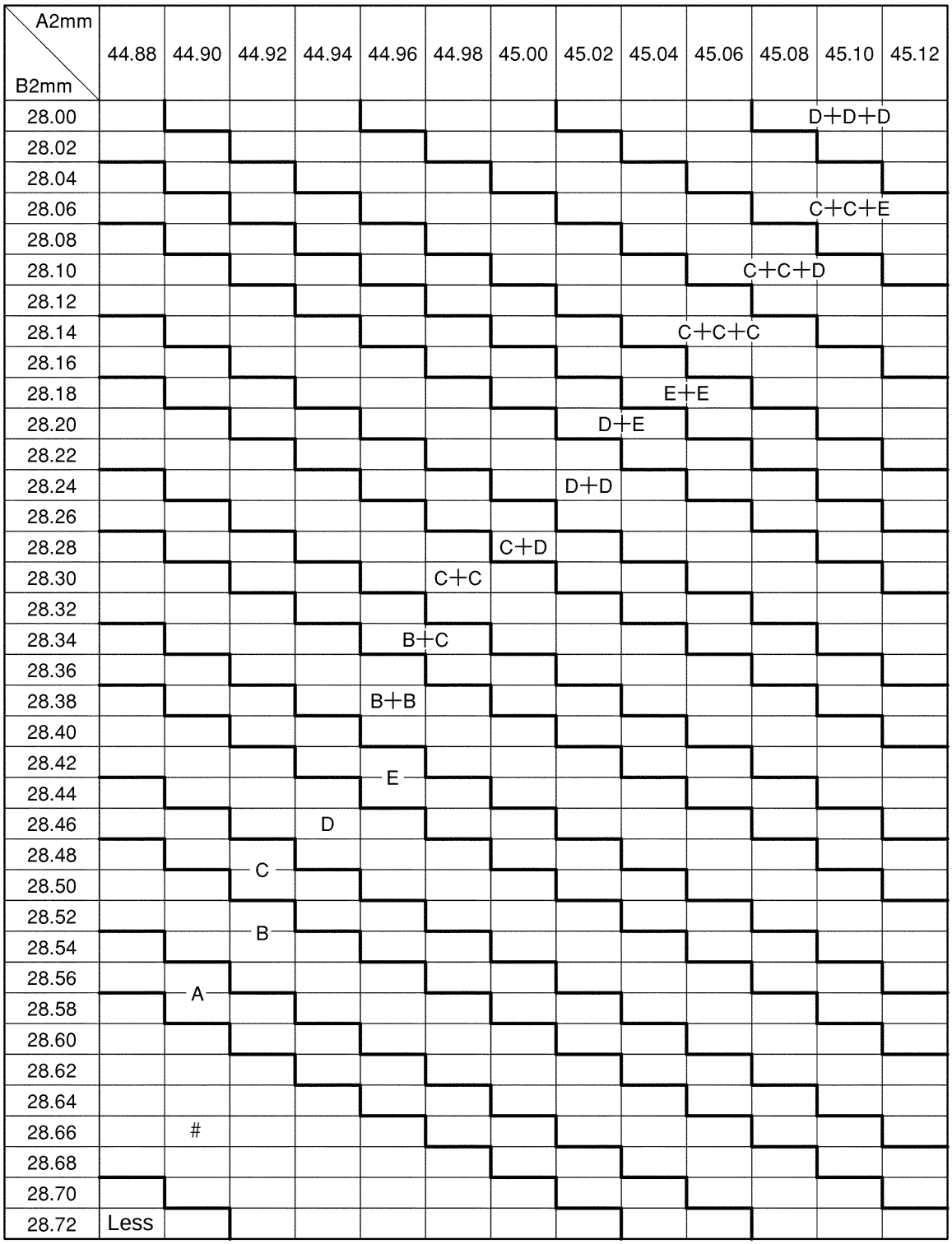

Reassemble another type shim or check the backlash after assembling A shim.

HINT:
Three or two adjusting shims can be used together if the total of their thickness meets one of the above combinations, even if the combination does not exist in the above table.

	Adjusting shim mark and thickness mm (in.)
A	0.15 (0.0059)
B	0.20 (0.0079)
C	0.25 (0.0098)
D	0.30 (0.0118)
E	0.35 (0.0138)

3. CHECK SIDE GEAR BACKLASH

(a) Install the clutch plates, thrust washers and side gear to the LH and RH differential cases.

HINT:
If necessary, install the adjusting shim(s).

(b) Install the 4 pinion gears and thrust washers to the spider.

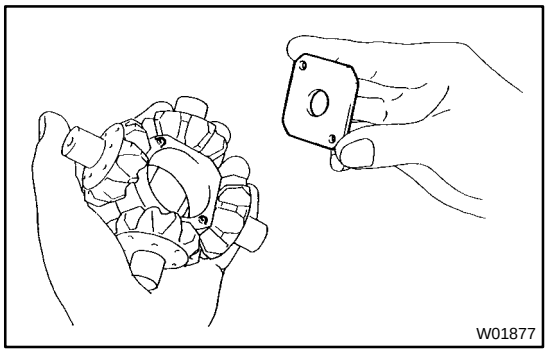
W01877

(c) Align the spring LH retainer holes with the spider knock pins and install the LH retainer.

(d) Install the pinion gear and spider to the differential LH case.

HINT:
Install the spider to the LH case tightly and do not move the spring retainer.

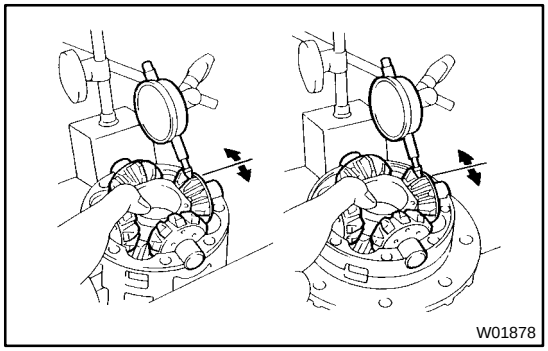
W01878

(e) Using a dial indicator, check the side gear backlash while holding the side gear and spider.
Backlash: 0.05 − 0.20 mm (0.0019 − 0.0079 in.)

HINT:
- Measure at all 4 locations.
- Measure the backlash at the LH case and at the RH case.

If the backlash is not within the specification, select the adjusting shim(s).

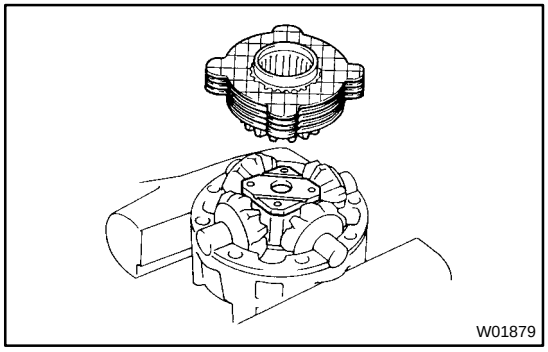
W01879

4. ASSEMBLE DIFFERENTIAL CASE

(a) Reinstall the spider and spring LH retainer to the differential LH case.

HINT:
Install the spider to the LH case tightly and do not move the spring retainer.

(b) Install the compression spring and spring RH retainer.

(c) Install the side gear, thrust washers and clutch plates.

(d) Align the matchmarks and assemble the RH and LH cases.

HINT:
Be careful not to drop the side gear and check the pinion and side gear alignment.

(e) Tighten the 8 bolts uniformly, a little at a time.
Torque: 47 N·m (480 kgf·cm, 35 ft·lbf)

5. MEASURE ROTATION TORQUE OF DIFFERENTIAL CASE

While holding one of the side gears, measure the rotation torque of the other gear.
Rotation torque (standard):
27.5 − 43.0 N·m (281 − 439 kgf·cm, 20 − 32 ft·lbf)

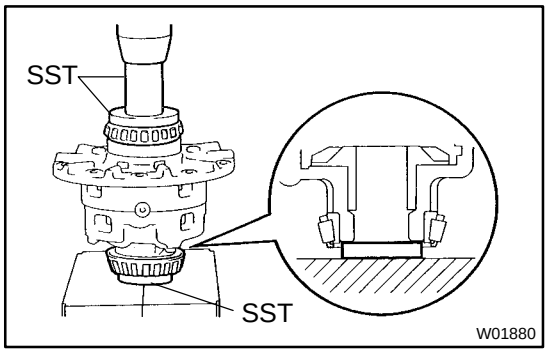

6. INSTALL SIDE BEARINGS

Using SST and a press, install the 2 side bearings into the differential case.
SST 09950−60010 (09951−00480, 09951−00640) 09950−70010 (09951−07150)

7. INSTALL RING GEAR ON DIFFERENTIAL CASE

(a) Clean the contact surfaces of the differential case and ring gear.

(b) Heat the ring gear to about 100˚C (212˚F) in boiling water.

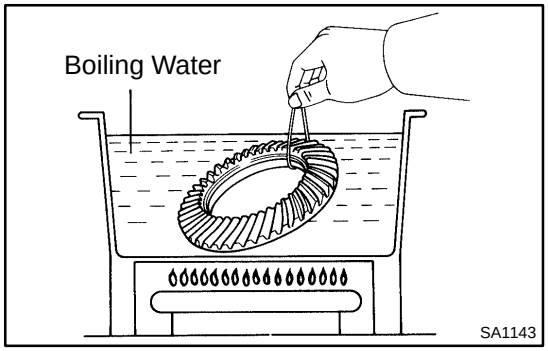

(c) Carefully take the ring gear out of the boiling water.

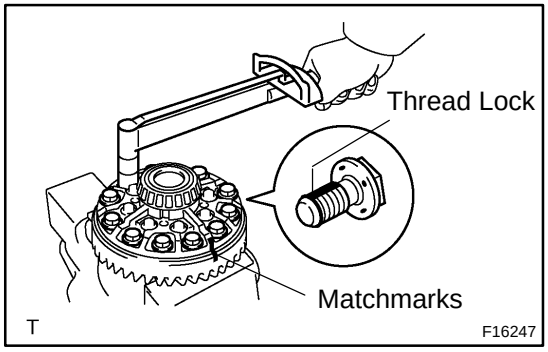

(d) After the moisture on the ring gear has completely evaporated, quickly install the ring gear to the differential case.

HINT:
Align the matchmarks on the ring gear and differential case.

(e) After the ring gear has cooled sufficiently, torque the set bolts to which thread lock has been applied.
Thread lock:
Part No. 08833−00100, THREE BOND 1360K or equivalent.
Torque: 125 N·m (1,270 kgf·cm, 92 ft·lbf)

8. INSPECT RING GEAR RUNOUT

(a) Install the differential case into the carrier and install the plate washers to where there is no play in the bearing (See step 12.).

(b) Install the bearing cap (See step 15.).

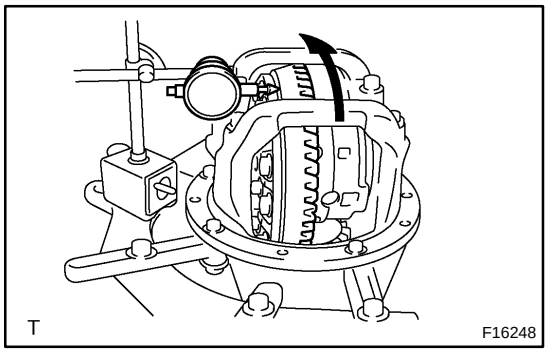

(c) Using a dial indicator, measure the runout of the ring gear.

(d) Remove the bearing caps and differential case.

Maximum runout: 0.05 mm (0.0020 in.)

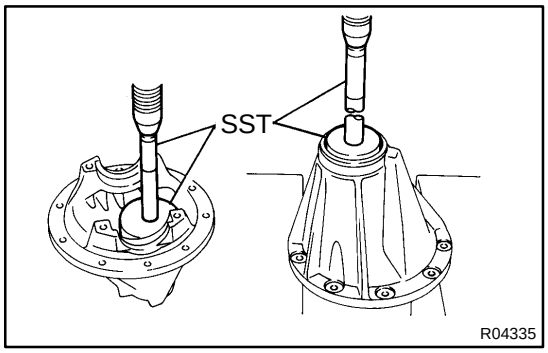

9. INSTALL DRIVE PINION BEARING OUTER RACES AND ADJUSTING WASHER

(a) Using SST and a press, install a new front bearing outer race to the carrier.

SST 09950−60020 (09951−00710), 09950−70010 (09951−07150)

(b) Using SST and a press, install a new adjusting washer and a new rear bearing outer race to the carrier.

SST 09950−60020 (09951−00910), 09950−70010 (09951−07150)

HINT:

First fit a washer with the same thickness as the washer which was removed, then after checking the tooth contact pattern, replace the washer with a different thickness if necessary.

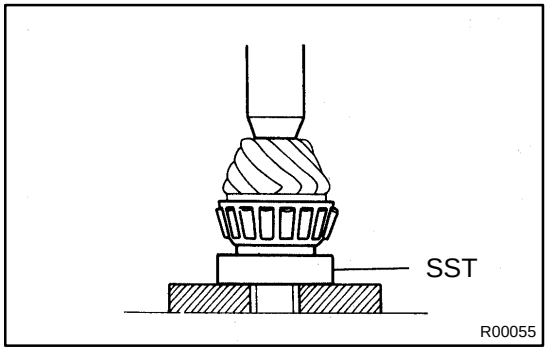

10. INSTALL DRIVE PINION REAR BEARING

Using SST and a press, install the rear bearing onto the drive pinion.

SST 09506−35010

11. TEMPORARILY ADJUST DRIVE PINION PRELOAD

(a) Install the drive pinion and front bearing.

HINT:

After adjusting the ring gear tooth contact pattern, assemble the spacer, washers and oil seal.

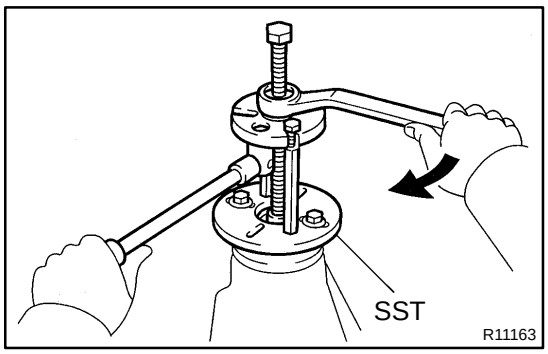

(b) Using SST, install the companion flange.
SST 09950−30012 (09951−03010, 09953−03010, 09954−03010, 09955−03030, 09956−03050)

(c) Coat the threads of the nut with hypoid gear oil.

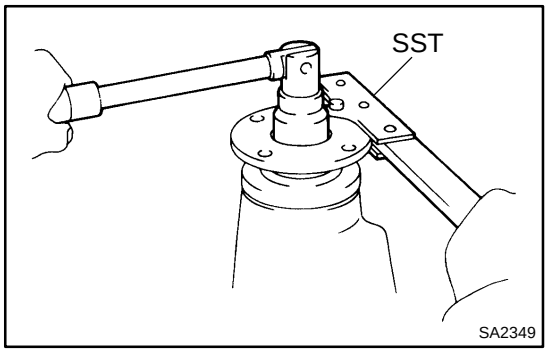

(d) Adjust the drive pinion preload by tightening the companion flange nut.

HINT:

Using SST to hold the flange, torque the nut.
SST 09330−00021

NOTICE:

As there is no spacer, tighten the nut a little at a time and be careful not to overtighten it.

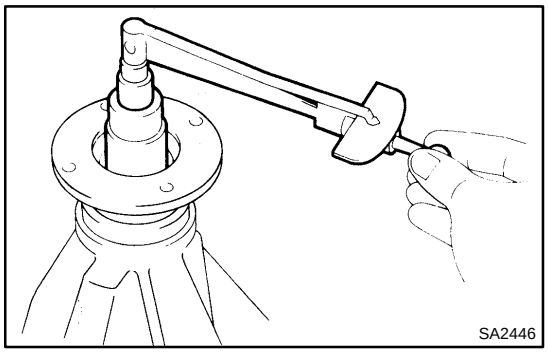

(e) Using a torque wrench, measure the preload of the drive pinion using the backlash between the drive pinion and ring gear.
Preload (at starting):
New bearing
1.3 − 1.9 N·m (13 − 19 kgf·cm, 11.4 − 16.7 in.·lbf)
Reused bearing
0.6 − 0.9 N·m (6.1 − 9.2 kgf·cm, 5.3 − 8.0 in.·lbf)

12. INSTALL DIFFERENTIAL CASE IN CARRIER

(a) Place the 2 bearing outer races on their respective bearings. Make sure the right and left races are not interchanged.

(b) Install the differential case in the carrier.

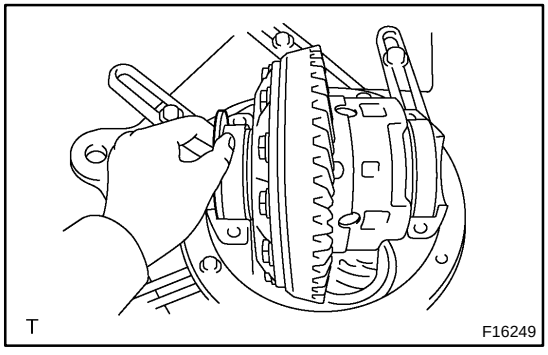

13. ADJUST RING GEAR BACKLASH

(a) Install the plate washer on the ring gear back side.

HINT:

Make sure that the ring gear has backlash.

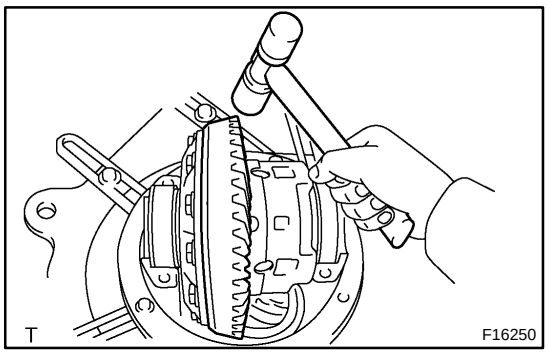

(b) Tap on the ring gear with a plastic hammer so that the washer fits to the bearing.

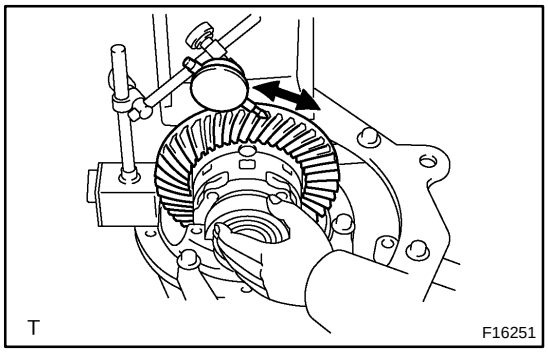

(c) Using a dial indicator, while holding the companion flange, measure the ring gear backlash.
Backlash (reference):
0.13 − 0.18 mm (0.0051 − 0.0071 in.)

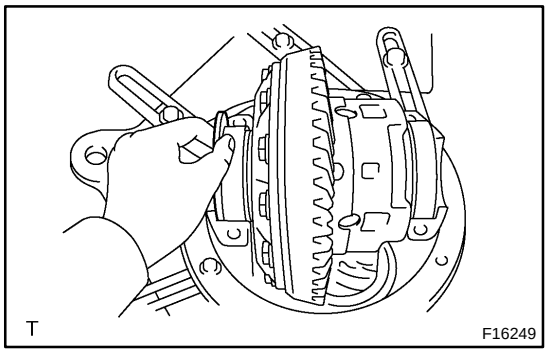

(d) Select a plate washer for back side ring gear using the backlash as a reference.

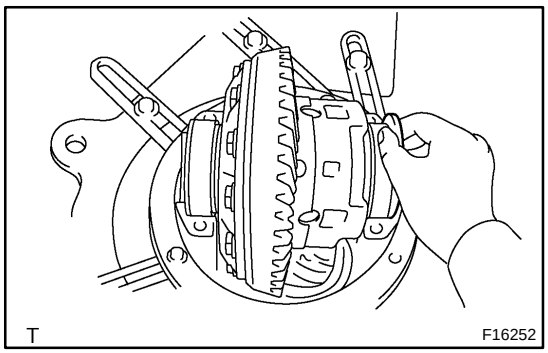

(e) Select a ring gear teeth side plate washer so that there is no clearance between the outer race and case.
(f) Remove the 2 plate washers and differential case.
(g) Install the plate washer into the ring gear back side of the carrier.

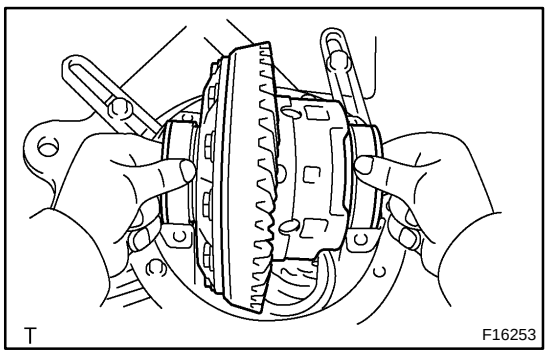

(h) Place the other plate washer onto the differential case together with the outer race, and install the differential case with the outer race into the carrier.
(i) Tap on the ring gear with a plastic hammer so that the washers fit to the bearing.

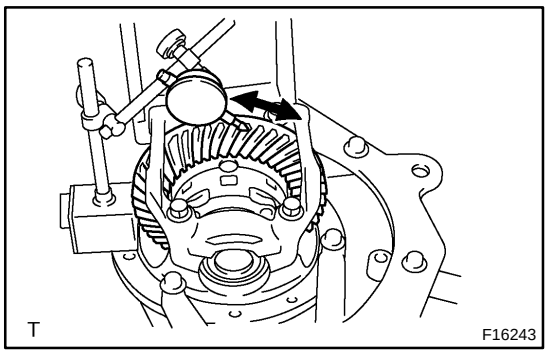

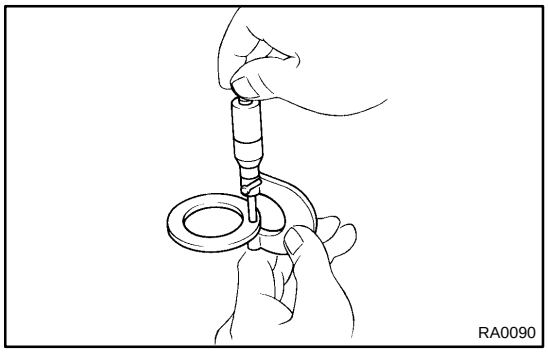

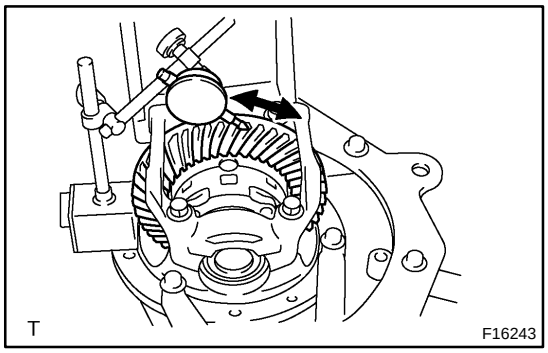

(j) Using a dial indicator, while holding the companion flange, measure the ring gear backlash.

Backlash: 0.13 − 0.18 mm (0.0051 − 0.0071 in.)

If the backlash is not within the specified value, adjust it by either increasing or decreasing the thickness of washers on both sides by an equal amount.

HINT:

There should be no clearance between the plate washer and the case.

Make sure that there is a ring gear backlash.

14. ADJUST SIDE BEARING PRELOAD

(a) Remove the ring gear teeth side plate washer and using a micrometer, measure the thickness.

(b) Using the backlash as a reference, install a new washer that is 0.06 − 0.09 mm (0.0024 − 0.0035 in.) thicker than the washer removed.

HINT:

Select a washer which can be pressed in 2/3 of the way with your finger.

(c) Using a plastic hammer, install the plate washer.

(d) Recheck the ring gear backlash.

Backlash: 0.13 − 0.18 mm (0.0051 − 0.0071 in.)

If the backlash is not within the specified value, adjust it by either increasing or decreasing the thickness of washers on both sides by an equal amount.

HINT:

The backlash will change by about 0.02 mm (0.0008 in.) corresponding to 0.03 mm (0.0012 in.) change in the plate washer.

Washer thickness:

Thickness		Thickness		Thickness	
Mark	mm (in.)	Mark	mm (in.)	Mark	mm (in.)
58	2.58 (0.1015)	90	2.90 (0.1142)	22	3.22 (0.1268)
60	2.60 (0.1024)	92	2.92 (0.1150)	24	3.24 (0.1276)
62	2.62 (0.1031)	94	2.94 (0.1157)	26	3.26 (0.1283)
64	2.64 (0.1039)	96	2.96 (0.1165)	28	3.28 (0.1291)
66	2.66 (0.1047)	98	2.98 (0.1173)	30	3.30 (0.1299)
68	2.68 (0.1055)	00	3.00 (0.1181)	32	3.32 (0.1307)
70	2.70 (0.1063)	02	3.02 (0.1189)	34	3.34 (0.1315)
72	2.72 (0.1071)	04	3.04 (0.1197)	36	3.36 (0.1323)
74	2.74 (0.1079)	06	3.06 (0.1205)	38	3.38 (0.1331)
76	2.76 (0.1087)	08	3.08 (0.1213)	40	3.40 (0.1339)
78	2.78 (0.1094)	10	3.10 (0.1220)	42	3.42 (0.1346)
80	2.80 (0.1102)	12	3.12 (0.1228)	44	3.44 (0.1354)
82	2.82 (0.1110)	14	3.14 (0.1236)	46	3.46 (0.1362)
84	2.84 (0.1118)	16	3.16 (0.1244)	48	3.48 (0.1370)
86	2.86 (0.1126)	18	3.18 (0.1252)	−	
88	2.88 (0.1134)	20	3.20 (0.1260)	−	

15. INSTALL BEARING CAP

(a) Align the matchmarks on the cap and carrier.

(b) Install and torque the 4 bolts.

Torque: 113 N·m (1,150 kgf·cm, 83 ft·lbf)

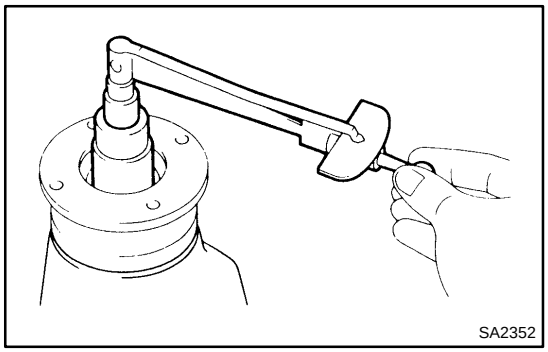

16. MEASURE TOTAL PRELOAD

Using a torque wrench, measure the total preload with the teeth of the drive pinion and ring gear in contact.

Total preload (at starting):

Drive pinion preload plus 0.4 − 0.6 N·m (4 − 6 kgf·cm, 3.5 − 5.2 in.·lbf)

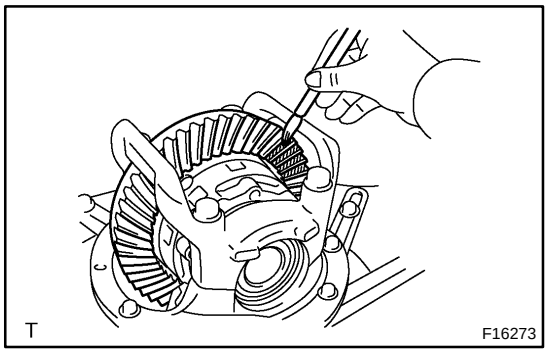

17. INSPECT TOOTH CONTACT BETWEEN RING GEAR AND DRIVE PINION

(a) Coat 3 or 4 teeth at three different positions on the ring gear with red lead primer.

(b) Hold the companion flange firmly and rotate the ring gear in both directions.

(c) Inspect the teeth pattern.

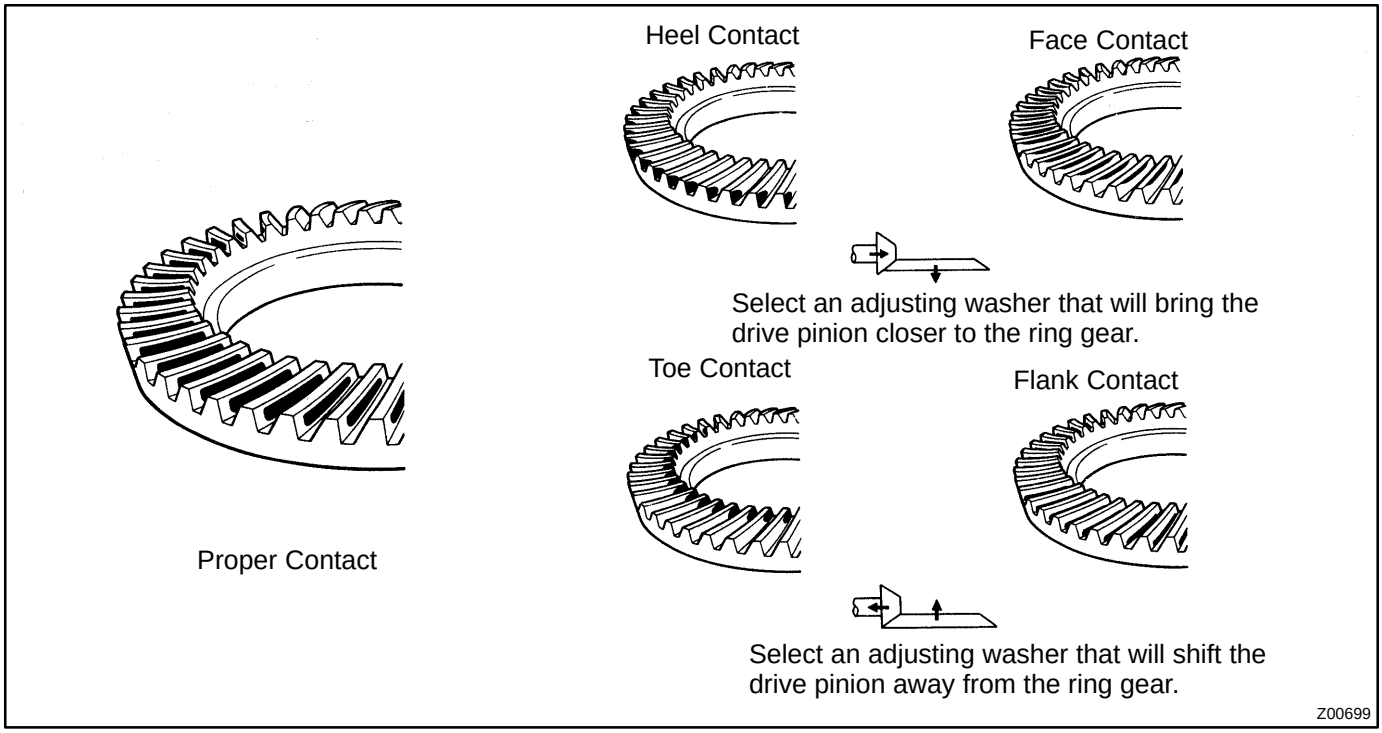

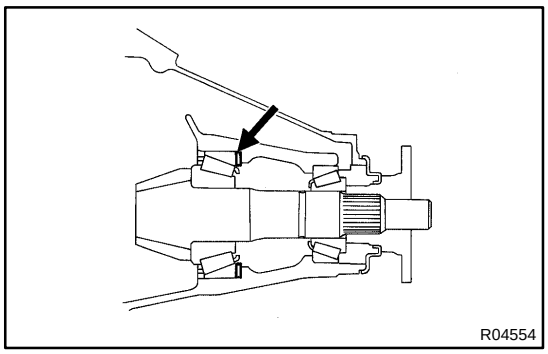

If the teeth are not contacting properly, use the following table to select a proper washer for correction.

Washer thickness:

Mark	Thickness mm (in.)	Mark	Thickness mm (in.)	Mark	Thickness mm (in.)
87	1.87 (0.0736)	01	2.01 (0.0791)	15	2.15 (0.0846)
88	1.88 (0.0740)	02	2.02 (0.0795)	16	2.16 (0.0850)
89	1.89 (0.0744)	03	2.03 (0.0799)	17	2.17 (0.0854)
90	1.90 (0.0748)	04	2.04 (0.0803)	18	2.18 (0.0858)
91	1.91 (0.0752)	05	2.05 (0.0807)	19	2.19 (0.0862)
92	1.92 (0.0756)	06	2.06 (0.0811)	20	2.20 (0.0866)
93	1.93 (0.0760)	07	2.07 (0.0815)	21	2.21 (0.0870)
94	1.94 (0.0764)	08	2.08 (0.0819)	22	2.22 (0.0874)
95	1.95 (0.0768)	09	2.09 (0.0823)	23	2.23 (0.0878)
96	1.96 (0.0772)	10	2.10 (0.0827)	24	2.24 (0.0882)
97	1.97 (0.0776)	11	2.11 (0.0831)	25	2.25 (0.0886)
98	1.98 (0.0780)	12	2.12 (0.0835)	26	2.26 (0.0890)
99	1.99 (0.0783)	13	2.13 (0.0839)	27	2.27 (0.0894)
00	2.00 (0.0787)	14	2.14 (0.0843)	28	2.28 (0.0898)

18. REMOVE COMPANION FLANGE (See page SA−126)

19. REMOVE FRONT BEARING (See page SA−126)

20. INSTALL NEW BEARING SPACER, 2 WASHERS AND FRONT BEARING

(a) Install a new bearing spacer and 2 washers, and place the front bearing.

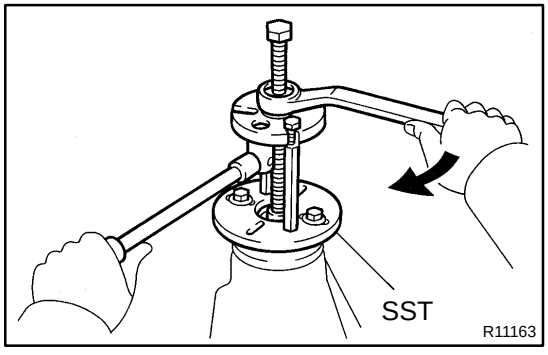

(b) Using SST and the companion flange, install the front bearing then remove the companion flange.

SST 09950−30012 (09951−03010, 09953−03010, 09954−03010, 09955−03030, 09956−03050)

21. INSTALL NEW OIL SEAL

(a) Coat a new oil seal lip with MP grease.

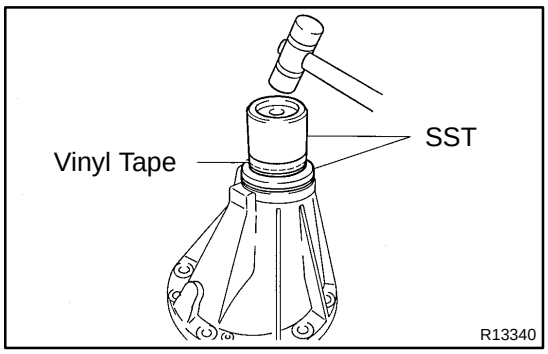

(b) Using SST and a plastic hammer, install the oil seal until its surface is flush with the differential carrier end.
SST 09316−12010, 09649−17010

HINT:
Connect 2 SST with vinyl tape.

22. INSTALL COMPANION FLANGE

(a) Place the companion flange.

(b) Coat the threads of a new nut with hypoid gear oil.

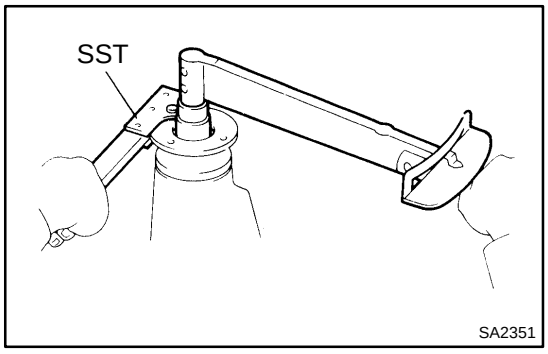

(c) Using SST to hold the flange, torque the nut.
SST 09330−00021
Torque: 147 N·m (1,500 kgf·cm, 109 ft·lbf)

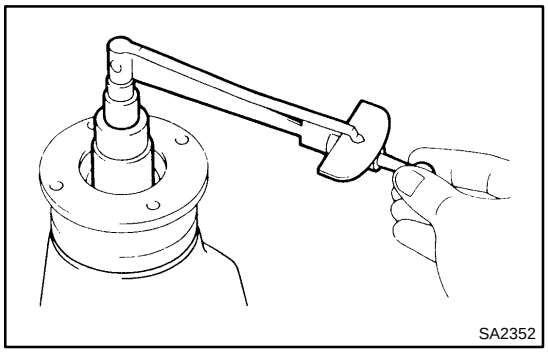

23. ADJUST DRIVE PINION PRELOAD

Using a torque wrench, measure the preload of the drive pinion using the backlash between the drive pinion and ring gear.

Preload (at starting):
New bearing
1.3 − 1.9 N·m (13 − 19 kgf·cm, 11.4 − 16.7 in.·lbf)
Reused bearing
0.6 − 0.9 N·m (6.1 − 9.2 kgf·cm, 5.3 − 8.0 in.·lbf)

If the preload is greater than the specified value, replace the bearing spacer.

If the preload is less than the specified value, retighten the nut with a force of 13 N·m (130 kgf·cm, 9 ft·lbf) until the specified preload is reached.

Torque: 451 N·m (4,600 kgf·cm, 333 ft·lbf) or less

If the maximum torque is exceeded while retightening the nut, replace the bearing spacer and repeat the preload procedure. Do not loosen the pinion nut to reduce the preload.

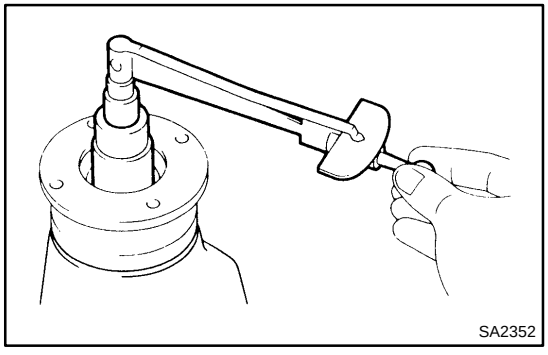

24. CHECK TOTAL PRELOAD

Using a torque wrench, measure the total preload with the teeth of the drive pinion and ring gear in contact.

Total preload (at starting):
Drive pinion preload plus 0.4 − 0.6 N·m (4 − 6 kgf·cm, 3.5 − 5.2 in.·lbf)

25. CHECK RING GEAR BACKLASH

Using a dial indicator, measure the ring gear backlash.

Backlash: 0.13 − 0.18 mm (0.0051 − 0.0071 in.)

26. RECHECK TOOTH CONTACT BETWEEN RING GEAR AND DRIVE PINION (See step 17.)

27. CHECK COMPANION FLANGE RUNOUT (See page SA−126)

28. STAKE DRIVE PINION NUT

SA28N−02

REMOVAL

1. DRAIN HYPOID GEAR OIL

2. REMOVE REAR AXLE SHAFTS (See page SA−93)

3. DISCONNECT REAR PROPELLER SHAFT

2WD: See page PR−3

4WD: See page PR−10

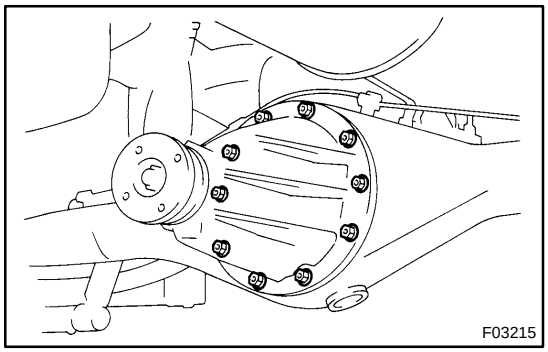

4. REMOVE DIFFERENTIAL CARRIER ASSEMBLY

(a) Remove the 10 nuts, washers and differential carrier assembly.

NOTICE:

Be careful not to damage the installation surface.

(b) Remove the gasket.

SA162−07

REPLACEMENT

REPLACE COMPANION FLANGE DUST DEFLECTOR

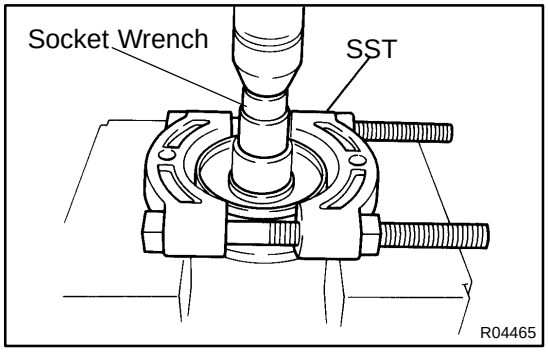

(a) Using SST, a socket wrench and a press, remove the dust deflector.
SST 09950−00020

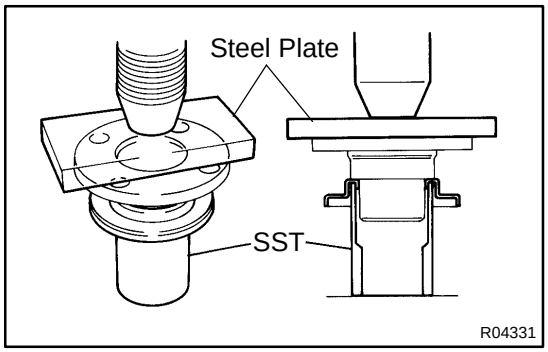

(b) Using SST, a press and steel plate, install a new dust deflector.
SST 09523−36010

REAR DIFFERENTIAL FRONT OIL SEAL

COMPONENTS

SA0BD−08

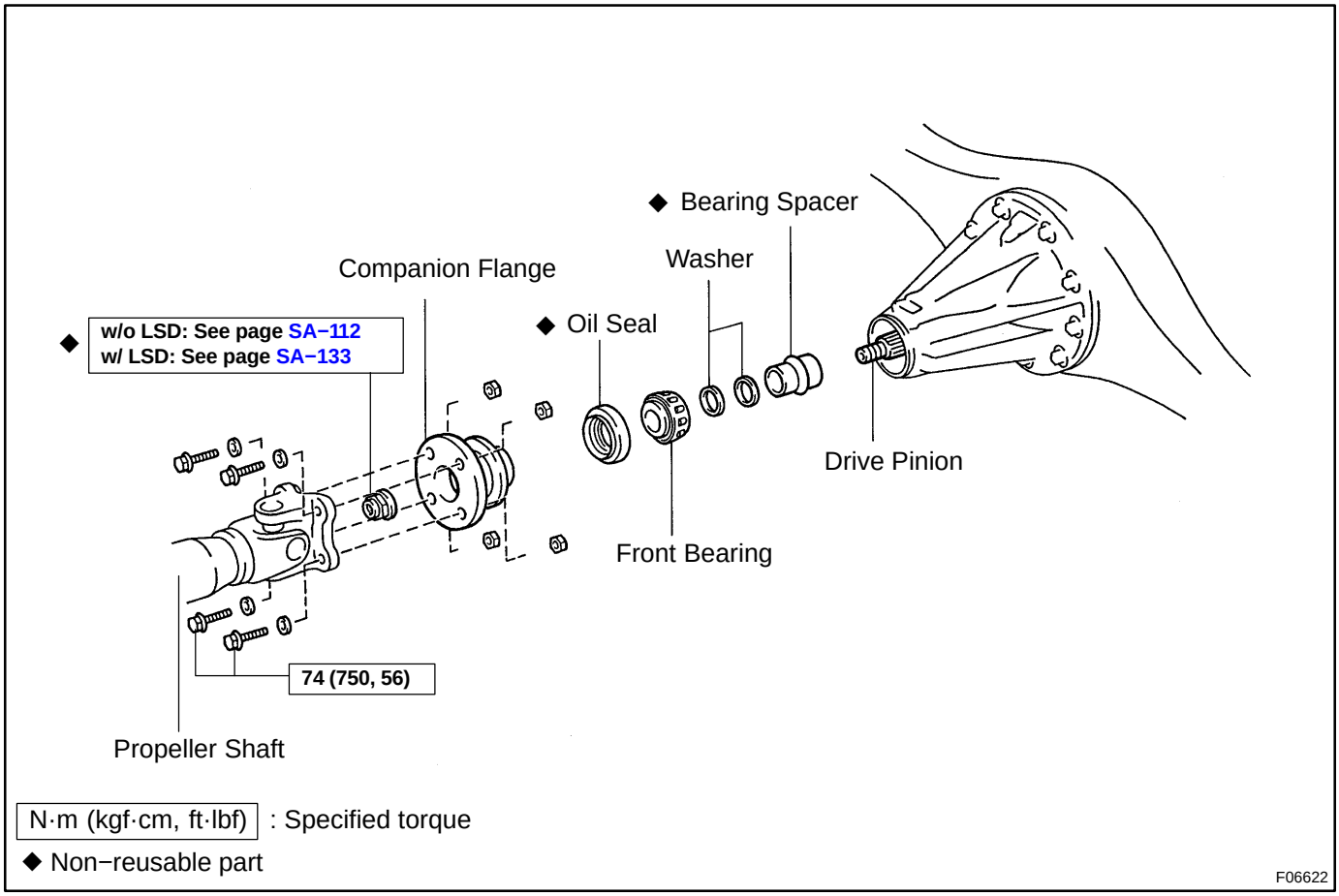

N·m (kgf·cm, ft·lbf) : Specified torque

◆ Non−reusable part

F06622

SA1KD−05

REPLACEMENT

1. DRAIN DIFFERENTIAL OIL

2. DISCONNECT REAR PROPELLER SHAFT

2WD: See page PR−3

4WD: See page PR−10

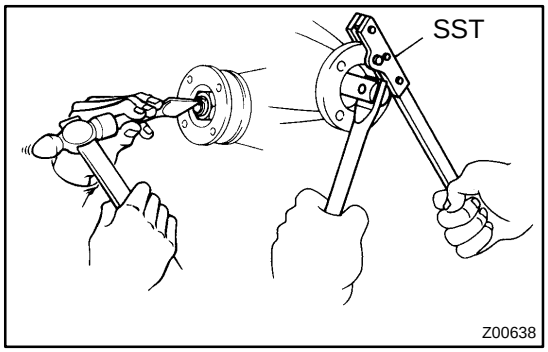

3. REMOVE COMPANION FLANGE

(a) Using a chisel and hammer, loosen the staked part of the nut.

(b) Using SST to hold the flange, remove the nut.

SST 09330−00021

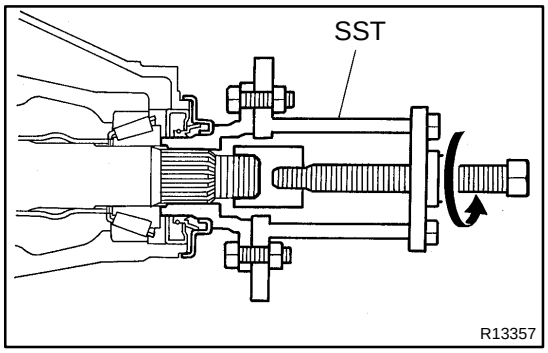

(c) Using SST, remove the companion flange.

SST 09950−30012 (09951−03010, 09953−03010, 09954−03010, 09955−03030, 09956−03050)

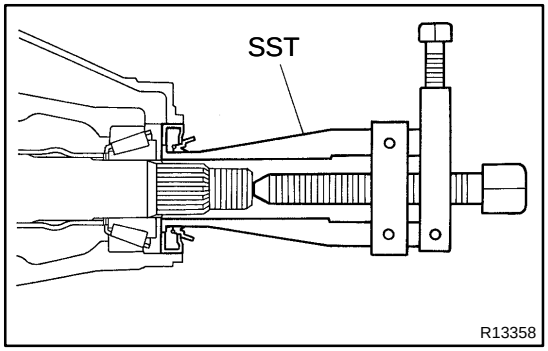

4. REMOVE OIL SEAL

Using SST, remove the oil seal.

SST 09308−10010

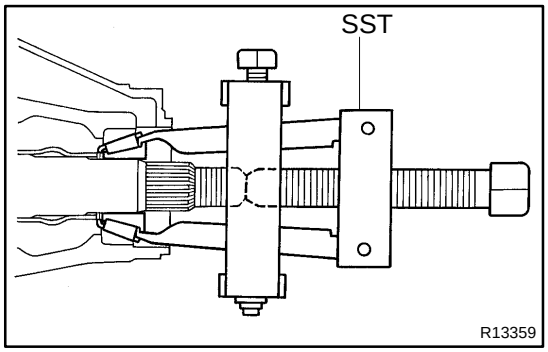

5. REMOVE FRONT BEARING

Using SST, remove the front bearing from the drive pinion.

SST 09556−22010

6. REMOVE BEARING SPACER

(a) Remove the 2 washers.

(b) Remove the bearing spacer.

7. INSTALL NEW BEARING SPACER

(a) Install a new bearing spacer.

(b) Install the 2 washers.

8. INSTALL FRONT BEARING

(a) Place the front bearing.

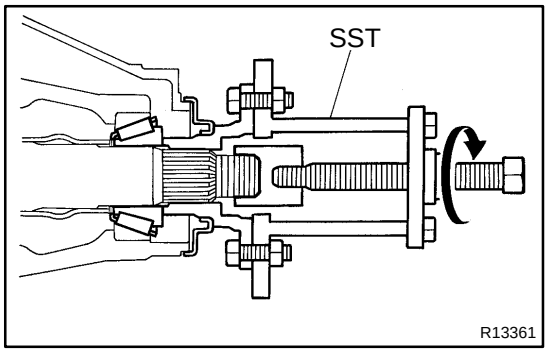

(b) Using SST and the companion flange, install the front bearing then remove the companion flange.
SST 09950−30012 (09951−03010, 09953−03010, 09954−03010, 09955−03030, 09956−03050)

9. INSTALL NEW OIL SEAL

(a) Coat a new oil seal lip with MP grease.

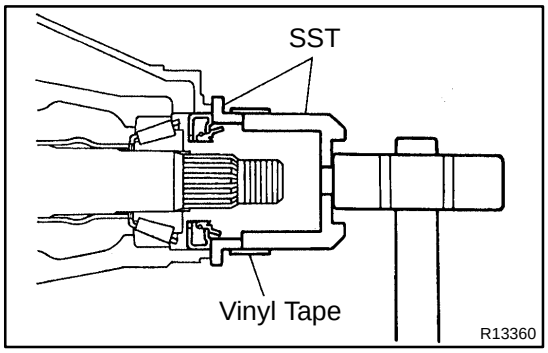

(b) Using SST and a plastic hammer, install the oil seal until its surface is flush with the differential carrier end.
SST 09316−12010, 09649−17010

HINT:
Connect the 2 SST with vinyl tape.

10. INSTALL COMPANION FLANGE

(a) Place the companion flange on the drive pinion.

(b) Coat the threads of a new nut with hypoid gear oil.

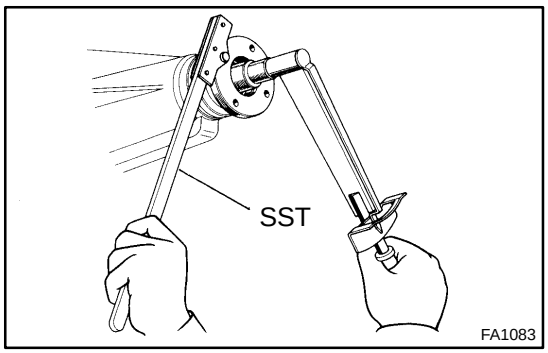

(c) Using SST to hold the flange, torque the nut.
SST 09330−00021
Torque: 147 N·m (1,500 kgf·cm, 109 ft·lbf)

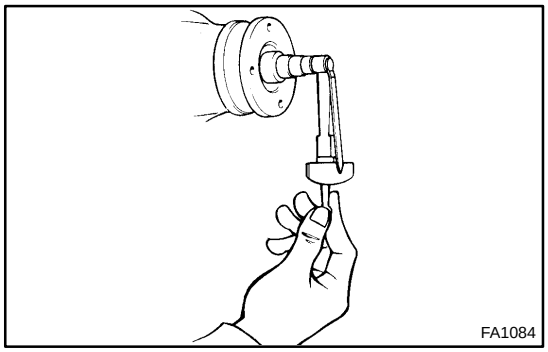

11. ADJUST DRIVE PINION PRELOAD
w/o LSD: See page SA−112
w/ LSD: See page SA−133

12. STAKE DRIVE PINION NUT

13. CONNECT REAR PROPELLER SHAFT
2WD: See page PR−8
4WD: See page PR−15

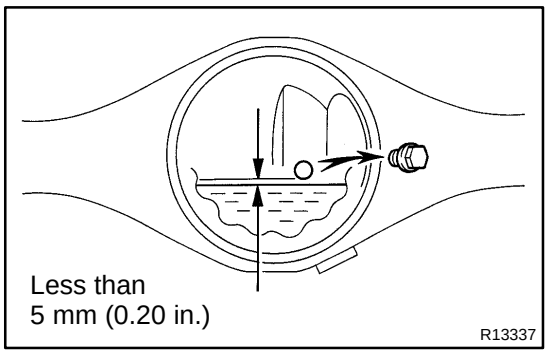

14. FILL DIFFERENTIAL WITH HYPOID GEAR OIL

Torque: 49 N·m (500 kgf·cm, 39 ft·lbf)

Oil type:

w/o LSD	Hypoid gear oil API GL−5
w/ LSD	Hypoid gear oil for LSD API GL−5

Recommended oil viscosity:

Standard type	SAE 75W − 140
LSD type	Above − 18 °C (0 °F) SAE 90 Below − 18 °C (0 °F) SAE 80W or 80W − 90

Capacity:

Differential type		Capacity
Standard type	2WD	
	Standard Cab and Access Cab:	3.80 liters (4.02 US qts., 3.34 lmp. qts.)
	Double Cab	4.00 liters (4.23 US qts., 3.52 lmp. qts.)
	4WD	
	Standard Cab and Access Cab:	3.50 liters (3.70 US qts., 3.08 lmp. qts.)
	Double Cab	4.00 liters (4.23 US qts., 3.52 lmp. qts.)
LSD type	2WD	
	Standard Cab and Access Cab:	3.15 liters (3.33 US qts., 2.77 lmp. qts.)
	Double Cab	3.35 liters (3.54 US qts., 2.95 lmp. qts.)
	4WD	
	Standard Cab and Access Cab:	2.85 liters (3.01 US qts., 2.51 lmp. qts.)
	Double Cab	3.35 liters (3.54 US qts., 2.95 lmp. qts.)

REAR LEAF SPRING

COMPONENTS

SA0C2−08

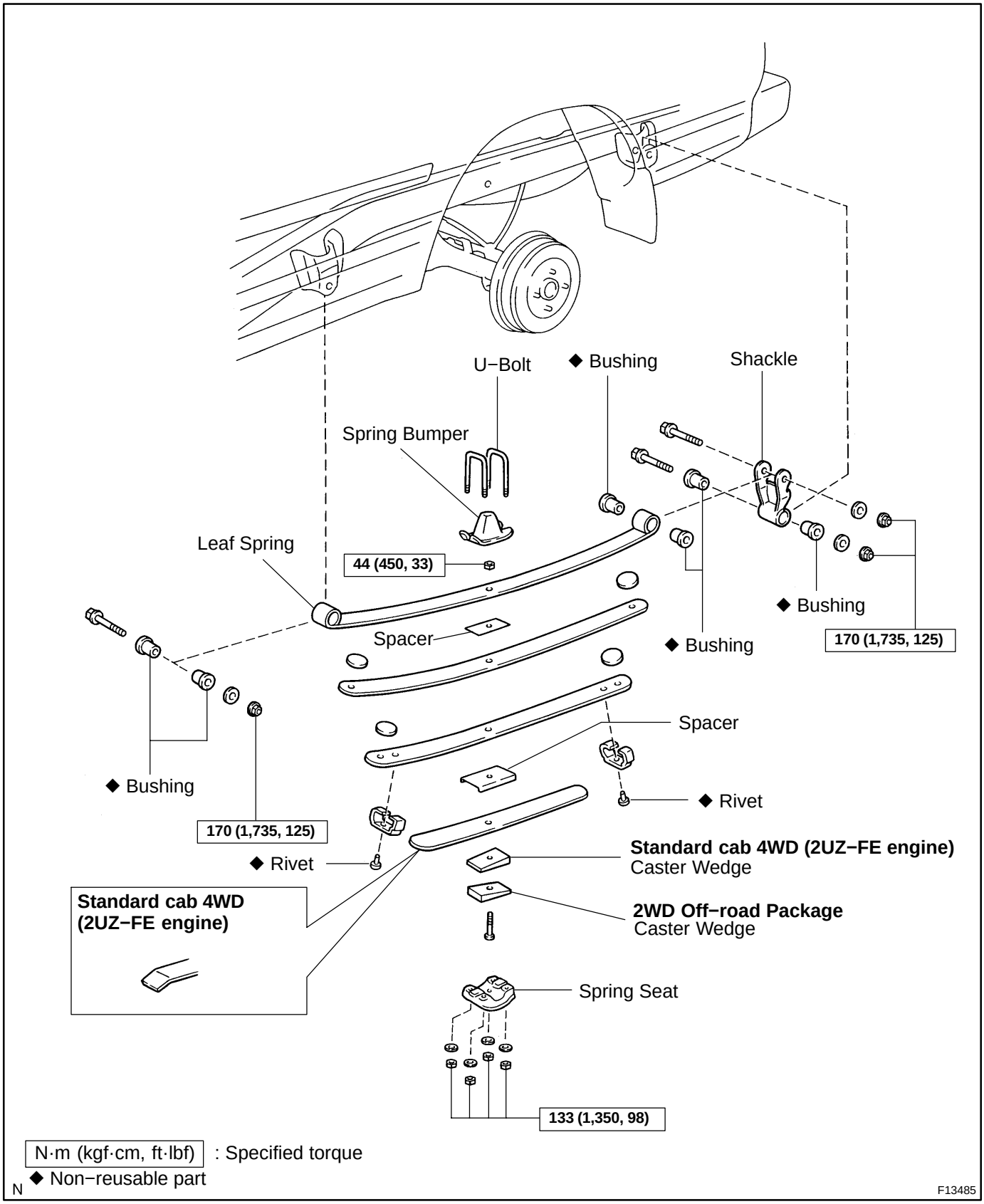

SA1KH−02

INSTALLATION

1. INSTALL LEAF SPRING

Install the shackle and leaf spring with the 3 bolts, washers and nuts.

Torque: 170 N·m (1,735 kgf·cm, 125 ft·lbf)

HINT:

After stabilizing the suspension, torque the nuts.

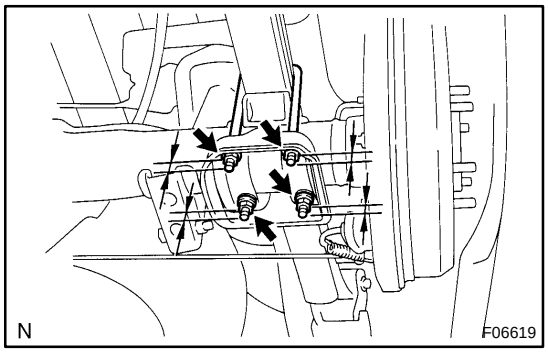

2. INSTALL U−BOLTS

Install the spring bumper, spring seat and 2 U−bolts with the 4 washers and nuts.

Torque: 133 N·m (1,350 kgf·cm, 98 ft·lbf)

HINT:

Tighten the U−bolts so that the lengths of all the U−bolts under the spring seat are the same.

3. INSTALL REAR WHEEL

Torque: 110 N·m (1,150 kgf·cm, 83 ft·lbf)

4. REMOVE SAFETY STANDS

SA0C3−09

REMOVAL

1. SUPPORT BODY WITH SAFETY STANDS

(a) Jack up and support the body on safety stands.

(b) Lower the axle housing until the leaf spring tension is free, and keep it at this position.

2. REMOVE REAR WHEEL

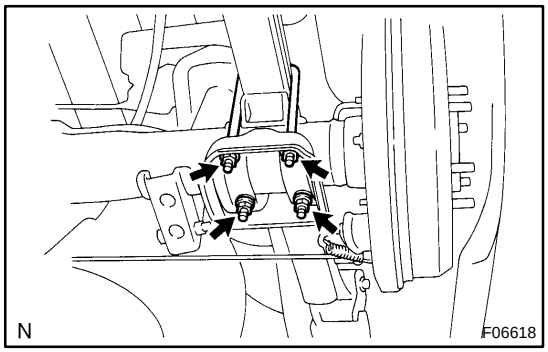

3. REMOVE U−BOLTS

(a) Remove the 4 U−bolt mounting nuts and washers.

(b) Remove the spring seat and 2 U−bolts.

(c) Remove the spring bumper.

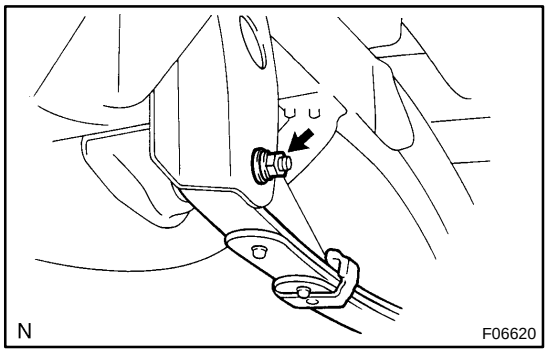

4. REMOVE LEAF SPRING

(a) Remove the nut, washer and bolt.

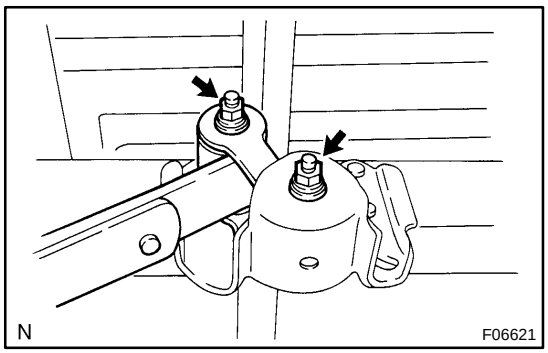

(b) Remove the 2 nuts, washers, bolts, shackle and leaf spring.

SA0C4−04

REPLACEMENT

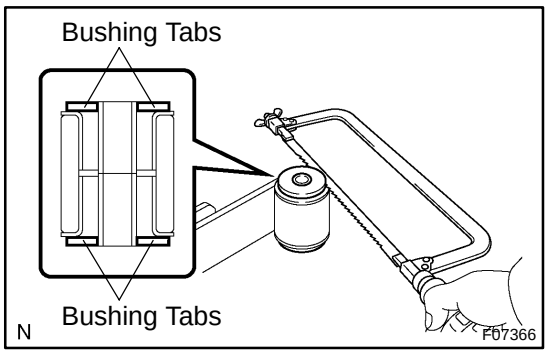

1. REPLACE BUSHINGS

(a) Using a saw, cut the both bushing tabs as shown in the illustration.

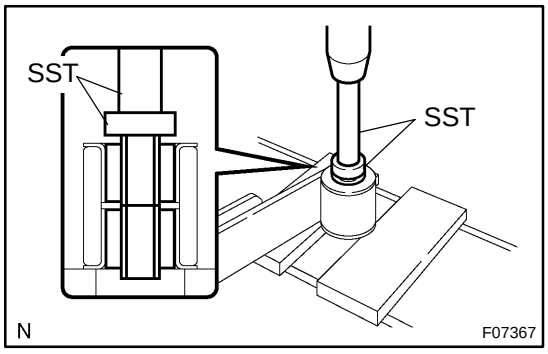

(b) Using SST and a press, press out the both inner tubes and rubber parts of the bushings.
SST 09950−60010 (09951−00350)
09950−70010 (09951−07150)

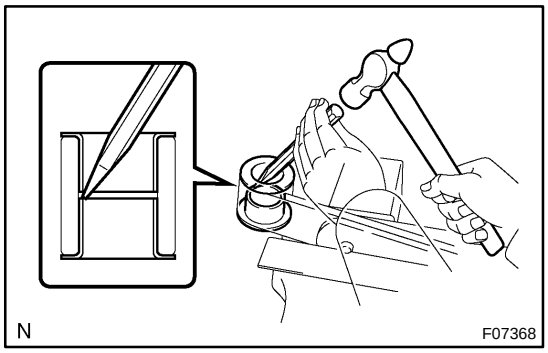

(c) Using a chisel and hammer, tap out the outer tubes.

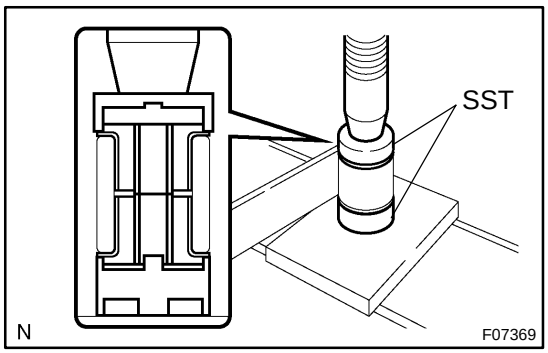

(d) Using SST and a press, install 2 new bushings.
SST 09710−28012 (09710−07062),
09710−30041 (09710−03211)

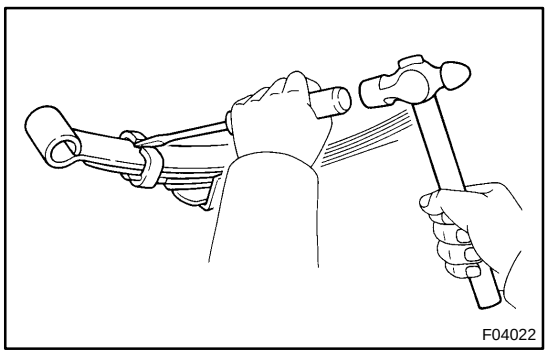

2. REPLACE LEAF SPRING

(a) Bend to open the spring clips.
Using a chisel and hammer, pry up the 2 spring clips.

(b) Remove the center bolt and nut.
Hold the spring near the spring center bolt in a vise and remove the center bolt and nut.

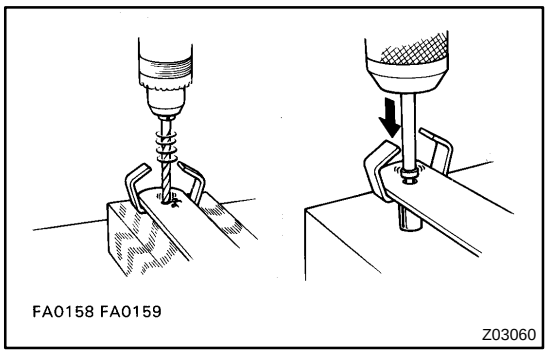

(c) Replace the spring clip.
(1) Drill off the head of the rivet and drive it out.
(2) Install a new rivet into the holes of the leaf spring and clip. Then rivet with a press.

(d) Install the spring center bolt and nut.
(1) Align the leaf spring holes and secure the leaves with a vise.
(2) Install the spring center bolt and nut.
Torque: 44 N·m (450 kgf·cm, 33 ft·lbf)

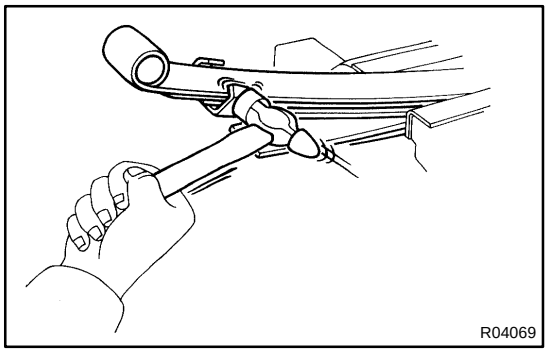

(e) Bend the spring clips.
Using a hammer, bend the spring clips into the position.

REAR SHOCK ABSORBER

SA0BX−10

COMPONENTS

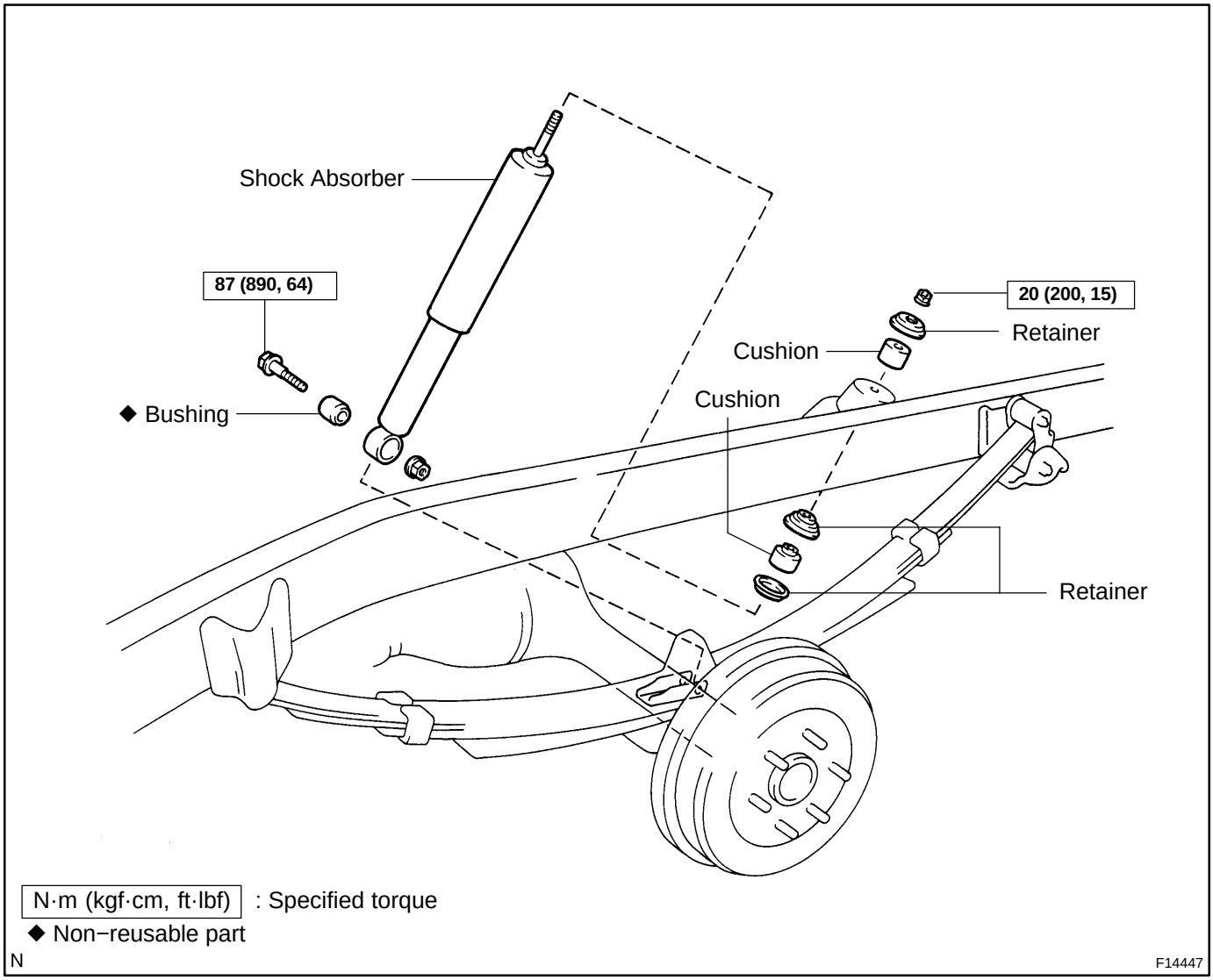

SA0C0−06

DISPOSAL

1. FULLY EXTEND SHOCK ABSORBER ROD

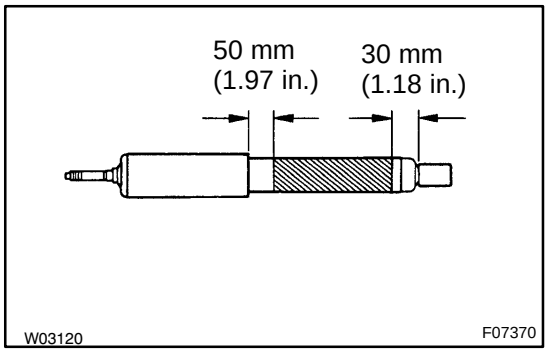

2. DRILL HOLE TO REMOVE GAS FROM CYLINDER

Using a drill, make a hole in the cylinder, as shown in the illustration to discharge the gas inside.

CAUTION:

The discharged gas is harmless, but be careful of chips which may fly out when drilling.

SA0BZ−06

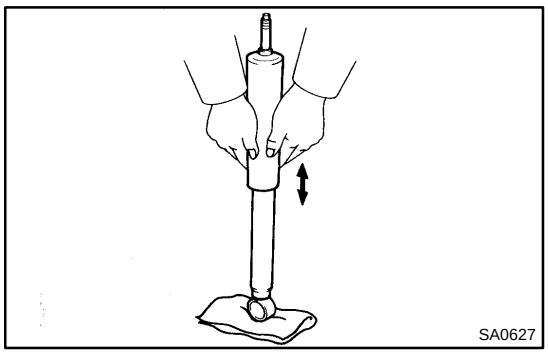

INSPECTION

INSPECT SHOCK ABSORBER

Compress and extend the shock absorber rod and check that there is no abnormal resistance or unusual operation sounds. If there is any abnormality, replace the shock absorber with a new one.

NOTICE:

When disposing of the shock absorber, see DISPOSAL on page SA−151.

SA0C1−05

INSTALLATION

1. INSTALL REAR SHOCK ABSORBER

(a) Install the 2 retainers and cushion to the shock absorber.

(b) Install the shock absorber, cushion and retainer with the nut.
Torque: 20 N·m (200 kgf·cm, 15 ft·lbf)

(c) Install the lower side of the shock absorber with the bolt and nut.
Torque: 87 N·m (890 kgf·cm, 64 ft·lbf)

2. INSTALL REAR WHEEL
Torque: 110 N·m (1,150 kgf·cm, 83 ft·lbf)

3. REMOVE SAFETY STANDS

SA1KF−02

REMOVAL

1. SUPPORT BODY WITH SAFETY STANDS

(a) Jack up and support the body on safety stands.

(b) Lower the axle housing until the leaf spring tension is free, and keep it at this position.

2. REMOVE REAR WHEEL

3. REMOVE REAR SHOCK ABSORBER

(a) Remove the bolt and nut on the lower side of the shock absorber.

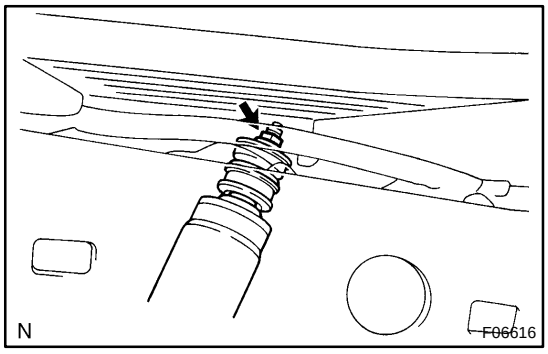

(b) While holding the piston rod, remove the nut, retainer, cushion and shock absorber.

(c) Remove the 2 retainers and cushion from the shock absorber.

SA1KG−02

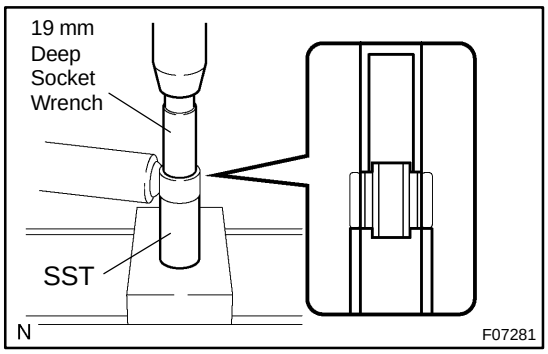

REPLACEMENT

REPLACE BUSHING

(a) Using SST, 19 mm deep socket wrench and a press, remove the bushing.
SST 09632−36010

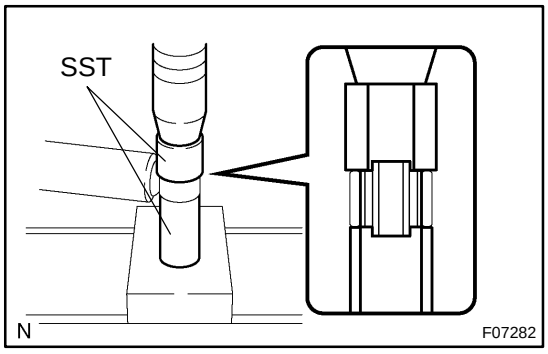

(b) Using SST and a press, install a new bushing.
SST 09630−24014 (09620−24041), 09632−36010

REAR STABILIZER BAR (Sport Suspension Package)

SA2BC−02

COMPONENTS

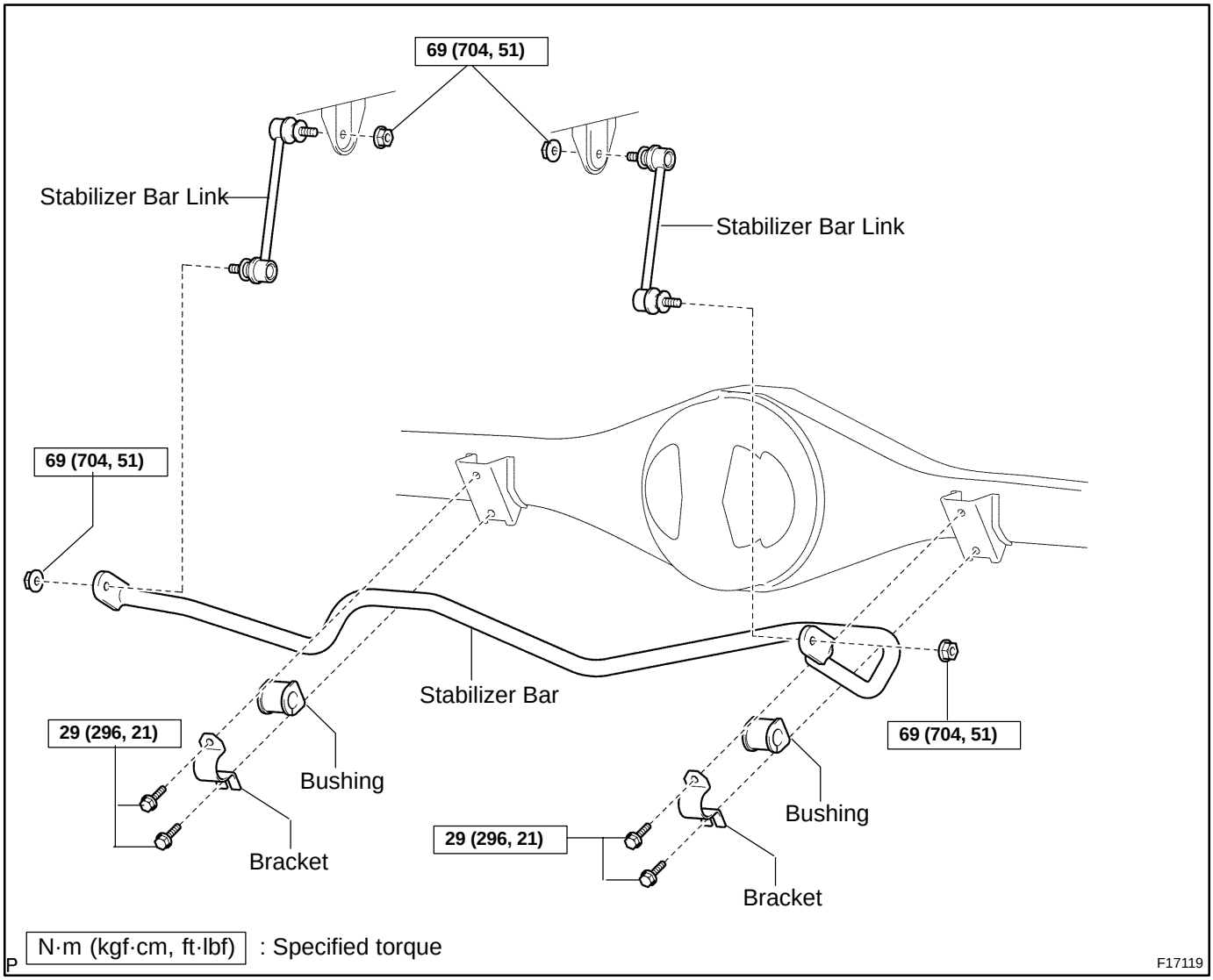

SA2BE−02

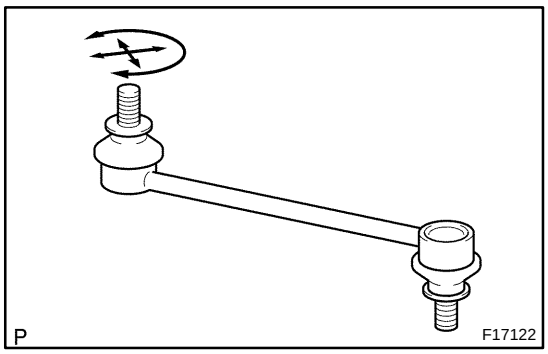

INSPECTION

INSPECT STABILIZER BAR LINK

Rotate the ball joint stud in all directions.

If it does not move smoothly and freely, replace the stabilizer link.

SA2BF−01

INSTALLATION

Installation is in the reverse order of removal (See page SA−160).

SA2BD−02

REMOVAL

1. REMOVE REAR WHEELS
Torque: 110 N·m (1,150 kgf·cm, 83 ft·lbf)

2. SUPPORT REAR AXLE HOUSING WITH JACK

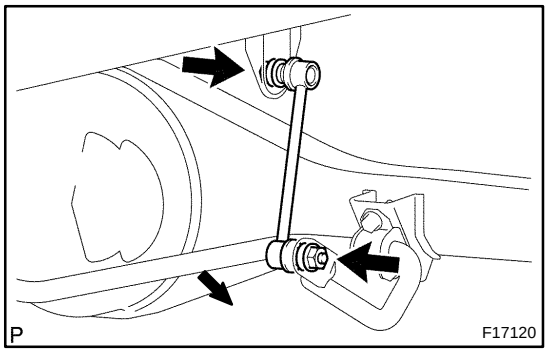

3. REMOVE STABILIZER BAR LINKS

(a) Remove the 2 nuts and stabilizer bar link.
Torque: 69 N·m (704 kgf·cm, 51 ft·lbf)

HINT:

If the ball joint stud turns together with the nut, use a hexagon wrench to hold the stud.

(b) Use the same procedure described above to the other side.

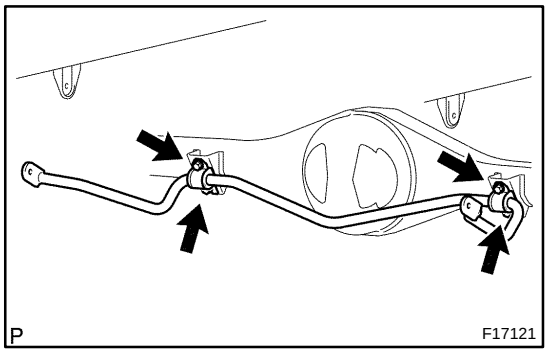

4. REMOVE STABILIZER BAR FROM REAR AXLE HOUSING

(a) Remove the 4 bolts and stabilizer bar with the bushings and brackets.
Torque: 29 N·m (296 kgf·cm, 21 ft·lbf)

(b) Remove the 2 brackets and 2 bushings from the stabilizer bar.

REAR WHEEL HUB BOLT

SA0BC−05

REPLACEMENT

1. REMOVE REAR WHEEL

2. REMOVE BRAKE DRUM AND GASKET

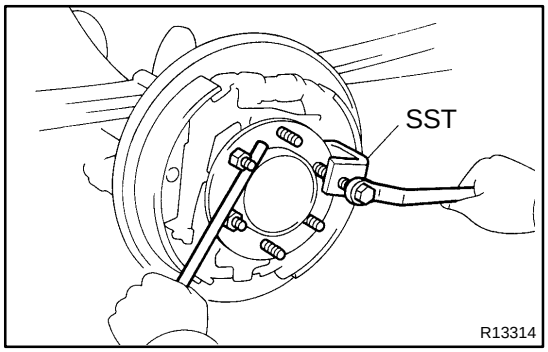

3. REMOVE REAR HUB BOLT

Using SST and a brass bar or an equivalent, remove the hub bolt.

SST 09650−17011

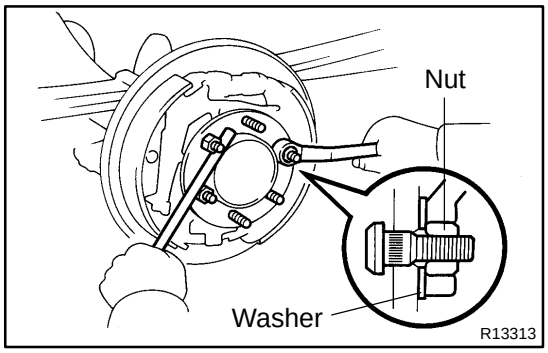

4. INSTALL HUB BOLT

(a) Install a washer and nut to a new hub bolt as shown in the illustration.

(b) Using a brass bar or an equivalent to hold, install the hub bolt by torquing the nut.

(c) Remove the nut and washer.

5. INSTALL NEW GASKET AND BRAKE DRUM

6. INSTALL REAR WHEEL

Torque: 110 N·m (1,150 kgf·cm, 83 ft·lbf)

TIRE AND WHEEL

SA1KL−05

INSPECTION

1. INSPECT TIRE

(a) Check the tires for wear and proper inflation pressure.

B, C−cab Type

Cold tire inflation pressure:

Tire size	Front kPa (kgf/cm^2, psi)	Rear kPa (kgf/cm^2, psi)
P245/70R16	200 (2.0, 29)	240 (2.4, 35)
P265/70R16	180 (1.8, 26) *1 200 (2.0, 29) *2	200 (2.0, 29) *1 210 (2.1, 30) *2
P265/65R17	200 (2.0, 29)	220 (2.2, 32)

D−cab Type

Cold tire inflation pressure:

Tire size	Front kPa (kgf/cm^2, psi)	Rear kPa (kgf/cm^2, psi)
P245/70R16	220 (2.2, 32)	240 (2.4, 35)
P265/70R16 *1	200 (2.0, 29) *1 220 (2.2, 32) *2	220 (2.2, 32) *1 230 (2.3, 33) *2
P265/65R17	200 (2.0, 29)	220 (2.2, 32)

*1: Vehicle without off−road package

*2: Vehicle with off−road package

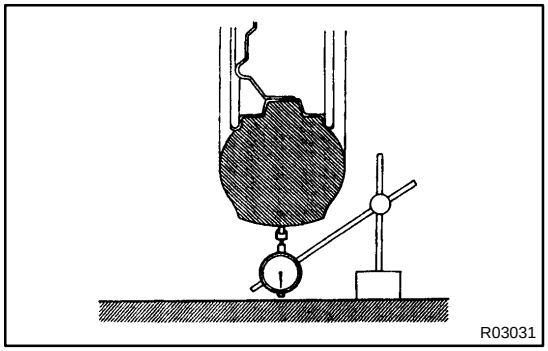

(b) Using a dial indicator, check the tire runout.
Tire runout: 3.0 mm (0.118 in.) or less

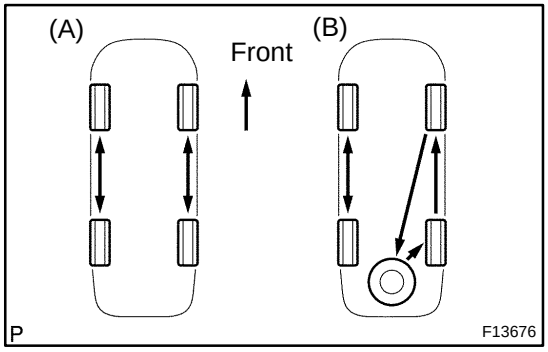

2. ROTATING TIRE

HINT:

- Rotate tires as shown in the illustration.
- Rotate as shown in (B) if the spare tire is included in the rotation.

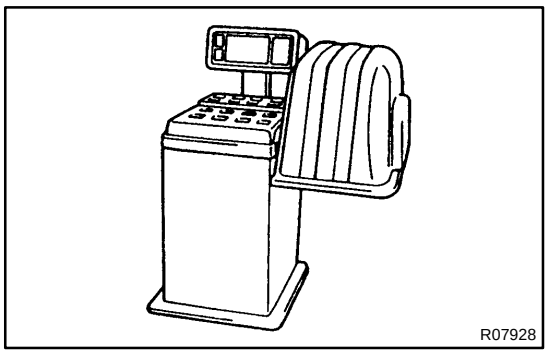

3. INSPECT WHEEL BALANCE

(a) Check and adjust the Off−the−car balance.

(b) If necessary, check and adjust the On−the−car balance.

Imbalance after adjustment: 14.0 g (0.031 lb) or less

4. CHECK FRONT SUSPENSION FOR LOOSENESS

5. CHECK STEERING LINKAGE FOR LOOSENESS

6. CHECK BALL JOINT FOR LOOSENESS

7. CHECK SHOCK ABSORBER WORKS PROPERLY

- Check if oil leaks.
- Check the mounting bushings for wear.
- Bounce front and rear of the vehicle.

TIRE PRESSURE MONITOR ECU

COMPONENTS

SA2D5−01

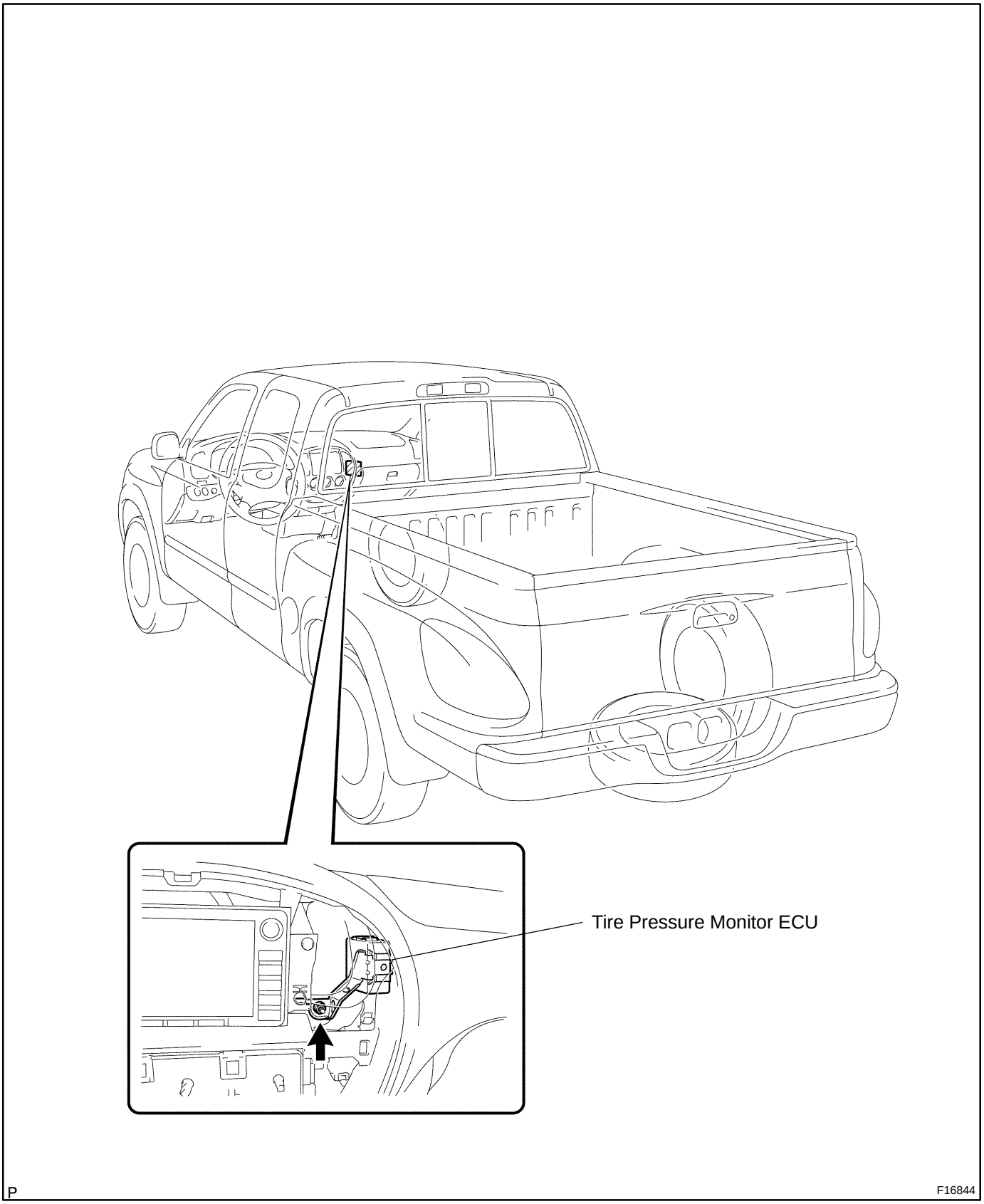

SA2D6−01

REPLACEMENT

1. **DISCONNECT CABLE FROM NEGATIVE BATTERY TERMINAL**
2. **REMOVE INTEGRATION CONTROL PANEL**
   (See page BO−111)
3. **REMOVE GLOVE COMPARTMENT**
   (See page BO−111)

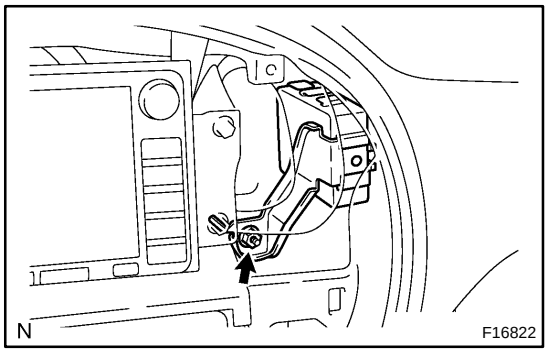

4. **REMOVE TIRE PRESSURE MONITOR ECU**

(a) Disconnect the connector.

(b) Remove the nut and tire pressure monitor ECU.

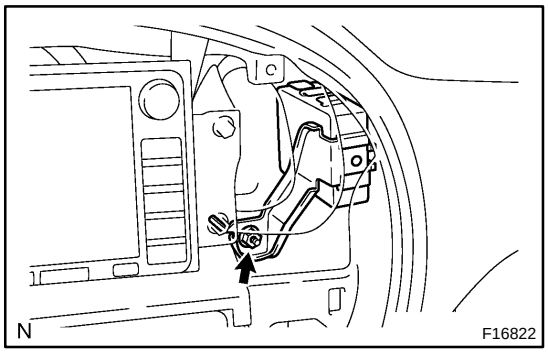

5. **INSTALL TIRE PRESSURE MONITOR ECU**

(a) Install the tire pressure monitor ECU with the nut.

(b) Connect the connector.

6. **INSTALL GLOVE COMPARTMENT**
   (See page BO−120)
7. **INSTALL INTEGRATION CONTROL PANEL**
   (See page BO−120)
8. **CONNECT CABLE TO NEGATIVE BATTERY TERMINAL**
9. **REGISTRATION OF TRANSMITTED ID**
   (See page DI−1290)
10. **INSPECT TIRE PRESSURE WARNING SYSTEM**
    (See page DI−1287)
    SST 09843−18040

TIRE PRESSURE MONITOR RECEIVER

SA2D8−01

COMPONENTS

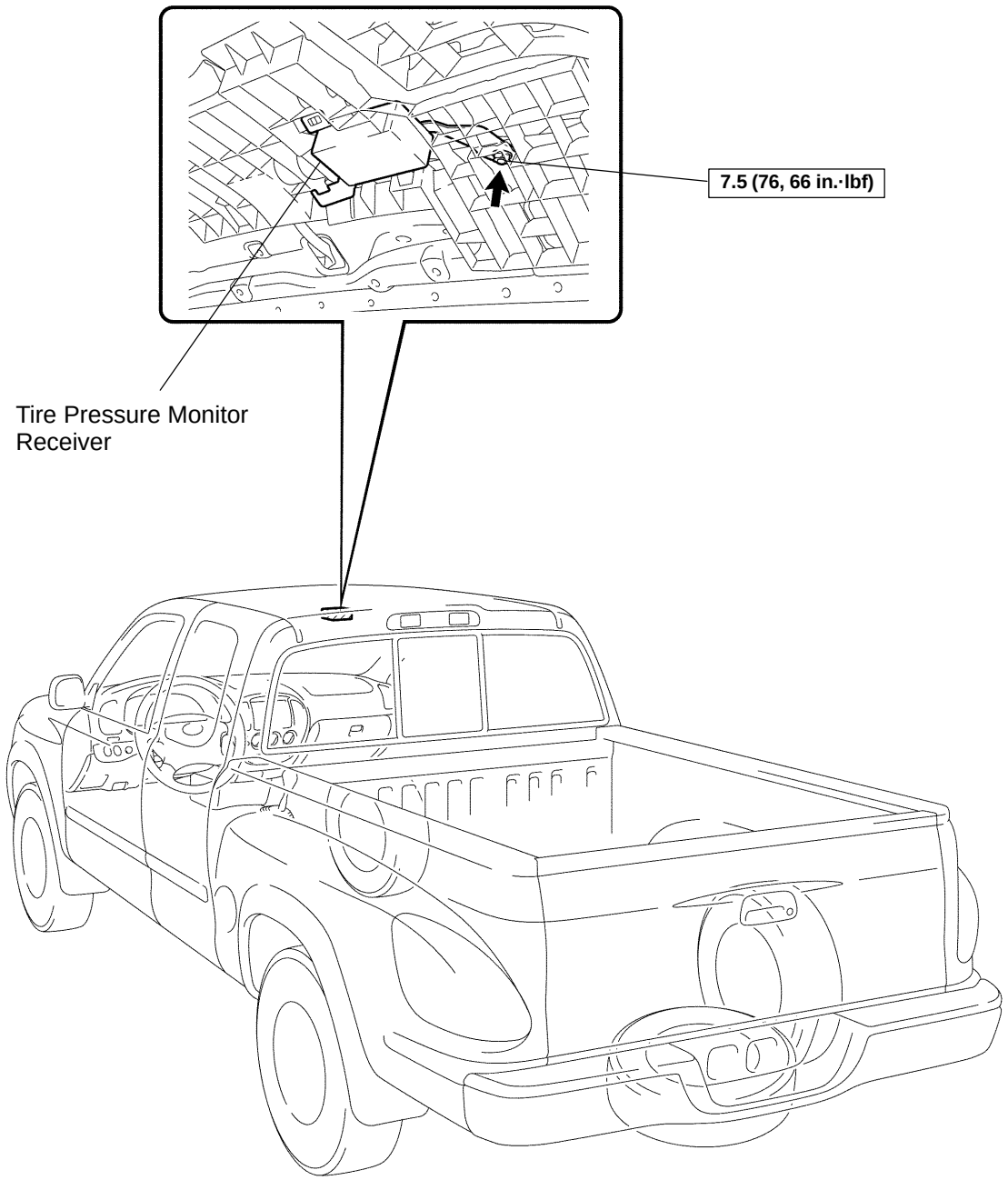

N·m (kgf·cm, ft·lbf) : Specified torque

P

F16842

SA2D9−01

REPLACEMENT

1. DISCONNECT CABLE FROM NEGATIVE BATTERY TERMINAL

2. REMOVE ROOF HEADLINING
(See page BO−126 or BO−133)

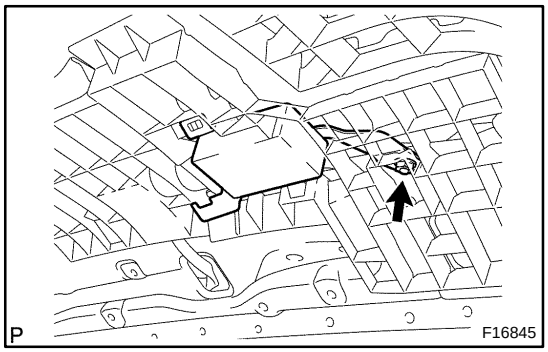

3. REMOVE TIRE PRESSURE MONITOR RECEIVER
(a) Disconnect the connector.
(b) Remove the nut.
(c) Remove the EA RIB LH.
(d) Remove the tire pressure monitor receiver from the EA RIB LH.

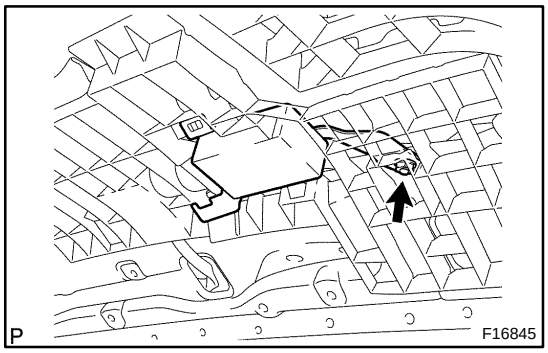

4. INSTALL TIRE PRESSURE MONITOR RECEIVER
(a) Install the tire pressure monitor receiver to the EA RIB LH.
(b) Connect the connector.
(c) Install the EA RIB LH to the body.
(d) Install the nut.
Torque: 7.5 N·m (76 kgf·cm, 66 in.·lbf)

5. INSTALL ROOF HEADLINING
(See page BO−130 or BO−138)

6. CONNECT CABLE TO NEGATIVE BATTERY TERMINAL

TIRE PRESSURE MONITOR VALVE

SA2DA−01

COMPONENTS

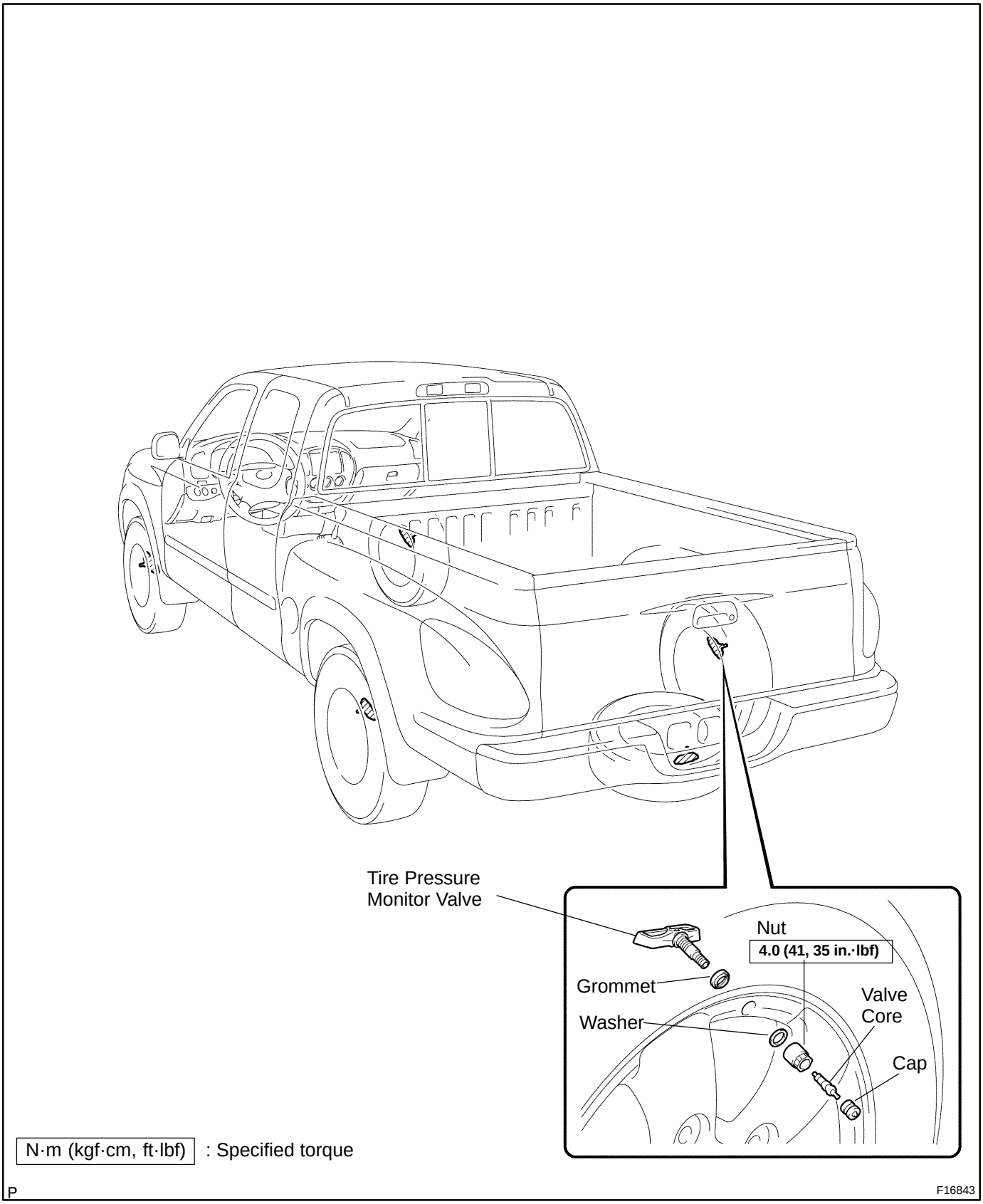

SA2DB−01

DISPOSAL

HINT:

The tire pressure monitor valve sub−assy is powered by a lithium battery. When disposing of the tire pressure monitor valve sub−assy, remove the battery and dispose of it correctly.

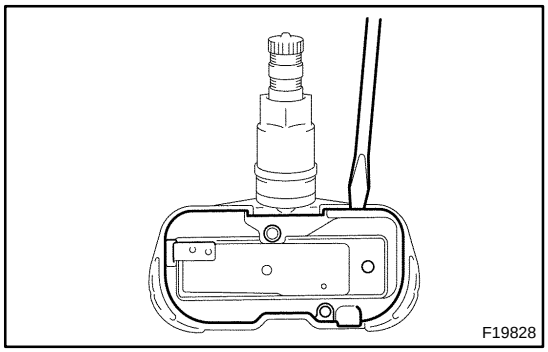

DISPOSE OF TIRE PRESSURE MONITOR VALVE

(a) Insert the tip of a screwdriver into the clearance and pry off the cover. Remove the back cover.

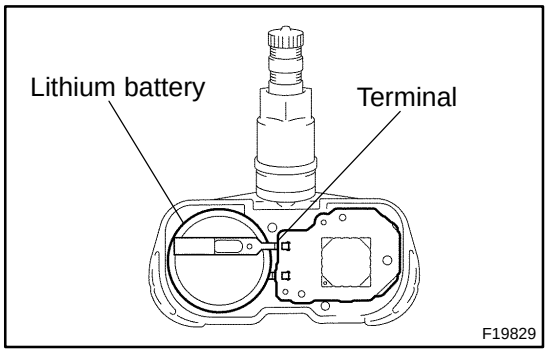

(b) The battery and base board covered with silicone resin are exposed. While taking out the battery, cut off the 2 terminals which connect the battery and base board.

SA2DC−01

REPLACEMENT

1. REMOVE FRONT TIRE

2. REMOVE REAR TIRE

3. REMOVE TIRE PRESSURE MONITOR VALVE

(a) Remove the valve core and cap, and release air from the tire.

(b) After ensuring that air is sufficiently released, remove the nut and washer that are used to fix the tire pressure monitor valve sub−assy and drop the sensor inside the tire.

HINT:

Keep the removed cap, valve core, nut and washer.

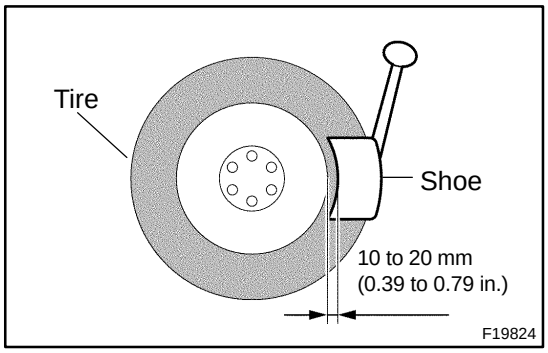

(c) After dropping the tire pressure monitor valve sub−assy into the tire, disengage the bead using the shoe of the tire remover.

NOTICE:

Be careful not to damage the tire pressure monitor valve because of interference between the sensor and tire bead.

(d) Remove the bead on the upper side.

(e) Take out the sensor from the tire and remove the bead on the lower side.

(f) Remove the inner grommet from the tire pressure monitor valve sub−assy.

HINT:

Check that there are no cracks or damage to the grommet. If any damage is found, replace the grommet together with the washer and nut.

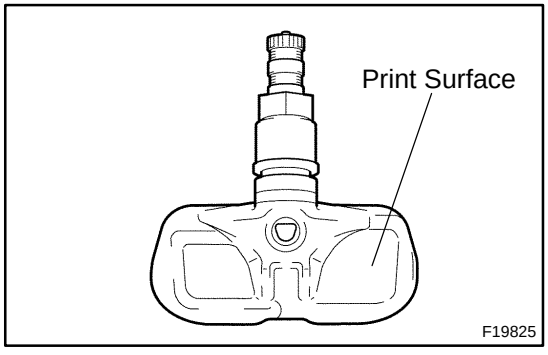

4. INSTALL TIRE PRESSURE MONITOR VALVE

(a) Insert the tire pressure monitor valve into the valve installation hole. Insert from the inside of the rim so that the print surface can be seen.

NOTICE:

- **Check that there is no visible deformation, damage or other abnormalities on the transmitter.**
- **Check that there is no foreign matter on the inner grommet and around the rim hole.**

- **If installed in the reverse direction, the tire pressure monitor valve may be damaged or fail to transmit signals when running at high speed.**
- **If installing a new tire pressure monitor valve, write down the ID number before installation.**
- **It is necessary to registor an ID in the ECU after installation (See page DI−1290).**

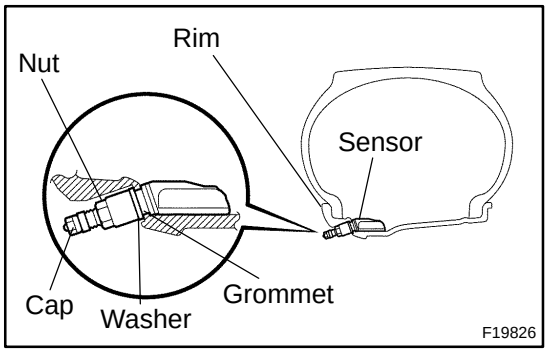

(b) Install the washer on the tire pressure monitor valve from the rim side and tighten with a nut.
Torque: 4.0 N·m (41 kgf·cm, 35 in.·lbf)

NOTICE:

- **Check that there is no foreign matter on the washer and nut.**
- **If the tire pressure monitor valve is removed when the tire is removed for replacement, check that there is no damage or cuts, and no foreign matter such as mud, dirt or sand attached to the grommet. Replace the grommet with a new one if any of the defects mentioned above are found.**
- **Check that there is no oil, water or lubricant around the rim hole, tire pressure monitor valve, washer and nut. Failing to do so may result in improper installation.**

(c) After the tire is inflated, the valve nut may be loose. Retighten the nut to the specified torque and then check for air leaks with soapy water.
Torque: 4.0 N·m (41 kgf·cm, 35 in.·lbf)

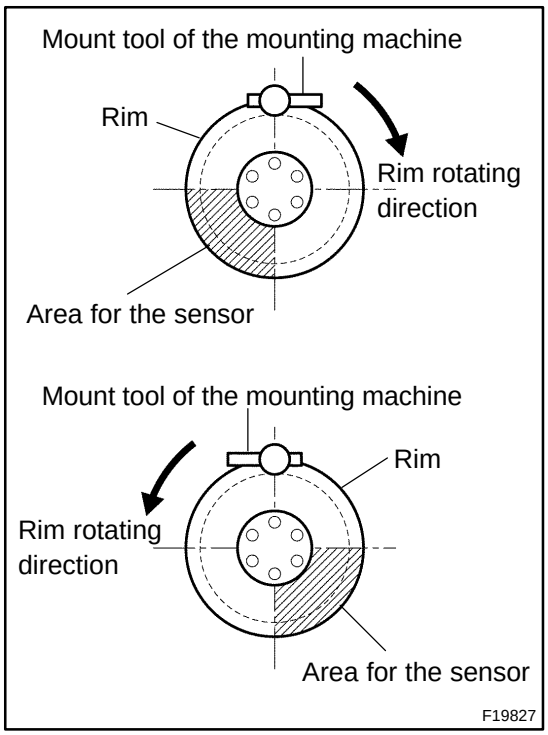

(d) Set the wheel disc to the mounting machine and install the lower tire bead. Position the main body of the sensor as in the shaded area shown in the illustration.

NOTICE:

If the sensor is positioned outside this area, it generates interference with the tire bead, causing possible damage to the sensor.

(e) Install the upper bead.

NOTICE:

Make sure that the tire bead and tool do not interfere with the main body of the sensor and that the sensor is not clamped by the bead.

5. **INSTALL FRONT WHEEL**
Torque: 103 N·m (1,050 kgf·cm, 76 ft·lbf)
6. **INSTALL REAR WHEEL**
Torque: 103 N·m (1,050 kgf·cm, 76 ft·lbf)
7. **INSPECT TIRE (See page SA−3)**
8. **REGISTRATION OF TRANSMITTED ID (See page DI−1290)**

9. INSPECT TIRE PRESSURE WARNING SYSTEM
(See page DI−1287)
SST 09843−18040

TROUBLESHOOTING

PROBLEM SYMPTOMS TABLE

SA090−11

Use the table below to help you find the cause of the problem. The numbers indicate the priority of the likely cause of the problem. Check each part in order. If necessary, replace these parts.

Symptom	Suspect Area	See page
Bottoming	1. Vehicle (Overloaded)	−
	2. Spring (Weak)	SA−62 SA−154
	3. Shock absorber (Worn)	SA−65 SA−150
Sways/pitches	1. Tire (Worn or improperly inflated)	SA−3
	2. Stabilizer bar (Bent or broken)	SA−88
	3. Shock absorber (Worn)	SA−65 SA−150
Front wheel shimmy	1. Tire (Worn or improperly inflated)	SA−3
	2. Wheel (Out of balance)	SA−3
	3. Shock absorber (Worn)	SA−65
	4. Wheel alignment (Incorrect)	SA−5
	5. Ball joints (Worn)	SA−81 SA−83 SA−86
	6. Hub bearing (Loose or worn)	−
	7. Steering linkage (Loose or worn)	−
	8. Steering gear (Out of adjustment or broken)	SR−70
Abnormal tire wear	1. Tire (Improperly inflated)	SA−3
	2. Wheel alignment (Incorrect)	SA−5
	3. Shock absorber (Worn)	SA−65 SA−150
	4. Suspension parts (Worn)	−
Noise in front differential	1. Oil level (Low or wrong grade)	SA−36
	2. Excessive backlash between pinion and ring gear	SA−38
	3. Ring, pinion or side gear (Worn or chipped)	SA−38
	4. Pinion shaft bearing (Worn)	SA−38
	5. Side bearing (Worn)	SA−38
	6. Differential bearing (Loose or worn)	SA−38
Oil leak from front differential	1. Oil level (Too high or wrong grade)	SA−36
	2. Front differential rear oil seal (Worn or damaged)	SA−36
	3. Side gear oil seal (Worn or damaged)	SA−38
	4. Companion flange (Loose or damaged)	SA−38
	5. Side gear shaft (Damaged)	SA−38
Noise in rear axle	1. Oil level (Low or wrong grade)	SA−101
	2. Excessive backlash between pinion and ring gear	SA−104
	3. Ring, pinion or side gear (Worn or chipped)	SA−104
	4. Pinion shaft bearing (Worn)	SA−104
	5. Axle shaft bearing (Worn)	SA−92
	6. Differential bearing (Loose or worn)	SA−104
Oil leak from rear axle	1. Oil seal (Worn or damaged)	SA−92
	2. Rear axle housing (Cracked)	−
Oil leak from rear differential	1. Oil level (Too high or wrong grade)	SA−101
	2. Oil seal (Worn or damaged)	SA−101
	3. Companion flange (Loose or damaged)	SA−104

SA28L−04

REPAIR PROCEDURES

HINT:

This is a flow chart for vehicle pull.

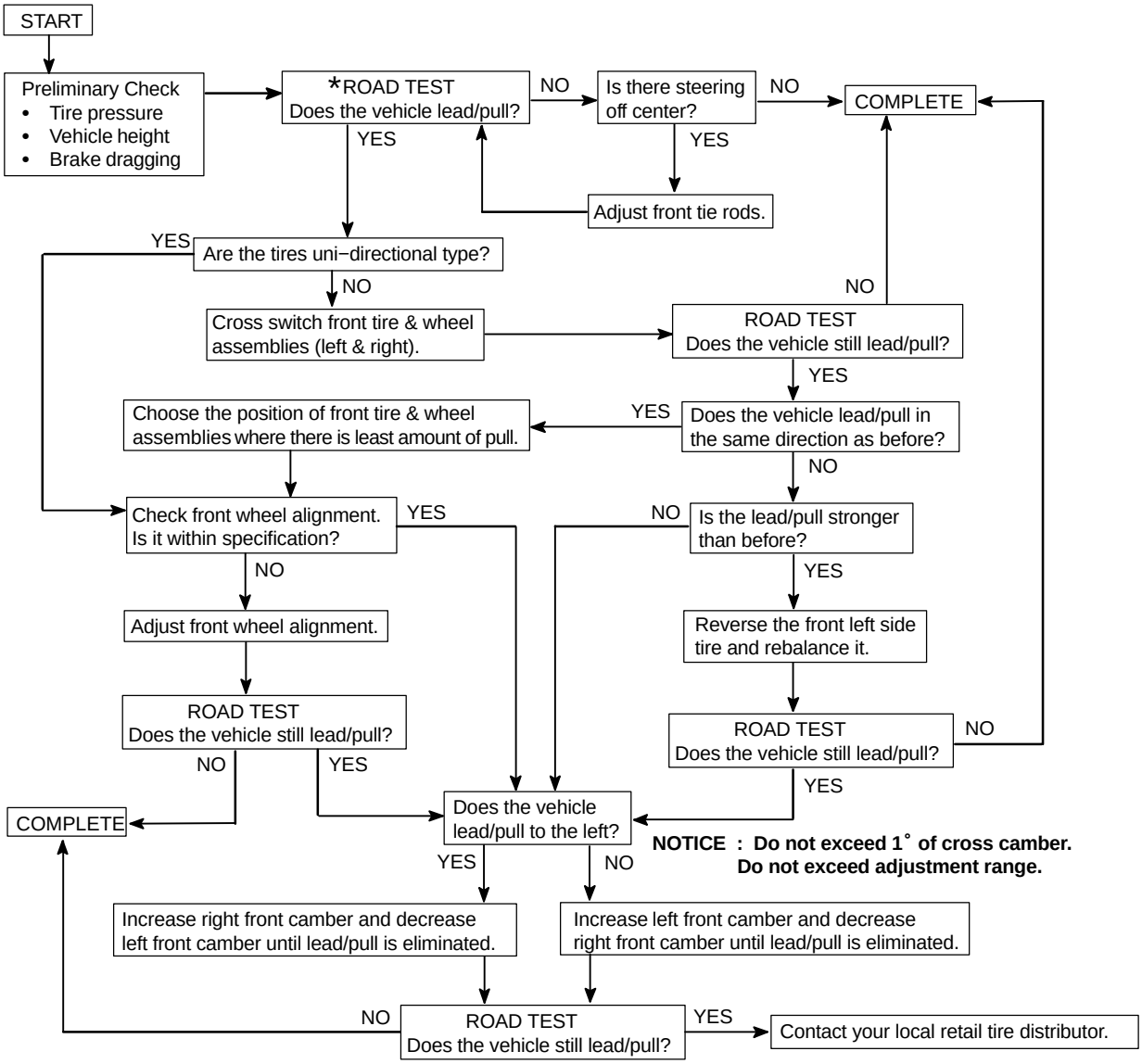

* Select a flat road where the vehicle can be driven in a straight line for 100 meters at a constant speed of 35mph. Please confirm safety and set the steering wheel to its straight position. Drive the vehicle in a straight line for 100 meters at a constant speed of 35mph without holding the steering wheel.

(1) The vehicle can keep straight but the steering wheel has some angle.
→ STEERING OFF CENTER (See page SR−10)

(2) The vehicle cannot keep straight.
→ STEERING PULL

WHEEL AND TIRE SYSTEM

SA2D7−01

PRECAUTION

1. REMOVAL AND INSTALLATION OF TIRE PRESSURE MONITOR VALVE SUB−ASSY

(a) When installing a tire, make sure that the tire pressure monitor valve does not interfere with the tire bead in order to prevent damage to the sensor.

(b) After completing the operation, remove the valve core to rapidly release air and check that the warning light comes on. If not, the system may have a defect.

(c) If there is air leakage, tighten the nut with a force of 4.0 N·m (41 kgf·cm, 35 in.·lbf) and push the valve core 2 or 3 times to remove any dirt attached to the valve core.
If there is still air leakage, replace the grommet, the washer and the nut all together.

(d) When installing the tire pressure monitor valve, check whether the rim, grommet, washer and nut are clean. Use a manufacturer−specified cap.

(e) When putting air into the tire, first install the tire pressure valve straight onto the stem of the tire pressure monitor valve.

2. TIRE AND WHEEL REPLACEMENT OR TIRE ROTATION

(a) When replacing tires, be sure to check if the grommet of the tire valve is damaged. If so, replace the grommet together with the washer and nut.

(b) When tires and wheels are replaced, make sure to register the transmitter ID.

ACOUSTIC CONTROL INDUCTION SYSTEM (ACIS)

SF1Z0−01

ON−VEHICLE INSPECTION

1. INSPECT INTAKE AIR CONTROL FUNCTION

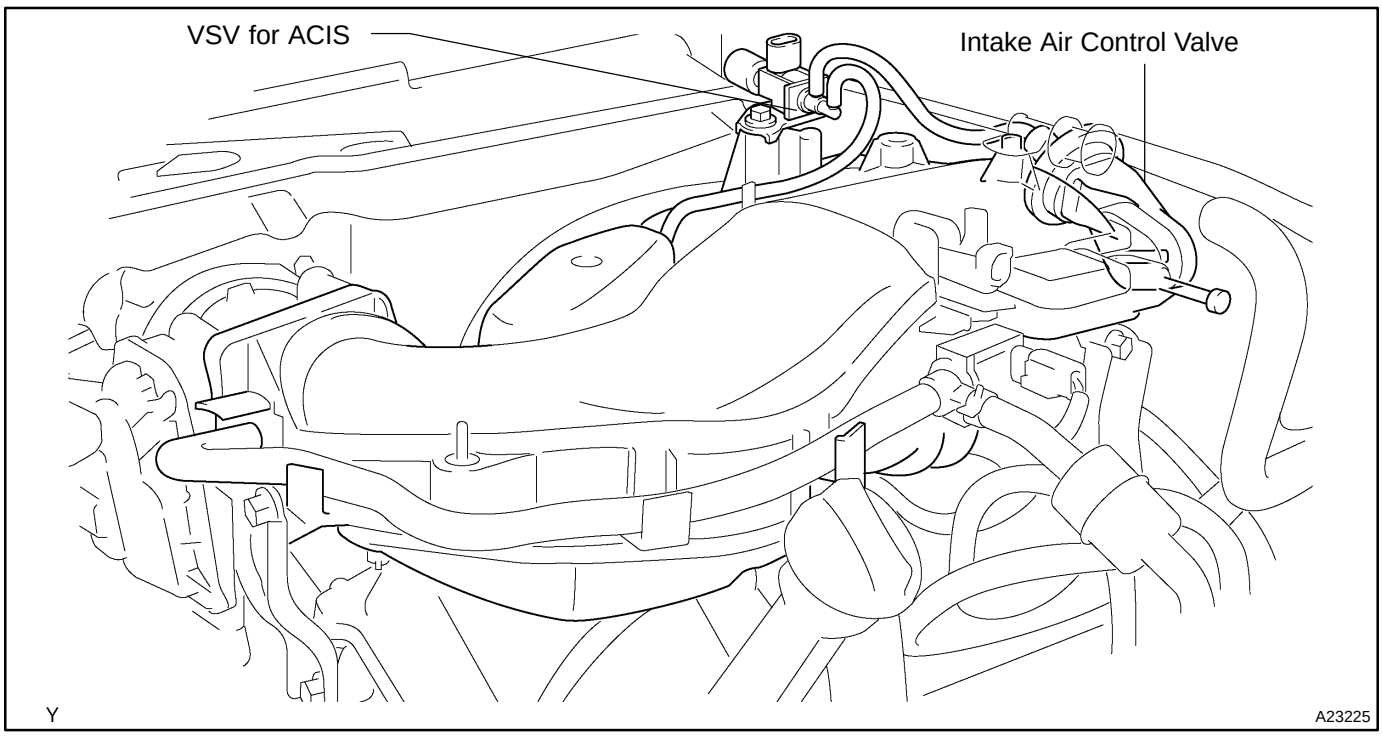

(a) Remove the V−bank cover.
(b) Connect the hand−held tester to the DLC3.
(c) Perform the ACTIVE TEST, then check that the actuator rod operates.
(d) Start the engine.
(e) Check that the VSV for ACIS is ON under the following conditions:
- Depressing the accelerator pedal to 60% accelerator opening angle.
- Racing the engine above 4,700 rpm.

(f) Check that the VSV for ACIS is OFF under the following conditions:
- The engine idling.
- Release the accelerator pedal from the condition of step (e).

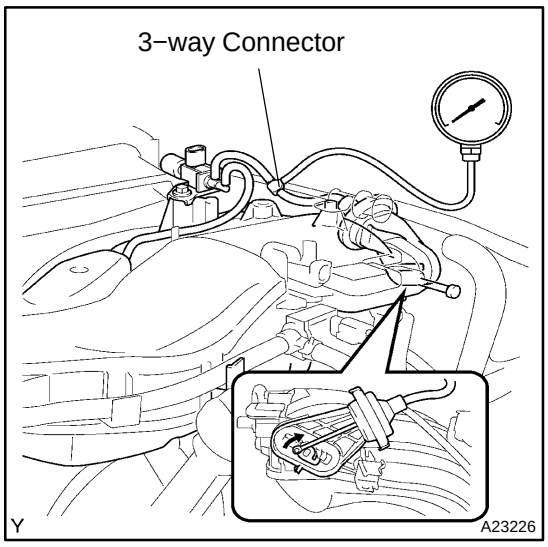

2. INSPECT INTAKE AIR CONTROL VALVE

(a) Remove the V−bank cover.
(b) Using a 3−way connector, connect the vacuum gauge to the actuator hose.
(c) Start the engine.
(d) While the engine is idling, check that the vacuum gauge needle momentarily fluctuates up to approx. 39.9 kPa (300 mmHg, 11.8 in.Hg). (The actuator rod is pulled out.)
(e) Rapidly and fully depress the accelerator pedal and check that the vacuum gauge needle points to 0 kPa (0 mmHg, 0 in.Hg). (The actuator rod is returned.)
(f) Remove the vacuum gauge, and connect the vacuum hose to the actuator.
(g) Reinstall the V−bank cover.

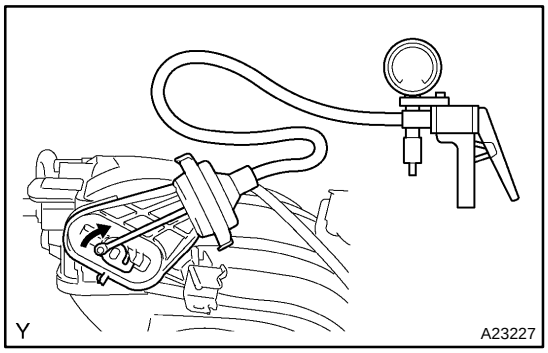

3. INSPECT INTAKE AIR SURGE TANK

Inspect the diaphragm.

(1) Check that the lever moves when a vacuum of 26.6 kPa (200 mmHg, 7.9 in.Hg) is applied with the MITYVAC (hand−held vacuum pump) on.
(2) Check that the vacuum of 26.6 kPa (200 mmHg, 7.9 in.Hg) is sustained for 1 minute in the above state.

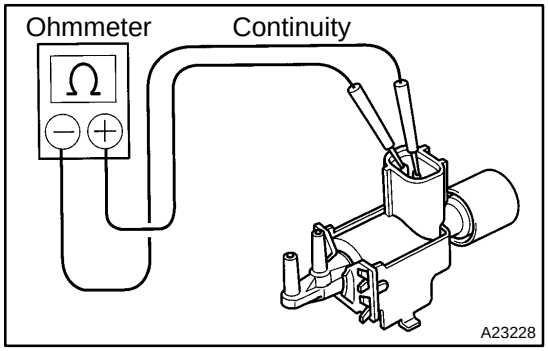

4. INSPECT VSV FOR ACIS

(a) Inspect the VSV for on open circuit.
Using an ohmmeter, check that there is continuity between each terminal.
Resistance: 33 to 39 Ω at 20°C (68°F)

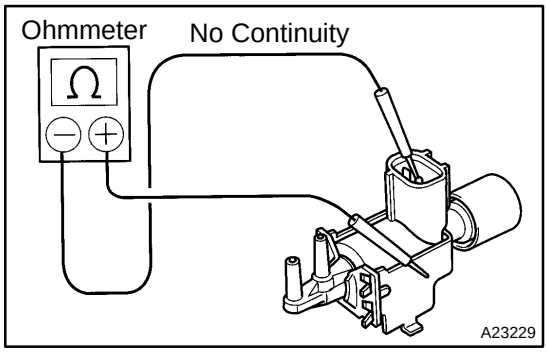

(b) Inspect the VSV for ground.
Using an ohmmeter, check that there is no continuity between each terminal and the body.

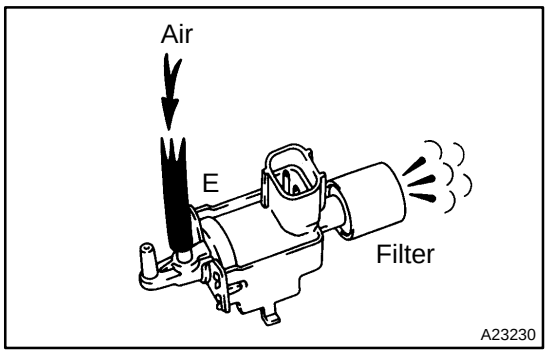

(c) Inspect VSV operation.
(1) Check that air flows from port E to the filter.

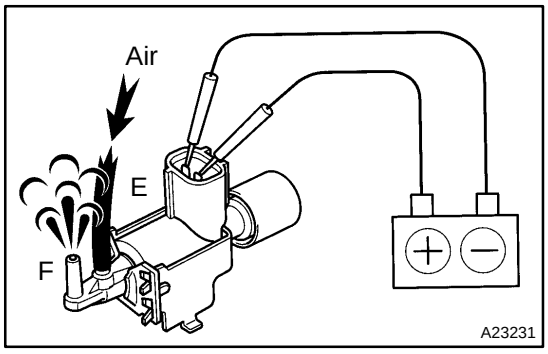

(2) Apply battery voltage across the terminals.
(3) Check that air flows from port E to port F.

ACC CUT RELAY

SF1Z5−01

INSPECTION

1. REMOVE ACC CUT RELAY

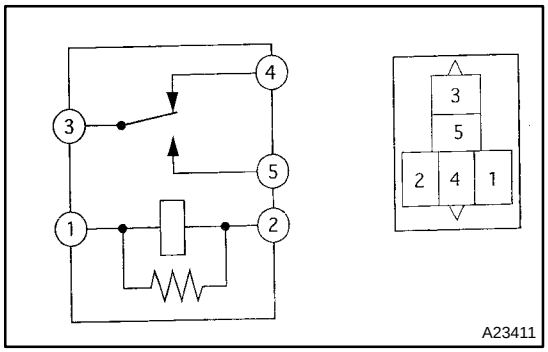

2. INSPECT ACC CUT RELAY

(a) Using an ohmmeter, check for continuity between each terminal.

Specified condition:

Terminal No.	Specified condition
1 − 2 3 − 4	Continuity
3 − 5	No continuity

(b) Using an ohmmeter, check for continuity between terminals 3 and 5 when the battery voltage is applied across terminals 1 and 2.

Specified condition: Continuity

3. INSTALL ACC CUT RELAY

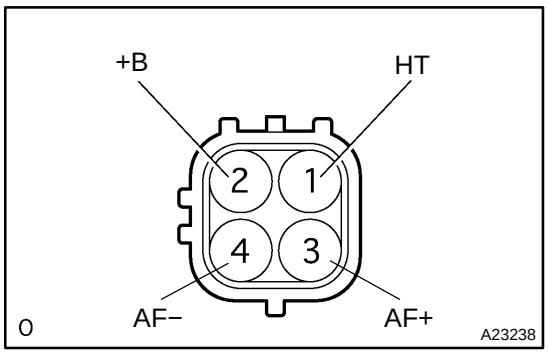

AIR−FUEL RATIO (A/F) SENSOR

SF1ZC−01

INSPECTION

1. INSPECT AIR FUEL RATIO SENSOR (BANK1, BANK2 AIR FUEL RATIO SENSOR)

Using an ohmmeter, measure the resistance between the terminals.

Resistance:

Terminal No.	Resistance
1 (HT) ⇔ 2 (+B)	1.8 to 3.4 Ω at 20 °C (68 °F)
1 (HT) ⇔ 2 (+B)	5.0 to 7.5 Ω at 500 °C (932 °F)
1 (HT) ⇔ 4 (AF−)	No Continuity

If the resistance is not as specified, replace the sensor.

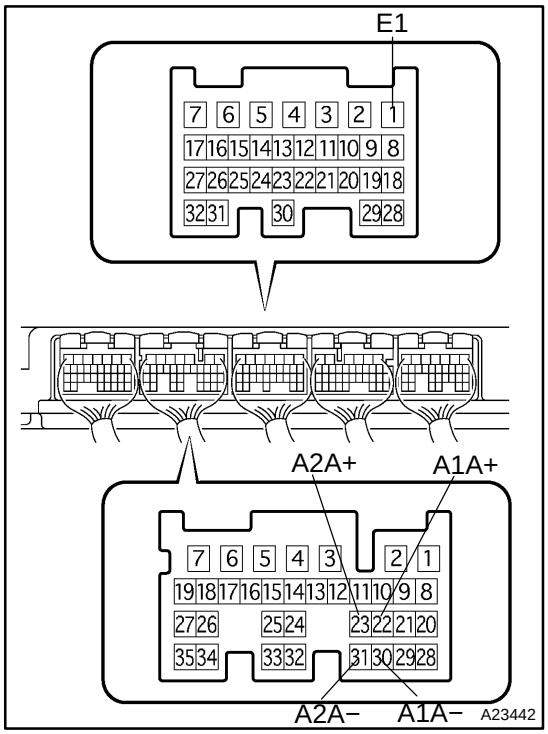

2. INSPECT AIR−FUEL RATIO COMPENSATION SYSTEM

(a) Measure the voltage between terminals of the ECM.

Standard voltage:

Terminal No.	Condition	Voltage
A1A+ ⇔ E1	IG switch ON	3.3V
A1A− ⇔ E1	IG switch ON	3.0V
A2A+ ⇔ E1	IG switch ON	3.3V
A2A− ⇔ E1	IG switch ON	3.0V

NOTICE:

Connect test leads from the back side of the ECM connector.

HINT:

The voltage between terminals of the ECM is kept constant regardless of the voltage of the A/F sensor.

(b) Connect the hand−held tester to the DLC3.

(c) Select ”DATA MONITOR” − ”A/FS B1 S1”, ”A/FS B2 S1” and ”O2S B1 S2” to display the monitor.

(d) Warm up the A/F sensor by running the engine at 2,500 rpm for approx. 2 minutes.

(e) Keep the engine speed at 2,500 rpm and confirm that the displays of the ”A/FS B1 S1” and ”A/FS B2 S1” are similar to the illustration on the left.

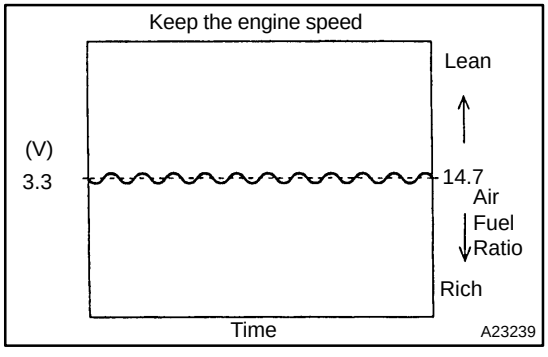

NOTICE:

The illustration differs from the real display.

HINT:

The waveform of the A/F sensor is displayed only on the hand−held tester.

(f) Confirm that the display of the ”O2S B1 S2” changes between 0V to 1V with the engine speed at 2,500 rpm.

ACCELERATOR PEDAL POSITION SENSOR

SF1ZE−01

INSPECTION

1. INSPECT ACCELERATOR PEDAL POSITION SENSOR

(a) Connect the hand−held tester to the DLC3.

(b) Turn the ignition switch to the ON position.

(c) Check if the voltage (ACCEL POS) of the CURRENT DATA indicates the standard value.

Accelerator pedal released: 0.5 to 1.1 V

Accelerator pedal depressed: 2.6 to 4.5 V

(d) Check if the voltage (ACCEL POS #2) of the CURRENT DATA indicates the standard value.

Accelerator pedal released: 1.2 to 2.0 V

Accelerator pedal depressed: 3.4 to 5.3 V

If not using a hand−held tester, measure the voltage between terminals (VPA − EPA, VPA2 − EPA2) of the ECM connector (see page DI−34).

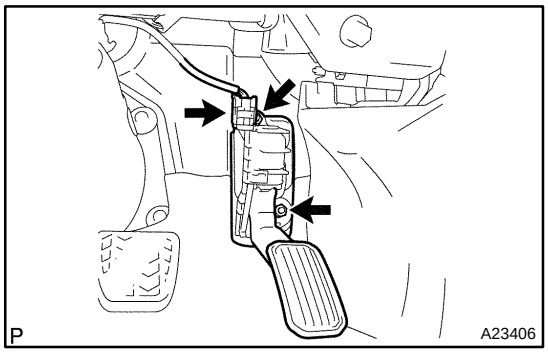

2. REMOVE ACCELERATOR PEDAL ROD

(a) Disconnect the accelerator pedal connector.

(b) Remove the 2 nuts and the accelerator pedal assy.

3. INSTALL ACCELERATOR PEDAL ROD

NOTICE:

- **Avoid physical shock to the accelerator pedal assy.**
- **Do not disassemble the accelerator pedal assy.**

(a) Install the accelerator pedal assy with the 2 nuts.

Torque: 5.0 N·m (51 kgf·cm, 44 in.·lbf)

(b) Connect the accelerator pedal connector.

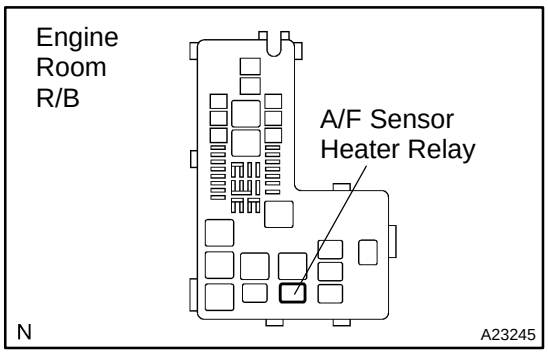

A/F SENSOR HEATER RELAY

SF1Z2−01

INSPECTION

1. REMOVE A/F SENSOR HEATER RELAY

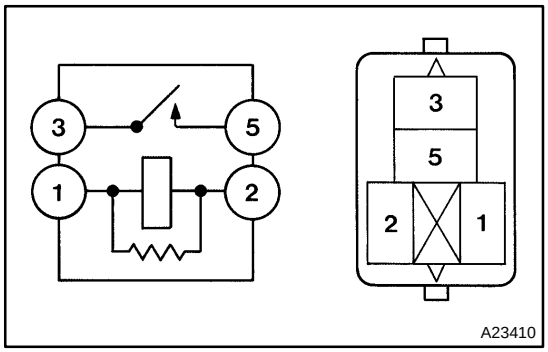

2. INSPECT A/F SENSOR HEATER RELAY

(a) Using an ohmmeter, check for continuity between each terminal.

Specified condition:

Terminal No.	Specified condition
1 − 2	Continuity
3 − 5	No continuity

(b) Using an ohmmeter, check for continuity between terminals 3 and 5 when the battery voltage is applied across terminals 1 and 2.

Specified condition: Continuity

3. INSTALL A/F SENSOR HEATER RELAY

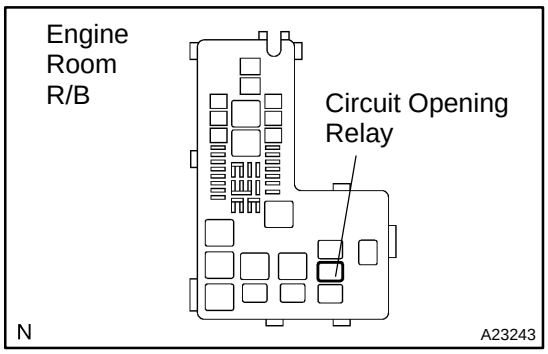

CIRCUIT OPENING RELAY

SF1Z3−01

INSPECTION

1. REMOVE CIRCUIT OPENING RELAY

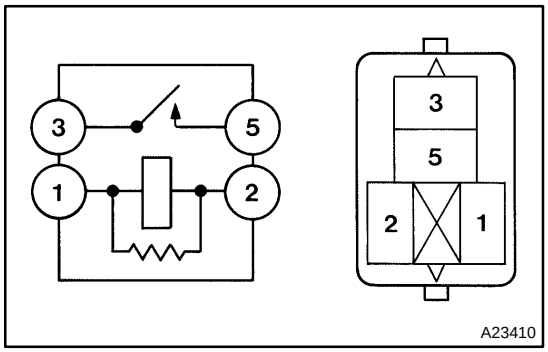

2. INSPECT CIRCUIT OPENING RELAY

(a) Using an ohmmeter, check for continuity between each terminal.

Specified condition:

Terminal No.	Specified condition
1 − 2	Continuity
3 − 5	No continuity

(b) Using an ohmmeter, check for continuity between terminals 3 and 5 when the battery voltage is applied across terminals 1 and 2.

Specified condition: Continuity

3. INSTALL CIRCUIT OPENING RELAY

SF1YW−01

COMPONENTS

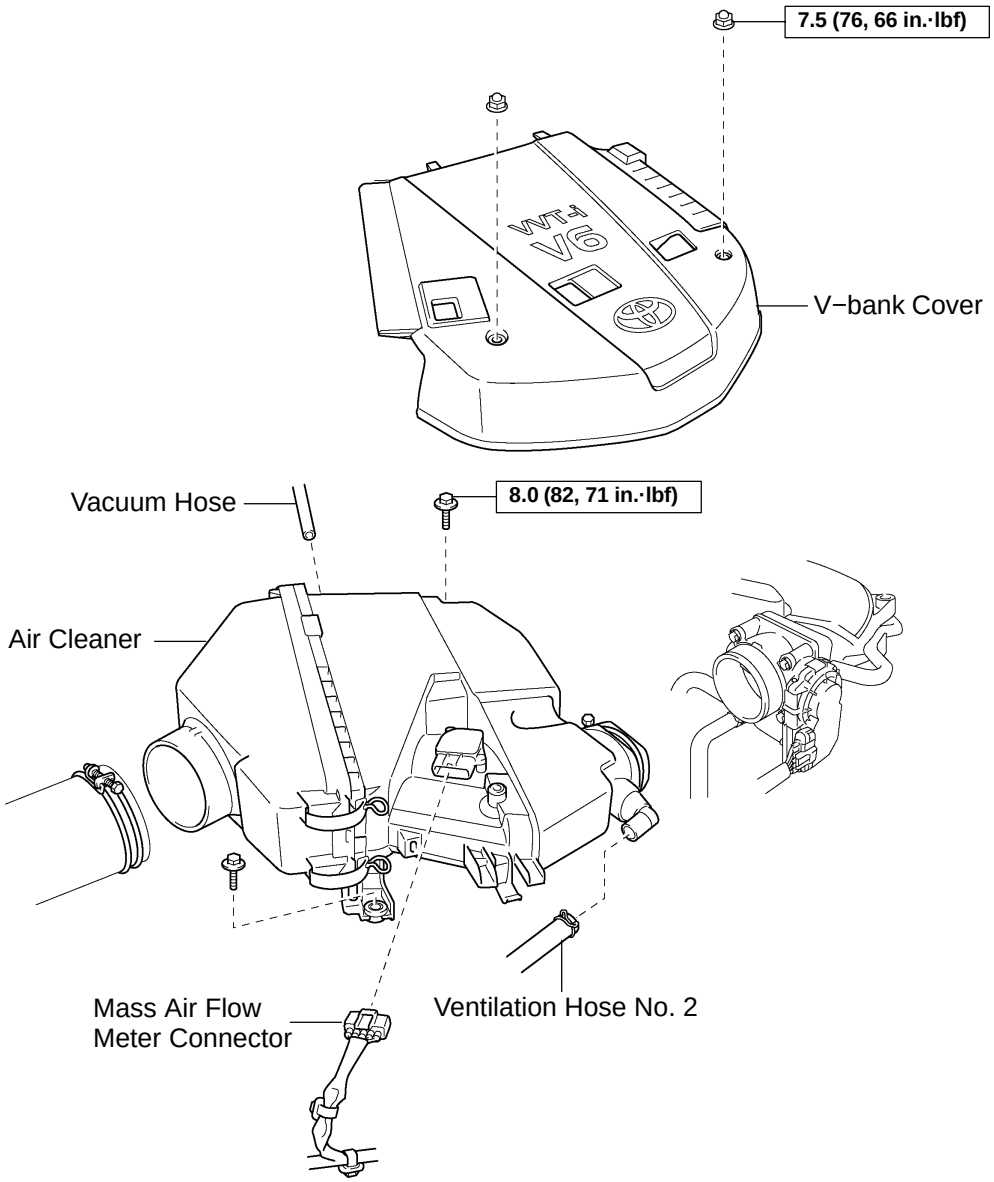

N·m (kgf·cm, ft·lbf) : Specified torque

Y

A23082

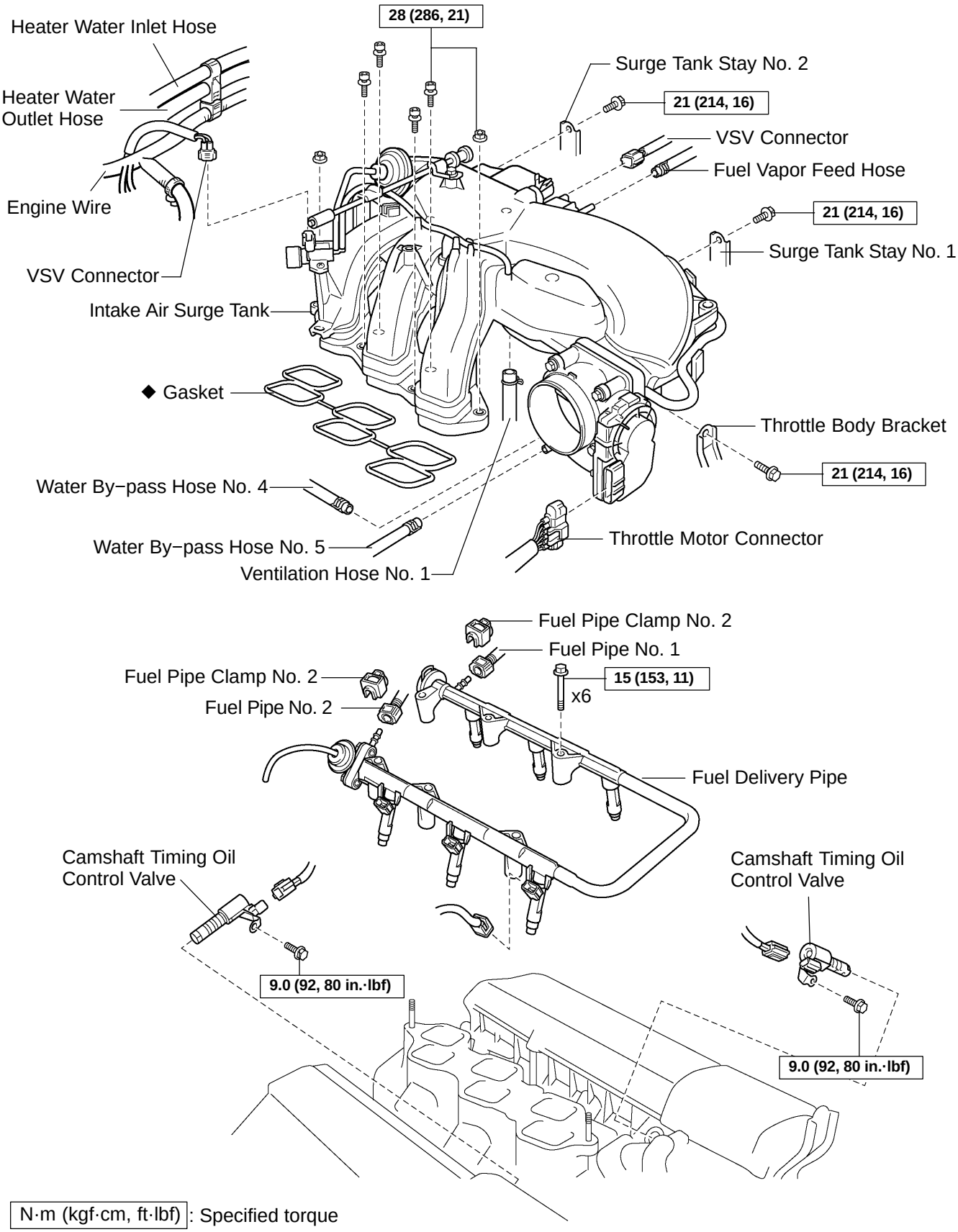
Heater Water Inlet Hose
28 (286, 21)
Surge Tank Stay No. 2
Heater Water Outlet Hose
21 (214, 16)
VSV Connector
Fuel Vapor Feed Hose
Engine Wire
21 (214, 16)
Surge Tank Stay No. 1
VSV Connector
Intake Air Surge Tank
◆ Gasket
Throttle Body Bracket
21 (214, 16)
Water By−pass Hose No. 4
Water By−pass Hose No. 5
Throttle Motor Connector
Ventilation Hose No. 1
Fuel Pipe Clamp No. 2
Fuel Pipe No. 1
Fuel Pipe Clamp No. 2
15 (153, 11)
x6
Fuel Pipe No. 2
Fuel Delivery Pipe
Camshaft Timing Oil Control Valve
Camshaft Timing Oil Control Valve
9.0 (92, 80 in.·lbf)
9.0 (92, 80 in.·lbf)
N·m (kgf·cm, ft·lbf): Specified torque
◆ Non−reusable part
N
A23206

SF1YY−01

INSPECTION

1. INSPECT CAMSHAFT TIMING OIL CONTROL VALVE RESISTANCE

Using an ohmmeter, measure the resistance between the terminals.

Resistance: 6.9 to 7.9 Ω at 20°C (68°F)

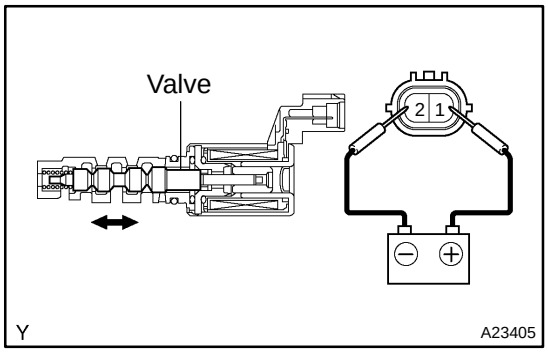

2. INSPECT VALVE MOVEMENT

Connect the positive (+) lead from the battery to terminal 1 and the negative (−) lead to terminal 2, and check the movement of the valve.

NOTICE:

Confirm that the valve does not catch.

HINT:

Bad returning of the valve by catching foreign objects causes subtle pressure leak in the advanced direction. DTCs could be detected.

SF1YZ−01

INSTALLATION

1. INSTALL CAMSHAFT TIMING OIL CONTROL VALVE

(a) Install the 2 camshaft timing oil control valves to each cylinder head, and tighten the 2 bolts.
Torque: 9.0 N·m (92 kgf·cm, 80 in.·lbf)

(b) Connect the 2 oil control valve connectors.

2. INSTALL FUEL DELIVERY PIPE

3. INSTALL INTAKE AIR SURGE TANK (See page EM−89)

4. INSTALL AIR CLEANER (See page EM−89)

5. INSTALL V−BANK COVER

CAMSHAFT TIMING OIL CONTROL VALVE

SF1YV−01

ON−VEHICLE INSPECTION

1. INSPECT CAMSHAFT TIMING OIL CONTROL VALVE

(a) Connect the hand−held tester to the DLC3.
(b) Turn the ignition switch to the ON position.
(c) Start the engine and warm it up.
(d) Connect the hand−held tester and select the VVT from the ACTIVE TEST menu.
(e) Check the engine speed when the OCV is operated by the hand−held tester.

Standard:

VVT system is OFF (OCV is OFF): Normal engine speed
VVT system is ON (OCV is ON): Rough idle or engine stalled

SF1YX−01

REMOVAL

1. REMOVE V−BANK COVER

2. REMOVE AIR CLEANER (See page EM−62)

3. REMOVE INTAKE AIR SURGE TANK (See page EM−62)

4. REMOVE FUEL DELIVERY PIPE

5. REMOVE CAMSHAFT TIMNG OIL CONTROL VALVE

(a) Disconnect the 2 oil control valve connectors.

(b) Remove the 2 bolts and 2 camshaft timing oil control valves.

ENGINE CONTROL MODULE (ECM)

SF1ZF−01

COMPONENTS

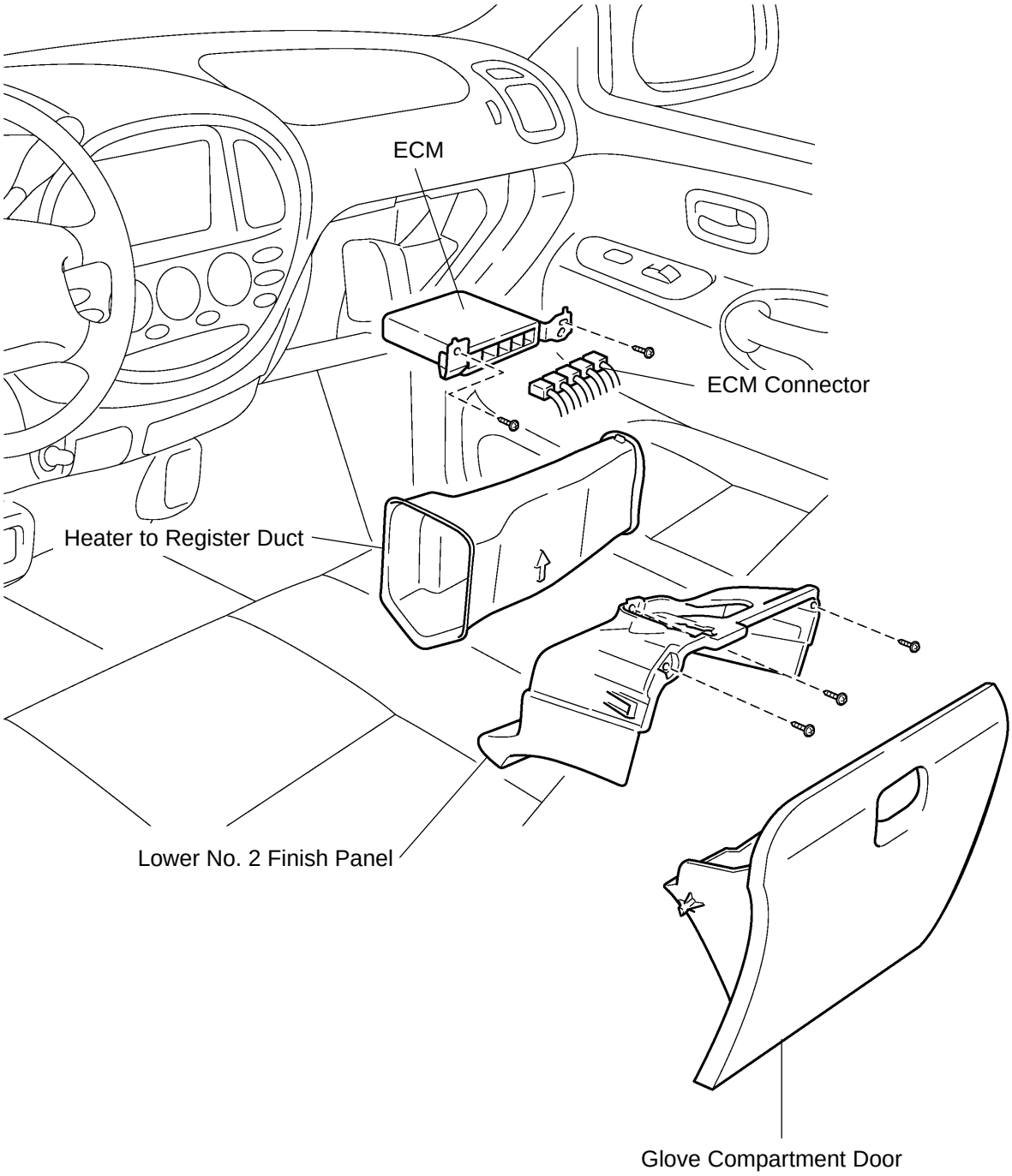

N

A23205

SF1ZG−01

INSPECTION

INSPECT ECM (See page DI−1)

ENGINE COOLANT TEMPERATURE (ECT) SENSOR

SF1Z8−01

INSPECTION

1. DRAIN ENGINE COOLANT

2. REMOVE V−BANK COVER

3. REMOVE ENGINE COOLANT TEMPERATURE SENSOR

(a) Disconnect the engine coolant temperature sensor connector.

(b) Remove the engine coolant temperature sensor and gasket from the water by−pass joint.

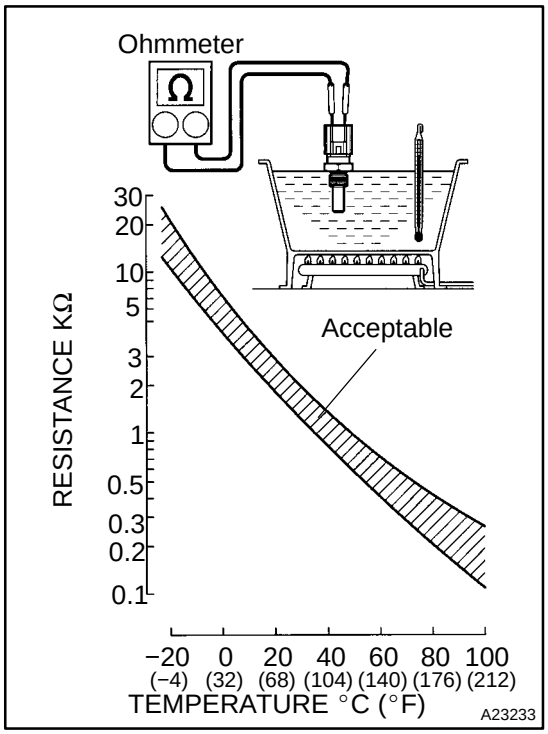

4. INSPECT ENGINE COOLANT TEMPERATURE SENSOR RESISTANCE

Using an ohmmeter, measure the resistance between terminals.

Resistance:

2.32 to 2.59 kΩ at 20 °C (68 °F)

0.310 to 0.326 kΩ at 80 °C (176 °F)

NOTICE:

When inspecting the water temperature sensor in water, prevent water flow into the terminals. After inspection, wipe the water off from the sensor.

5. INSTALL ENGINE COOLANT TEMPERATURE SENSOR

(a) Install a new gasket and engine coolant temperature sensor to the water by−pass joint.

Torque: 20 N·m (204 kgf·cm, 15 ft·lbf)

(b) Connect the engine coolant temperature connector.

6. ADD ENGINE COOLANT

7. CHECK FOR COOLANT LEAKS

8. INSTALL V−BANK COVER

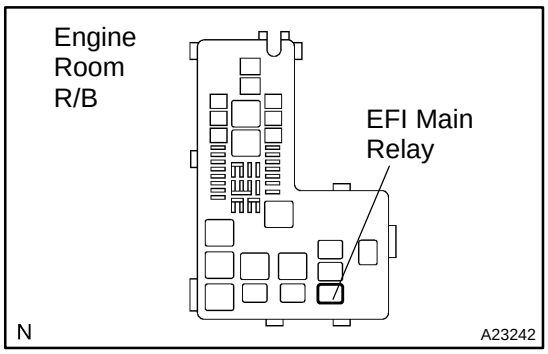

EFI MAIN RELAY

SF1Z1−01

INSPECTION

1. REMOVE EFI MAIN RELAY

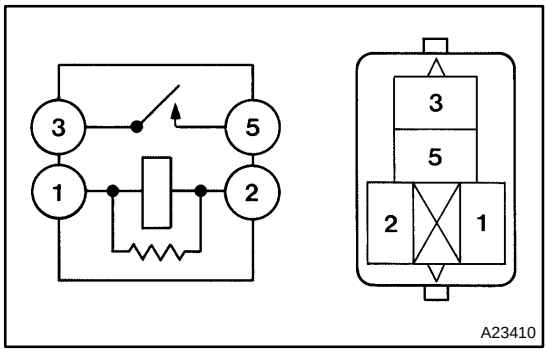

2. INSPECT EFI MAIN RELAY

(a) Using an ohmmeter, check for continuity between each terminal.

Specified condition:

Terminal No.	Specified condition
1 − 2	Continuity
3 − 5	No continuity

(b) Using an ohmmeter, check for continuity between terminals 3 and 5 when the battery voltage is applied across terminals 1 and 2.

Specified condition: Continuity

3. INSTALL EFI MAIN RELAY

FUEL CUT RPM

SF1ZH−01

INSPECTION

INSPECT FUEL CUT OFF RPM

(a) Increase the engine speed to at least 3,500 rpm.
(b) Use a sound scope to check for injector operating noise.
(c) Check that the injector operation noise stops momentarily and then resumes when the accelerator pedal is released.
Fuel cut off rpm: 2,500 rpm
Fuel return rpm: 1,200 rpm

SF1YK−01

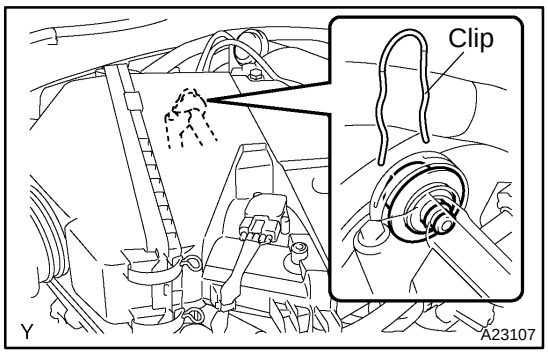

INSTALLATION

1. INSTALL FUEL PRESSURE PULSATION DAMPER

(a) Apply a light coat of spindle oil or gasoline to a new O−ring and install it to the fuel pressure pulsation damper.

(b) Install the fuel pressure pulsation damper to the fuel delivery pipe.

(c) Install the clip.

2. INSTALL V−BANK COVER

3. CHECK FOR FUEL LEAKS

FUEL PRESSURE PULSATION DAMPER

SF1YL−01

REMOVAL

1. **PREVENT GASOLINE FROM SPILLING OUT (See page SF−1)**
2. **REMOVE V−BANK COVER**

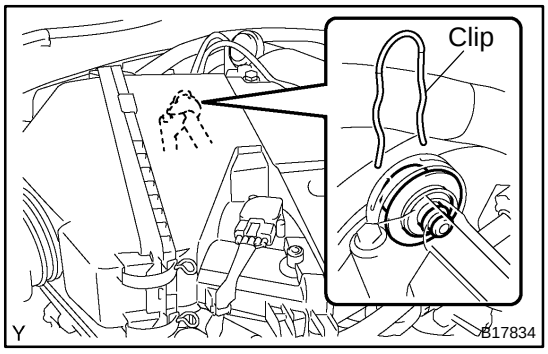

3. **REMOVE FUEL PRESSURE PULSATION DAMPER**

(a) Remove the clip.

(b) Pull out the fuel pressure pulsation damper from the fuel delivery pipe.

SF1YE−01

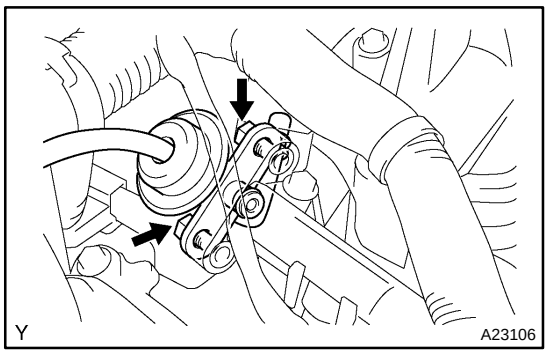

INSTALLATION

1. INSTALL FUEL PRESSURE REGULATOR

(a) Install the vacuum hose.

(b) Apply a light coat of spindle oil or gasoline to a new O−ring and install it to the fuel pressure regulator.

(c) Install the fuel pressure regulator with the 2 bolts.
Torque: 9.0 N·m (92 kgf·cm, 80 in.·lbf)

2. CONNECT FUEL PIPE NO.2

3. INSTALL AIR CLEANER (See page EM−89)

4. INSTALL V−BANK COVER

5. CHECK FOR FUEL LEAKS

FUEL PRESSURE REGULATOR

SF1YD−01

REMOVAL

1. **PREVENT GASOLINE FROM SPILLING OUT (See page SF−1)**
2. **REMOVE V−BANK COVER**
3. **REMOVE AIR CLEANER (See page EM−62)**
4. **DISCONNECT FUEL PIPE NO.2**

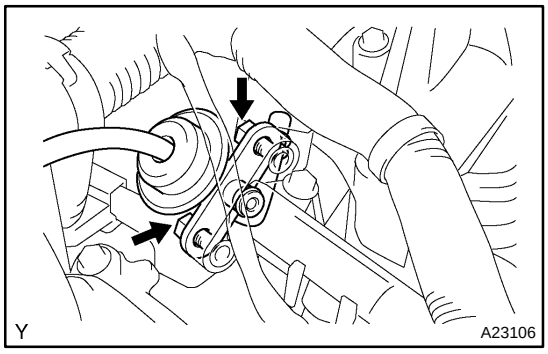

5. **REMOVE FUEL PRESSURE REGULATOR**

(a) Remove the 2 bolts and fuel pressure regulator.

(b) Remove the vacuum hose.

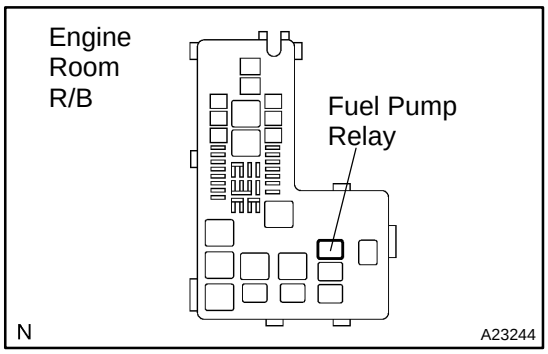

FUEL PUMP RELAY

SF1Z4−01

INSPECTION

1. REMOVE FUEL PUMP RELAY

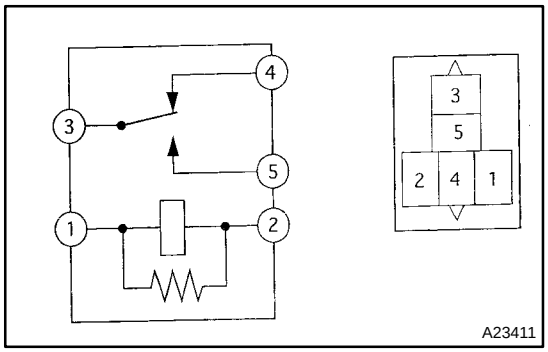

2. INSPECT FUEL PUMP RELAY

(a) Using an ohmmeter, check for continuity between each terminal.

Specified condition:

Terminal No.	Specified condition
1 − 2 3 − 4	Continuity
3 − 5	No continuity

(b) Using an ohmmeter, check for continuity between terminals 3 and 5 when the battery voltage is applied across terminals 1 and 2.

Specified condition: Continuity

3. INSTALL FUEL PUMP RELAY

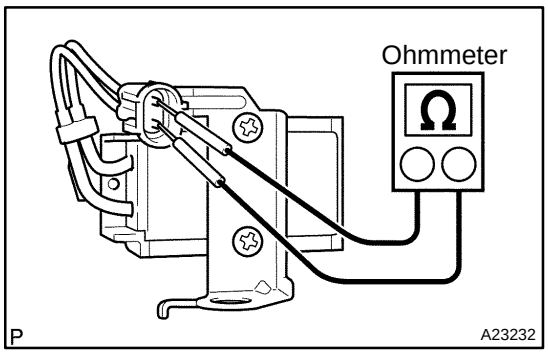

FUEL PUMP RESISTOR

SF1Z6−01

INSPECTION

INSPECT FUEL PUMP RESISTOR

Using an ohmmeter, measure the resistance between terminals.

Resistance: 0.70 to 0.76 Ω at 20°C (68°F)

FUEL TANK AND LINE

COMPONENTS

SF1YM−01

CAUTION:

- **Always use new gaskets when replacing the fuel tank or component parts.**
- **Apply the proper torque to all parts tightened.**

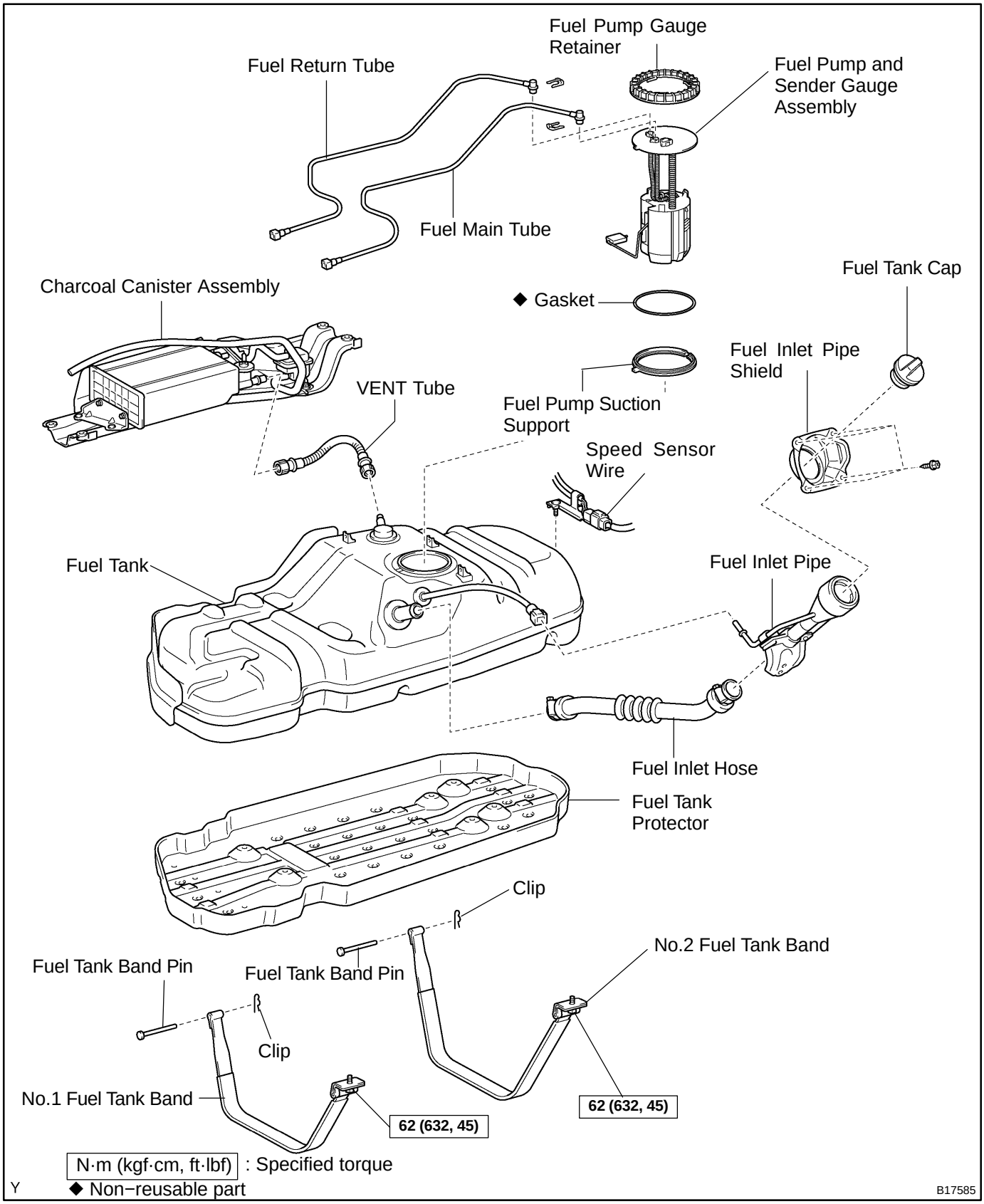

SF1YN−01

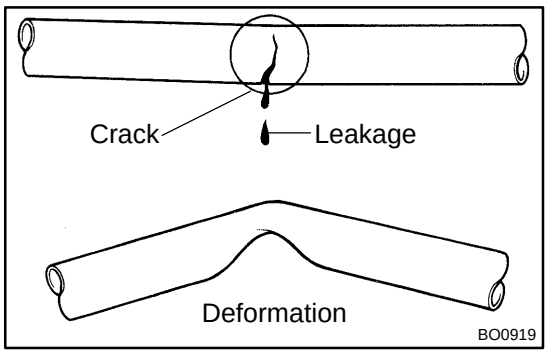

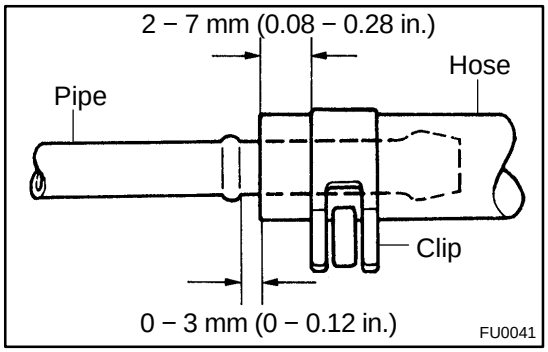

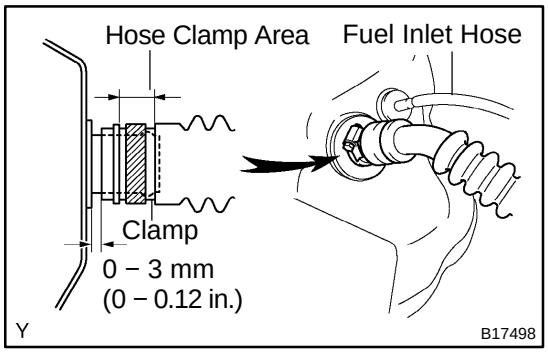

INSPECTION

INSPECT FUEL TANK AND LINE

(a) Check the fuel lines for cracks or leakage, and all connections for deformation.

(b) Check the fuel tank vapor vent system hoses and connections for looseness, sharp bends or damage.

(c) Check the fuel tank for deformation, cracks, fuel leakage or tank band looseness.

(d) Check the filler neck for damage or fuel leakage.

(e) Hose and pipe connections are as shown in the illustration.

If a problem is found, repair or replace the parts as necessary.

SF1YP−01

INSTALLATION

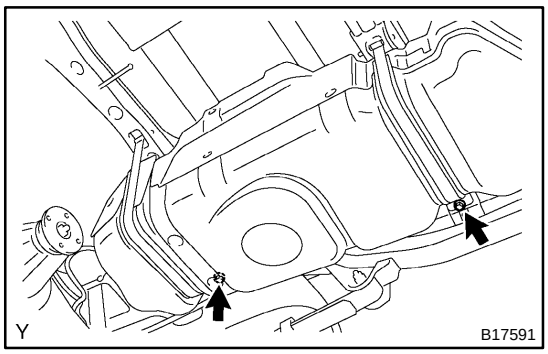

1. INSTALL FUEL PUMP ASSEMBLY (See page SF−17)

2. INSTALL FUEL TANK ASSEMBLY

(a) Set up the fuel tank on the transmission jack.

(b) Operate the transmission jack and install the fuel tank.

(c) Install the 2 fuel tank bands with the 2 bolts.
Torque: 62 N·m (632 kgf·cm, 45 ft·lbf)

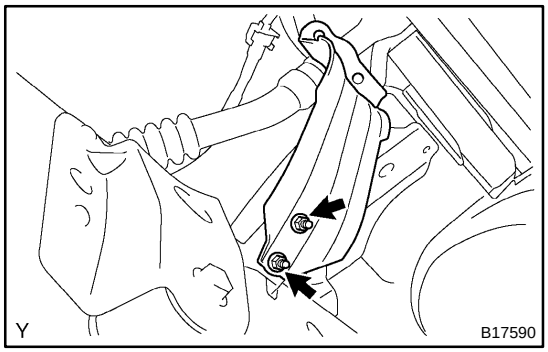

(d) Install the fuel pipe bracket to the body with the 2 nuts.
Torque: 20 N·m (204 kgf·cm, 15 ft·lbf)

3. CONNECT FUEL PUMP CONNECTOR

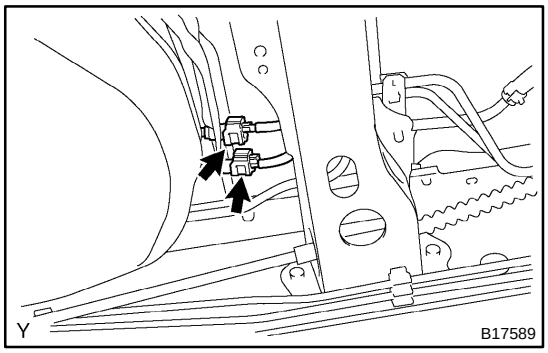

4. CONNECT FUEL MAIN TUBE AND RETURN TUBE (See page SF−1)

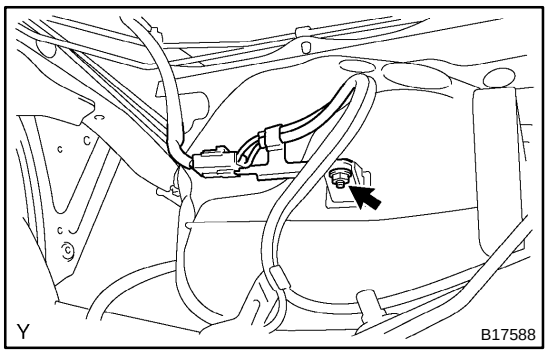

5. CONNECT SPEED SENSOR WIRE

Connect the speed sensor wire to the fuel tank with the nut.

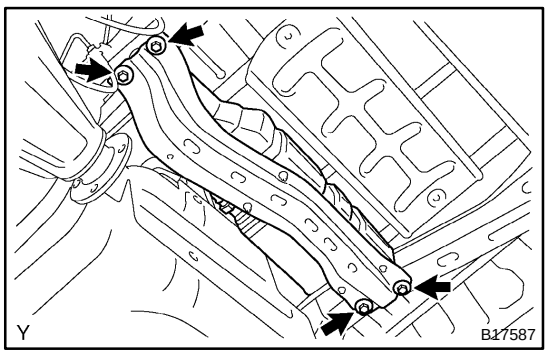

6. INSTALL CHARCOAL CANISTER ASSEMBLY

(a) Connect the pump module connector, vent hose and purge line hose to the charcoal canister.

(b) Install the charcoal canister assembly with the 4 bolts.
Torque:14.7 N·m (150 kgf·cm, 11 ft·lbf)

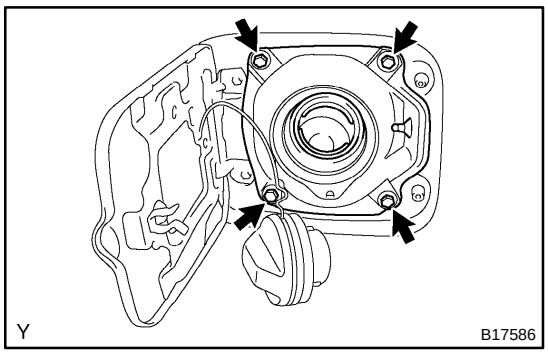

7. INSTALL FUEL INLET PIPE SHIELD

(a) Install the fuel inlet pipe shield with the 4 bolts.

(b) Install the fuel tank cap.

8. CHECK FOR FUEL LEAKS

9. INSTALL SPARE TIRE

SF1YO−01

REMOVAL

1. PREVENT GASOLINE FROM SPILLING OUT
(See page SF−1)

2. REMOVE FUEL TANK CAP

3. REMOVE FUEL INLET PIPE SHIELD

Remove the 4 bolts and fuel inlet pipe shield.

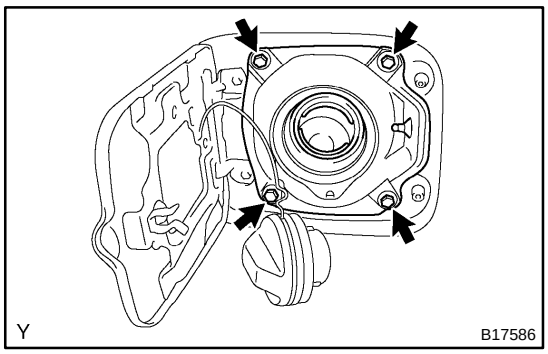

4. REMOVE CHARCOAL CANISTER ASSEMBLY

(a) Remove the 4 bolts and charcoal canister assembly.

(b) Disconnect the pump module connector, vent hose and purge line hose from the charcoal canister.

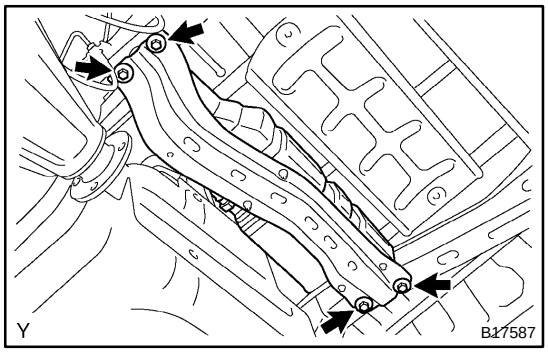

5. DISCONNECT SPEED SENSOR WIRE

Remove the nut and disconnect the speed sensor wire from the fuel tank.

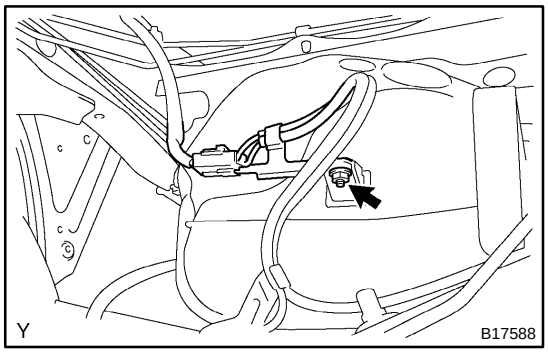

6. DISCONNECT FUEL MAIN TUBE AND RETURN TUBE
(See page SF−1)

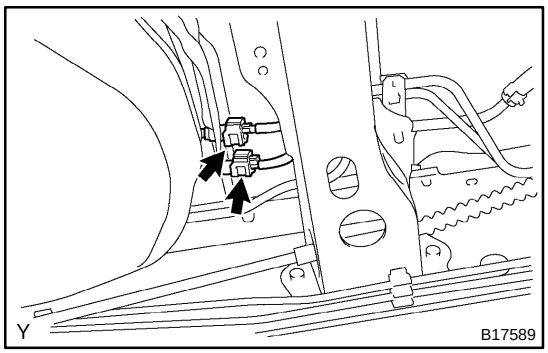

7. REMOVE FUEL TANK ASSEMBLY

(a) Set up a transmission jack under the fuel tank.

(b) Remove the 2 nuts and disconnect the fuel pipe bracket from the body.

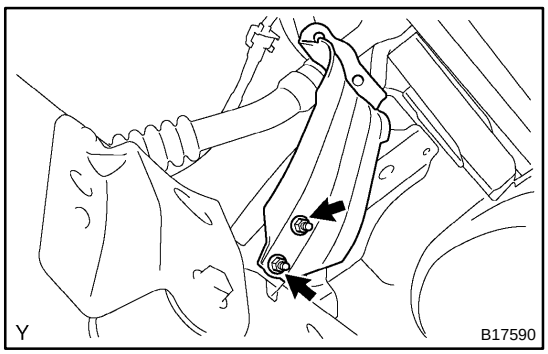

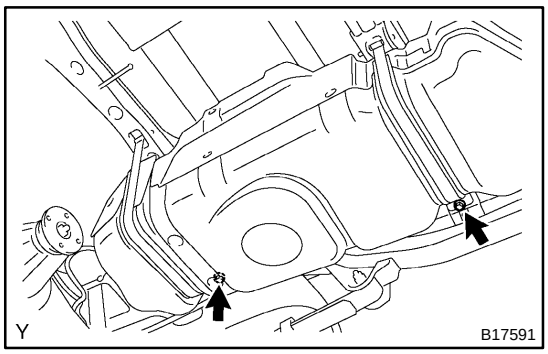

(c) Remove the 2 bolts and disconnect the 2 fuel tank bands from the fuel tank.

(d) Operate the transmission jack and remove the fuel tank.

8. REMOVE FUEL PUMP ASSEMBLY

(See page SF−9)

SF1Y7−01

COMPONENTS

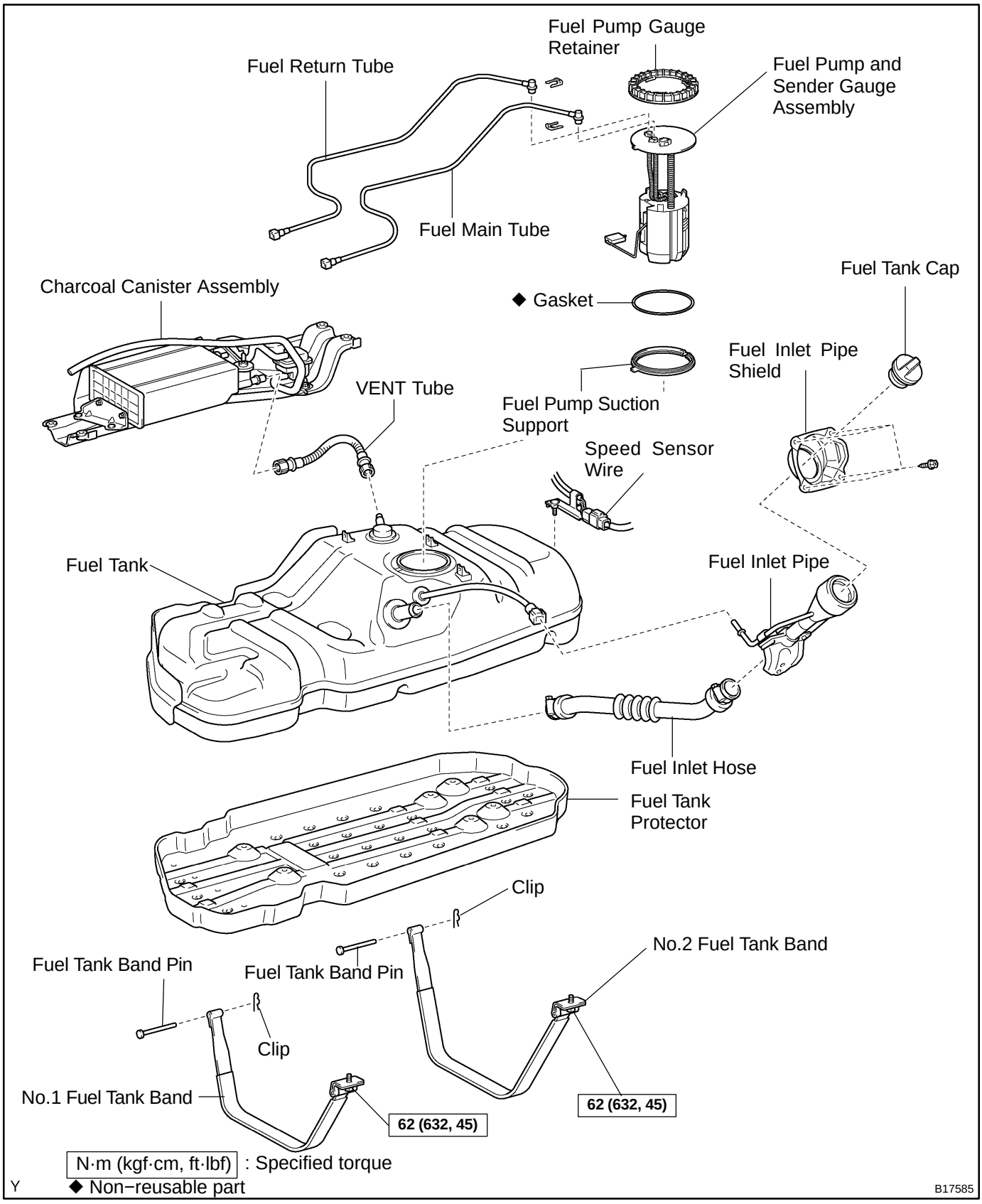

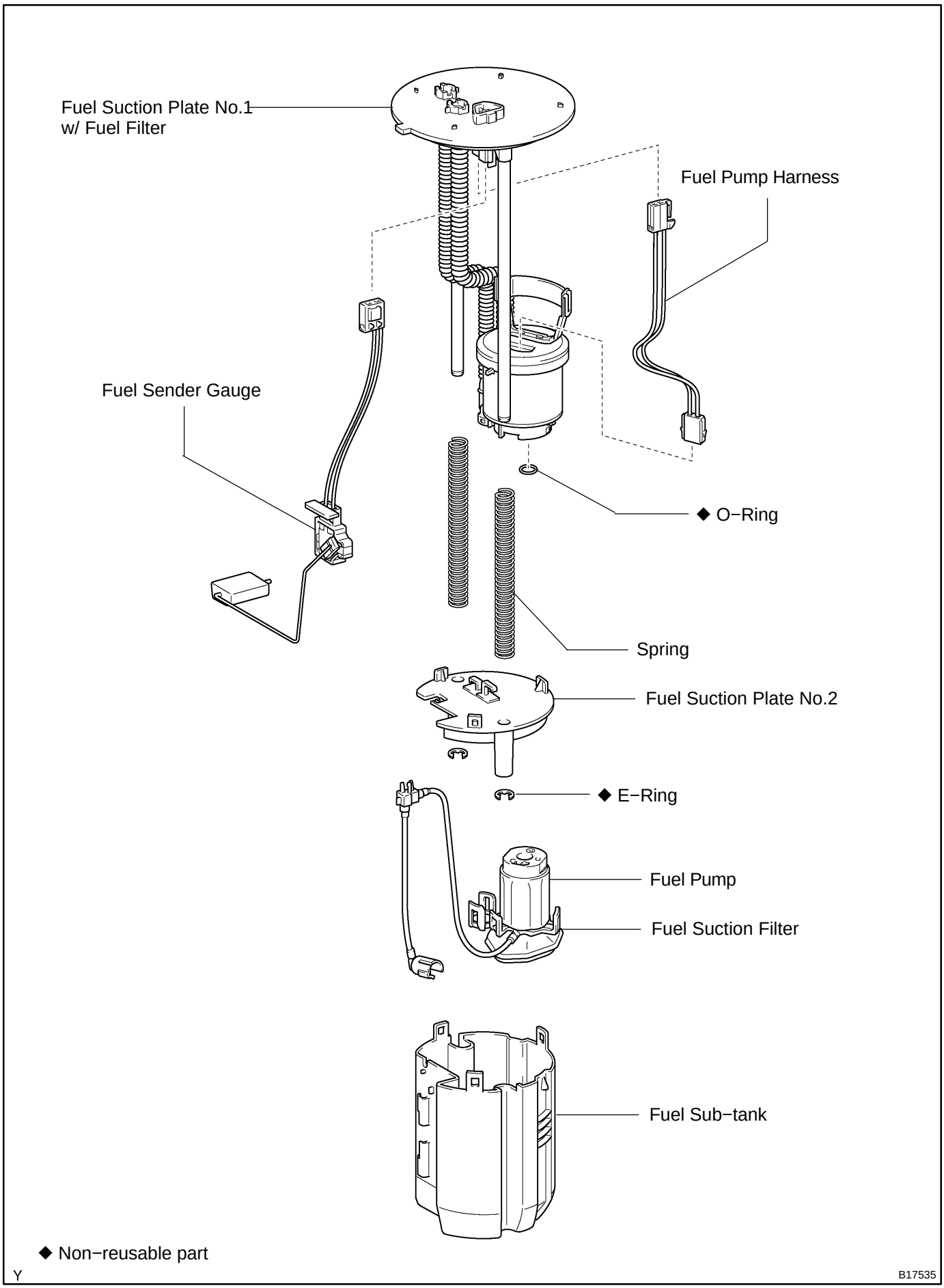
Fuel Suction Plate No.1
w/ Fuel Filter
Fuel Pump Harness
Fuel Sender Gauge
◆ O−Ring
Spring
Fuel Suction Plate No.2
◆ E−Ring
Fuel Pump
Fuel Suction Filter
Fuel Sub−tank
◆ Non−reusable part
Y
B17535

SF1Y9−01

DISASSEMBLY

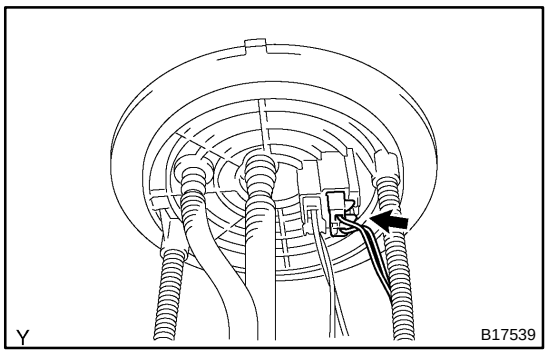

1. REMOVE FUEL SENDER GAUGE

(a) Disconnect the sender gauge connector from the fuel suction plate No.1.

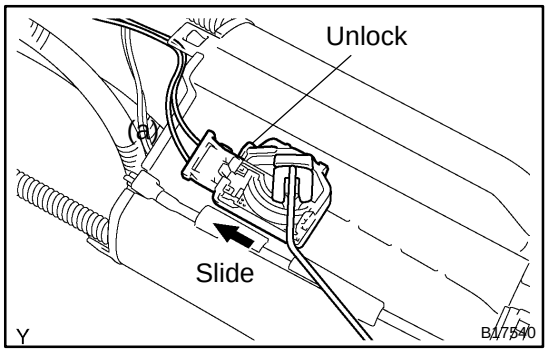

(b) Unlock the fuel sender gauge and slide to remove.

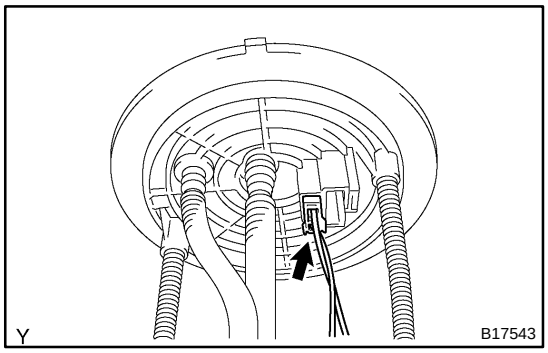

2. REMOVE FUEL SUB−TANK

(a) Disconnect the fuel pump harness connector from the fuel suction plate No.1.

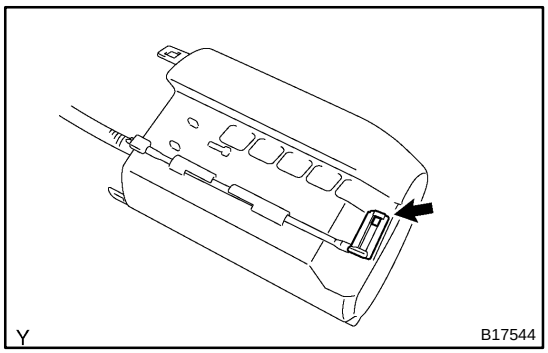

(b) Disconnect the suction filter hose from the fuel sub−tank.

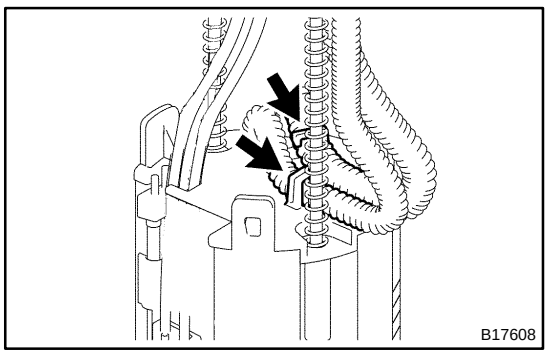

(c) Disconnect the 2 tubes from the tube clamps.

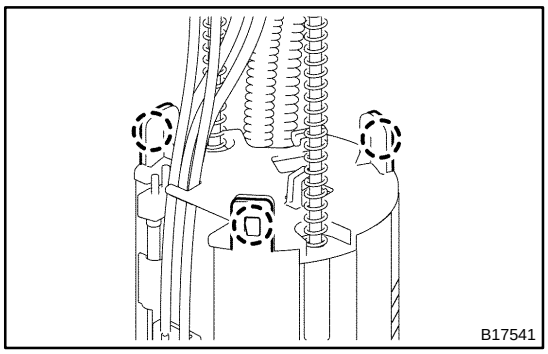

(d) Using a screwdriver with the tip wrapped in tape, disconnect the 3 snap−claws from the fuel suction support No.2.

NOTICE:

Do not damage the fuel suction plate No.2 and fuel sub−tank.

(e) Disconnect the fuel suction plate No.1 with the fuel filter assembly from the fuel sub−tank.

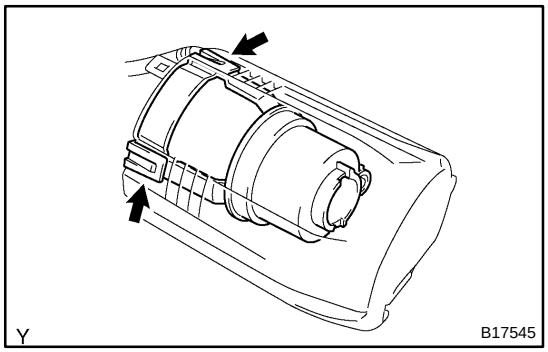

3. REMOVE FUEL FILTER WITH FUEL PUMP

(a) Using a screwdriver with the tip wrapped in tape, disconnect the 2 snap−claws from the fuel suction support.

NOTICE:

Do not damage the fuel filter assembly and fuel suction support.

(b) Remove the fuel filter assembly with fuel pump from the fuel suction support.

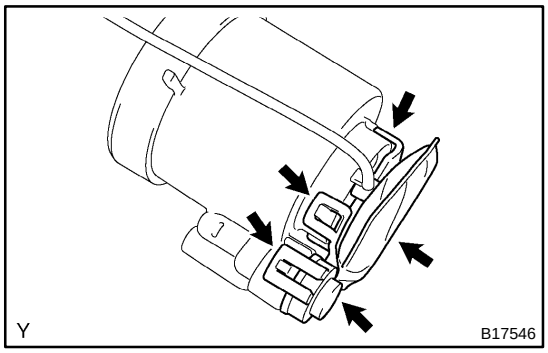

4. REMOVE FUEL PUMP

(a) Using a screwdriver with the tip wrapped in tape, disconnect the 5 snap−claws from the suction filter.

NOTICE:

Do not damage the fuel filter assembly and suction filter.

(b) Remove the fuel suction filter with fuel pump from the fuel filter.

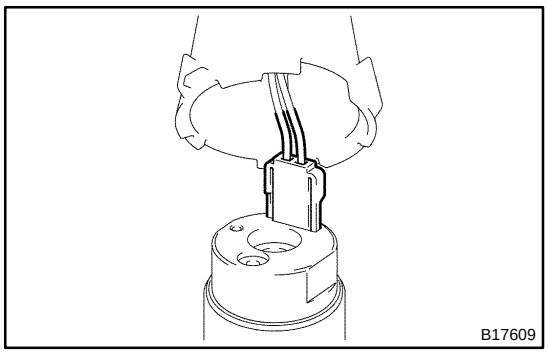

(c) Disconnect the fuel pump harness from the fuel pump.

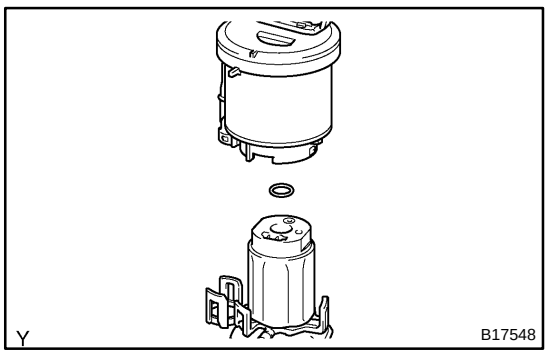

(d) Remove the O−ring from the fuel filter or fuel pump.

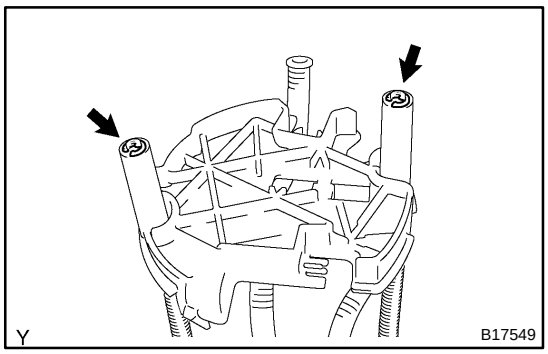

5. REMOVE FUEL SUCTION PLATE NO.2

(a) Using a screwdriver, remove the 2 E−rings from the suction plate No.2.

(b) Remove the suction plate No.2 and 2 springs from the fuel suction plate No.1.

SF1YA−01

INSPECTION

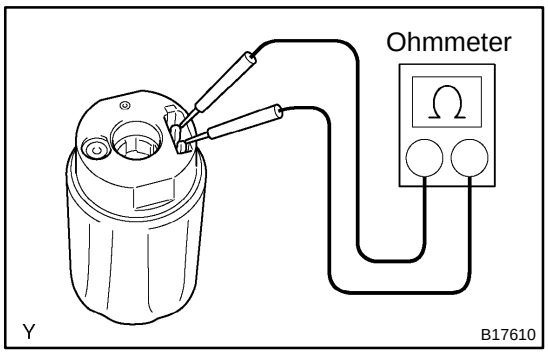

1. INSPECT FUEL PUMP RESISTANCE

Using an ohmmeter, measure the resistance between the terminals.

Resistance: 0.2 to 0.3 Ω at 20 ˚C (68 ˚F)

If the resistance is not as specified, replace the fuel pump.

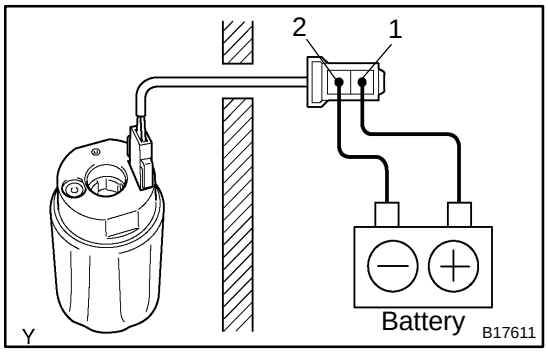

2. INSPECT FUEL PUMP OPERATION

(a) Connect the lead wire to the fuel pump.

(b) Connect the positive (+) lead from the battery to terminal 1 of the connector, and the negative (−) lead to terminal 2. Check that the fuel pump operates.

NOTICE:

- **These tests must be done quickly (within 10 seconds) to prevent the coil from burning out.**
- **Keep the fuel pump as far away from the battery as possible.**
- **Always do switching on the battery side.**

If operation is not as specified, replace the fuel pump and/or read wire.

(c) Disconnect the lead wire from the fuel pump.

SF1YC−01

INSTALLATION

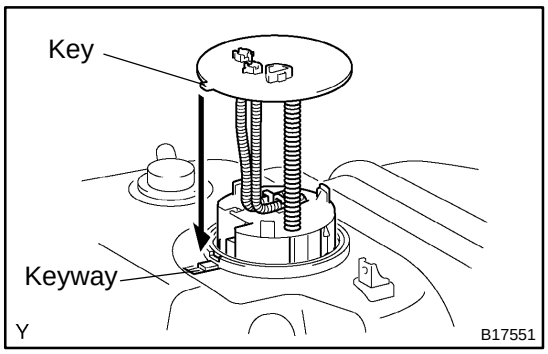

1. INSTALL FUEL PUMP ASSEMBLY

(a) Install a new gasket to the fuel tank.

(b) Install the fuel pump assembly to the fuel tank.

NOTICE:

Be careful not to bend the arm of the fuel sender gauge.

(c) Align the keyway of the fuel suction tube support with the key of the fuel suction plate No.1.

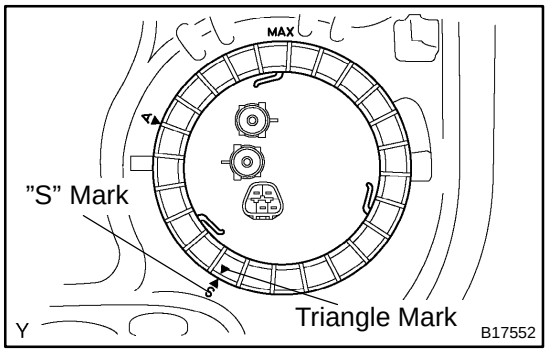

(d) Apply MP grease to the entire interior surface of the fuel pump gage retainer.

(e) Align the triangle mark on new fuel pump gauge retainer with the ”S” mark on the fuel tank while pushing down the fuel suction tube. Attach the fuel pump gage retainer to the fuel tank.

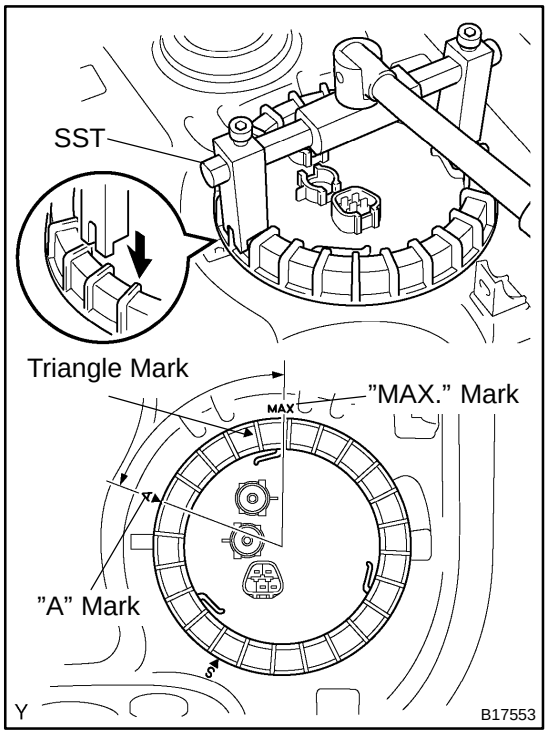

(f) Rotate the fuel pump gage retainer by hand. Use an SST to tighten the fule pump gage retainer by turning it one and a half times. The triangle mark on the fuel pump gage retainer must be positioned between the ”A” and ”MAX.” marks on the fuel tank.

SST 09808−14020 (09808−01410, 09808−01420, 09808−01430)

NOTICE:

Do not use other tools in this operation. Damage to the fuel pump gauge retainer and the fuel tank may result.

HINT:

A rib on the fuel pump gauge retainer fits into a tip of the SST.

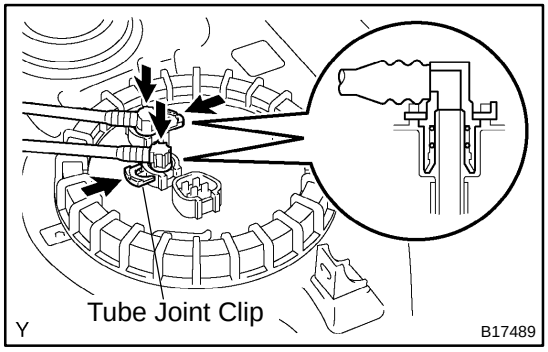

2. CONNECT FUEL SUCTION TUBE

Connect the fuel pump tube and return tube to the fuel tank with the tube joint clips.

NOTICE:

- **Check that there are no scratches or foreign objects on the connecting part.**
- **Check that the fuel tube joint is inserted securely.**
- **Check that the tube joint clip is on the collar of the fuel tube joint.**
- **After installing the tube joint clip, check that the fuel tube joint has not been pulled off.**

3. **CHECK FOR FUEL LEAKS**
4. **INSTALL FUEL TANK ASSEMBLY (See page SF−36)**

FUEL PUMP

SF1Y6−01

ON−VEHICLE INSPECTION

1. CHECK FUEL PUMP OPERATION AND FUEL LEAK

(a) When using the hand−held tester:

(1) Connect the hand−held tester to the DLC3.

(2) Turn the ignition switch to the ON position and the hand−held tester main switch ON.

NOTICE:

Do not start the engine.

(3) Enter the following menus: DIAGNOSIS / ENHANCED OBD II / ACTIVE TEST / FUEL PUMP / SPD

HINT:

Please refer to the hand−held tester operator's manual for further details.

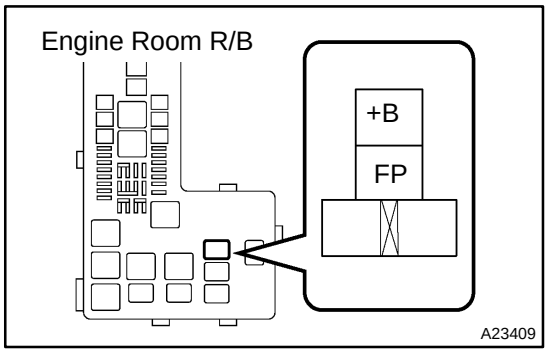

(b) When not using the hand−held tester:

(1) Remove the circuit opening relay.

(2) Using a service wire, connect terminals FP and +B of the relay block.

NOTICE:

Pay careful attention to the terminal connecting position to avoid a malfunction.

(3) Turn the ignition switch to the ON position, and check that the fuel pump operates.

NOTICE:

Do not start the engine.

(c) Check that there are no fuel leaks after performing maintenance of the fuel system.

(d) Turn the ignition switch off.

(e) Disconnect the hand−held tester from the DLC3.

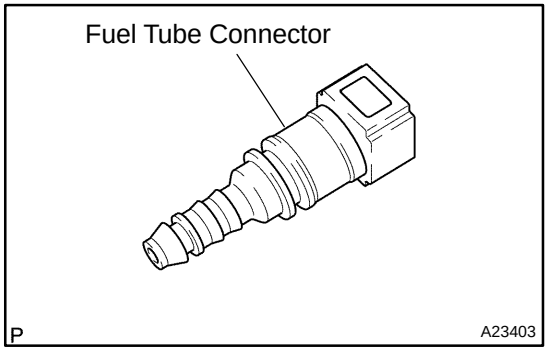

2. CHECK FUEL PRESSURE

(a) Prepare for inspection.

(1) Prepare a new fuel tube, and take the fuel tube connector out of the tube.

HINT:

Part No. 23801−31070

(b) Prevent gasoline from spilling out (See page SF−1).

(c) Disconnect the fuel pipe clamp (See page SF−1).

(d) Disconnect the fuel pipe No. 1 from the fuel main tube.

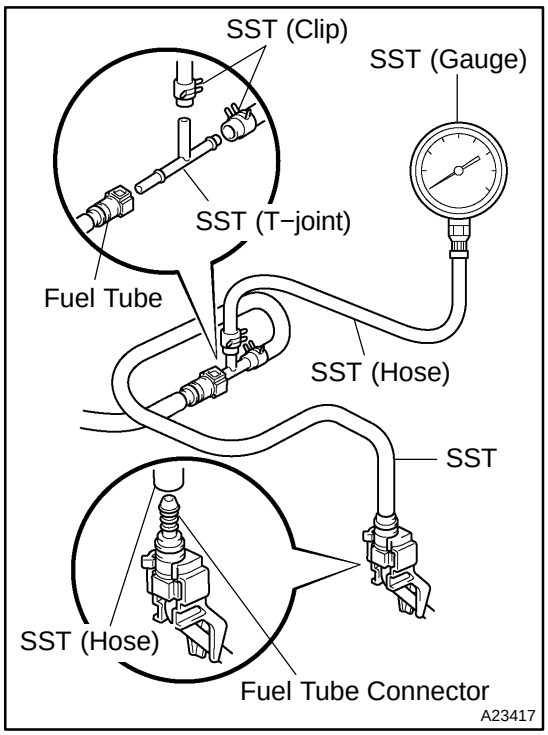

(e) Install SST (pressure gauge) as shown in the illustration by using SSTs and a fuel tube connector.
SST 09268−41047 (90467−13001, 95336−08070), 09268−45014 (09268−41200, 09268−41220, 09268−41250, 90467−13001)

(f) Wipe off any spattered gasoline.

(g) Start the engine.

(h) Measure the fuel pressure at idle.
Fuel pressure:
281 to 287 kPa (2.87 to 2.93 kgf·cm^2, 40.8 to 41.7 psi)

(i) Stop the engine.

(j) Check that the fuel pressure remains as specified for 5 minutes after the engine has stopped.
Fuel pressure:
147 kPa (1.5 kgf·cm^2, 21 psi) or more

If pressure is not as specified, check the fuel pump, pressure regulator and/or injectors.

(k) After checking the fuel pressure, disconnect the negative (−) terminal cable from the battery carefully, and remove the SST and fuel tube connector to prevent gasoline from splashing.

(l) Reconnect the fuel tube to the fuel main tube.

(m) Install the EFI fuel pipe clamp.

(n) Check for fuel leak.

SF1YB−01

REASSEMBLY

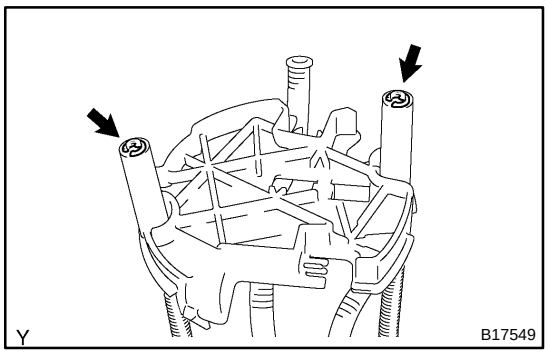

1. REMOVE FUEL SUCTION PLATE NO.2

(a) Install the 2 springs and suction plate No.2 to the suction plate No.1.

(b) Using needle−nose pliers, install 2 new E−rings to the suction plate No.2.

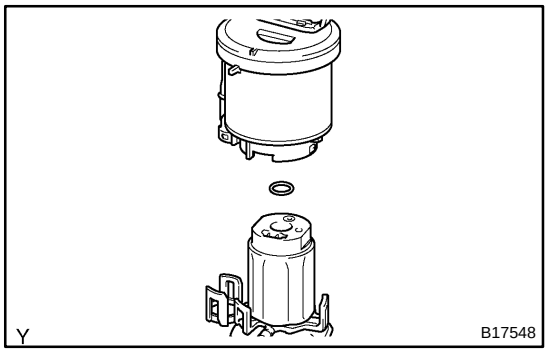

2. INSTALL FUEL PUMP

(a) Apply a light coat of gasoline or spindle oil to a new O−ring, and install it to the fuel pump.

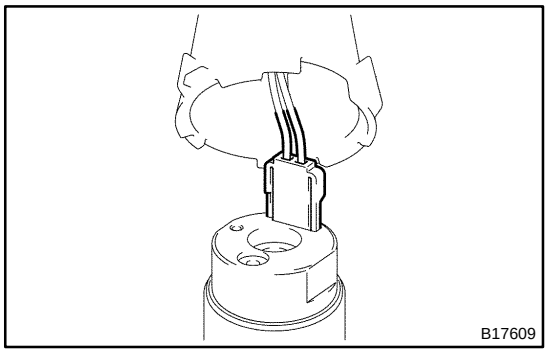

(b) Connect the fuel pump harness connector to the fuel pump.

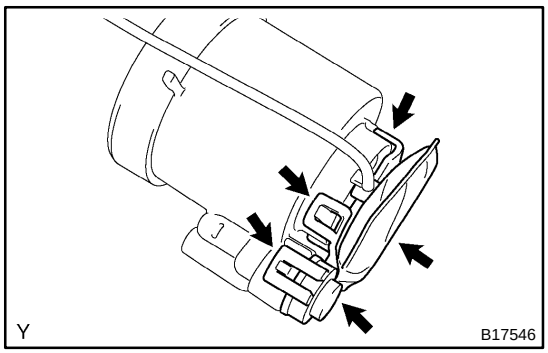

(c) Install the fuel pump with the suction filter to the fuel filter.

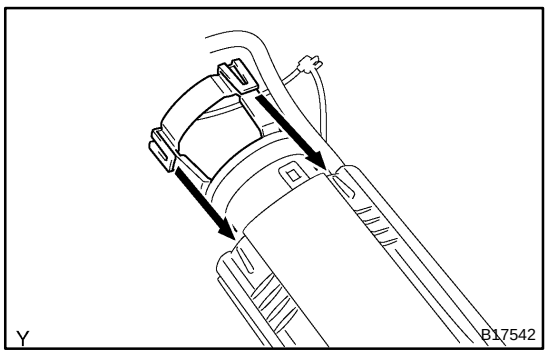

3. INSTALL FUEL FILTER

Install the fuel filter to the fuel sub−tank.

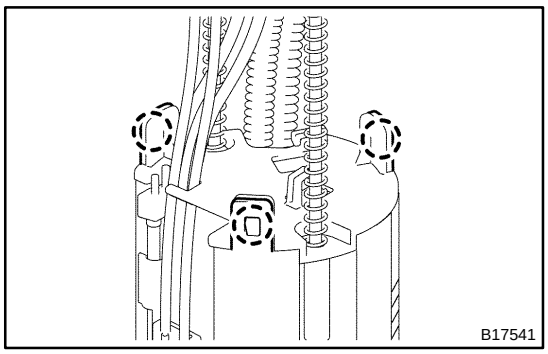

4. INSTALL FUEL SUB−TANK

(a) Connect the fuel suction plate No.2 to the fuel sub−tank with the 3 snap−claws engaged.

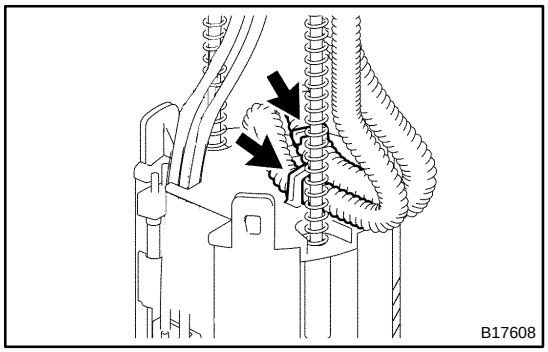

(b) Connect the 2 tubes to the tube clamps.

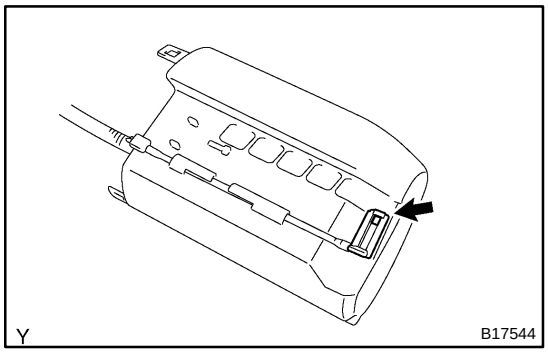

(c) Connect the suction filter hose to the fuel sub−tank.

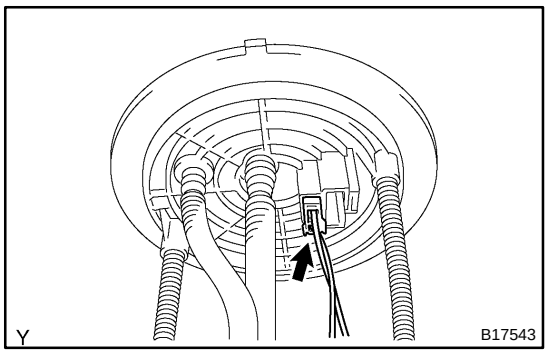

(d) Connect the fuel pump harness connector to the fuel suction plate No.1.

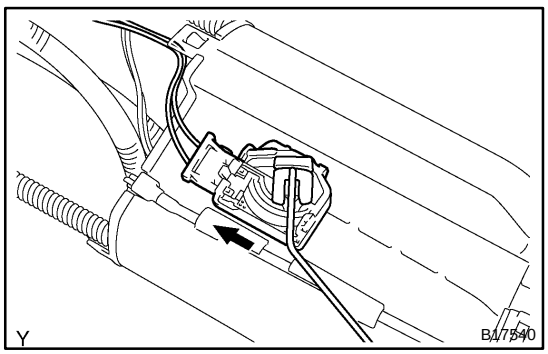

5. INSTALL FUEL SENDER GAUGE

(a) Install the fuel sender gauge to the fuel suction support.

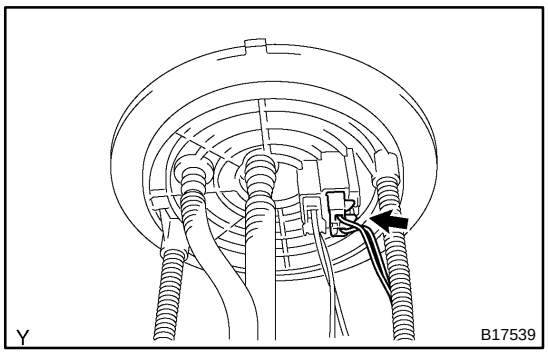

(b) Connect the sender gauge connector to the fuel suction plate No.1.

SF1Y8−01

REMOVAL

1. REMOVE FUEL TANK ASSEMBLY (See page SF−33)

2. DISCONNECT FUEL SUCTION TUBE

Remove the 2 tube clips, and pull out the 2 fuel tubes.

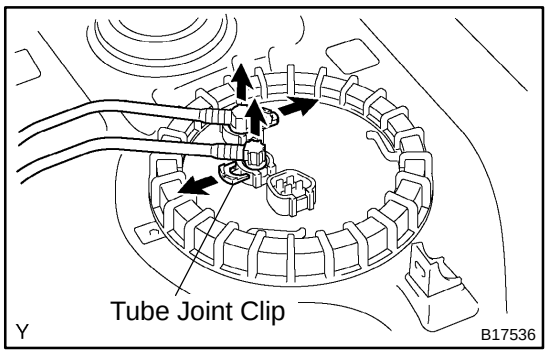

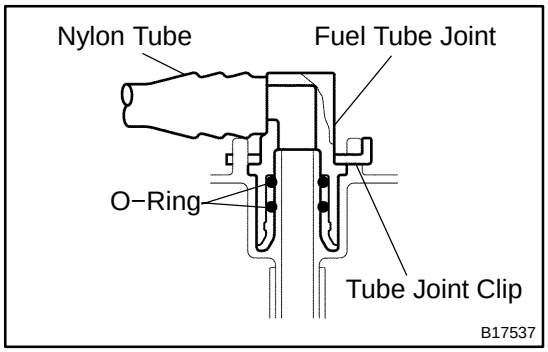

NOTICE:

- **Before this operation, check the connector for dirt, mud or other contamination. Clean if necessary.**
- **Be careful of mud. The connector's O−ring, which seals the pipe and connector, is easily contaminated.**
- **Do not use any tool in this operation.**
- **Do not bend or twist the nylon tube. Protect the connector by covering it with a plastic bag.**
- **When the pipe and connector are stuck, push and pull the connector to release and pull the connector out carefully.**

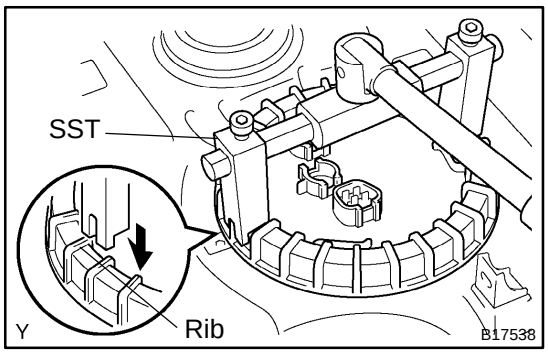

3. REMOVE FUEL PUMP ASSEMBLY

(a) Using SST, loosen the fuel pump gauge retainer.

SST 09808−14020 (09808−01410, 09808−01420, 09808−01430)

HINT:

A rib on the fuel pump gauge retainer fits into a tip of the SST.

(b) Remove the fuel pump gauge retainer.

(c) Remove the fuel suction tube.

NOTICE:

Be careful not to bend the arm of the fuel sender gauge.

(d) Remove the gasket from the fuel tank.

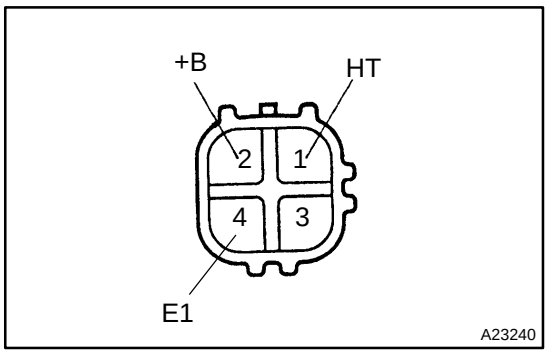

HEATED OXYGEN SENSOR

SF1ZD−01

INSPECTION

INSPECT HEATED OXYGEN SENSOR (BANK1, BANK2 OXYGEN SENSOR)

Using an ohmmeter, measure the resistance between the terminals.

Resistance:

Terminal No.	Resistance
1 (HT) ⇔ 2 (+B)	5 to 10 Ω at 20 °C (68 °F)
1 (HT) ⇔ 4 (E1)	No Continuity

If the resistance is not as specified, replace the sensor.

SF1YG−01

COMPONENTS

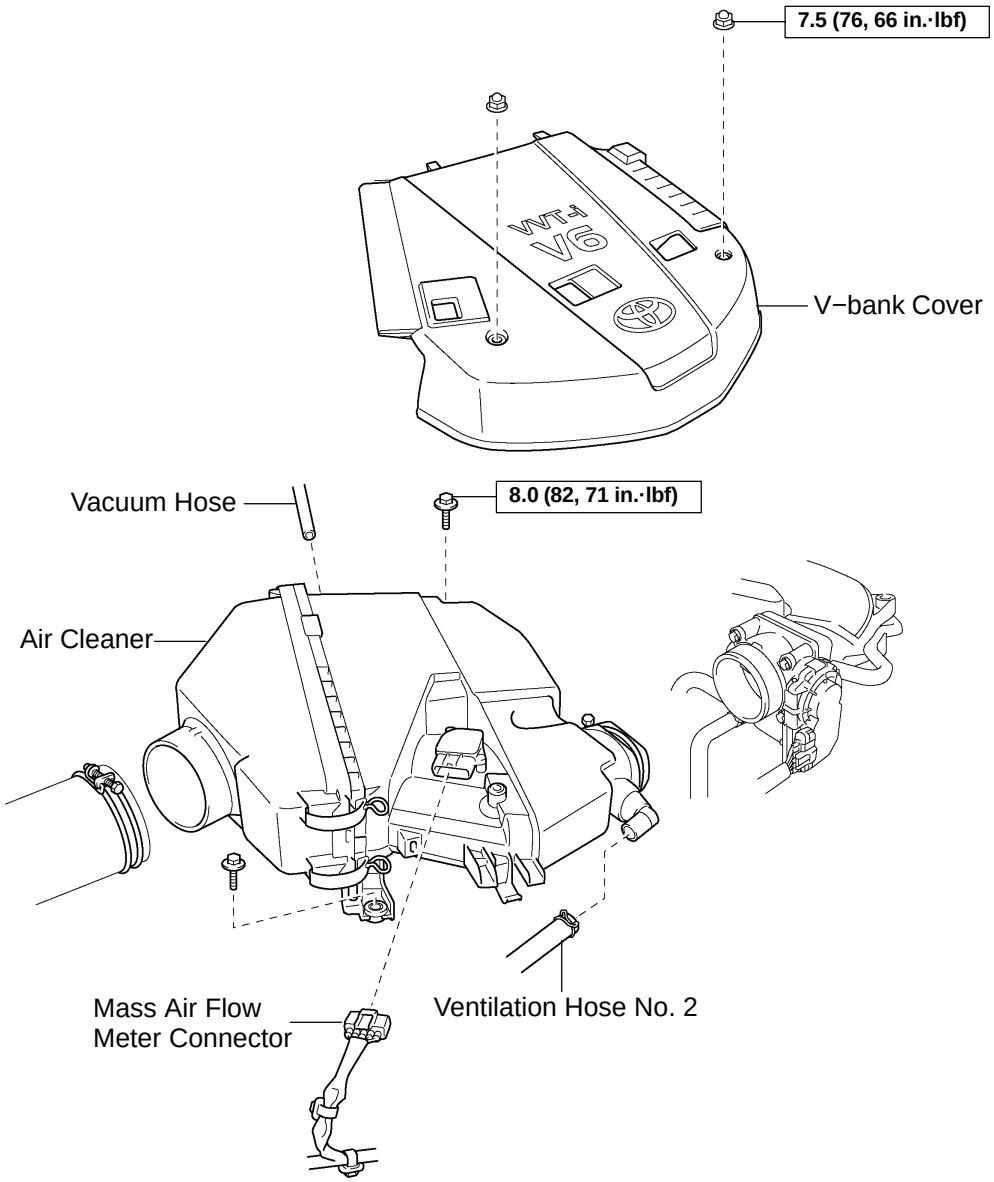

N·m (kgf·cm, ft·lbf) : Specified torque

Y

A23082

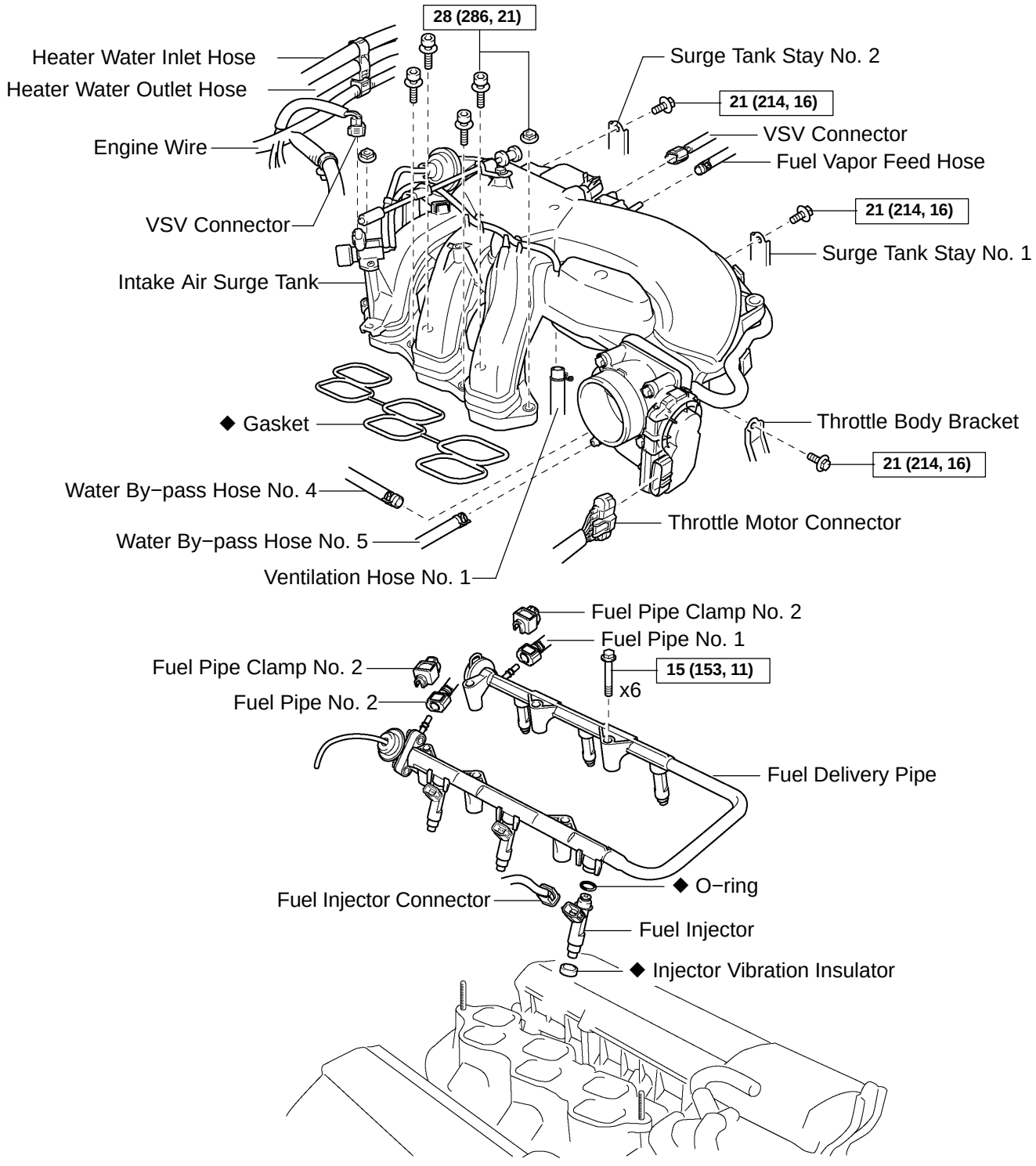

N·m (kgf·cm, ft·lbf): Specified torque

◆ Non−reusable part

Y

A23094

SF1YI−01

INSPECTION

1. INSPECT INJECTOR INJECTION

CAUTION:

Keep the injector clear of sparks during the test.

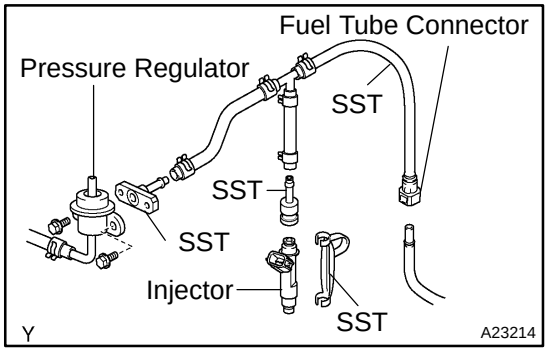

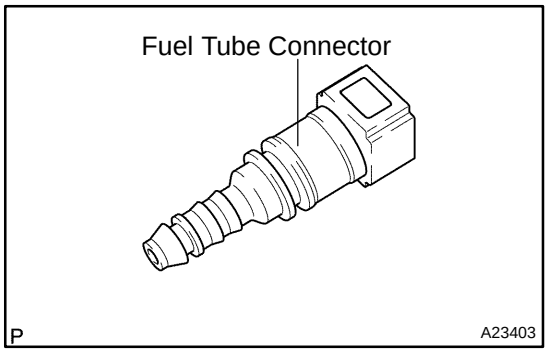

(a) Obtain a new No.1 fuel pipe (part No. 23801−31070) and take the fuel tube connector out of the pipe.

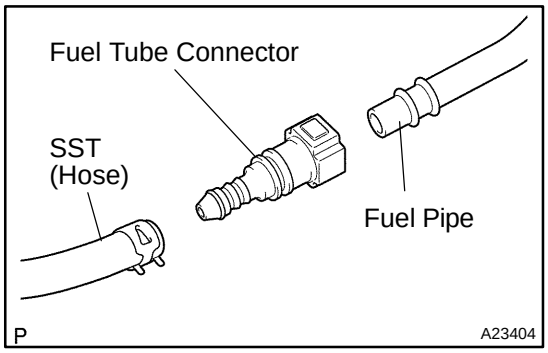

(b) Install the fuel tube connector to the SST (hose), then connect the tube connector and fuel pipe.
SST 09268−41047 (95336−08070)

CAUTION:

Connect the fuel tube connector (quick type) after observing the precautions.

(c) Remove the pressure regulator from the delivery pipe.

(d) Install the O−ring to the fuel inlet of the pressure regulator.

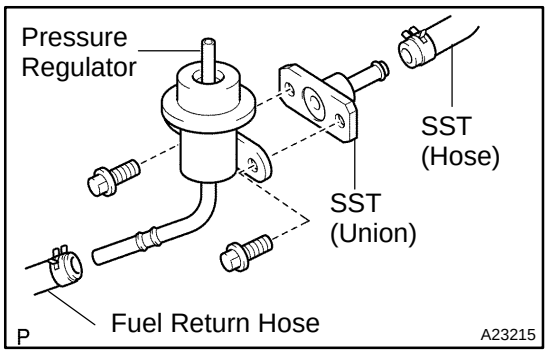

(e) Connect the SST (hose) to the fuel inlet of the pressure regulator with another SST (union) and the 2 bolts.
SST 09268−41047 (95336−08070, 09268−41091)
Torque: 9.0 N·m (92 kgf·cm, 80 in.·lbf)

(f) Connect the fuel return hose to the fuel outlet of the pressure regulator.

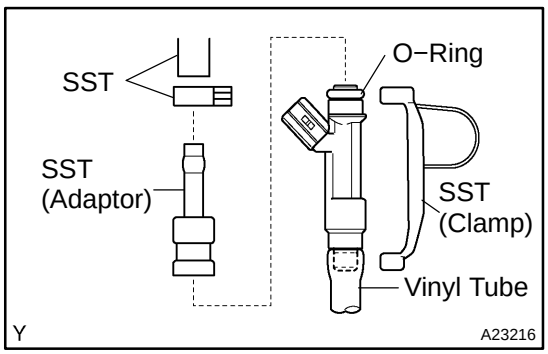

(g) Install the O−ring to the injector.

(h) Connect SSTs (adaptor and hose) to the injector, and hold the injector and union with SST (clamp).
SST 09268−41047 (09268−41140, 09268−41400, 95336−08070)

(i) Put the injector into a graduated cylinder.

CAUTION:

Install a suitable vinyl tube onto the injector to prevent gasoline from splashing out.

(j) Operate the fuel pump (see page SF−5).

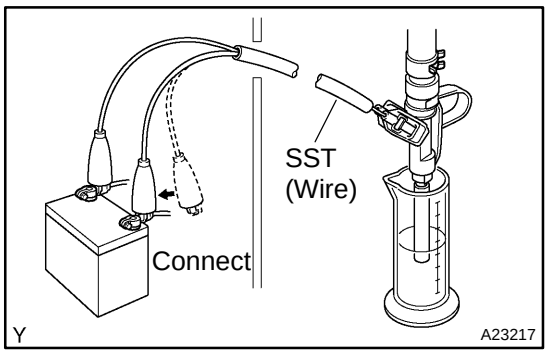

(k) Connect the SST (wire) to the injector and battery for 15 seconds, and measure the injection volume with a graduated cylinder. Test each injector 2 or 3 times.

SST 09842−30080

Volume: 76 to 91 cm^3 (4.6 to 5.5 cu in.) per 15 seconds

Difference between each injector:

15 cm^3 (0.9 cu in.) or less

If the injection volume is not as specified, replace the injector.

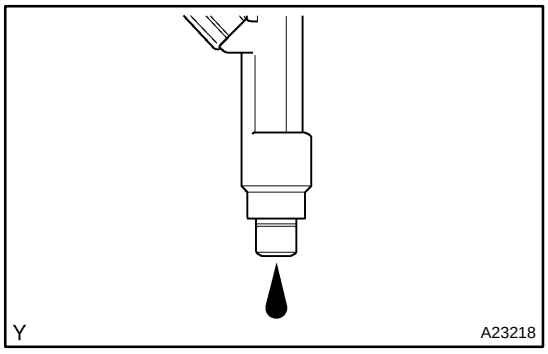

2. INSPECT LEAKAGE

Under the above conditions, disconnect the tester probes of the SST (wire) from the battery and check the fuel leakage from the injector.

SST 09842−30080

Fuel drop: 1 drop or less per 12 minutes

SF1YJ−01

INSTALLATION

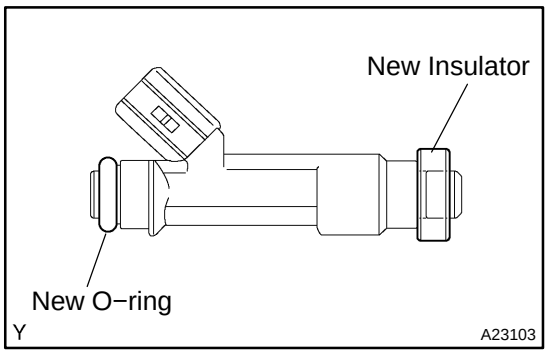

1. INSTALL FUEL INJECTOR

(a) Install a new insulator to the fuel injector.

(b) Apply a light coat of spindle oil or gasoline to a new O−ring and install it to the fuel injector.

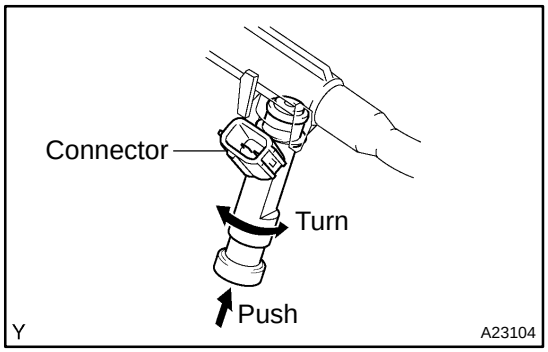

(c) While turning the fuel injector to the left and right, install it to the fuel delivery pipe.

(d) Position the fuel injector connector facing out from the fuel delivery pipe.

(e) Apply the above procedures to the other fuel injectors.

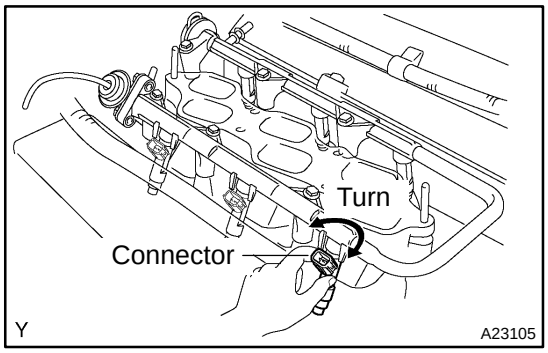

2. INSTALL FUEL DELIVERY PIPE

(a) Place the fuel delivery pipe together with the 6 fuel injectors on the intake manifold.

(b) Temporarily install the 6 bolts which are used to hold the fuel delivery pipe to the intake manifold.

(c) Check that the fuel injectors rotate smoothly.

HINT:

If the fuel injectors do not rotate smoothly, the probable cause is incorrect installation of O−rings. Replace the O−ring of the injector that does not rotate smoothly.

(d) Position the fuel injector connector facing out from the fuel delivery pipe.

(e) Tighten the 6 bolts which are used to hold the fuel delivery pipe to the intake manifold.

Torque: 15 N·m (153 kgf·cm, 11 ft·lbf)

(f) Connect the 6 fuel injector connectors.

3. CONNECT FUEL PIPE NO.2

(a) Push in the tube connector to the pipe, then tube connector makes a ”click” sound.

NOTICE:

- **Check if there is any damage or foreign objects on the connected part of the fuel pipe.**
- **After connecting, check if the pipe and connector are securely connected by pulling them.**

(b) Install the fuel pipe clamp.

4. CONNECT FUEL PIPE NO.1

(a) Push in the tube connector to the pipe, then tube connector makes a ”click” sound.

NOTICE:

- **Check if there is any damage or foreign objects on the connected part of the fuel pipe.**
- **After connecting, check if the pipe and connector are securely connected by pulling them.**

(b) Install the fuel pipe clamp.

5. INSTALL INTAKE AIR SURGE TANK (See page EM−62)

6. INSTALL AIR CLEANER (See page EM−89)

7. INSTALL V−BANK COVER

8. ADD ENGINE COOLANT

9. CHECK FOR FUEL LEAKS

INJECTOR

SF1YF−01

ON−VEHICLE INSPECTION

1. REMOVE V−BANK COVER

2. REMOVE AIR CLEANER (See page EM−62)

3. REMOVE INTAKE AIR SURGE TANK (See page EM−62)

4. INSPECT INJECTOR RESISTANCE

(a) Disconnect the 6 injector connectors.

(b) Using an ohmmeter, measure the resistance between the terminals.

Resistance: 11.6 to 12.4 Ω at 20˚C (68˚F)

If the resistance is not as specified, replace the injector.

(c) Reconnect the 6 injector connectors.

5. INSTALL INTAKE AIR SURGE TANK (See page EM−89)

6. INSTALL AIR CLEANER (See page EM−89)

7. INSTALL V−BANK COVER

SF1YH−01

REMOVAL

1. PREVENT GASOLINE FROM SPILLING OUT (See page SF−1)
2. DRAIN ENGINE COOLANT
3. REMOVE V−BANK COVER
4. REMOVE AIR CLEANER (See page EM−62)
5. REMOVE INTAKE AIR SURGE TANK (See page EM−89)

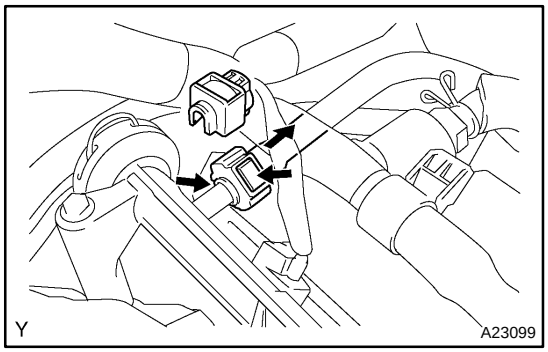

6. DISCONNECT FUEL PIPE NO.1

(a) Remove the fuel pipe clamp.

(b) Pinch the tube connector then pull out the fuel pipe.

NOTICE:

- **Check if there is any dirt around the connector before this work, because the quick connector has an O−ring to seal the fuel pipe and fuel delivery pipe. Clean dirt away if necessary.**
- **Do not use any tool in this work.**
- **Do not bend or twist the nylon tube.**
- **Keep the plug free from foreign objects.**
- **To protect the fuel pipe, cover it with a plastic bag after checking.**
- **When the fuel pipe and fuel delivery pipe are stuck, pinch the nylon tube with fingers, and turn it carefully to free and then disconnect the fuel pipe.**

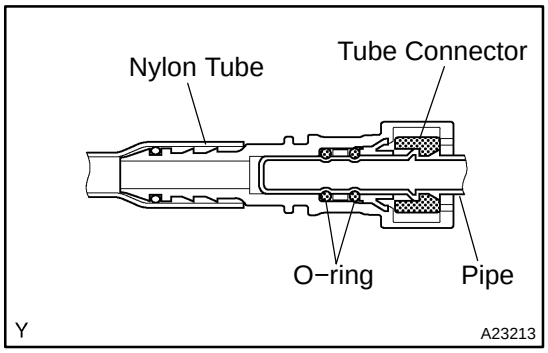

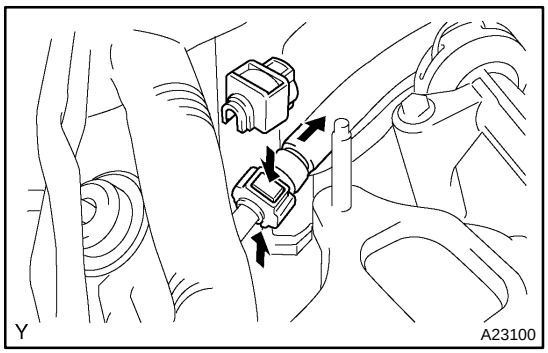

7. DISCONNECT FUEL PIPE NO.2

(a) Remove the fuel pipe clamp.

(b) Pinch the tube connector and then pull out the fuel pipe.

NOTICE:

- **Check if there is any dirt around the connector before this work, because the quick connector has an O−ring to seal the fuel pipe and fuel delivery pipe. Clean dirt away if necessary.**
- **Do not use any tool in this work.**
- **Do not bend or twist the nylon tube.**
- **Keep the plug free from foreign objects.**
- **To protect the fuel pipe, cover it with a plastic bag after checking.**
- **When the fuel pipe and fuel pressure regulator are stuck, pinch the nylon tube with fingers, and turn it carefully to free and then disconnect the fuel pipe.**

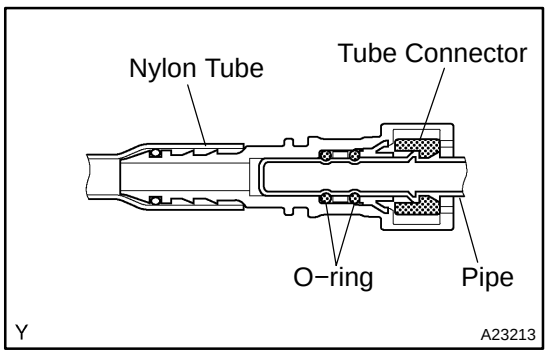

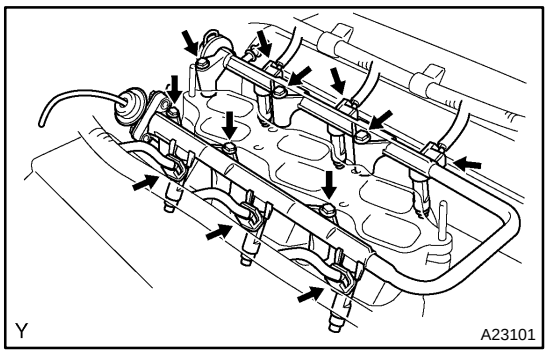

8. REMOVE FUEL DELIVERY PIPE

(a) Disconnect the 6 fuel injector connectors.

(b) Remove the 6 bolts and fuel delivery pipe together with the 6 fuel injectors.

NOTICE:

Be careful not to drop the injectors when removing the fuel delivery pipe.

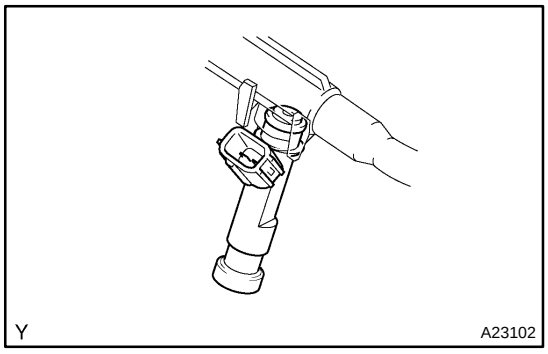

9. REMOVE FUEL INJECTOR

(a) Remove the 6 fuel injectors from the fuel delivery pipe.

(b) Remove the O−ring and injector vibration insulator from each fuel injector.

SF1ZA−01

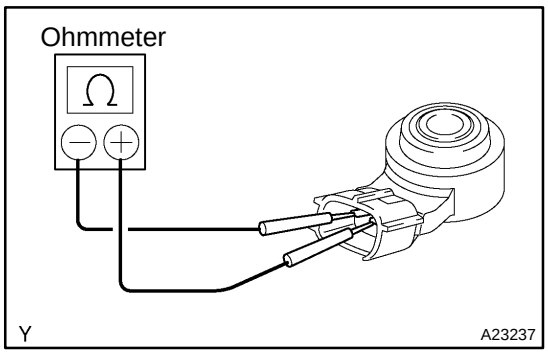

INSPECTION

1. INSPECT KNOCK SENSOR

Using an ohmmeter, measure the resistance between terminals.

Resistance: 120 to 280 kΩ at 20 °C (68 °F)

HINT:

If the resistance is not as specified, replace the sensor.

SF1ZB−01

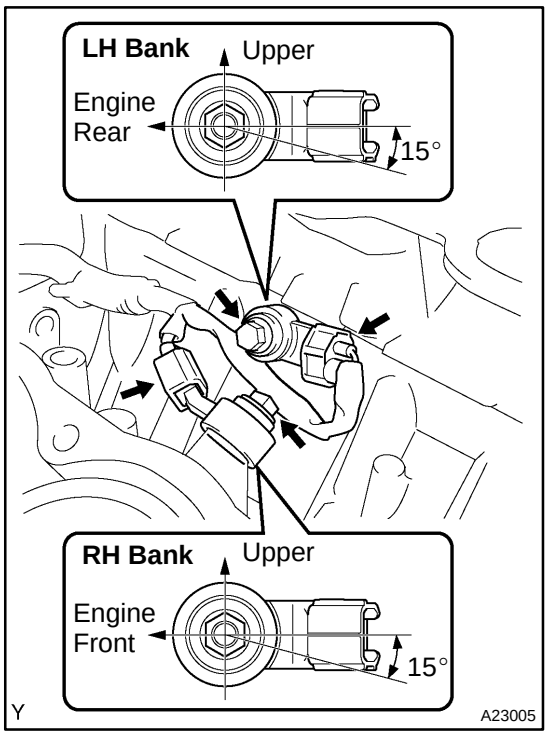

INSTALLATION

1. INSTALL KNOCK SENSOR

(a) Install the 2 knock sensors with the 2 bolts so that the center of the sensor comes within the range of 15° from the bolt center as shown in the illustration.
Torque: 20 N·m (204 kgf·cm, 15 ft·lbf)

(b) Connect the 2 knock sensor connectors.

2. INSTALL WATER OUTLET PIPE NO.1

(a) Install the water outlet pipe with the 3 bolts.
Torque: 9.0 N·m (92 kgf·cm, 80 in.·lbf)

(b) Install the 4 wire harness clamps.

3. CONNECT HEATER WATER INLET HOSE

4. INSTALL CYLINDER HEAD (See page EM−89)

KNOCK SENSOR

SF1Z9−01

REMOVAL

1. REMOVE CYLINDER HEAD (See page EM−62)

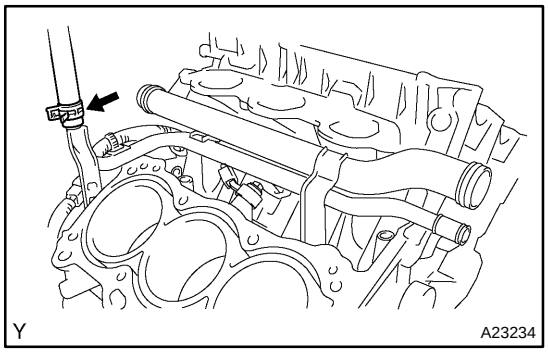

2. DISCONNECT HEATER WATER INLET HOSE

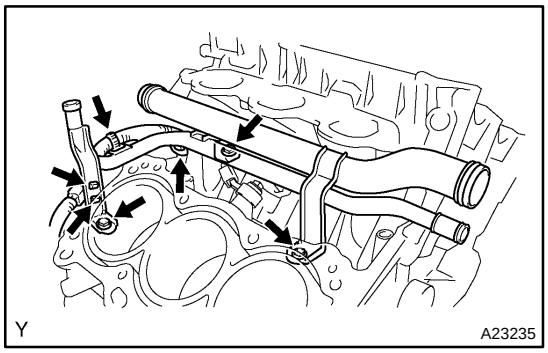

3. REMOVE WATER OUTLET PIPE NO.1

(a) Remove the 4 wire harness clamps.

(b) Remove the 3 bolts and water outlet pipe.

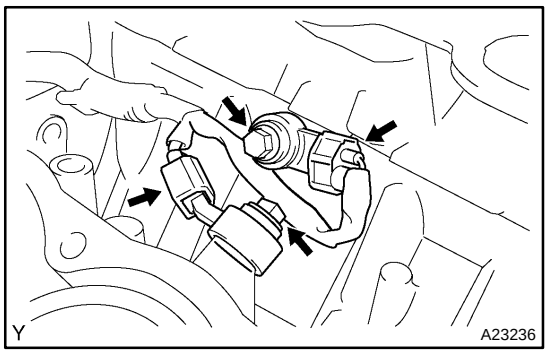

4. REMOVE KNOCK SENSOR

(a) Disconnect the 2 knock sensor connectors.

(b) Remove the 2 bolts and 2 knock sensors.

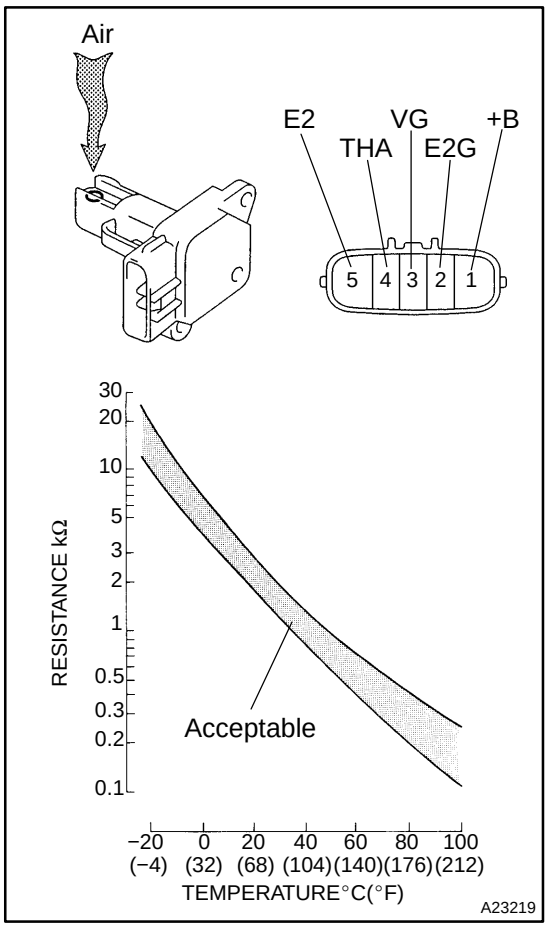

MASS AIR FLOW (MAF) METER

SF1YQ−01

INSPECTION

1. INSPECT OUTPUT VOLTAGE

(a) Apply battery voltage across terminals 1 (+B) and 2 (E2G).

(b) Connect the positive (+) tester probe to terminal 3 (VG), and the negative (−) tester prove to terminal 2 (E2G).

(c) Blow air into the MAF meter, and check if the voltage fluctuates.

2. INSPECT RESISTANCE

Using an ohmmeter, measure the resistance between terminals 4 (THA) and 5 (E2).

Resistance:

13.6 to 18.4 kΩ at −20°C (−4°F)

2.21 to 2.69 kΩ at 20°C (68°F)

0.49 to 0.67 kΩ at 60°C (140°F)

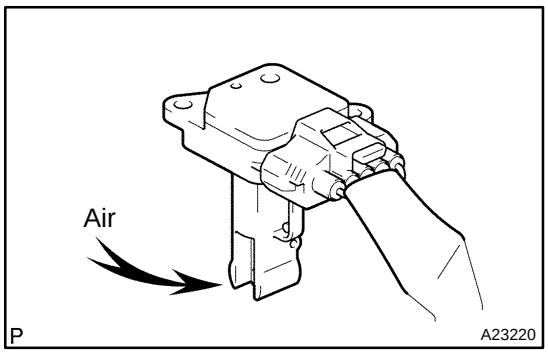

3. INSPECT MASS AIR FLOW METER

(a) If using a hand−held tester:

(1) Connect the hand−held tester to the DLC3.

(2) Turn the ignition switch to the ON position.

(3) Enter the following menus: DIAGNOSIS / ENHANCED OBD II / DATA LIST / MAF

(4) Blow air into the MAF meter, and check that the air flow value of the CURRENT DATA changes.

If operation is not as specified, check the MAF meter (see page DI−98) as well as the wiring and the ECM.

(b) If not using a hand−held tester:

(1) Turn the ignition switch to the ON position.

(2) Connect the positive tester probe of the voltmeter to terminal VG of the ECM and the negative tester probe of the voltmeter to terminal E2G of the ECM.

(3) Blow air into the air flow meter, and check if the voltage fluctuates.

If operation is not as specified, check the MAF meter (see page DI−98), the wiring and the ECM.

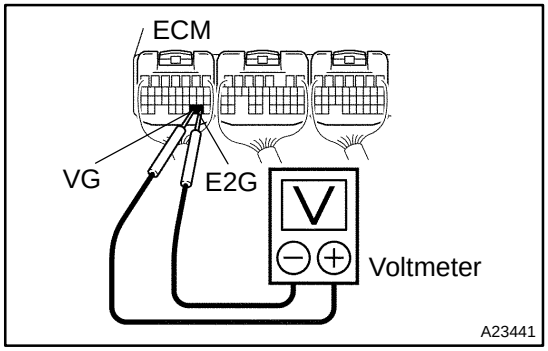

SFI SYSTEM

PRECAUTION

SF1Y5−01

HINT:

All DTCs output from the computer will be erased when the negative (−) terminal cable is removed from the battery. Therefore, if necessary, read the DTCs before removing the negative (−) terminal cable from the battery.

1. BEFORE WORKING ON FUEL SYSTEM, DISCONNECT NEGATIVE (−) TERMINAL CABLE FROM BATTERY

2. DO NOT SMOKE OR WORK NEAR FLAME WHEN WORKING ON THE FUEL SYSTEM

3. KEEP GASOLINE AWAY FROM RUBBER OR LEATHER PARTS

4. MAINTENANCE PRECAUTIONS

(a) In the event of engine misfire, these precautions should be taken.
  (1) Check that the battery terminals are properly connected.
  (2) After repair work, check that the ignition coil terminals and all other ignition system lines are reconnected securely.
  (3) When cleaning the engine compartment, be especially careful to protect the electrical system from water.

(b) Precautions when handling the oxygen sensor and A/F sensor.
  (1) Do not drop the oxygen sensor or A/F sensor or hit them against another object.
  (2) Do not allow the sensor to come into contact with water.

5. IF VEHICLE IS EQUIPPED WITH MOBILE RADIO SYSTEM (HAM, CB, ETC.)

If the vehicle is equipped with a mobile communication system, refer to the precaution in the IN section.

6. AIR INDUCTION SYSTEM

(a) Separation of the engine oil dipstick, oil filler cap, PCV hose, etc. may cause the engine to be out of tune.

(b) Disconnection, looseness or cracks in the parts of the air induction system between the throttle body and cylinder head will result in air suction and cause the engine to be out of tune.

7. ELECTRONIC CONTROL SYSTEM

(a) Before removing SFI wiring connectors, terminals, etc., first disconnect the power by either turning the ignition switch off or disconnecting the negative (−) terminal cable from the battery.

HINT:
Always check for diagnostic trouble codes before disconnecting the negative (−) terminal cable from the battery.

(b) When installing the battery, be especially careful to correctly connect the positive (+) and negative (−) cables.
(c) Do not apply severe impact to the parts during removal or installation. Handle all SFI parts carefully, especially the ECM.
(d) Be careful during troubleshooting as there are numerous transistor circuits, and even slight terminal contact can cause further trouble.
(e) Do not open the ECM cover.
(f) When inspecting in rainy weather, take care to prevent an intrusion of water. Also, when washing the engine compartment, prevent water from getting on the SFI parts and wiring connectors.
(g) Parts should be replaced as an assembly.
(h) Care should be taken when pulling out and inserting wiring connectors.
    (1) Release the lock and pull out the connector, pulling on the connectors.
    (2) Fully insert the connector and check that it is locked.

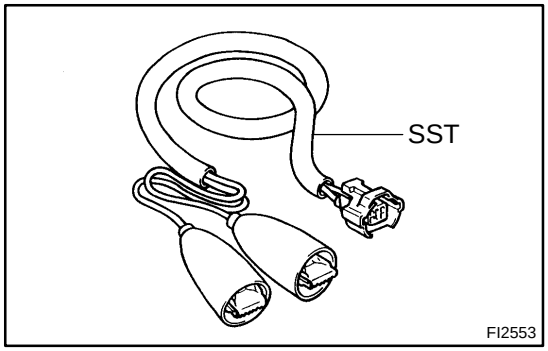

(i) Use SST for inspection or test of the injector or its wiring connector.
SST 09842−30070

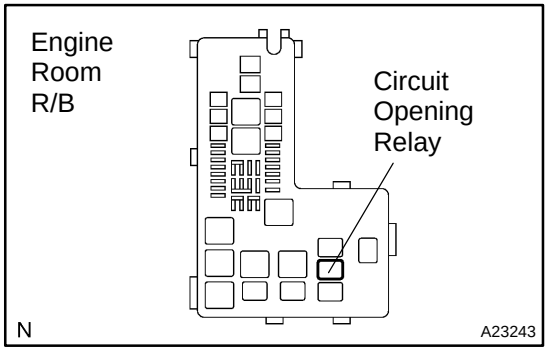

8. FUEL SYSTEM

(a) When disconnecting the high fuel pressure line, a large amount of gasoline will spill out. Be sure to observe the following procedures:
    (1) Remove the circuit opening relay.
    (2) Start the engine. After the engine has stopped on its own, turn the ignition switch off.

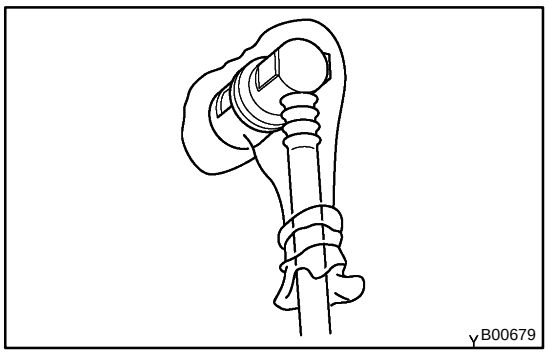

(3) Put a container under the connecting part of the pressure line.
(4) Slowly loosen the connection.
(5) Disconnect the connection.
(6) Plug the connection with a rubber plug.
(7) Install the circuit opening relay.

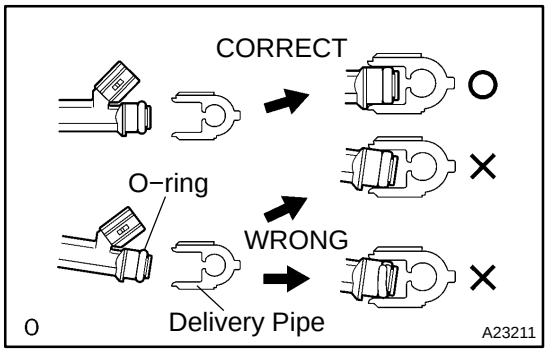

(b) Observe the following precautions when removing and installing the injectors.
(1) Never reuse the O−ring.
(2) When placing a new O−ring on the injector, take care not to damage it in any way.
(3) Coat a new O−ring with spindle oil or gasoline before installing. Never use engine oil, gear oil or brake fluid.

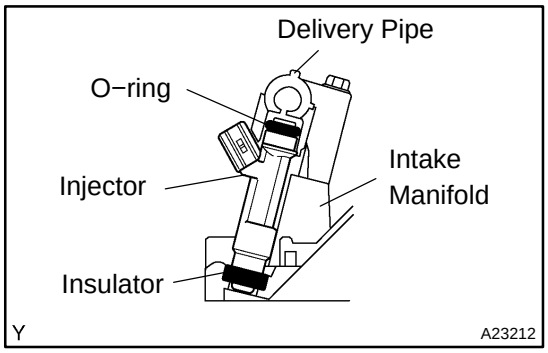

(c) Install the injector to the delivery pipe and lower intake manifold as shown in the illustration.

NOTICE:
Before installing the injector, apply spindle oil or gasoline where the delivery pipe or cylinder head contacts the O−ring of the injector.

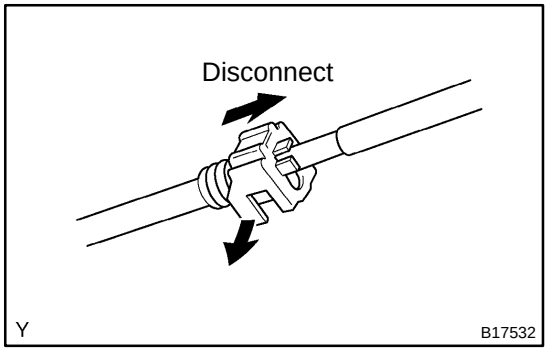

(d) Observe the following when disconnecting the fuel tube connector:
(1) Check if there is any dirt in the pipe and around the connector before disconnecting the fuel tube connector. If necessary, clean the dirt away.
(2) Disconnect the fuel pipe clamp from the connector.

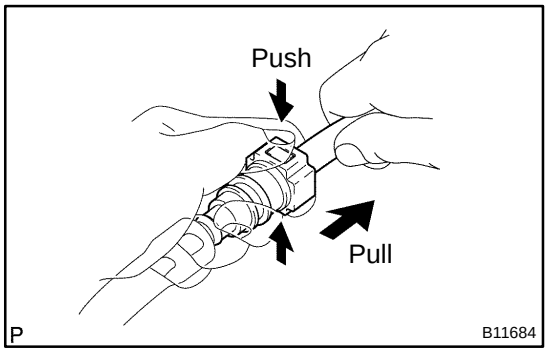

(3) Be sure to disconnect them by hand.
(4) When the connector and the pipe are stuck, push and pull the connector. Then disconnect and pull it out. Do not use any tools at this time.
(5) Check if there is any dirt or other foreign matter on the seal surface of the disconnected pipe. If necessary, clean the dirt away.
(6) Do not damage the disconnected pipe and connector and prevent intrusion of foreign objects by covering them with a plastic bag.

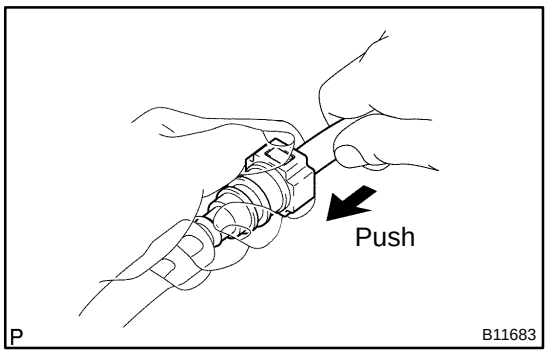

(e) Observe the following when connecting the fuel tube connector:
(1) Check if there is any damage or foreign objects in the connected part of the pipe.
(2) Match the axis of the connector with the axis of the pipe, and push into the connector until a ”click” sound is heard. If the connection is tight, apply a small amount of fresh engine oil on the tip of the pipe.

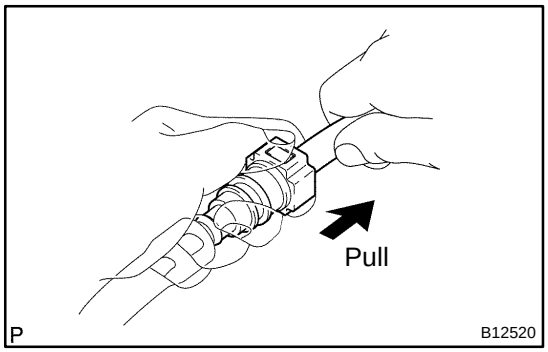

(3) After finishing the connection, pull the pipe and the connector to ensure it is secure.
(4) Check to make sure no fuel leak is present.

If the result is not as specified, repair or replace.

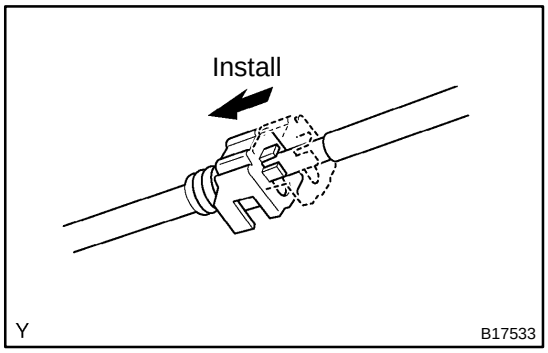

(5) Install the fuel pipe clamp to the connector.
(6) Check to make sure no fuel leak is present.

If the result is not as specified, repair or replace.

SF1YS−01

COMPONENTS

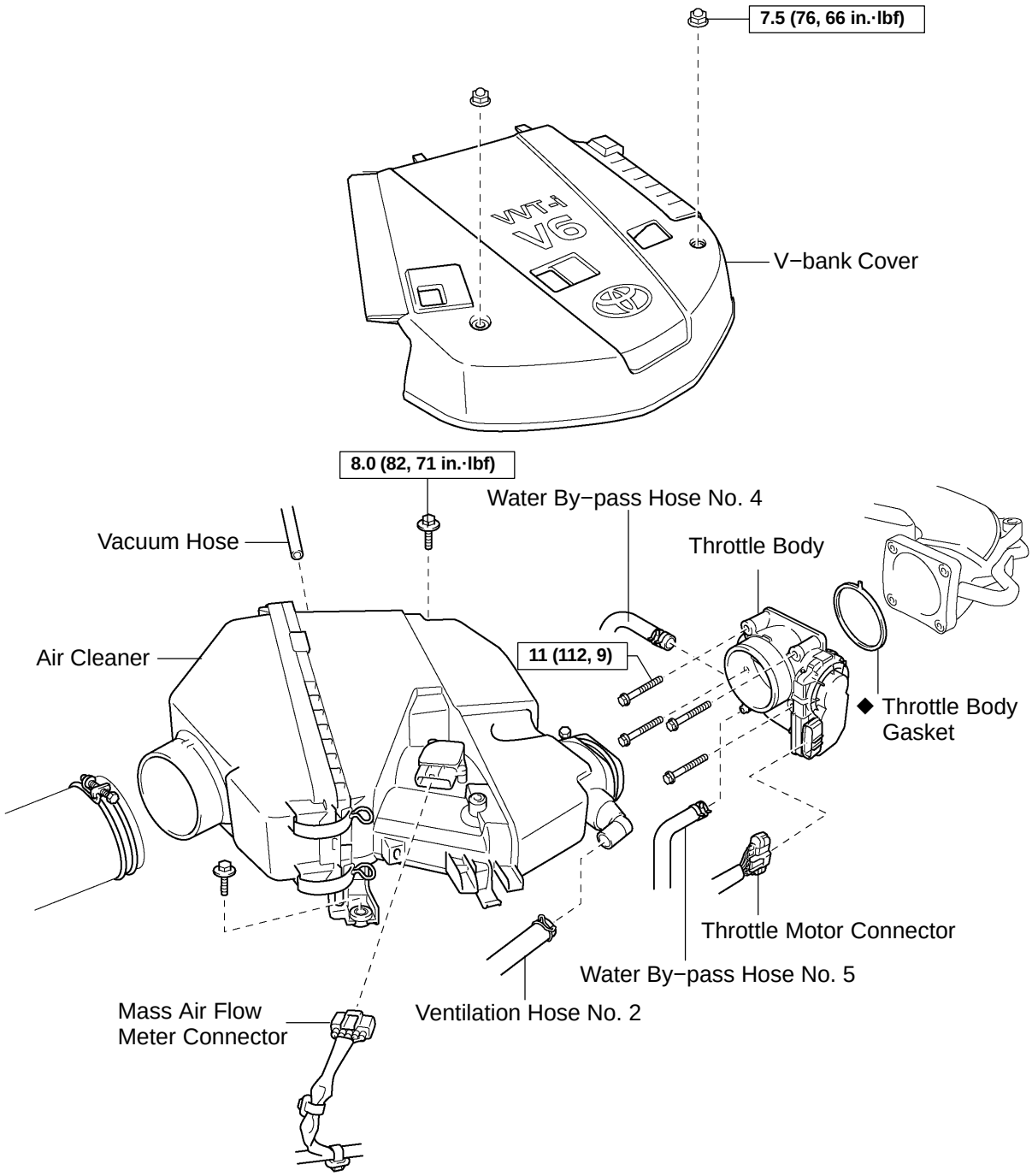

N·m (kgf·cm, ft·lbf): Specified torque

◆ Non−reusable part

A23223

SF1YU−01

INSTALLATION

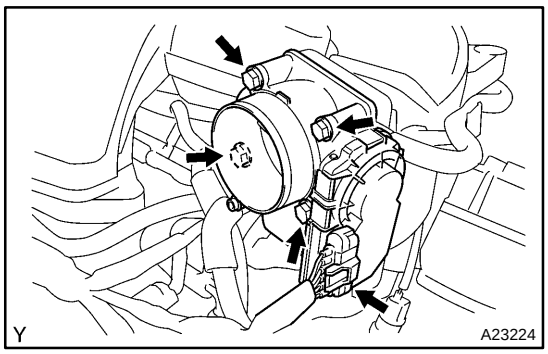

1. INSTALL THROTTLE BODY

(a) Install a new gasket and the throttle body w/ motor with the 4 bolts.

Torque: 11 N·m (112 kgf·cm, 9 ft·lbf)

(b) Connect the throttle motor connector.

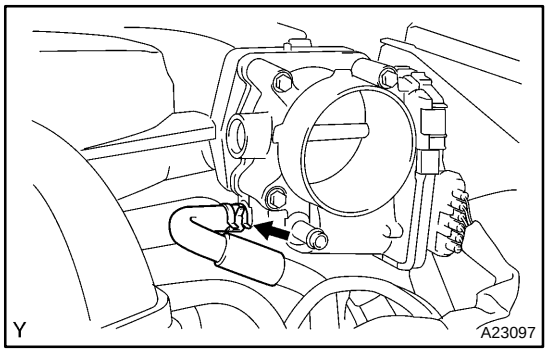

2. CONNECT WATER BY−PASS HOSE NO.4

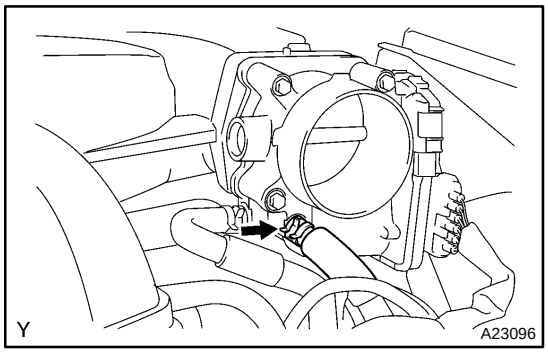

3. CONNECT WATER BY−PASS HOSE NO.5

4. INSTALL AIR CLEANER (See page EM−89)

5. INSTALL V−BANK COVER

6. ADD ENGINE COOLANT

7. CHECK FOR ENGINE COOLANT LEAKS

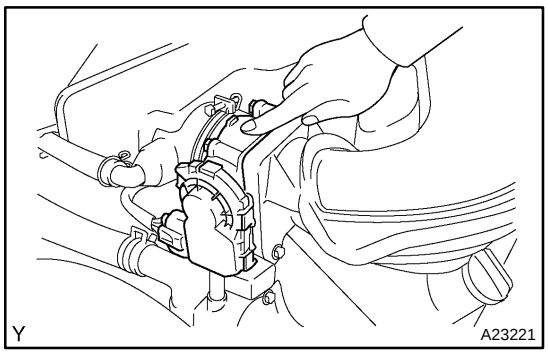

THROTTLE BODY

SF1YR−01

ON−VEHICLE INSPECTION

1. CHECK FOR OPERATING SOUND

(a) Turn the ignition switch to the ON position.

(b) When turning the accelerator pedal position sensor lever, listen to the running sound of the motor. Also, check that there is no friction sound.

If operation is not as specified, check the throttle control motor (see page DI−283), wiring and ECM.

2. INSPECT THROTTLE POSITION SENSOR

(a) Connect the hand−held tester to the DLC3.

(b) Turn the ignition switch to the ON position.

(c) When turning the accelerator pedal position sensor lever to the full−open position, check the percentage of the throttle valve opening angle (THROTTLE POS) of the CURRENT DATA.

Standard percentage of the valve opening angle: 60 % or more

If operation is not as specified, check the accelerator pedal position sensor (see page DI−299), the wiring and the ECM.

If not using a hand−held tester, measure the voltage between the terminals (VTA1 − E2, VTA2 − E2) of the ECM connector (see page DI−34).

3. INSPECT AIR ASSIST SYSTEM

(a) Start the engine and check that the MIL does not illuminate.

(b) Let the engine warm up to the normal operating temperature.

(c) Switch the A/C compressor from ON to OFF, and check the idle speed.

Idle speed (Transmission in neutral): 650 to 750 rpm

NOTICE:

Perform inspection without an electrical load.

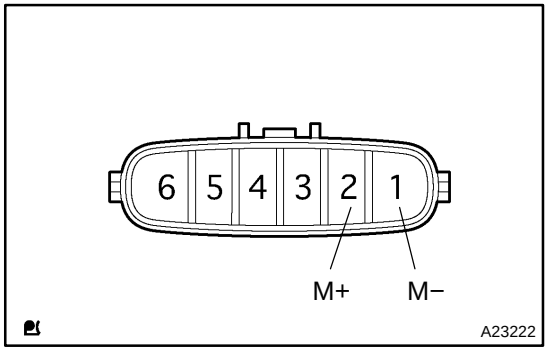

4. INSPECT THROTTLE BODY RESISTANCE

Using an ohmmeter, measure the resistance between the terminals.

Terminal No.	Resistance
2 (M+) ⇔ 1 (M−)	0.3 to 100 Ω at 20 °C (68 °F)

SF1YT−01

REMOVAL

1. DRAIN ENGINE COOLANT
2. REMOVE V−BANK COVER
3. REMOVE AIR CLEANER (See page EM−62)

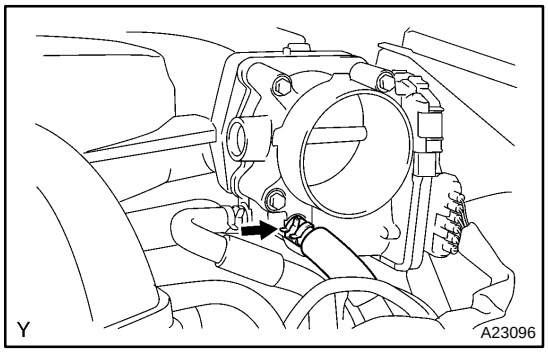

4. DISCONNECT WATER BY−PASS HOSE NO.5

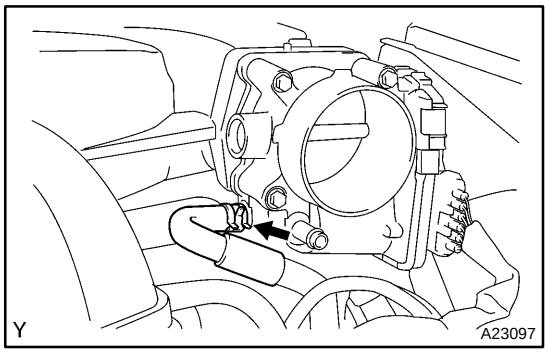

5. DISCONNECT WATER BY−PASS HOSE NO.4

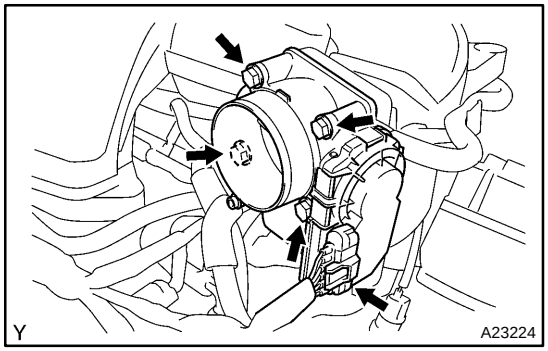

6. REMOVE THROTTLE BODY

(a) Disconnect the throttle motor connector.

(b) Remove the 4 bolts, throttle body and gasket.

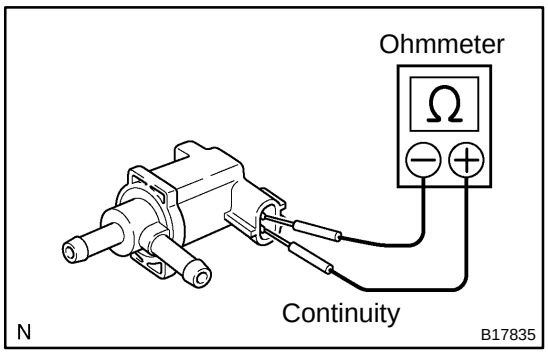

VSV FOR EVAPORATIVE EMISSION (EVAP)

SF1Z7−01

INSPECTION

1. REMOVE VSV

2. INSPECT VSV

(a) Inspect the VSV for an open circuit.

Using an ohmmeter, measure the resistance between the terminals.

Resistance: 26 to 30 Ω at 20 °C (68 °F)

If the resistance is not as specified, replace the VSV.

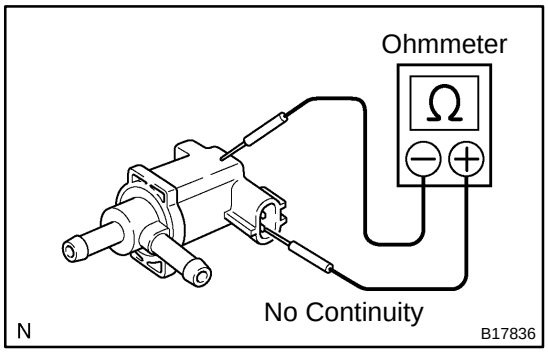

(b) Inspect the VSV for ground.

Using an ohmmeter, check that there is no continuity between each terminal and the body.

If there is continuity, replace the VSV.

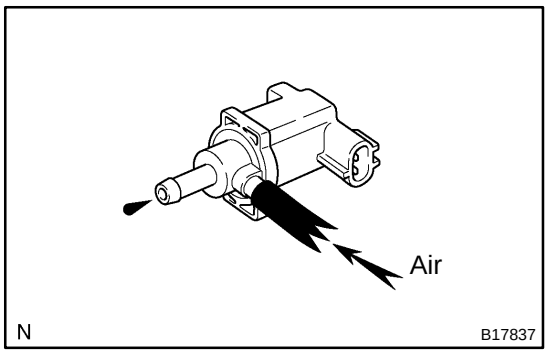

(c) Inspect VSV operation.

(1) Check that air does not flow from the ports.

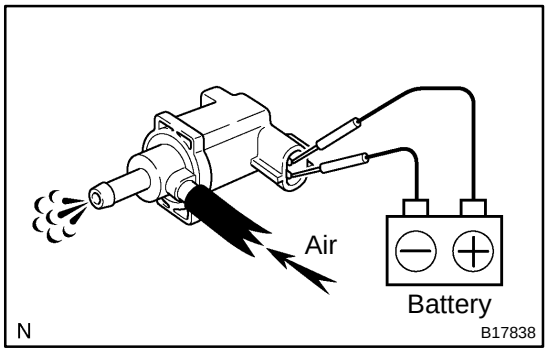

(2) Apply battery voltage across the terminals.

(3) Check that air flows from the ports.

If operation is not as specified, replace the VSV.

3. REINSTALL VSV

SF1XM−01

COMPONENTS

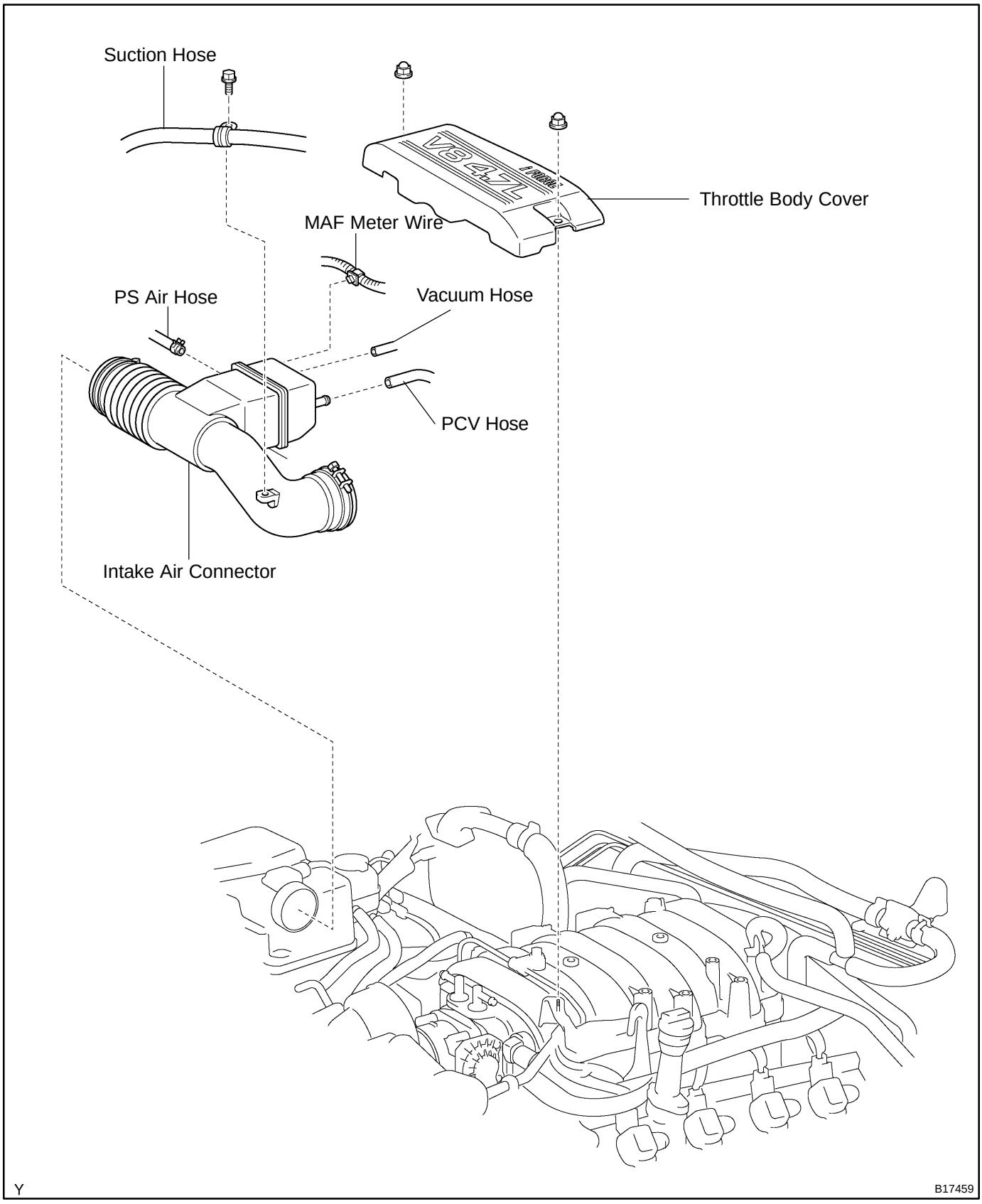

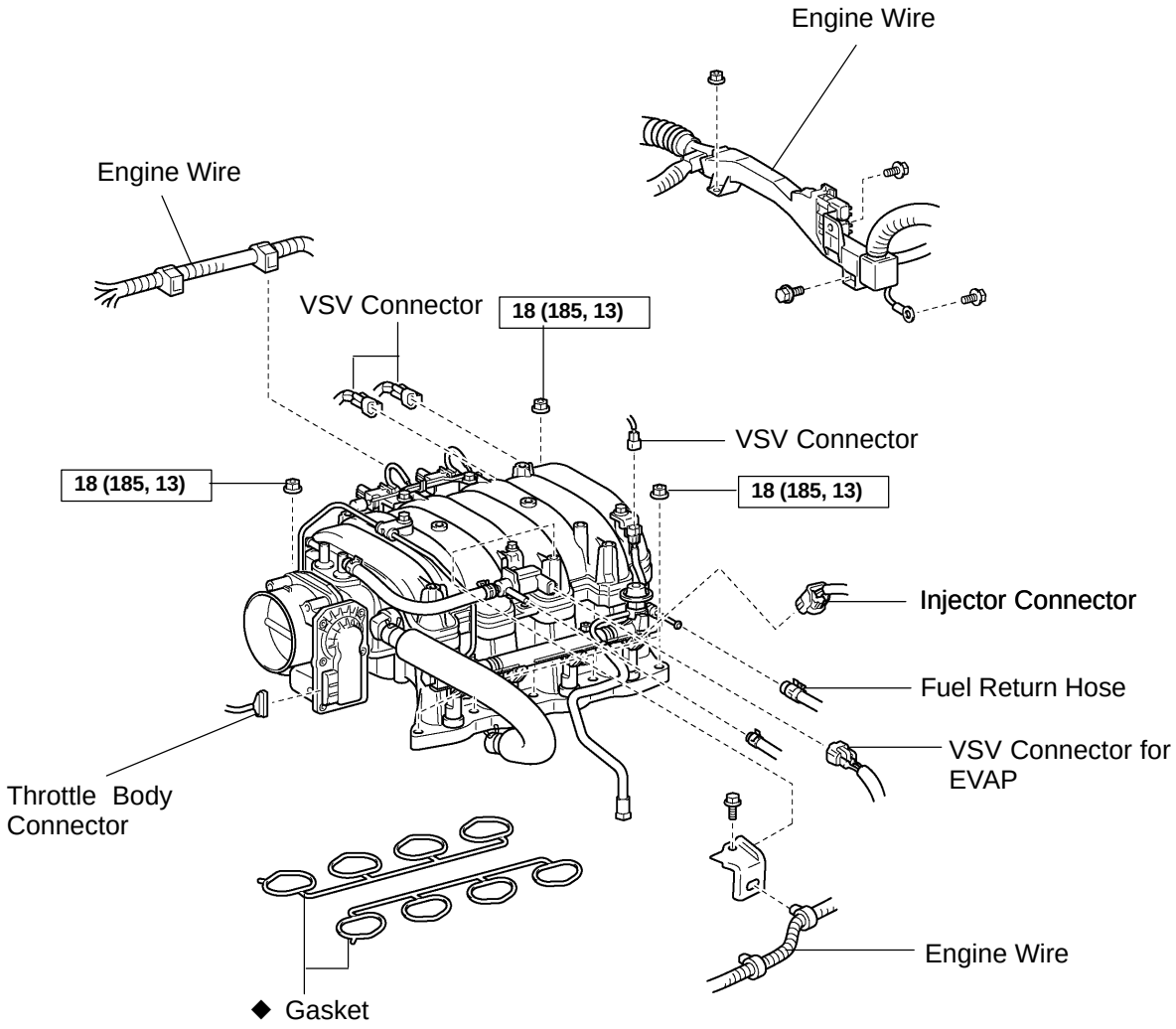

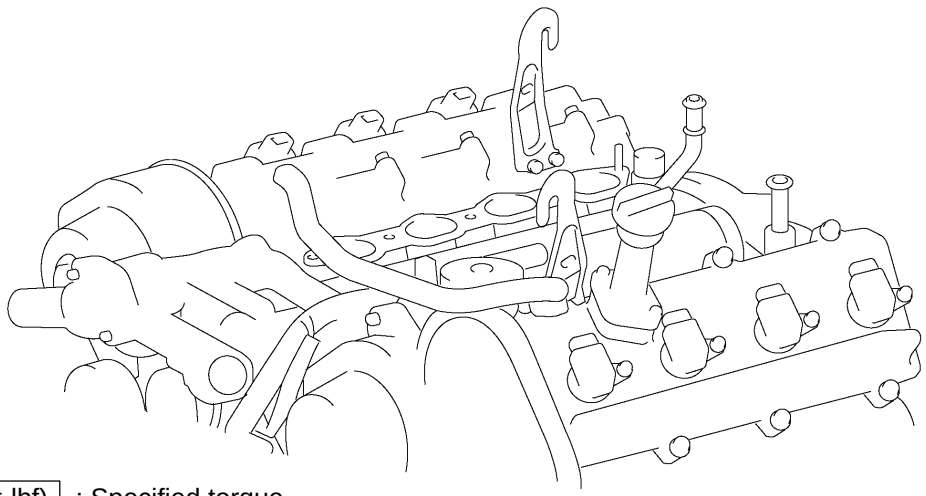

N·m (kgf·cm, ft·lbf) : Specified torque

◆ Non−reusable part

Y

B17490

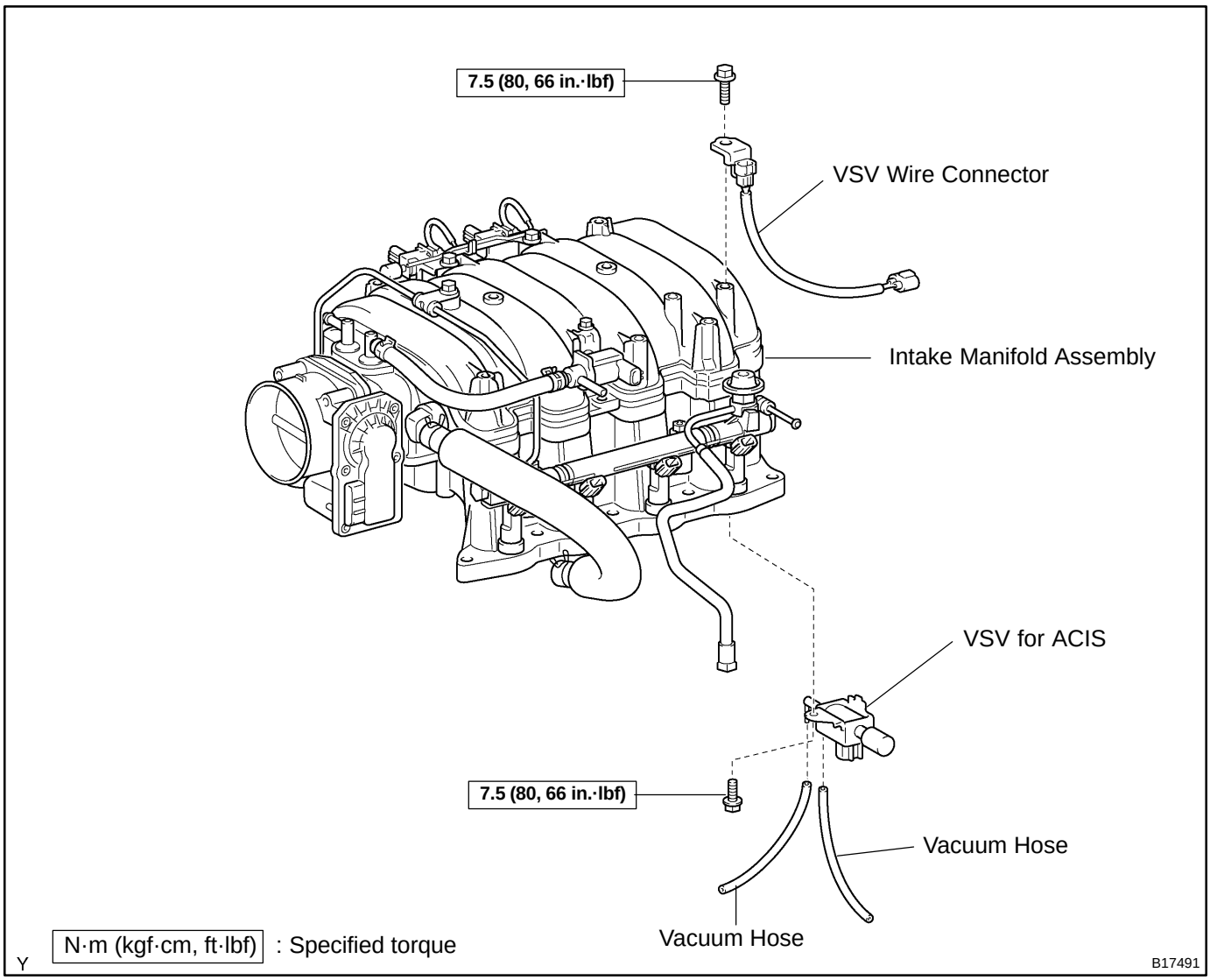
7.5 (80, 66 in.·lbf)
VSV Wire Connector
Intake Manifold Assembly
VSV for ACIS
7.5 (80, 66 in.·lbf)
Vacuum Hose
Vacuum Hose
N·m (kgf·cm, ft·lbf) : Specified torque
Y
B17491

SF1XO−01

INSPECTION

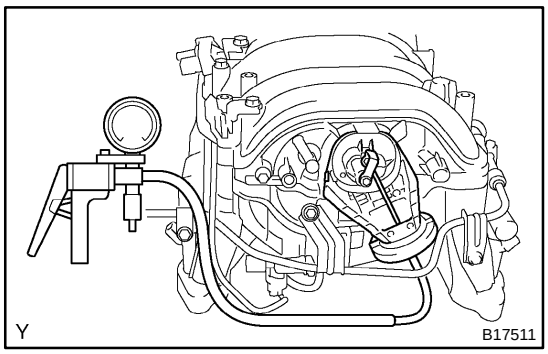

1. INSPECT INTAKE AIR CONTROL VALVE

(a) With 39.9 kPa (300 mmHg, 11.8 in.Hg) of vacuum applied to the actuator, check that the actuator rod moves.

(b) One minute after applying the vacuum in step (a), check that the actuator rod does not return.

If the operation is not as specified, replace the intake manifold.

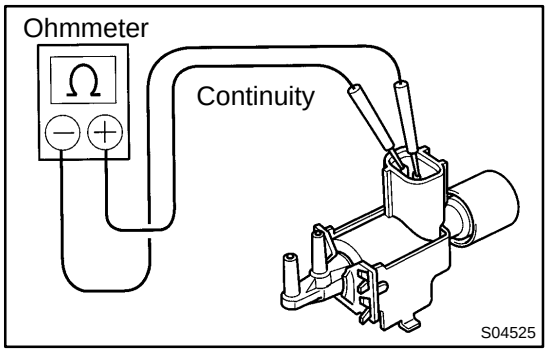

2. INSPECT VSV

(a) Using an ohmmeter, check that there is continuity between each terminal.

Resistance: 33 to 39 Ω at 20˚C (68˚F)

If there is no continuity, replace the VSV.

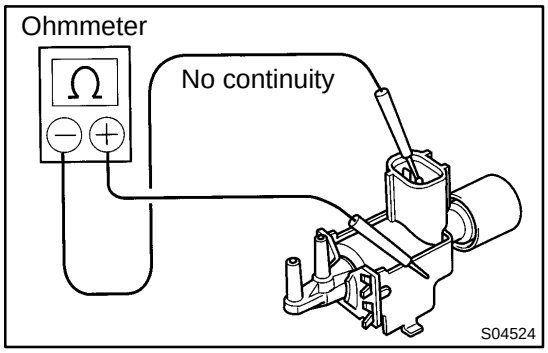

(b) Using an ohmmeter, check that there is no continuity between each terminal and the body.

If there is continuity, replace the VSV.

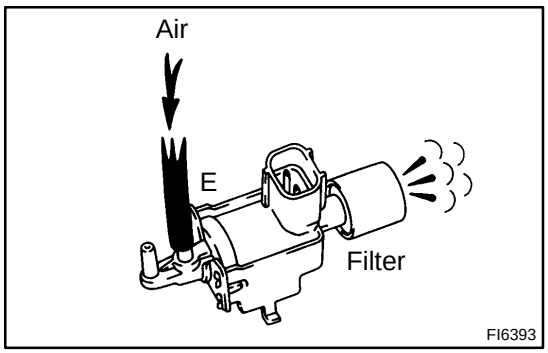

(c) Check that air flows from port E to the filter.

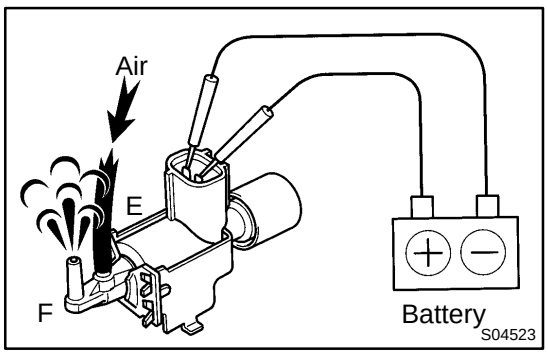

(d) Apply battery voltage across the terminals.

(e) Check that air flows from port E to port F.

If operation is not as specified, replace the VSV.

SF1XP−02

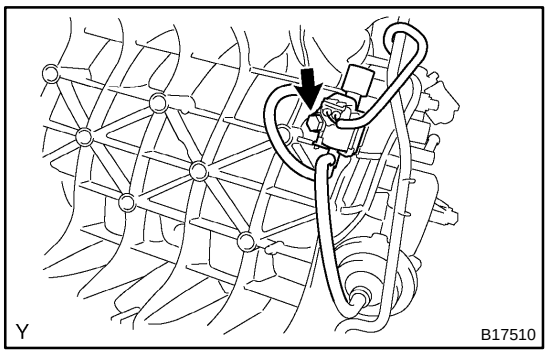

INSTALLATION

1. INSTALL VSV FOR ACIS

(a) Install the VSV to the intake manifold with the bolt.
Torque: 7.5 N·m (76 kgf·cm, 66 in.·lbf)

(b) Connect the 2 vacuum hoses to the VSV.

2. INSTALL INTAKE MANIFOLD ASSEMBLY
(See page EM−60)

3. INSTALL THROTTLE BODY COVER

ACOUSTIC CONTROL INDUCTION SYSTEM (ACIS)

SF0PD−04

ON−VEHICLE INSPECTION

INSPECT INTAKE AIR CONTROL VALVE OPERATION

(a) Start the engine.

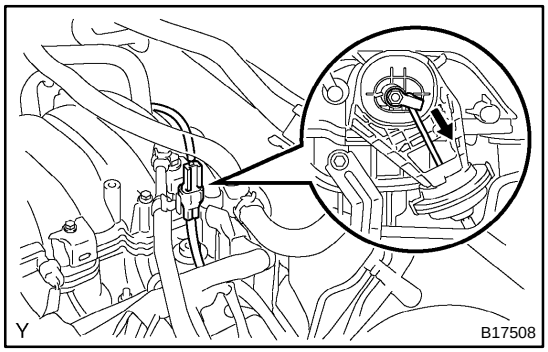

(b) While the engine idling, check that the actuator rod moves.

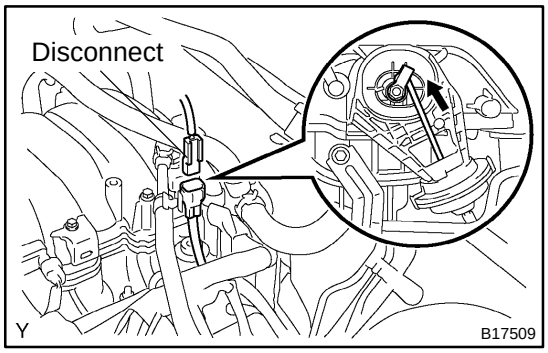

(c) Disconnect the VSV connector, and check that the actuator rod is returned.

If the operation is not as specified, inspect the intake air control valve, VSV and ECM.

SF1XN−02

REMOVAL

1. REMOVE THROTTLE BODY COVER

2. REMOVE INTAKE MANIFOLD ASSEMBLY
(See page EM−36)

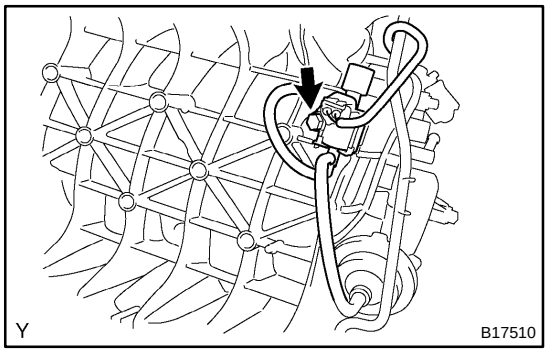

3. REMOVE VSV FOR ACIS

(a) Remove the 2 vacuum hoses from the VSV.

(b) Remove the bolt and VSV from the intake manifold.

AIR−FUEL RATIO (A/F) SENSOR

COMPONENTS

SF1XV−02

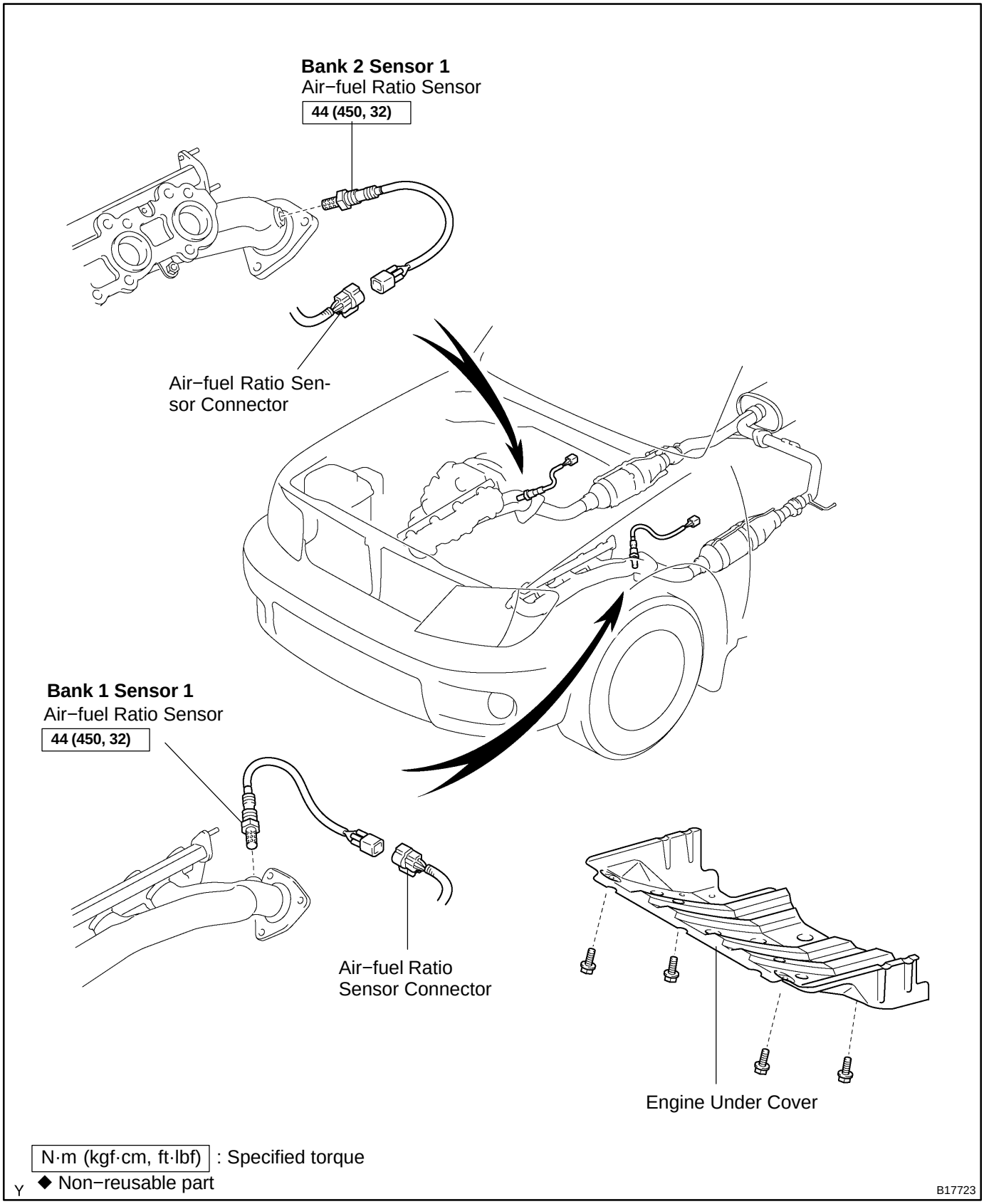

N·m (kgf·cm, ft·lbf) : Specified torque

◆ Non−reusable part

Y

B17723

SF1XW−02

INSPECTION

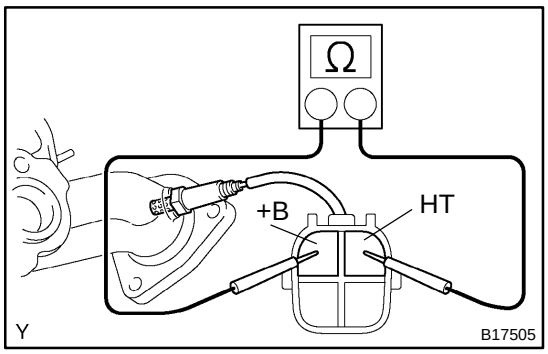

1. INSPECT HEATER RESISTANCE OF AIR FUEL RATIO SENSOR

(a) Disconnect the air fuel ratio sensor connector.

(b) Using an ohmmeter, measure the resistance between terminals +B and HT.

Resistance 11 to 16 kΩ at 20˚C (68˚F)

If the resistance is not as specified, replace the sensor.

Torque: 44 N·m (450 kgf·cm, 32 ft·lbf)

(c) Reconnect the air fuel ratio sensor connector.

2. INSPECT OPERATION OF AIR FUEL RATIO SENSOR (See page DI−507)

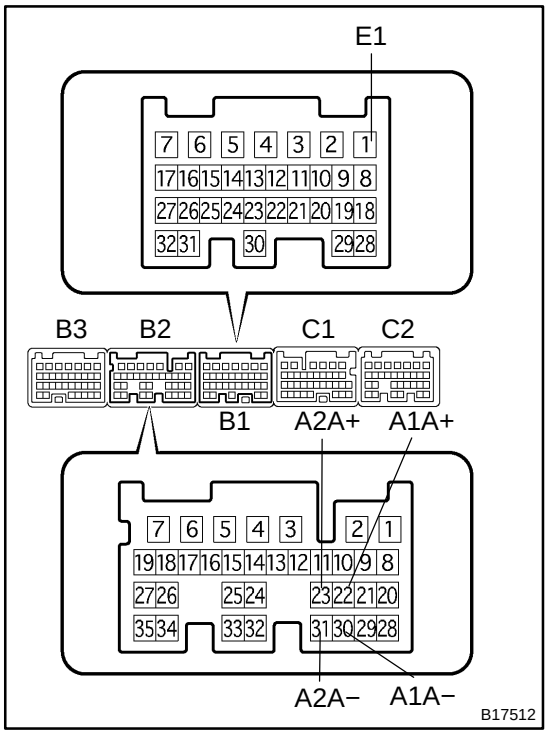

3. INSPECT AIR−FUEL RATIO COMPENSATION SYSTEM

(a) Measure the voltage between the terminals of the ECM connectors.

Standard:

Tester Connection	Condition	Specified Condition
B2−22 (A1A+) − B1−1 (E1)	Ignition switch ON	3.3 V
B2−30 (A1A−) − B1−1 (E1)	Ignition switch ON	2.9 V
B2−23 (A2A+) − B1−1 (E1)	Ignition switch ON	3.3 V
B2−31 (A2A−) − B1−1 (E1)	Ignition switch ON	2.9 V

NOTICE:

Connect test leads from the back side of the connector. The connectors should not be disconnected from the ECM.

HINT:

The voltage between the terminals of the ECM is kept constant regardless of the voltage of the A/F sensor.

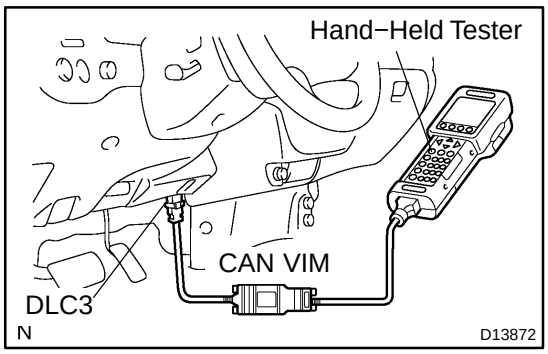

(b) Connect a hand−held tester to the Controller Area Network Vehicle Interface Module (CAN VIM). Then connect the CAN VIM to the Date Link Connector 3 (DLC3).

(c) Turn the ignition switch ON.

(d) Select the following menu items : Data List / A/FS B1 S1 and O2S B1 S2.

(e) Warm up the A/F sensor by running the engine at 2,500 rpm for approximately 2 minutes.

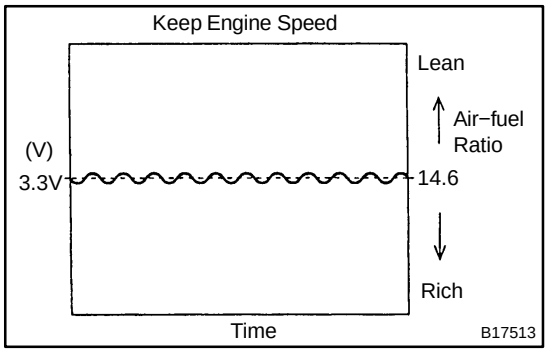

(f) Keep the engine speed at 2,500 rpm and confirm that the display of the ”A/FS B1 S1” is as shown in the illustration.

HINT:

- The illustration may slightly differ from the display on the hand−held tester.
- The waveform of the A/F sensor is displayed only on the hannd−heldtester.

(g) Confirm that the display of the ”O2S B1 S2” changes between 0 and 1 V with the engine speed at 2,500 rpm.

OK:

The voltage output oscillates more than 8 times in 10 seconds.

CAUTION:

- **Perform the check immediately after warming up the engine.**
- **If the voltage variation could not be verified, warm up the heated oxygen sensor again. If it could not be verified even after warming up the sensor again, check the DTC No. (See page DI−507)**

ACCELERATOR PEDAL POSITION SENSOR

COMPONENTS

SF1UM−05

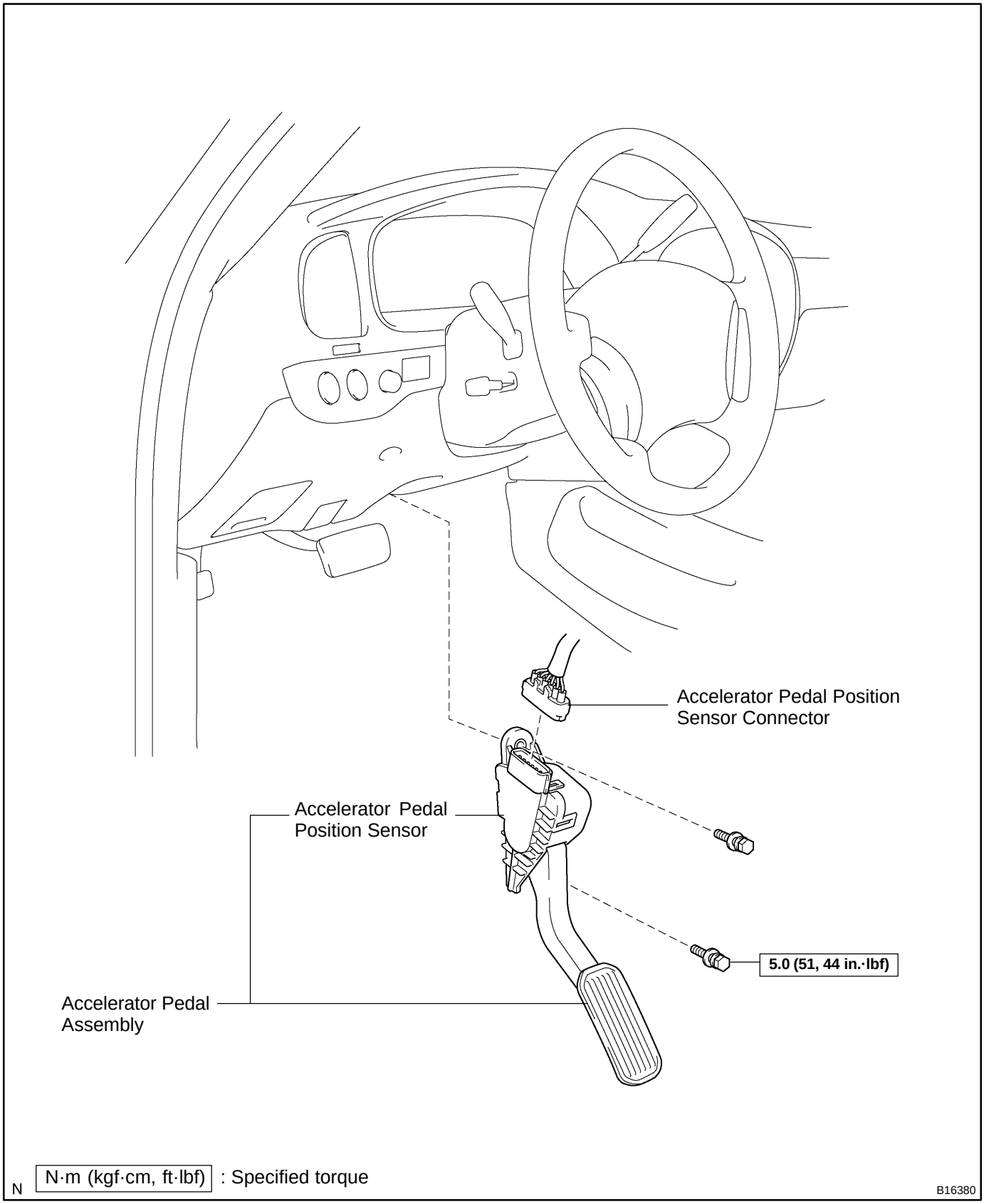

SF1UN−05

INSPECTION

INSPECT ACCELERATOR PEDAL POSITION SENSOR (See page DI−794)

If necessary, replace the accelerator pedal assembly.

NOTICE:

- **Be care not to give a shock to the accelerator pedal assembly.**
- **Be care not to disassemble the accelerator pedal assembly.**

A/F SENSOR HEATER RELAY

SF1XR−01

INSPECTION

1. **REMOVE RELAY BOX COVER**
2. **REMOVE A/F SENSOR HEATER RELAY (Marking: A/F HTR)**

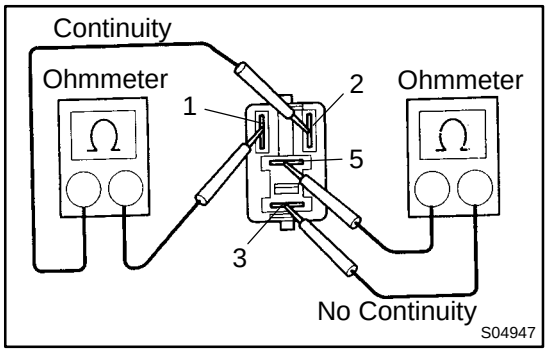

3. **INSPECT A/F SENSOR HEATER RELAY CONTINUITY**

(a) Using an ohmmeter, check that there is continuity between terminals 1 and 2.

If there is no continuity, replace the relay.

(b) Check that there is no continuity between terminals 3 and 5.

If there is continuity, replace the relay.

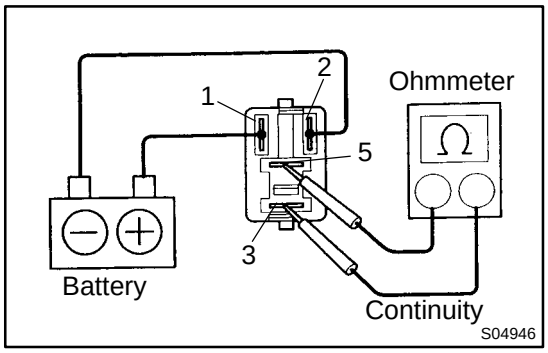

4. **INSPECT A/F SENSOR HEATER RELAY OPERATION**

(a) Apply battery voltage across terminals 1 and 2.

(b) Using an ohmmeter, check that there is continuity between terminals 3 and 5.

If there is no continuity, replace the relay.

5. **REINSTALL A/F SENSOR HEATER RELAY**
6. **REINSTALL RELAY BOX COVER**

CIRCUIT OPENING RELAY

SF1XS−01

INSPECTION

1. REMOVE RELAY BOX COVER

2. REMOVE CIRCUIT OPENING RELAY (Marking: C/O)

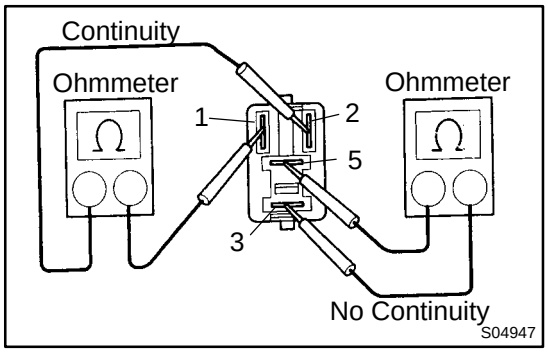

3. INSPECT CIRCUIT OPENING RELAY CONTINUITY

(a) Using an ohmmeter, check that there is continuity between terminals 1 and 2.

If there is no continuity, replace the relay.

(b) Check that there is no continuity between terminals 3 and 5.

If there is continuity, replace the relay.

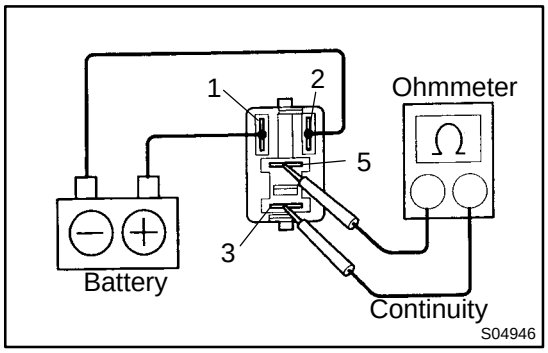

4. INSPECT CIRCUIT OPENING RELAY OPERATION

(a) Apply battery positive voltage across terminals 1 and 2.

(b) Using an ohmmeter, check that there is continuity between terminals 3 and 5.

If there is no continuity, replace the relay.

5. REINSTALL CIRCUIT OPENING RELAY

6. REINSTALL RELAY BOX COVER

SF0P9−03

COMPONENTS

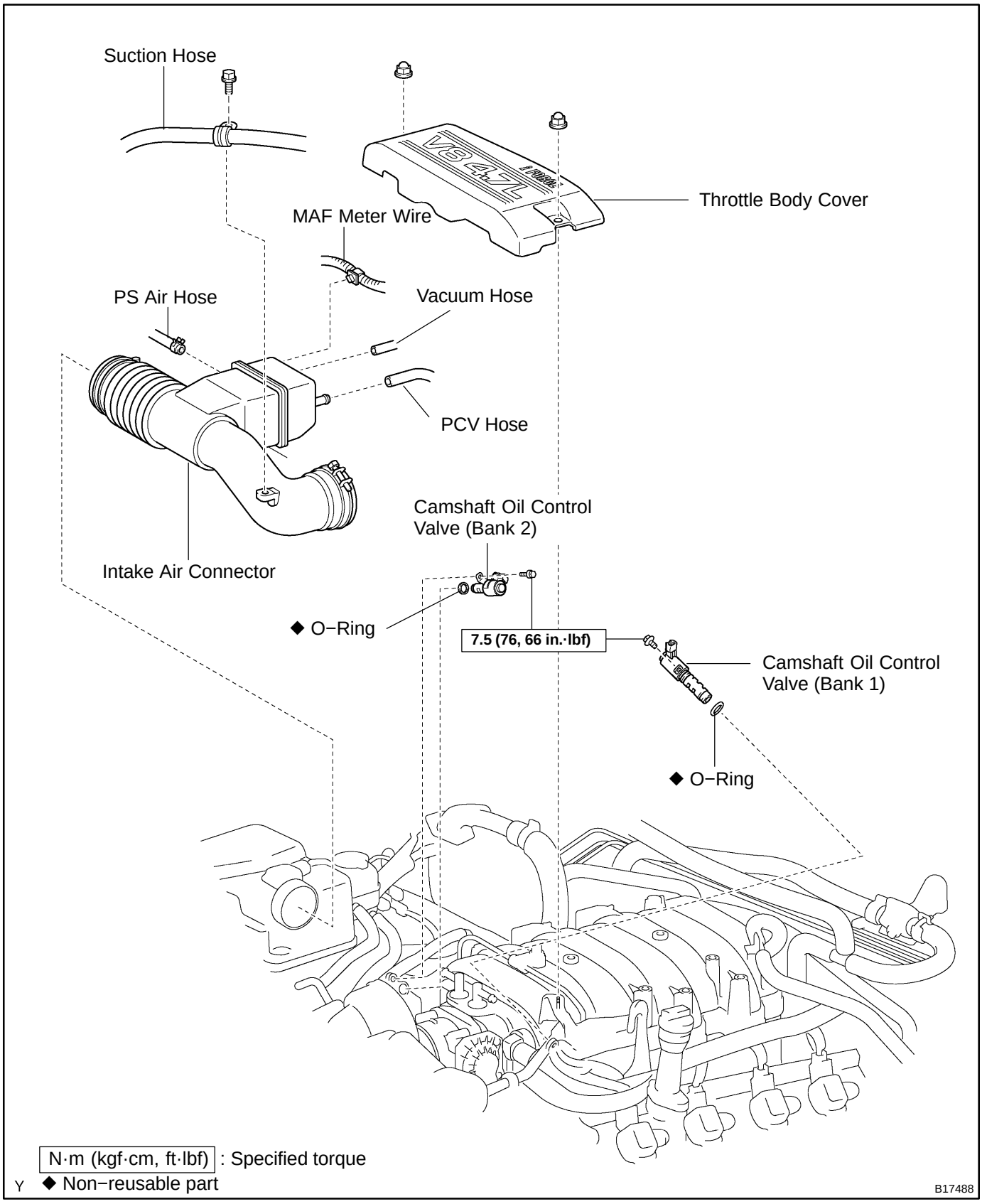

SF0PB−02

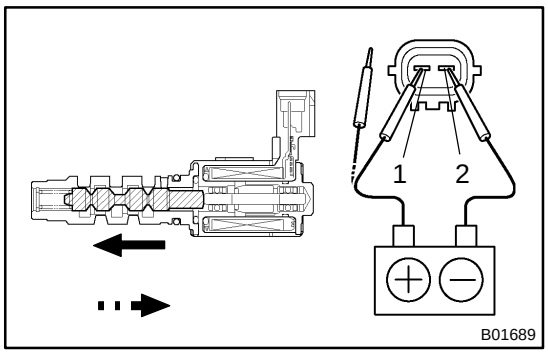

INSPECTION

INSPECT OIL CONTROL VALVE OPERATION

Connect the positive ⊕ lead to terminal 1 of the connector and the negative ⊖ lead to terminal 2, then check the movement of the valve.

When battery positive voltage is applied.	Valve moves in ← direction.
When battery positive voltage is cut off.	Valve moves in ⇢ direction.

If operation is not as specified, replace the oil control valve.

SF1XL−02

INSTALLATION

Installation is in the reverse order of removal. (See page SF−48)

CAMSHAFT TIMING OIL CONTROL VALVE

SF0P8−03

ON−VEHICLE INSPECTION

(a) Remove the throttle body cover.
(b) Remove the intake air connector.
(c) Disconnect the oil control valve connector.

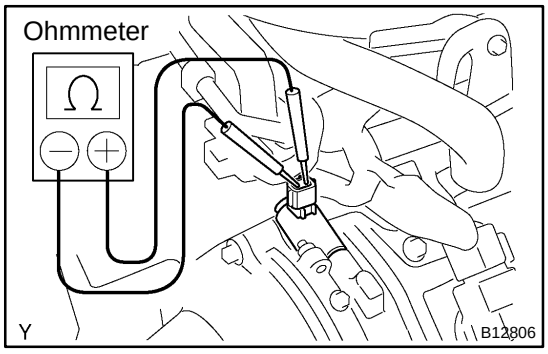

(d) Using an ohmmeter, measure the resistance between the terminals.

Resistance: 6.9 to 7.9 Ω at 20°C (68°F)

If the resistance is not as specified, replace the valve.
(e) Reconnect the oil control valve connector.
(f) Reinstall the intake air connector.
(g) Reinstall the throttle body cover.

SF1XK−01

REMOVAL

1. REMOVE THROTTLE BODY COVER

2. REMOVE INTAKE AIR CONNECTOR

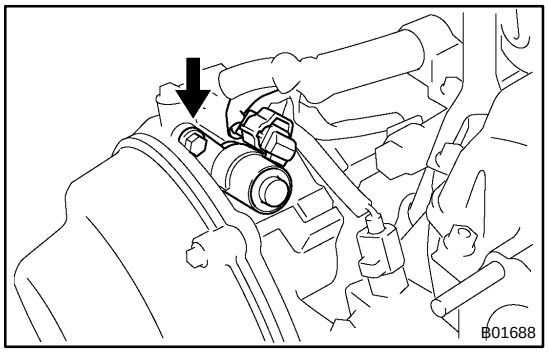

3. REMOVE CAMSHAFT TIMING OIL CONTROL VALVE

(a) Disconnect the 2 camshaft oil control valve connectors.

(b) Remove the bolt, camshaft oil control valve and O−ring.
Torque: 7.5 N·m (76 kgf·cm, 66 in.·lbf)

(c) Remove the O−ring from the each camshaft oil control valve.

HINT:

At the time of installation, please refer to the following items.

Use a new O−rings.

ENGINE CONTROL MODULE (ECM)

SF0Q0−14

COMPONENTS

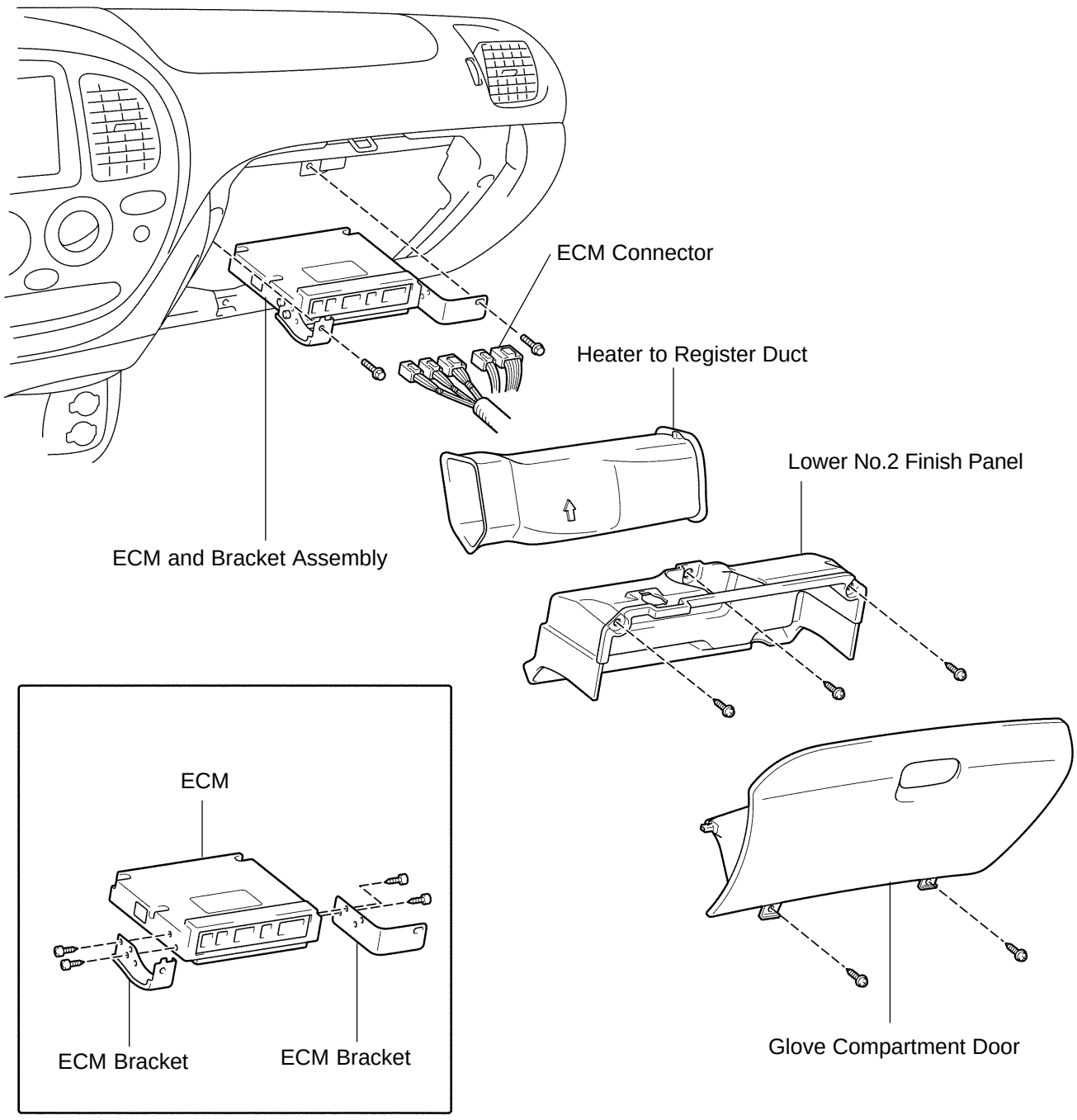

P

B07642

SF0Q1−13

INSPECTION

1. DISCONNECT CABLE FROM NEGATIVE (−) BATTERY TERMINAL

2. REMOVE REMOVE GLOVE COMPARTMENT

(a) Remove the 2 screws and glove compartment door.

(b) Remove the 3 screws and lower No.2 finish panel.

3. REMOVE HEATER TO REGISTER DUCT

4. REMOVE ECM

(a) Disconnect the 5 connectors.

(b) Remove the 2 bolts and ECM.

5. INSPECT ECM (See page DI−453)

6. REINSTALL ECM

(a) Install the ECM with the 2 bolts.

(b) Connect the 5 connectors.

7. INSTALL HEATER TO REGISTER DUCT

8. INSTALL GLOVE COMPARTMENT

(a) Install the lower No.2 finish panel with 3 screws.

(b) Install the glove compartment door with the 2 screws.

9. CONNECT CABLE TO NEGATIVE (−) BATTERY TERMINAL

ENGINE COOLANT TEMPERATURE (ECT) SENSOR

SF0PN−13

COMPONENTS

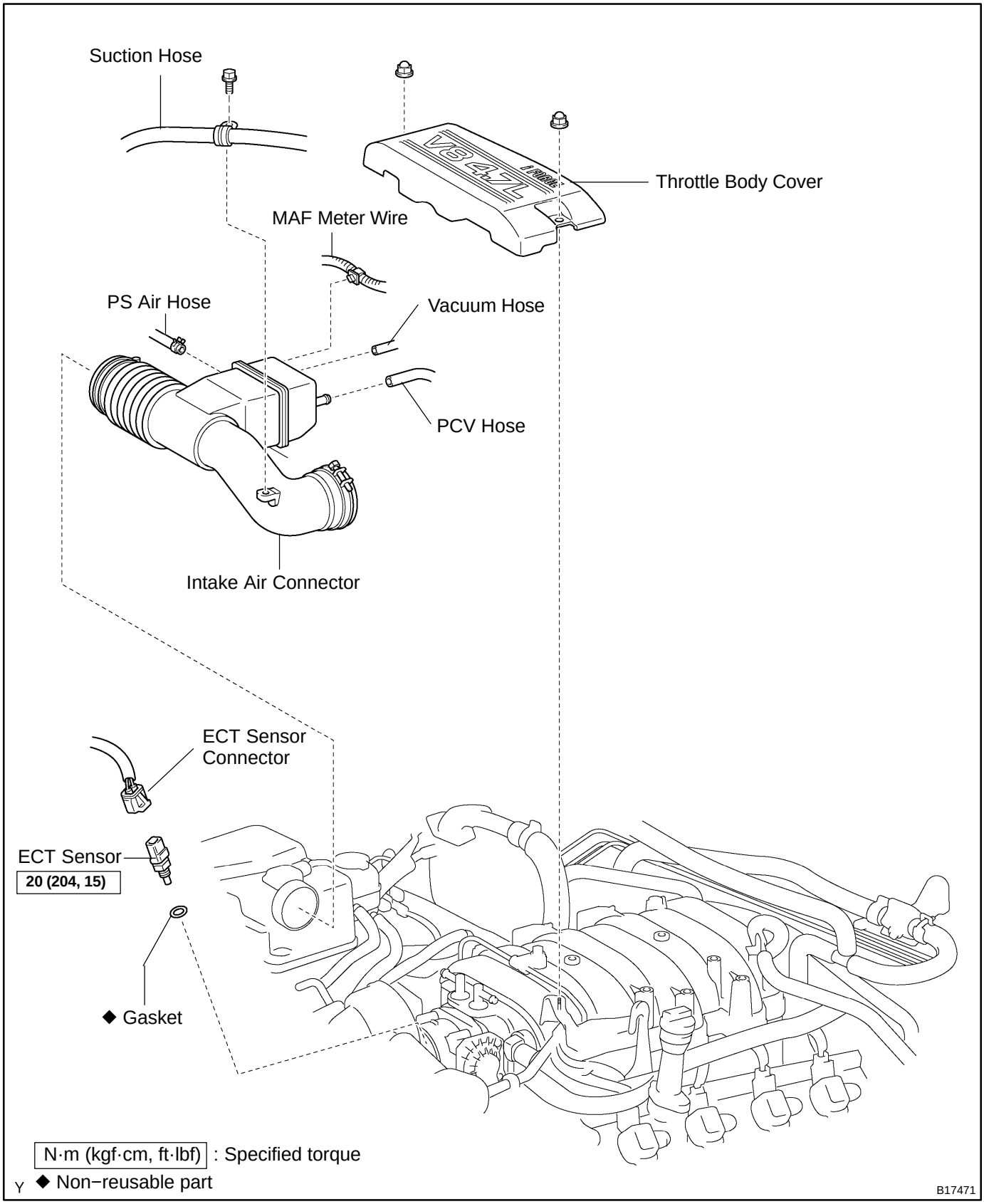

SF0PO−20

INSPECTION

1. DRAIN ENGINE COOLANT

2. REMOVE THROTTLE BODY COVER

3. REMOVE INTAKE AIR CONNECTOR

4. DISCONNECT THROTTLE BODY FROM INTAKE MANIFOLDS

Remove the nut and 3 bolts, and disconnect the throttle body from the intake manifold.

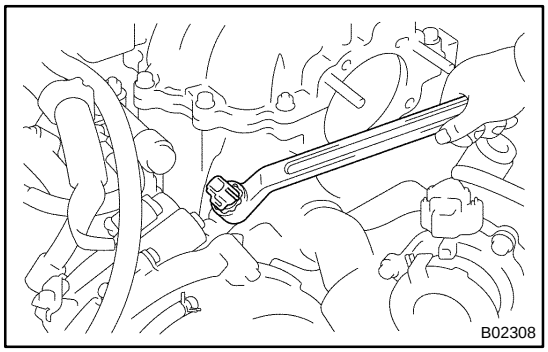

5. REMOVE ECT SENSOR

(a) Disconnect the ECT sensor connector.

(b) Remove the ECT sensor and gasket.

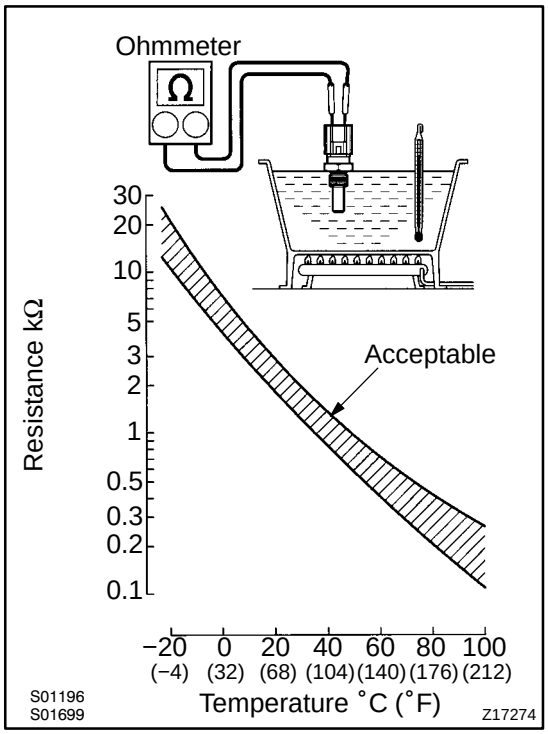

6. INSPECT ECT SENSOR

Using an ohmmeter, measure the resistance between the terminals.

Resistance: Refer to the graph

If the resistance is not as specified, replace the ECT sensor.

7. REINSTALL ECT SENSOR

(a) Install a new gasket and the ECT sensor.

Torque: 19.6 N·m (200 kgf·cm, 14 ft·lbf)

(b) Connect the ECT sensor connector.

8. REINSTALL THROTTLE BODY TO INTAKE MANIFOLDS

Install a new gasket and the throttle body with the 2 bolts and 2 nuts.

Torque: 20 N·m (204 kgf·cm, 15 ft·lbf)

9. REINSTALL INTAKE AIR CONNECTOR

10. REFILL WITH ENGINE COOLANT (See page CO−2)

11. REINSTALL THROTTLE BODY COVER

EFI MAIN RELAY

SF1XQ−01

INSPECTION

1. REMOVE RELAY BOX COVER

2. REMOVE EFI MAIN RELAY (Marking: EFI)

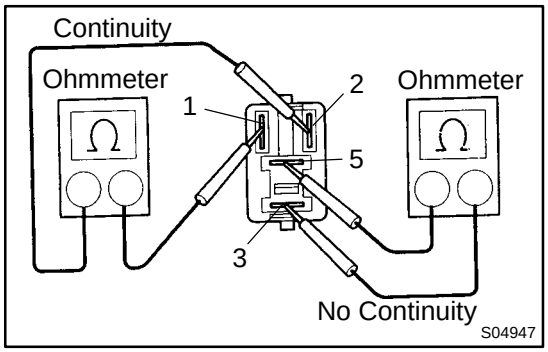

3. INSPECT EFI MAIN RELAY CONTINUITY

(a) Using an ohmmeter, check that there is continuity between terminals 1 and 2.

If there is no continuity, replace the relay.

(b) Check that there is no continuity between terminals 3 and 5.

If there is continuity, replace the relay.

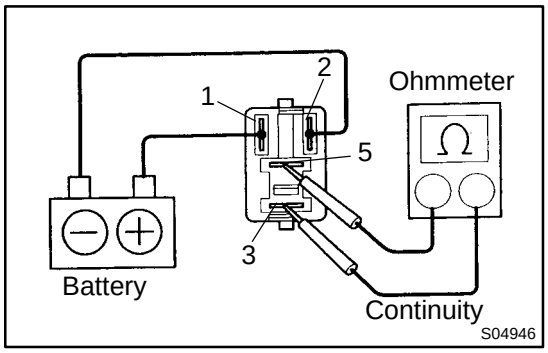

4. INSPECT EFI MAIN RELAY OPERATION

(a) Apply battery voltage across terminals 1 and 2.

(b) Using an ohmmeter, check that there is continuity between terminals 3 and 5.

If there is no continuity, replace the relay.

5. REINSTALL EFI MAIN RELAY

6. REINSTALL RELAY BOX COVER

FUEL CUT RPM

SF0Q2−16

INSPECTION

1. WARM UP ENGINE

Allow the engine to warm up to normal operating temperature.

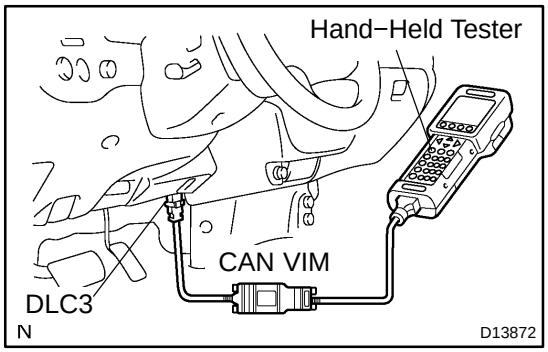

2. CONNECT HAND−HELD TESTER

(a) Connect a hand−held tester to the Controller Area Network Vehicle Interface Module (CAN VIM). Then connect the CAN VIM to the Date Link Connector 3 (DLC3).

(b) Please refer to the hand−held tester operator's manual for further details.

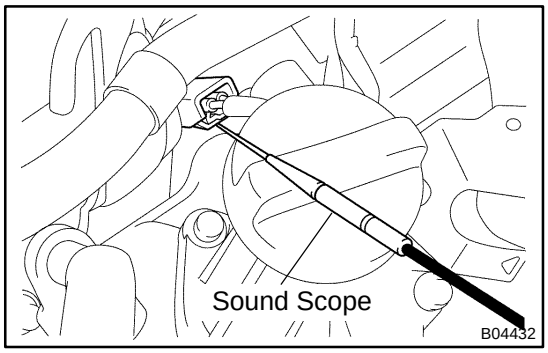

3. INSPECT FUEL CUTOFF RPM OPERATION

(a) Increase the engine speed to at least 2,500 rpm.

(b) Check for injector operating noise.

(c) Check that when the throttle lever is released, injector operation noise stops momentarily and then resumes.

HINT:

- The vehicle should be stopped.
- Measure with the A/C OFF.

  Fuel return speed: 1,400 rpm

(d) Disconnect the hand−held tester and CAN VIM from the DLC3.

FUEL PRESSURE REGULATOR

COMPONENTS

SF0XZ−13

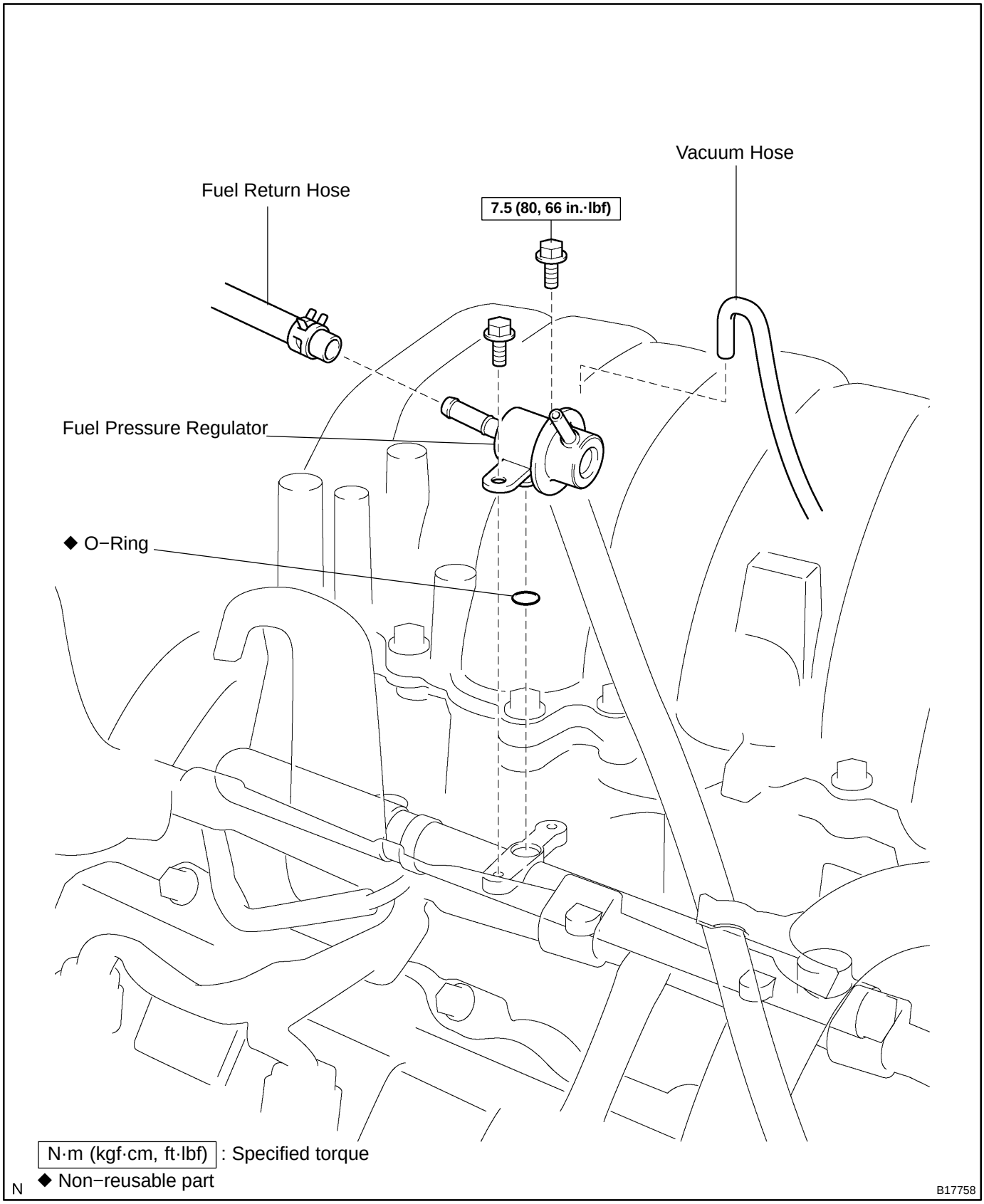

SF0Y1−14

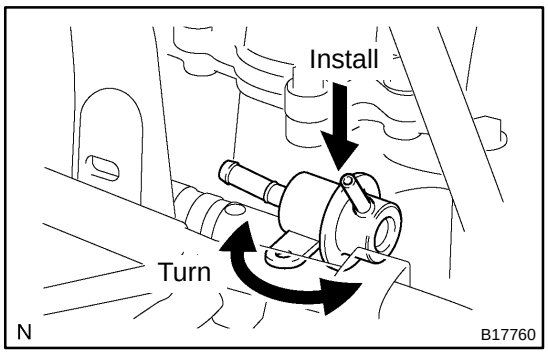

INSTALLATION

1. INSTALL FUEL PRESSURE REGULATOR

(a) Apply a light coat of gasoline to a new O−ring, and install it to the pressure regulator.

(b) While turning the pressure regulator left and right, install it to the delivery pipe.

(c) Install the pressure regulator with the 2 bolts.
Torque: 7.5 N·m (76 kgf·cm, 66 in.·lbf)

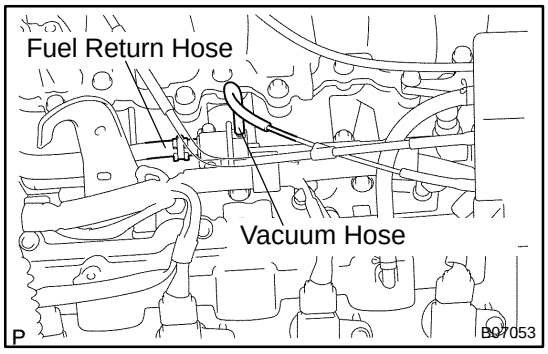

(d) Connect the vacuum hose to intake air resonator.

(e) Connect the fuel return hose to the pressure regulator.

2. CHECK FOR FUEL LEAKS (See page SF−1)

SF0Y0−10

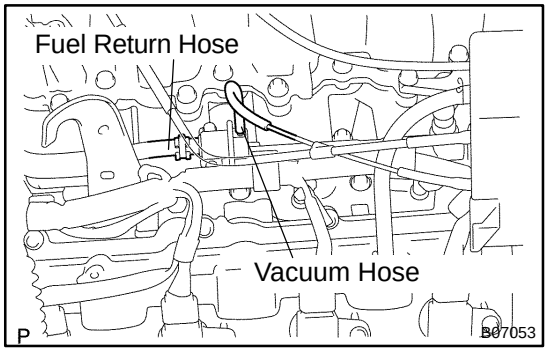

REMOVAL

REMOVE FUEL PRESSURE REGULATOR

(a) Disconnect the vacuum hose from intake air resonator.
(b) Disconnect the fuel return hose from the pressure regulator.

CAUTION:
Put a shop towel under the pressure regulator.

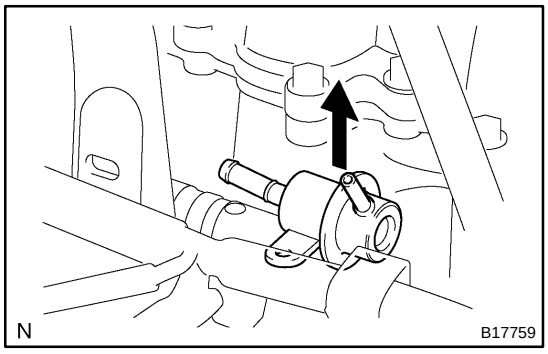

(c) Remove the 2 bolts, and pull out the pressure regulator.
(d) Remove the O−ring from the pressure regulator.

FUEL PUMP RELAY

SF1XT−01

INSPECTION

1. REMOVE RELAY BOX COVER

2. REMOVE FUEL PUMP RELAY (Marking: F/P)

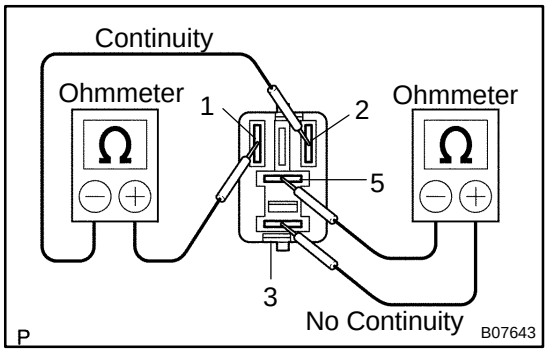

3. INSPECT FUEL PUMP RELAY CONTINUITY

(a) Using an ohmmeter, check that there is continuity between terminals 1 and 2.

If there is no continuity, replace the relay.

(b) Check that there is continuity between terminals 3 and 4.

If there is no continuity, replace the relay.

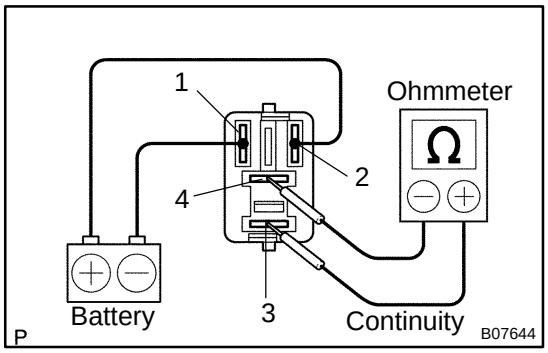

4. INSPECT FUEL PUMP RELAY OPERATION

(a) Apply battery positive voltage across terminals 1 and 2.

(b) Using an ohmmeter, check that there is no continuity between terminals 3 and 4.

If there is continuity, replace the relay.

5. REINSTALL FUEL PUMP RELAY

6. REINSTALL RELAY BOX COVER

FUEL PUMP RESISTOR

SF138−05

COMPONENTS

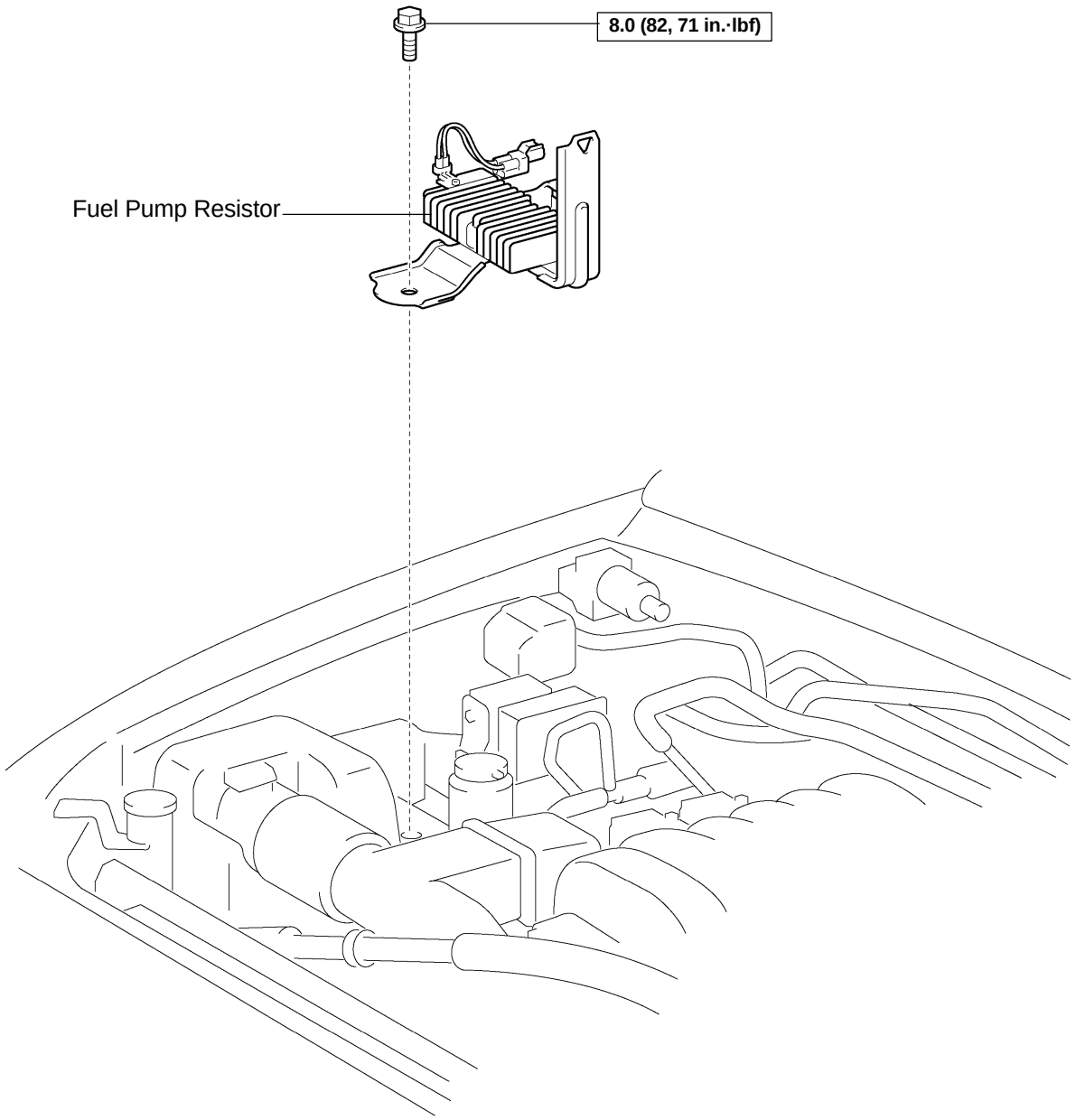

N·m (kgf·cm, ft·lbf) : Specified torque

Y

B17500

SF139−05

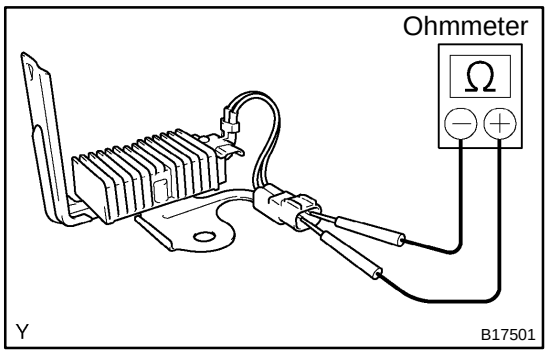

INSPECTION

1. REMOVE FUEL PUMP RESISTOR

2. INSPECT FUEL PUMP RESISTOR

Using an ohmmeter, measure the resistance between the terminals.

Resistance: 0.70 to 0.76 Ω at 20˚C (68˚F)

If the resistance is not as specified, replace the resistor.

3. REINSTALL FUEL PUMP RESISTOR

Torque: 8.0 N·m (82 kgf·cm,71 in.·lbf)

FUEL TANK AND LINE

SF0OZ−18

COMPONENTS

CAUTION:

- **Always use new gaskets when replacing the fuel tank or component parts.**
- **Apply the proper torque to all parts tightened**

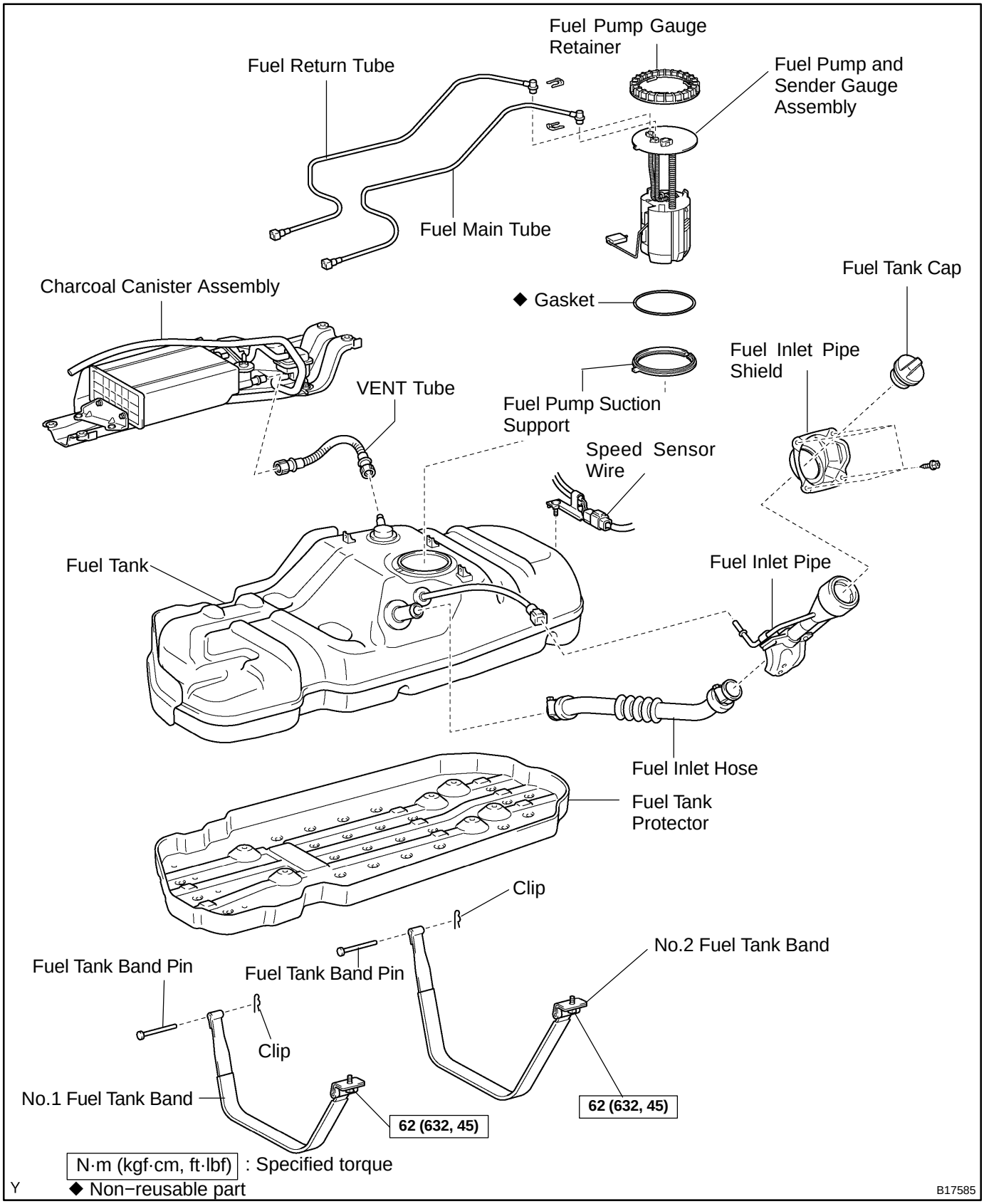

SF0P0−15

INSPECTION

INSPECT FUEL TANK AND LINE

(a) Check the fuel lines for cracks or leakage, and all connections for deformation.

(b) Check the fuel tank vapor vent system hoses and connections for looseness, sharp bends or damage.

(c) Check the fuel tank for deformation, cracks, fuel leakage or tank band looseness.

(d) Check the filler neck for damage or fuel leakage.

(e) Hose and pipe connections are as shown in the illustration.

If a problem is found, repair or replace the parts as necessary.

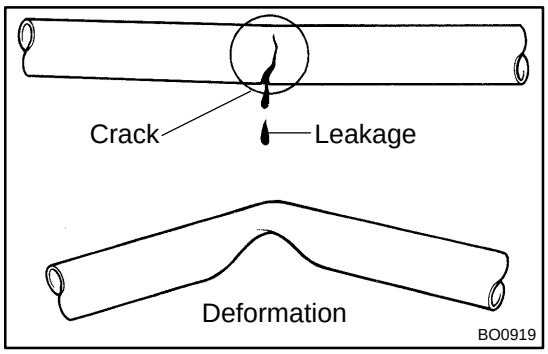

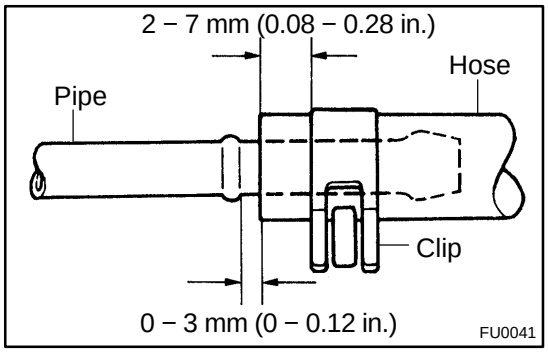

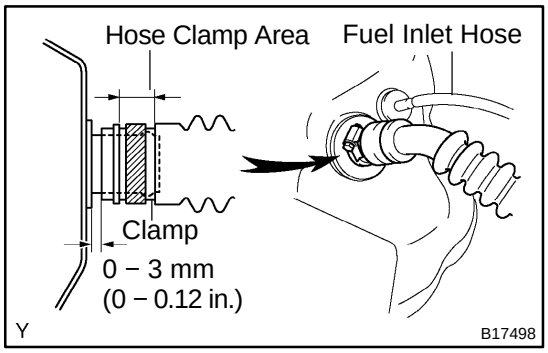

SF1Y3−01

INSTALLATION

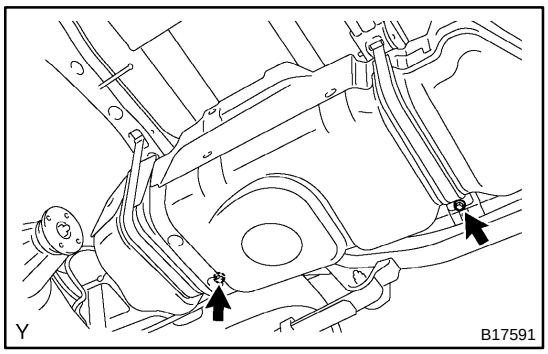

1. INSTALL FUEL PUMP ASSEMBLY (See page SF−19)

2. INSTALL FUEL TANK ASSEMBLY

(a) Set up the fuel tank on the transmission jack.

(b) Operate the transmission jack and install the fuel tank.

(c) Install the 2 fuel tank bands with the 2 bolts.
Torque: 62 N·m (632 kgf·cm, 45 ft·lbf)

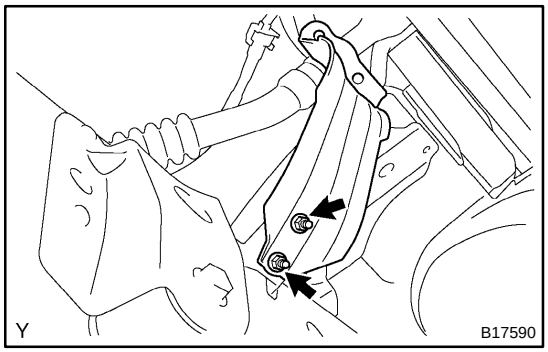

(d) Install the fuel pipe bracket to the body with the 2 nuts.
Torque: 20 N·m (204 kgf·cm, 15 ft·lbf)

3. CONNECT FUEL PUMP CONNECTOR

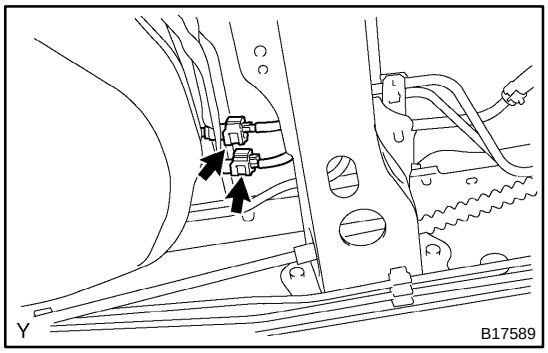

4. CONNECT FUEL MAIN TUBE AND RETURN TUBE (See page SF−1)

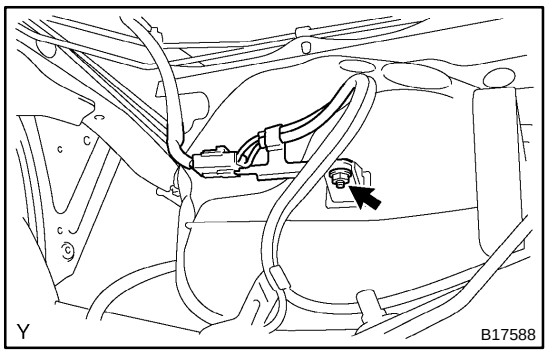

5. CONNECT SPEED SENSOR WIRE

Connect the speed sensor wire to the fuel tank with the nut.

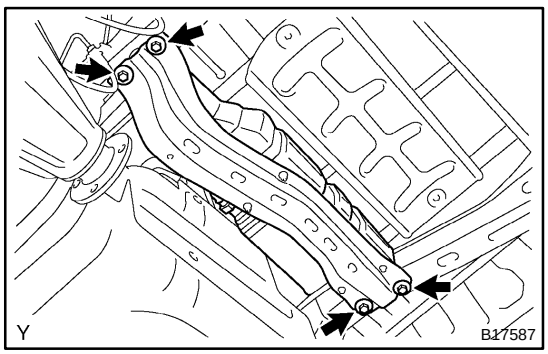

6. INSTALL CHARCOAL CANISTER ASSEMBLY

(a) Connect the pump module connector, vent hose and purge line hose to the charcoal canister.

(b) Install the charcoal canister assembly with the 4 bolts.
Torque:14.7 N·m (150 kgf·cm, 11 ft·lbf)

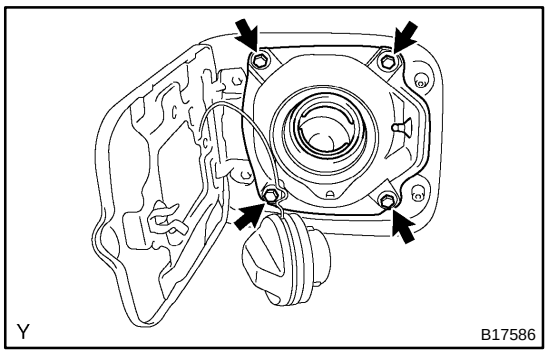

7. INSTALL FUEL INLET PIPE SHIELD

(a) Install the fuel inlet pipe shield with the 4 bolts.

(b) Install the fuel tank cap.

8. CHECK FOR FUEL LEAKS

9. INSTALL SPARE TIRE

SF1Y2−01

REMOVAL

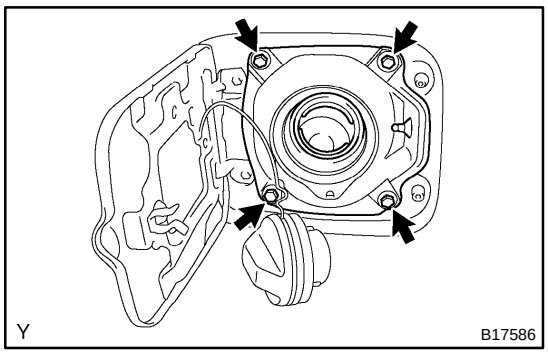

1. PREVENT GASOLINE FROM SPILLING OUT
(See page SF−1)

2. REMOVE FUEL TANK CAP

3. REMOVE FUEL INLET PIPE SHIELD

Remove the 4 bolts and fuel inlet pipe shield.

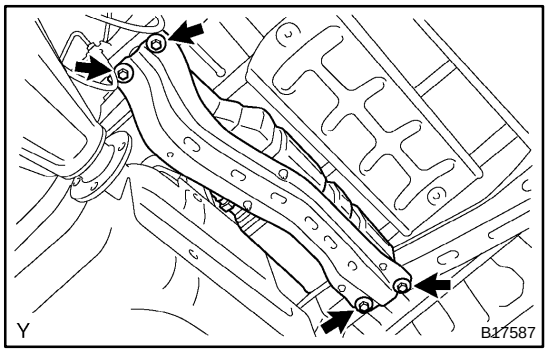

4. REMOVE CHARCOAL CANISTER ASSEMBLY

(a) Remove the 4 bolts and charcoal canister assembly.

(b) Disconnect the pump module connector, vent hose and purge line hose from the charcoal canister.

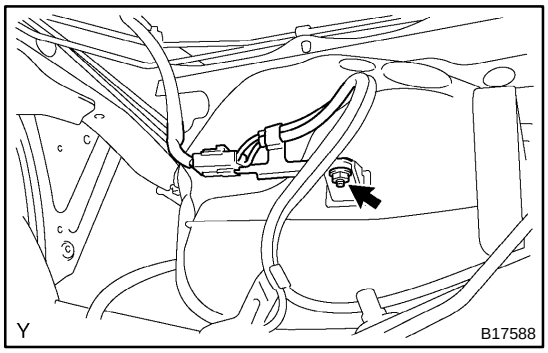

5. DISCONNECT SPEED SENSOR WIRE

Remove the nut and disconnect the speed sensor wire from the fuel tank.

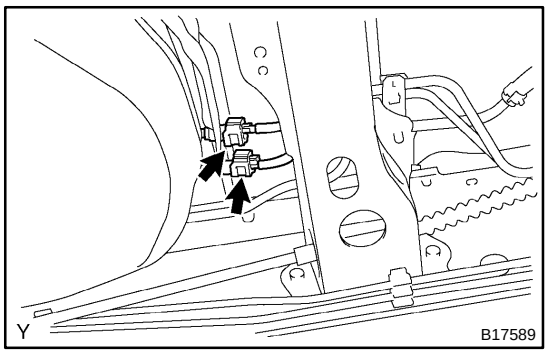

6. DISCONNECT FUEL MAIN TUBE AND RETURN TUBE
(See page SF−1)

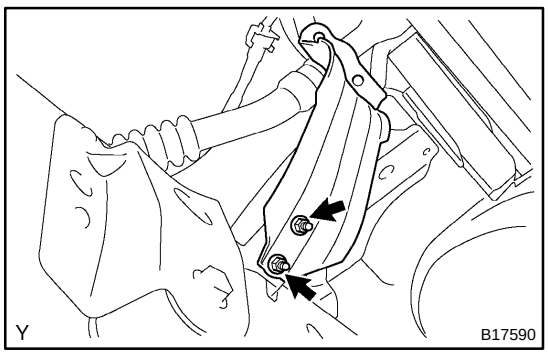

7. REMOVE FUEL TANK ASSEMBLY

(a) Set up a transmission jack under the fuel tank.

(b) Remove the 2 nuts and disconnect the fuel pipe bracket from the body.

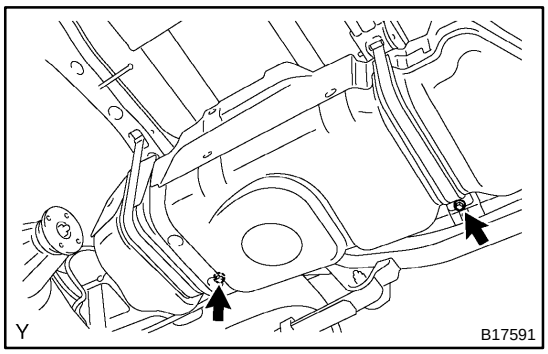

(c) Remove the 2 bolts and disconnect the 2 fuel tank bands from the fuel tank.

(d) Operate the transmission jack and remove the fuel tank.

8. REMOVE FUEL PUMP ASSEMBLY

(See page SF−11)

SF12Z−06

COMPONENTS

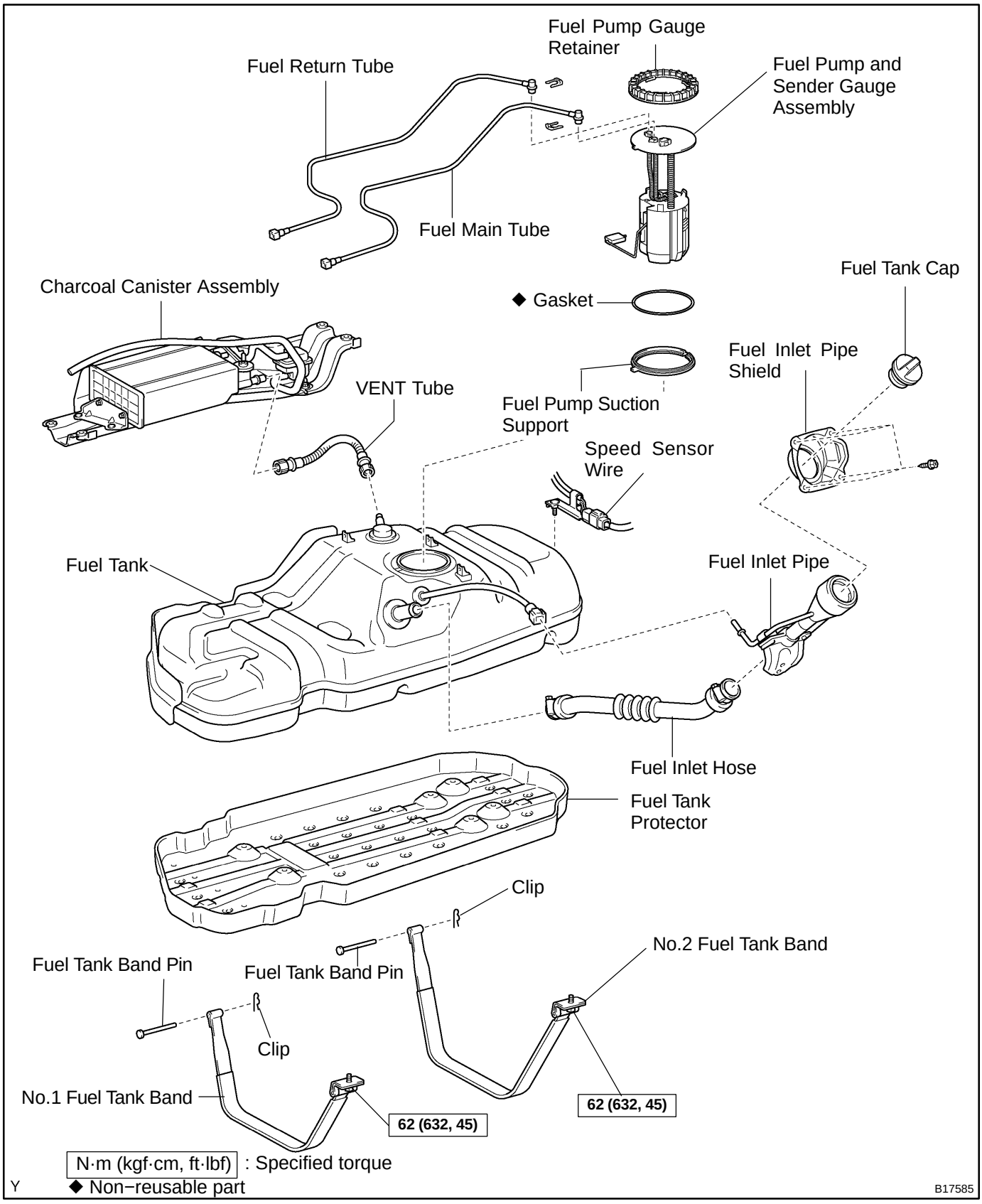

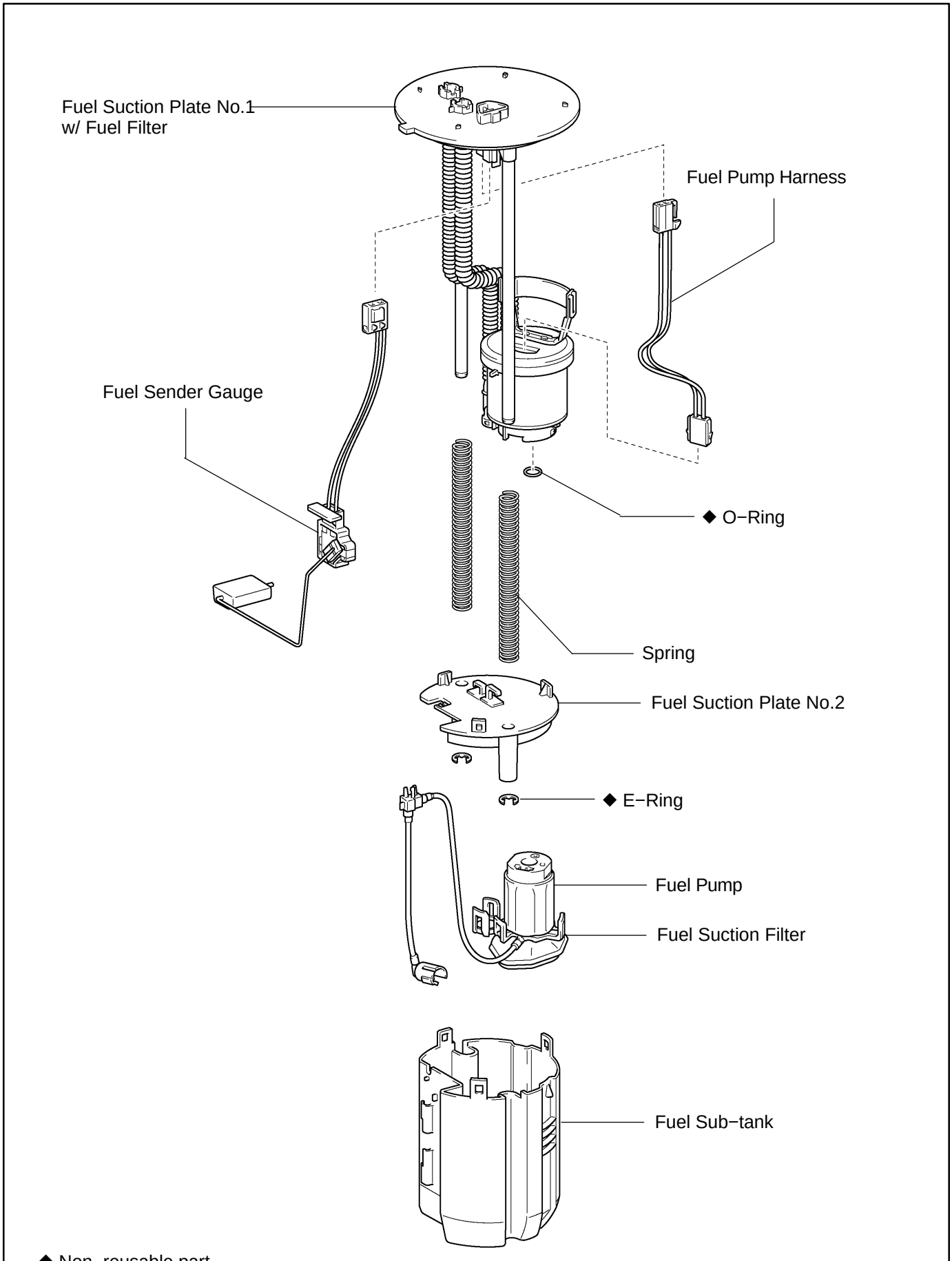
Fuel Suction Plate No.1
w/ Fuel Filter
Fuel Pump Harness
Fuel Sender Gauge
◆ O−Ring
Spring
Fuel Suction Plate No.2
◆ E−Ring
Fuel Pump
Fuel Suction Filter
Fuel Sub−tank
◆ Non−reusable part
Y
B17535

SF1XE−02

DISASSEMBLY

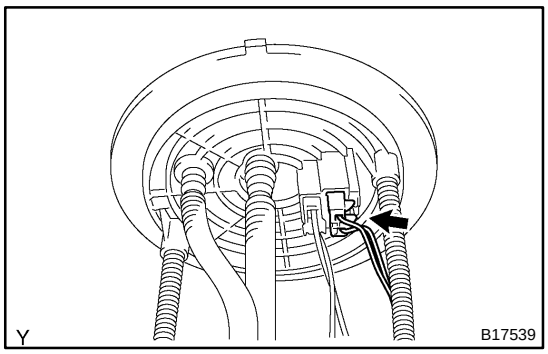

1. REMOVE FUEL SENDER GAGE

(a) Disconnect the sender gage connector from the fuel suction plate No.1.

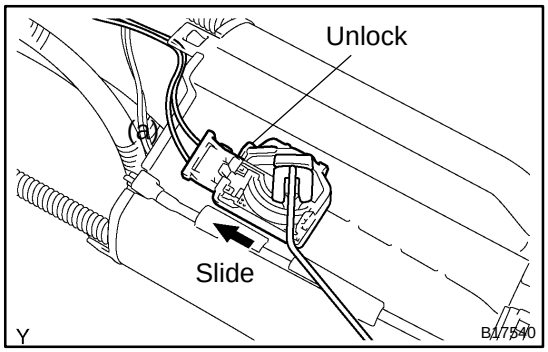

(b) Unlock the fuel sender gage and slide the remove.

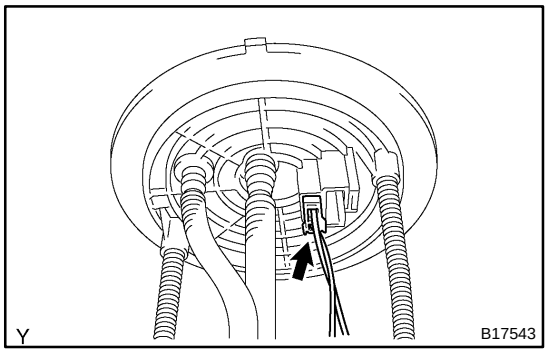

2. REMOVE FUEL SUB−TANK

(a) Disconnect the fuel pump harness connector from the fuel suction plate No.1.

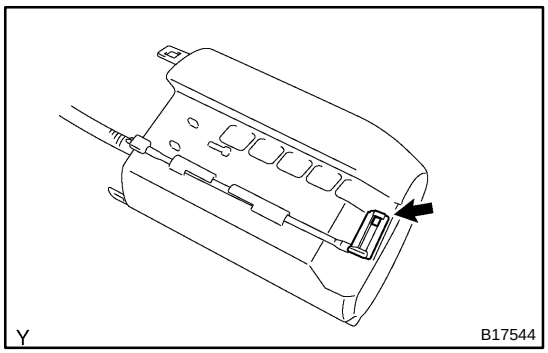

(b) Disconnect the suction filter hose from the fuel sub−tank.

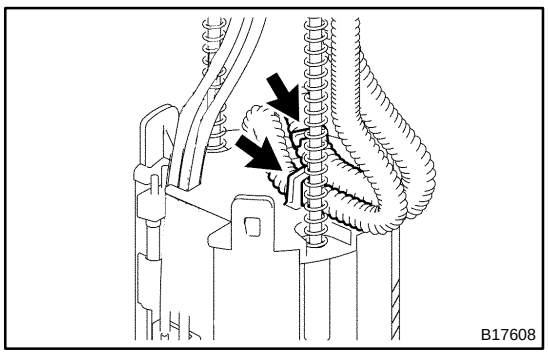

(c) Disconnect the 2 tubes from the tube clamps.

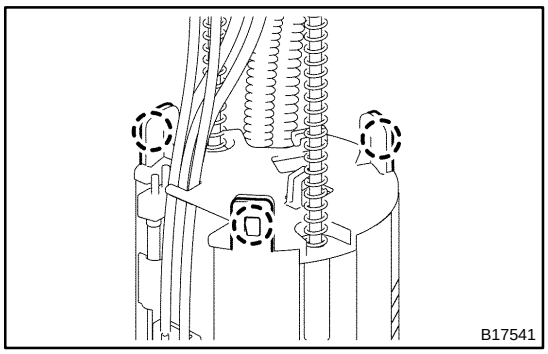

(d) Using a screwdriver with the tip wrapped in tape, disconnect the 3 snap−claws from the fuel suction support No.2.

NOTICE:

Do not damage the fuel suction plate No.2 or fuel sub−tank.

(e) Disconnect the fuel suction plate No.1 with the fuel filter assembly from the fuel sub−tank.

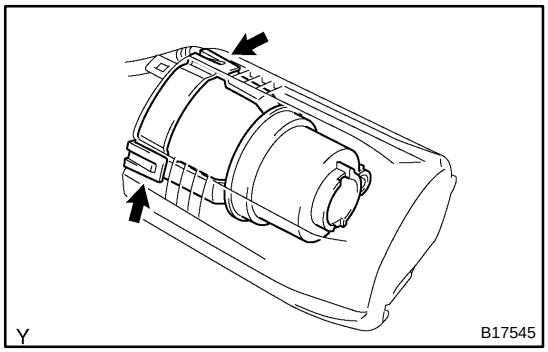

3. REMOVE FUEL FILTER WITH FUEL PUMP

(a) Using a screwdriver with the tip wrapped in tape, disconnect the 2 snap−claws from the fuel suction support.

NOTICE:

Do not damage the fuel filter assembly or fuel suction support.

(b) Remove the fuel filter assembly with fuel pump from the fuel suction support.

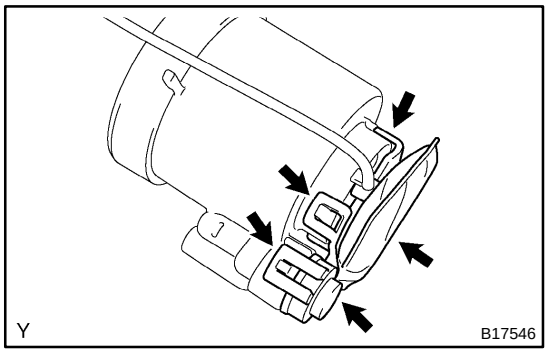

4. REMOVE FUEL PUMP

(a) Using a screwdriver with the tip wrapped in tape, disconnect the 5 snap−claws from the suction filter.

NOTICE:

Do not damage the fuel filter assembly or suction filter.

(b) Remove the fuel suction filter with fuel pump from the fuel filter.

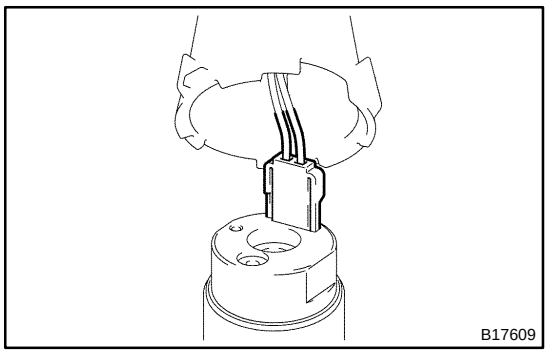

(c) Disconnect the fuel pump harness from the fuel pump.

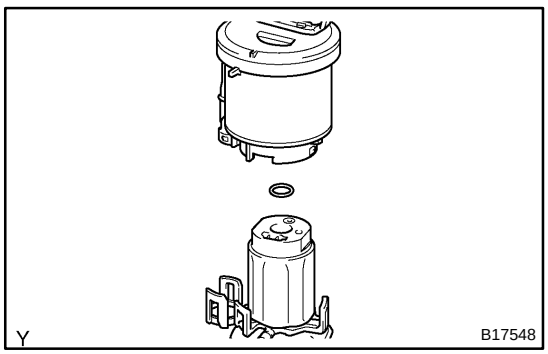

(d) Remove the O−ring from the fuel filter or fuel pump.

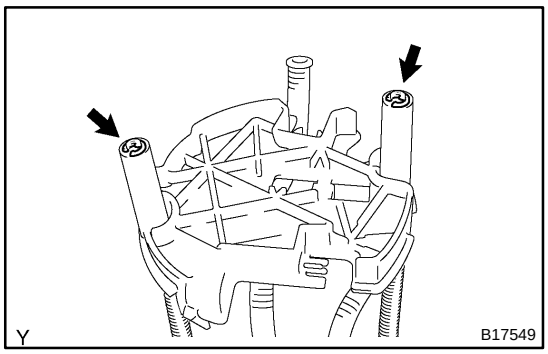

5. REMOVE FUEL SUCTION PLATE NO.2

(a) Using a screwdriver, remove the 2 E−rings from the suction plate No.2.

(b) Remove the suction plate No.2 and 2 springs from the fuel suction plate No.1.

SF131−04

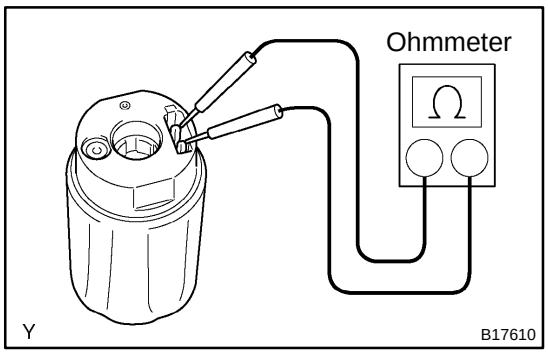

INSPECTION

1. INSPECT FUEL PUMP RESISTANCE

Using an ohmmeter, measure the resistance between the terminals.

Resistance: 0.2 − 3.0 Ω at 20˚C (68˚F)

If the resistance is not as specified, replace the fuel pump.

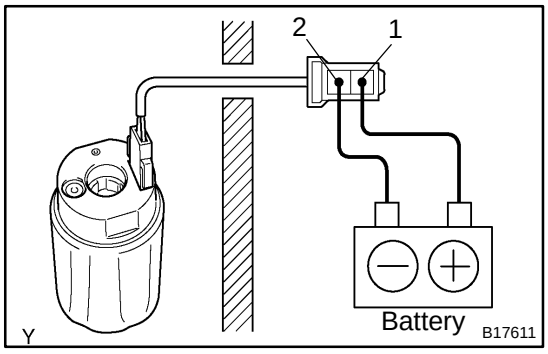

2. INSPECT FUEL PUMP OPERATION

(a) Connect the lead wire to the fuel pump.

(b) Connect the positive (+) lead from the battery to terminal 1 of the connector, and the negative (−) lead to terminal 2. Check that the fuel pump operates.

NOTICE:

- **These tests must be done quickly (within 10 seconds) to prevent the coil from burning out.**
- **Keep the fuel pump as far away from the battery as possible.**
- **Always do switching at the battery side.**

If operation is not as specified, replace the fuel pump and/or read wire.

(c) Disconnect the lead wire to the fuel pump.

SF1XG−02

INSTALLATION

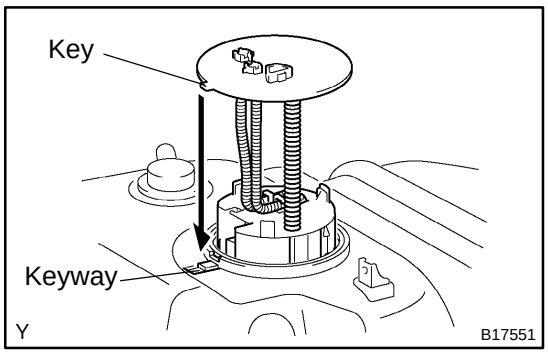

1. INSTALL FUEL PUMP ASSEMBLY

(a) Install a new gasket to the fuel tank.

(b) Install the fuel pump assembly to the fuel tank.

NOTICE:

Be careful not to bend the arm of the fuel sender gage.

(c) Align the keyway of the fuel suction tube support with the key of the fuel suction plate No.1.

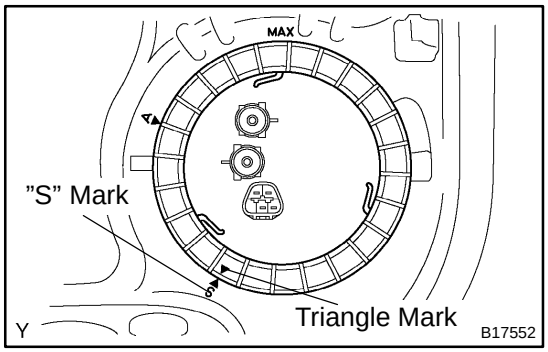

(d) Apply MP grease to the entire interior surface of the fuel pump gage retainer.

(e) Align the triangle mark on new fuel pump gage retainer with the ”S” mark on the fuel tank while pushing down the fuel suction tube, attach the fuel pump gage retainer.

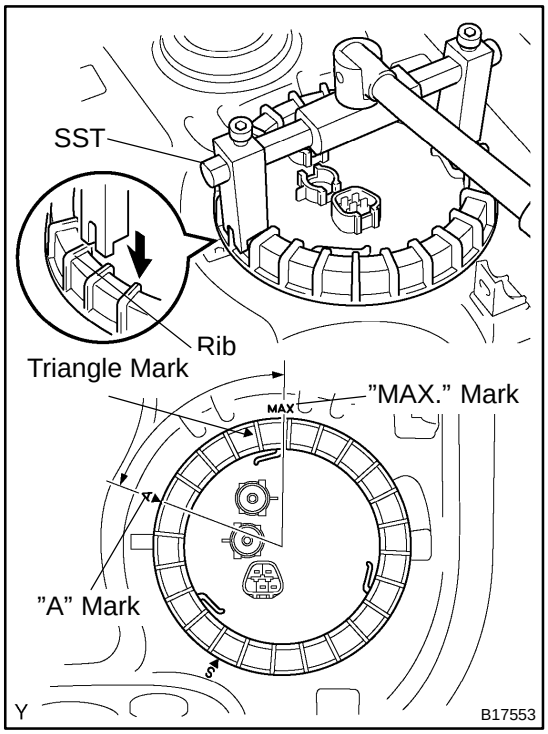

(f) Rotate the fuel pump gage retainer by hand, then tighten it one complete turn and half using SST. Triangle mark on the fuel pump gage retainer must be positioned between ”A” and ”MAX.” indications on the fuel tank.

SST 09808−14020 (09808−01410, 09808−01420, 09808−01430)

NOTICE:

Do not use other tools in this operation. Damage to the fuel pump gage retainer and the fuel tank may result.

HINT:

A rib on the fuel pump gage retainer can be fitted into a tip of the SST.

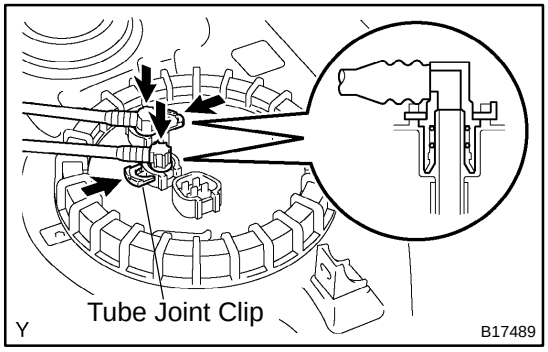

2. CONNECT FUEL SUCTION TUBE

Connect the fuel pump tube and return tube to the fuel tank with the tube joint clips.

NOTICE:

- **Check that there are no scratches or foreign objects on the connecting part.**
- **Check that the fuel tube joint is inserted securely.**
- **Check that the tube joint clip is on the collar of the fuel tube joint.**
- **After installing the tube join clip, check that the fuel tube joint has not been pulled off.**

3. **CHECK FOR FUEL LEAKS**
4. **INSTALL FUEL TANK ASSEMBLY (See page SF−37)**

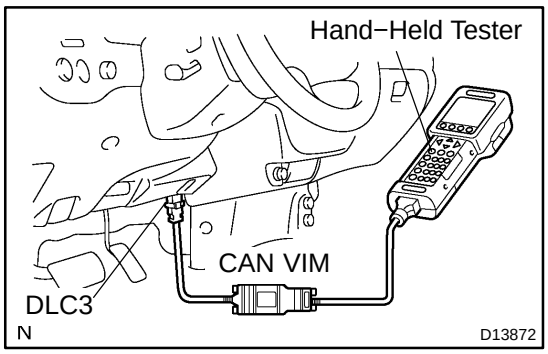

FUEL PUMP

SF12Y−06

ON−VEHICLE INSPECTION

1. CHECK FUEL PUMP OPERATION

(a) Connect a hand−held tester to the Controller Area Network Vehicle Interface Module (CAN VIM). Then connect the CAN VIM to the Date Link Connector 3 (DLC3).

(b) Turn the ignition switch ON, and push the hand−held tester main switch ON.

NOTICE:

Do not start the engine.

(c) Enter the following menus: DIAGNOSIS / ENHANCED OBD II / ACTIVE TEST / FUEL PUMP / SPD.

(d) Please refer to the hand−held tester operator's manual for further details.

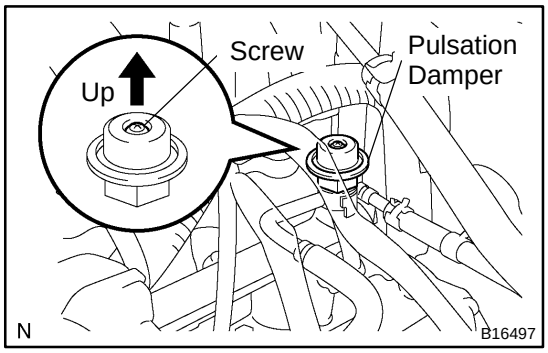

(e) Check that the pulsation damper screw rises up when the fuel pump operates.

If operation is not as specified, check the fusible link, fuses, EFI main relay, fuel pump, ECM and wiring connections.

(f) Turn the ignition switch OFF.

(g) Disconnect the hand−held tester and CAN VIM from the DLC3.

2. CHECK FUEL PRESSURE

(a) Check the battery positive voltage is above 12 V.

(b) Disconnect the negative (−) terminal cable from the battery.

(c) Remove the front fuel pipe from the LH delivery pipe (see page SF−27).

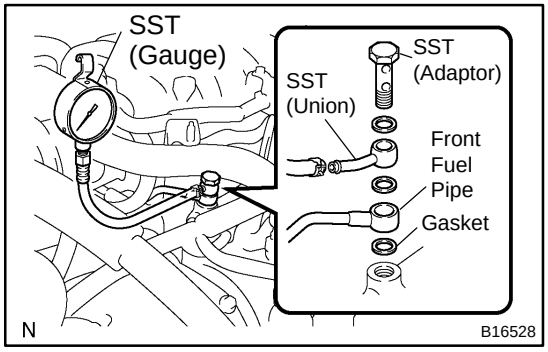

(d) Install the front fuel pipe and SST (pressure gauge) to the delivery pipe with 3 lower gaskets and SST (adaptor).
SST 09268−45014 (09268−41190, 90405−06167)
Torque: 39 N·m (400 kgf·cm, 29 ft·lbf)

(e) Wipe off any splattered gasoline.

(f) Reconnect the negative (−) terminal cable to the battery.

(g) Connect a hand−held tester to the DLC3. (See step 1 in check fuel pump operation (a) to (e))

(h) Measure the fuel pressure.
Fuel pressure:
265 − 304 kPa (2.7 − 3.1 kgf/cm^2, 38 − 44 psi)

If pressure is high, replace the fuel pressure regulator.
If pressure is low, check the fuel hoses and connections, fuel pump, fuel filter and fuel pressure regulator.

(i) Disconnect the hand−held tester from the DLC3.
(j) Start the engine.
(k) Measure the fuel pressure at idle.
Fuel pressure:
265 − 304 kPa (2.7 − 3.1 kgf/cm^2, 38 − 44 psi)
(l) Stop the engine.
(m) Check that the fuel pressure remains as specified for 5 minutes after the engine has stopped.
Fuel pressure: 147 kPa (1.5 kgf/cm^2, 21 psi) or more

If pressure is not as specified, check the fuel pump, pressure regulator and/or injectors.

(n) After checking fuel pressure, disconnect the negative (−) terminal cable from the battery and carefully remove the SST to prevent gasoline from splashing.
SST 09268−45014
(o) Reinstall the front fuel pipe to the LH delivery pipe. (see page SF−31)

3. CONNECT CABLE TO NEGATIVE BATTERY TERMINAL

4. INSPECT FOR FUEL LEAKS (See page SF−1)

SF1XF−02

REASSEMBLY

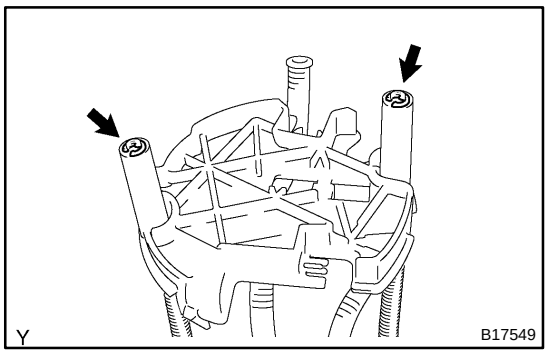

1. REMOVE FUEL SUCTION PLATE NO.2

(a) Install the 2 springs and suction plate No.2 to the suction plate No.1.

(b) Using a needle−nose pliers, install the 2 new E−rings to the suction plate No.2.

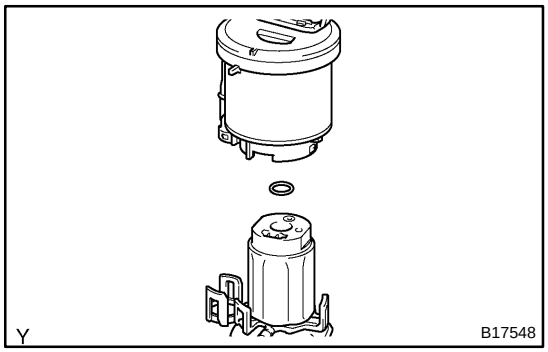

2. INSTALL FUEL PUMP

(a) Apply a light coat of gasoline or spindle oil to a new O−ring, and install it to the fuel pump.

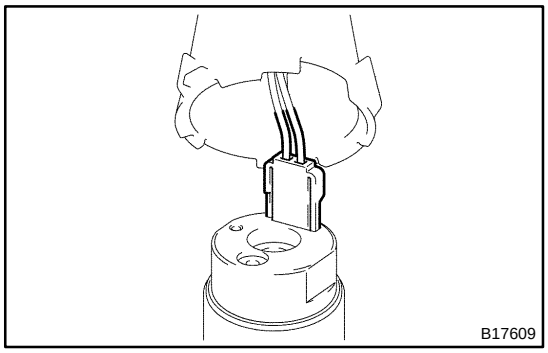

(b) Connect the fuel pump harness connector to the fuel pump.

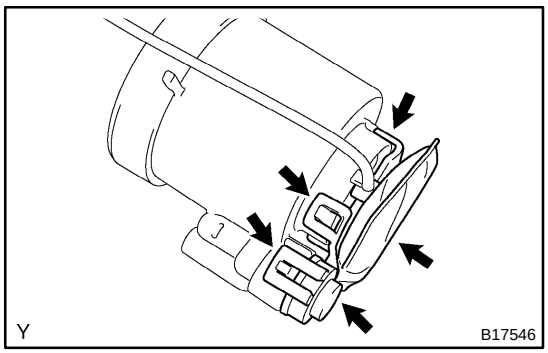

(c) Install the fuel pump with the suction filter to the fuel fuel filter.

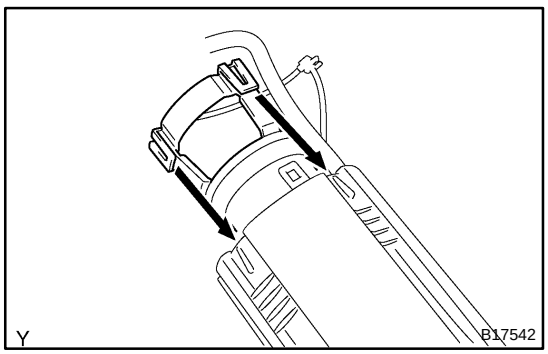

3. INSTALL FUEL FILTER

Install the fuel filter to the fuel sub−tank.

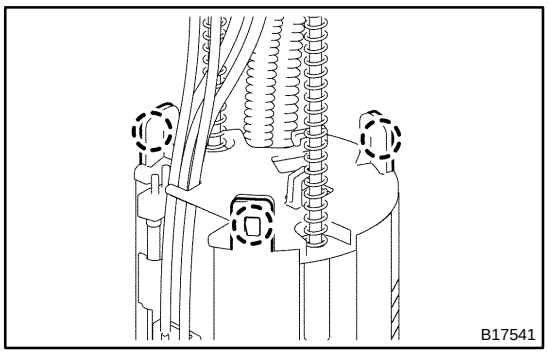

4. INSTALL FUEL SUB−TANK

(a) Connect the fuel suction plate No.2 to the fuel sub−tank with the 3 snap−claws engaged.

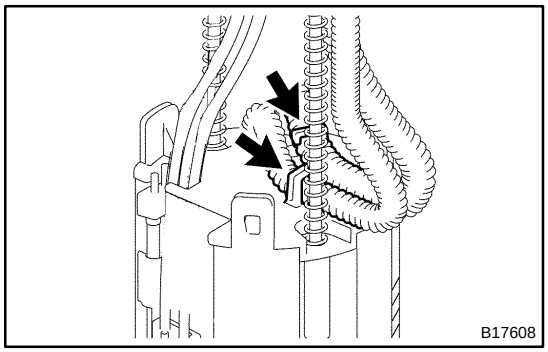

(b) Connect the 2 tubes to the tube clamps.

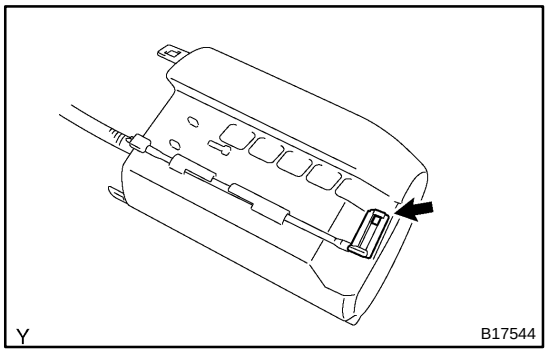

(c) Connect the suction filter hose to the fuel sub−tank.

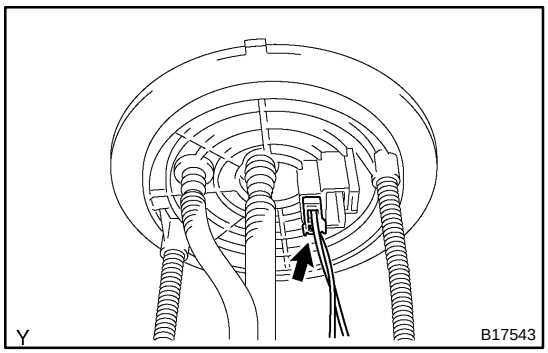

(d) Connect the fuel pump harness connector to the fuel suction plate No.1.

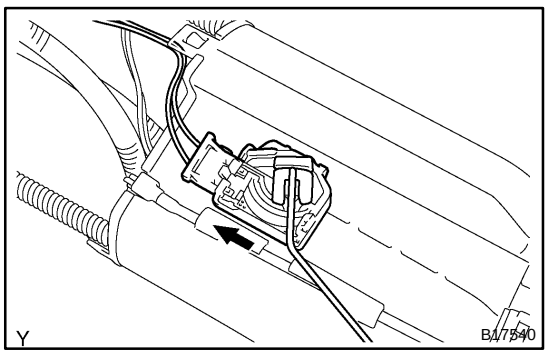

5. INSTALL FUEL SENDER GAGE

(a) Install the fuel sender gage to the fuel suction support.

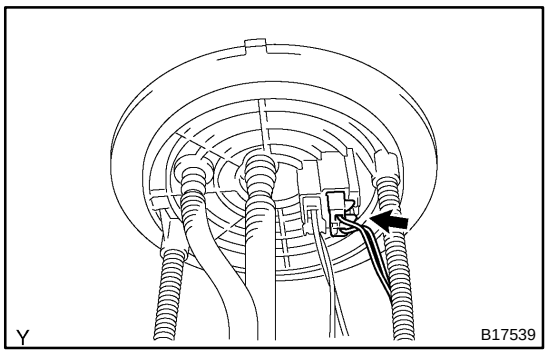

(b) Connect the sender gage connector to the fuel suction plate No.1.

SF130−05

REMOVAL

1. REMOVE FUEL TANK ASSEMBLY (See page SF−34)

2. DISCONNECT FUEL SUCTION TUBE

Remove the 2 tube clips, and pull out the 2 fuel tubes.

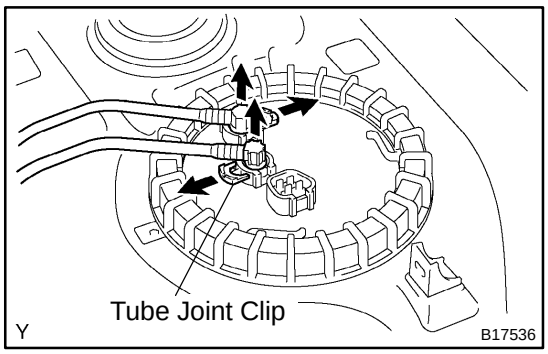

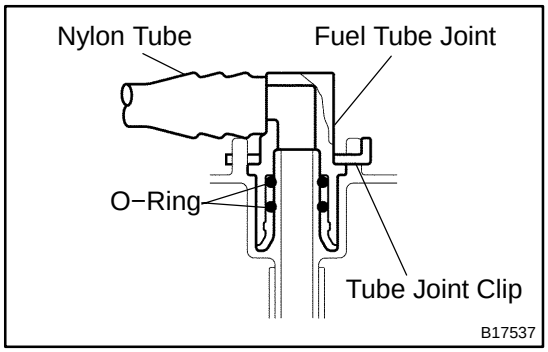

NOTICE:

- **Before this operation, check the connector for dirt, mud or other contamination. Clean if necessary.**
- **Be careful of mud. The connector's O−ring, which seals the pipe and connector, becomes contaminated easily.**
- **Do not use any tool in this operation.**
- **Do not bend or twist the nylon tube. Protect the connector by covering it with a vinyl or plastic bag.**
- **When the pipe and connector are stuck, push and pull the connector to release and pull the connector out carefully.**

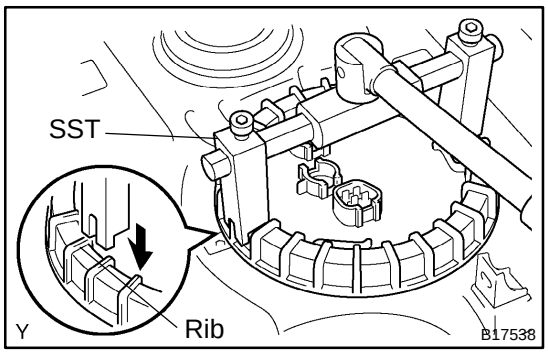

3. REMOVE FUEL PUMP ASSEMBLY

(a) Using SST, loosen the fuel pump gage retainer.

SST 09808−14020 (09808−01410, 09808−01420, 09808−01430)

HINT:

A rib on the fuel pump gage retainer can be fitted into a tip of the SST.

(b) Remove the fuel pump gage retainer.

(c) Remove the fuel suction tube.

NOTICE:

Be careful not to bend the arm of the fuel sender gage.

(d) Remove the gasket from the fuel tank.

HEATED OXYGEN SENSOR

SF0Y9−12

COMPONENTS

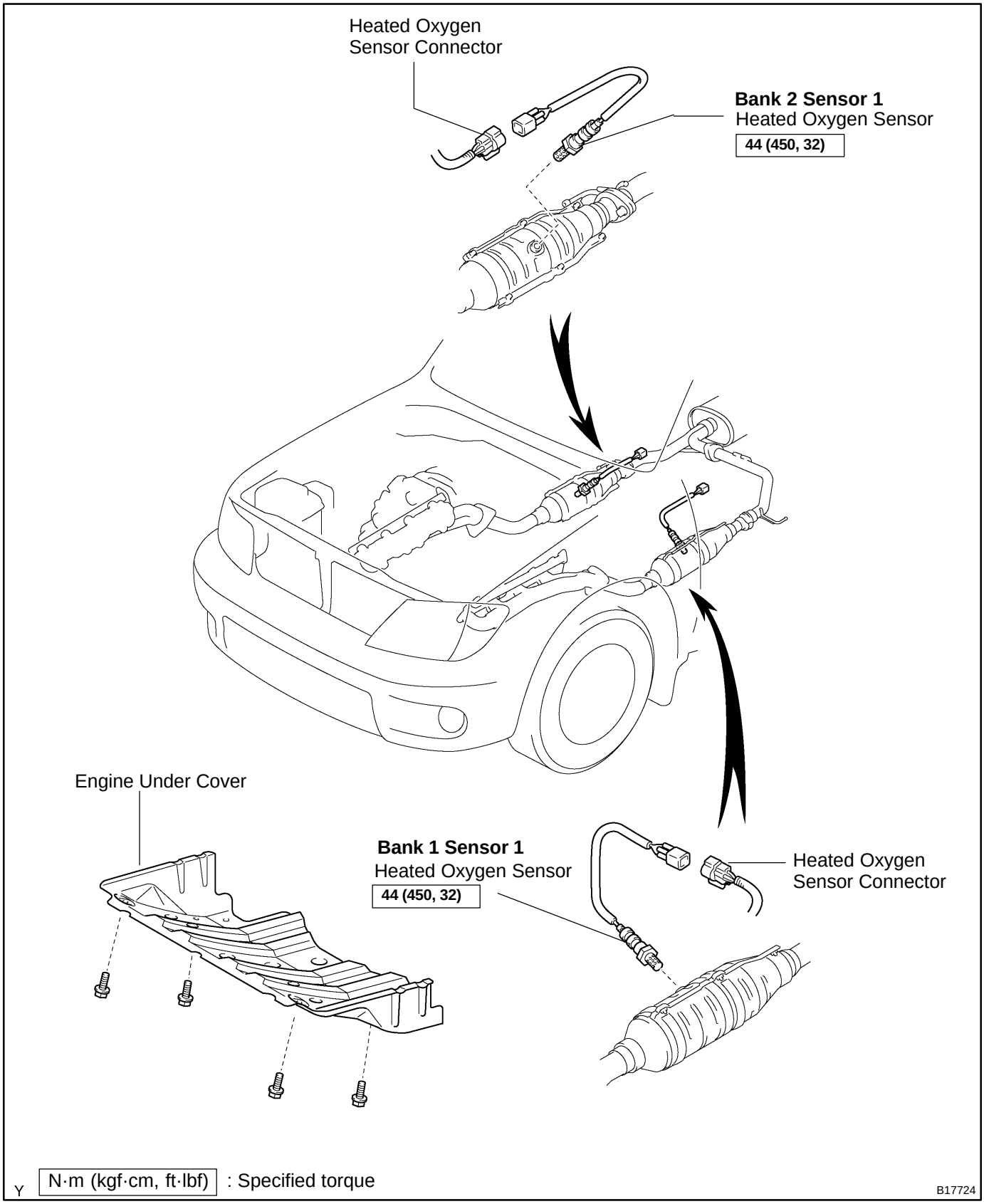

Y N·m (kgf·cm, ft·lbf) : Specified torque

B17724

SF0YA−15

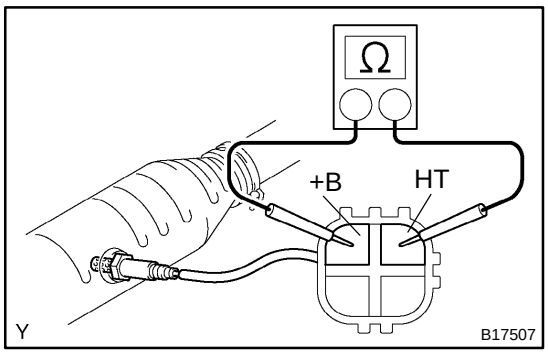

INSPECTION

1. INSPECT HEATER RESISTANCE OF HEATED OXYGEN SENSOR

(a) Disconnect the oxygen sensor connector.

(b) Using an ohmmeter, measure the resistance between terminals +B and HT.

Resistance: 11 to 16 Ω at 20˚C (68˚F)

If the resistance is not as specified, replace the sensor.

Torque: 44 N·m (450 kgf·cm, 32 ft·lbf)

(c) Reconnect the oxygen sensor connector.

2. INSPECT OPERATION OF HEATED OXYGEN SENSOR (See page DI−512)

SF0OS−15

COMPONENTS

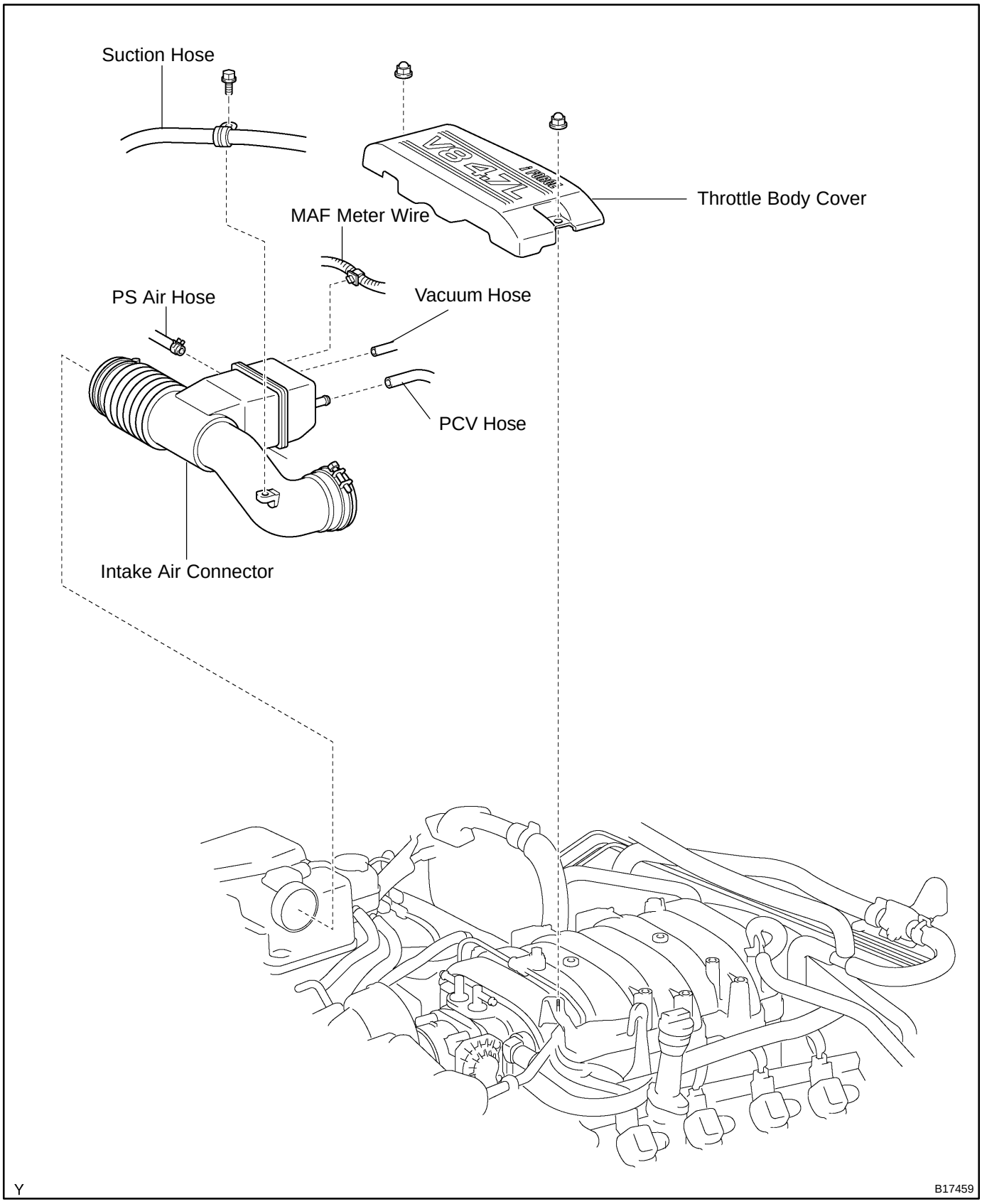

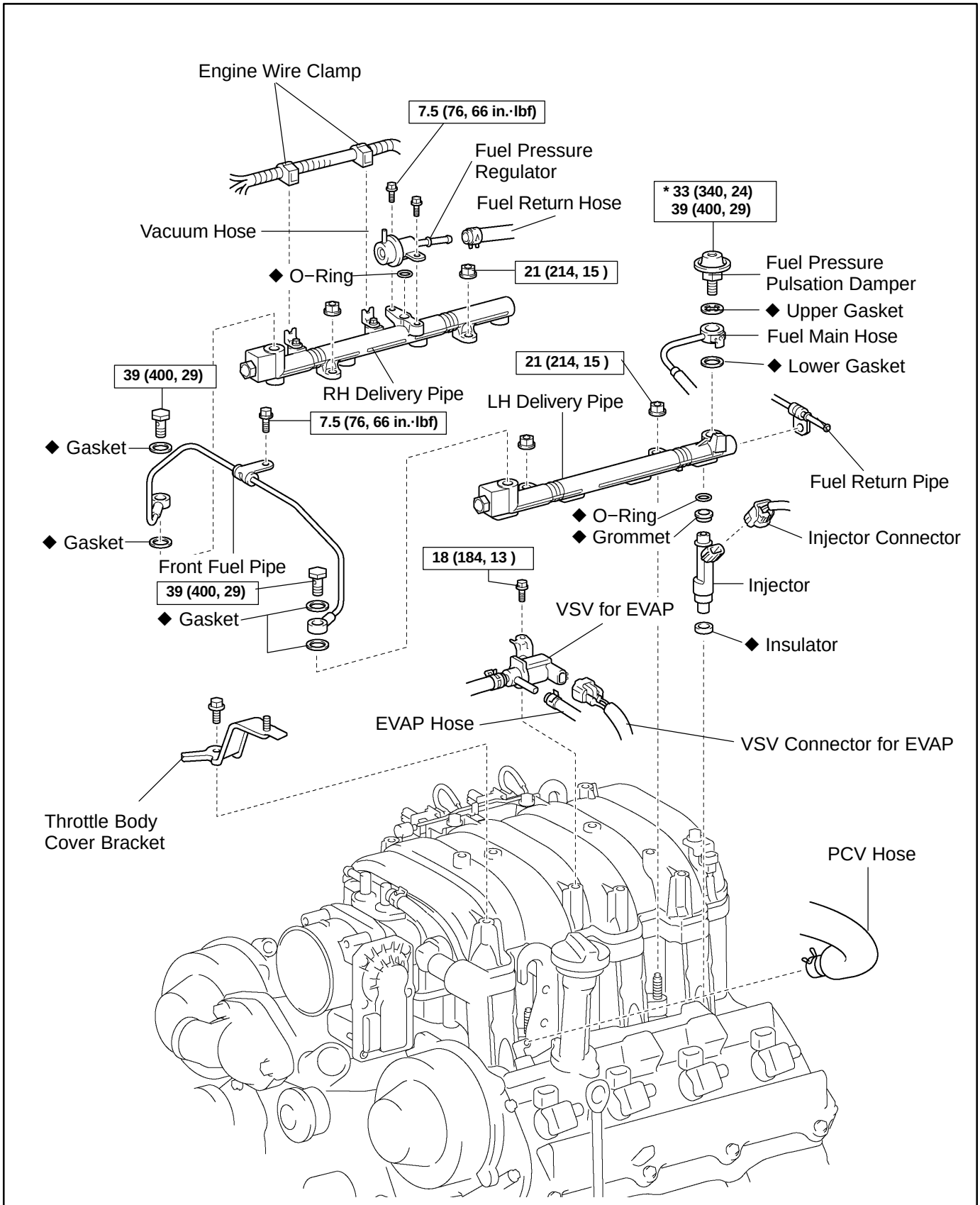

N·m (kgf·cm, ft·lbf) : Specified torque

◆ Non−reusable part

Y * For use with SST

B17460

SF134−04

INSPECTION

1. INSPECT INJECTOR INJECTION

CAUTION:

Keep the injector clean of sparks during the test.

(a) Disconnect the fuel inlet hose (fuel tube connector) from the fuel filter.

(b) Connect SST (attachment and hose) to the fuel tube.
SST 09268−41047 (09268−52011)

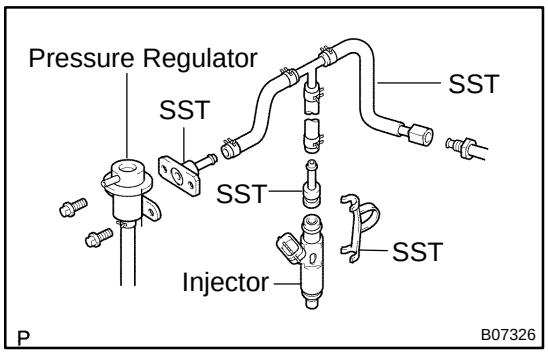

(c) Remove the pressure regulator from the delivery pipe.

(d) Install the O−ring to the fuel inlet of the pressure regulator.

(e) Connect SST (hose) to the fuel inlet of the pressure regulator with SST (union) and the 2 bolts.
SST 09268−41047 (09268−41091)
Torque: 7.5 N·m (76 kgf·cm, 66 in.·lbf)

(f) Connect the fuel return hose to the fuel outlet of the pressure regulator.

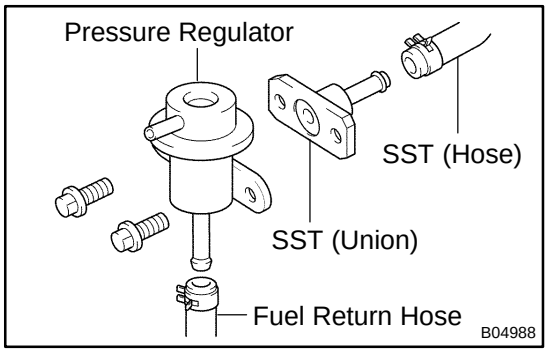

(g) Install the O−ring to the injector.

(h) Connect SST (adaptor and hose) to the injector, and hold the injector and union with SST (clamp).
SST 09268−41047 (09268−41110, 09268−41300)

(i) Put the injector into the graduated cylinder.

CAUTION:

Install a suitable vinyl hose onto the injector to prevent gasoline from splashing out.

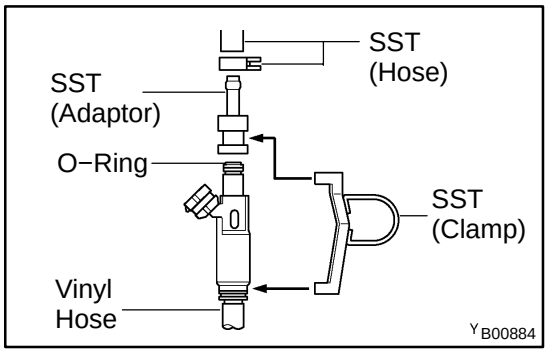

(j) Connect a hand−held tester to the Controller Area Network Vehicle Interface Module (CAN VIM). Then connect the CAN VIM to the Date Link Connector 3 (DLC3).

(k) Connect the battery negative (−) cable to the battery.

(l) Turn the ignition switch ON, and push the hand−held tester main switch ON.

NOTICE:

Do not start the engine.

(m) Enter the following menus: DIAGNOSIS / ENHANCED OBDII / ACTIVE TEST / FUEL PUMP / SPD

(n) Please refer to the hand−held tester operator's manual for further details.

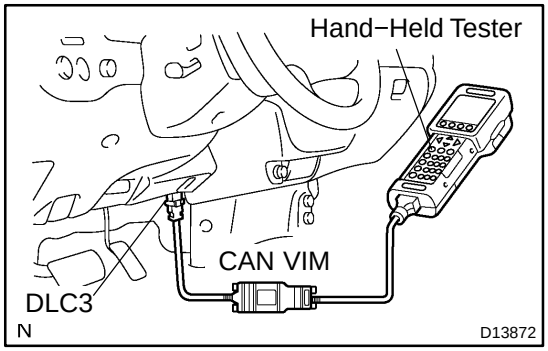

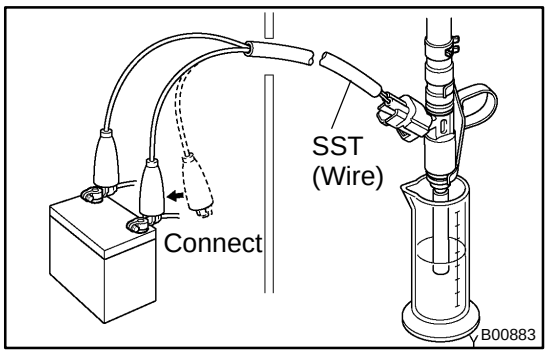

(o) Connect SST (wire) to the injector and battery for 15 seconds, and measure the injection volume with a graduated cylinder. Test each injector 2 or 3 times.
SST 09842−30070
Volume: 56 to 69 cm^3 (3.4 to 4.2 cu in.) per 15 seconds
Difference between each injector:
13 cm^3 (0.8 cu in.) or less

If the injection volume is not as specified, replace the injector.

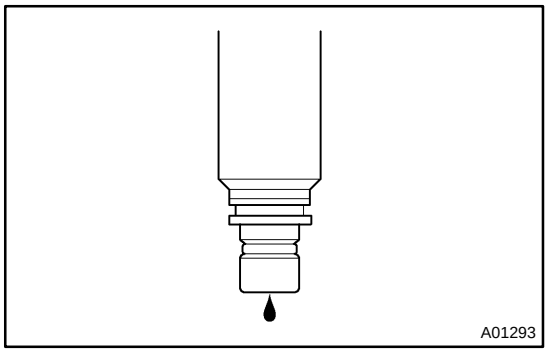

2. INSPECT LEAKAGE

(a) Under the above conditions, disconnect the tester probes of SST (wire) from the battery and check fuel leakage from the injector.
SST 09842−30070
Fuel drop: 1 drop or less per 12 minutes

(b) Turn the ignition switch off.

(c) Disconnect the negative (−) terminal cable from the battery.

(d) Remove the SST and fuel tube connector.
SST 09268−41047, 09842−30070

(e) Disconnect the hand−held tester and CAN VIM from the DLC3.

(f) Reconnect the fuel inlet pipe to the fuel tube.

SF135−07

INSTALLATION

1. INSTALL INJECTORS AND DELIVERY PIPES

NOTICE:

- **Be careful not to drop the injectors when installing the delivery pipes.**
- **Do not apply any load to the injector on horizontal direction.**

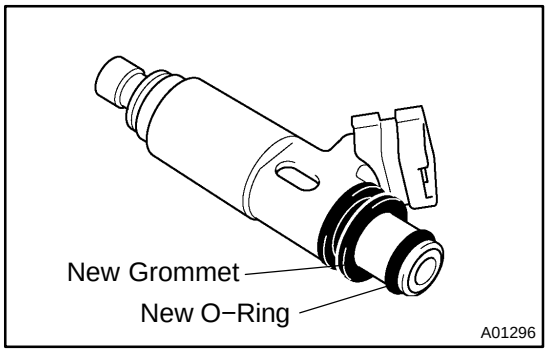

(a) Install a new grommet to each injector.
(b) Apply a light coat of gasoline to a new O−ring and install it to each injector.

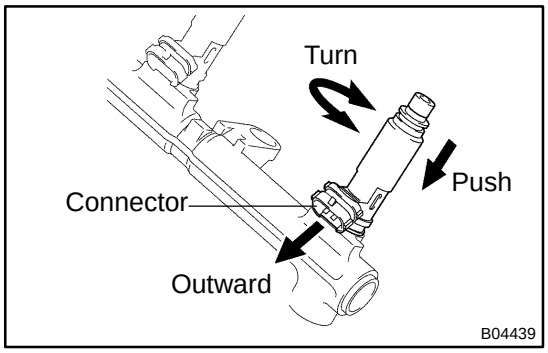

(c) While turning the injector clockwise and counterclockwise, push it to the delivery pipes. Install the 8 injectors.
(d) Position the injector connector outward.
(e) Place the 8 new insulators on the intake manifold.
(f) Place the 2 delivery pipes and injectors assemblies on the lower intake manifold.
(g) Temporarily install the 4 nuts.
(h) Install the front fuel pipe with the bolt, 4 new gaskets and 2 union bolts.
Torque:
39 N·m (400 kgf·cm, 29 ft·lbf) for union bolts
7.5 N·m (76 kgf·cm, 66 in.·lbf) for bolt

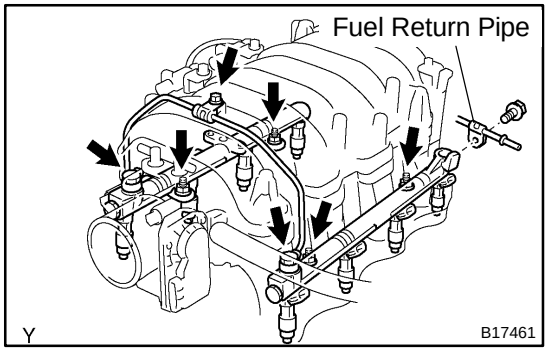

(i) Install the bolt holding the clamp on the fuel return pipe to the LH delivery pipe.
Torque: 7.5 N·m (76 kgf·cm, 66 in.·lbf)

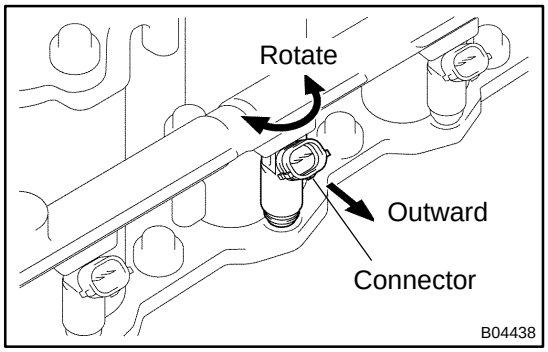

(j) Check that the injectors rotate smoothly.

HINT:

If the injectors do not rotate smoothly, the probable cause is incorrect installation of O−rings. Replace the O−ring of the injector that does not rotate smoothly.

(k) Position injector connector outward.
(l) Tighten the 4 nuts holding the delivery pipes to the lower intake manifold.
Torque: 21 N·m (214 kgf·cm, 15 ft·lbf)

(m) Connect the 8 injector connectors.

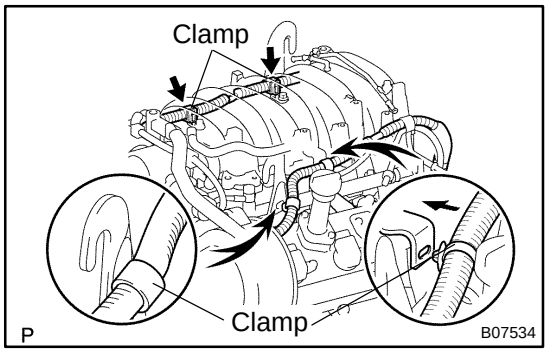

2. INSTALL ENGINE WIRES

(a) Install the 2 wire clamps on the engine wire to the brackets on the RH delivery pipe.

(b) Connect the engine wire clamps to the No.1 engine hanger and engine wire bracket.

(c) Install the engine wire protector with the 2 bolts.

3. CONNECT PCV HOSE TO PCV VALVE

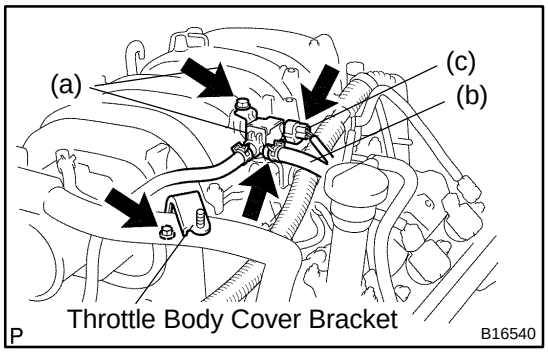

4. CONNECT VSV FOR EVAP TO UPPER INTAKE MANIFOLD

(a) Install the VSV for the EVAP to the upper intake manifold.

(b) Connect the EVAP hose.

(c) Connect the VSV connector for the EVAP.

5. INSTALL THROTTLE BODY COVER BRACKET

Install the throttle body cover bracket with the bolt.

6. INSTALL FUEL PRESSURE PULSATION DAMPER (See page SF−1)

7. INSTALL INTAKE AIR CONNECTOR

8. INSTALL THROTTLE BODY COVER

INJECTOR

SF0OR−12

ON−VEHICLE INSPECTION

1. REMOVE THROTTLE BODY COVER

2. REMOVE INTAKE AIR CONNECTOR

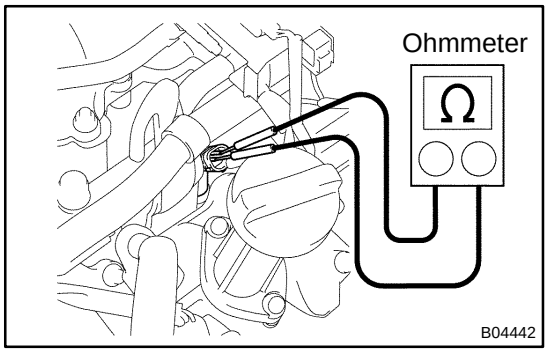

3. INSPECT INJECTOR RESISTANCE

(a) Disconnect the 8 injector connectors.

(b) Using an ohmmeter, measure the resistance between the terminals.

Resistance: 13.4 to 14.2 Ω at 20˚C (68˚F)

If the resistance is not as specified, replace the injector.

(c) Reconnect the 8 injector connectors.

4. REINSTALL INTAKE AIR CONNECTOR

5. REINSTALL THROTTLE BODY COVER

SF133−09

REMOVAL

1. DISCHARGE FUEL SYSTEM PRESSURE
(See page SF−1)

2. REMOVE THROTTLE BODY COVER

3. REMOVE INTAKE AIR CONNECTOR

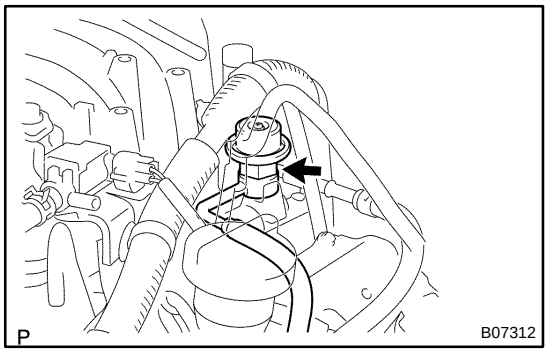

4. REMOVE FUEL PRESSURE PULSATION DAMPER

Remove the pulsation damper, upper gasket, fuel main hose and lower gasket.

NOTICE:

- **Put a shop rag under the delivery pipe.**
- **Slowly loosen the pulsation damper.**

5. DISCONNECT PCV HOSE FROM PCV VALVE

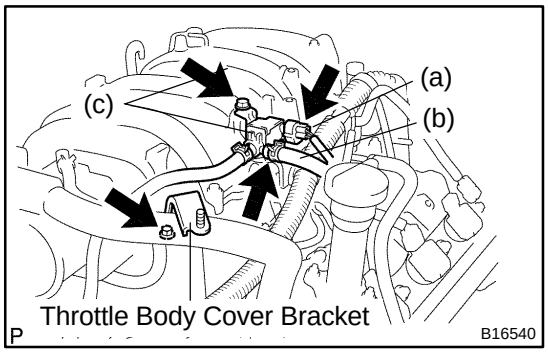

6. DISCONNECT VSV FOR EVAP

(a) Disconnect the VSV connector for EVAP.

(b) Disconnect the EVAP hose.

(c) Remove the VSV for EVAP from the intake manifold.

7. REMOVE THROTTLE BODY COVER BRACKET

Remove the bolt and throttle body cover bracket.

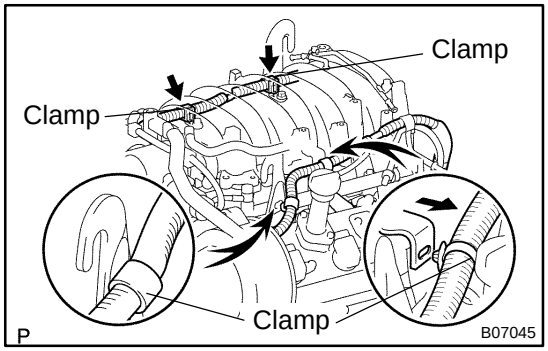

8. DISCONNECT ENGINE WIRES

(a) Disconnect the engine wire clamps from the No.1 engine hanger and engine wire bracket.

(b) Disconnect the 2 wire clamps on the engine wire from the brackets on the RH delivery pipe.

9. REMOVE DELIVERY PIPES AND INJECTORS

NOTICE:

- **Be careful not to drop the injectors when removing the delivery pipes.**
- **Do not apply any load to the injector in horizontal direction.**

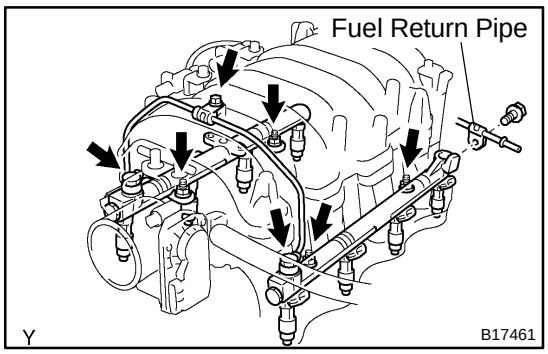

(a) Remove the bolt holding the clamp on the fuel return pipe to the LH delivery pipe.
(b) Remove the bolt, 2 union bolts, 4 gaskets and front fuel pipe.
(c) Disconnect the 8 injector connectors.
(d) Remove the 4 nuts holding the delivery pipes to the lower intake manifold.
(e) Remove the 2 delivery pipes, 8 injectors, and 8 insulators.
(f) Remove the O−ring and grommet from each injector.

KNOCK SENSOR

COMPONENTS

SF0PR−16

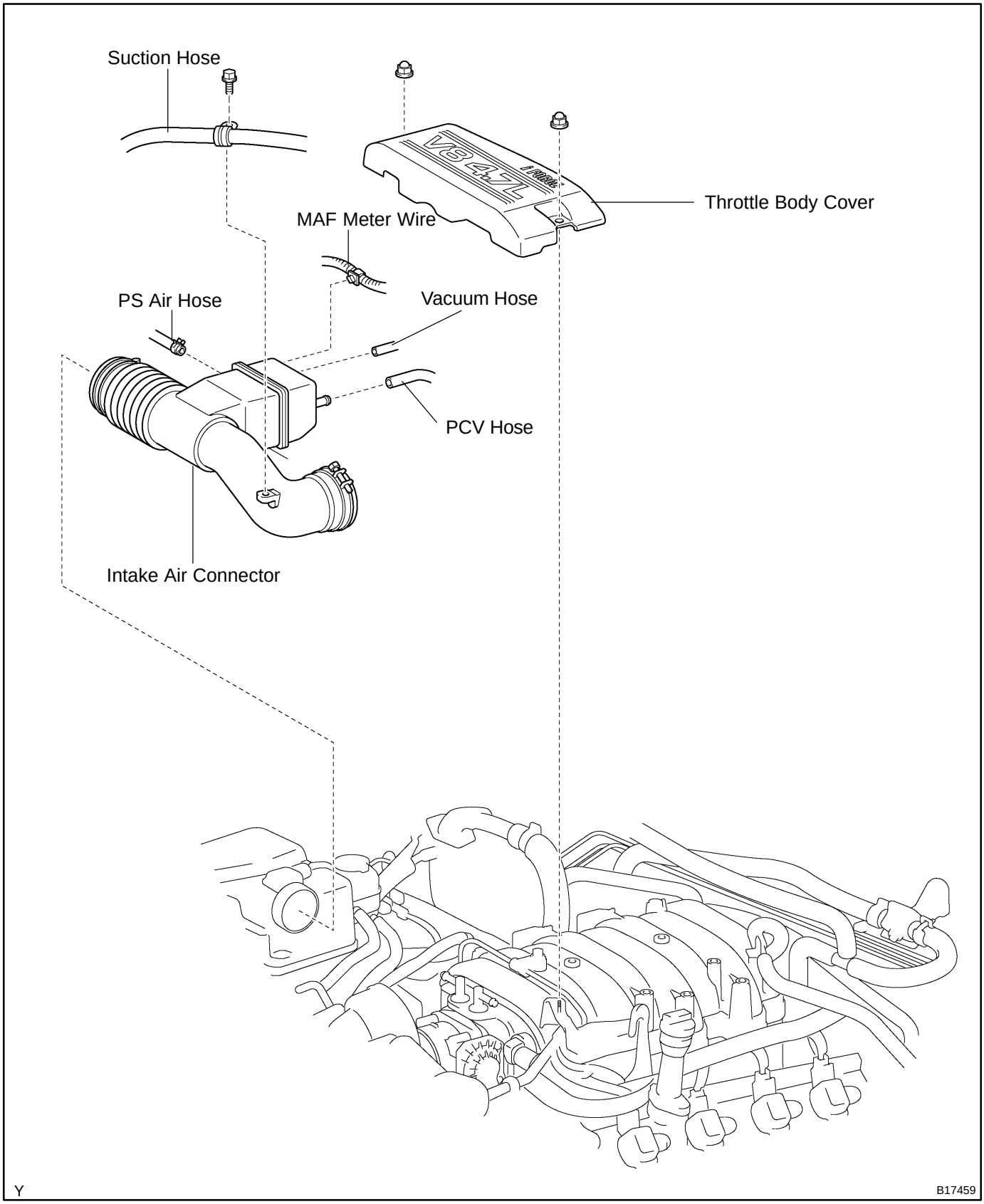

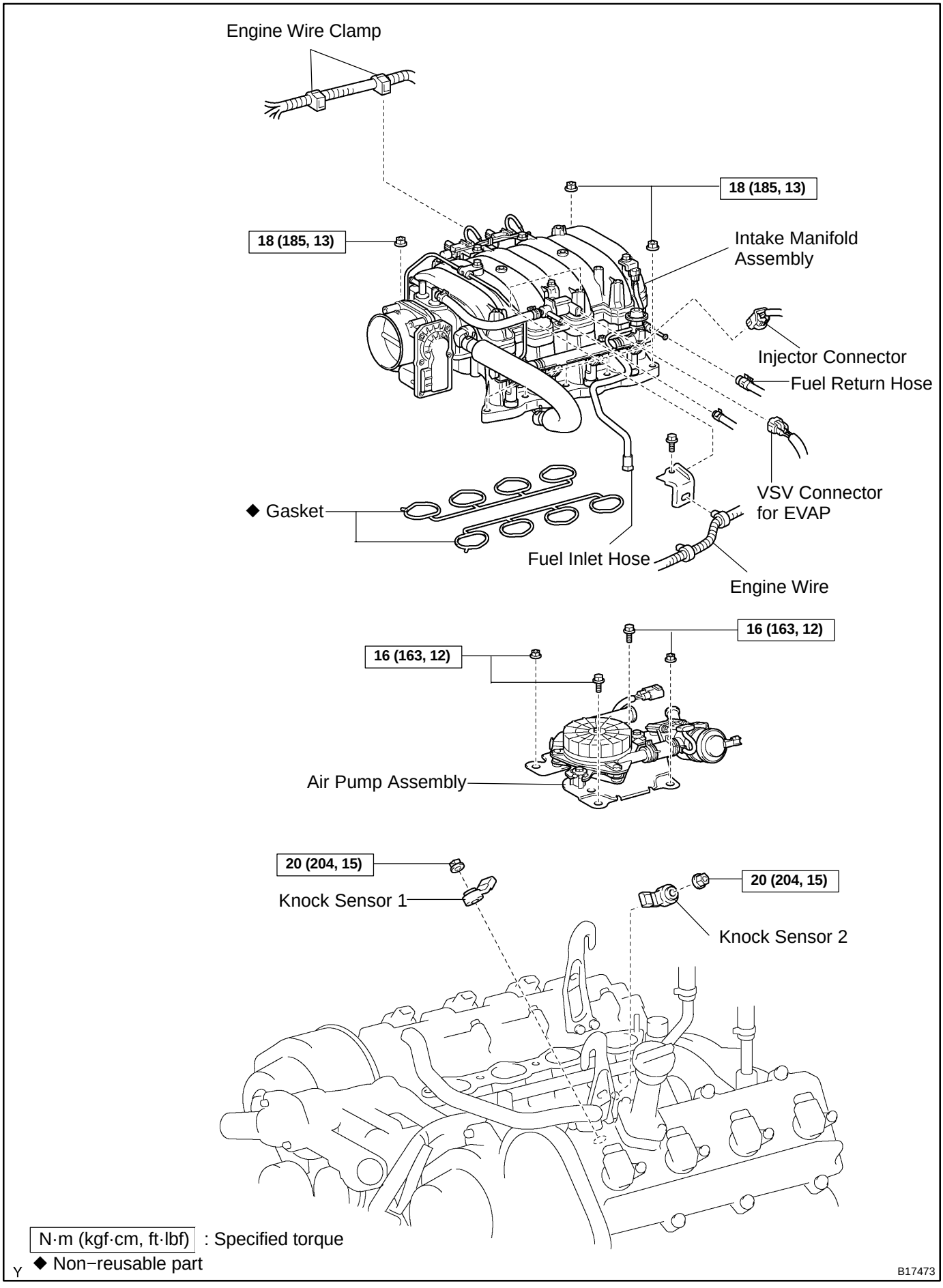
Engine Wire Clamp
18 (185, 13)
18 (185, 13)
Intake Manifold Assembly
Injector Connector
Fuel Return Hose
◆ Gasket
VSV Connector for EVAP
Fuel Inlet Hose
Engine Wire
16 (163, 12)
16 (163, 12)
Air Pump Assembly
20 (204, 15)
20 (204, 15)
Knock Sensor 1
Knock Sensor 2
N·m (kgf·cm, ft·lbf) : Specified torque
◆ Non−reusable part
Y
B17473

SF1XU−02

INSPECTION

1. REMOVE THROTTLE BODY COVER
2. REMOVE INTAKE AIR CONNECTOR
3. REMOVE INTAKE MANIFOLDS ASSEMBLY
   (See page EM−36)

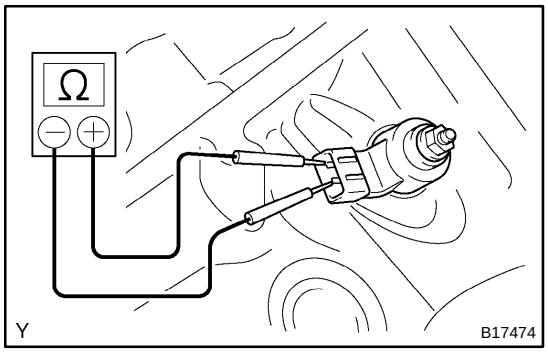

4. **INSPECT KNOCK SENSORS 1 AND 2**

(a) Disconnect the knock sensor connectors.

(b) Using an ohmmeter, measure the resistance between terminals.

Resistance: 120 to 280 kΩ at 20˚C (68˚F)

HINT:

If the resistance is not as specified, replace the sensor.

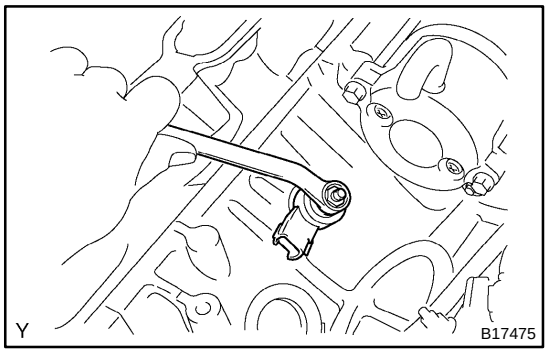

5. **REMOVE KNOCK SENSOR**

(a) Disconnect the 2 knock sensor connectors.

(b) Remove the 2 nuts and 2 knock sensors.

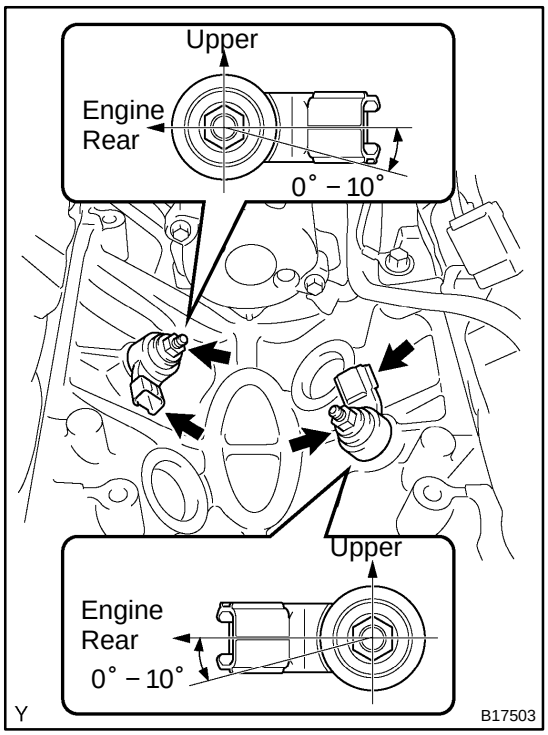

6. **INSTALL KNOCK SENSOR**

(a) Install the 2 knock sensors with the 2 nuts as shown in the illustration.

Torque: 20 N·m (204 kgf·cm, 15 ft·lbf)

(b) Connect the 2 knock sensor connectors.

7. **INSTALL INTAKE MANIFOLD ASSEMBLY**
   (See page EM−60)
8. **INSTALL INTAKE AIR CONNECTOR**
9. **INSTALL THROTTLE BODY COVER**

MASS AIR FLOW (MAF) METER

SF0P1−12

COMPONENTS

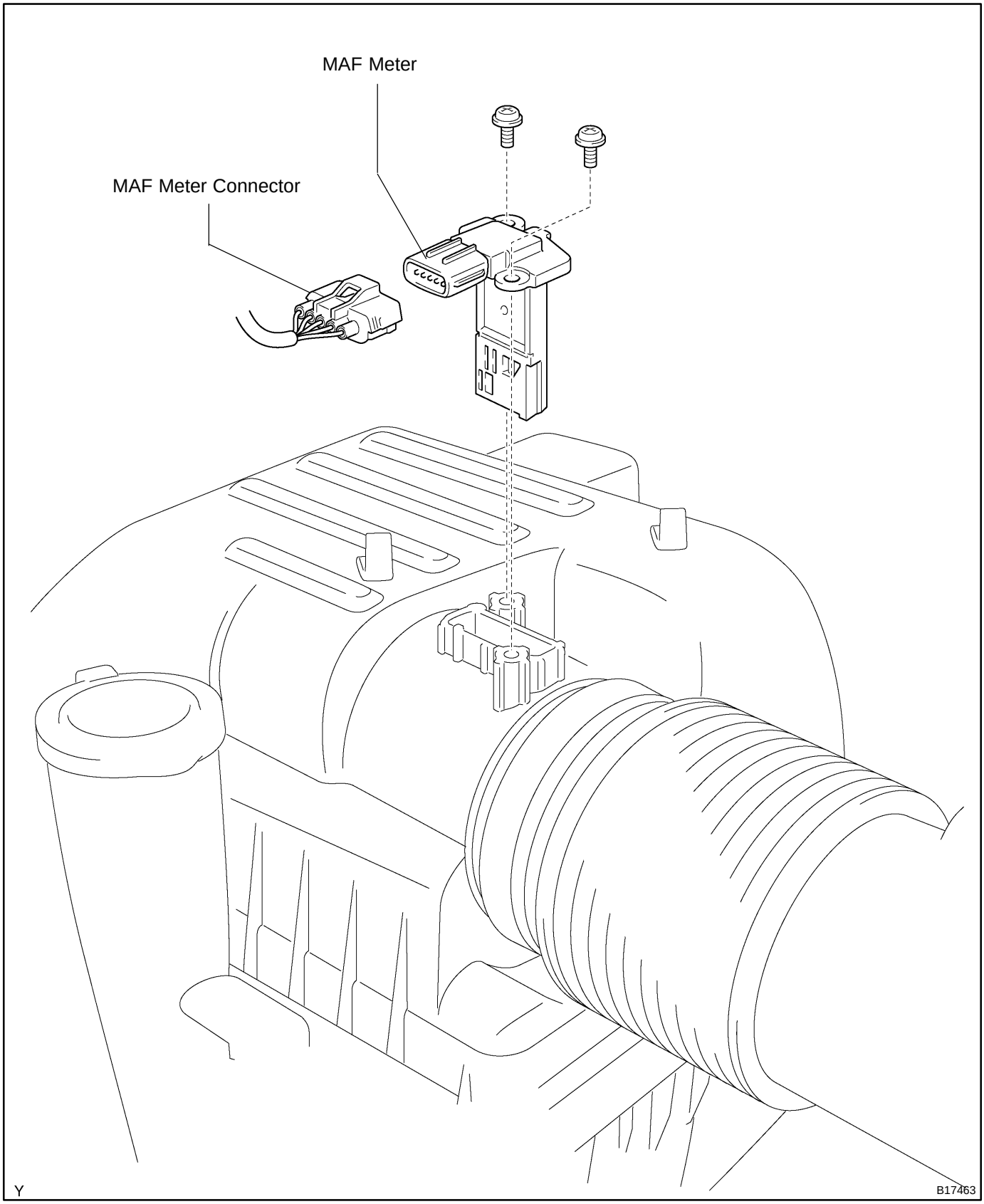

SF0P2−10

INSPECTION

1. INSPECT OUTPUT VOLTAGE

(a) Apply battery voltage across terminals 1 (+B) and 2 (E2G).

(b) Connect the positive (+) tester probe to terminal 3 (VG), and the negative (−) tester probe to terminal 2 (E2G).

(c) Blow air into the MAF meter, and check if the voltage fluctuates.

2. INSPECT RESISTANCE

Using an ohmmeter, measure the resistance between terminals 4 (THA) and 5 (E2).

Resistance:

12.5 to 16.9 kΩ at −20°C (−4°F)
2.19 to 2.67 kΩ at 20°C (68°F)
0.50 to 0.68 kΩ at 60°C (140°F)

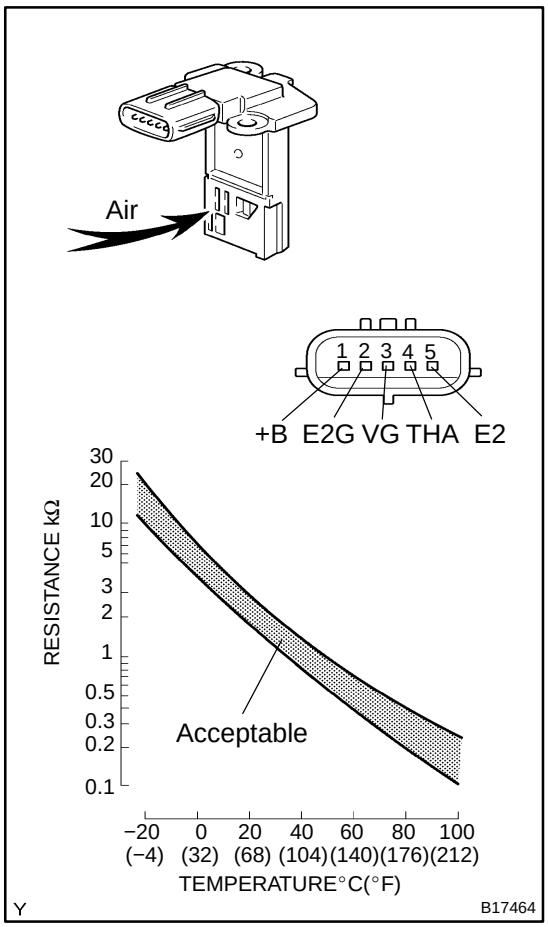

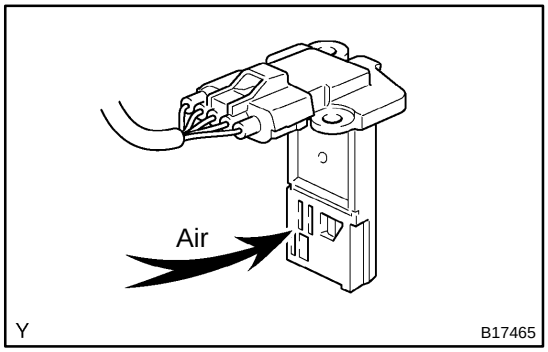

3. INSPECT MASS AIR FLOW METER

(a) If using a hand−held tester:

(1) Connect the hand−held tester to the DLC3.

(2) Turn the ignition switch to the ON position.

(3) Blow air into the MAF meter, and check that the air flow value of the CURRENT DATA changes.

If operation is not as specified, check the MAF meter (see page DI−531 and DI−534) as well as the wiring and the ECM.

(b) If not using a hand−held tester:

(1) Turn the ignition switch to the ON position.

(2) Connect the positive tester probe of the voltmeter to terminal VG of the ECM and the negative tester probe of the voltmeter to terminal E2G of the ECM.

(3) Blow air into the air flow meter, and check if the voltage fluctuates.

If operation is not as specified, check the MAF meter (see page DI−531 and DI−534), the wiring and the ECM.

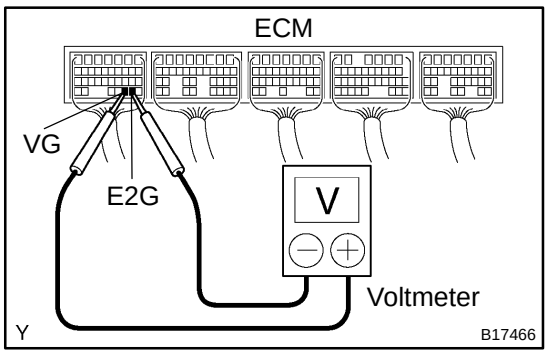

SFI SYSTEM

PRECAUTION

SF1XD−02

HINT:

All DTCs retained in the ECM will be erased when the negative (−) terminal cable is removed from the battery.

If necessary, read the DTC before removing the negative (−) terminal cable from the battery.

1. BEFORE WORKING ON FUEL SYSTEM, DISCONNECT CABLE FROM NEGATIVE (−) BATTERY TERMINAL

2. DO NOT SMOKE OR WORK NEAR AN OPEN FLAME WHEN WORKING ON FUEL SYSTEM

3. KEEP GASOLINE AWAY FROM RUBBER OR LEATHER PARTS

4. MAINTENANCE PRECAUTIONS

(a) To prevent engine misfire, these precautions should be taken.
  (1) Check the battery terminals are proper connected.
  (2) After repair, check that the ignition coil terminals and all other ignition system lines are reconnected securely.
  (3) When cleaning the engine compartment, be especially careful to protect the electrical system from water.

(b) Observe the following when handling the air fuel ratio sensors and oxygen sensor.
  (1) Do not drop the sensor or hit it against another object.
  (2) The sensor should be free from any contact with water.

5. IF VEHICLE IS EQUIPPED WITH MOBILE RADIO SYSTEM (HAM, CB, ETC.)

If the vehicle is equipped with a mobile communication system, refer to the precaution in the IN section.

6. AIR INDUCTION SYSTEM

(a) Removal of the engine oil dipstick, oil filler cap, PCV hose, may break the engine.

(b) Disconnection, looseness or cracks in the parts of the air induction system between the throttle body and cylinder head may result in air suction and break the engine.

7. ELECTRONIC CONTROL SYSTEM

(a) Before removing SFI wiring connectors, terminals, first disconnect the power by turning the ignition switch off or disconnecting the negative (−) terminal cable from the battery.

HINT:

Be sure to check DTCs before disconnecting the negative (−) terminal cable from the battery.

(b) When installing the battery, be especially careful to correctly connect the positive (+) and negative (−) cables.
(c) Do not give a severe impact to the SFI parts during removal or installation. Handle all SFI parts carefully, especially the ECM.
(d) Be careful during troubleshooting. Numerous transistor circuits are used and even slight terminal contact can cause further trouble.
(e) Do not open the ECM cover.
(f) When inspecting during rainy weather, take care to prevent entry of water. Also, when washing the engine compartment, prevent water from getting into the SFI parts and wiring connectors.
(g) Parts should be replaced as an assembly.
(h) Care should be taken when pulling out and inserting wiring connectors.
    (1) Release the lock and pull out the connector, pulling on the connectors.
    (2) Fully insert the connector and check that it is locked.

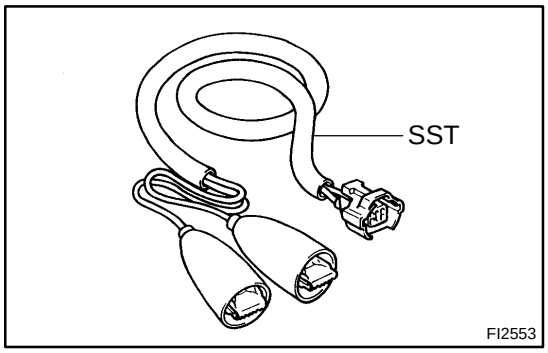

(i) Use SST for inspection or test of the injector or its wiring connector.
SST 09842−30070

8. FUEL SYSTEM

(a) When disconnecting the high fuel pressure line, a large amount of gasoline will spill out. Observe the following procedures:
    (1) Disconnect the circuit opening relay.
    (2) Start the engine. After the engine has stopped on its own, turn the ignition switch off.
    (3) Put a container under the connecting part of the pressure line.
    (4) Slowly loosen the connection.
    (5) Disconnect the high fuel pressure line.
    (6) Reconnect the fuel pump connector.

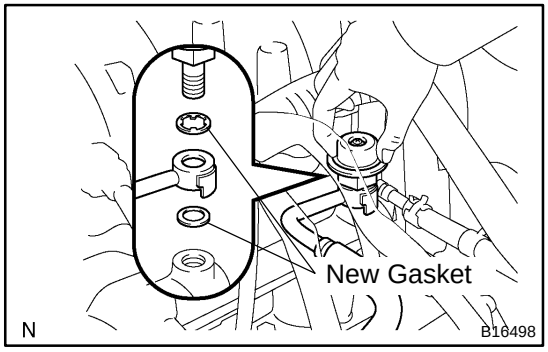

(b) When connecting the union bolt (fuel pressure pulsation damper) on the high pressure pipe union, observe the following procedures:
    (1) Always use 2 new gaskets.
    (2) Tighten the union bolt by hand.

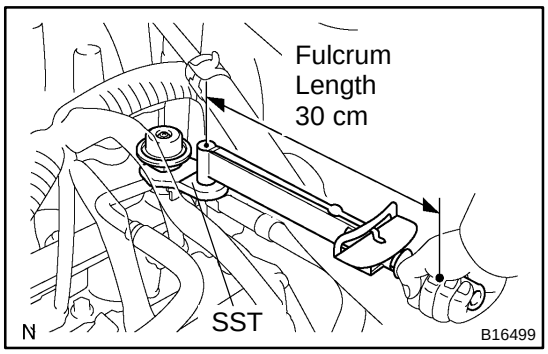

(3) Using SST, tighten the union bolt to the specified torque.

SST 09612−24014 (09617−24011)

Torque:

33 N·m (340 kgf·cm, 24 ft·lbf) for use with SST

39 N·m (400 kgf·cm, 29 ft·lbf)

HINT:

Use a torque wrench with a fulcrum length of 30 cm (11.81 in.).

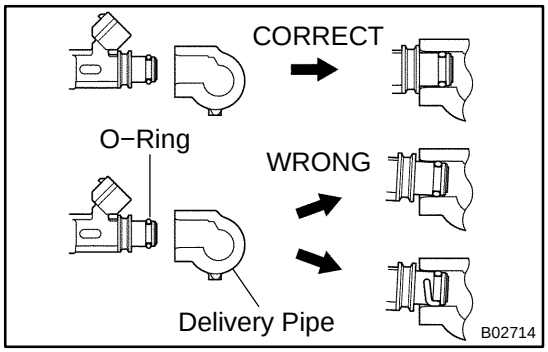

(c) Observe the following precautions when removing or installing the injectors.

(1) Never reuse the O−ring.

(2) When placing a new O−ring on the injector, take care not to damage it in any way.

(3) Coat a new O−ring with spindle oil or gasoline before installing. Never use engine, gear or brake oil.

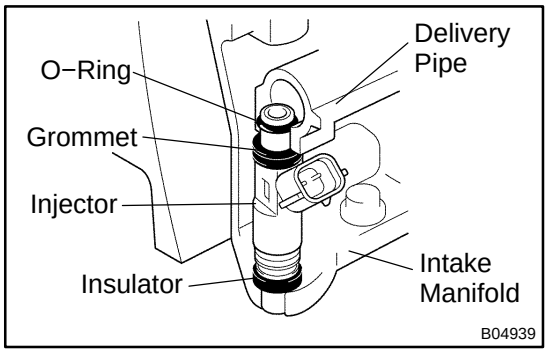

(d) Install the injector to the delivery pipe and intake manifold as shown in the illustration.

Before installing the injector, apply spindle oil or gasoline on the place where the delivery pipe or the intake manifold touches the O−ring of the injector.

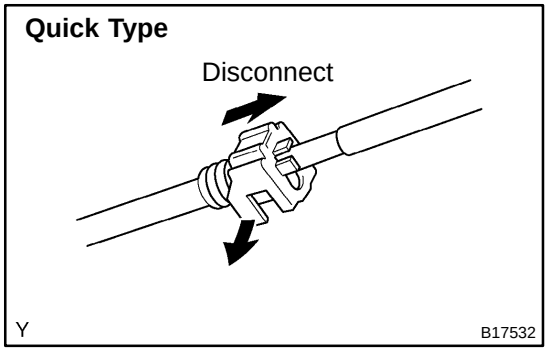

(e) Observe the following when disconnecting the fuel tube connector (quick type):

(1) Check if there is any dirt in the pipe and around the connector before disconnecting the fuel tube connector. If necessary, clean the dirt away.

(2) Disconnect the fuel pipe clamp from the connector.

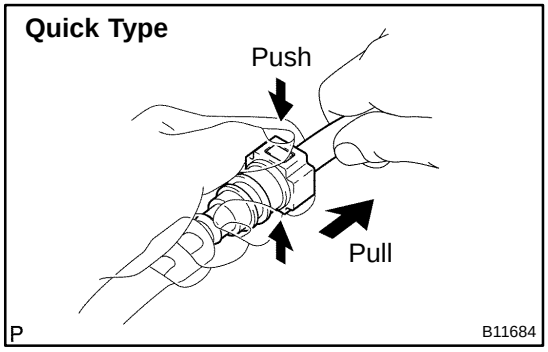

(3) Be sure to disconnect them by hand.

(4) When the connector and the pipe are stuck, push and pull the connector. Then disconnect and pull it out. Do not use any tools at this time.

(5) Check if there is any dirt or other foreign matter on the seal surface of the disconnected pipe. If necessary, clean the dirt away.

(6) Do not damage the disconnected pipe and connector and prevent intrusion of foreign objects by covering them with a plastic bag.

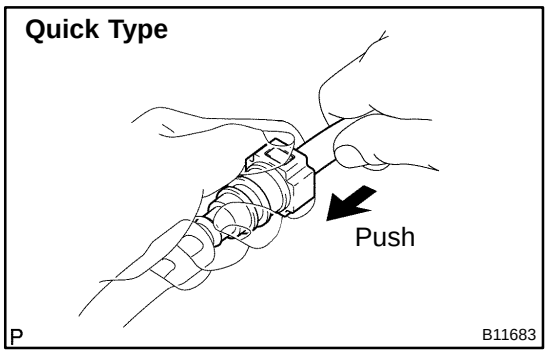

(f) Observe the following when connecting the fuel tube connector (quick type):
(1) Check if there is any damage or foreign objects in the connected part of the pipe.
(2) Match the axis of the connector with the axis of the pipe, and push into the connector until a ”click” sound is heard. If the connection is tight, apply a small amount of fresh engine oil on the tip of the pipe.

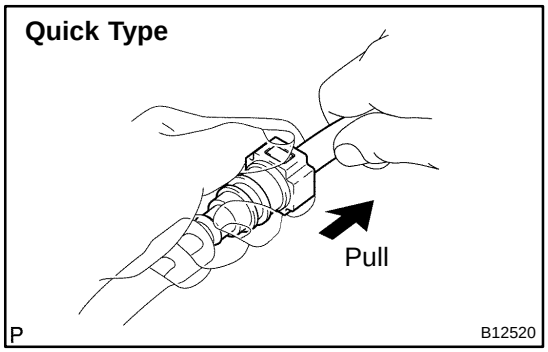

(3) After finishing the connection, pull the pipe and the connector to ensure it is secure.
(4) Check to make sure no fuel leak is present.

If the result is not specified, repair or replace.

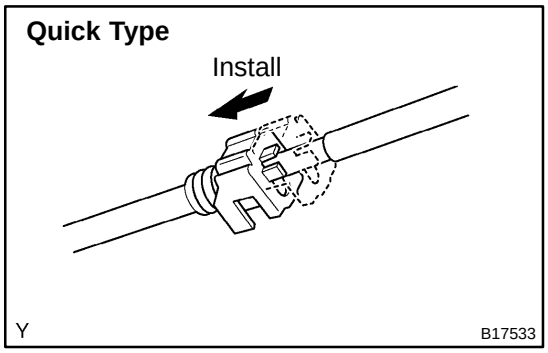

(5) Install the fuel pipe clamp to the connector.
(6) Check to make sure no fuel leak is present.

If the result is not specified, repair or replace.

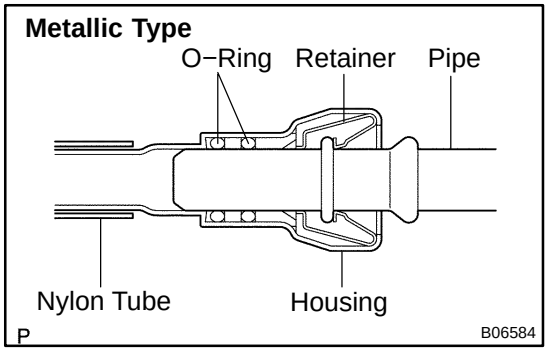

(g) Observe the following when disconnecting the fuel tube connector (metallic type):

HINT:

The structure of the metallic connector is shown on the left.

(1) Check if there is any dirt in the pipe and around the connector before disconnecting the fuel tube connector. If necessary, clean the dirt away.

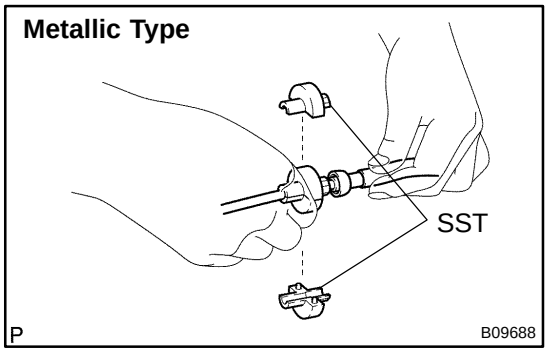

(2) Assemble SST to the connecting part, as shown in the illustration.

SST 09268−21010

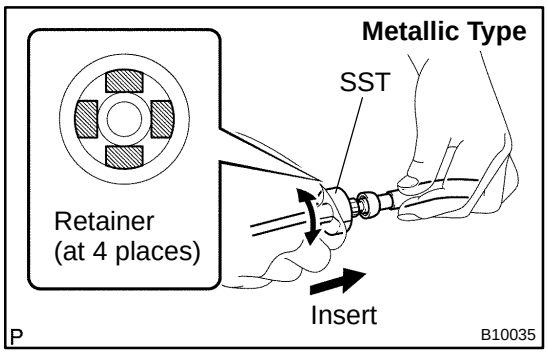

(3) Turn the SST, align the retainers inside the connector with the SST chamfered parts and insert the SST into the connector.

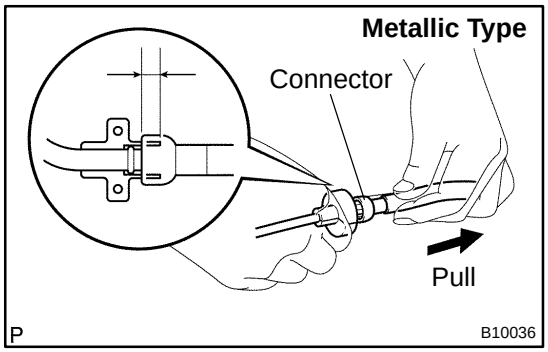

(4) While holding the SST, pull the connector towards the SST to put the retainers on the SST chamfered parts.
(5) Slide the SST and connector together towards the fuel tube assembly.

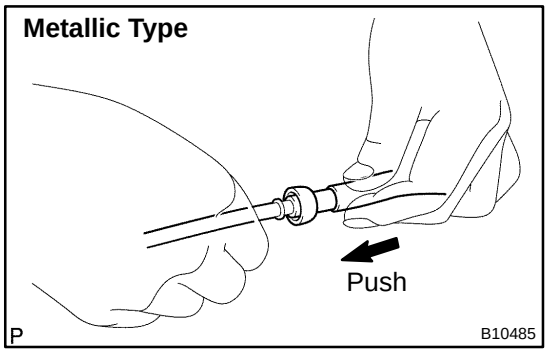

(h) Observe the following when connecting the fuel tube connector (metallic type):
(1) Check if there is any damage or foreign objects in the connected part of the pipe.
(2) Match the axis of the connector with the axis of the pipe, and push into the connector until a ”click” sound is heard. If the connection is tight, apply a small amount of fresh engine oil on the tip of the pipe.

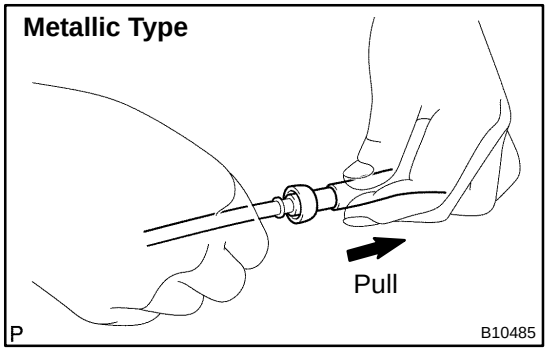

(3) After finishing the connection, pull the pipe and the connector to ensure it is secure.
(4) Check to make sure no fuel leak is present.

If the result is not specified, repair or replace.

(i) Observer the following when handling the nylon tube:
(1) Pay attention not to turn the connected part of the nylon tube and the quick connector with tube when connecting them.
(2) Pay attention not to kink the nylon tube.
(3) Do not remove the nylon tube.
(4) Do not close the piping with the nylon tube by bending it.

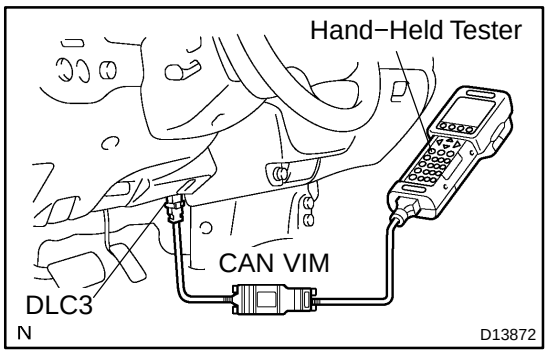

(j) Check that there is any fuel leak after maintenance anywhere on the fuel system.

(1) Connect a hand−held tester to the Controller Area Network Vehicle Interface Module (CAN VIM). Then connect the CAN VIM to the Date Link Connector 3 (DLC3).

(2) Turn the ignition switch ON and push the hand−held tester main switch ON.

NOTICE:

Do not start the engine.

(3) Enter the following menus: DIAGNOSIS / ENHANCED OBDII / ACTIVE TEST / FUEL PUMP / SPD.

(4) Please refer to the hand−held tester operator's manual for further details.

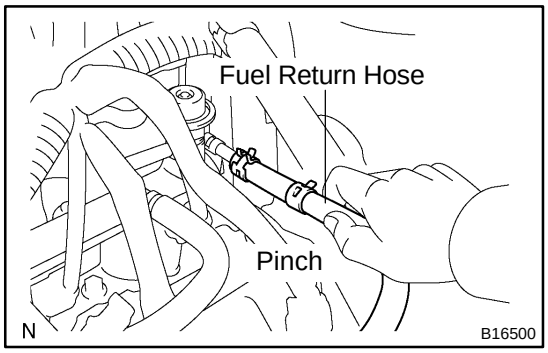

(5) Pinch the fuel return hose.

The pressure in the high pressure line will rise to approx. 392 kPa (4 kgf/cm^2, 57 psi). In this state, check to see that there are no leaks from any part of the fuel system.

NOTICE:

Always pinch the hose. Avoid bending as it may cause the hose to crack.

(6) Turn the ignition switch OFF.

(7) Disconnect the hand−held tester and CAN VIM from the DLC3.

SF1UP−02

COMPONENTS

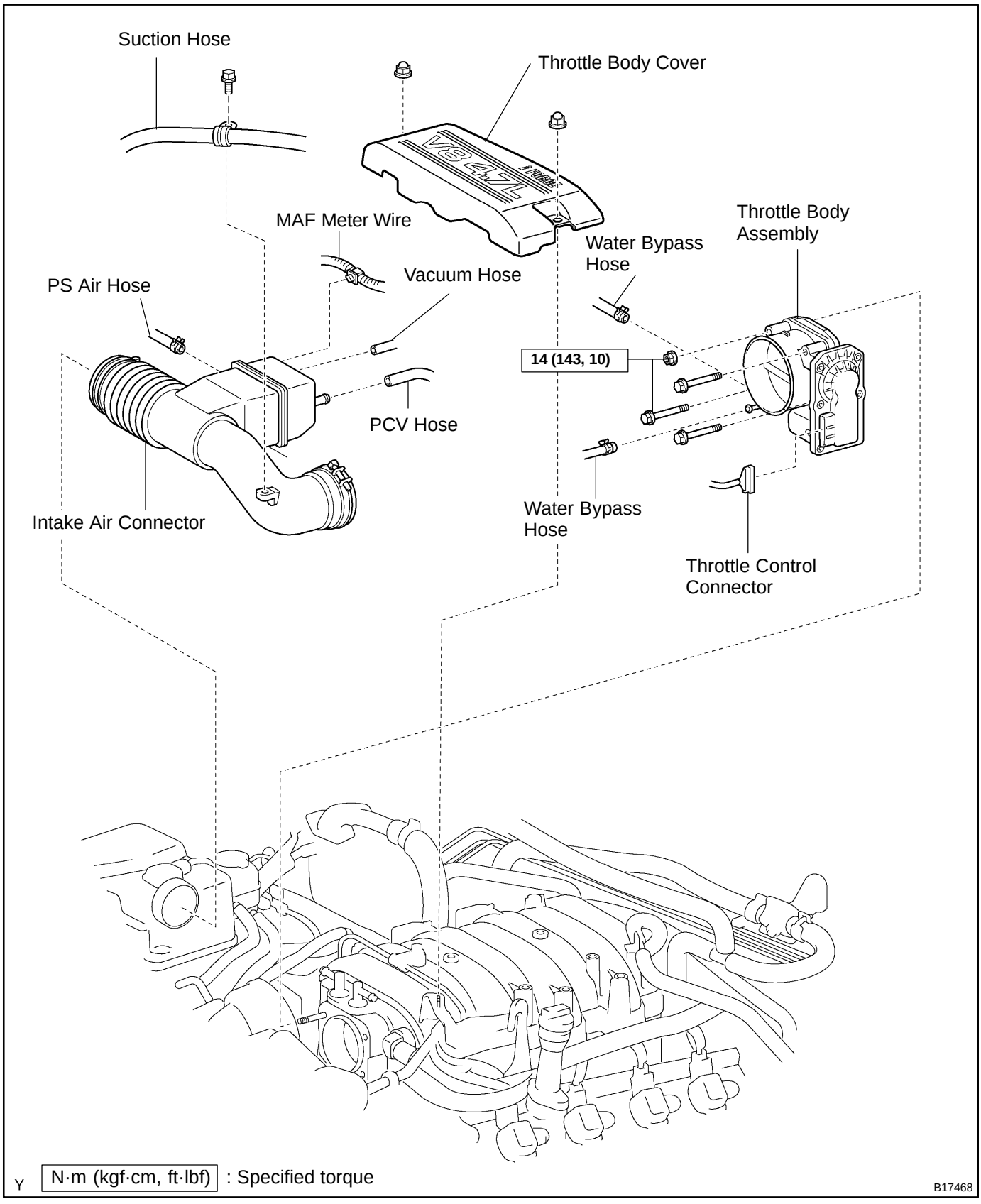

SF0P7−17

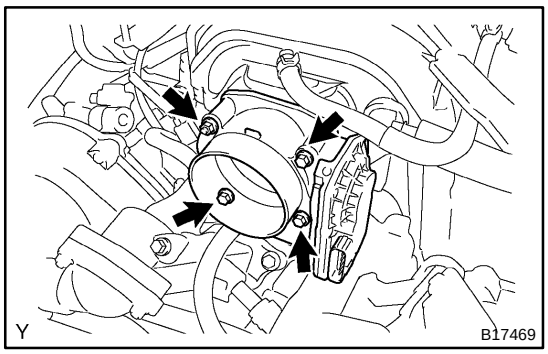

INSTALLATION

1. INSTALL THROTTLE BODY

(a) Install the throttle body with the nut and 3 bolts.
Torque: 14 N·m (143 kgf·cm, 10 ft·lbf)

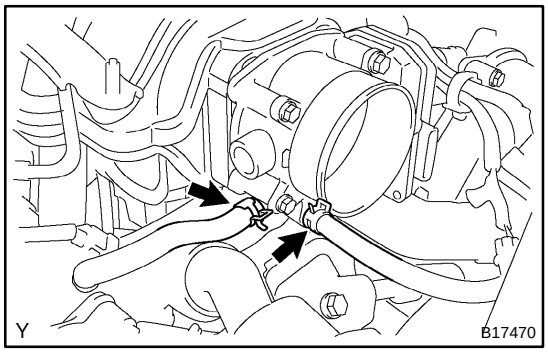

(b) Connect the 2 water bypass hoses to the throttle body.
(c) Connect the throttle control connector.

2. INSTALL INTAKE AIR CONNECTOR

3. FILL WITH ENGINE COOLANT (See page CO−2)

4. START ENGINE AND CHECK FOR ENGINE COOLANT LEAKS

5. INSTALL THROTTLE BODY COVER

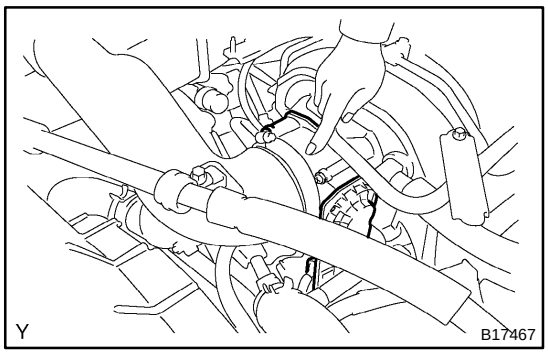

THROTTLE BODY

SF1XJ−02

ON−VEHICLE INSPECTION

1. REMOVE THROTTLE BODY COVER

2. INSPECT SYSTEM OPERATION

(a) Inspect the throttle control motor for operating sound.

(1) Turn the ignition switch ON.

(2) When depressing the accelerator pedal, check the running sound of the motor. Also, check that there is no friction sound.

If operation is not as specified, check the throttle control motor (see step 3), wiring and ECM.

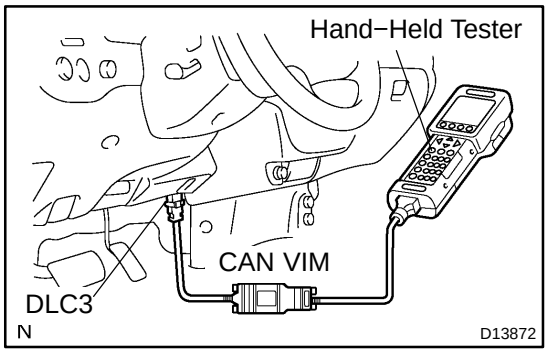

(b) Inspect the accelerator pedal position sensor.

(1) Connect a hand−held tester to the Controller Area Network Vehicle Interface Module (CAN VIM). Then connect the CAN VIM to the Date Link Connector 3 (DLC3).

(2) Check that the MIL does not light up.

(3) When turning the accelerator pedal position sensor lever to the full−open position, check that the throttle valve opening percentage (THROTTLE POS) of the CURRENT DATA showns the standard value.

Standard throttle valve opening percentage:
60% or more

If operation is not as specified, check that the accelerator pedal position sensor (see page DI−794), wiring and ECM.

If not using a hand−held tester, measure the voltage between terminals (VTA1−E2, VTA2−E2) of the ECM connector (See page DI−548).

(c) Inspect the idle speed.

(1) Start the engine and check that the MIL does not light up.

(2) Allow the engine to warm up to normal operating temperature.

(3) Turn the A/C compressor ON to OFF, and check the idle speed.

Idle speed (Transmission in neutral): 700 ± 50 rpm

NOTICE:

Perform inspection without an electrical load.

(d) After checking the above (a) to (c), perform the driving test and check that there is no sense of incongruity.

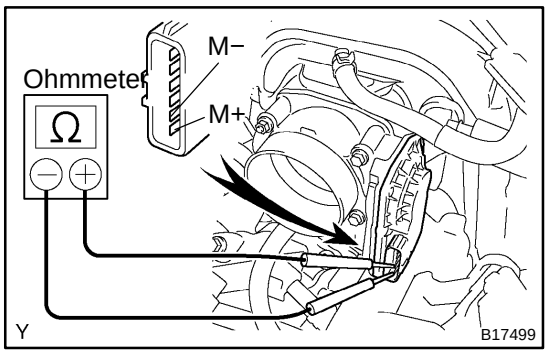

3. INSPECT THROTTLE CONTROL MOTOR

(a) Disconnect the throttle control motor connector.

(b) Using an ohmmeter, measure the motor resistance between terminals M+ and M−.

Motor resistance: 0.3 to 100 Ω at 20°C (68°F)

If the resistance is not as specified, replace the throttle body assembly (see page SF−44).

(c) Reconnect the throttle control motor connector.

4. INSPECT THROTTLE POSITION SENSOR

(See page DI−548)

If necessary, replace the throttle body assembly (see page SF−44).

5. REINSTALL THROTTLE BODY COVER

SF0P5−16

REMOVAL

1. REMOVE THROTTLE BODY COVER

2. DRAIN ENGINE COOLANT

3. REMOVE INTAKE AIR CONNECTOR

4. REMOVE THROTTLE BODY

(a) Disconnect the throttle control connector.

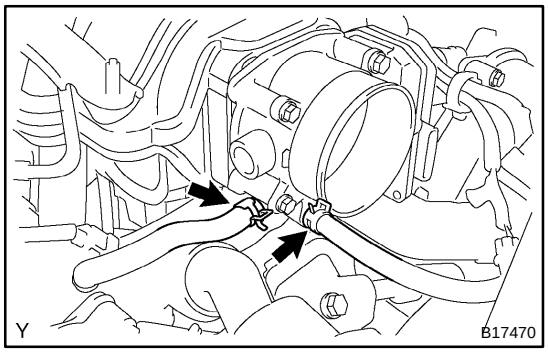

(b) Disconnect the 2 water bypass hoses from the throttle body.

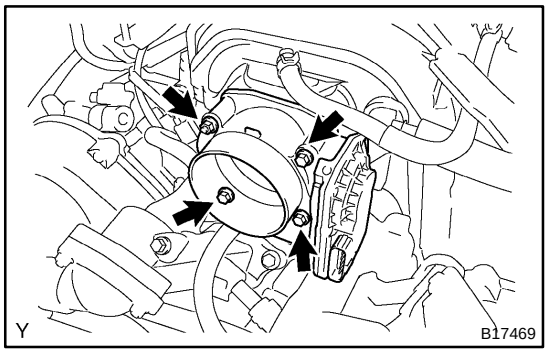

(c) Remove the nut and 3 bolts, and remove the throttle body from the intake manifold.

VSV FOR EVAPORATIVE EMISSION (EVAP)

COMPONENTS

SF0Y7−10

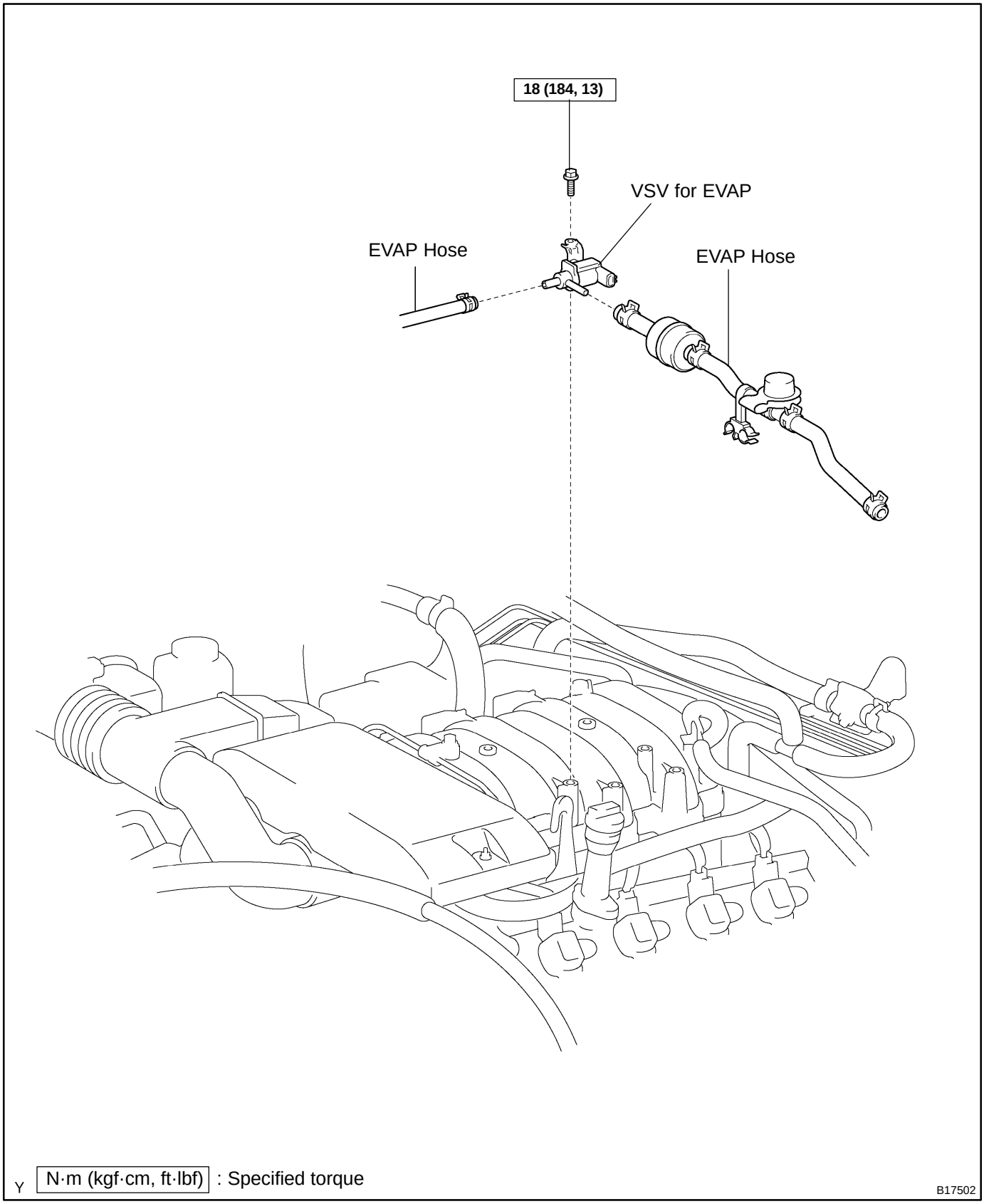

Y N·m (kgf·cm, ft·lbf) : Specified torque

B17502

SF0PJ−10

INSPECTION

1. REMOVE VSV

2. INSPECT VSV

(a) Inspect the VSV for open circuit.

Using an ohmmeter, check that there is continuity between the terminals.

Resistance: 30 to 34 Ω at 20˚C (68˚F)

If there is no continuity, replace the VSV.

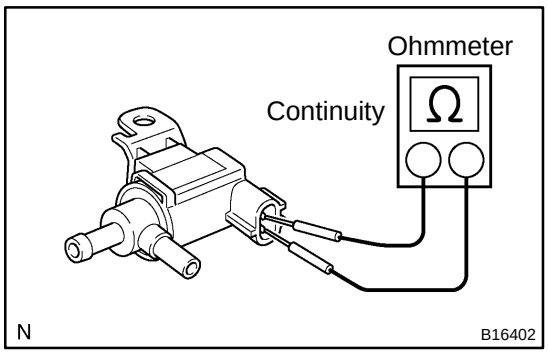

(b) Inspect the VSV for ground.

Using an ohmmeter, check that there is no continuity between each terminal and the body.

If there is continuity, replace the VSV.

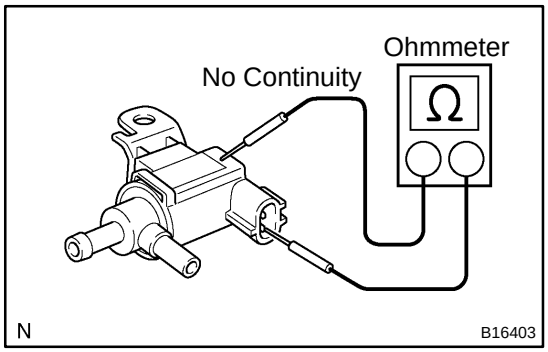

(c) Inspect the VSV operation.

(1) Check that air dose not flow from port.

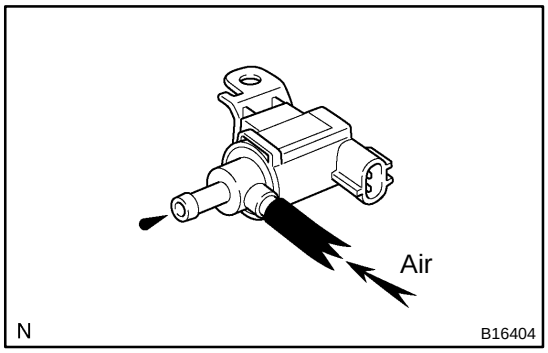

(2) Apply battery positive voltage across the terminals.

(3) Check that air flows from port.

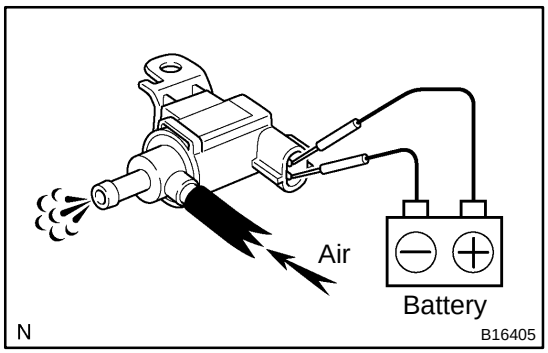

If operation is not as specified, replace the VSV.

3. REINSTALL VSV

VVT SENSOR

COMPONENTS

SF1XX−01

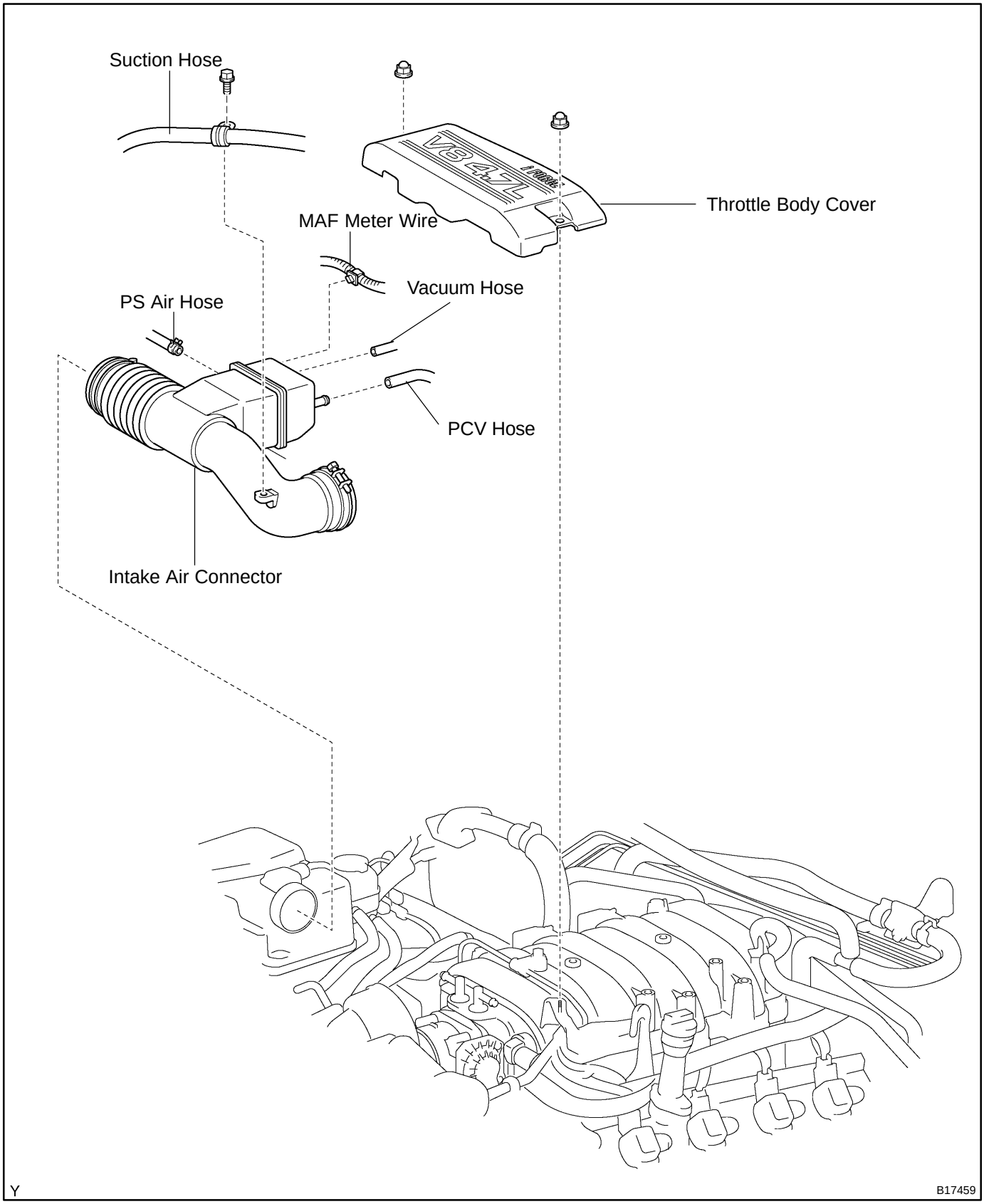

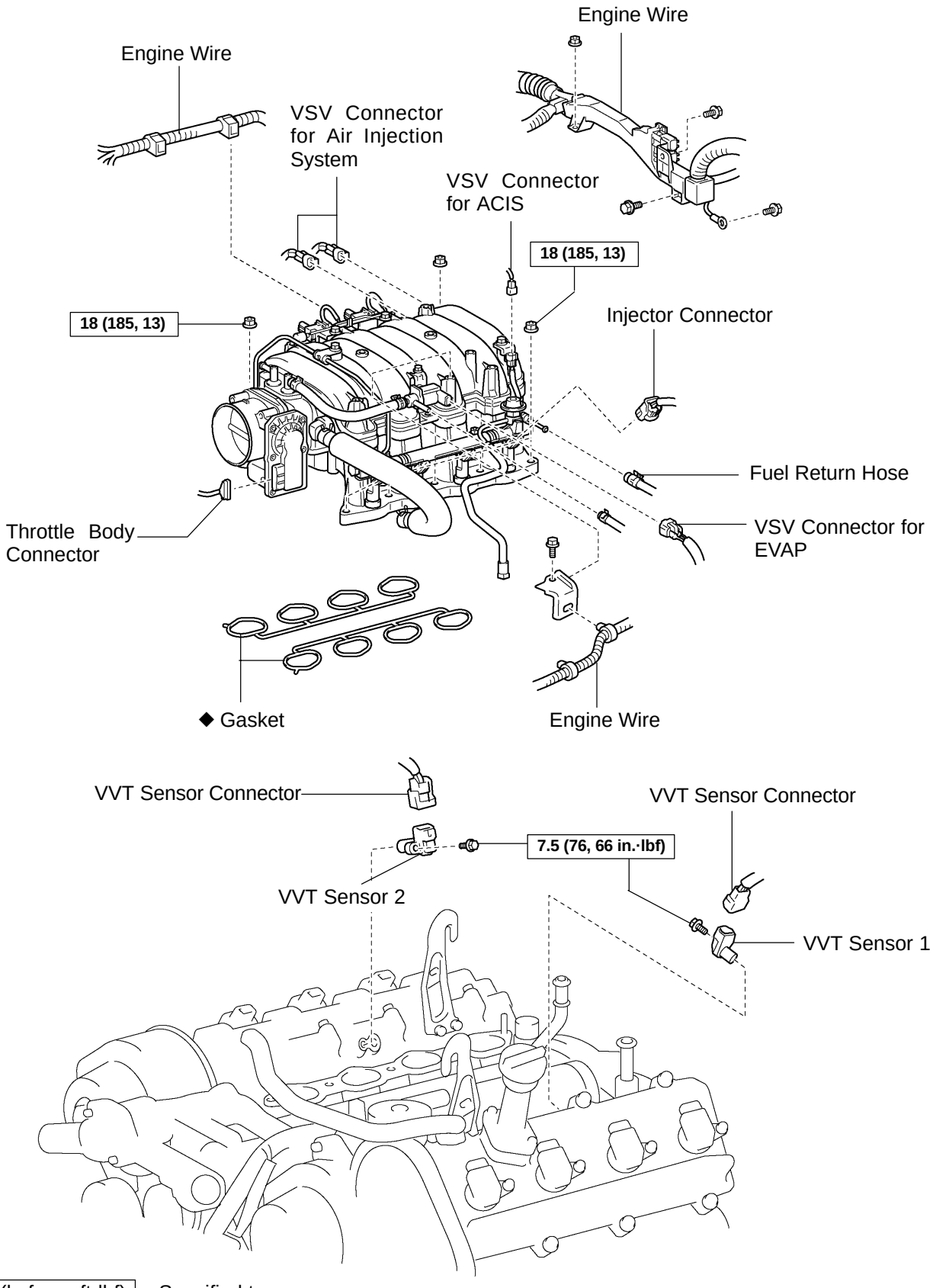

N·m (kgf·cm, ft·lbf) : Specified torque
◆ Non−reusable part

Y

B17493

SF0PW−04

INSPECTION

NOTICE:

"Cold" and "Hot in these sentences express the temperature of the sensors themselves. "Cold" is from − 10˚C (14˚F) to 50˚C (122˚F) and "Hot" is from 50 ˚C (122˚F) to 100˚C (212˚F).

1. REMOVE THROTTLE BODY COVER

2. REMOVE INTAKE MANIFOLD ASSEMBLY
(See page EM−36)

3. INSPECT VVT SENSOR RESISTANCE

(a) Disconnect the VVT sensor connector.

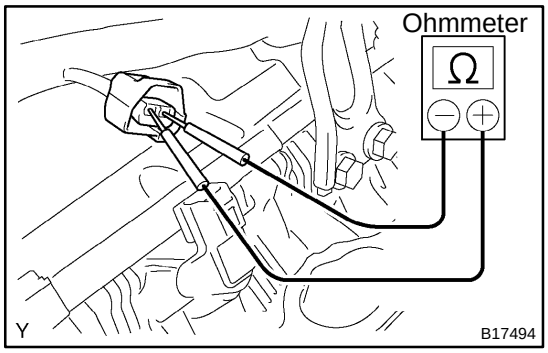

(b) Using an ohmmeter, measure the resistance between the terminals.

Resistance:

Cold	835 to 1,400 Ω
Hot	1,060 to 1,645 Ω

If the resistance is not as specified, replace the sensor.

(c) Reconnect the VVT sensor connector.

(d) Connect the VVT sensor connector.

4. REINSTALL INTAKE MANIFOLD ASSEMBLY
(See page EM−60)

5. REINSTALL THROTTLE BODY COVER

SF1XY−02

REPLACEMENT

1. REMOVE THROTTLE BODY COVER

2. REMOVE INTAKE MANIFOLD ASSEMBLY
(See page EM−36)

3. REMOVE VVT SENSOR

(a) Disconnect the VVT sensor connector.

(b) Remove the bolt and VVT sensor.

4. INSTALL VVT SENSOR

(a) Attach a new VVT sensor to the cylinder head.

(b) Install the VVT sensor with the bolt.
Torque: 6.5 N·m (65 kgf·cm, 58 in.·lbf)

5. REINSTALL INTAKE MANIFOLD ASSEMBLY
(See page EM−60)

6. REINSTALL THROTTLE BODY COVER

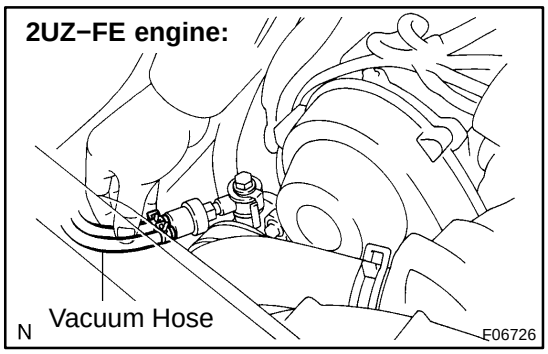

AIR CONTROL VALVE

SR01X−04

INSPECTION

1. TURN AIR CONDITIONING SWITCH OFF

2. CHECK IDLE−UP

(a) Start the engine and run it at idle.

(b) Fully turn the steering wheel.

(c) Check that the engine rotations decrease when the vacuum hose of the air control valve is pinched.

(d) Check that the engine rotations increase when the hose is released.

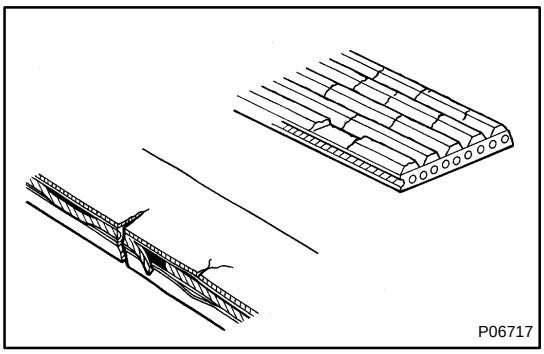

DRIVE BELT

SR1KF−01

INSPECTION

INSPECT DRIVE BELT

(a) Visually check the belt for excessive wear, frayed cords, etc.

If any defect is found, replace the drive belt.

HINT:

Cracks on the rib side of a belt are considered acceptable. Replace the belt if there are any missing ribs.

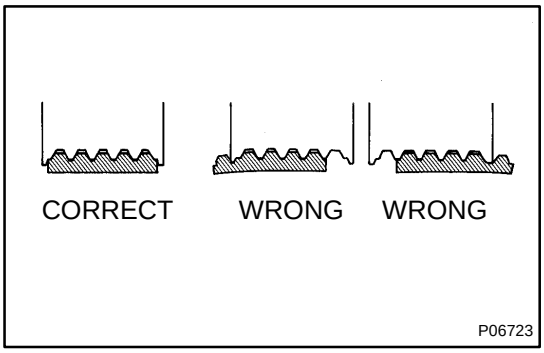

HINT:

- After installing a belt, check that it fits properly in the ribbed grooves.
- Check with your hand to confirm that the belt has not slipped out of the groove on the bottom of the pulley.

POWER STEERING FLUID BLEEDING

SR01V−11

1. CHECK FLUID LEVEL (See page SR−5)

2. JACK UP FRONT OF VEHICLE AND SUPPORT IT WITH STANDS

3. TURN STEERING WHEEL

With the engine stopped, turn the wheel slowly from lock to lock several times.

4. LOWER VEHICLE

5. START ENGINE

Run the engine at idle for a few minutes.

6. TURN STEERING WHEEL

(a) With the engine idling, turn the wheel left or right to the full lock position and keep it there for 2 to 3 seconds, then turn the wheel to the opposite full lock position and keep it there for 2 to 3 seconds.

(b) Repeat (a) several times.

7. STOP ENGINE

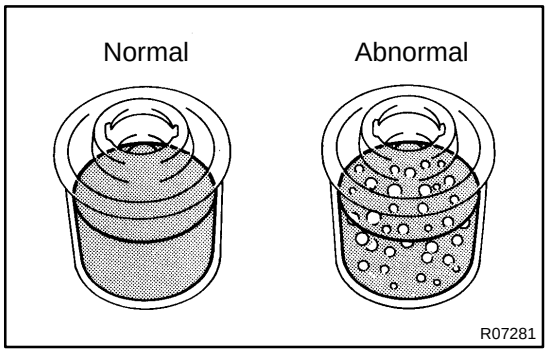

8. CHECK FOR FOAMING OR EMULSIFICATION

If the system has to be bled twice specifically because of foaming or emulsification, check for fluid leaks in the system.

9. CHECK FLUID LEVEL (See page SR−5)

SR01W−12

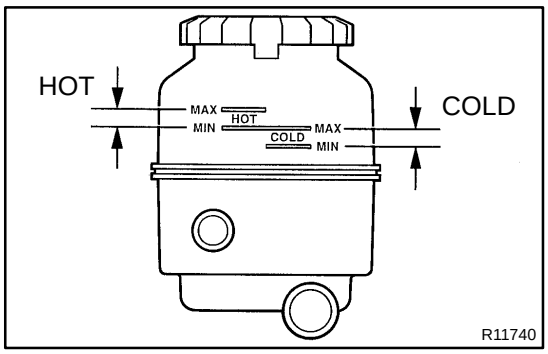

INSPECTION

1. CHECK FLUID LEVEL

(a) Keep the vehicle level.

(b) With the engine stopped, check the fluid level in the reservoir.

If necessary, add fluid.

Fluid: ATF DEXRON® II or III

HINT:

When the fluid is hot, check that the fluid level is within the HOT range.

If the fluid is cold, check that it is within the COLD range.

(c) Start the engine and run at idle.

(d) Turn the steering wheel from lock to lock several times to raise fluid temperature.

Fluid temperature: 80˚C (176˚F)

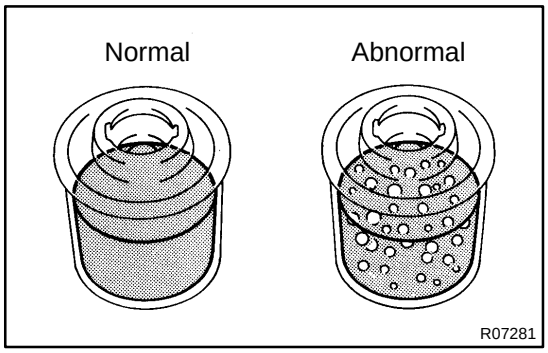

(e) Check for foaming or emulsification.

If foaming or emulsification is identified, bleed air from the power steering system (See page SR−4).

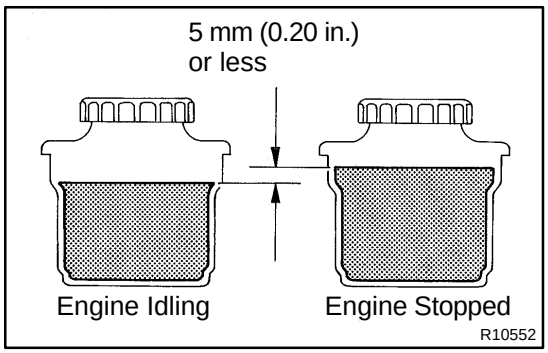

(f) With the engine idling, measure the fluid level in the reservoir.

(g) Stop the engine.

(h) Wait a few minutes and remeasure the fluid level in the reservoir.

Maximum fluid level rise: 5 mm (0.20 in.)

If the fluid level rise exceeds the maximum, bleed air from the power steering system (See page SR−4).

(i) Check the fluid level.

2. CHECK STEERING FLUID PRESSURE

(a) 2UZ−FE engine:
Remove the air cleaner assembly with the air cleaner hose (See page SR−61).

(b) Disconnect the pressure feed tube from the PS vane pump.
(1GR−FE engine: See page SR−47.)
(2UZ−FE engine: See page SR−61.)

(c) Connect SST, as shown in the illustration below.
SST 09640−10010 (09641−01010, 09641−01030, 09641−01060)

NOTICE:
Check that the valve of the SST is in the open position.

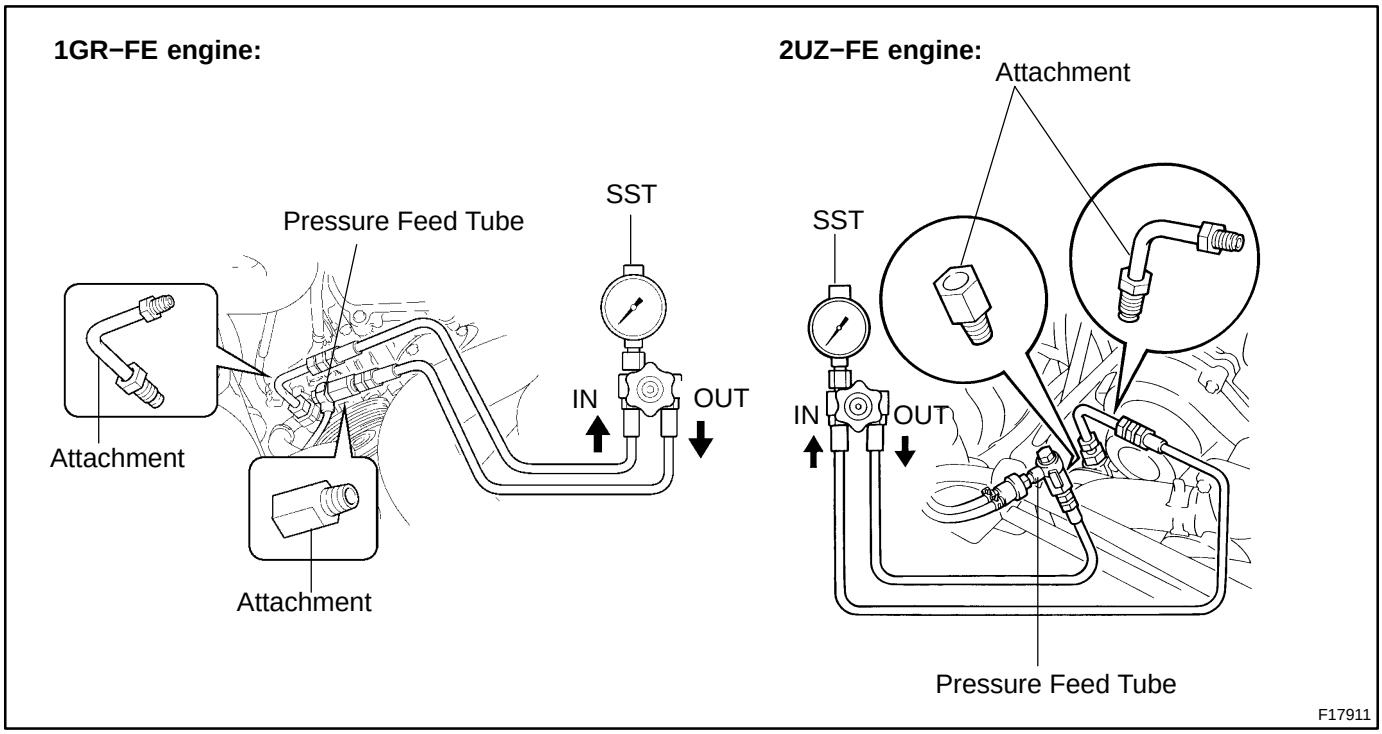

(d) Bleed air from the power steering system (See page SR−4).

(e) Start the engine and run at idle.

(f) Turn the steering wheel from lock to lock several times to raise fluid temperature.
Fluid temperature: 80 ˚C (176 ˚F)

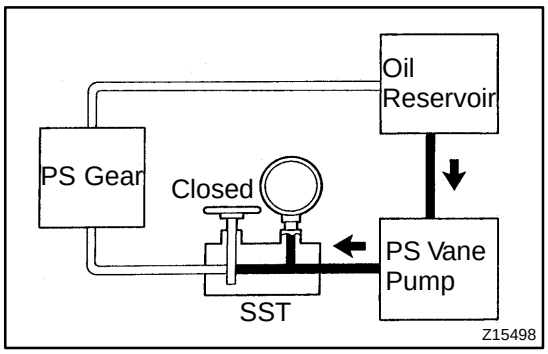

(g) With the engine idling, close the valve of the SST and observe the reading on the SST.
Minimum fluid pressure:
8,336 kPa (85 kgf/cm^2, 1,209 psi)

NOTICE:
- **Do not keep the valve closed for more than 10 seconds.**
- **Do not allow the fluid temperature to become too high.**

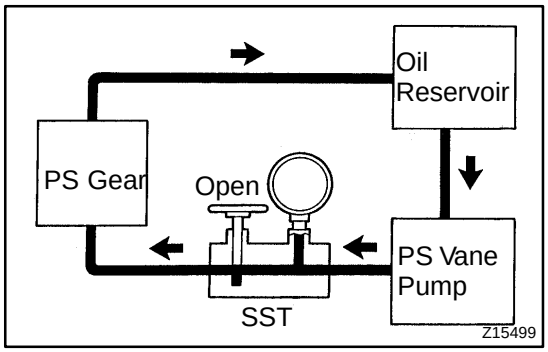

(h) With the engine idling, fully open the valve.
(i) Measure the fluid pressure at engine speeds of 1,000 rpm and 3,000 rpm.
Difference in fluid pressure:
490 kPa (5 kgf/cm^2, 71 psi) or less

NOTICE:
Do not turn the steering wheel.

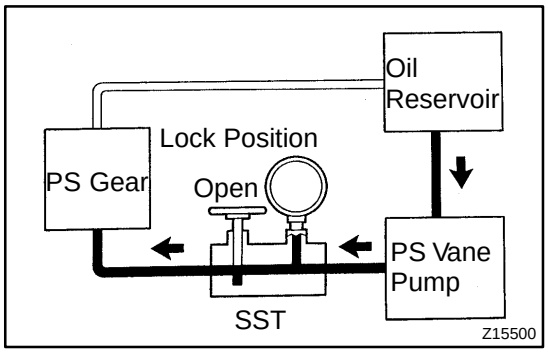

(j) With the engine idling and the valve fully opened, turn the steering wheel left or right to the full lock position.
Minimum fluid pressure:
8,336 kPa (85 kgf/cm^2, 1,209 psi)

NOTICE:
- **Do not keep the steering wheel in the full lock position for more than 10 seconds.**
- **Do not allow the fluid temperature to become too high.**

(k) Disconnect the SST.
SST 09640−10010 (09641−01010, 09641−01030, 09641−01060)

(l) Connect the pressure feed tube.
(1GR−FE engine: See page SR−57.)
(2UZ−FE engine: See page SR−69.)

(m) 2UZ−FE engine:
Install the air cleaner assembly with the air cleaner hose (See page SR−69).

(n) Bleed air from the power steering system (See page SR−4).

POWER STEERING GEAR

SR02N−09

COMPONENTS

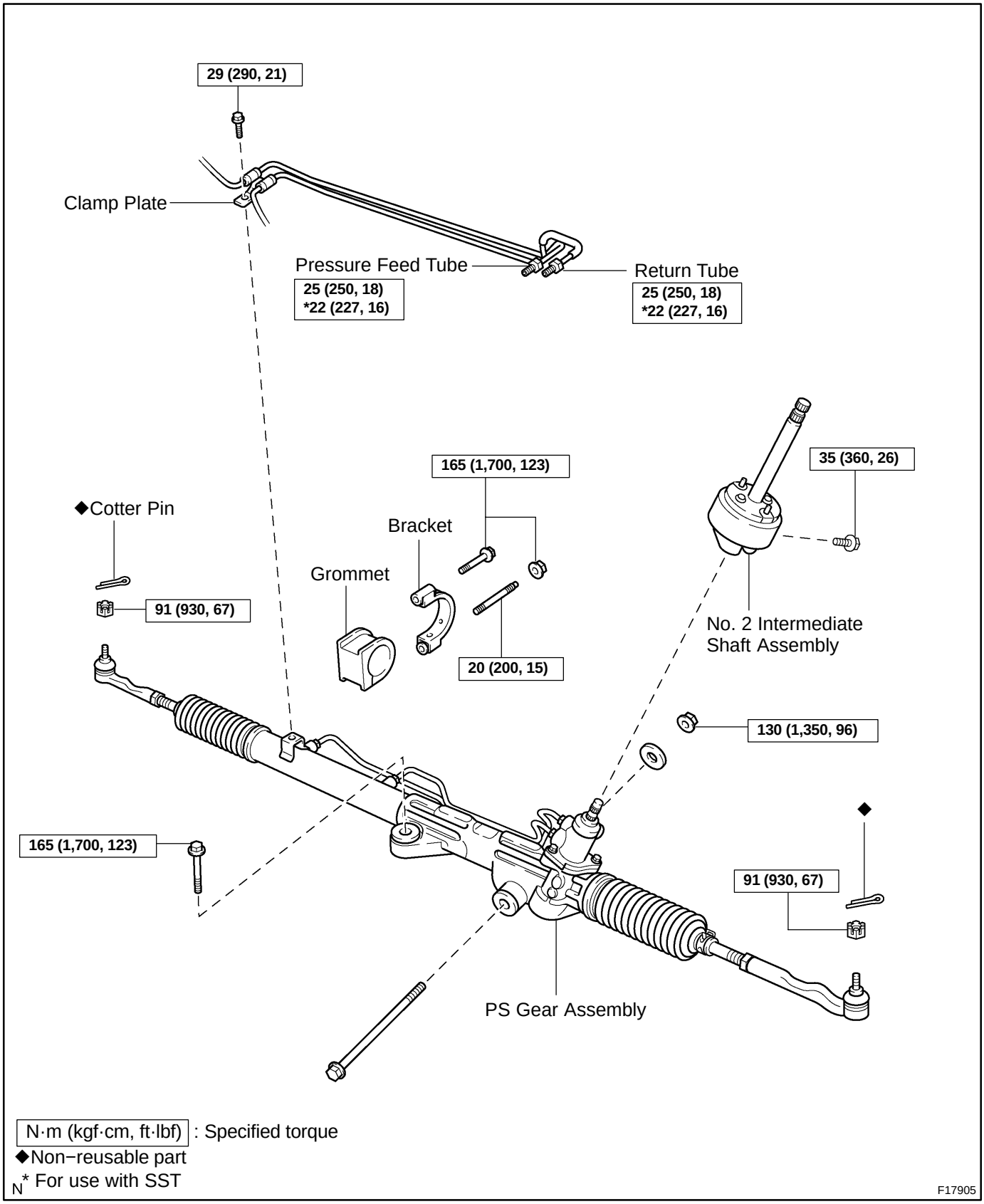

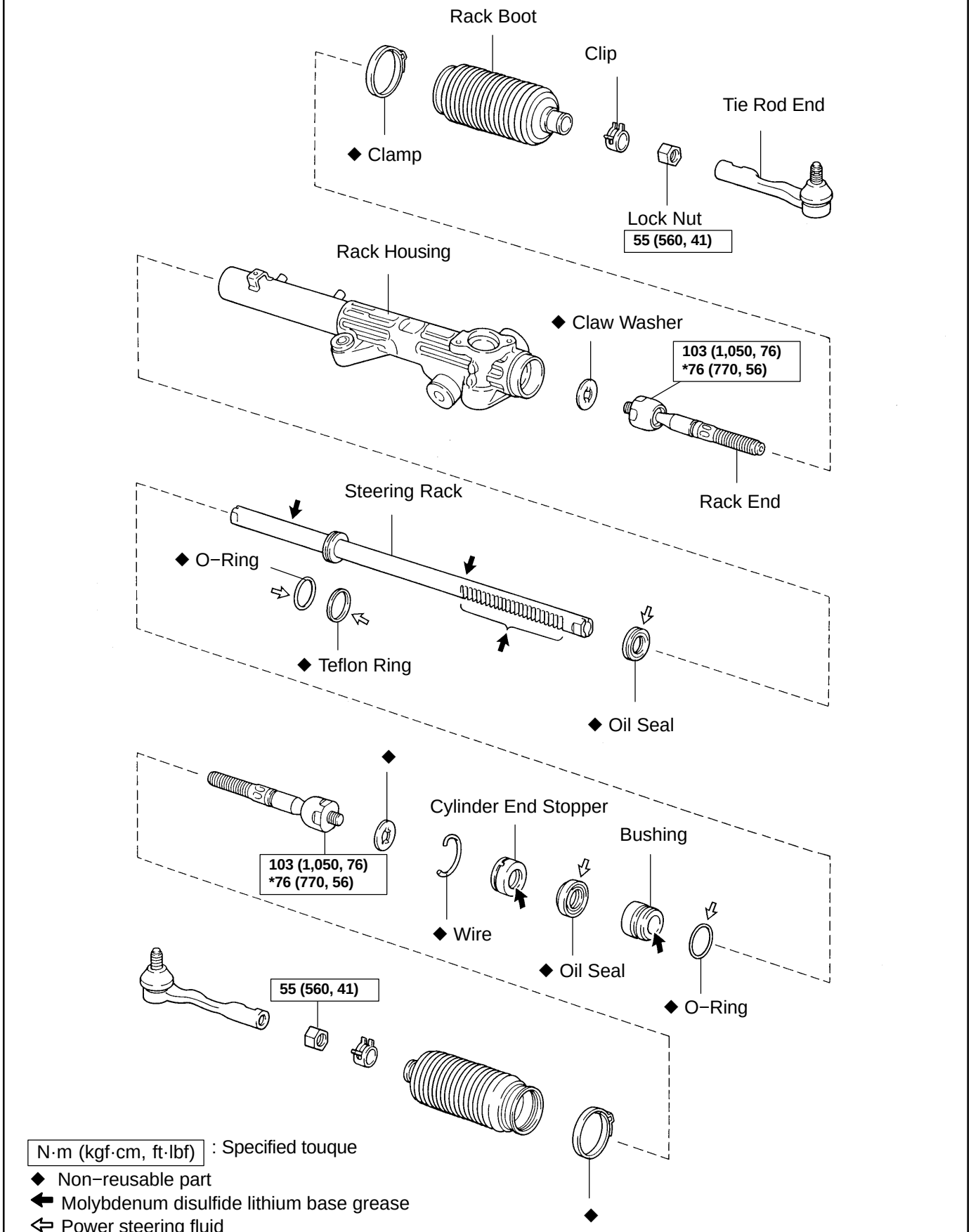
Rack Boot
Clip
Tie Rod End
◆ Clamp
Lock Nut
55 (560, 41)
Rack Housing
◆ Claw Washer
103 (1,050, 76)
*76 (770, 56)
Rack End
Steering Rack
◆ O−Ring
◆ Teflon Ring
◆ Oil Seal
◆
103 (1,050, 76)
*76 (770, 56)
Cylinder End Stopper
Bushing
◆ Wire
◆ Oil Seal
◆ O−Ring
55 (560, 41)
◆
N·m (kgf·cm, ft·lbf) : Specified touque
◆ Non−reusable part
Molybdenum disulfide lithium base grease
Power steering fluid
N * For use with SST
F06761

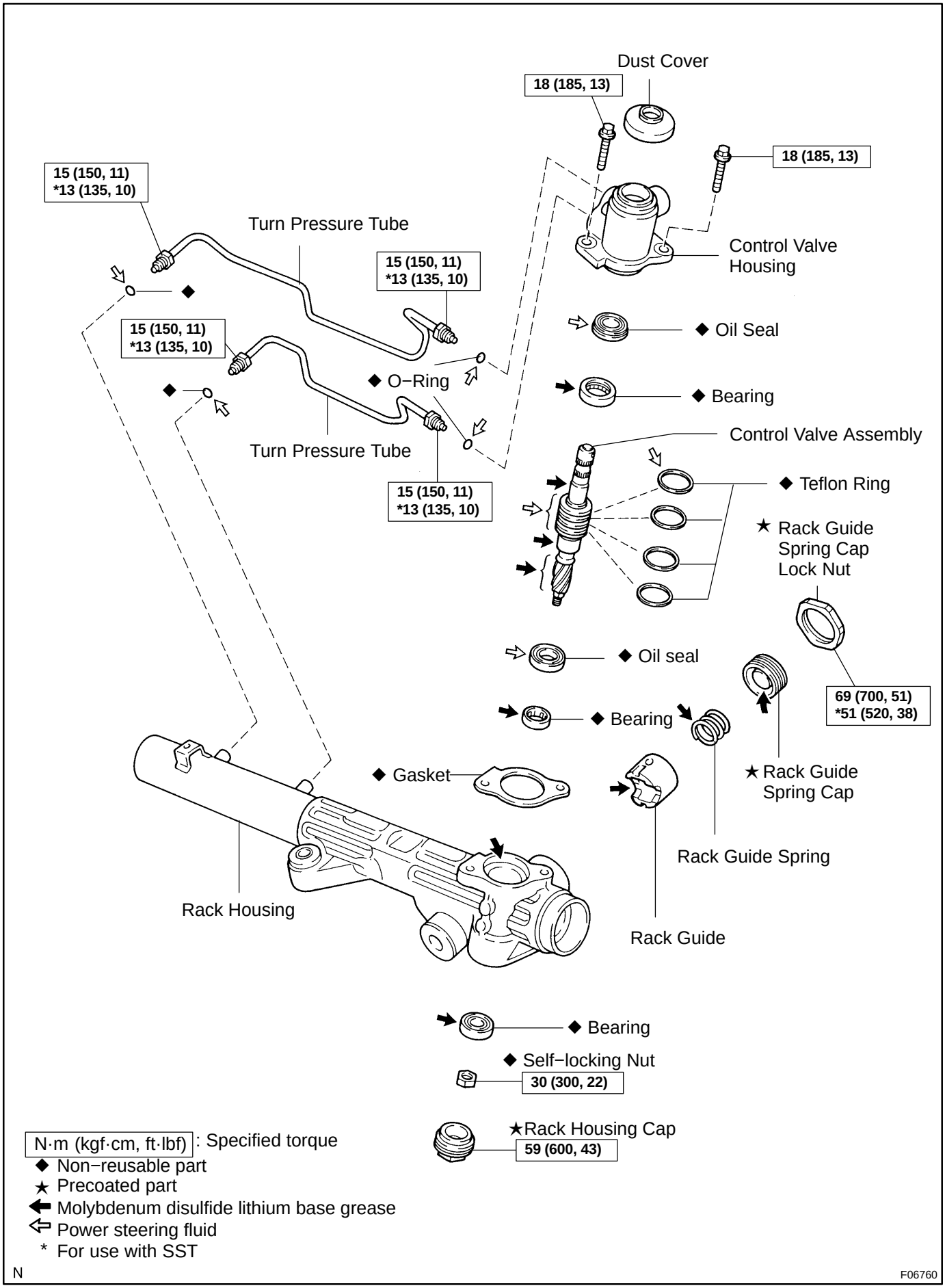
Dust Cover
18 (185, 13)
18 (185, 13)
15 (150, 11)
*13 (135, 10)
Turn Pressure Tube
Control Valve
Housing
15 (150, 11)
*13 (135, 10)
◆ Oil Seal
15 (150, 11)
*13 (135, 10)
◆ O−Ring
◆ Bearing
Control Valve Assembly
Turn Pressure Tube
15 (150, 11)
*13 (135, 10)
◆ Teflon Ring
★ Rack Guide
Spring Cap
Lock Nut
◆ Oil seal
69 (700, 51)
*51 (520, 38)
◆ Bearing
★ Rack Guide
Spring Cap
◆ Gasket
Rack Guide Spring
Rack Housing
Rack Guide
◆ Bearing
◆ Self−locking Nut
30 (300, 22)
★Rack Housing Cap
59 (600, 43)
N·m (kgf·cm, ft·lbf) : Specified torque
◆ Non−reusable part
★ Precoated part
Molybdenum disulfide lithium base grease
Power steering fluid
* For use with SST
N
F06760

SR0V9−06

DISASSEMBLY

NOTICE:

When using a vise, do not overtighten it.

1. REMOVE 2 TURN PRESSURE TUBES

(a) Using SST, remove the 2 turn pressure tubes.
SST 09023−38401

(b) Remove the 4 O−rings from the tubes.

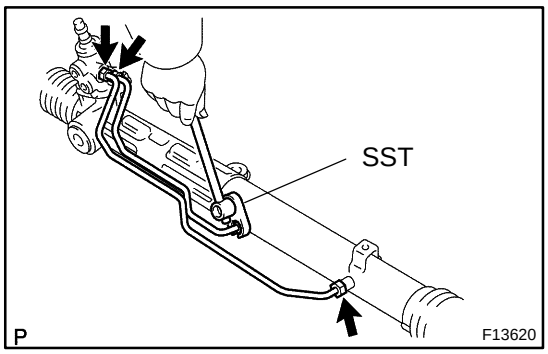

2. SECURE PS GEAR ASSEMBLY IN VISE

Using SST, 2 bolts and nuts, secure the gear assembly in a vise, as shown in the illustration.

SST 09612−00012

Reference:
Bolt: 90105−10346
Nut: 90170−10198

HINT:

Use 2 of the same type of SST.

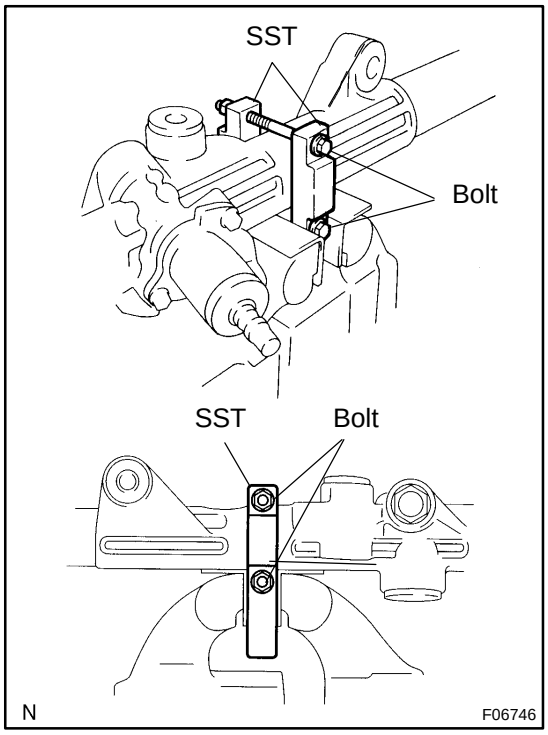

3. REMOVE RH AND LH TIE ROD ENDS AND LOCK NUTS

(a) Put matchmarks on the tie rod end, lock nut and rack end.

(b) Loosen the lock nut, remove the tie rod end and lock nut.

(c) Perform the same procedure on the other side.

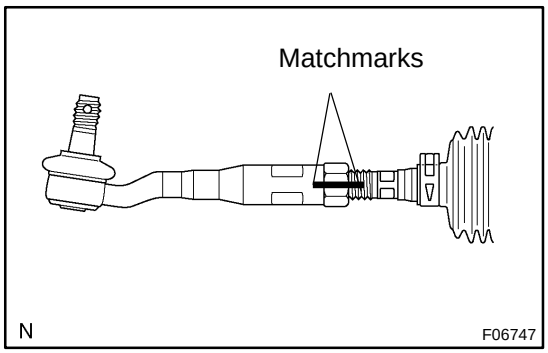

4. REMOVE RH AND LH CLIPS, RACK BOOTS AND CLAMPS

(a) Using a screwdriver, loosen the 2 clamps.

(b) Remove the 2 clips and boots.

HINT:

Mark the RH and LH boots.

NOTICE:

Be careful not to damage the boot.

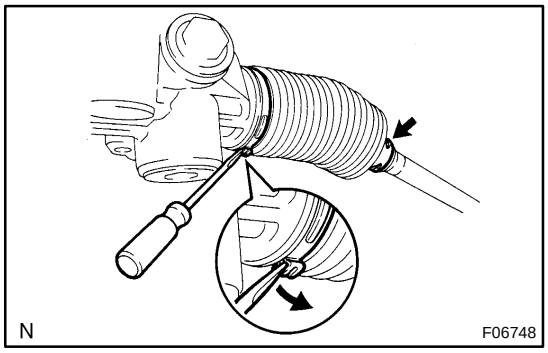

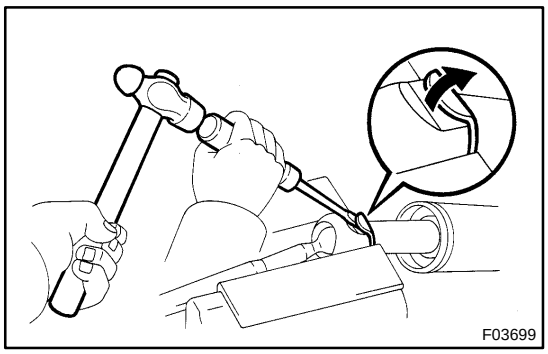

5. REMOVE RH AND LH RACK ENDS AND CLAW WASHERS

(a) Using a screwdriver and hammer, unstake the washer.

NOTICE:

Avoid any impact on the steering rack.

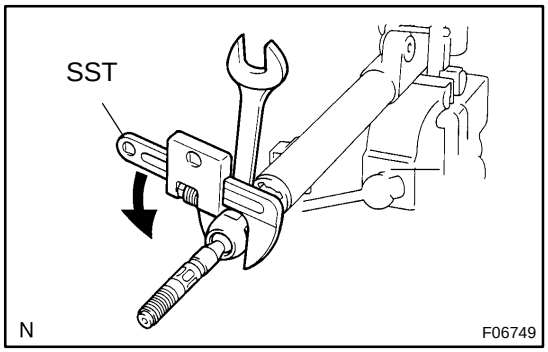

(b) Using a spanner to hold the steering rack steadily, and using SST, remove the rack end.

SST 09922−10010

HINT:

Mark the RH and LH rack ends.

NOTICE:

Use SST 09922−10010 in the direction shown in the illustration.

(c) Remove the washer from the rack end.

(d) Perform the same procedure on the other side.

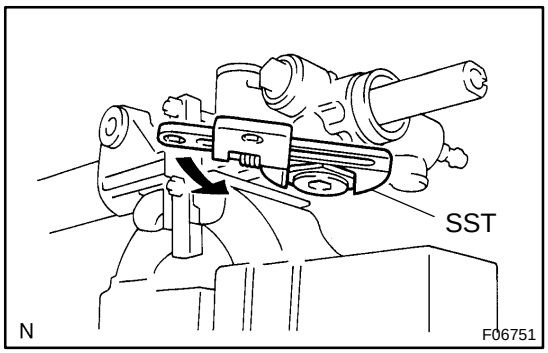

6. REMOVE RACK GUIDE SPRING CAP LOCK NUT

Using SST, remove the lock nut.

SST 09922−10010

NOTICE:

Use SST 09922−10010 in the direction shown in the illustration.

7. REMOVE RACK GUIDE SPRING CAP, RACK GUIDE SPRING AND RACK GUIDE

(a) Using a hexagon wrench, remove the rack guide spring cap.

(b) Remove the rack guide spring and rack guide.

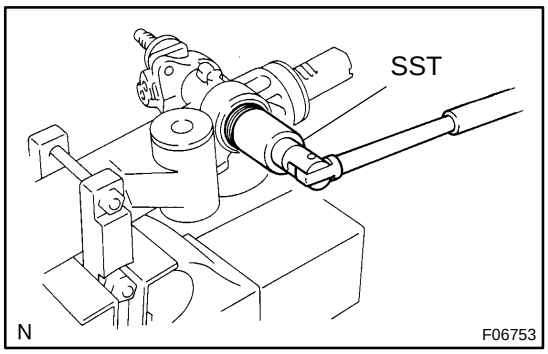

8. REMOVE RACK HOUSING CAP

Using SST, remove the rack housing cap.

SST 09816−30010

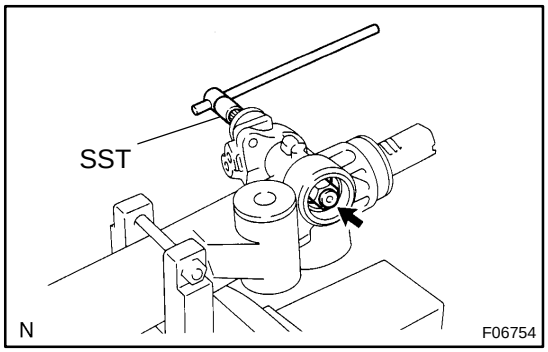

9. REMOVE SELF−SOCKING NUT

Using SST to stop the control valve shaft rotating, remove the nut.

SST 09616−00011

10. REMOVE DUST COVER

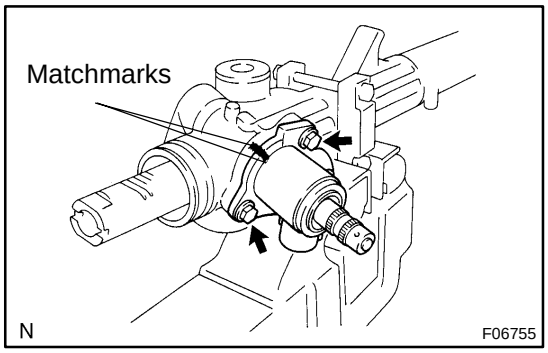

11. REMOVE CONTROL VALVE HOUSING WITH CONTROL VALVE ASSEMBLY

(a) Put matchmarks on the control valve housing and rack housing.

(b) Remove the 2 bolts and control valve housing with control valve assembly.

(c) Remove the gasket from the rack housing.

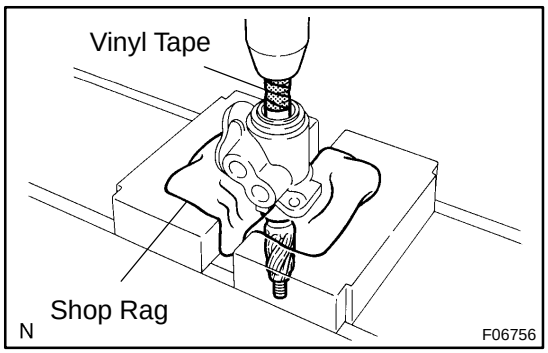

12. REMOVE CONTROL VALVE ASSEMBLY

(a) To prevent oil seal lip damage, wind vinyl tape on the serrated part of the valve shaft.

(b) Press out the valve assembly with the oil seal.

NOTICE:

- **Place a shop rag between the valve housing and the blocks.**
- **Be careful not to drop the valve assembly.**
- **Be careful not to damage the oil seal lip.**

13. REMOVE OIL SEAL

Remove the oil seal from the control valve assembly.

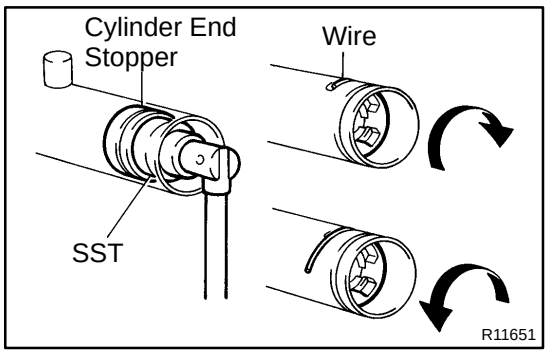

14. REMOVE CYLINDER END STOPPER

(a) Using SST, turn the stopper clockwise until the wire end is visible through the service hole.
SST 09631−16010

(b) Using SST, turn the stopper counterclockwise, and remove the wire.
SST 09631−16010

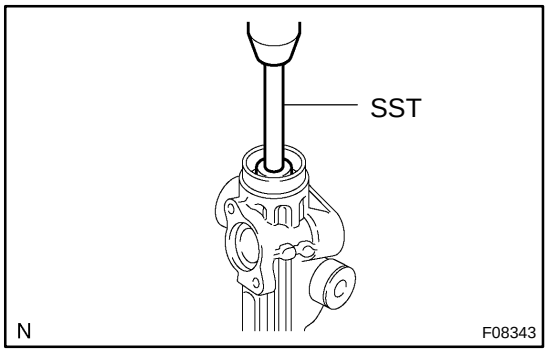

15. REMOVE STEERING RACK AND BUSHING

(a) Using SST, press out the steering rack with the bushing

NOTICE:

Take care not to drop the rack.

SST 09950−70010 (09951−07200)

(b) Remove the bushing from the rack.

(c) Remove the O−ring from the bushing.

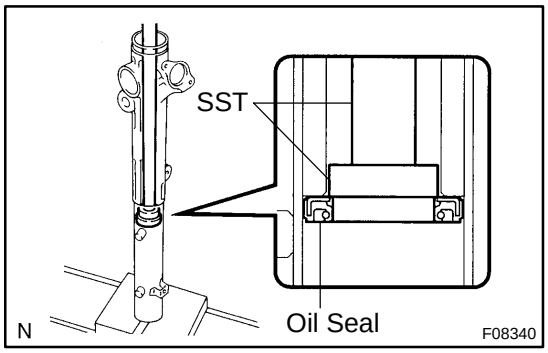

16. REMOVE OIL SEAL

Using SST, press out the oil seal.

SST 09950−60010 (09951−00360),
09950−70010 (09951−07360)

SR0VA−01

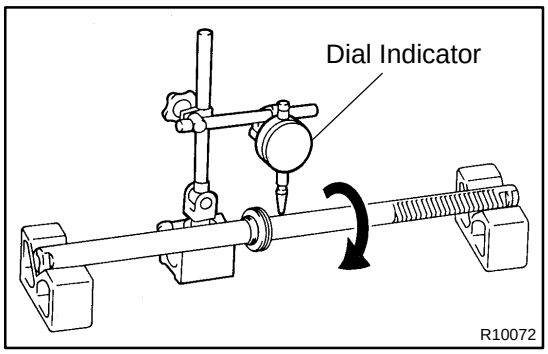

INSPECTION

INSPECT STEERING RACK

(a) Using a dial indicator, check the rack for runout, teeth wear and damage.

Maximum runout: 0.09 mm (0.0035 in.)

(b) Check the back surface for wear and damage.

SR02S−09

INSTALLATION

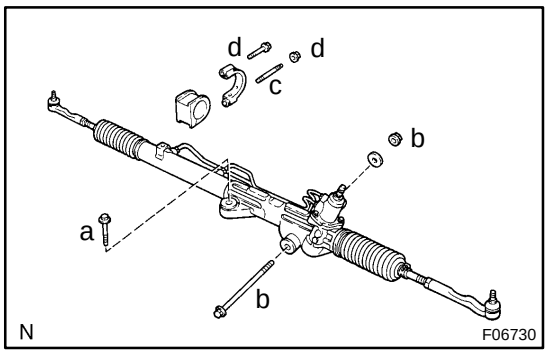

1. INSTALL GROMMET AND BRACKET

2. INSTALL PS GEAR ASSEMBLY

(a) Install the PS gear assembly with the gear assembly set bolt.
Torque: 165 N·m (1,700 kgf·cm, 123 ft·lbf)

(b) Install the gear assembly set bolt, washer and nut.
Torque: 130 N·m (1,350 kgf·cm, 96 ft·lbf)

(c) Install the stud bolt to the bracket.
Torque: 20 N·m (200 kgf·cm, 15 ft·lbf)

(d) Install the bolt and nut to the bracket.
Torque: 165 N·m (1,700 kgf·cm, 123 ft·lbf)

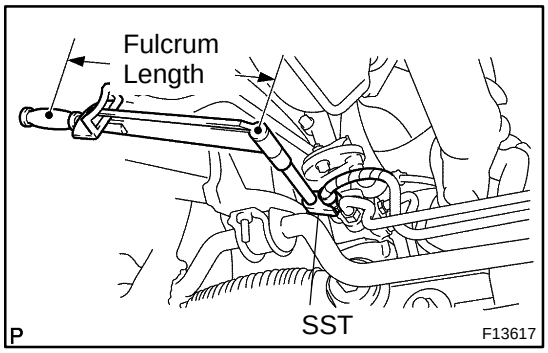

3. CONNECT PRESSURE FEED AND RETURN TUBES

Using SST, connect the tubes.
SST 09023−12701
Torque: 22 N·m (227 kgf·cm, 16 ft·lbf)

HINT:

- Use a torque wrench with a fulcrum length of 300 mm (11.81 in.).
- This torque value is effective in case that SST is parallel to a torque wrench.

4. CONNECT CLAMP PLATE

Connect the clamp plate and install the bolt.
Torque: 29 N·m (290 kgf·cm, 21 ft·lbf)

5. CONNECT NO. 2 INTERMEDIATE SHAFT ASSEMBLY (See page SR−28, SR−42)

6. CONNECT RH AND LH TIE ROD ENDS (See page SA−84)

7. POSITION FRONT WHEEL FACING STRAIGHT AHEAD

HINT:
Do it with the front of the vehicle jacked up.

8. CENTER SPIRAL CABLE (See page SR−28, SR−42)

9. INSTALL STEERING WHEEL

(a) Align the matchmark on the wheel and steering column main shaft.

(b) Temporarily tighten the wheel set nut.

(c) Connect the connector.

10. BLEED POWER STEERING SYSTEM (See page SR−4)

11. CHECK STEERING WHEEL CENTER POINT
12. TORQUE STEERING WHEEL SET NUT
    Torque: 50 N·m (510 kgf·cm, 37 ft·lbf)
13. INSTALL STEERING WHEEL PAD
    (See page SR−28, SR−42)
14. CHECK FRONT WHEEL ALIGNMENT
    (See page SA−5)
15. CONNECT CABLE TO NEGATIVE BATTERY TERMINAL
16. PERFORM YAW RATE AND DECELERATION SENSOR ZERO POINT CALIBRATION (See page DI−1474)

SR02R−10

REASSEMBLY

NOTICE:

When using a vise, do not overtighten it.

1. COAT PARTS INDICATED BY ARROWS WITH POWER STEERING FLUID OR MOLYBDENUM DISULFIDE LITHIUM BASE GREASE (See pages SR−70)

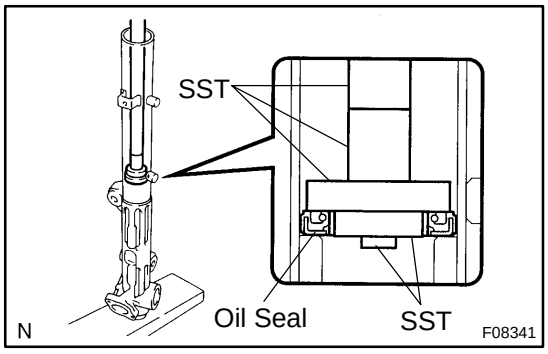

2. INSTALL OIL SEAL

(a) Coat a new oil seal lip with power steering fluid.

(b) Using SST, press in the oil seal.

SST 09950−60010 (09951−00330, 09951−00490, 09952−06010), 09950−70010 (09951−07360)

NOTICE:

- **Make sure to install the oil seal in the correct direction.**
- **Take care that the oil seal does not get reversed as you install it.**

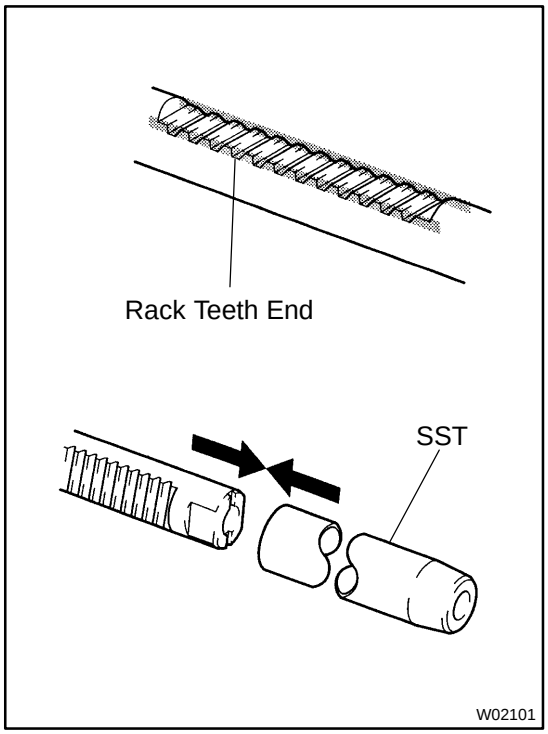

3. INSTALL STEERING RACK

(a) Install SST to the rack.

SST 09631−20051

HINT:

If necessary, scrape the burrs off the rack teeth end and burnish.

(b) Coat the SST with power steering fluid.

(c) Install the steering rack into the rack housing.

NOTICE:

Be careful not to damage the oil seal lip.

(d) Remove the SST.

SST 09631−20051

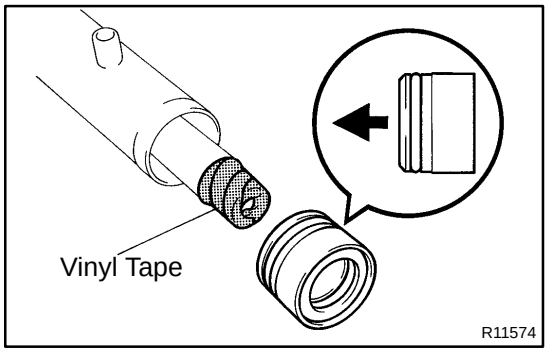

4. INSTALL BUSHING

(a) Coat a new O−ring with power steering fluid and install it to the bushing.

(b) To prevent oil seal lip damage, wind vinyl tape on the steering rack end, and apply power steering fluid.

(c) Install the bushing.

NOTICE:

- **Make sure to install the bushing in the correct direction.**
- **Be careful not to damage the oil seal lip.**

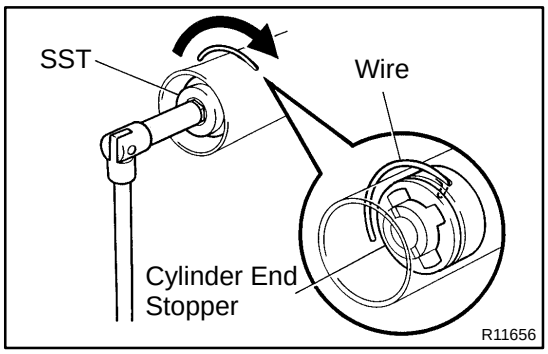

5. INSTALL CYLINDER END STOPPER

(a) Align the installation hole for the wire of the stopper with the slot of the rack housing.

(b) Install a new wire into the stopper.

(c) Using SST, turn the stopper clockwise 400˚ to 500˚.
SST 09631−16010

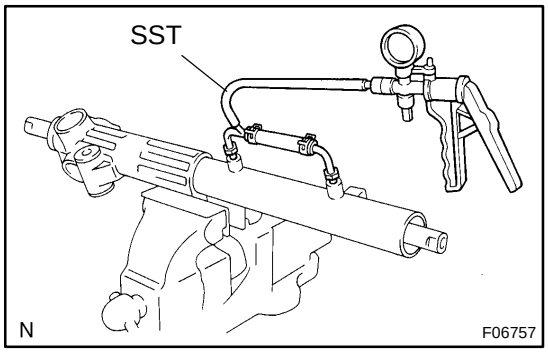

6. AIR TIGHTNESS TEST

(a) Install SST to the rack housing.
SST 09631−12071

(b) Apply 53 kPa (400 mmHg, 15.75 in.Hg) of vacuum for about 30 seconds.

(c) Check that there is no change in the vacuum.

If there is change in the vacuum, check the installation of the oil seals.

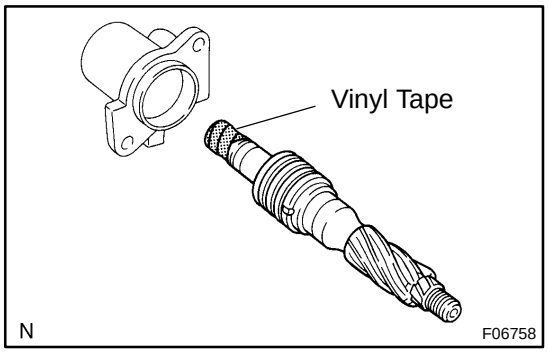

7. INSTALL CONTROL VALVE ASSEMBLY

(a) To prevent oil seal lip damage, wind vinyl tape on the serrated part of the valve shaft.

(b) Coat the teflon rings with power steering fluid.

(c) Install the valve assembly into the valve housing.

NOTICE:

Be careful not to damage the teflon rings and oil seal.

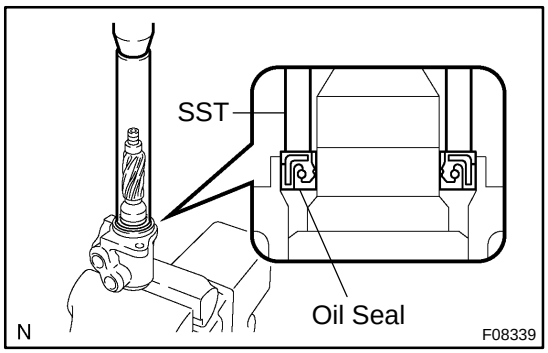

8. INSTALL OIL SEAL

(a) Coat a new oil seal lip with power steering fluid.

(b) Using SST, press in the oil seal.
SST 09612−22011

NOTICE:

Make sure to install the oil seal in the correct direction.

9. INSTALL CONTROL VALVE HOUSING WITH CONTROL VALVE ASSEMBLY

(a) Place a new gasket on the rack housing.

(b) Align the matchmark on the control valve housing with control valve assembly and rack housing.

(c) Install the 2 bolts.
Torque: 18 N·m (185 kgf·cm, 13 ft·lbf)

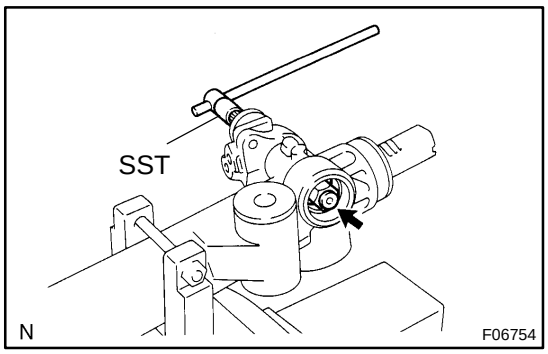

10. INSTALL SELF−LOCKING NUT

Using SST to stop the control valve shaft rotating, install a new nut.

SST 09616−00011

Torque: 30 N·m (300 kgf·cm, 22 ft·lbf)

11. INSTALL DUST COVER

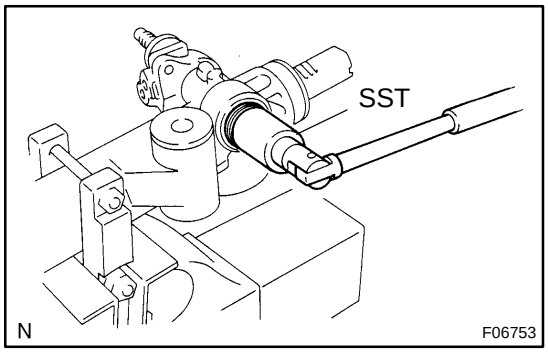

12. INSTALL RACK HOUSING CAP

(a) Apply sealant to 2 or 3 threads of the rack housing cap.

Sealant:
Part No.08833−00080, THREE BOND 1344, LOCTITE 242 or equivalent

(b) Using SST, install the rack housing cap.

SST 09816−30010

Torque: 59 N·m (600 kgf·cm, 43 ft·lbf)

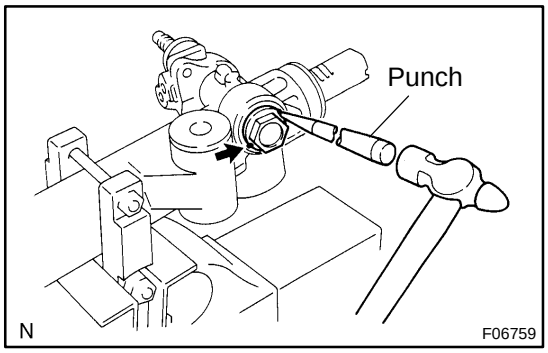

(c) Using a punch and hammer, stake the 2 parts of the cap.

13. INSTALL RACK GUIDE, RACK GUIDE SPRING AND RACK GUIDE SPRING CAP

(a) Install the rack guide and rack guide spring.

(b) Apply sealant to 2 or 3 threads of the rack guide spring cap.

Sealant:
Part No.08833−00080, THREE BOND 1344, LOCTITE 242 or equivalent

(c) Temporarily install the rack guide spring cap.

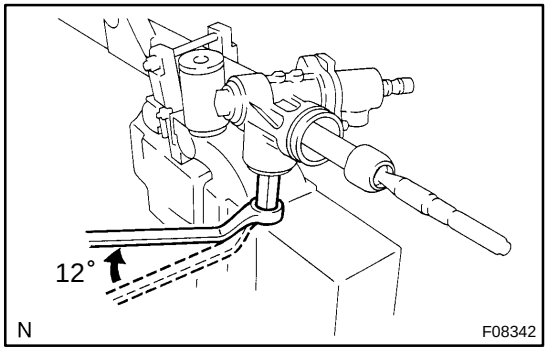

14. ADJUST TOTAL PRELOAD

(a) To prevent the steering rack teeth from damaging the oil seal lip, temporarily install the RH and LH rack ends.

(b) Using a hexagon wrench, install the rack guide spring cap.

Torque: 25 N·m (250 kgf·cm, 18 ft·lbf)

(c) Using a hexagon wrench, return the rack guide spring cap 12°.

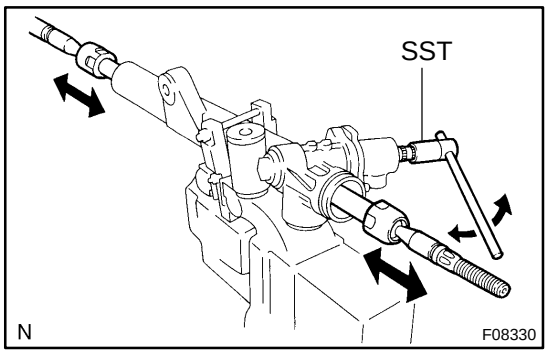

(d) Using SST, turn the control valve shaft right and left 1 or 2 times.
SST 09616−00011

(e) Using a hexagon wrench, loosen the rack guide spring cap until the rack guide spring is not functioning.

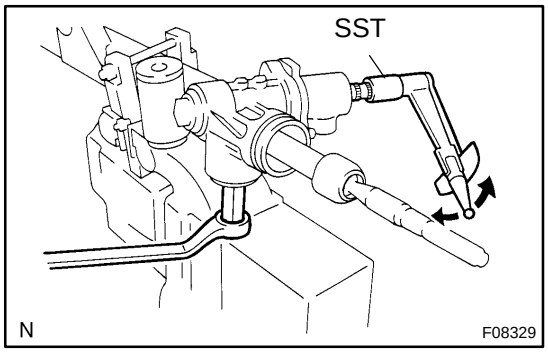

(f) Using SST, torque wrench and hexagon wrench, tighten the rack guide spring cap until the preload is within specification.
SST 09616−00011
Preload (turning):
1.0 to 1.45 N·m (10 to 14.5 kgf·cm, 8.7 to 12.6 in.·lbf)

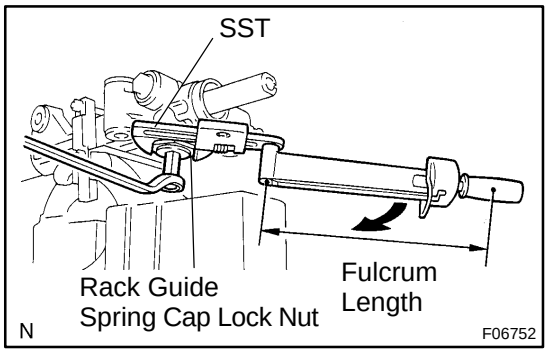

15. INSTALL RACK GUIDE SPRING CAP LOCK NUT

(a) Apply sealant to 2 or 3 threads of the lock nut.
Sealant:
Part No.08833−00080, THREE BOND 1344,
LOCTITE 242 or equivalent

(b) Temporarily install the lock nut.

(c) Using a hexagon wrench to hold the rack guide spring cap, and using SST, tighten the lock nut.
SST 09922−10010
Torque: 51 N·m (520 kgf·cm, 38 ft·lbf)

NOTICE:
Use SST 09922−10010 in the direction shown in the illustration.

HINT:
Use a torque wrench with a fulcrum length of 345 mm (13.58 in.).

(d) Recheck the total preload.
Preload (turning):
1.0 to 1.45 N·m (10 to 14.5 kgf·cm, 8.7 to 12.6 in.·lbf)

(e) Remove the RH and LH rack ends.

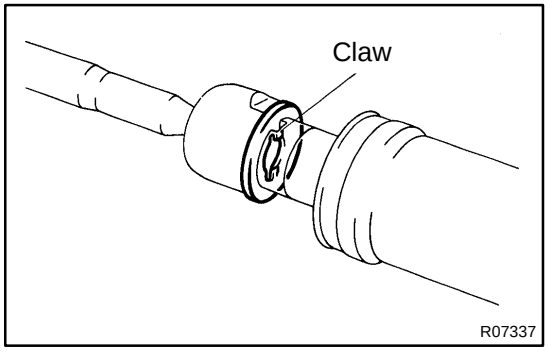

16. INSTALL RH AND LH CLAW WASHERS AND RACK ENDS

(a) Install a new claw washer, and temporarily install the rack end.

HINT:
Align the claws of the claw washer with the steering rack grooves.

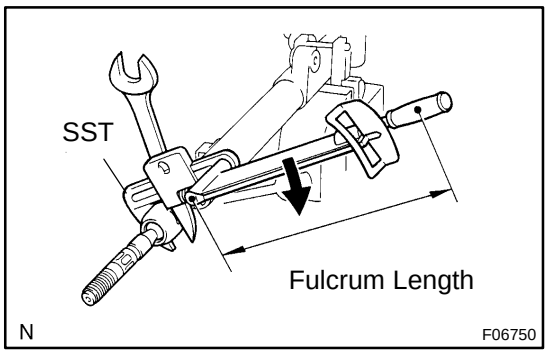

(b) Using a spanner to hold the steering rack steady, and using SST, tighten the rack end.
SST 09922−10010
Torque: 76 N·m (770 kgf·cm, 56 ft·lbf)

NOTICE:
Use SST 09922−10010 in the direction shown in the illustration.

HINT:
Use a torque wrench with a fulcrum length of 345 mm (13.58 in.).

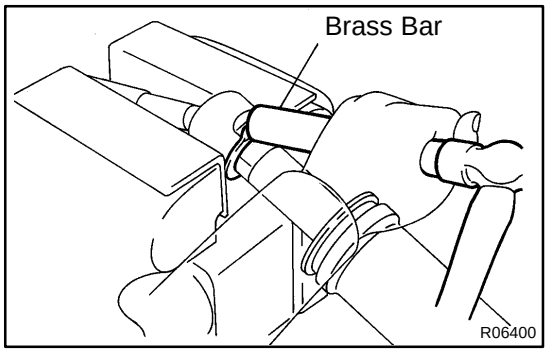

(c) Using a brass bar and hammer, stake the washer.

NOTICE:
Avoid any impact on the rack.

(d) Perform the same procedure on the other side.

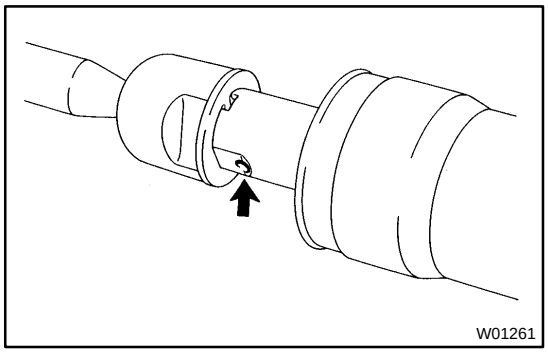

17. INSTALL RH AND LH RACK BOOTS, CLAMPS AND CLIPS

(a) Ensure that the steering rack hole is not clogged with grease.

HINT:
If the hole is clogged, the pressure inside the boot will change after it is assembled and the steering wheel is turned.

(b) Set a new clamp to the groove of the rack boot.

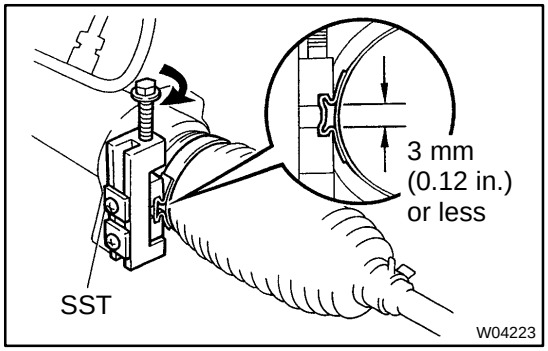

(c) Install the boot.

NOTICE:
Be careful not to damage or twist the boot.

(d) Using SST, tighten the clamp as shown in the illustration.
SST 09521−24010

(e) Install the clip to the rack boot.

(f) Perform the same procedure on the other side.

18. INSTALL RH AND LH TIE ROD ENDS AND LOCK NUTS

(a) Screw the lock nut and tie rod end onto the rack end until the matchmarks are aligned.

(b) After adjusting toe−in, tighten the nut
(See page SA−5).
Torque: 55 N·m (560 kgf·cm, 41 ft·lbf)

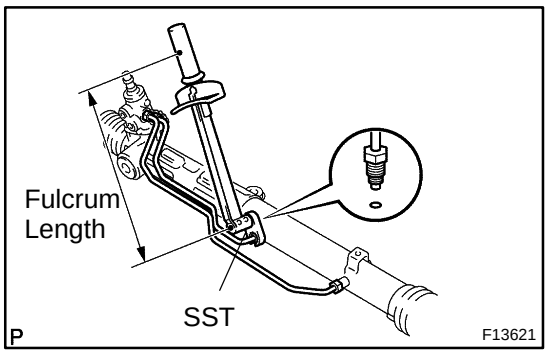

19. INSTALL 2 TURN PRESSURE TUBES

(a) Coat 4 new O−rings with power steering fluid and install them to the turn pressure tubes.

(b) Using SST, install the 2 turn pressure tubes.
SST 09023−34201
Torque: 13 N·m (135 kgf·cm, 10 ft·lbf)

HINT:

- Use a torque wrench with a fulcrum length of 250 mm (9.84 in.).
- This torque value is effective in case that SST is parallel to a torque wrench.

SR02O−10

REMOVAL

NOTICE:

Remove the steering wheel assembly before the steering gear removal, because there is possibility of breaking of the spiral cable.

1. DISCONNECT CABLE FROM NEGATIVE BATTERY TERMINAL

Wait for 90 seconds after disconnecting the cable to prevent the airbag working.

2. PLACE FRONT WHEELS FACING STRAIGHT AHEAD

3. REMOVE STEERING WHEEL PAD
(See page SR−18, SR−33)

4. REMOVE STEERING WHEEL
(See page SR−18, SR−33)

5. DISCONNECT RH AND LH TIE ROD ENDS
(See page SA−84)

6. DISCONNECT NO. 2 INTERMEDIATE SHAFT ASSEMBLY (See page SR−18, SR−33)

7. DISCONNECT CLAMP PLATE

Remove the bolt and disconnect the clamp plate.

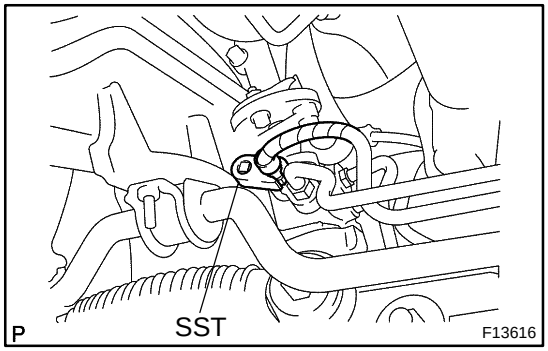

8. DISCONNECT PRESSURE FEED AND RETURN TUBES

Using SST, disconnect the tube.

SST 09023−12701

9. REMOVE PS GEAR ASSEMBLY

(a) Remove the bolt, nut and stud bolt from the bracket.

(b) Remove the 2 set bolts, nut, washer and PS gear assembly.

10. REMOVE BRACKET AND GROMMET

SR0VB−05

REPLACEMENT

NOTICE:

When using a vise, do not overtighten it.

1. IF NECESSARY, REPLACE OIL SEAL AND BEARING

(a) Using SST, press out the oil seal and bearing from the control valve housing.

SST 09950−60010 (09951−00250), 09950−70010 (09951−07150)

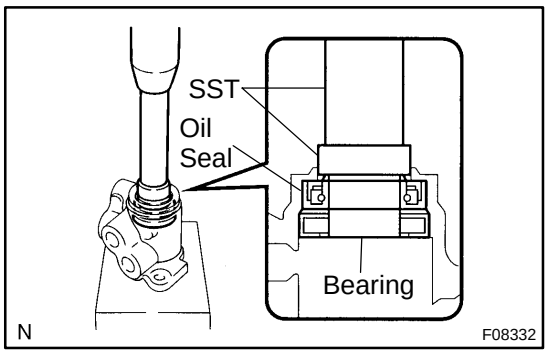

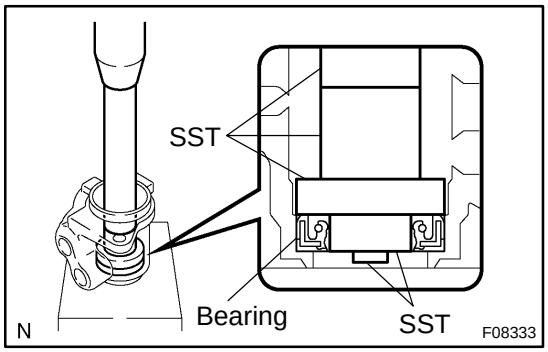

(b) Coat a new oil seal lip with power steering fluid.

(c) Using SST, press in the oil seal.

SST 09950−60010 (09951−00180, 09951−00320, 09952−06010), 09950−70010 (09951−07150)

NOTICE:

Make sure to install the oil seal in the correct direction.

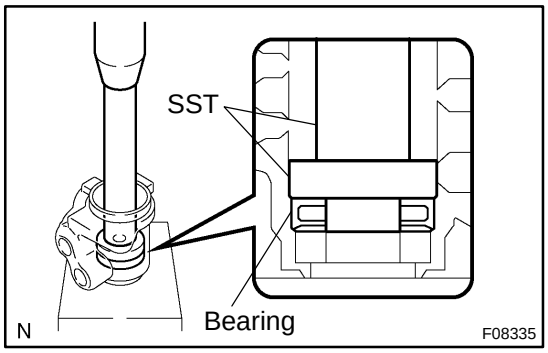

(d) Coat a new bearing with molybdenum disulfide lithium base grease.

(e) Using SST, press in the bearing.

SST 09950−60010 (09951−00340), 09950−70010 (09951−07150)

2. IF NECESSARY, REPLACE 2 BEARINGS

(a) Using SST, press out the bearing.

SST 09950−60010 (09951−00260), 09950−70010 (09951−07150)

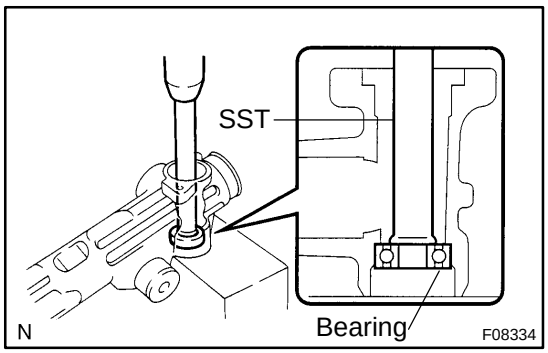

(b) Using SST, press out the bearing from the rack housing.

SST 09950−60010 (09951−00260), 09950−70010 (09951−07200)

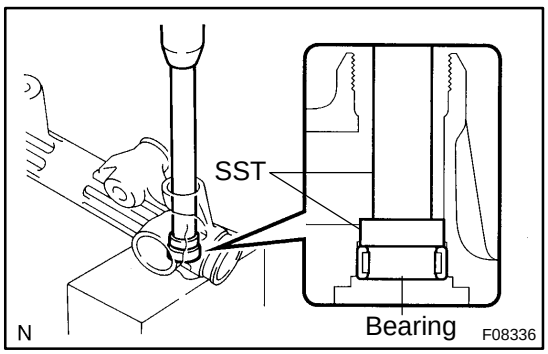

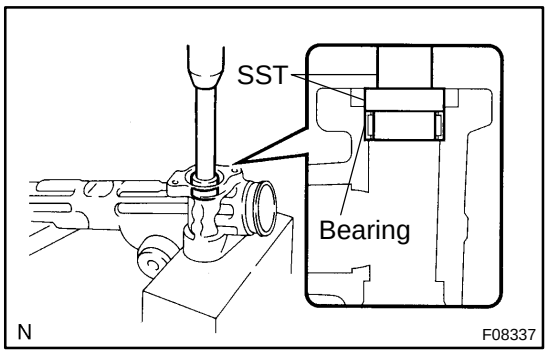

(c) Coat a new bearing with molybdenum disulfide lithium base grease.
(d) Using SST, press in the bearing.
SST 09950−60010 (09951−00310), 09950−70010 (09951−07150)

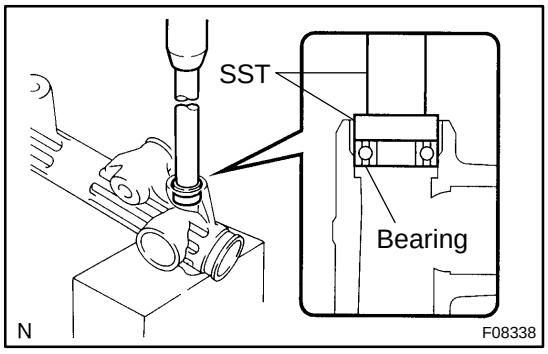

(e) Coat a new bearing with molybdenum disulfide lithium base grease.
(f) Using SST, press in the bearing.
SST 09950−60010 (09951−00320), 09950−70010 (09951−07150)

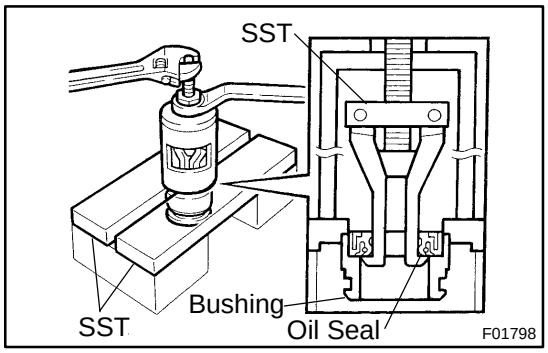

3. IF NECESSARY, REPLACE OIL SEAL

(a) Using SST, remove the oil seal from the bushing.
SST 09527−20011, 09612−24014 (09613−22011)

NOTICE:
Be careful not to damage the bushing.

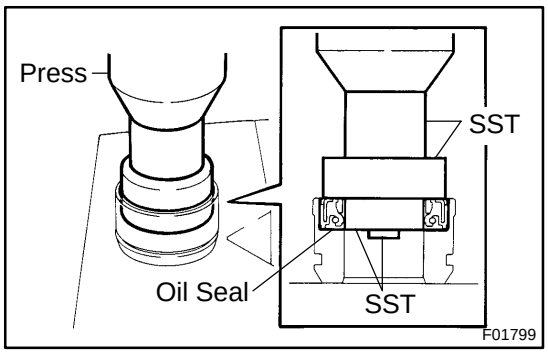

(b) Coat a new oil seal lip with power steering fluid.
(c) Using SST, press in the oil seal.
SST 09950−60010 (09951−00300, 09951−00460, 09952−06010)

NOTICE:
Make sure to install the oil seal in the correct direction.

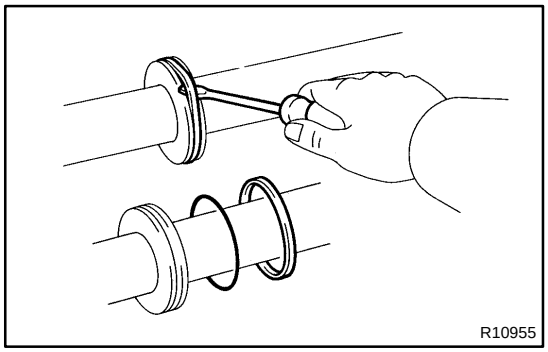

4. IF NECESSARY, REPLACE TEFLON RING AND O−RING

(a) Using a screwdriver, remove the teflon ring and O−ring from the steering rack.

NOTICE:
Be careful not to damage the groove for the teflon ring.

(b) Coat a new O−ring with power steering fluid and install it to steering rack.

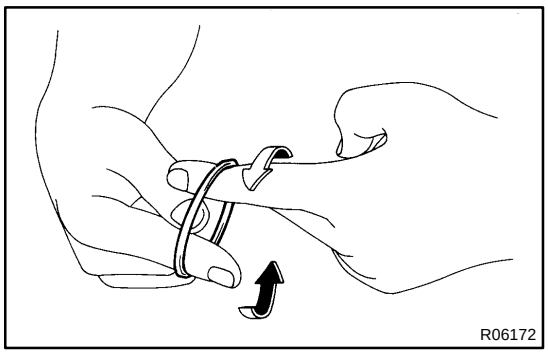

(c) Expand a new teflon ring with your fingers.

NOTICE:

Be careful not to over−expand the teflon ring.

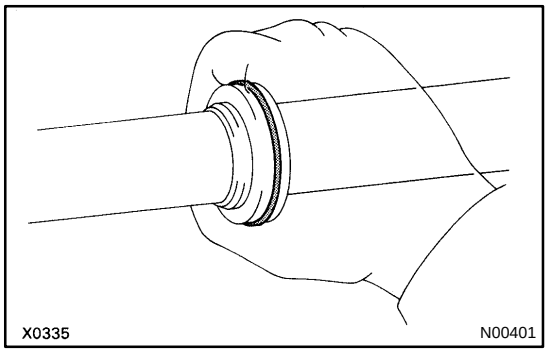

(d) Coat the teflon ring with power steering fluid.

(e) Install the teflon ring to the steering rack, and settle it down with your fingers.

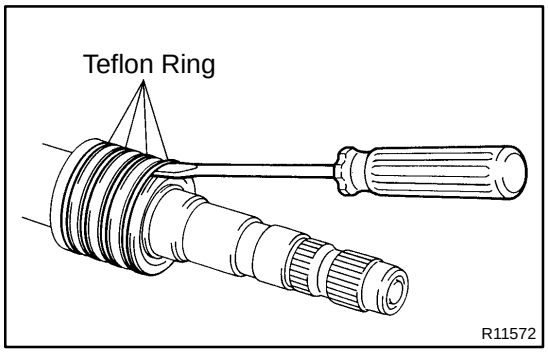

5. IF NECESSARY, REPLACE TEFLON RINGS

(a) Using a screwdriver, remove the 4 teflon rings from the control valve assembly.

NOTICE:

Be careful not to damage the grooves for the teflon ring.

(b) Expand 4 new teflon rings with your fingers.

NOTICE:

Be careful not to overexpand the teflon ring.

(c) Coat the teflon rings with power steering fluid.

(d) Install the teflon rings to the control valve assembly, and settle them down with your fingers.

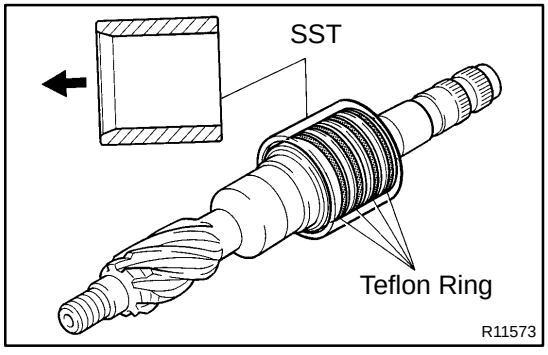

(e) Carefully slide the tapered end of SST over the teflon rings until they fit to the control valve assembly.
SST 09631−20081

NOTICE:

Be careful not to damage the teflon rings.

POWER STEERING VANE PUMP (1GR−FE)

SR1KS−01

COMPONENTS

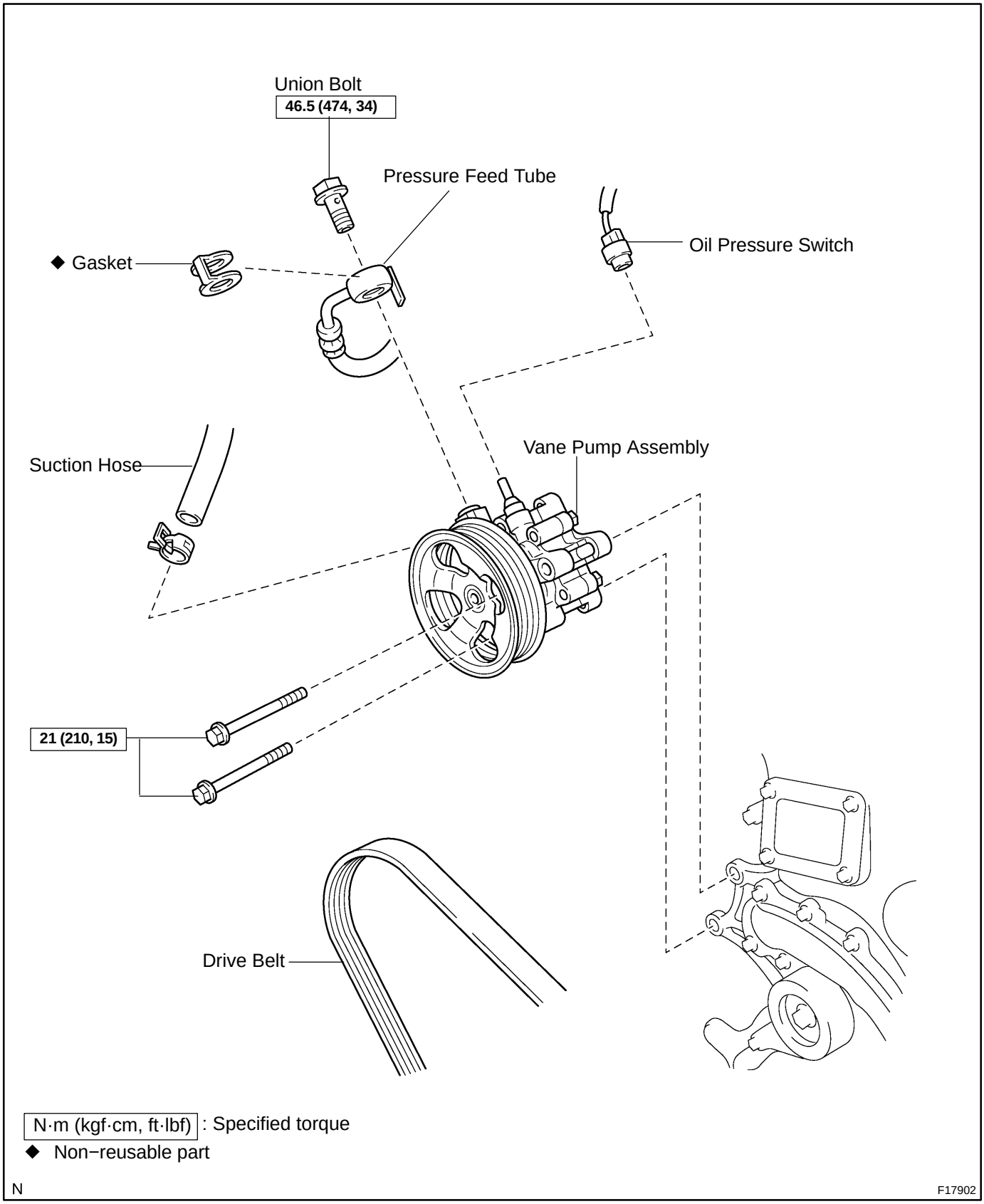

N·m (kgf·cm, ft·lbf) : Specified torque
◆ Non−reusable part

N

F17902

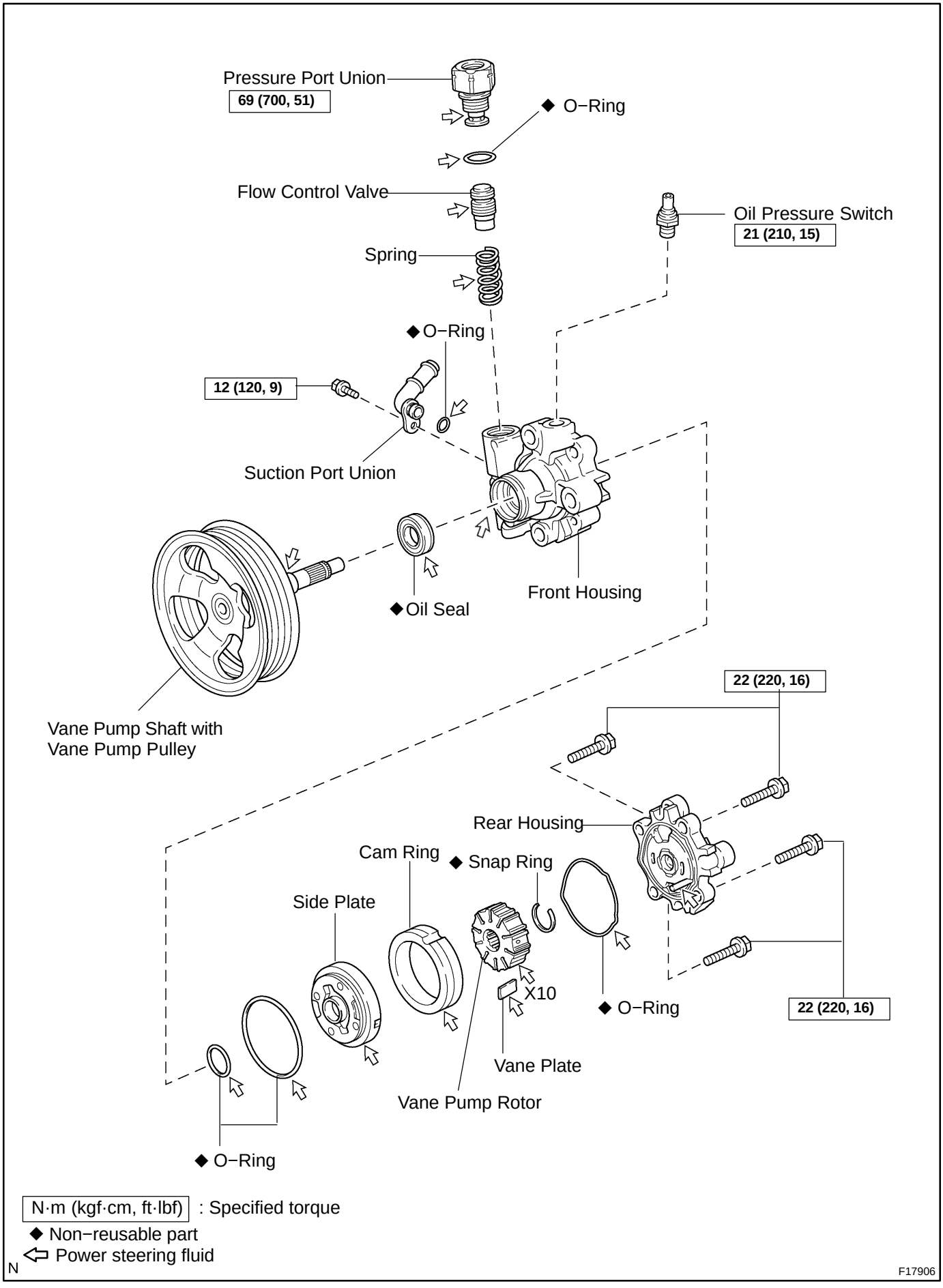
Pressure Port Union
69 (700, 51)
◆ O−Ring
Flow Control Valve
Oil Pressure Switch
21 (210, 15)
Spring
◆O−Ring
12 (120, 9)
Suction Port Union
◆Oil Seal
Front Housing
Vane Pump Shaft with
Vane Pump Pulley
22 (220, 16)
Rear Housing
Cam Ring
◆ Snap Ring
Side Plate
X10
◆ O−Ring
22 (220, 16)
Vane Plate
Vane Pump Rotor
◆ O−Ring
N·m (kgf·cm, ft·lbf) : Specified torque
◆ Non−reusable part
⇦ Power steering fluid
N
F17906

SR1KU−01

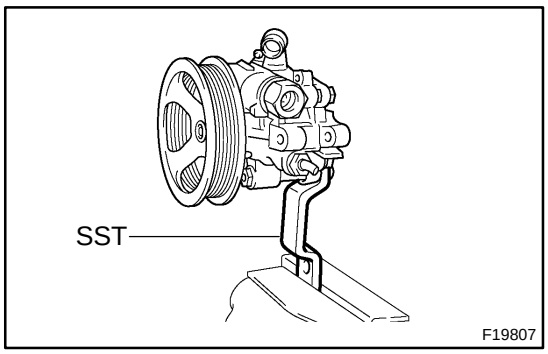

DISASSEMBLY

NOTICE:

When using a vise, do not overtighten it.

1. FIX VANE PUMP ASSEMBLY

(a) Using SST, hold the vane pump assembly in a vise.
SST 09630−00014 (09631−00132)

HINT:

Detach SST depending on the situation.

2. REMOVE SUCTION PORT UNION

(a) Remove the bolt and suction port union.

(b) Remove the O−ring from the suction port union.

3. REMOVE PRESSURE PORT UNION, FLOW CONTROL VALVE AND SPRING

(a) Remove the pressure port union, flow control valve and spring.

(b) Remove the O−ring from the pressure port union.

4. REMOVE OIL PRESSURE SWITCH

NOTICE:

If the oil pressure switch is dropped or damaged, replace it with a new one.

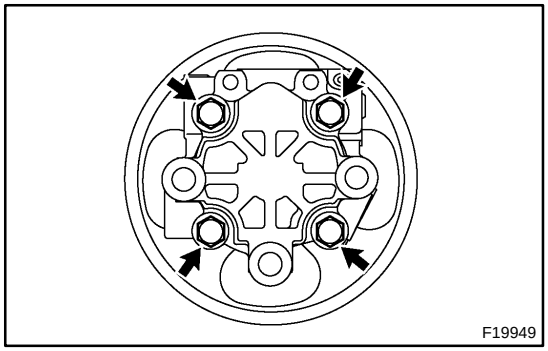

5. REMOVE REAR HOUSING

(a) Remove the 4 bolts and rear housing.

(b) Remove the O−ring from the rear housing.

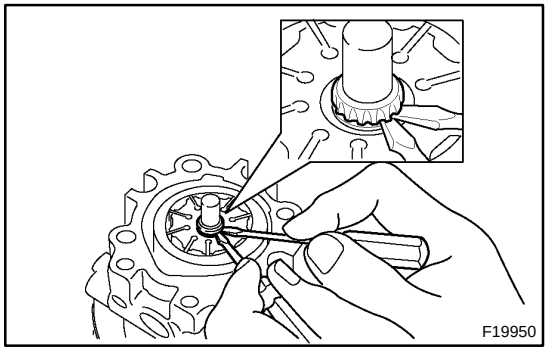

6. REMOVE VANE PUMP SHAFT WITH VANE PUMP PULLEY

(a) Using 2 screwdrivers, remove the snap ring from the vane pump shaft with vane pump pulley.

(b) Remove the vane pump shaft with vane pump pulley.

NOTICE:

Be careful not to drop or damage the vane pump shaft with vane pump pulley. If it is damaged, replace the vane pump assembly.

7. REMOVE 10 VANE PLATES AND VANE PUMP ROTOR

(a) Remove the 10 vane plates.

NOTICE:

Take care not to drop the vane plate.

(b) Remove the vane pump rotor.

8. REMOVE CAM RING

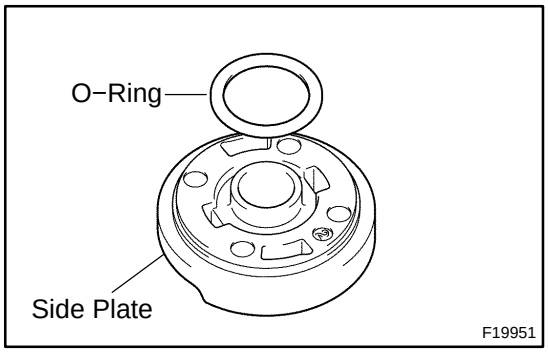

9. REMOVE SIDE PLATE

(a) Remove the side plate from the front housing.

(b) Remove the O−ring from the side plate.

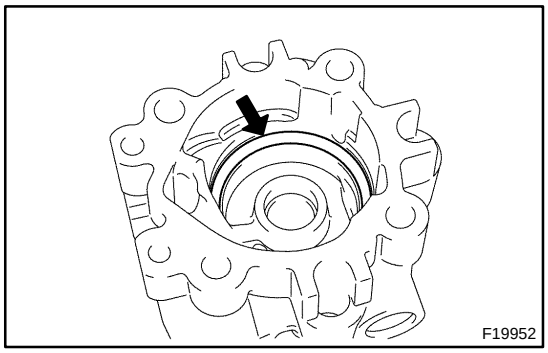

(c) Remove the O−ring from the front housing.

SR1KV−01

INSPECTION

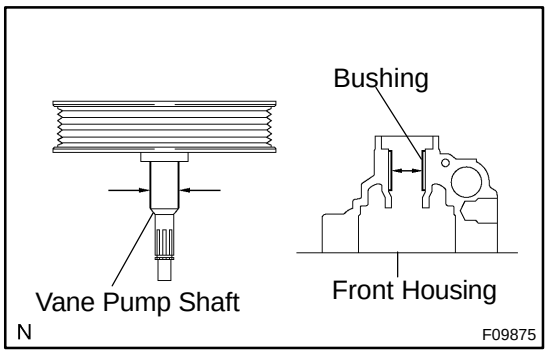

1. MEASURE OIL CLEARANCE BETWEEN VANE PUMP SHAFT AND BUSHING

Using a micrometer and a caliper gauge, measure the oil clearance.

Maximum clearance: 0.07 mm (0.0028 in.)

If it is more than the maximum, replace the vane pump assembly.

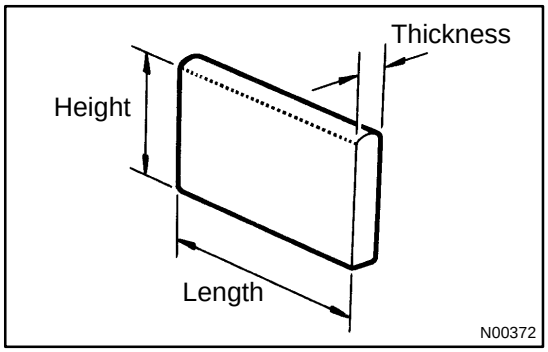

2. INSPECT VANE PUMP ROTOR AND VANE PLATES

(a) Using a micrometer, measure the thickness of the 10 vane plates.

Standard thickness:
1.405 to 1.411 mm (0.05531 to 0.05555 in.)

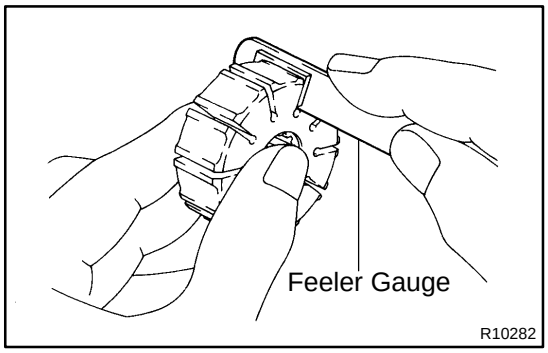

(b) Using a feeler gauge, measure the clearance between a side face of the vane pump rotor groove and the vane plate.

Maximum clearance: 0.03 mm (0.0012 in.)

If it is more than the maximum, replace the vane pump assembly.

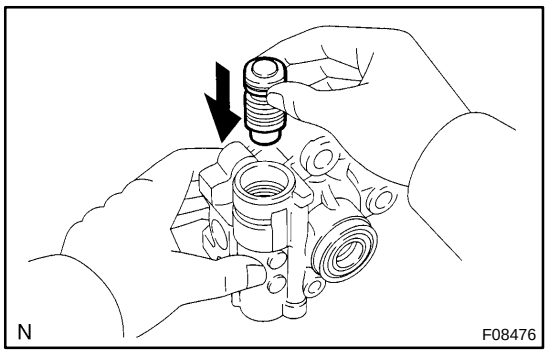

3. INSPECT FLOW CONTROL VALVE

(a) Coat the flow control valve with power steering fluid and check that it falls smoothly into the valve hole of the front housing under its own weight.

If it lacks smoothness, replace the vane pump assembly.

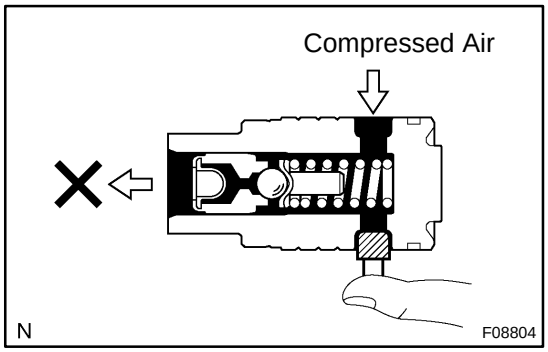

(b) Check the flow control valve for leakage. Close one of the holes and apply compressed air of 392 to 490 kPa (4 to 5 kgf/cm^2, 57 to 71 psi) into the opposite side hole, and confirm that air does not come out from the end hole.

If air leaks, replace the vane pump assembly.

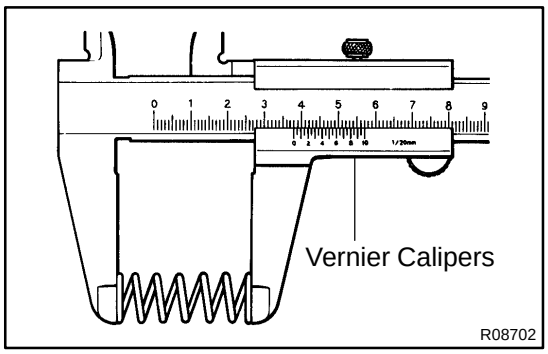

4. INSPECT SPRING

Using vernier calipers, measure the free length of the spring.

Minimum free length: 36.9 mm (1.453 in.)

If it is not within the specification, replace the vane pump assembly.

5. INSPECT PRESSURE PORT UNION

If the union seat in the pressure port union is severely damaged, it may cause fluid leakage. In that case, replace the vane pump assembly.

SR1KY−01

INSTALLATION

1. INSTALL VANE PUMP ASSEMBLY

(a) Install the vane pump assembly with the 2 bolts.
Torque: 21 N·m (210 kgf·cm, 15 ft·lbf)

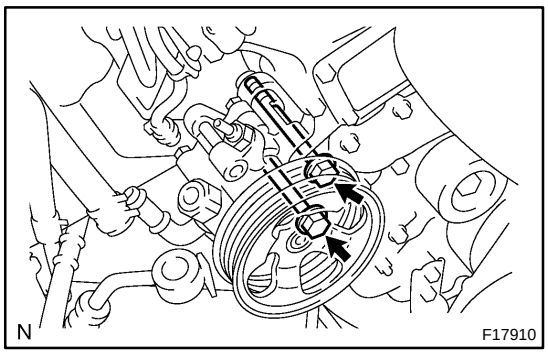

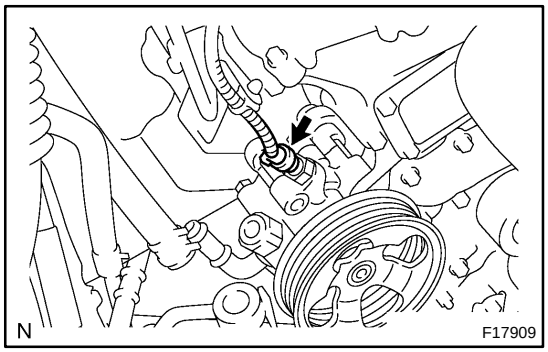

(b) Connect the oil pressure switch connector.

NOTICE:
Be careful that the oil does not come into contact with the connector.

2. CONNECT PRESSURE FEED TUBE

(a) Install a new gasket to the pressure feed tube.
(b) Install the pressure feed tube with the union bolt.

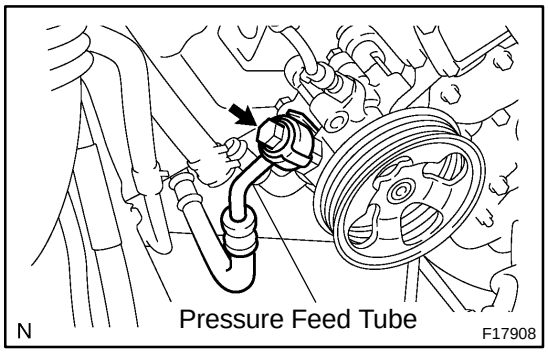

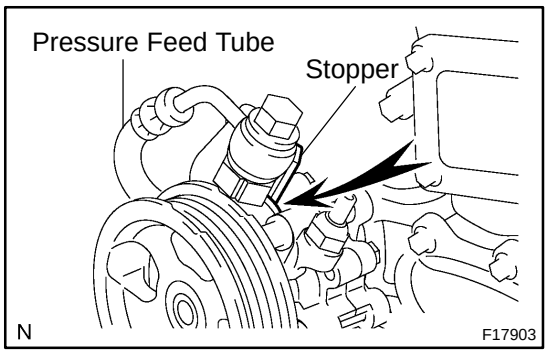

HINT:
Make sure that the stopper of the pressure feed tube contacts the pump housing as shown in the illustration.

(c) Tighten the union bolt.
Torque: 46.5 N·m (474 kgf·cm, 34 ft·lbf)

3. CONNECT SUCTION HOSE

Connect the suction hose with the clip.

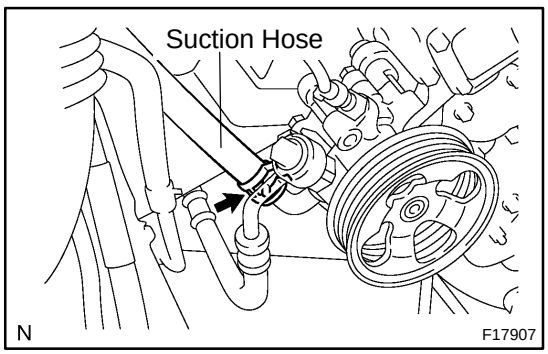

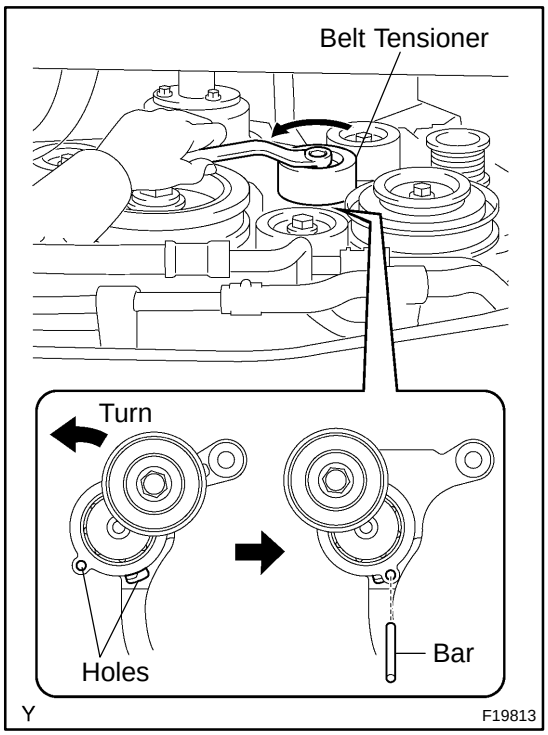

4. INSTALL DRIVE BELT

(a) While turning the belt tensioner counterclockwise, align the holes, and then insert a bar of 6 mm (0.24 in.) into the holes to fix the belt tensioner.

(b) Install the drive belt.

(c) While turning the belt tensioner counterclockwise, remove the bar.

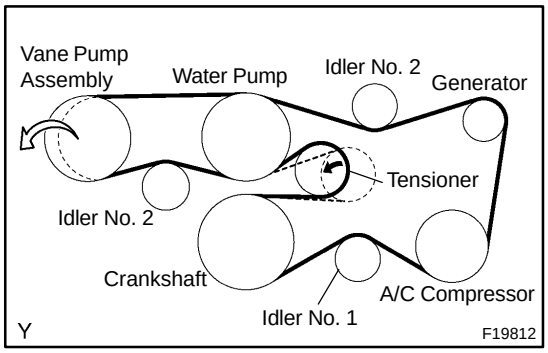

(d) If it is hard to install the drive belt, perform the following procedure:

(1) Wrap the drive belt around all the pulleys and idlers, except for the vane pump assembly, as shown in the illustration.

(2) While releasing belt tension by turning the belt tensioner counterclockwise, wrap the drive belt around the vane pump assembly.

5. ADD POWER STEERING FLUID

6. BLEED POWER STEERING FLUID

7. INSPECT FLUID LEAK

8. INSTALL ENGINE UNDER COVER

SR1KX−01

REASSEMBLY

NOTICE:

When using a vise, do not overtighten it.

1. COAT PARTS INDICATED BY ARROWS WITH POWER STEERING FLUID (See page SR−45)

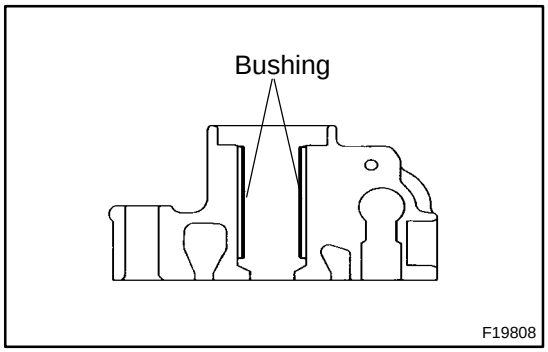

2. INSTALL VANE PUMP SHAFT WITH VANE PUMP PULLEY

(a) Coat the inside surface of the bushing in the front housing with power steering fluid.

(b) Gradually insert the vane pump shaft.

NOTICE:

Do not damage the oil seal lip in the front housing.

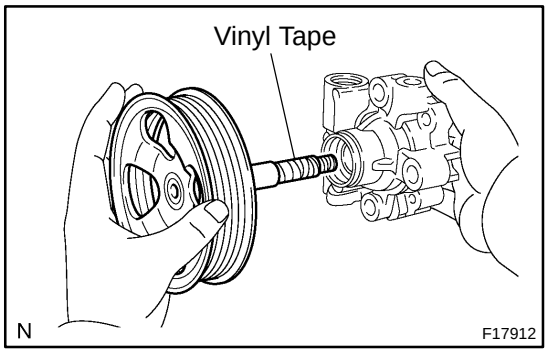

HINT:

Wrap the shaft surface with vinyl tape before inserting.

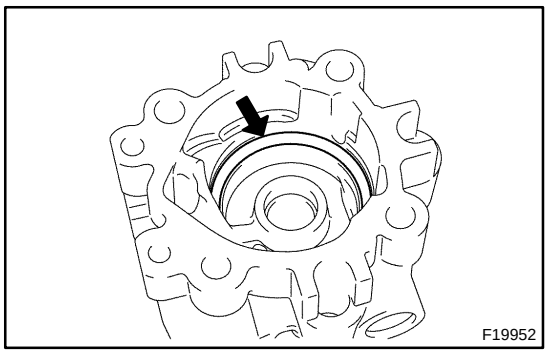

3. INSTALL SIDE PLATE

(a) Coat a new O−ring with power steering fluid, and install it to the front housing.

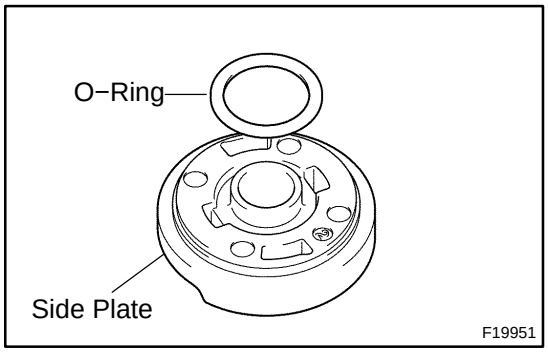

(b) Coat a new O−ring with power steering fluid, and install it to the side plate.

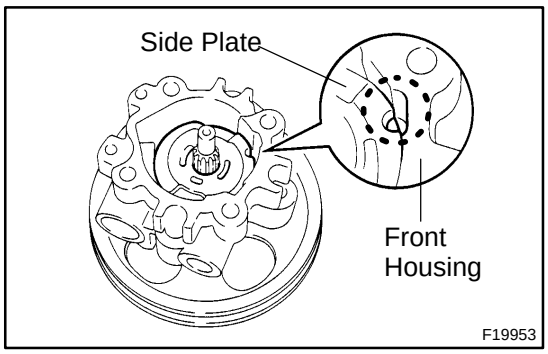

(c) Align the dent of the side plate with the dent of the front housing, and install the side plate.

NOTICE:

Make sure that the side plate is installed in the correct direction.

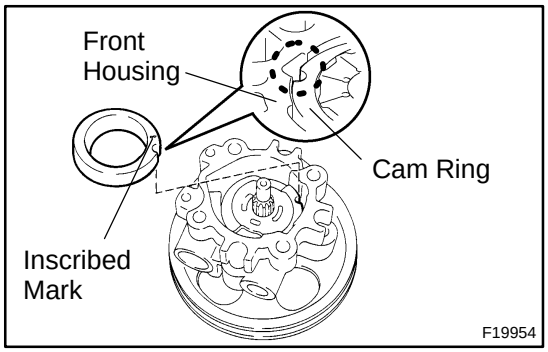

4. INSTALL CAM RING

Align the dent of the cam ring with the dent of the side plate, and install the cam ring with the inscribed mark facing outward.

NOTICE:

Make sure that the cam ring is installed in the correct direction.

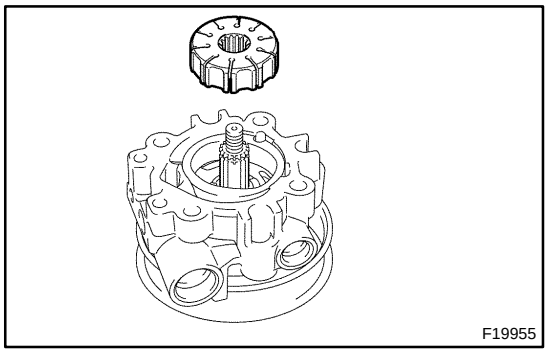

5. INSTALL VANE PUMP ROTOR

(a) Install the vane pump rotor.

HINT:

Vane pump rotor has no specific direction.

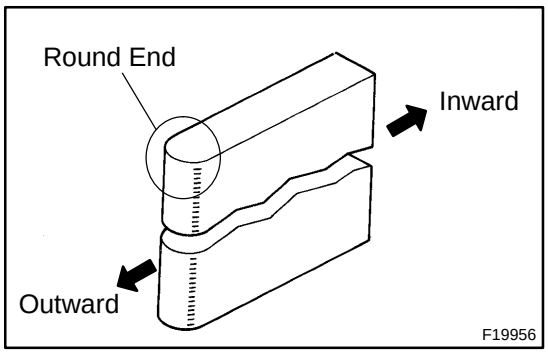

(b) Coat 10 vane plates with power steering fluid.

(c) Install the 10 vane plates with the round end facing outward.

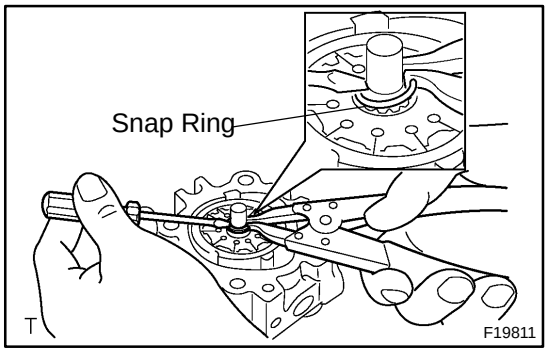

(d) Using a screwdriver and a snap ring expander, install a new snap ring to the vane pump shaft.

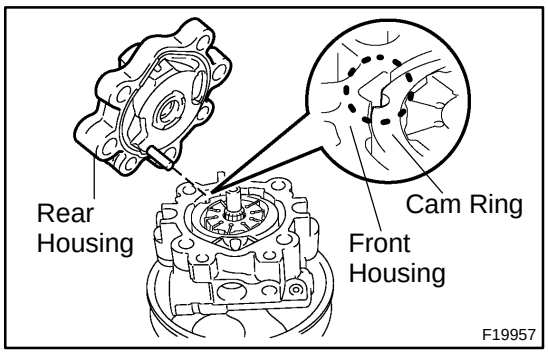

6. INSTALL REAR HOUSING

(a) Coat a new O−ring with power steering fluid, and install it to the rear housing.

(b) Align the straight pin of the rear housing with the dents of the cam ring, side plate and front housing, and install the rear housing with the 4 bolts.
Torque: 22 N·m (220 kgf·cm, 16 ft·lbf)

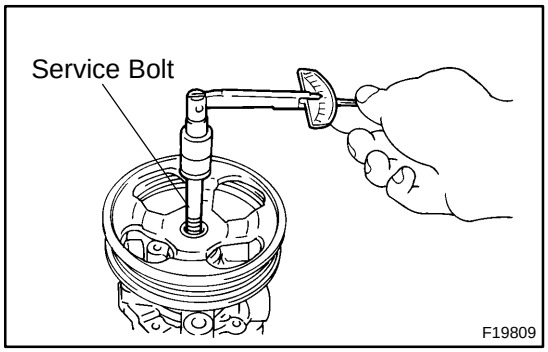

7. INSPECT PRELOAD

(a) Check that the pump rotates smoothly without abnormal noise.

(b) Temporarily install the service bolt.
Recommended service bolt:
Thread diameter: 10 mm (0.39 in.)
Thread pitch: 1.25 mm (0.0492 in.)
Bolt length: 50 mm (1.97 in.)

(c) Using a torque wrench, check the pump rotating torque.
Rotating torque:
0.27 N·m (2.8 kgf·cm, 2.4 in.·lbf) or less

If the rotating torque is not as specified above, check the installation of the vane pump housing oil seal.

8. INSTALL OIL PRESSURE SWITCH
Torque: 21 N·m (210 kgf·cm, 15 ft·lbf)

9. INSTALL SPRING, FLOW CONTROL VALVE AND PRESSURE PORT UNION

(a) Coat the spring and flow control valve with power steering fluid.

(b) Install the spring.

(c) Install the flow control valve in the correct direction (See page SR−45).

(d) Coat a new O−ring with power steering fluid, and install it to the pressure port union.

(e) Install the pressure port union.
Torque: 69 N·m (700 kgf·cm, 51 ft·lbf)

10. INSTALL SUCTION PORT UNION

(a) Coat a new O−ring with power steering fluid, and install it to the suction port union.

(b) Install the suction port union with the bolt.
Torque: 12 N·m (120 kgf·cm, 9 ft·lbf)

SR1KT−01

REMOVAL

1. REMOVE ENGINE UNDER COVER

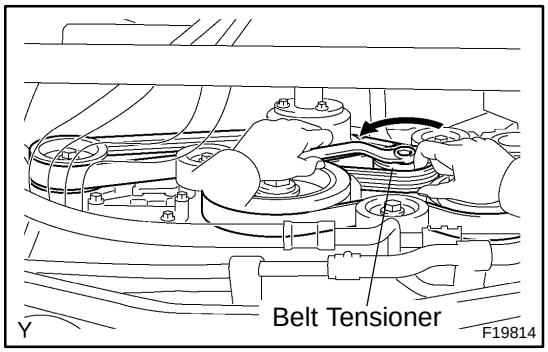

2. REMOVE DRIVE BELT

While releasing the belt tension by turning the belt tensioner counterclockwise, remove the drive belt.

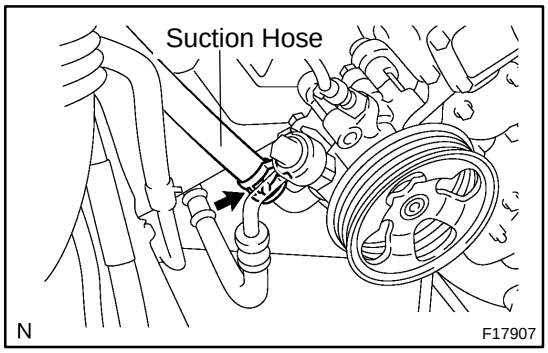

3. DISCONNECT SUCTION HOSE

Remove the clip and disconnect the suction hose.

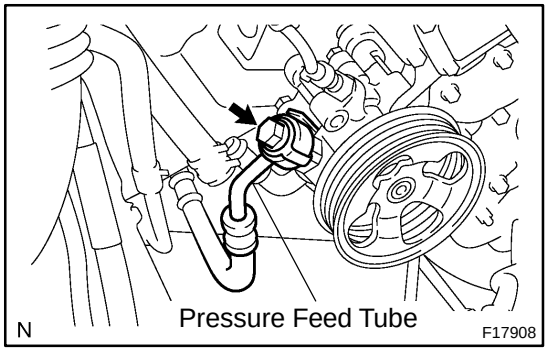

4. DISCONNECT PRESSURE FEED TUBE

(a) Remove the bolt and disconnect the pressure feed tube.
(b) Remove the gasket.

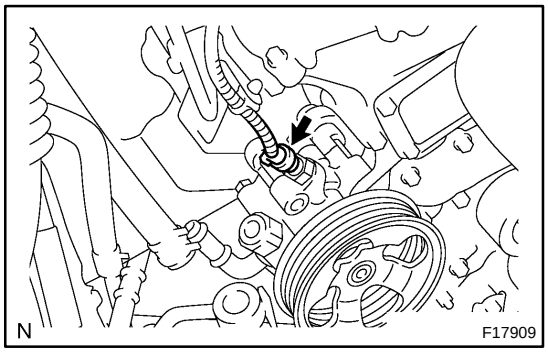

5. REMOVE VANE PUMP ASSEMBLY

(a) Disconnect the oil pressure switch connector.

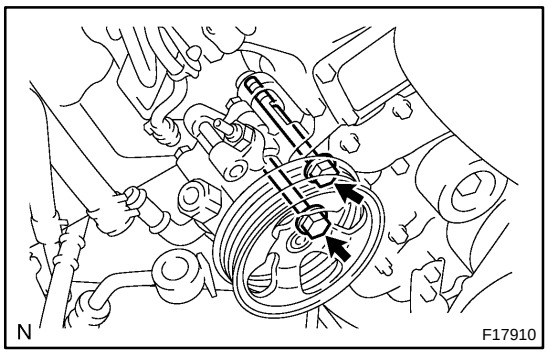

(b) Remove the 2 bolts and vane pump assembly.

SR1KW−01

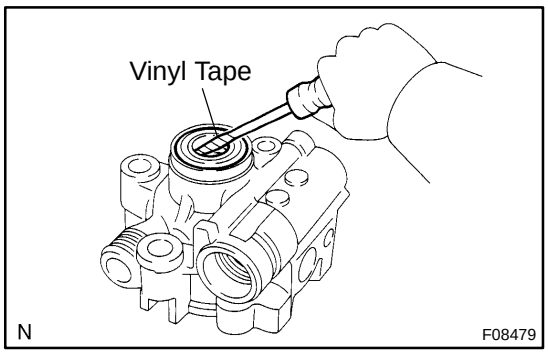

REPLACEMENT

NOTICE:

When using a vise, do not overtighten it.

IF NECESSARY, REPLACE OIL SEAL

(a) Using a screwdriver with vinyl tape wound around its tip, remove the oil seal.

NOTICE:

Be careful not to damage the bushing of the front housing.

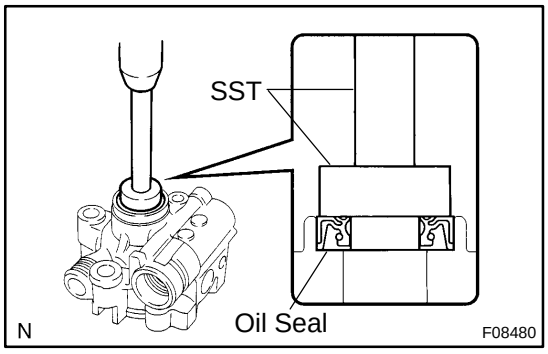

(b) Coat a new oil seal lip with power steering fluid.

(c) Using SST, press in the oil seal.

SST 09950−60010 (09951−00280),
09950−70010 (09951−07100)

NOTICE:

Make sure that the oil seal is installed in the correct direction.

POWER STEERING VANE PUMP (2UZ−FE)

SR0MD−14

COMPONENTS

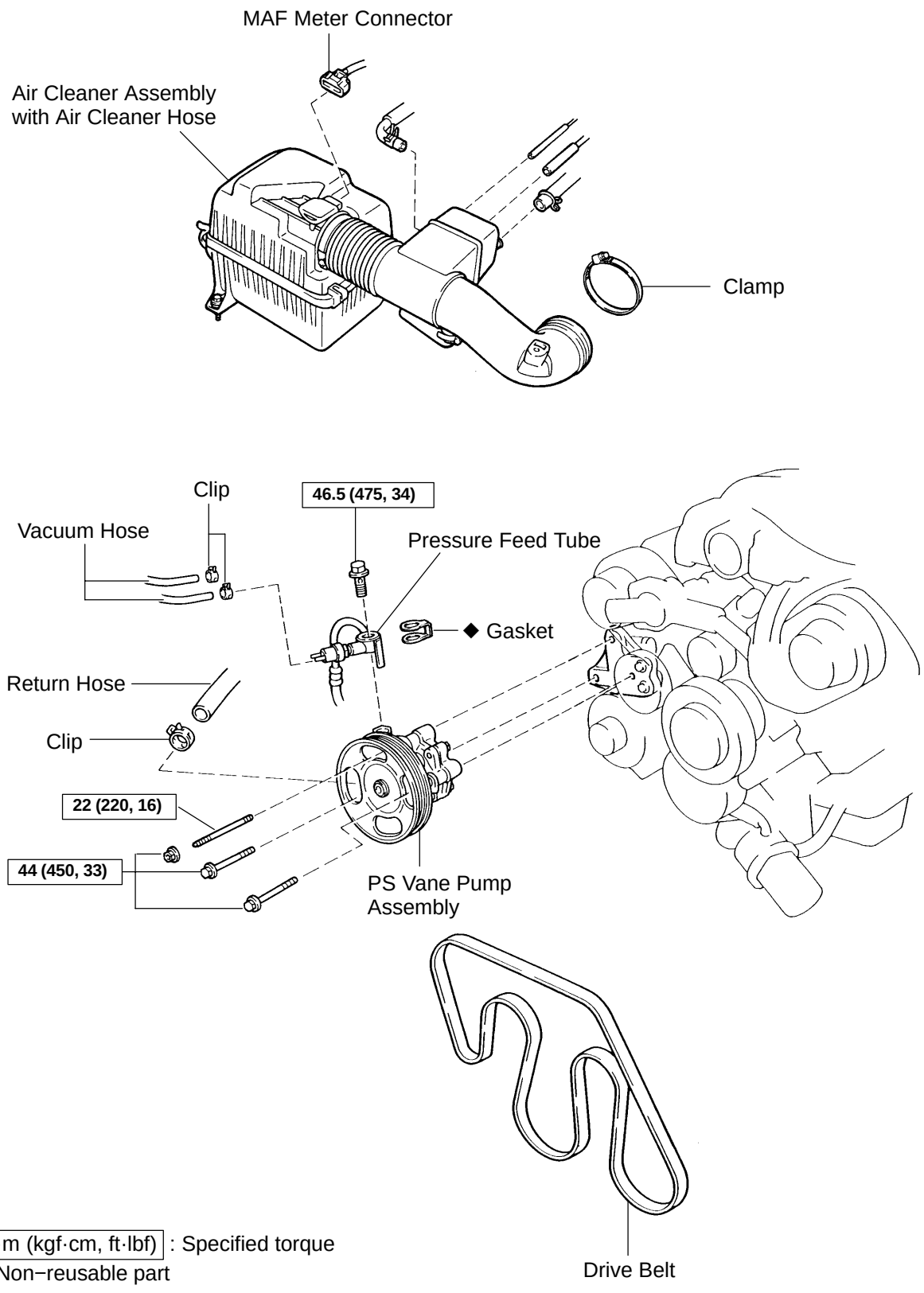

N·m (kgf·cm, ft·lbf) : Specified torque

◆ Non−reusable part

N

F06723

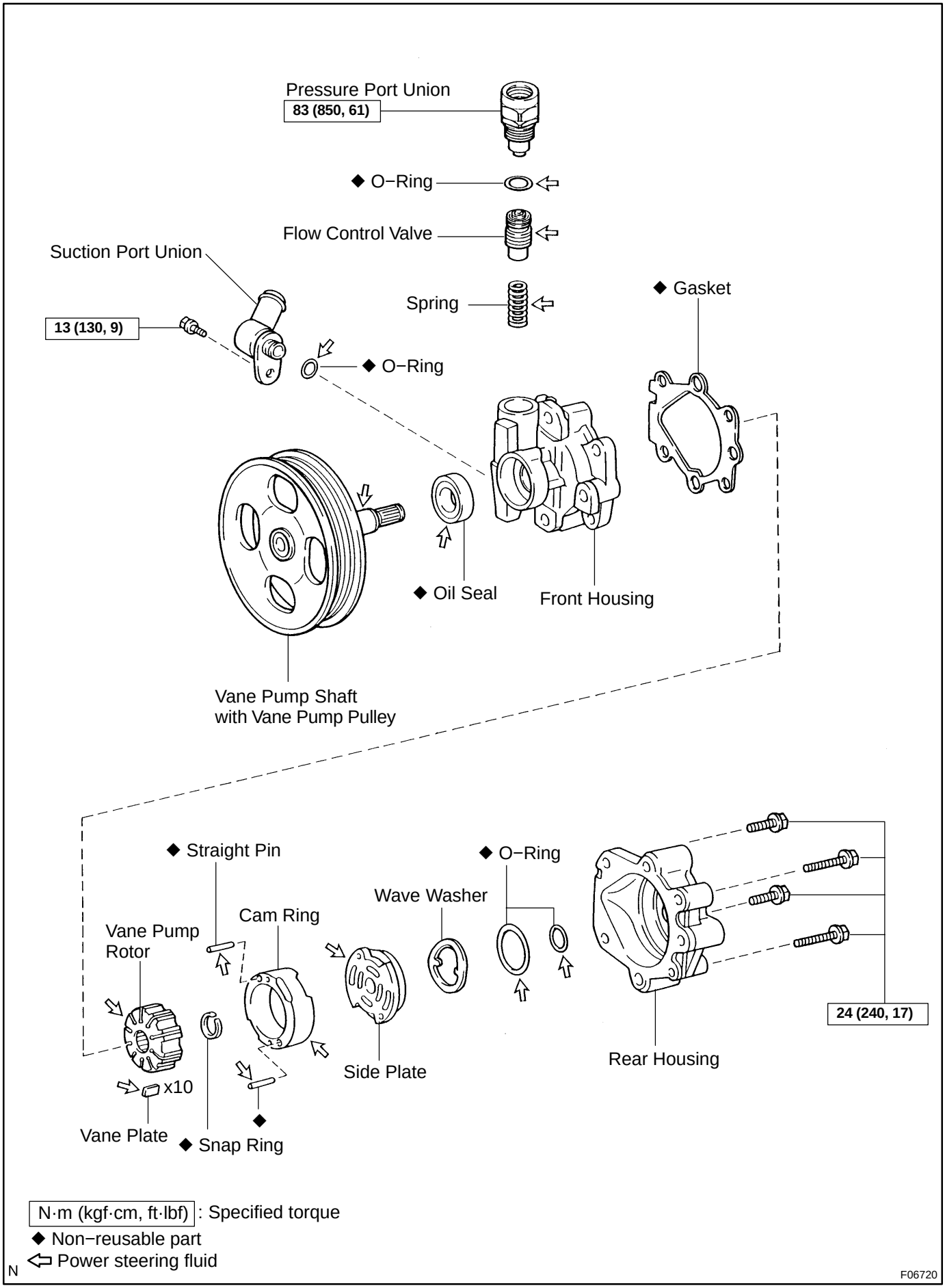
Pressure Port Union
83 (850, 61)
◆ O−Ring
Flow Control Valve
Suction Port Union
Spring
◆ Gasket
13 (130, 9)
◆ O−Ring
◆ Oil Seal
Front Housing
Vane Pump Shaft
with Vane Pump Pulley
◆ Straight Pin
◆ O−Ring
Wave Washer
Cam Ring
Vane Pump
Rotor
24 (240, 17)
Side Plate
Rear Housing
x10
Vane Plate
◆ Snap Ring
N·m (kgf·cm, ft·lbf) : Specified torque
◆ Non−reusable part
⇦ Power steering fluid
N
F06720

SR0V7−04

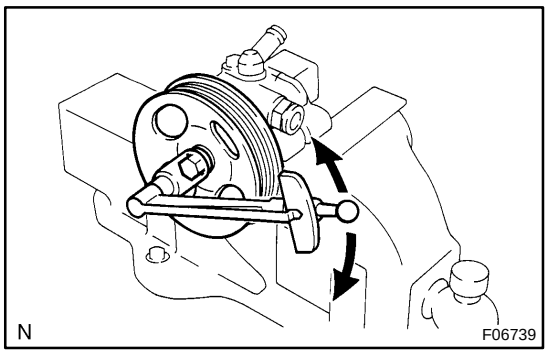

DISASSEMBLY

NOTICE:

When using a vise, do not overtighten it.

1. MEASURE PS VANE PUMP ROTATING TORQUE

(a) Check that the pump rotates smoothly without abnormal noise.

(b) Temporarily install the bolt.

(c) Using a torque wrench, check the pump rotating torque.

Rotating torque:

0.28 N·m (2.8 kgf·cm, 2.4 in.·lbf) or less

2. REMOVE SUCTION PORT UNION

(a) Remove the bolt and suction port union.

(b) Remove the O−ring from the union.

3. REMOVE PRESSURE PORT UNION, FLOW CONTROL VALVE AND SPRING

(a) Remove the pressure port union, the flow control valve and spring.

(b) Remove the O−ring from the pressure port union.

4. REMOVE REAR HOUSING

(a) Remove the 4 bolts and rear housing.

HINT:

If the wave washer and side plate are stuck to the rear housing, lightly tap the rear housing with a plastic hammer, and remove the wave washer and side plate.

(b) Remove the 2 O−rings from the rear housing.

5. REMOVE WAVE WASHER

6. REMOVE SIDE PLATE

7. REMOVE GASKET

8. REMOVE CAM RING, 10 VANE PLATES AND VANE PUMP ROTOR

(a) Using a screwdriver, remove the snap ring from the vane pump shaft.

(b) Remove the cam ring, 10 vane plates and vane pump rotor.

NOTICE:

Be careful not to drop the plates.

9. REMOVE VANE PUMP SHAFT WITH VANE PUMP PULLEY

10. REMOVE STRAIGHT PINS

Remove the 2 pins from the front housing.

SR0RF−05

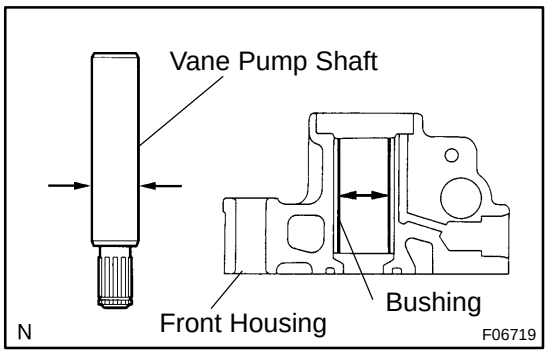

INSPECTION

1. CHECK OIL CLEARANCE BETWEEN VANE PUMP SHAFT AND BUSHING

Using a micrometer and caliper gauge, measure the oil clearance.

Standard clearance:
0.03 to 0.05 mm (0.0012 to 0.0020 in.)
Maximum clearance: 0.07 mm (0.0028 in.)

If it is more than the maximum, replace the shaft and front housing.

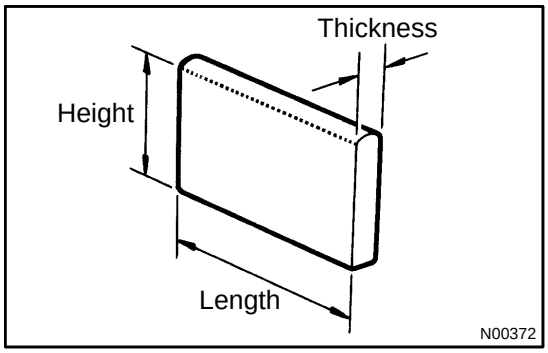

2. INSPECT VANE PUMP ROTOR AND VANE PLATES

(a) Using a micrometer, measure the height, thickness and length of the 10 plates.
Minimum height: 8.6 mm (0.339 in.)
Minimum thickness: 1.397 mm (0.0550 in.)
Minimum length: 14.991 mm (0.5902 in.)

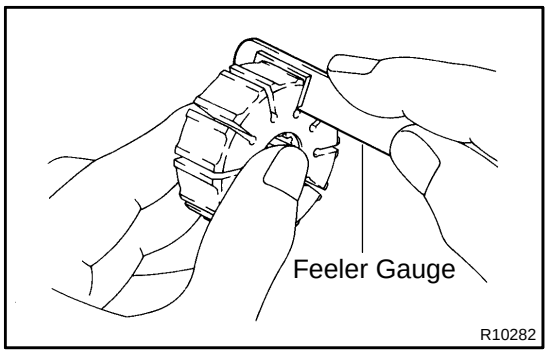

(b) Using a feeler gauge, measure the clearance between the rotor groove and plate.
Maximum clearance: 0.033 mm (0.0013 in.)

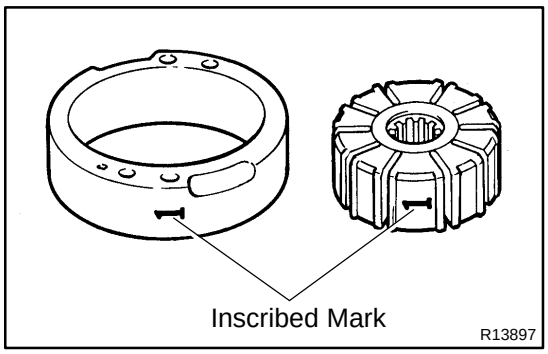

If it is more than the maximum, replace the plate and/or rotor with the one having the same mark stamped on the cam ring.

Inscribed mark: 1, 2, 3, 4 or None

HINT:

There are 5 vane plate lengths with the following rotor and cam ring marks:

Rotor and cam ring mark	Vane plate part number	Vane plate length mm (in.)
None	44345−04010	14.999−15.001 (0.59051−0.59059)
1	44345−04020	14.997−14.999 (0.59043−0.59051)
2	44345−04030	14.995−14.997 (0.59035−0.59043)
3	44345−04040	14.993−14.995 (0.59027−0.59035)
4	44345−04050	14.991−14.993 (0.59020−0.59027)

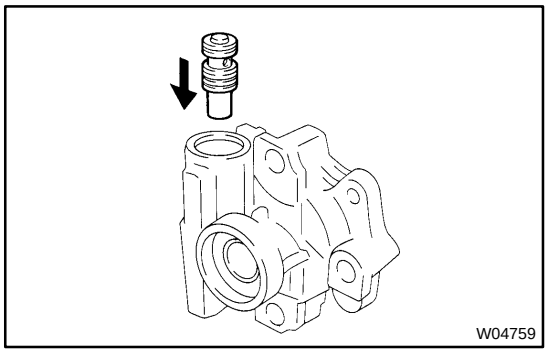

3. INSPECT FLOW CONTROL VALVE

(a) Coat the valve with power steering fluid and check that it falls smoothly into the valve hole under its own weight.

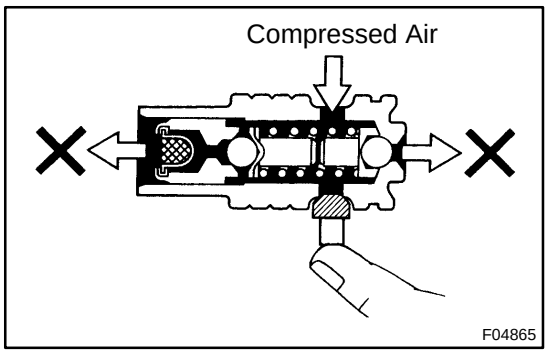

(b) Check the flow control valve for leakage.
Close one of the holes and apply compressed air 392 to 490 kPa (4 to 5 kgf/cm^2, 57 to 71 psi) into the opposite side, and confirm that air does not come out from the end holes.

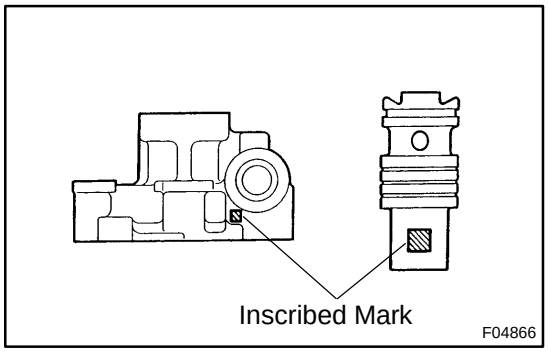

If necessary, replace the valve with the one having the same letter inscribed on the front housing.

Inscribed mark: A, B, C, D, E or F

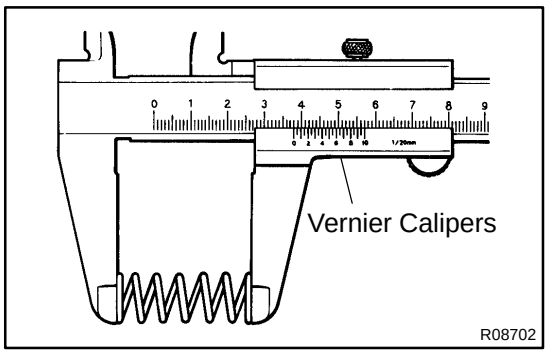

4. INSPECT SPRING

Using vernier calipers, measure the free length of the spring.

Minimum free length: 33.2 mm (1.307 in.)

If it is not within the specification, replace the spring.

SR0MI−14

INSTALLATION

1. INSTALL PS VANE PUMP ASSEMBLY

(a) Install the PS vane pump assembly with the stud bolt.
Torque: 22 N·m (220 kgf·cm, 16 ft·lbf)

(b) Install the 2 bolt and nut.
Torque: 44 N·m (450 kgf·cm, 33 ft·lbf)

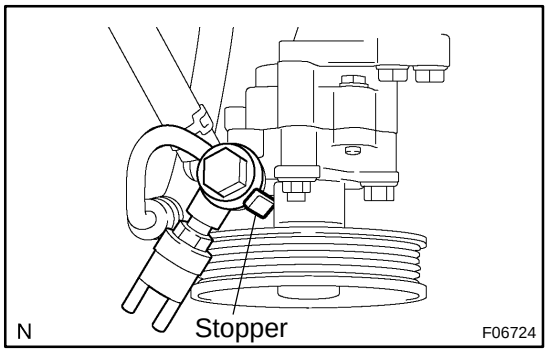

2. INSTALL PRESSURE FEED TUBE

(a) Connect the pressure feed tube.

(b) Install a new gasket and the union bolt on the pressure feed tube.

HINT:
Make sure that the stopper of the pressure feed tube contacts the PS vane pump body as shown in the illustration, then tighten the union bolt.
Torque: 46.5 N·m (475 kgf·cm, 34 ft·lbf)

3. CONNECT RETURN HOSE

Connect the return hose with the clip.

4. CONNECT 2 VACUUM HOSES

Connect the 2 vacuum hoses and install the 2 clips.

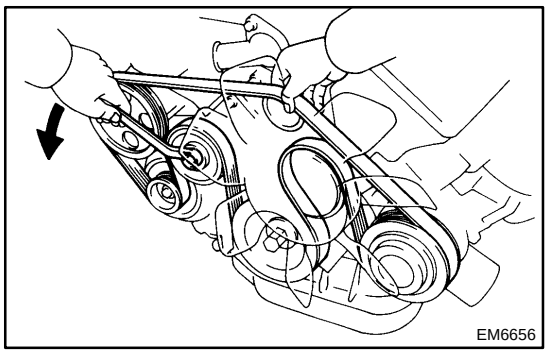

5. INSTALL DRIVE BELT

Loosen the drive belt tension by turning the drive belt tensioner counterclockwise, and install the belt.

6. INSTALL AIR CLEANER ASSEMBLY WITH AIR CLEANER HOSE

(a) Install the air cleaner assembly with air cleaner hose and the 3 bolts.

(b) Install the clamp.

(c) Connect the hoses.

(d) Connect the MAF meter connector.

7. BLEED POWER STEERING SYSTEM
(See page SR−4)

SR0V8−05

REASSEMBLY

NOTICE:

When using a vise, do not overtighten it.

1. COAT PARTS INDICATED BY ARROWS WITH POWER STEERING FLUID (See page SR−59)

2. INSTALL VANE PUMP SHAFT WITH VANE PUMP PULLEY

3. INSTALL STRAIGHT PINS

Using a plastic hammer, tap in 2 new pins into the front housing.

NOTICE:

Be careful not to damage the pins.

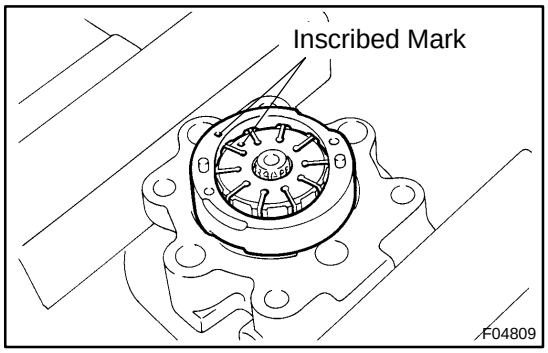

4. INSTALL CAM RING

Install the cam ring with the inscribed mark facing outward.

HINT:

Align the hole of the cam ring with the one of the straight pins.

5. INSTALL VANE PUMP ROTOR

(a) Install the vane pump rotor with the inscribed mark facing outward.

(b) Install a new snap ring to the vane pump shaft.

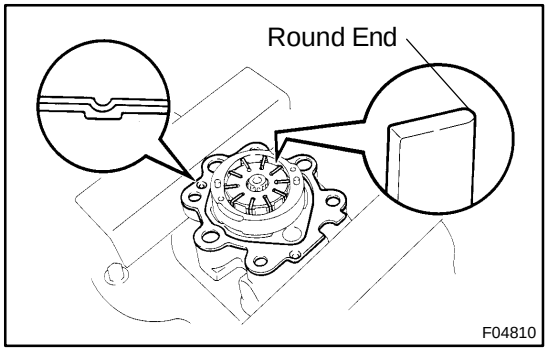

6. INSTALL VANE PLATES AND GASKET

(a) Install the 10 plates with the round end facing outward.

(b) Install a new gasket on the front housing.

NOTICE:

Be careful of the direction of the gasket.

7. INSTALL SIDE PLATE

Align the hole of the plate with the hole of the 2 straight pins.

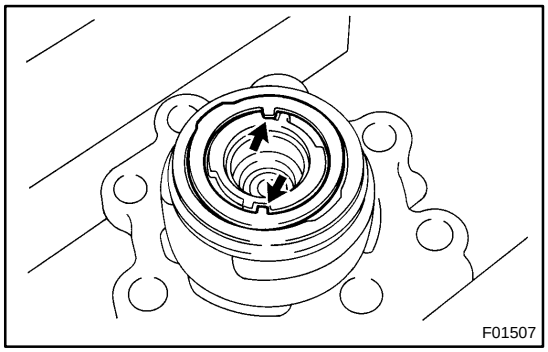

8. INSTALL WAVE WASHER

Install the washer so that the protrusions fit into the slots in the side plate.

9. INSTALL REAR HOUSING

(a) Coat 2 new O−rings with power steering fluid and install them to the rear housing.

(b) Install the rear housing with the 4 bolts.

Torque: 24 N·m (240 kgf·cm, 17 ft·lbf)

10. INSTALL SPRING, FLOW CONTROL VALVE AND PRESSURE PORT UNION

(a) Install the spring on the front housing.

(b) Install the flow control valve in the correct direction (See page SR−59).

(c) Coat a new O−ring with power steering fluid and install it on the pressure port union.

(d) Install the pressure port union.

Torque: 83 N·m (850 kgf·cm, 61 ft·lbf)

11. INSTALL SUCTION PORT UNION

(a) Coat a new O−ring with power steering fluid and install it on the suction port union.

(b) Install the suction port union with the bolt.

Torque: 13 N·m (130 kgf·cm, 9 ft·lbf)

12. MEASURE PS VANE PUMP ROTATING TORQUE (See page SR−62)

SR0ME−08

REMOVAL

1. REMOVE AIR CLEANER ASSEMBLY WITH AIR CLEANER HOSE

(a) Disconnect the MAF meter connector.
(b) Disconnect the hoses.
(c) Remove the clamp.
(d) Remove the 3 bolts and air cleaner assembly with air cleaner hose connected.

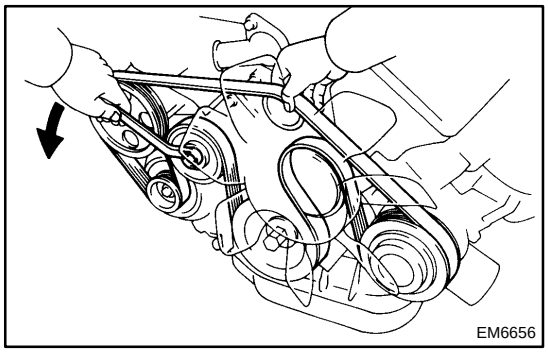
EM6656

2. REMOVE DRIVE BELT

Loosen the drive belt tension by turning the drive belt tensioner counterclockwise, and remove the drive belt.

3. DISCONNECT 2 VACUUM HOSES

Remove the 2 clips and disconnect the 2 vacuum hoses.

4. DISCONNECT RETURN HOSE

Remove the clip and disconnect the return hose.

5. DISCONNECT PRESSURE FEED TUBE

Remove the union bolt and gasket, disconnect the pressure feed tube.

6. REMOVE PS VANE PUMP ASSEMBLY

Remove the 2 bolts, nut, stud bolt and PS vane pump assembly.

SR0RG−09

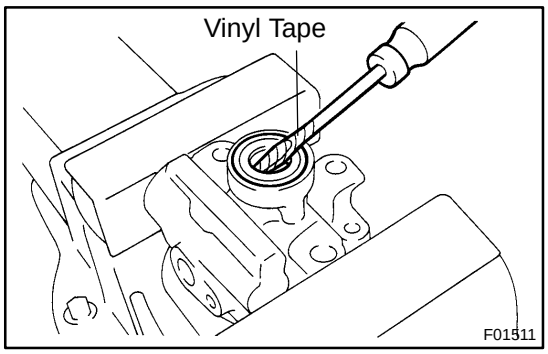

REPLACEMENT

NOTICE:

When using a vise, do not overtighten it.

IF NECESSARY, REPLACE OIL SEAL

(a) Using a screwdriver with vinyl tape wound around its tip, remove the oil seal.

NOTICE:

Be careful not to damage the front housing.

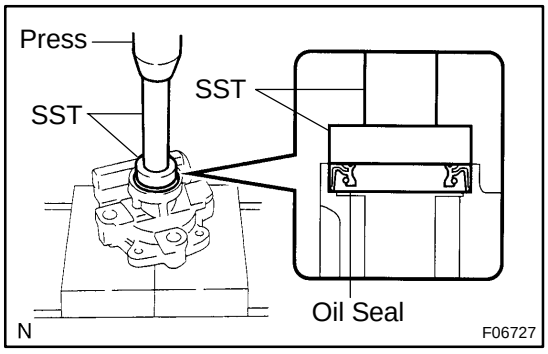

(b) Coat a new oil seal lip with power steering fluid.

(c) Using SST, press in the oil seal.

SST 09950−60010 (09951−00330),
09950−70010 (09951−07100)

NOTICE:

Make sure to install the oil seal in the correct direction.

STEERING COLUMN (Double Cab)

COMPONENTS

SR1KM−01

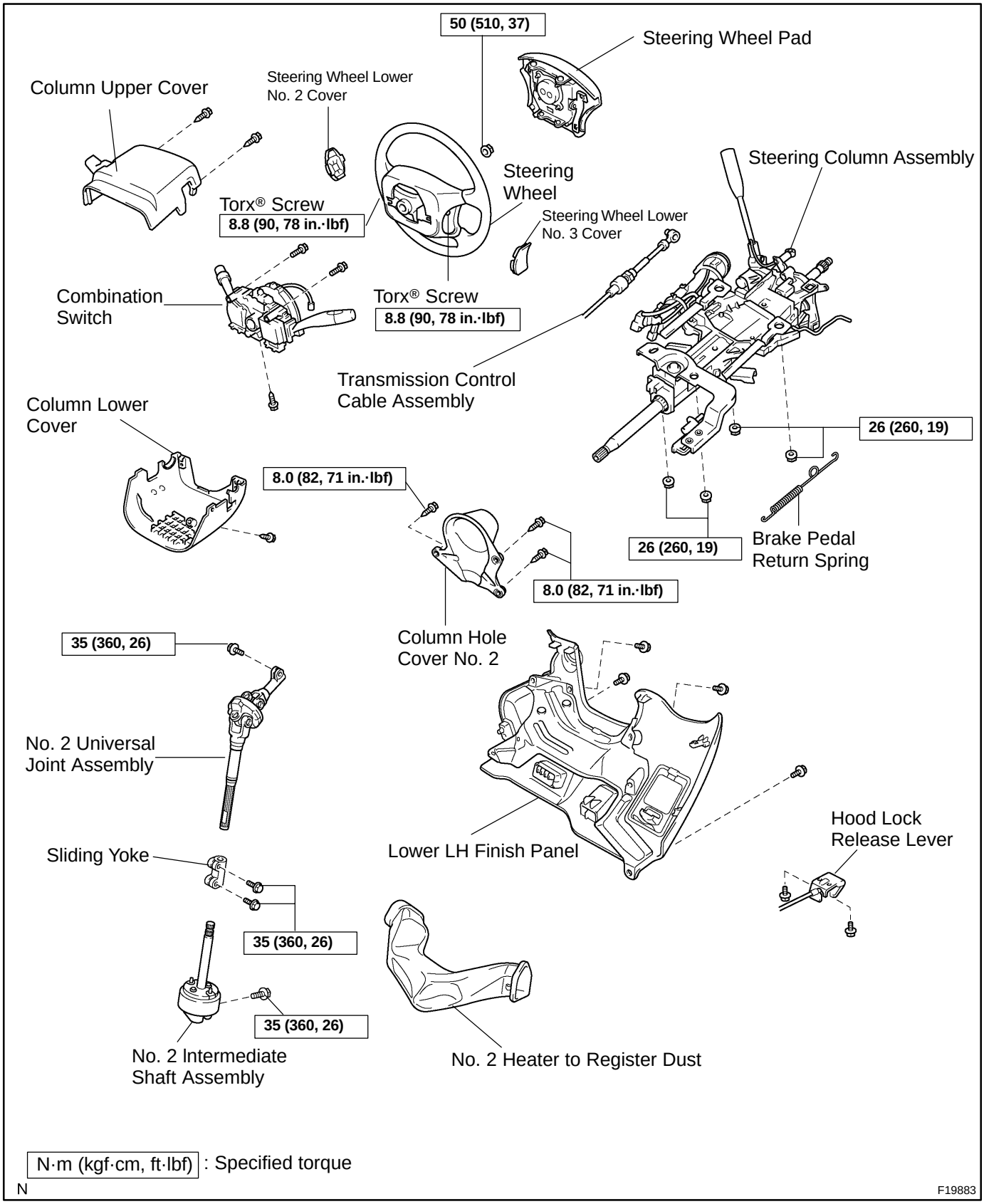

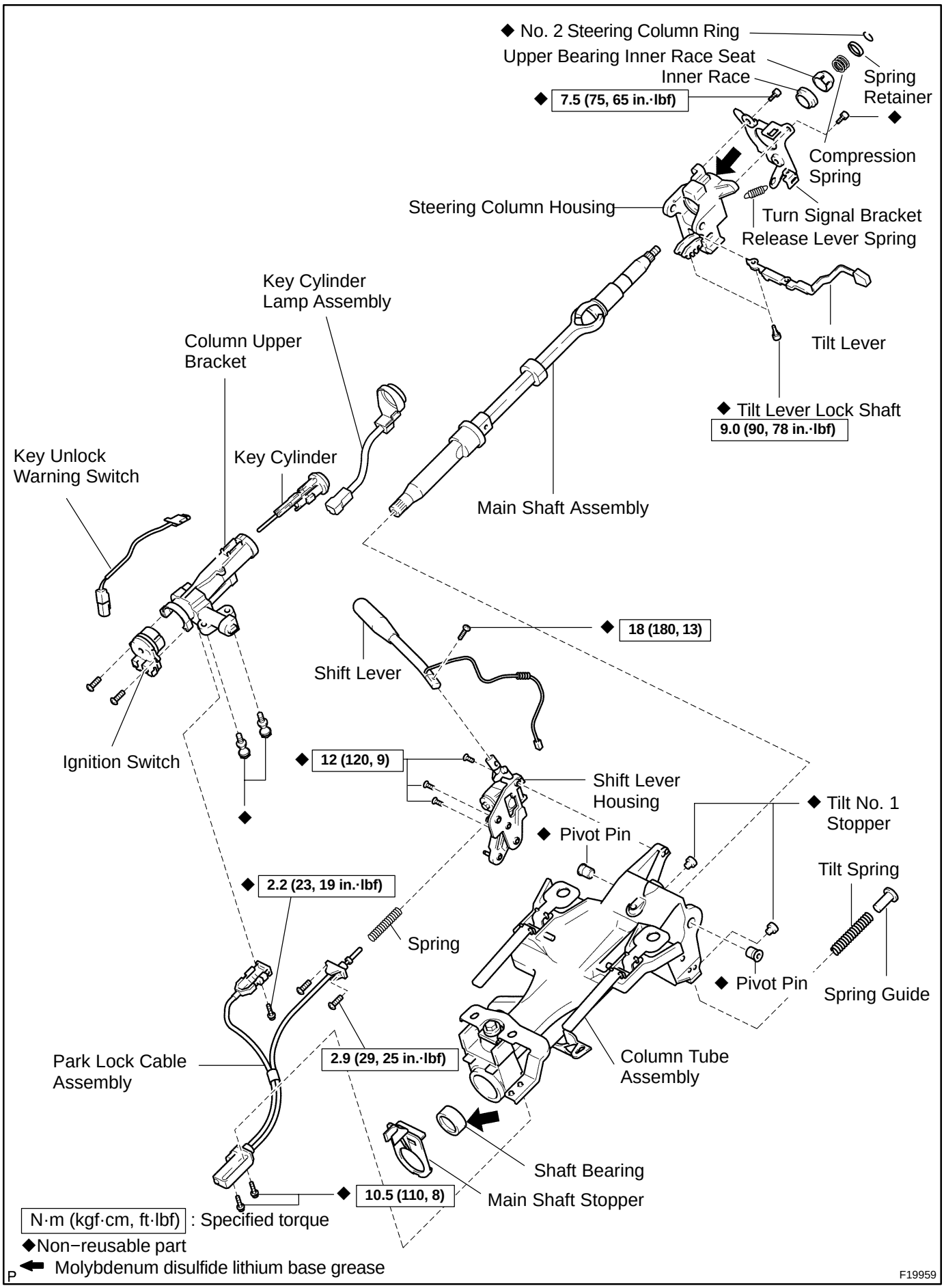
◆ No. 2 Steering Column Ring
Upper Bearing Inner Race Seat
Inner Race
Spring Retainer
◆ 7.5 (75, 65 in.·lbf)
◆
Compression Spring
Steering Column Housing
Turn Signal Bracket
Release Lever Spring
Key Cylinder Lamp Assembly
Column Upper Bracket
Tilt Lever
◆ Tilt Lever Lock Shaft
9.0 (90, 78 in.·lbf)
Key Unlock Warning Switch
Key Cylinder
Main Shaft Assembly
◆ 18 (180, 13)
Shift Lever
Ignition Switch
◆ 12 (120, 9)
Shift Lever Housing
◆ Tilt No. 1 Stopper
◆ Pivot Pin
Tilt Spring
◆ 2.2 (23, 19 in.·lbf)
Spring
◆ Pivot Pin
Spring Guide
Park Lock Cable Assembly
2.9 (29, 25 in.·lbf)
Column Tube Assembly
Shaft Bearing
Main Shaft Stopper
◆ 10.5 (110, 8)
N·m (kgf·cm, ft·lbf) : Specified torque
◆Non−reusable part
Molybdenum disulfide lithium base grease
P
F19959

SR1KO−01

DISASSEMBLY

NOTICE:

When using a vise, do not overtighten it.

1. REMOVE KEY CYLINDER LAMP ASSEMBLY

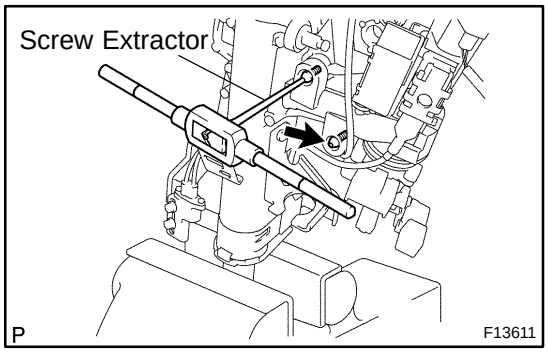

2. REMOVE COLUMN UPPER BRACKET

(a) Using a centering punch, mark the center of the 2 tapered−head bolts.

(b) Using a 3 to 4 mm (0.12 to 0.16 in.) drill, drill a hole into the 2 bolts.

(c) Using a screw extractor, remove the 2 bolts and column upper bracket.

3. REMOVE SHIFT LEVER

Using a torx® socket wrench, remove the torx® screw and shift lever.

4. REMOVE PARK LOCK CABLE ASSEMBLY

(See page AT−23)

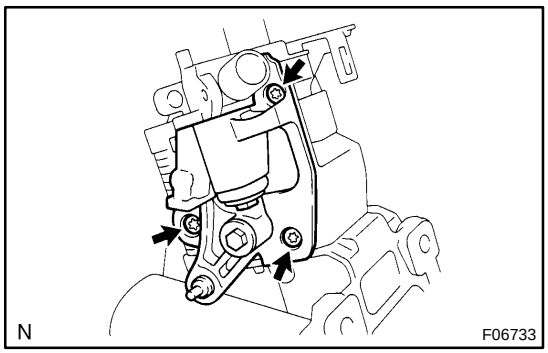

5. REMOVE SHIFT LEVER HOUSING

Using a torx® socket wrench, remove the 3 torx® screws and shift lever housing.

6. REMOVE RELEASE LEVER SPRING

7. REMOVE TURN SIGNAL BRACKET

Using a torx® socket wrench, remove the 2 torx® screws and turn signal bracket.

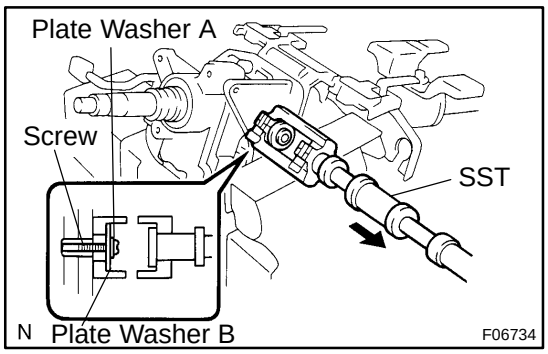

8. REMOVE STEERING COLUMN HOUSING WITH MAIN SHAFT ASSEMBLY

(a) Set SST, 2 plate washers (18 and 36 mm outer diameter) and a screw (4.0 mm diameter, 0.7 mm pitch, 15.0 mm length), as shown in the illustration. Then remove the 2 pivot pins.
SST 09910−00015 (09911−00011, 09912−00010)
Reference
Plate washer A (18 mm): 90562−04012
Plate washer B (36 mm): 90201−10201
Screw: 90154−40015

(b) Remove the column housing with the shaft assembly from the column tube assembly.

NOTICE:
Do not bend the universal joint of the main shaft assembly more than 15˚.

(c) Remove the tilt spring and spring guide.

9. REMOVE 2 TILT NO. 1 STOPPERS

10. REMOVE MAIN SHAFT STOPPER

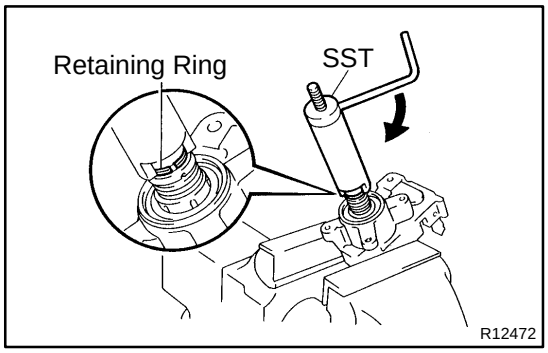

11. REMOVE MAIN SHAFT ASSEMBLY

(a) Install SST to the main shaft assembly, as shown in the illustration.
SST 09612−07010

(b) Using SST, compress the compression spring.
SST 09612−07010

NOTICE:
Do not bend the universal joint of the shaft assembly more than 15˚.

HINT:
Hold the shaft assembly with your hand to prevent rotation.

(c) Using a screwdriver, remove the No. 2 steering column ring.

(d) Remove the spring retainer, compression spring, upper bearing inner race seat and inner race.

12. REMOVE TILT LEVER

Remove the tilt lever lock shaft and shift lever.

SR1KP−01

INSPECTION

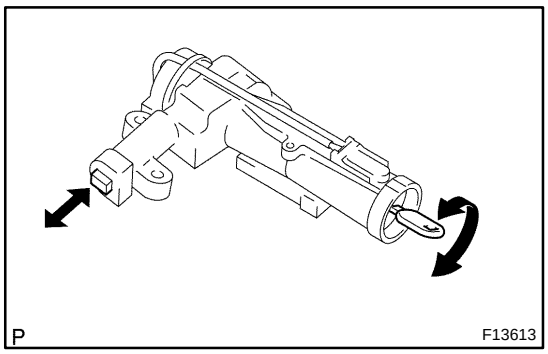

1. INSPECT STEERING LOCK OPERATION

Check that the steering lock mechanism operates properly.

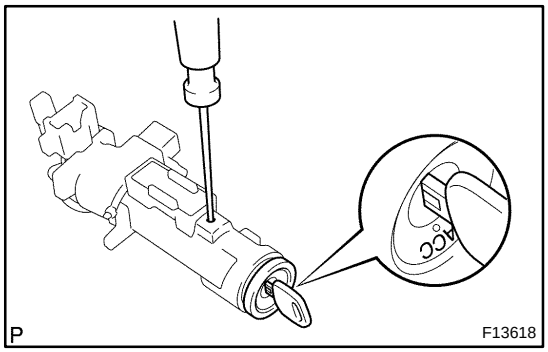

2. IF NECESSARY, REPLACE KEY CYLINDER

(a) Turn the ignition key to the ACC position.

(b) Push down the stop pin with a screwdriver, and pull out the cylinder.

(c) Install a new cylinder.

HINT:

Make sure that the key is in the ACC position.

3. INSPECT IGNITION SWITCH (See page BE−37)

4. IF NECESSARY, REPLACE IGNITION SWITCH

(a) Remove the 2 screws and ignition switch.

(b) Install a new ignition switch with the 2 screws.

5. INSPECT KEY UNLOCK WARNING SWITCH (See page BE−37)

6. IF NECESSARY, REPLACE KEY UNLOCK WARNING SWITCH

(a) Slide out the key unlock warning switch.

(b) Install a new key unlock warning switch.

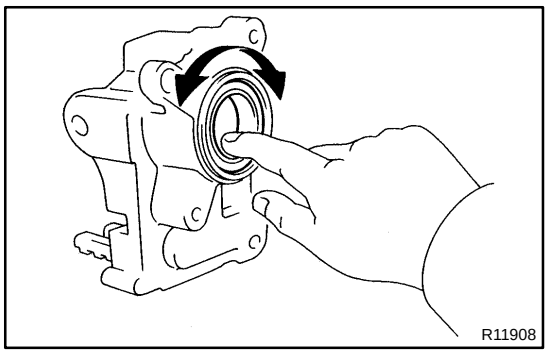

7. INSPECT BEARING

(a) Check that the bearing rotates smoothly without abnormal noise.

If it does not rotate smoothly or abnormal noise occurs, replace the column housing.

(b) Coat the bearing with molybdenum disulfide lithium base grease.

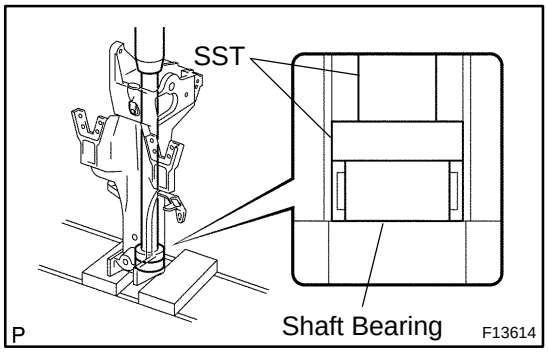

8. IF NECESSARY, REPLACE SHAFT BEARING

(a) Using SST and a press, press out the shaft bearing.

SST 09950−60010 (09951−00400), 09950−70010 (09951−07360)

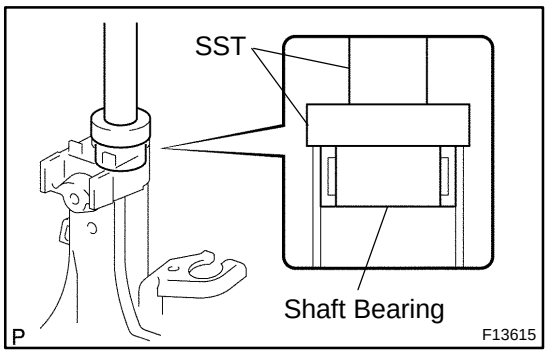

(b) Coat a new shaft bearing with molybdenum disulfide lithium base grease.

(c) Using SST and a press, press in the shaft bearing.
SST 09950−60010 (09951−00460),
09950−70010 (09951−07150)

SR1KR−01

INSTALLATION

NOTICE:

When replacing the steering angle sensor, drive the vehicle straight ahead at a speed of 6.5 mph (10.5 km/h) or more. Accordingly, zero point calibration of the steering angle sensor is performed.

HINT:

If the steering angle sensor zero point calibration is not performed, its value will be fixed. Check after driving the vehicle straight ahead at a speed of 6.5 mph (10.5 km/h) or more (See page DI−1548).

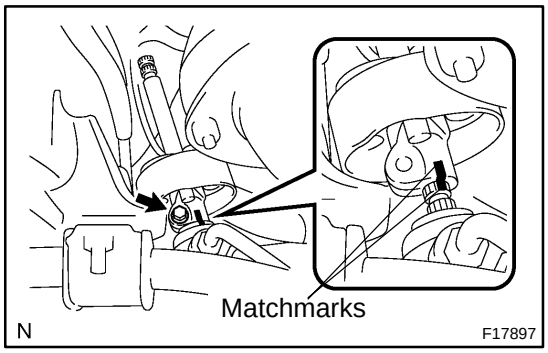

1. INSTALL NO. 2 INTERMEDIATE SHAFT ASSEMBLY

(a) Align the matchmark on the No. 2 intermediate shaft assembly with the one on the control valve shaft.

(b) Install the bolt.

Torque: 35 N·m (360 kgf·cm, 26 ft·lbf)

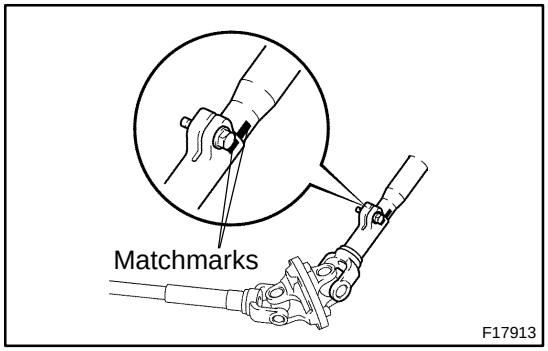

2. CONNECT NO. 2 UNIVERSAL JOINT ASSEMBLY

(a) Insert the column hole cover No. 2.

(b) Align the matchmarks on the column assembly and No. 2 universal joint assembly.

(c) Install the bolt.

Torque: 35 N·m (360 kgf·cm, 26 ft·lbf)

3. INSTALL STEERING COLUMN ASSEMBLY WITH NO. 2 UNIVERSAL JOINT ASSEMBLY

(a) Install the column assembly with the No. 2 universal joint assembly.

(b) Install the 4 steering column set nuts.

Torque: 26 N·m (260 kgf·cm, 19 ft·lbf)

(c) Connect the connectors.

4. CONNECT TRANSMISSION CONTROL CABLE ASSEMBLY

Connect the cable assembly to the shift lever assembly.

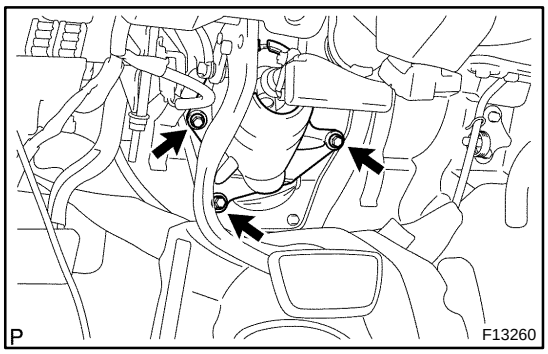

5. INSTALL COLUMN HOLE COVER NO. 2

Install the column hole cover No. 2 to the body with the 3 bolts.

Torque: 8.0 N·m (82 kgf·cm, 71 ft·lbf)

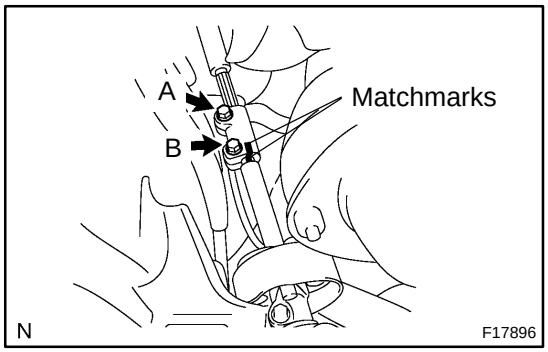

6. INSTALL SLIDING YOKE

(a) Align the matchmark on the sliding yoke with the one on the No. 2 intermediate shaft assembly.

(b) Install the ”B” bolt.

Torque: 35 N·m (360 kgf·cm, 26 ft·lbf)

(c) Install the ”A” bolt.

Torque: 35 N·m (360 kgf·cm, 26 ft·lbf)

7. INSTALL BRAKE PEDAL RETURN SPRING

8. INSTALL NO. 2 HEATER TO REGISTER DUCT

9. INSTALL LOWER LH FINISH PANEL

(a) Install the lower LH finish panel with the 4 bolts.

(b) Connect the hood lock release lever with the 2 screws.

10. INSTALL SPIRAL CABLE (See page BE−40)

11. INSTALL COMBINATION SWITCH WITH SPIRAL CABLE

(a) Install the combination switch with the 3 screws.

(b) Connect the airbag connector.

(c) Connect the 4 connectors.

12. INSTALL UPPER AND LOWER COLUMN COVERS

Install the upper and lower column covers with the 3 screws.

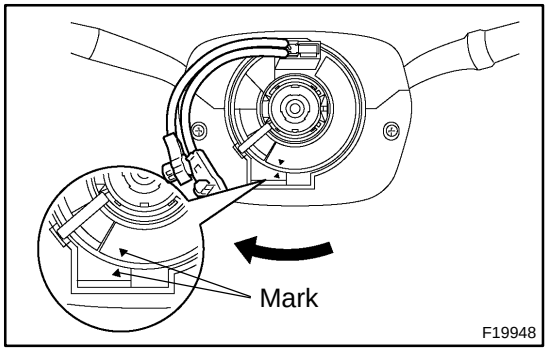

13. CENTER SPIRAL CABLE

(a) Check that the front wheels are facing straight ahead.

(b) Turn the cable counterclockwise by hand until it feels firm.

(c) Then rotate the cable clockwise about 2.5 turns to align the marks.

HINT:

The cable will rotate about 2.5 turns to both the left and right from the center.

14. INSTALL STEERING WHEEL

(a) Align the matchmarks on the wheel and main shaft.

(b) Install the wheel set nut.

Torque: 50 N·m (510 kgf·cm, 37 ft·lbf)

(c) Connect the connector.

15. INSTALL STEERING WHEEL PAD

NOTICE:

- **Never use airbag parts from another vehicle. When replacing parts, replace with new ones.**
- **Make sure the wheel pad is installed with the specified torque.**
- **If the wheel pad has been dropped, or there are cracks, dents or other defects on the case or connector, replace the wheel pad with a new one.**
- **When installing the wheel pad, take care that the wirings do not interfere with other parts and are not pinched between other parts.**
- **When installing torx® screws, take care not to scratch other parts (ex. cruise control switch, lower cover) with a torx® socket wrench.**

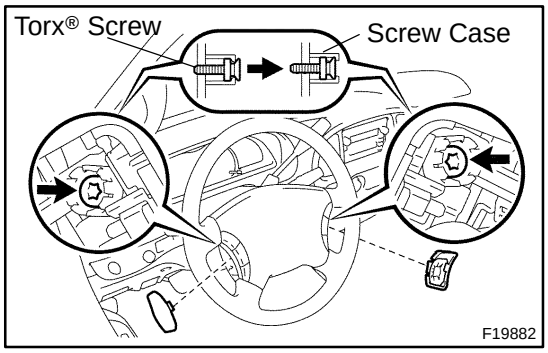

(a) Connect the airbag connectors and horn terminal.

(b) Install the wheel pad after confirming that the circumference groove of the torx® screw is caught on the screw case.

(c) Using a torx® socket wrench, tighten the 2 screws while holding down the upper surface of the wheel pad properly to prevent the wheel pad from floating up.

Torque: 8.8 N·m (90 kgf·cm, 78 in.·lbf)

(d) Install the steering wheel lower No. 2 cover.

(e) Install the steering wheel lower No. 3 cover.

16. CHECK STEERING WHEEL CENTER POINT

17. CONNECT CABLE TO NEGATIVE BATTERY TERMINAL

SR1KQ−01

REASSEMBLY

NOTICE:

When using a vise, do not overtighten it.

1. COAT PARTS INDICATED BY ARROWS WITH MOLYBDENUM DISULFIDE LITHIUM BASE GREASE (See page SR−31)

2. INSTALL TILT LEVER

Install the tilt lever with a new tilt lever lock shaft.

Torque: 9.0 N·m (90 kgf·cm, 78 in.·lbf)

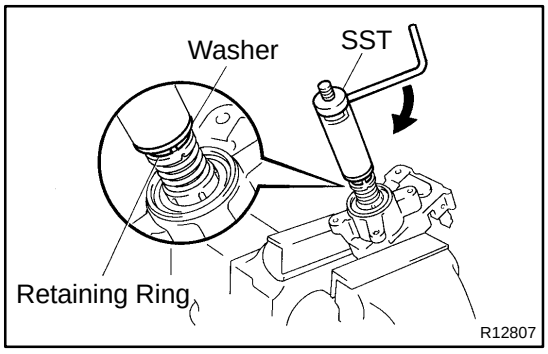

3. INSTALL MAIN SHAFT ASSEMBLY

(a) Install the inner race, upper bearing inner race seat, compression spring and spring retainer.

(b) Install a new No. 2 steering column ring to the main shaft assembly.

(c) Install the washer of SST on the main shaft assembly.
SST 09612−07010

(d) Set SST on the main shaft assembly, as shown in the illustration.
SST 09612−07010

(e) Using SST, push down the retaining ring until it fits into the shaft groove and install the main shaft assembly.

NOTICE:

Do not bend the universal joint of the shaft assembly more than 15°.

HINT:

Hold the main shaft assembly with your hand to prevent rotation.

4. INSTALL MAIN SHAFT STOPPER

5. INSTALL 2 NEW TILT NO. 1 STOPPERS

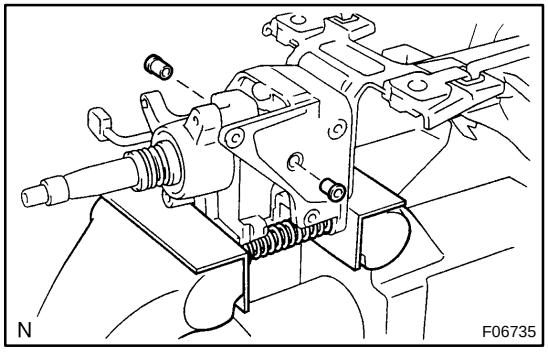

6. INSTALL STEERING COLUMN HOUSING WITH MAIN SHAFT ASSEMBLY

(a) Install the steering column housing with the main shaft assembly into the column tube assembly.

(b) Install the tilt spring and spring guide.

(c) Hold the steering column housing and steering column housing support in a vise.

(d) Temporarily install 2 new pivot pins.

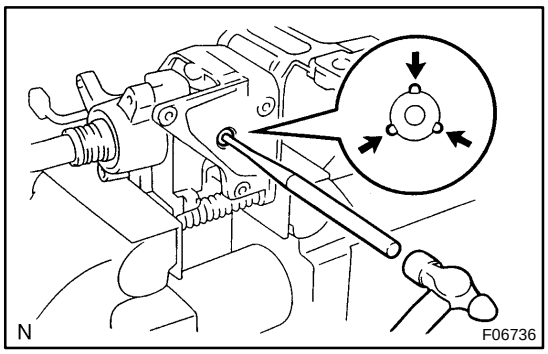

(e) Using a punch and a hammer, tap in the pivot pin.
(f) Using a pin punch and a hammer, stake at 3 places evenly around the hole as shown in the illustration.

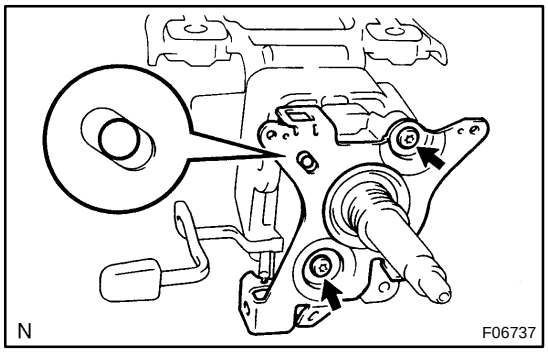

7. INSTALL TURN SIGNAL BRACKET

Using a torx® socket wrench, install the turn signal bracket with 2 new torx® screws.

Torque: 7.5 N·m (75 kgf·cm, 65 in.·lbf)

HINT:

Make sure that the protrusion on the steering column housing is fitted into the hole of the turn signal bracket.

8. INSTALL RELEASE LEVER SPRING

9. INSTALL SHIFT LEVER HOUSING

Using a torx® socket wrench, install the shift lever housing with 3 new torx® screws.

Torque: 12 N·m (120 kgf·cm, 9 ft·lbf)

10. INSTALL PARK LOCK CABLE ASSEMBLY (See page AT−24)

11. INSTALL SHIFT LEVER

Using a torx® socket wrench, install the shift lever with a new torx® screw.

Torque: 18 N·m (180 kgf·cm, 13 ft·lbf)

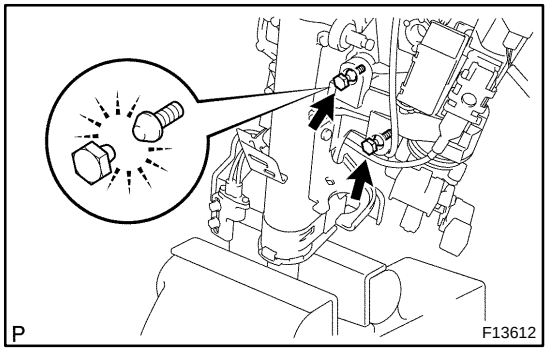

12. INSTALL COLUMN UPPER BRACKET

(a) Install the column upper bracket with 2 new tapered−head bolts.

HINT:

Insert the bracket pin into the column tube hole.

(b) Tighten the tapered−head bolts until the bolt heads break off.

13. INSTALL KEY CYLINDER LAMP ASSEMBLY

SR1KN−01

REMOVAL

1. DISCONNECT CABLE FROM NEGATIVE BATTERY TERMINAL

Wait for 90 seconds after disconnecting the cable to prevent the airbag working.

2. REMOVE STEERING WHEEL PAD

NOTICE:

If the airbag connector is disconnected with the ignition switch in the ON or ACC position, DTCs will be recorded.

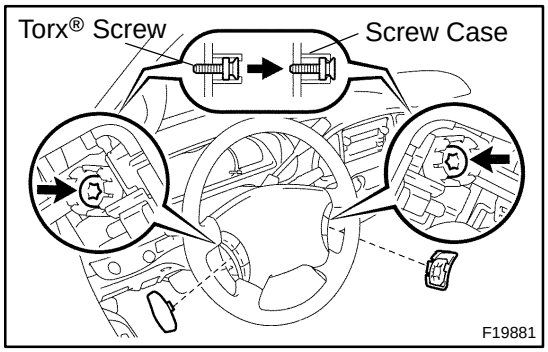

(a) Place the front wheels facing straight ahead.
(b) Remove the steering wheel lower No. 2 cover.
(c) Remove the steering wheel lower No. 3 cover.
(d) Using a torx® socket wrench, loosen the 2 torx® screws.

HINT:

Loosen each screw until the groove along the screw circumference is caught on the screw case.

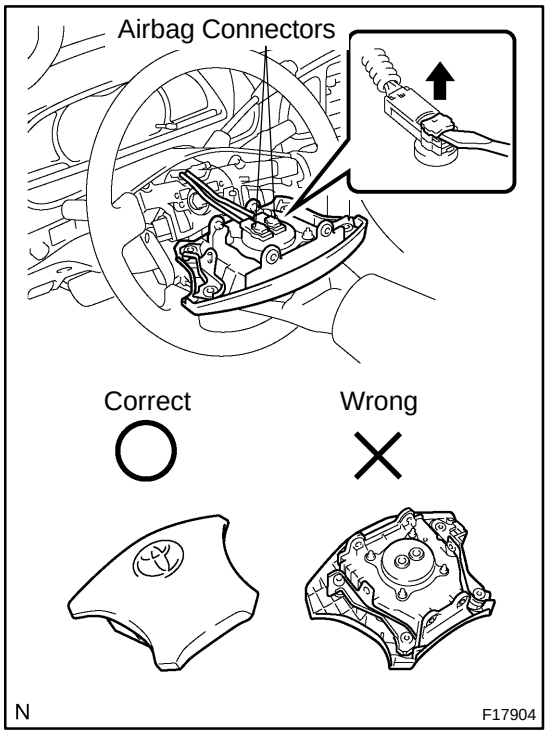

(e) Pull out the wheel pad from the steering wheel and disconnect the airbag connectors and horn terminal.

CAUTION:

- **When storing the wheel pad, keep the upper surface of the pad facing upward.**
- **Never disassemble the wheel pad.**

NOTICE:

When removing the wheel pad, take care not to pull the airbag wire harness.

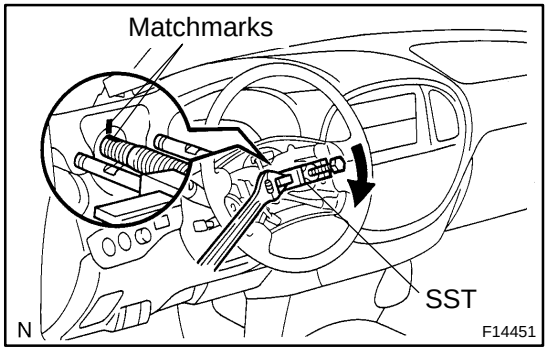

3. REMOVE STEERING WHEEL

(a) Remove the steering wheel set nut.
(b) Put matchmarks on the steering wheel and main shaft assembly.
(c) Using SST, remove the wheel.
SST 09950−50013 (09951−05010, 09952−05010, 09953−05020, 09954−05021)
(d) Disconnect the connector.

4. REMOVE UPPER AND LOWER COLUMN COVERS

Remove the 3 screws, upper and lower column covers.

5. REMOVE COMBINATION SWITCH WITH SPIRAL CABLE

(a) Disconnect the 4 connectors.
(b) Disconnect the airbag connector.
(c) Remove the 3 screws and combination switch.

6. REMOVE SPIRAL CABLE (See page BE−40)

NOTICE:

Do not disassemble the cable or apply oil to it.

7. REMOVE LOWER LH FINISH PANEL

(a) Remove the 2 screws and disconnect the hood lock release lever from the panel.
(b) Remove the 4 panel set bolts and lower LH finish panel.

8. REMOVE NO. 2 HEATER TO REGISTER DUCT

9. REMOVE BRAKE PEDAL RETURN SPRING

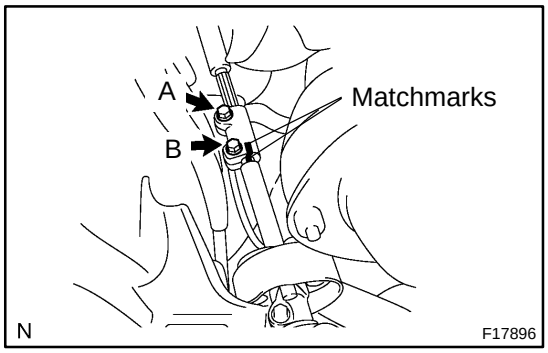

10. REMOVE SLIDING YOKE

(a) Put matchmarks on the sliding yoke and No. 2 intermediate shaft assembly.
(b) Remove the ”A” bolt.
(c) Remove the ”B” bolt.
(d) Slide the sliding yoke and remove it.

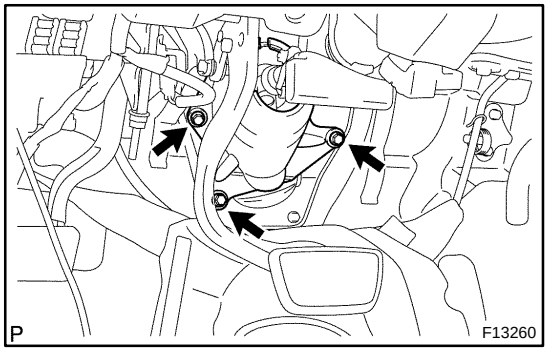

11. REMOVE COLUMN HOLE COVER NO. 2

Remove the 3 bolts and column hole cover No. 2.

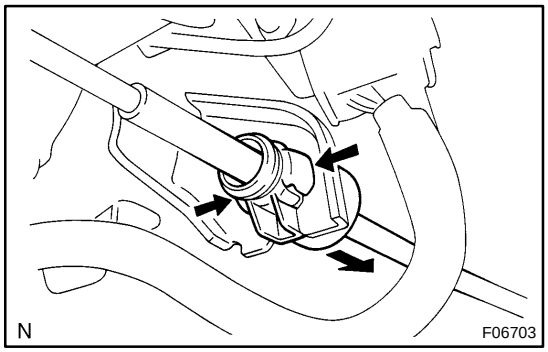

12. DISCONNECT TRANSMISSION CONTROL CABLE ASSEMBLY

Disconnect the cable assembly from the column shift lever assembly.

13. REMOVE STEERING COLUMN ASSEMBLY WITH NO. 2 UNIVERSAL JOINT ASSEMBLY

(a) Disconnect the connectors.
(b) Remove the 4 steering column set nuts.
(c) Pull out the steering column assembly with the No. 2 universal joint assembly.

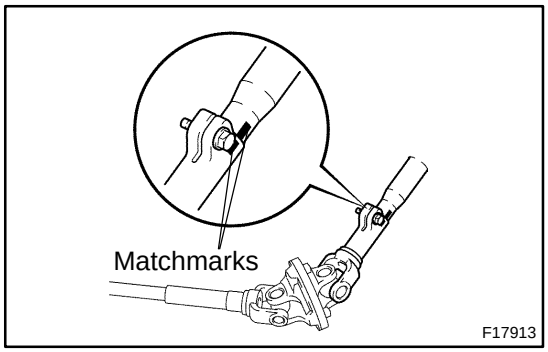

14. DISCONNECT NO. 2 UNIVERSAL JOINT ASSEMBLY

(a) Put matchmarks on the steering column assembly and No. 2 universal joint assembly.
(b) Remove the bolt and No. 2 universal joint assembly.

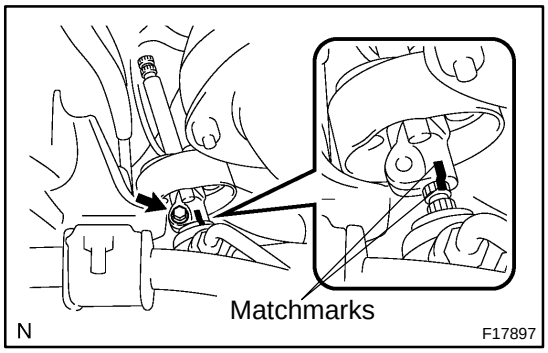

15. REMOVE NO. 2 INTERMEDIATE SHAFT ASSEMBLY

(a) Put matchmarks on the No. 2 intermediate shaft assembly and control valve shaft.
(b) Remove the bolt and No. 2 intermediate shaft assembly.

STEERING COLUMN (Standard Cab, Access Cab)

COMPONENTS

SR1KG−02

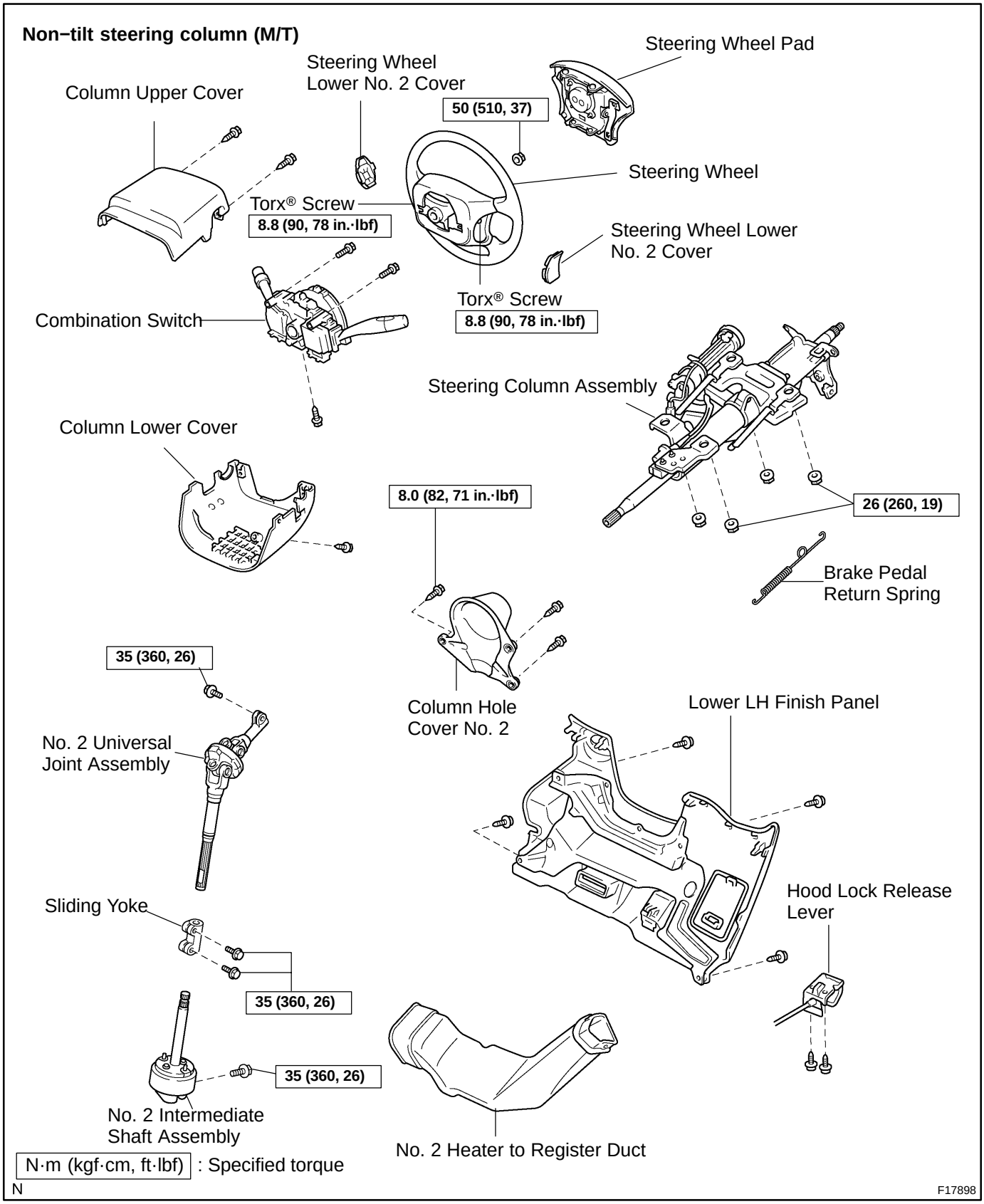

Non−tilt steering column (A/T)

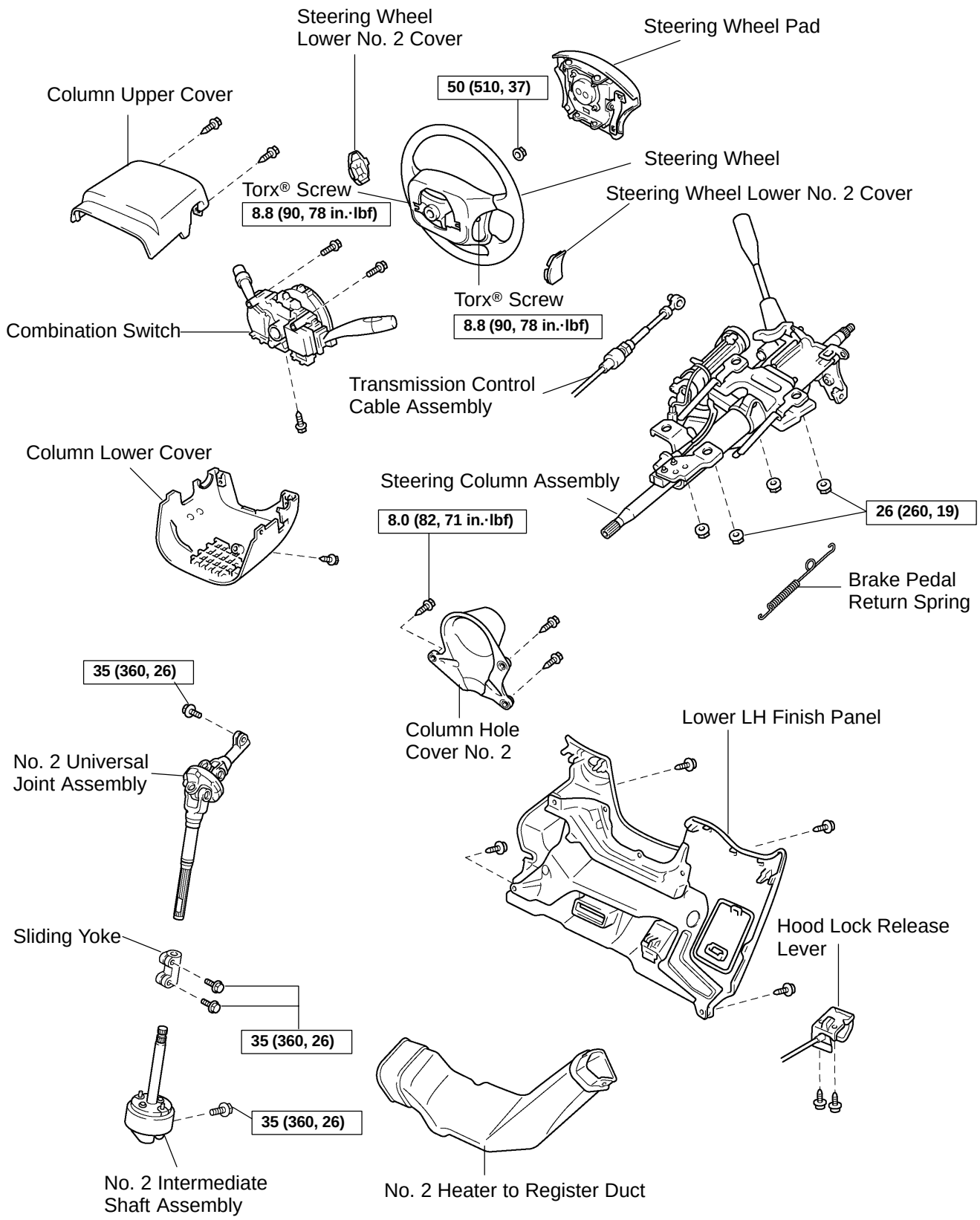

N·m (kgf·cm, ft·lbf) : Specified torque

N

F17899

Tilt steering column (M/T)

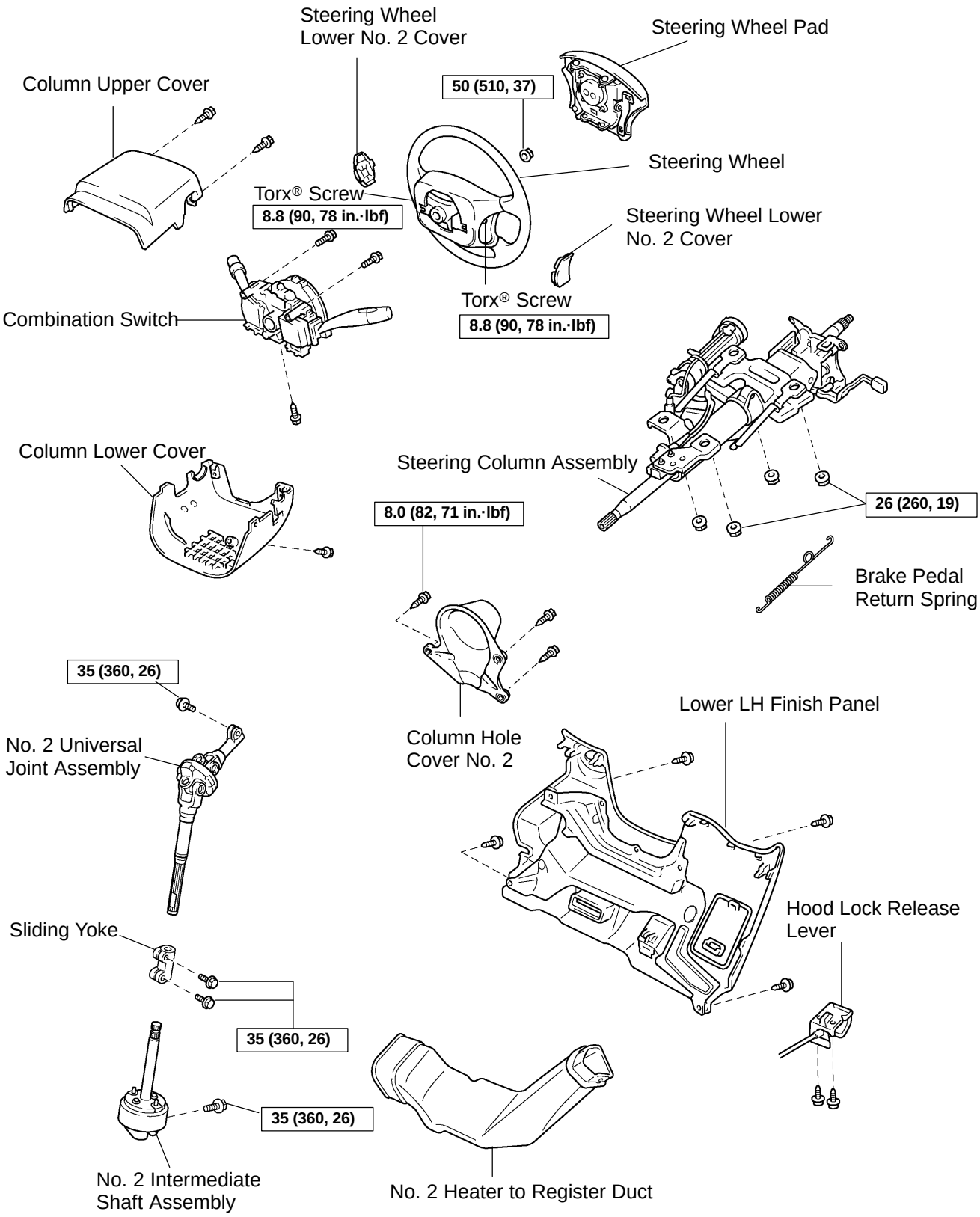

N·m (kgf·cm, ft·lbf) : Specified torque

N

F17900

Tilt steering column (A/T)

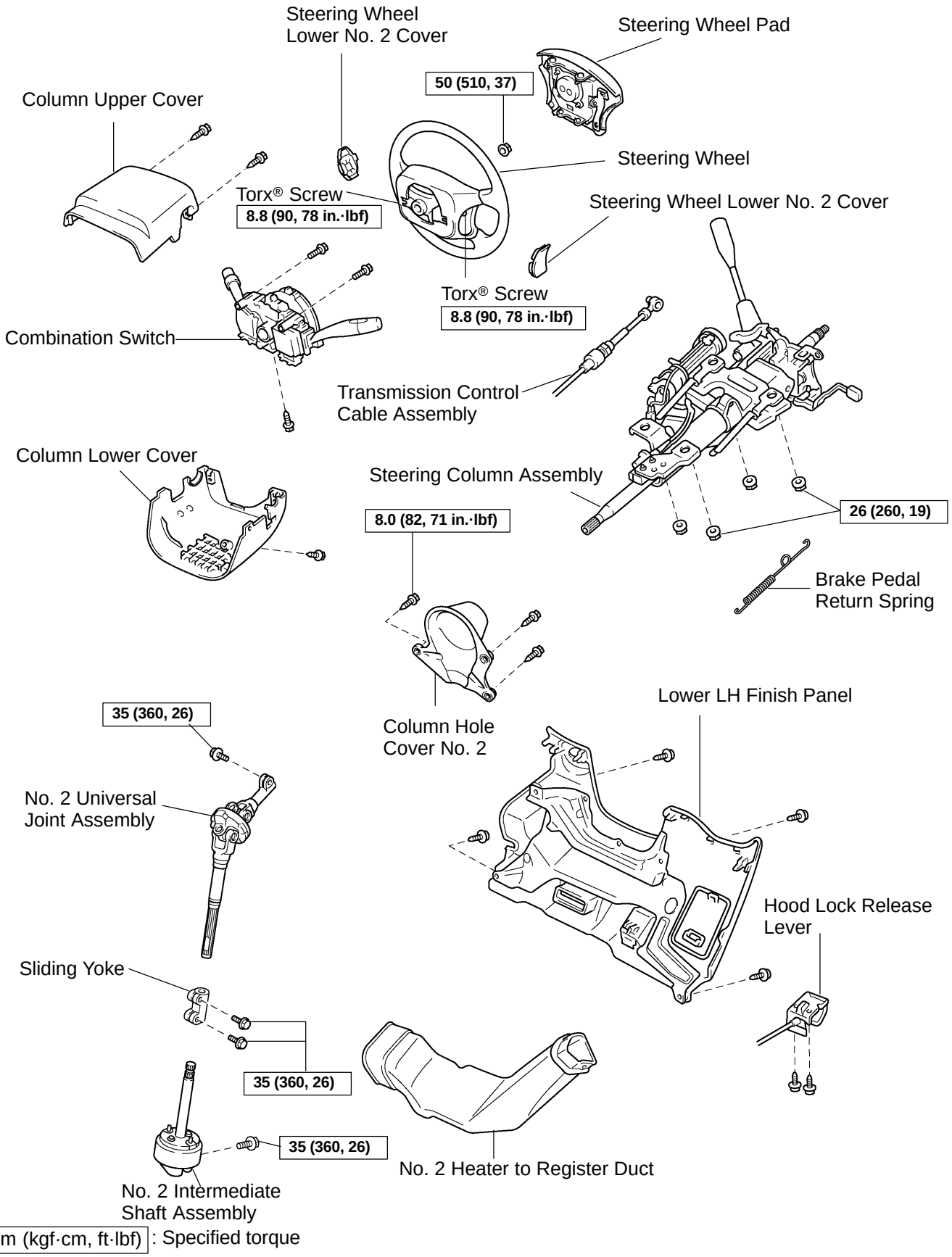

Non−tilt steering column

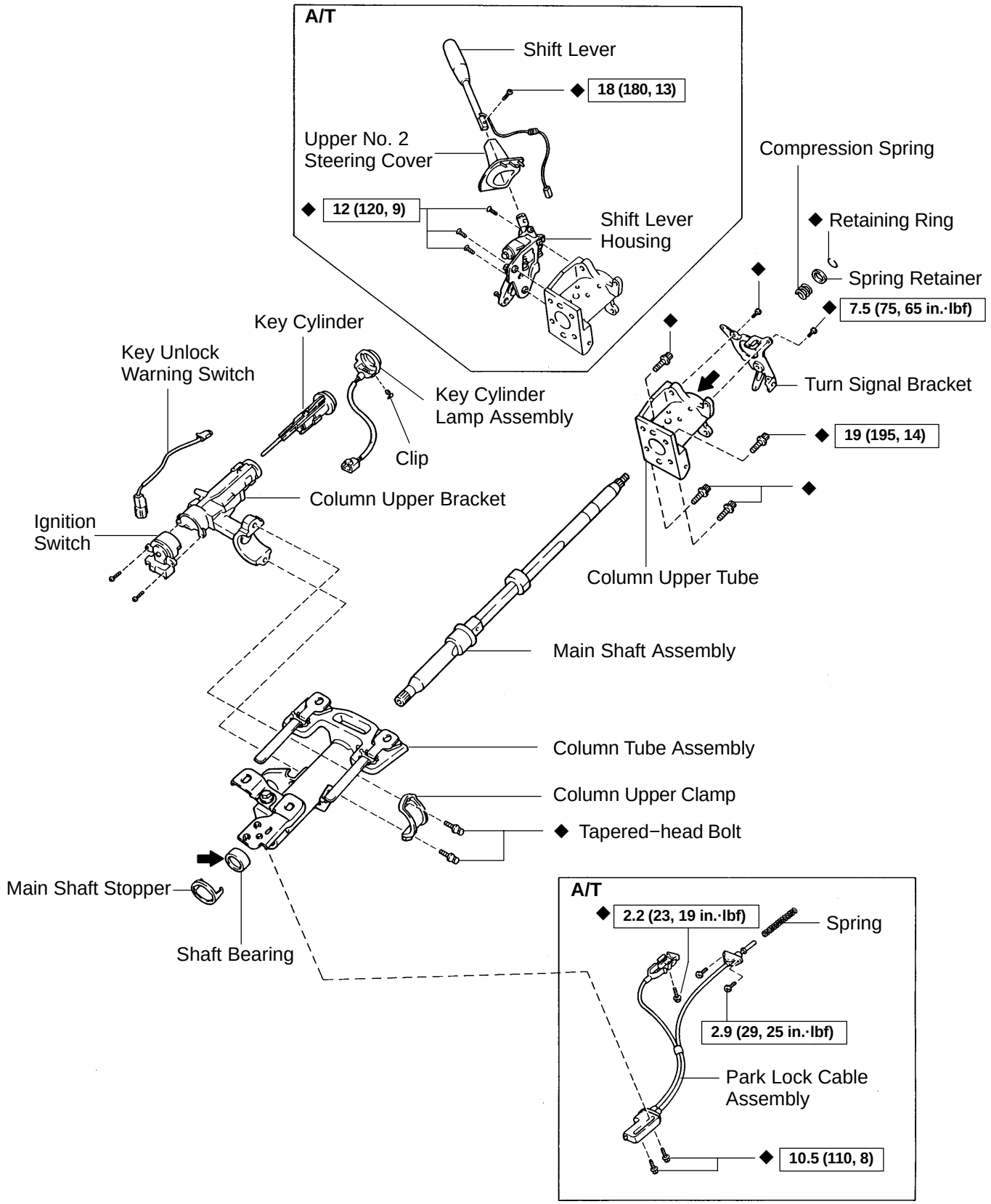

N·m (kgf·cm, ft·lbf) : Specified torque

◆Non−reusable part

N ⬅ Molybdenum disulfide lithium base grease

F14448

Tilt steering column

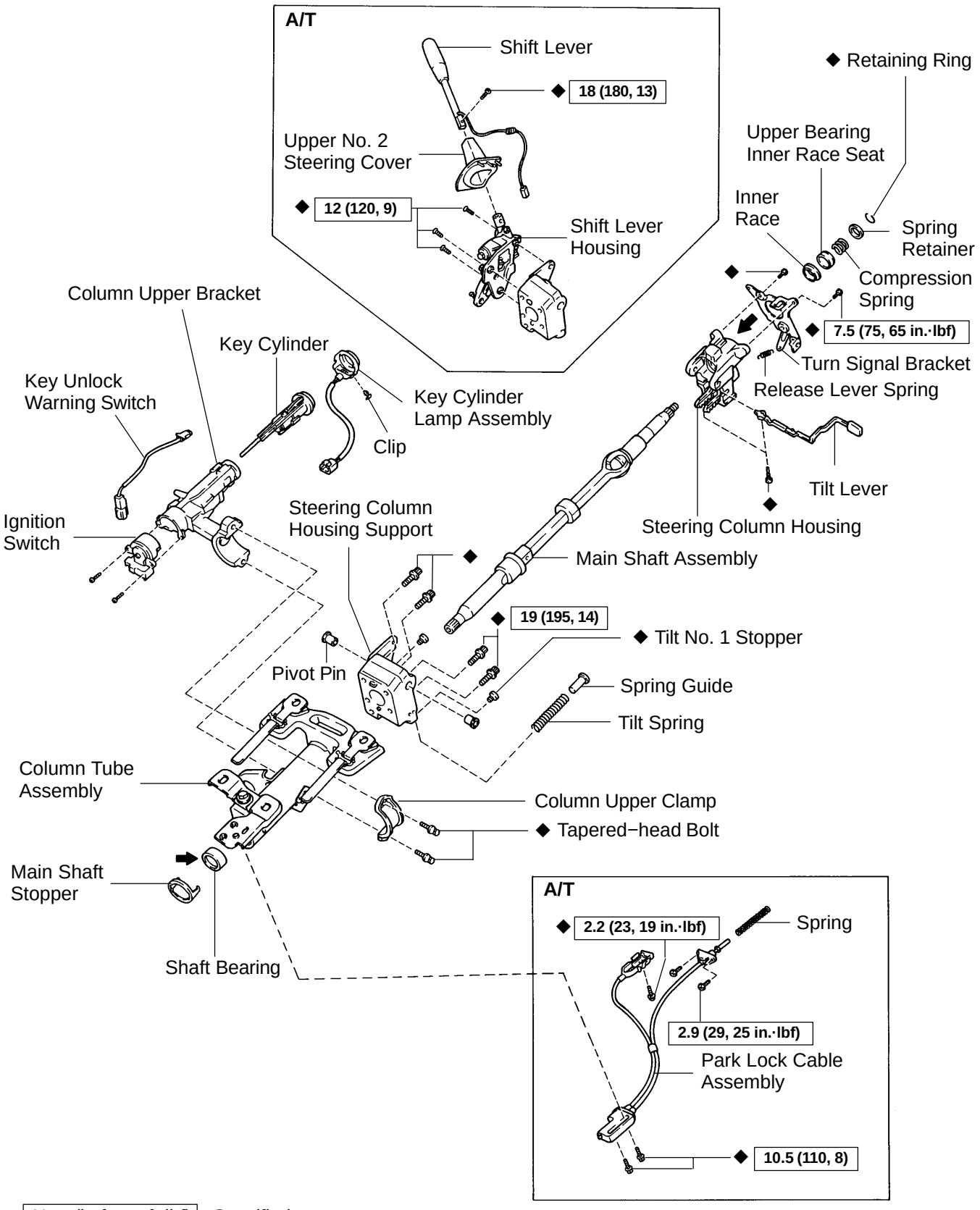

N·m (kgf·cm, ft·lbf) : Specified torque
◆Non−reusable part
⬅ Molybdenum disulfide lithium base grease

N

F14449

SR1KI−02

DISASSEMBLY

NOTICE:

When using a vise, do not overtighten it.

1. REMOVE KEY CYLINDER LAMP ASSEMBLY

Remove the clip and key cylinder lamp assembly.

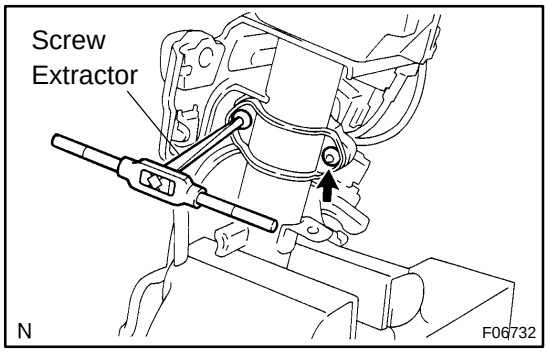

2. REMOVE COLUMN UPPER BRACKET AND COLUMN UPPER CLAMP

(a) Using a centering punch, mark the center of the 2 tapered−head bolts.

(b) Using a 3 to 4 mm (0.12 to 0.16 in.) drill, drill a hole into the 2 bolts.

(c) Using a screw extractor, remove the 2 bolts, column upper bracket and column upper clamp.

3. A/T:
REMOVE SHIFT LEVER

Remove the screw and shift lever.

4. A/T:
REMOVE UPPER NO. 2 STEERING COVER

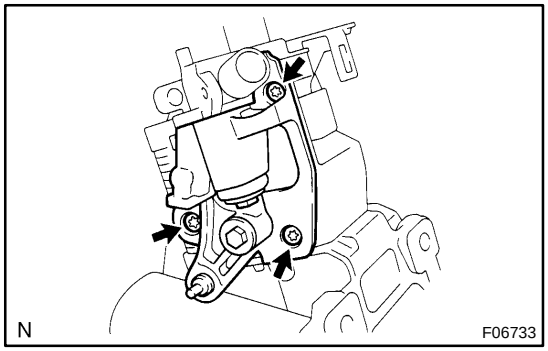

5. A/T:
REMOVE PARK LOCK CABLE ASSEMBLY
(See page AT−23)

6. A/T:
REMOVE SHIFT LEVER HOUSING

Remove the 3 torx® screws and shift lever housing.

7. Tilt steering column:
REMOVE RELEASE LEVER SPRING

8. REMOVE TURN SIGNAL BRACKET

Remove the 2 torx® screws and turn signal bracket.

9. Non−tilt steering column:
REMOVE COLUMN UPPER TUBE WITH MAIN SHAFT ASSEMBLY

(a) Remove the 4 torx® bolts.

(b) Remove the column upper tube with the main shaft assembly from the column tube assembly.

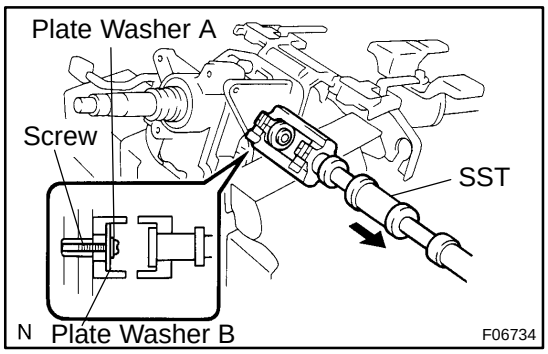

10. Tilt steering column:
REMOVE STEERING COLUMN HOUSING WITH MAIN SHAFT ASSEMBLY

(a) Set SST, 2 plate washers (18 and 36 mm outer diameter) and a screw (4.0 mm diameter, 0.7 mm pitch, 15.0 mm length), as shown in the illustration. Then remove the 2 pivot pins.
SST 09910−00015 (09911−00011, 09912−00010)
Reference
Plate washer A (18 mm): 90562−04012
Plate washer B (36 mm): 90201−10201
Screw: 90154−40015

(b) Remove the column housing with the shaft assembly from the column tube assembly.

NOTICE:
Do not bend the universal joint of the main shaft assembly more than 15°.

(c) Remove the tilt spring and spring guide.

11. Tilt steering column:
REMOVE STEERING COLUMN HOUSING SUPPORT

(a) Remove the 4 torx® bolts.

(b) Remove the 2 tilt No.1 stoppers and steering column housing support.

12. REMOVE MAIN SHAFT STOPPER

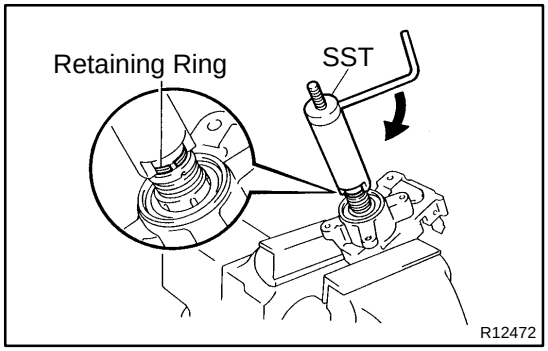

13. REMOVE MAIN SHAFT ASSEMBLY

(a) Install SST to the main shaft assembly, as shown in the illustration.
SST 09612−07010

(b) Using SST, compress the compression spring.

NOTICE:
Do not bend the universal joint of the shaft assembly more than 15°.

HINT:
Hold the shaft assembly with your hand to prevent rotation.

(c) Using a screwdriver, remove the retaining ring.

(d) Non−tilt steering column:
Remove the spring retainer and compression spring.

(e) Tilt steering column:
Remove the spring retainer, compression spring, upper bearing inner race seat and inner race.

SR1KJ−02

INSPECTION

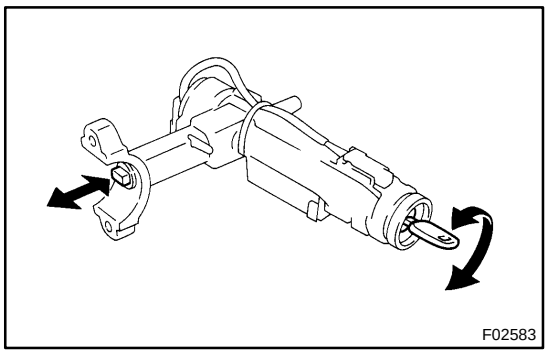
F02583

1. INSPECT STEERING LOCK OPERATION

Check that the steering lock mechanism operates properly.

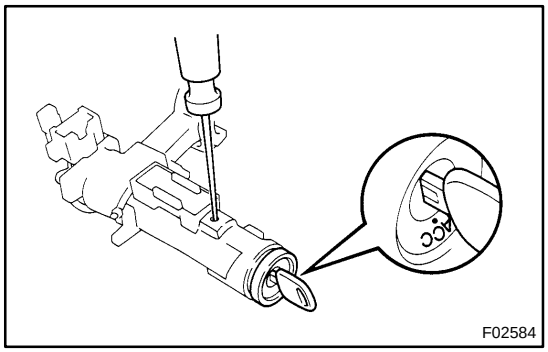

F02584

2. IF NECESSARY, REPLACE KEY CYLINDER

(a) Place the ignition key in the ACC position.

(b) Push down the stop pin with a screwdriver, and pull out the cylinder.

(c) Install a new cylinder.

HINT:

Make sure the key is in the ACC position.

3. INSPECT IGNITION SWITCH (See page BE−37)

4. IF NECESSARY, REPLACE IGNITION SWITCH

(a) Remove the 2 screws and ignition switch.

(b) Install a new ignition switch with the 2 screws.

5. INSPECT KEY UNLOCK WARNING SWITCH (See page BE−37)

6. IF NECESSARY, REPLACE KEY UNLOCK WARNING SWITCH

(a) Slide out the key unlock warning switch.

(b) Install a new key unlock warning switch.

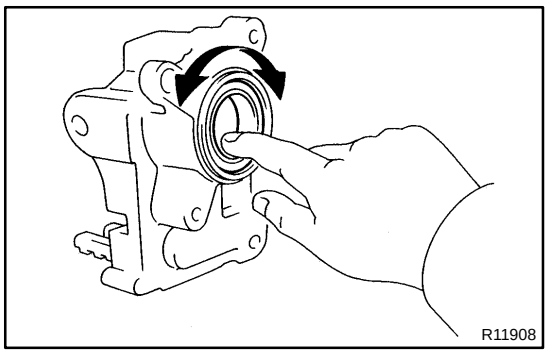
R11908

7. A/T:

INSPECT BEARING

(a) Check that the bearing rotates smoothly without abnormal noise.

If it does not rotate smoothly or abnormal noise occurs, replace the column housing.

(b) Coat the bearing with molybdenum disulfide lithium base grease.

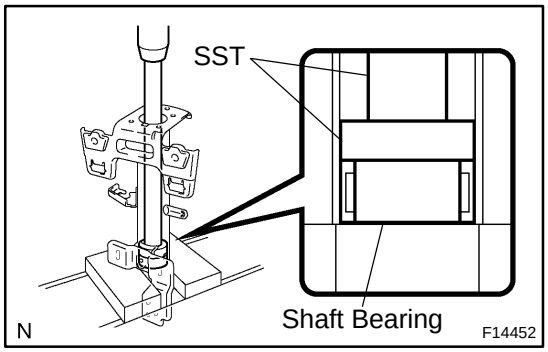

F14452

8. IF NECESSARY, REPLACE SHAFT BEARING

(a) Using SST and a press, press out the shaft bearing.

SST 09950−60010 (09951−00430),
09950−70010 (09951−07360)

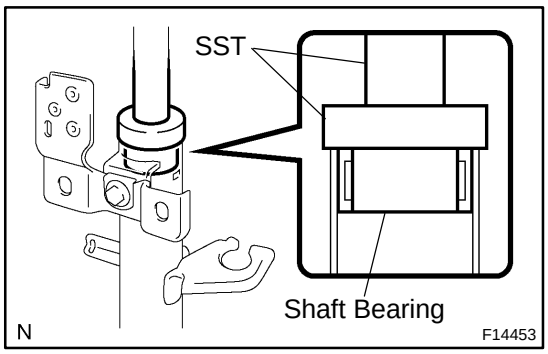

(b) Coat a new shaft bearing with molybdenum disulfide lithium base grease.

(c) Using SST and a press, press in the shaft bearing.
SST 09950−60010 (09951−00460),
09950−70010 (09951−07150)

SR1KL−02

INSTALLATION

NOTICE:

When replacing the steering angle sensor, drive the vehicle straight ahead at a speed of 6.5 mph (10.5 km/h) or more. Accordingly, zero point calibration of the steering angle sensor is performed.

HINT:

If the steering angle sensor zero point calibration is not performed, its value will be fixed. Check after driving the vehicle straight ahead at a speed of 6.5 mph (10.5 km/h) or more (See page DI−1548).

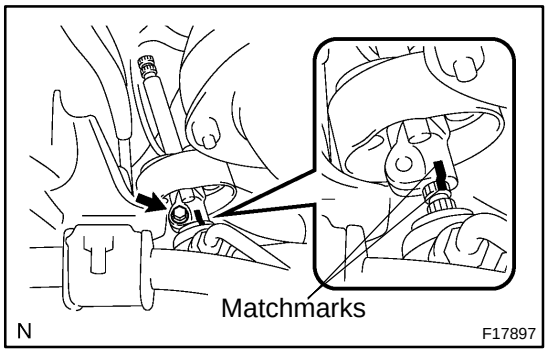

1. INSTALL NO. 2 INTERMEDIATE SHAFT ASSEMBLY

(a) Align the matchmark on the No. 2 intermediate shaft assembly with the one on the control valve shaft.

(b) Install the bolt.

Torque: 35 N·m (360 kgf·cm, 26 ft·lbf)

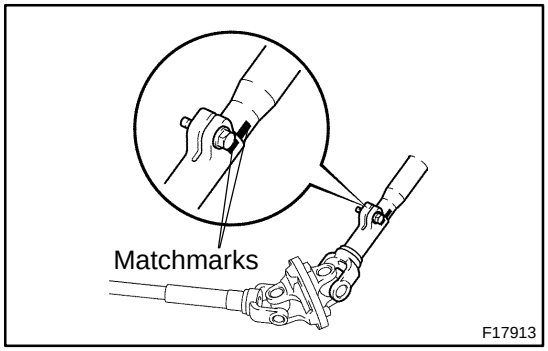

2. CONNECT NO. 2 UNIVERSAL JOINT ASSEMBLY

(a) Insert the column hole cover No. 2.

(b) Align the matchmarks on the column assembly and No. 2 universal joint assembly.

(c) Install the bolt.

Torque: 35 N·m (360 kgf·cm, 26 ft·lbf)

3. INSTALL STEERING COLUMN ASSEMBLY WITH NO. 2 UNIVERSAL JOINT ASSEMBLY

(a) Install the column assembly with the No. 2 universal joint assembly.

(b) Install the 4 steering column set nuts.

Torque: 26 N·m (260 kgf·cm, 19 ft·lbf)

(c) Connect the connectors.

4. A/T:

CONNECT TRANSMISSION CONTROL CABLE ASSEMBLY

Connect the cable assembly to the shift lever assembly.

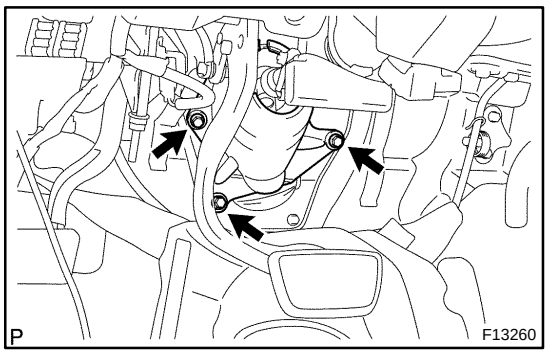

5. INSTALL COLUMN HOLE COVER NO. 2

Install the column hole cover No. 2 to the body with the 3 bolts.

Torque: 8.0 N·m (82 kgf·cm, 71 ft·lbf)

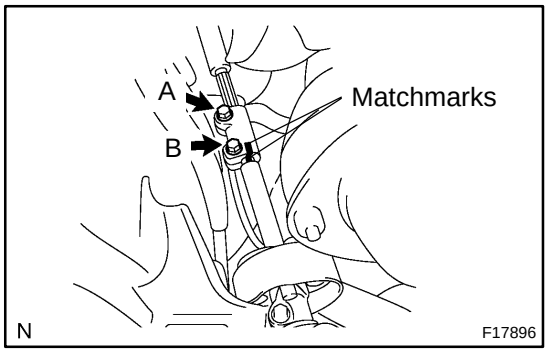

6. INSTALL SLIDING YOKE

(a) Align the matchmark on the sliding yoke with the one on the No. 2 intermediate shaft assembly.

(b) Install the ”B” bolt.

Torque: 35 N·m (360 kgf·cm, 26 ft·lbf)

(c) Install the ”A” bolt.

Torque: 35 N·m (360 kgf·cm, 26 ft·lbf)

7. INSTALL BRAKE PEDAL RETURN SPRING

8. INSTALL NO. 2 HEATER TO REGISTER DUCT

9. INSTALL LOWER LH FINISH PANEL

(a) Install the lower LH finish panel with the 4 bolts.

(b) Connect the hood lock release lever with the 2 screws.

10. INSTALL SPIRAL CABLE (See page BE−40)

11. INSTALL COMBINATION SWITCH WITH SPIRAL CABLE

(a) Install the combination switch with the 3 screws.

(b) Connect the airbag connector.

(c) M/T:

Connect the 3 connectors.

(d) A/T:

Connect the 4 connectors.

12. INSTALL UPPER AND LOWER COLUMN COVERS

Install the upper and lower column covers with the 3 screws.

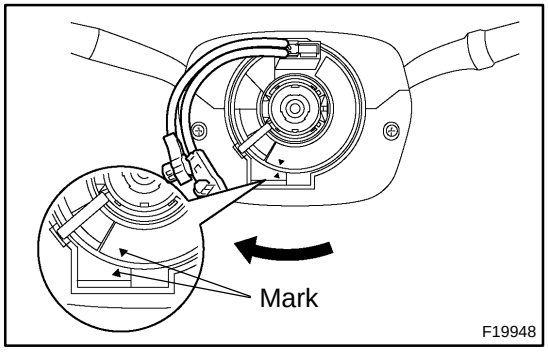

13. CENTER SPIRAL CABLE

(a) Check that the front wheels are facing straight ahead.

(b) Turn the cable counterclockwise by hand until it feels firm.

(c) Then rotate the cable clockwise about 2.5 turns to align the marks.

HINT:

The cable will rotate about 2.5 turns to both the left and right from the center.

14. INSTALL STEERING WHEEL

(a) Align the matchmarks on the wheel and main shaft.

(b) Install the wheel set nut.

Torque: 50 N·m (510 kgf·cm, 37 ft·lbf)

(c) Connect the connector.

15. INSTALL STEERING WHEEL PAD

NOTICE:

- **Never use airbag parts from another vehicle. When replacing parts, replace with new ones.**
- **Make sure the wheel pad is installed with the specified torque.**
- **If the wheel pad has been dropped, or there are cracks, dents or other defects on the case or connector, replace the wheel pad with a new one.**
- **When installing the wheel pad, take care that the wirings do not interfere with other parts and are not pinched between other parts.**
- **When installing torx® screws, take care not to scratch other parts (ex. cruise control switch, lower cover) with a torx® socket wrench.**

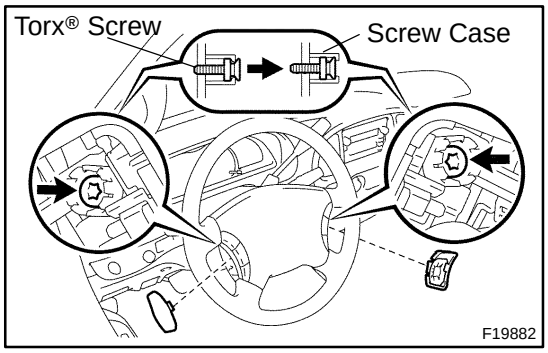

(a) Connect the airbag connectors and horn terminal.

(b) Install the wheel pad after confirming that the circumference groove of the torx® screw is caught on the screw case.

(c) Using a torx® socket wrench, tighten the 2 screws while holding down the upper surface of the wheel pad properly to prevent the wheel pad from floating up.

Torque: 8.8 N·m (90 kgf·cm, 78 in.·lbf)

(d) Install the steering wheel lower No. 2 cover.

(e) Install the steering wheel lower No. 3 cover.

16. CHECK STEERING WHEEL CENTER POINT

17. CONNECT CABLE TO NEGATIVE BATTERY TERMINAL

SR1KK−02

REASSEMBLY

NOTICE:

When using a vise, do not overtighten it.

1. COAT PARTS INDICATED BY ARROWS WITH MOLYBDENUM DISULFIDE LITHIUM BASE GREASE (See page SR−12)

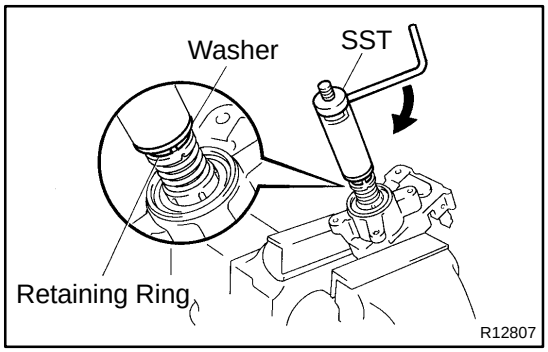

2. INSTALL MAIN SHAFT ASSEMBLY

(a) Non−tilt steering column:
Install the compression spring and spring retainer.

(b) Tilt steering column:
Install the inner race, upper bearing inner race seat, compression spring and spring retainer.

(c) Install a new retaining ring to the main shaft assembly.

(d) Install the washer of SST to the main shaft assembly.

(e) Set SST on the main shaft assembly, as shown in the illustration.
SST 09612−07010

(f) Using SST, push down the retaining ring until it fits into the shaft groove and install the main shaft assembly.

NOTICE:

Do not bend the universal joint of the shaft assembly more than 15˚.

HINT:

Hold the main shaft assembly with your hand to prevent rotation.

3. INSTALL MAIN SHAFT STOPPER

4. Tilt steering column:
INSTALL STEERING COLUMN HOUSING SUPPORT

(a) Install 2 new tilt No.1 stoppers and the steering column housing support.

(b) Install 4 new torx® bolts.
Torque: 19 N·m (195 kgf·cm, 14 ft·lbf)

5. Non−tilt steering column:
INSTALL COLUMN UPPER TUBE WITH MAIN SHAFT ASSEMBLY

(a) Install the column upper tube with the main shaft assembly to the column tube assembly.

(b) Install 4 new torx® bolts.
Torque: 19 N·m (195 kgf·cm, 14 ft·lbf)

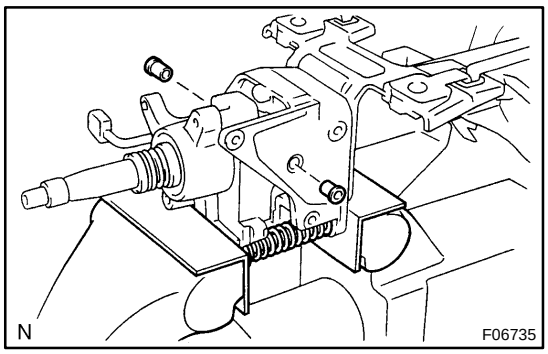

6. Tilt steering column:
INSTALL STEERING COLUMN HOUSING WITH MAIN SHAFT ASSEMBLY

(a) Install the steering column housing with the main shaft assembly into the column tube assembly.
(b) Install the tilt spring and spring guide.
(c) Hold the steering column housing and steering column housing support in a vise.
(d) Temporarily install 2 new pivot pins.

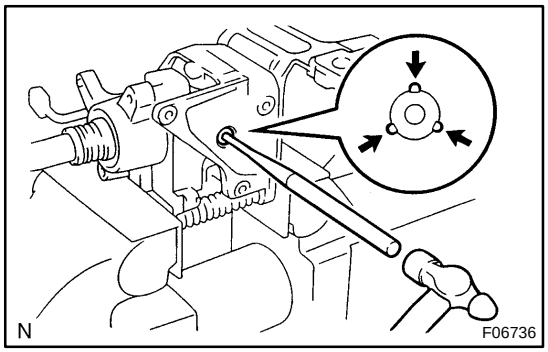

(e) Using a punch and a hammer, tap in the pivot pin.
(f) Using a pin punch and hammer, stake at 3 places evenly around the hole as shown in the illustration.

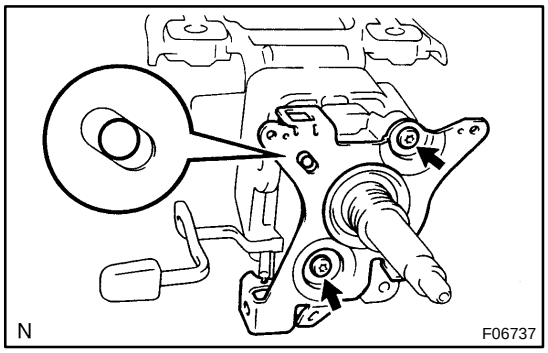

7. INSTALL TURN SIGNAL BRACKET

Install the turn signal bracket with 2 new torx® screws.

Torque: 7.5 N·m (75 kgf·cm, 65 in.·lbf)

HINT:

Make sure that the protrusion on the steering column housing is fitted into the hole of the turn signal bracket.

8. Tilt steering column:
INSTALL RELEASE LEVER SPRING

9. A/T:
INSTALL PARK LOCK CABLE ASSEMBLY (See page AT−24)

10. A/T:
INSTALL SHIFT LEVER HOUSING

Install the shift lever housing with 3 new torx® screws.

Torque: 12 N·m (120 kgf·cm, 9 ft·lbf)

11. A/T:
INSTALL UPPER NO. 2 STEERING COVER

12. A/T:
INSTALL SHIFT LEVER

Install the shift lever with a new torx® screw.

Torque: 18 N·m (180 kgf·cm, 13 ft·lbf)

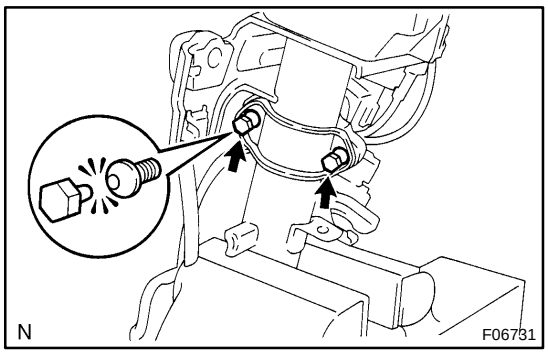

13. INSTALL COLUMN UPPER BRACKET AND COLUMN UPPER CLAMP

(a) Install the column upper bracket and column upper clamp with 2 new tapered−head bolts.

HINT:

Insert the bracket pin into the column tube hole.

(b) Tighten the tapered−head bolts until the bolt heads break off.

14. INSTALL KEY CYLINDER LAMP ASSEMBLY

Install the key cylinder lamp assembly with the clip.

SR1KH−01

REMOVAL

1. DISCONNECT CABLE FROM NEGATIVE BATTERY TERMINAL

Wait for 90 seconds after disconnecting the cable to prevent the airbag working.

2. REMOVE STEERING WHEEL PAD

NOTICE:

If the airbag connector is disconnected with the ignition switch in the ON or ACC position, DTCs will be recorded.

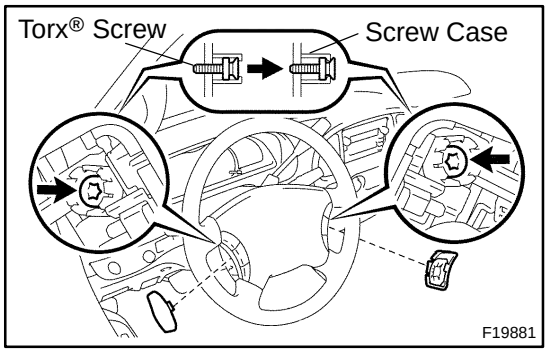

(a) Place the front wheels facing straight ahead.
(b) Remove the steering wheel lower No. 2 cover.
(c) Remove the steering wheel lower No. 3 cover.
(d) Using a torx® socket wrench, loosen the 2 torx® screws.

HINT:

Loosen each screw until the groove along the screw circumference is caught on the screw case.

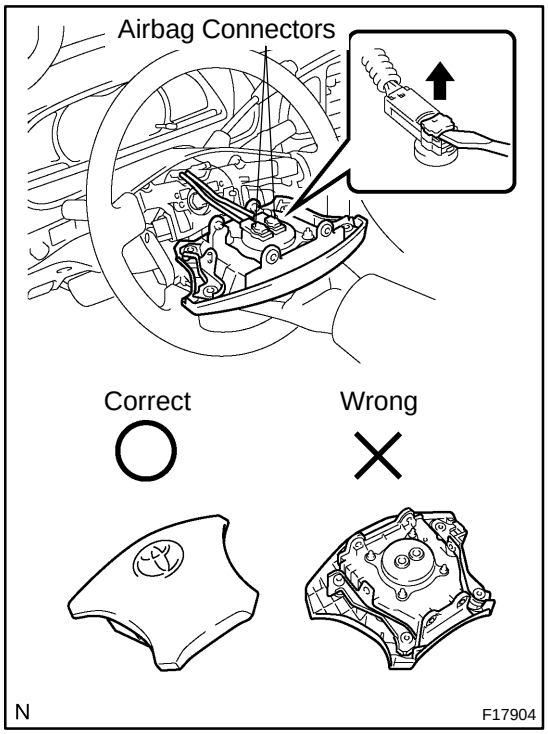

(e) Pull out the wheel pad from the steering wheel and disconnect the airbag connectors and horn terminal.

CAUTION:

- **When storing the wheel pad, keep the upper surface of the pad facing upward.**
- **Never disassemble the wheel pad.**

NOTICE:

When removing the wheel pad, take care not to pull on the airbag wire harness.

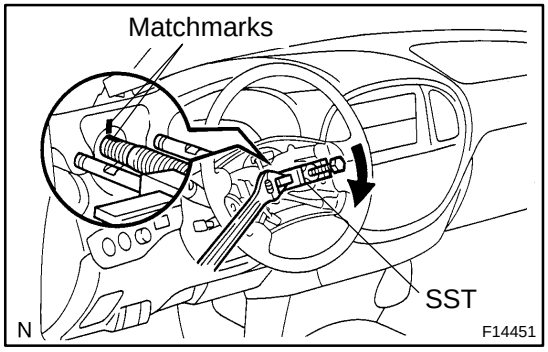

3. REMOVE STEERING WHEEL

(a) Remove the steering wheel set nut.
(b) Put matchmarks on the steering wheel and main shaft assembly.
(c) Using SST, remove the wheel.
SST 09950−50013 (09951−05010, 09952−05010, 09953−05020, 09954−05021)
(d) Disconnect the connector.

4. REMOVE UPPER AND LOWER COLUMN COVERS

Remove the 3 screws, upper and lower column covers.

5. REMOVE COMBINATION SWITCH WITH SPIRAL CABLE

(a) M/T:
Disconnect the 3 connectors.

(b) A/T:
Disconnect the 4 connectors.

(c) Disconnect the airbag connector.

(d) Remove the 3 screws and combination switch.

6. REMOVE SPIRAL CABLE (See page BE−40)

NOTICE:

Do not disassemble the cable or apply oil to it.

7. REMOVE LOWER LH FINISH PANEL

(a) Remove the 2 screws and disconnect the hood lock release lever from the panel.

(b) Remove the 4 panel set bolts and lower LH finish panel.

8. REMOVE NO. 2 HEATER TO REGISTER DUCT

9. REMOVE BRAKE PEDAL RETURN SPRING

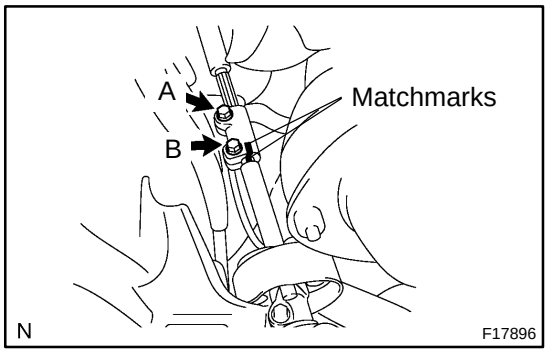

10. REMOVE SLIDING YOKE

(a) Put matchmarks on the sliding yoke and No. 2 intermediate shaft assembly.

(b) Remove the ”A” bolt.

(c) Remove the ”B” bolt.

(d) Slide the sliding yoke and remove it.

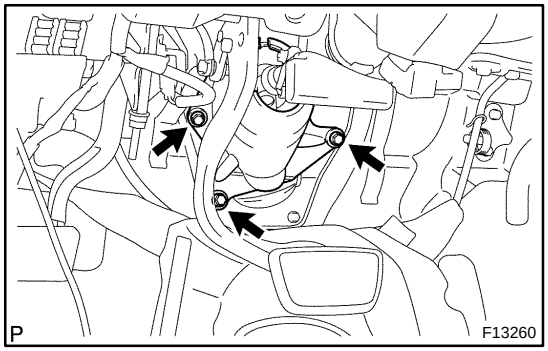

11. REMOVE COLUMN HOLE COVER NO. 2

Remove the 3 bolts and column hole cover No. 2.

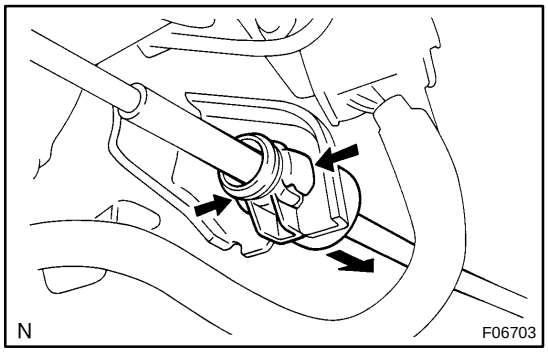

12. A/T:
DISCONNECT TRANSMISSION CONTROL CABLE ASSEMBLY

Disconnect the cable assembly from the column shift lever assembly.

13. REMOVE STEERING COLUMN ASSEMBLY WITH NO. 2 UNIVERSAL JOINT ASSEMBLY

(a) Disconnect the connectors.
(b) Remove the 4 steering column set nuts.
(c) Pull out the steering column assembly with the No. 2 universal joint assembly.

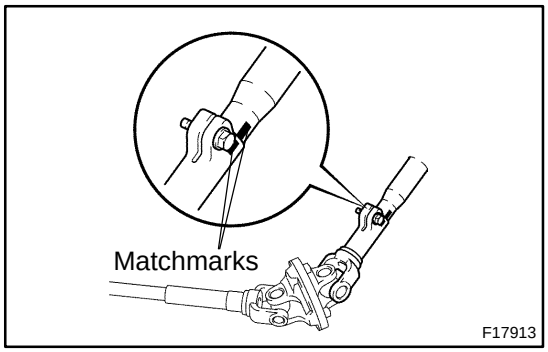

14. DISCONNECT NO. 2 UNIVERSAL JOINT ASSEMBLY

(a) Put matchmarks on the steering column assembly and No. 2 universal joint assembly.
(b) Remove the bolt and No. 2 universal joint assembly.

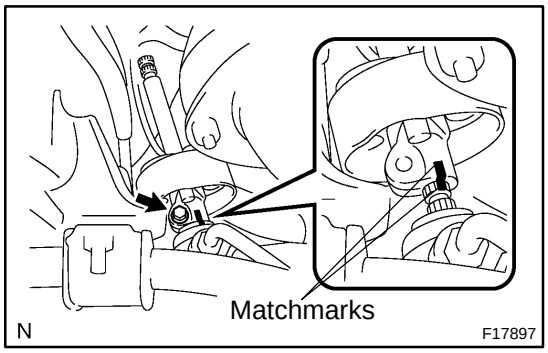

15. REMOVE NO. 2 INTERMEDIATE SHAFT ASSEMBLY

(a) Put matchmarks on the No. 2 intermediate shaft assembly and control valve shaft.
(b) Remove the bolt and No. 2 intermediate shaft assembly.

STEERING SYSTEM

PRECAUTION

SR01S−07

- **Care must be taken to replace parts properly because they could affect the performance of the steering system and result in a driving hazard.**
- **The TOYOTA TUNDRA is equipped with an SRS (Supplemental Restraint System) such as the driver airbag and front passenger airbag. Failure to carry out service operation in the correct sequence could cause the SRS to unexpectedly deploy during servicing, possibly leading to a serious accident. Before servicing (including removal or installation of parts, inspection or replacement), be sure to read the precautionary notices in the RS section.**
- **When replacing the steering angle sensor, drive the vehicle straight ahead at a speed of 6.5 mph (10.5 km/h) or more. Accordingly, zero point calibration of the steering angle sensor is performed.**
- **After performing ”Front wheel alignment adjustment”, clearing and reading the yaw rate & deceleration sensor zero point calibration data is necessary (See page DI−1474).**

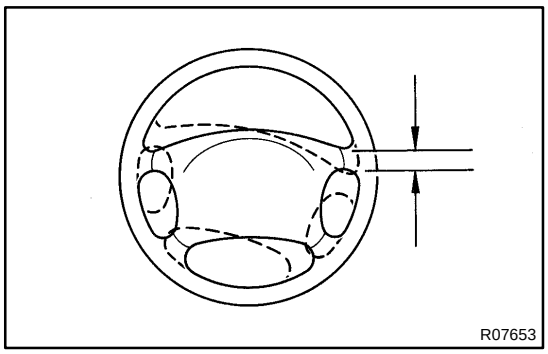

STEERING WHEEL

SR01Y−13

INSPECTION

1. CHECK STEERING WHEEL FREE PLAY

(a) Stop the vehicle and face the tires straight ahead.

(b) Gently rock the steering wheel up and down with a finger, and check the steering wheel free play.

Maximum free play: 30 mm (1.18 in.)

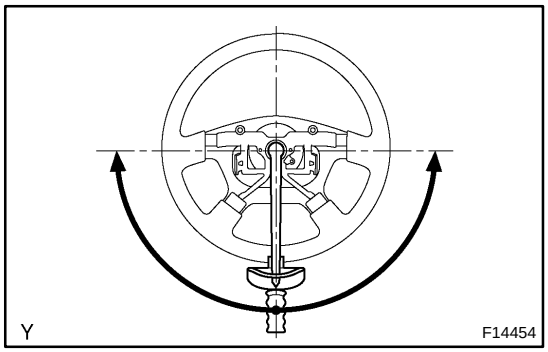

2. CHECK STEERING EFFORT

(a) Center the steering wheel.

(b) Remove the steering wheel pad
(See page SR−18, SR−33).

(c) Start the engine and run at idle.

(d) Measure the steering effort in both directions.

Steering effort (Reference):
4.9 N·m (50 kgf·cm, 43 in.·lbf)

HINT:
Check tire type, pressure and contact surface before making your diagnosis.

(e) Tighten the steering wheel set nut.

Torque: 50 N·m (510 kgf·cm, 37 ft·lbf)

(f) Install the steering wheel pad
(See page SR−28, SR−42).

SR1HN−03

REPAIR PROCEDURES

HINT:
This is the repair procedure for steering off center.

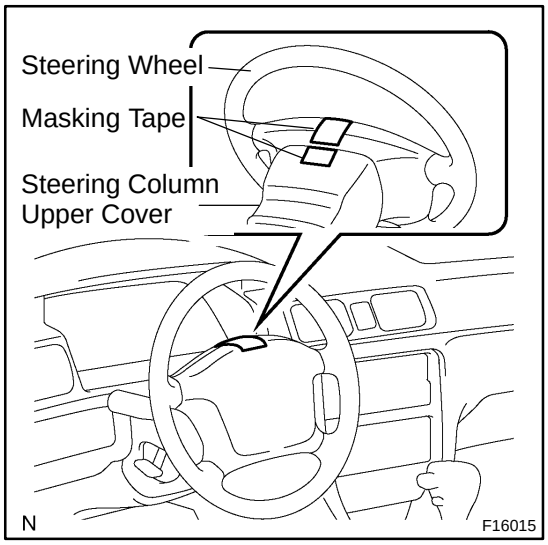

1. INSPECT STEERING WHEEL OFF CENTER

(a) Apply masking tape on the top center of the steering wheel and steering column upper cover.

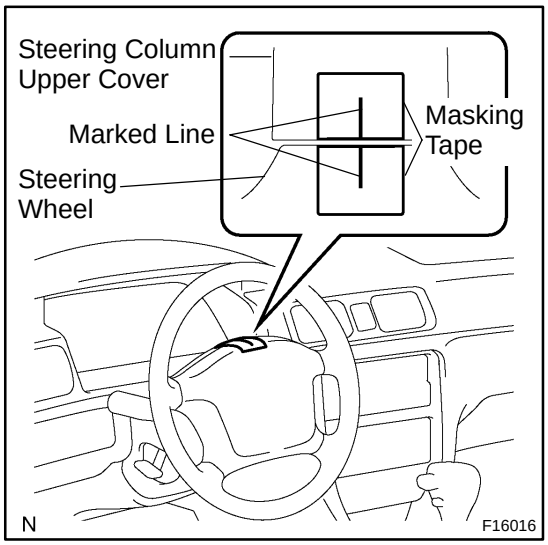

(b) Drive the vehicle in a straight line for 100 meters at a constant speed of 35 mph (56 km/h), and hold the steering wheel to maintain the course.

(c) Draw a line on the masking tape as shown in the illustration.

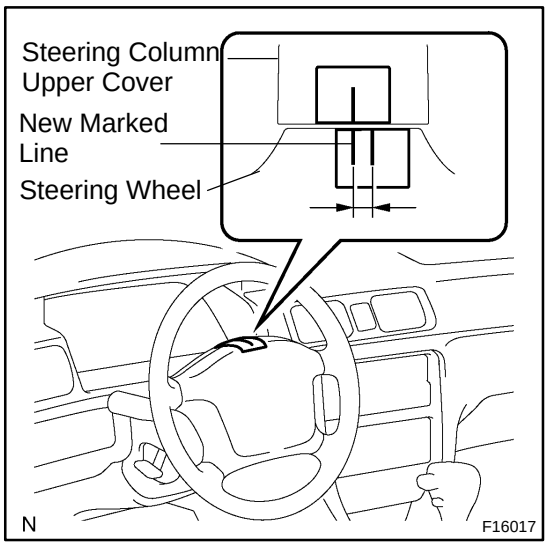

(d) Turn the steering wheel to its straight position.

HINT:

Refer to the upper surface of the steering wheel, steering spoke and SRS airbag line for the straight position.

(e) Draw a new line on the masking tape of the steering wheel as shown in the illustration.

(f) Measure the distance between the 2 lines on the masking tape of the steering wheel.

(g) Convert the measured distance to steering angle.
Measured distance 1 mm (0.04 in.) = Steering angle approximately 1 deg.

HINT:

Make a note of the steering angle.

2. ADJUST STEERING ANGLE

(a) Lift up the vehicle.

NOTICE:

The adjustment method for steering angle is different depending on the models. Check whether it is type A or B.

(b) Draw a line on the RH and LH tie rod and rack ends where it can easily be seen.

(c) Using a paper gauge, measure the distance from RH and LH tie rod ends to the rack end screws.

HINT:

- Measure the RH side and LH side.
- Make a note of the measured values.

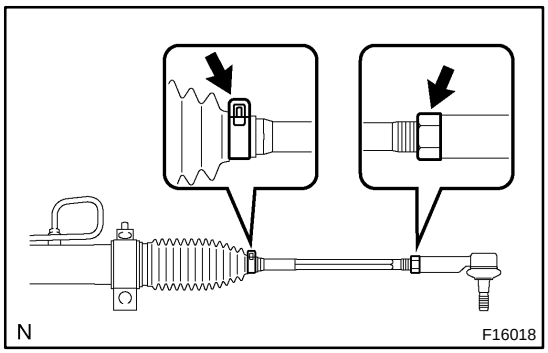

(d) Remove the RH and LH boot clips from the rack boots.

(e) Loosen the RH and LH lock nuts.

(f) Turn the RH and LH rack end by the same amount (but in different directions) according to the steering angle.
1 turn 360 deg. of rack end (1.5 mm (0.059 in.) horizontal movement) = 12 deg. of steering angle

(g) Tighten the RH and LH lock nuts by the specified torque.
Torque: 55 N·m (560 kgf·cm, 41 ft·lbf)

NOTICE:

Make sure that the difference in length between RH and LH tie rod ends and rack end screws are within 1.5 mm (0.059 in.).

(h) Install the RH and LH boot clips.

TROUBLESHOOTING

SR01T−09

PROBLEM SYMPTOMS TABLE

Use the table below to help you find the cause of the problem. The numbers indicate the priority of the likely cause of the problem. Check each part in the order shown. If necessary, repair or replace these parts.

Symptom	Suspect Area	See page
Hard steering	1. Tires (Improperly inflated)	SA−3
	2. Power steering fluid level (Low)	SR−5
	3. Drive belt (Loose)	SR−3
	4. Front wheel alignment (Incorrect)	SA−5
	5. Steering system joints (Worn)	−
	6. Suspension arm ball joints (Worn)	SA−84
	7. Steering column (Binding)	−
	8. Power steering vane pump	SR−45 SR−59
	9. Power steering gear	SR−70
Poor return	1. Tires (Improperly inflated)	SA−3
	2. Front wheel alignment (Incorrect)	SA−5
	3. Steering column (Binding)	−
	4. Power steering gear	SR−70
Excessive play	1. Steering system joints (Worn)	−
	2. Suspension arm ball joints (Worn)	SA−84
	3. Intermediate shaft, Sliding yoke (Worn)	−
	4. Front wheel bearing (Worn)	SA−19
	5. Power steering gear	SR−70
Abnormal noise	1. Power steering fluid level (Low)	SR−5
	2. Steering system joints (Worn)	−
	3. Power steering vane pump	SR−45 SR−59
	4. Power steering gear	SR−70

AIR CONDITIONING

SS08B−05

SERVICE DATA

Refrigerant charge volume		
	Access cab, Standard cab	600 ± 50 g (21.16 ± 1.76 oz.)
	Double cab	530 ± 50 g (18.69 ± 1.76 oz.)
Idle−up speed (1GR−FE)		
	Magnetic clutch not engaged	700 ± 50 rpm
	Magnetic clutch engaged	700 ± 50 rpm
Idle−up speed (2UZ−FE)		
	Magnetic clutch not engaged	750 ± 50 rpm
	Magnetic clutch engaged	800 ± 50 rpm
Magnetic clutch clearance	1GR−FE engine	0.35 to 0.60 mm (0.013 to 0.023 in.)
	2UZ−FE engine	0.5 ± 0.15 mm (0.020 ± 0.0059 in.)

SS08C−04

TORQUE SPECIFICATION

Part tightened		N·m	kgf·cm	ft·lbf
Compressor x Compressor bracket	1GR−FE engine	24	245	18
	2UZ−FE engine	25	250	18
Compressor bracket x Engine		47	475	34
Idle pulley lock nut		39	400	29
Compressor x Discharge hose		10	100	7
Compressor x Suction hose		10	100	7
Cooling unit x Suction tube		32	330	24
Expansion valve x Evaporator		5.4	55	48 in.·lbf
Receiver x Liquied tube		5.4	55	48 in.·lbf
Condenser x Liquid tube		10	100	7
Condenser x Discharge hose		10	100	7
Pressure switch x Liquied tube		10	100	7
Pressure plate x Compressor	1GR−FE engine	18	183	13
	2UZ−FE engine	13.2	135	9

AUTOMATIC TRANSMISSION (A750E, A750F)

SS1MV−01

SERVICE DATA

2UZ−FE (A750E)		
Line pressure (Wheel locked)		
	Engine idling	
	D position	361 − 421 kPa (3.7 − 4.3 kgf·cm^2, 52 − 61 psi)
	R position	495 − 576 kPa (5.0 − 5.9 kgf·cm^2, 72 − 84 psi)
	AT stall (Throttle valve fully opened)	
	D position	1,236 − 1,332kPa (12.6 − 13.6 kgf·cm^2, 179 − 193 psi)
	R position	1,229 − 1,349 kPa (12.5 − 13.8 kgf·cm^2, 178 − 196 psi)
Engine stall revolution	D and R positions	2,200 ± 150 rpm
Time lag	N → D position	Less than 1.2 seconds
	N → R position	Less than 1.5 seconds
Engine idle speed (A/C OFF)	N position	700 ± 50 rpm
Drive plate runout	Max.	0.20 mm (0.0079 in.)
Torque converter runout	Max.	0.30 mm (0.0118 in.)
Shift schedule		
D position		
(Throttle valve fully opened)	1 → 2	47 − 60 km/h (29 − 37 mph)
	2 → 3	89 − 101 km/h (55 − 62 mph)
	3 → 4	126 − 145 km/h (78 − 90 mph)
	4 → 5	171 − 188 km/h (106 − 117 mph)
	5 → 4	166 − 183 km/h (103 − 114 mph)
	4 → 3	116 − 130 km/h (72 − 81 mph)
	3 → 2	78 − 87 km/h (48 − 54 mph)
	2 → 1	36 − 43 km/h (22 − 27 mph)
(Throttle valve fully closed)	4 → 5	46 − 53 km/h (29 − 33 mph)
	5 → 4	23 − 29 km/h (14 − 18 mph)
4 position (O/D OFF)		
(Throttle valve fully opened)	1 → 2	47 − 60 km/h (29 − 37 mph)
	2 → 3	89 − 101 km/h (55 − 62 mph)
	3 → 4	126 − 145 km/h (78 − 90 mph)
	5 → 4	182 − 200 km/h (113 − 124 mph)
	4 → 3	116 − 130 km/h (72 − 81 mph)
	3 → 2	78 − 87 km/h (48 − 54 mph)
	2 → 1	36 − 43 km/h (22 − 27 mph)
3 position		
(Throttle valve fully opened)	1 → 2	47 − 60 km/h (29 − 37 mph)
	2 → 3	89 − 101 km/h (55 − 62 mph)
	4 → 3	127 − 142 km/h (79 − 88 mph)
	3 → 2	78 − 87 km/h (48 − 54 mph)
	2 → 1	36 − 43 km/h (22 − 27 mph)
2 position		
(Throttle valve fully opened)	1 → 2	47 − 60 km/h (29 − 37 mph)
	3 → 2	84 − 97 km/h (52 − 60 mph)
	2 → 1	36 − 43 km/h (22 − 27 mph)
L position		
(Throttle valve fully opened)	2 → 1	36 − 43 km/h (22 − 27 mph)
Lock−up point	Throttle valve opening 5 %	
D position		
5th gear	Lock−up ON	66 − 74 km/h (41 − 46 mph)
	Lock−up OFF	59 − 67 km/h (37 − 42 mph)
4 position		
4th gear	Lock−up ON	107 − 118 km/h (66 − 73 mph)
	Lock−up OFF	100 − 111 km/h (62 − 69 mph)

2UZ−FE (A750F)		
Line pressure (Wheel locked)		
	Engine idling	
	D position	361 − 421 kPa (3.7 − 4.3 kgf·cm^2, 52 − 61 psi)
	R position	495 − 576 kPa (5.0 − 5.9 kgf·cm^2, 72 − 84 psi)
	AT stall (Throttle valve fully opened)	
	D position	1,236 − 1,332kPa (12.6 − 13.6 kgf·cm^2, 179 − 193 psi)
	R position	1,229 − 1,349 kPa (12.5 − 13.8 kgf·cm^2, 178 − 196 psi)
Engine stall revolution	D and R positions	2,200 ± 150 rpm
Time lag	N → D position	Less than 1.2 seconds
	N → R position	Less than 1.5 seconds
Engine idle speed (A/C OFF)	N position	700 ± 50 rpm
Drive plate runout	Max.	0.20 mm (0.0079 in.)
Torque converter runout	Max.	0.30 mm (0.0118 in.)
Shift schedule		
D position		
(Throttle valve fully opened)	1 → 2	47 − 60 km/h (29 − 37 mph)
	2 → 3	88 − 101 km/h (55 − 62 mph)
	3 → 4	126 − 145 km/h (78 − 90 mph)
	4 → 5	170 − 188 km/h (106 − 117 mph)
	5 → 4	165 − 182 km/h (103 − 113 mph)
	4 → 3	116 − 130 km/h (72 − 81 mph)
	3 → 2	78 − 87 km/h (48 − 54 mph)
	2 → 1	36 − 43 km/h (22 − 27 mph)
(Throttle valve fully closed)	4 → 5	46 − 53 km/h (29 − 33 mph)
	5 → 4	23 − 29 km/h (14 − 18 mph)
4 position (O/D OFF)		
(Throttle valve fully opened)	1 → 2	47 − 60 km/h (29 − 37 mph)
	2 → 3	88 − 101 km/h (55 − 62 mph)
	3 → 4	126 − 145 km/h (78 − 90 mph)
	5 → 4	181 − 199 km/h (112 − 124 mph)
	4 → 3	116 − 130 km/h (72 − 81 mph)
	3 → 2	78 − 87 km/h (48 − 54 mph)
	2 → 1	36 − 43 km/h (22 − 27 mph)
3 position		
(Throttle valve fully opened)	1 → 2	47 − 60 km/h (29 − 37 mph)
	2 → 3	88 − 101 km/h (55 − 62 mph)
	4 → 3	127 − 142 km/h (79 − 88 mph)
	3 → 2	78 − 87 km/h (48 − 54 mph)
	2 → 1	36 − 43 km/h (22 − 27 mph)
2 position		
(Throttle valve fully opened)	1 → 2	47 − 60 km/h (29 − 37 mph)
	3 → 2	84 − 97 km/h (52 − 60 mph)
	2 → 1	36 − 43 km/h (22 − 27 mph)
L position		
(Throttle valve fully opened)	2 → 1	36 − 43 km/h (22 − 27 mph)
Lock−up point	Throttle valve opening 5 %	
D position		
5th gear	Lock−up ON	66 − 74 km/h (41 − 46 mph)
	Lock−up OFF	59 − 67 km/h (37 − 42 mph)
4 position		
4th gear	Lock−up ON	107 − 118 km/h (66 − 73 mph)
	Lock−up OFF	100 − 110 km/h (62 − 68 mph)

1GR−FE (A750E)		
Line pressure (Wheel locked)		
	Engine idling	
	D position	363 − 423 kPa (3.7 − 4.3 kgf·cm^2, 53 − 61 psi)
	R position	484 − 564 kPa (4.9 − 5.8 kgf·cm^2, 70 − 82 psi)
	AT stall (Throttle valve fully opened)	
	D position	1,282 − 1,381kPa (13.1 − 14.1 kgf·cm^2, 186 − 200 psi)
	R position	1,218 − 1,338 kPa (12.4 − 13.6 kgf·cm^2, 177 − 194 psi)
Engine stall revolution	D and R positions	2,400 ± 150 rpm
Time lag	N → D position	Less than 1.2 seconds
	N → R position	Less than 1.5 seconds
Engine idle speed (A/C OFF)	N position	700 ± 50 rpm
Drive plate runout	Max.	0.20 mm (0.0079 in.)
Torque converter runout	Max.	0.30 mm (0.0118 in.)
Shift schedule		
D position		
(Throttle valve fully opened)	1 → 2	47 − 60 km/h (29 − 37 mph)
	2 → 3	92 − 105 km/h (57 − 65 mph)
	3 → 4	133 − 153 km/h (83 − 95 mph)
	4 → 5	170 − 188 km/h (106 − 117 mph)
	5 → 4	163 − 180 km/h (101 − 112 mph)
	4 → 3	118 − 133 km/h (73 − 83 mph)
	3 → 2	79 − 88 km/h (49 − 55 mph)
	2 → 1	37 − 44 km/h (23 − 27 mph)
(Throttle valve fully closed)	4 → 5	44 − 51 km/h (27 − 32 mph)
	5 → 4	26 − 32 km/h (16 − 20 mph)
4 position (O/D OFF)		
(Throttle valve fully opened)	1 → 2	47 − 60 km/h (29 − 37 mph)
	2 → 3	92 − 105 km/h (57 − 65 mph)
	3 → 4	133 − 153 km/h (83 − 95 mph)
	5 → 4	182 − 200 km/h (113 − 124 mph)
	4 → 3	118 − 133 km/h (73 − 83 mph)
	3 → 2	79 − 88 km/h (49 − 55 mph)
	2 → 1	37 − 44 km/h (23 − 27 mph)
3 position		
(Throttle valve fully opened)	1 → 2	47 − 60 km/h (29 − 37 mph)
	2 → 3	92 − 105 km/h (57 − 65 mph)
	4 → 3	127 − 142 km/h (79 − 88 mph)
	3 → 2	79 − 88 km/h (49 − 55 mph)
	2 → 1	37 − 44 km/h (23 − 27 mph)
2 position		
(Throttle valve fully opened)	1 → 2	47 − 60 km/h (29 − 37 mph)
	3 → 2	84 − 97 km/h (52 − 60 mph)
	2 → 1	37 − 44 km/h (23 − 27 mph)
L position		
(Throttle valve fully opened)	2 → 1	40 − 47 km/h (25 − 29 mph)
Lock−up point	Throttle valve opening 5 %	
D position		
5th gear	Lock−up ON	65 − 73 km/h (40 − 45 mph)
	Lock−up OFF	58 − 66 km/h (36 − 41 mph)
4 position		
4th gear	Lock−up ON	65 − 73 km/h (40 − 45 mph)
	Lock−up OFF	58 − 66 km/h (36 − 41 mph)

SS1MW−01

TORQUE SPECIFICATION

Part tightened		N·m	kgf·cm	ft·lbf
Drain plug x Oil pan		20	204	15
Overflow plug x Oil pan		20	204	15
Refill plug x Transmission case		39	400	29
Speed sensor NT x Automatic transmission		5.4	55	48 in.·lbf
Speed sensor SP2 x Automatic transmission		5.4	55	48 in.·lbf
Transmission wire set bolt x Automatic transmission		5.4	55	48 in.·lbf
Transmission wire clamp x Valve body	A	11	112	8
	B	10	100	7
Oil pan x Transmission case		4.4	45	39 in.·lbf
Park/neutral position switch	Bolt	13	130	10
	Nut	6.9	70	61 in.·lbf
Shift solenoid valve S1 x Valve body		6.4	65	56 in.·lbf
Shift solenoid valve S2 x Valve body		10	102	7
Shift solenoid valve SR x Valve body		6.4	65	57 in.·lbf
Shift solenoid valve SLU, SL2 x Valve body		6.4	65	57 in.·lbf
Shift solenoid valve SLT, SL1 x Valve body		6.4	65	57 in.·lbf
Valve body x Transmission case		11	112	8
Oil strainer x Valve body		10	100	7
Parking lock pawl bracket x Transmission case		7.4	75	65 in.·lbf
Oil cooler x Body		11	110	8
Transmission oil cooler bracket x Oil cooler		4.9	50	43 in.·lbf
Oil cooler tube clamp x Body		5.0	50	48 in.·lbf
Shift lever x Shift lever housing		18	180	13
Shift lever housing x Steering column assemby		12	120	9
Parking lock cable No. 1 x Shift lever housing		2.9	29	25 in.·lbf
Parking lock cable No. 2 x Column upper bracket		2.2	23	19 in.·lbf
Parking lock cable housing x Steering column assembly		10.5	110	8
Heat insulator		16	164	12
Shift control cable x Transmission		14.5	148	11
Shift control cable bracket x Transmission		19.5	199	14
Oil cooler pipe clamp x Transmission		12	122	9
Oil cooler pipe x Transmission		34	346	25
Stabilizer bar		37	377	27
1GR−FE: Starter wire x Starter		9.8	100	7
1GR−FE: Starter		37	377	27
Rear end plate x Transmission		18	185	13
Torque converter clutch x Drive plate		48	490	35
Engine rear mounting insulator x Crossmember		18	185	13
Crossmember x Frame		72	734	53
Engine rear mounting insulator x Extension housing		65	660	48
Automatic transmission x Engine	17 mm head	71	724	52
	14 mm head	37	377	27

BODY ELECTRICAL

SERVICE DATA

SS03A−06

SPEEDOMETER (On−vehicle)	
USA:	
Standard indication (mph)	Allowable range (mph)
20	19 − 22
40	39 − 42.5
60	59.5 − 63.5
80	79.5 − 84
100	100 − 105
CANADA:	
Standard indication (km/h)	Allowable range (km/h)
20	17.5 − 21.5
40	38 − 42
60	58 − 63
80	78 − 84
100	98.5 − 104.5
120	119 − 125
140	139 − 146
160	159 − 167
TACHOMETER (On−vehicle) / DC 13.5 V 25˚C at (77˚F)	
2UZ−FE:	
Standard indication	Allowable range
700	630 − 770
1,000	900 − 1,100
2,000	1,875 − 2,125
3,000	2,850 − 3,150
4,000	3,850 − 4,150
5,000	4,850 − 5,150
6,000	5,820 − 6,180
TACHOMETER (On−vehicle) / DC 13.5 V 25˚C at (77˚F)	
1GR−FE:	
Standard indication	Allowable range
700	630 − 770
1,000	900 − 1,000
2,000	1,850 − 2,150
3,000	2,800 − 3,200
4,000	3,800 − 4,200
5,000	4,800 − 5,100
6,000	5,750 − 6,250
FUEL SENDER GAUGE	
Float position mm (in.)	Resistance (Ω)
SF: Approx. 116.5 (4.59) ± 2.5 (0.10)	Approx. 4.0
1/2: Approx. 14 (0.55)	Approx. 59.0
W/L: Approx. 72.2 (2.84)	Approx. 98.8

SE: Approx. 100 (3.90) ± 2.5 (0.10)	Approx. 110.0 ± 2.5
ENGINE COOLANT TEMPERATURE RECEIVER GAUGE	
Temperature °C (°F)	Resistance (kΩ)
−20 (−4)	13.54 to 16.63
20 (68)	2.28 to 2.63
80 (176)	0.31 to 0.33
110 (230)	0.138 to 0.15

BODY

TORQUE SPECIFICATION

SS13G−06

Part tightened		N·m	kgf·cm	ft·lbf
FRONT BUMPER				
Steel bumper type:				
Front bumper arm x Body		58	590	43
Front bumper reinforcement x Body		50	510	37
Front bumper bar x Front bumper side mounting bracket		4.9	50	43 in.·lbf
Front bumper side mounting bracket x Front bumper arm		12	120	9
Front bumper bar x Front balance panel		4.9	50	43 in.·lbf
Resin bumper type:				
Front bumper reinforcement x Body		50	510	37
Front bumper cover x Body		7	71	61 in.·lbf
Front bumper cover x Front bumper extension		5	51	44 in.·lbf
REAR BUMPER				
Rear bumper arm x Body		80	810	59
Rear bumper reinforcement x Rear bumper arm		80	810	59
Rear bumper bar x Rear bumper reinforcement		45	459	33
Rear bumper bar x Rear bumper reinforcement		29	310	22
w/ Towing hitch:				
Rear bumper reinforcement x Body		100	1020	74
Receiver hitch bracket x Rear bumper reinforcement		160	1632	118
HOOD				
Hood hinge x Hood		13	133	10
Hood lock x Body		7.8	80	69 in.·lbf
HOOD SUPPORT				
Hood support x Hood		22	224	16
Hood support x Body		22	224	16
FRONT DOOR				
Door hinge x Body		23	235	17
Door hinge x Door panel		23	235	17
Door check x Body		27	275	20
Door check x Door panel		5.0	51	44 in.·lbf
Door striker x Body		23	235	17
Outside handle x Door panel		5.5	56	49 in.·lbf
Door lock x Door panel	Torx® screw	5.0	51	44 in.·lbf
Door lock x Door panel	Bolt	8.0	82	71 in.·lbf
w/ Power door lock:				
Door lock x Door panel	Bolt	5.5	56	49 in.·lbf
Window regulator x Door panel	Bolt	8.0	82	71 in.·lbf
	Nut	5.0	51	44 in.·lbf
Door glass x Window regulator		5.0	51	44 in.·lbf
Outside rear view mirror x Door panel		8.0	82	71 in.·lbf
FRONT DOOR (Double Cab)				
Door hinge x Body		23	235	17

Part tightened	N·m	kgf·cm	ft·lbf
Door hinge x Door panel	23	235	17
Door check x Body	30	306	22
Door check x Door panel	5.5	56	49 in.·lbf
Door striker x Body	23	235	17
Outside handle x Door panel	5.5	56	49 in.·lbf
Door lock x Door panel Torx® screw	5.0	51	44 in.·lbf
Door lock x Door panel Bolt	5.0	51	44 in.·lbf
Window regulator x Door panel	8.0	82	71 in.·lbf
Door glass x Window regulator	8.0	82	71 in.·lbf
Outside rear view mirror x Door panel	8.0	82	71 in.·lbf
REAR DOOR (Double Cab)			
Door hinge x Body	23	235	17
Door hinge x Door panel	23	235	17
Door check x Body	30	306	22
Door check x Door panel	5.5	56	49 in.·lbf
Door striker x Body	23	235	17
Outside handle x Door panel	5.5	56	49 in.·lbf
Door lock x Door panel Torx® screw	5.0	51	44 in.·lbf
Window regulator x Door panel	8.0	82	71 in.·lbf
Door glass x Window regulator	8.0	82	71 in.·lbf
ACCESS DOOR			
Door hinge x Body	23	235	17
Door hinge x Door panel	23	235	17
Door check x Body	27	275	20
Door check x Door panel	5.0	51	44 in.·lbf
Cancel lever x Door panel	5.0	51	44 in.·lbf
Outside handle x Door panel	5.5	56	49 in.·lbf
Upper door lock x Door panel	12.5	128	9
Lower door lock x Door panel	5.0	51	44 in.·lbf
Door controller x Door panel	12.5	128	9
FRONT WIPER AND WASHER			
Wiper link x Body	5.5	56	49 in.·lbf
Wiper motor x Wiper link	5.5	56	49 in.·lbf
Wiper arm x Wiper link	20	204	15
WHEEL OPENING MOULDING			
Resin bumper type:			
Front bumper extension x Front bumper cover	5.0	51	44 in.·lbf
WINDSHIELD			
Inner rear view mirror x screw Double cab	2.5	25	22 in.·lbf
BACK WINDOW GLASS			
Power slide type:			
Back window regulator assembly x Body	5.5	56	49 in.·lbf
Tether anchor bracket x Body	20	200	15
Power vertical type:			
Back window regulator assembly x Body	8.0	82	71 in.·lbf

Part tightened		N·m	kgf·cm	ft·lbf
Service hole cover x Body		8.0	82	71
SLIDING ROOF				
Sliding roof housing x Body		5.5	56	49 in.·lbf
INSTRUMENT PANEL				
Front passenger airbag assembly x Instrument panel reinforcement		20	204	15
Front passenger airbag assembly x Instrument panel		5.0	51	44 in.·lbf
Steering wheel set nut		50	510	37
Steering wheel x Steering wheel pad		8.8	90	78 in.·lbf
TAIL GATE				
Tail gate hinge x Tail gate		17	178	13
Tail gate x Body		17	178	13
Tail gate cable x Tail gate		14	143	10
Tail gate cable x Body		14	143	10
Tail gate lock striker x Body		13	133	10
Tail gate handle x Tail gate		5.5	56	49 in.·lbf
Tail gate lock x Tail gate	LH	12.5	128	9
Tail gate lock x Tail gate	RH	13	133	10
FRONT SEAT				
Separate type:				
Armrest x Seatback assembly		37	380	27
Front seat inner belt x Seat frame assembly		42	430	32
w/ Side airbag: Seatback cover bracket x Seat frame assembly		5.5	56	49 in.·lbf
Front seat x Body		37	380	27
Bench type:				
Outer track assembly x Seat cushion frame		20	204	15
Seatback frame x Armrest		18	185	13
Seatback assembly x Seat cushion assembly		42	430	32
Seat track lower rear bracket x Outer track assembly		20	204	15
Seat position sensor (for driver seat) x RH Outer track assembly		8.0	82	71 in.·lbf
Seat position sensor (for passenger seat) x LH Outer track assembly		8.0	82	71 in.·lbf
Occupant classification ECU x Seat cushion frame		3.0	30	27 in.·lbf
Front seat x Body		37	380	27
Split type, Driver's side:				
Front seat inner belt x Seat frame assembly		42	430	32
w/ Side airbag: Seatback cover bracket x Seat frame assembly		5.5	56	49 in.·lbf
Front seat x Body		37	380	27
Split type, Passenger's side:				
Seat track handle sub−assembly x Seat cushion frame		10	102	7
Front seat inner belt x Seat cushion frame		42	430	32
Seat track x Seat cushion frame		15	153	11
Seat track lower bracket x Seat cushion frame		20	204	15
Front seat center belt retractor x Seatback frame	Bolt	21	214	15
	Nut	42	430	32

Part tightened		N·m	kgf·cm	ft·lbf
Front seat center belt x Seat cushion frame	Bolt	42	430	32
	Nut	5.5	56	49 in.·lbf
Seatback frame x Seat cushion frame	Torx® screw	42	430	32
	Bolt A	55	561	41
	Bolt B	21	214	15
w/ Side airbag: Seatback cover bracket x Seatback frame		5.5	56	49 in.·lbf
Center armrest assembly x Seatback frame		20	204	15
Seat position sensor (for passenger seat) x Inner seat track		8.0	82	71 in.·lbf
Occupant classification ECU x Seat cushion frame		3.0	30	27 in.·lbf
Front seat x Body		37	380	27
REAR SEAT (Bench type)				
Center armrest hinge x Center armrest		5.0	51	44 in.·lbf
Center armrest x Seatback assembly		21	215	16
Seatback assembly x Seatback lock		21	215	16
Seat cushion hinge plate x Seatback assembly		21	215	16
Seat cushion assembly x Seatback lock		21	215	16
Rear seat x Body		19	195	14
CRS tether anchor bracket x Seatback frame		9.0	92	80 in.·lbf
REAR SEAT (LH)				
Rear seat cushion hinge x Body		37	380	27
Rear No. 1 seat outer adjuster x Seat cushion frame		43	440	32
Rear No. 1 seat outer adjuster x Seatback frame		43	440	32
Rear No. 1 seat inner adjuster x Seat cushion frame		43	440	32
Rear No.1 seat inner adjuster x Seatback frame		43	440	32
Rear No.1 seat inner adjuster x Seat inner bracket		43	440	32
Rear seat shoulder belt guide x Seatback frame		42	430	32
REAR SEAT (RH)				
Rear seat cushion hinge x Body		37	380	27
Rear seat lock x Seat cushion frame		43	440	32
Rear seat reclining adjuster x Seat cushion frame		43	440	32
Rear seat reclining adjuster x Seatback frame		43	440	32
SEAT BELT				
Standard cab:				
Adjustable anchor x Body		42	430	32
Front seat outer belt shoulder anchor x Body		42	430	32
Front seat outer belt floor anchor x Body		42	430	32
Front seat outer belt retractor x Body	Upper bolt	8.5	87	75 in.·lbf
	Lower bolt	42	430	32
Front seat inner belt x Body		42	430	32
CRS tether anchor bracket x Body		20	204	15
Front seat center belt retractor x Body	Upper bolt	8.5	87	75 in.·lbf
	Lower bolt	42	430	32
Front seat center belt x Body		42	430	32
Access cab:				
Front seat outer belt shoulder anchor x Body		42	430	32

Part tightened		N·m	kgf·cm	ft·lbf
Front seat outer belt floor anchor x Body		42	430	32
Front seat outer belt retractor x ELR bracket	Upper bolt	8.5	87	75 in.·lbf
	Lower bolt	42	430	32
Front seat inner belt x Body		42	430	32
Part tightened		N·m	kgf·cm	ft·lbf
Front seat inner belt x Front seat		42	430	32
Front seat center belt x Front seat		42	430	32
Front seat center belt retractor x Front seat	Bolt	8.5	87	75 in.·lbf
	Nut	42	430	32
Rear seat outer belt shoulder anchor x Body		42	430	32
Rear seat outer belt floor anchor x Body		42	430	32
Rear seat outer belt retractor x Body		42	430	32
Rear seat inner belt x Body		42	430	32
Rear seat center belt x Body		42	430	32
Rear seat center belt retractor x Body	Upper bolt	8.5	87	75 in.·lbf
	Lower bolt	42	430	32
CRS tether anchor bracket x Body		20	204	15
Double cab:				
Front seat outer belt shoulder anchor x Adjustable anchor		42	430	32
Front seat outer belt floor anchor x Body		42	430	32
Front seat outer belt retractor x Body		42	430	32
Adjustable anchor x Body		42	430	32
Front seat inner belt x Front seat		42	430	32
Front seat inner belt x Body		42	430	32
Front seat center belt x Body		42	430	32
Front seat center belt retractor x Front seat	Bolt	8.5	87	75 in.·lbf
	Nut	42	430	32
Rear seat outer belt shoulder anchor x Adjustable anchor		42	430	32
Rear seat outer belt floor anchor x Body		42	430	32
Rear seat outer belt retractor x Body	Upper bolt	8.5	87	75 in.·lbf
Rear seat outer belt retractor x Body	Lower bolt	42	430	32
Rear seat center belt retractor x Rear seat		43	440	32
Rear seat center belt floor anchor x Rear seat		43	440	32
Rear seat inner belt		43	440	32

BRAKE

SERVICE DATA

SS084−04

Brake pedal height (from dash panel) (w/o VSC, standard, access cab)		163.6 to 173.6 mm (6.44 to 6.83 in.)
Brake pedal height (from dash panel) (w/ VSC, standard, access cab)		164.0 to 174.0 mm (6.46 to 6.85 in.)
Brake pedal height (from dash panel) (double cab)		151.1 to 165.1 mm (5.95 to 6.50 in.)
Stop light switch clearance		0.5 to 2.4 mm (0.020 to 0.094 in.)
Brake pedal free play		1 to 6 mm (0.04 to 0.24 in.)
Parking brake pedal travel at 294 N (30 kgf, 66 lbf)		8 to 10 clicks
Parking brake lever travel at 196 N (20 kgf, 44 lbf)		19 to 25 clicks
Brake booster push rod to piston clearance (w/ SST)		0 mm (0 in.)
Brake pedal reserve distance from asphalt sheet at 490 N (50 kgf, 110.2 lbf)		More than 95 mm (3.74 in.)
Front brake pad thickness	STD	11.5 mm (0.453 in.)
	Minimum	1.0 mm (0.039 in.)
Front brake disc thickness	STD	28.0 mm (1.102 in.)
	Minimum	26.0 mm (1.024 in.)
Front brake disc runout	Maximum	0.07 mm (0.0028 in.)
Rear brake drum inside diameter	STD	295.0 mm (11.614 in.)
	Maximum	297.0 mm (11.693 in.)
Rear brake shoe lining thickness	STD	6.0 mm (0.236 in.)
	Minimum	1.0 mm (0.039 in.)
Rear brake drum to shoe clearance		0.5 mm (0.020 in.)
Rear axle load (includes vehicle weight) (standard cab)		950 kg (2,094 lb)
Rear axle load (includes vehicle weight) (access cab) 1GR−FT		1,000 kg (2,205lb)
Rear axle load (includes vehicle weight) (access cab) 2UZ−FT		1,050 kg (2,315 lb)
Rear brake pressure (front brake pressure at 7,845 kPa (80 kgf/cm^2, 1,138 psi)		5,110 ± 490 kPa (52.1 ± 5 kgf/cm^2, 741 ± 71 psi)
Fluid pressure (LSP & BV) initial set		120 mm (4.72 in.)
Fluid pressure (LSP & BV) adjustment range		112 to 128 mm (4.41 to 5.04 in.)
Valve piston pin and load sensing contact surface	Wear limit	0.7 mm (0.028 in.)

SS085−06

TORQUE SPECIFICATION

Part tightened	N·m	kgf·cm	ft·lbf
Master cylinder x Piston stopper bolt	10	100	7
Master cylinder x Reservoir	1.8	18	16 in.·lbf
Master cylinder x Booster (w/o VSC)	13	130	9
Brake master cylinder x Master cylinder body (w/ VSC)	25	255	11
Bleeder plug	11	110	8
Parking brake wire lock nut x Adjust nut	5.4	55	48 in.·lbf
Brake booster x Body	13	130	9
Brake line union nut x ABS actuator	15.2	155	11.2
Brake line union nut x Hydraulic brake booster	15.2	155	11.2
Hydraulic brake booster x Body	14.2	145	10
Hydraulic brake booster x Brake actuator bracket No. 1	7.8	80	69 in.·lbf
Hydraulic brake booster x Brake actuator bracket	7.8	80	69 in.·lbf
Hydraulic brake booster x Master cylinder reservoir assembly	1.7	17	15 in.·lbf
Hydraulic brake booster x Brake actuator tube No. 1	15.2	155	11.2
Hydraulic brake booster x Wire harness	2.9	30	26
Pump motor assembly x Hydraulic brake booster	7.8	80	69 in.·lbf
Hydraulic brake booster x Pump motor bracket	7.8	80	69 in.·lbf
Hydraulic brake booster x Master cylinder solenoid	31.9	325	24
Clevis lock nut (w/ VSC)	25.5	260	19
Clevis lock nut (w/o VSC)	25	255	11
Brake booster accumulator assembly x Pump motor assembly	57.4	585	42
Yaw rate sensor x Body	12.5	128	9
Brake line union nut	15	155	11
Front disc brake caliper x Steering knuckle	123	1,250	90
Rear drum brake wheel cylinder x Backing plate	10	100	7
Parking brake bellcrank bracket x Backing plate	13	130	9
LSP & BV x LSP & BV bracket	13	130	9
LSP & BV bracket x Load sensing spring assembly	18	185	13
Load sensing spring assembly x Shackle No. 1	18	185	13
Shackle No. 1 x Shackle No. 2	13	130	9
Shackle No. 2 x Shackle bracket	13	130	9
LSP & BV bracket x Frame	29	300	22
Shackle bracket x Rear axle housing	29	300	22
Actuator bracket x ABS actuator	5.4	55	48 in.·lbf
Actuator bracket x Body	11.2	114	8
Speed sensor installation bolt	8.0	82	71 in.·lbf
Front speed sensor harness x Steering knuckle	8.0	82	71 in.·lbf
Front speed sensor harness x Upper arm	8.0	82	71 in.·lbf
Front speed sensor harness x Coil support	8.0	82	71 in.·lbf
Rear speed sensor harness x Rear axle housing	8.0	82	71 in.·lbf

CHARGING (1GR−FE)

SS1MF−01

SERVICE DATA

Battery		
Voltage	at 20˚C (68˚F)	12.5 to 12.9 V
Except maintenance−free battery	Standard specific gravity	1.25 to 1.29 at 20 °C (68 °F)
Voltage regulator		
Regulating voltage		13.2 to 14.8 V
Generator brush holder assy		
Brush length	Standard	10.5 mm (0.413 in.)
	Minimum	4.5 mm (0.177 in.)
Generator rotor assy		
Resistance	at 20°C (68°F)	2.3 to 2.7 Ω
Slip ring diameter	Standard	14.2 to 14.4 mm (0.559 to 0.567 in.)
	Minimum	14.0 mm (0.551 in.)

SS1MG−01

TORQUE SPECIFICATION

Part Tightened	N·m	kgf·cm	ft·lbf
Generator assy x V−ribbed belt tensioner and cylinder head	43	438	32
Generator assy x Wire harness clamp bracket	8.0	82	71 in.·lbf
Generator assy x Terminal B	9.8	100	7
Wire harness stay x Body	8.0	82	71 in.·lbf
V−bank cover x Intake air surge tank sub−assy and Air cleaner assy	7.5	76	66 in.·lbf
Engine under cover sub−assy No.1 x Frame assy	29	296	21
Engine under cover assy rear x Frame assy	29	296	21
Retainer plate x Drive end frame assy generator	2.6	27	23 in.·lbf
Generator coil assy x Drive frame assy generator	5.8	59	51 in.·lbf
Generator brush holder assy x Generator coil assy	1.8	18	16 in.·lbf
Generator rear end cover x Generator coil assy	4.6	47	41 in.·lbf
Generator pulley x Generator rotor assy	110	1,122	81

CHARGING (2UZ−FE)

SS0OF−06

SERVICE DATA

Battery	Exept maintenance−free		
	Specific gravity	at 20˚C (68˚F)	1.25 to 1.29
	Maintenance−free		
	Voltage	at 20˚C (68˚F)	12.5 to 12.9 V
Generator	Rated output		12V 100A
	Rotor coil resistance	at 20˚C (68˚F)	2.1 to 2.5 Ω
	Slip ring diameter	Standard	14.2 to 14.4 mm (0.559 to 0.567 in.)
		Minimum	12.8 mm (0.504 in.)
	Brush exposed length	Standard	10.5 mm (0.413 in.)
		Minimum	1.5 mm (0.059 in.)
Voltage regulator	Regulating voltage		13.2 to 14.8 V

SS0OG−03

TORQUE SPECIFICATION

Part tightened		N·m	kgf·cm	ft·lbf
Bearing retainer x Drive end frame		3.0	31	27 in.·lbf
Rectifier end frame x Drive end frame	without Cord clip	4.5	46	39 in.·lbf
	with Cord clip	5.4	55	48 in.·lbf
Generator pulley x Rotor		110.5	1,125	81
Rectifier holder x Lead wire on rectifier end frame		2.94	30	26 in.·lbf
Voltage regulator x Rectifier end frame, Rectifier holder		1.96	20	17 in.·lbf
Brush holder x Rectifier holder, Voltage regulator		1.96	20	17 in.·lbf
Rear end cover x Rectifier holder		4.4	45	39 in.·lbf
Plate terminal x Rectifier holder	Bolt	3.85	39	34 in.·lbf
	Nut	4.4	45	39 in.·lbf
Terminal insulator x Rectifier holder		4.1	42	36 in.·lbf
Generator x Cylinder block		39	400	29

CLUTCH

SERVICE DATA

SS07T−04

Pedal height from dash panel		170.2 to 180.2 mm (6.701 to 7.095 in.)
Pedal height from dash insulator		157.7 to 167.7 mm (6.209 to 6.602 in.)
Push rod play at pedal top		1.0 to 5.0 mm (0.039 to 0.197 in.)
Pedal freeplay		5.0 to 15.0 mm (0.197 to 0.591 in.)
Clutch release point from pedal full stroke end position	Standard	25 mm (0.98 in.) or more
Disc rivet head depth	Minimum	0.3 mm (0.012 in.)
Disc runout	Maximum	0.7 mm (0.027 in.)
Flywheel runout	Maximum	0.1 mm (0.004 in.)
Diaphragm spring for wear	Maximum depth Maximum width	0.5 mm (0.020 in.) 6.0 mm (0.236 in.)
Diaphragm spring tip non−alignment	Maximum	0.5 mm (0.020 in.)

SS07U−04

TORQUE SPECIFICATION

Part tightened	N·m	kgf·cm	ft·lbf
Master cylinder mounting nut	14	143	10
Clutch line union	15	155	11
Bleeder plug x Release cylinder body	11	110	8
Release cylinder installation bolt	12	120	9
Clutch accumulator installation bolt	12	120	9
Clutch housing cover installation bolt	12	120	9
Clutch cover x Flywheel	19	195	14
Release fork support x Transmission	47	479	35

COOLING (1GR−FE)

SS1MD−01

SERVICE DATA

Water inlet w/ thermostat		
Valve opening temperature		80 to 84 °C (176 to 183 °F)
Valve lift	at 95 °C (203 °F)	8 mm (0.31 in.) or more
Radiator cap		
Relief valve opening pressure	Standard	93 to 123 kPa (0.95 to 1.25 kgf/cm^2, 13.5 to 17.8 psi)
	Minimum	78 kPa (0.8 kgf/cm^2, 11.4 psi)

SS1ME−01

TORQUE SPECIFICATION

Part Tightened	N·m	kgf·cm	ft·lbf
Cylinder block water drain cock plug x Cylinder block water drain cock	13	130	9
Water pump assy x Timing chain or belt cover sub−assy			
10 mm (0.39 in.) head	9.0	92	80 in.·lbf
12 mm (0.47 in.) head	23	235	17
Idler pulley sub−assy No. 2 x Timing chain or belt cover sub−assy	39	398	29
Water inlet x Timing chain or belt cover sub−assy	9.0	92	80 in.·lbf
Fan shroud x Radiator	5.0	51	44 in.·lbf
Fan w/ fluid coupling x Water pump	21	214	15
V−bank cover x Intake air surge tank	7.5	76	66 in.·lbf
Engine under cover sub−assy No. 1 x Frame assy	29	296	21
Water inlet w/ thermostat x Water inlet	9.0	92	80 in.·lbf
Radiator x Radiator support	18	184	13

COOLING (2UZ−FE)

SS0O9−06

SERVICE DATA

Thermostat	Valve opening temperature		80 to 84°C (176 to 183°F)
	Valve lift	at 95°C (203°F)	10 mm (0.39 in.) or more
Radiator cap	Relief valve opening pressure	Standard	74 to 103 kPa (0.75 to 1.05 kgf/cm^2, 10.7 to 14.9 psi)
		Minimum	59 kPa (0.6 kgf/cm^2, 8.6 psi)

SS0OA−05

TORQUE SPECIFICATION

Part tightened		N·m	kgf·cm	ft·lbf
Drain plug x Union on cylinder block		12.7	130	9
Fan x Fluid coupling		5.5	55	47 in.·lbf
Water pump x Cylinder block	Bolt	21	215	15
	Stud bolt and nut	18	185	13
Water inlet housing x Water pump		18	185	13
Water inlet x Water inlet housing		19	195	14
Radiator x Radiator support		12.7	130	9
No.1 fan shroud x Radiator		5	50	44 in.·lbf
Radiator mounting bolt		12	120	9

EMISSION CONTROL (1GR−FE)

TORQUE SPECIFICATION

SS1MJ−01

Part tightened	N·m	kgf·cm	ft·lbf
PCV valve x LH cylinder head cover	27	275	20
Charcoal canister x Charcoal canister cover	14.7	150	11
Heated oxygen sensor x Front exhaust pipe	44	450	33
A/F sensor x Front exhaust pipe	44	450	33
Exhaust manifold x Cylinder head	21	214	15
Manifold stay x Exhaust manifold	40	408	30
Front exhaust pipe x Exhaust manifold	62	630	46
Exhaust center pipe x LH front exhaust pipe	48	489	35
Exhaust center pipe x RH front exhaust pipe	43	440	32

EMISSION CONTROL (2UZ−FE)

SS1M8−02

SERVICE DATA

VSV for air injection system	Resistance	at 20°C (68°F)	33 to 39 Ω

SS0O5−06

TORQUE SPECIFICATION

Part tightened	N·m	kgf·cm	ft·lbf
Front exhaust pipe x Exhaust manifold	62	632	46
Front exhaust pipe x Center pipe	48	489	35
Heated oxygen sensor x Front exhaust pipe	44	450	32
Air pump assembly x Cylinder head	16	163	12
Air switching valve No.2 x Cylinder head	10	102	7
Air tube No.3 x Cylinder head	10	102	7

ENGINE MECHANICAL (1GR−FE)

SS1MH−01

SERVICE DATA

Compression pressure			1.3 MPa (13.3 kgf·cm^2, 189 psi) or more
		Minimum	1.0 MPa (10.2 kgf·cm^2, 145 psi)
	Difference of pressure between each cylinder		0.1 MPa (1.0 kgf·cm^2, 15 psi) or less
Valve clearance		at cold intake	0.15 to 0.25 mm (0.006 to 0.010 in.)
		Exhaust	0.29 to 0.39 mm (0.011 to 0.015 in.)
	Valve clearance adjusting shim	No. 06	5.060 mm (0.1992 in.)
		08	5.080 mm (0.2000 in.)
		10	5.100 mm (0.2008 in.)
		12	5.120 mm (0.2016 in.)
		14	5.140 mm (0.2024 in.)
		16	5.160 mm (0.2031 in.)
		18	5.180 mm (0.2039 in.)
		20	5.200 mm (0.2047 in.)
		22	5.220 mm (0.2055 in.)
		24	5.240 mm (0.2063 in.)
		26	5.260 mm (0.2071 in.)
		28	5.280 mm (0.2079 in.)
		30	5.300 mm (0.2087 in.)
		32	5.320 mm (0.2094 in.)
		34	5.340 mm (0.2102 in.)
		36	5.360 mm (0.2110 in.)
		38	5.380 mm (0.2118 in.)
		40	5.400 mm (0.2126 in.)
		42	5.420 mm (0.2134 in.)
		44	5.440 mm (0.2142 in.)
		46	5.460 mm (0.2150 in.)
		48	5.480 mm (0.2157 in.)
		50	5.500 mm (0.2165 in.)
		52	5.520 mm (0.2173 in.)
		54	5.540 mm (0.2181 in.)
		56	5.560 mm (0.2189 in.)
		58	5.580 mm (0.2197 in.)
		60	5.600 mm (0.2205 in.)
		62	5.620 mm (0.2213 in.)
		64	5.640 mm (0.2220 in.)
		66	5.660 mm (0.2228 in.)
		68	5.680 mm (0.2236 in.)
		70	5.700 mm (0.2244 in.)
		72	5.720 mm (0.2252 in.)
		74	5.740 mm (0.2260 in.)
Ignition timing	w/ Terminals TC and CG connected of DLC3		8 to 12° BTDC at idle
	w/o Terminals TC and CG connected of DLC3		7 to 24° BTDC at idle
Idle speed			650 to 750 rpm
Timing chain	No. 1 and No. 2 Timing chain elongation	Maximum	146.8 mm (5.780 in.)
	Camshaft timing gear diameter (w/ No. 1 chain)	Minimum	115.5 mm (4.547 in.)
	Camshaft timing gear diameter (w/ No. 2 chain)	Minimum	73.1 mm (2.878 in.)
	Camshaft timing sprocket (w/ No. 2 chain)	Minimum	73.1 mm (2.878 in.)
	Crankshaft timing gear diameter (w/ chain)	Minimum	61.0 mm (2.402 in.)
	Idle gear No. 1 diameter (w/ chain)	Minimum	61.0 mm (2.402 in.)
Idle gear shaft oil clearance	Idle gear shaft diameter		22.987 to 23.000 mm (0.9050 to 0.9055 in.)
	Idle gear inside diameter		23.02 to 23.03 mm (0.9063 to 0.9067 in.)
	Oil clearance	Standard	0.020 to 0.043 mm (0.0008 to 0.0017 in.)
		Maximum	0.093 mm (0.0037 in.)

Chain tensioner	No. 2 depth		Maximum	1.0 mm (0.039 in.)
	Slipper depth		Maximum	1.0 mm (0.039 in.)
Chain vibration damper	Depth		Maximum	1.0 mm (0.039 in.)
Cylinder head	Warpage		Maximum	0.10 mm (0.0039 in.)
	Cylinder head bolt thread outside diameter		Standard	10.85 to 11.00 mm (0.4272 to 0.4331 in.)
			Minimum	10.7 mm (0.421 in.)
	Valve guide bushing bore diameter		Standard	10.295 to 10.315 mm (0.4053 to 0.4061 in.)
	Valve guide busing diameter		Standard	10.333 to 10.344 mm (0.4068 to 0.4072 in.)
			O/S 0.05	10.383 to 10.394 mm (0.4088 to 0.4092 in.)
	Protrusion height			9.3 to 9.7 mm (0.366 to 0.382 in.)
Intake manifold	Warpage			
	Intake air surge tank side:		Maximum	0.8 mm (0.031 in.)
	Cylinder head side:		Maximum	0.2 mm (0.008 in.)
Exhaust manifold	Warpage		Maximum	0.7 mm (0.028 in.)
Valve	Stem diameter		Intake	5.470 to 5.485 mm (0.2154 to 0.2159 in.)
			Exhaust	5.465 to 5.480 mm (0.2152 to 0.2158 in.)
	Valve face angle			44.5°
	Margin thickness		Standard	1.0 mm (0.039 in.)
			Minimum	0.5 mm (0.020 in.)
	Stem oil clearance	Standard	Intake	0.025 to 0.060 mm (0.0010 to 0.0024 in.)
			Exhaust	0.030 to 0.065 mm (0.0012 to 0.0026 in.)
		Maximum	Intake	0.08 mm (0.0031 in.)
			Exhaust	0.10 mm (0.0039 in.)
	Valve overall length	Standard	Intake	106.95 mm (4.2106 in.)
			Exhaust	105.80 mm (4.1654 in.)
		Minimum	Intake	106.40 mm (4.1890 in.)
			Exhaust	105.30 mm (4.1457 in.)
Valve spring	Deviation		Maximum	2.0 mm (0.079 in.)
	Free length			47.80 mm (1.8819 in.)
	Installed tension at 33.3 mm (1.311 in.)			186.2 to 205.8 N (19.0 to 21.0 kgf, 41.9 to 46.3 lbf)
Valve guide bushing	Inside diameter			5.51 to 5.53 mm (0.2169 to 0.2177 in.)
Valve lifter	Lifter diameter			30.966 to 30.976 mm (1.2191 to 1.2195 in.)
	Lifter bore diameter			31.009 to 31.025 mm (1.2208 to 1.2215 in.)
	Oil clearance		Standard	0.033 to 0.059 mm (0.0013 to 0.0023 in.)
			Maximum	0.08 mm (0.0031 in.)
Camshaft	Thrust clearance		Standard	0.04 to 0.09 mm (0.016 to 0.035 in.)
			Maximum	0.11 mm (0.0043 in.)
	Circle runout			0.06 mm (0.0024 in.)
	Cam lobe height	Standard	Intake	44.168 to 44.268 mm (1.7389 to 1.7428 in.)
			Exhaust	44.580 to 44.680 mm (1.7551 to 1.7591 in.)
		Minimum	Intake	44.018 mm (1.7330 in.)
			Exhaust	44.430 mm (1.7492 in.)
	Journal diameter		No. 1	35.971 to 35.985 mm (1.4162 to 1.4167 in.)
			Other	22.959 to 22.975 mm (0.9039 to 0.9045 in.)
	Oil clearance		Standard	
			RH side No. 1 (Intake)	0.008 to 0.038 mm (0.0003 to 0.0015 in.)
			RH side No. 1 (Exhaust)	0.040 to 0.079 mm (0.0016 to 0.0031 in.)
			LH side No. 1 (Intake)	0.040 to 0.079 mm (0.0016 to 0.0031 in.)
			Other	0.025 to 0.062 mm (0.0010 to 0.0024 in.)
			Maximum	
			RH side No. 1 (Intake)	0.07 mm (0.0028 in.)
			Other	0.10 mm (0.0039 in.)

Connecting rod	Thrust clearance	Standard	0.15 to 0.30 mm (0.0059 to 0.0118 in.)
		Maximum	0.35 mm (0.0138 in.)
	Connecting rod oil clearance	Standard	0.026 to 0.046 mm (0.0010 to 0.0018 in.)
		Maximum	0.066 mm (0.0025 in.)
	Connecting rod bolt tension portion diameter	Standard	7.2 to 7.3 mm (0.283 to 0.287 in.)
		Minimum	7.0 mm (0.276 in.)
	Connecting rod bearing center wall thickness	Mark	
		1	1.484 to 1.487 mm (0.0584 to 0.0585 in.)
		2	1.487 to 1.490 mm (0.0585 to 0.0587 in.)
		3	1.490 to 1.493 mm (0.0587 to 0.0588 in.)
		4	1.493 to 1.496 mm (0.0588 to 0.0589 in.)
	Rod alignment	Maximum per 100 mm (3.94 in.)	0.05 mm (0.0020 in.)
	Rod twist	Maximum per 100 mm (3.94 in.)	0.05 mm (0.0059 in.)
	Bushing inside diameter	Mark	
		A	22.005 to 22.008 mm (0.8663 to 0.8665 in.)
		B	22.009 to 22.011 mm (0.8665 to 0.8666 in.)
		C	22.012 to 22.014 mm (0.8666 to 0.8667 in.)
	Bushing oil clearance	Standard	0.005 to 0.011 mm (0.0002 to 0.0004 in.)
		Maximum	0.050 mm (0.0020 in.)
Crankshaft	Thrust clearance	Standard	0.04 to 0.24 mm (0.0016 to 0.0094 in.)
		Maximum	0.30 mm (0.0118 in.)
	Crankshaft bearing cap set bolt tension portion diameter	Standard	10.0 to 10.2 mm (0.393 to 0.402 in.)
	Circuit runout	Maximum	0.06 mm (0.0024 in.)
	Main journal diameter		71.988 to 72.000 mm (2.8342 to 2.8346 in.)
	Main journal taper and out−of−round	Maximum	0.02 mm (0.0008 in.)
	Crank pin diameter		55.992 to 56.000 mm (2.2044 to 2.2047 in.)
	Crank pin taper and out−of−round	Maximum	0.02 mm (0.0008 in.)
	Oil clearance	Standard	0.018 to 0.030 mm (0.0007 to 0.0012 in.)
		Maximum	0.046 mm (0.0018 in.)
	Main journal bore diameter on cylinder block		77.000 to 77.016 mm (3.0315 to 3.0321 in.)
	Standard bearing center wall thickness	Mark	
		1	2.488 to 2.491 mm (0.0980 to 0.0981 in.)
		2	2.491 to 2.494 mm (0.0981 to 0.0982 in.)
		3	2.494 to 2.497 mm (0.0982 to 0.0983 in.)
		4	2.497 to 2.500 mm (0.0984 to 0.0985 in.)
		5	2.500 to 2.503 mm (0.0984 to 0.0985 in.)

Cylinder block	Cylinder head surface warpage		Maximum	0.05 mm (0.0020 in.)
	Cylinder bore diameter		Standard	94.000 to 94.012 mm (3.7008 to 3.7013 in.)
			Maximum	94.132 mm (3.7060 in.)
Piston and piston ring	Piston diameter			93.910 to 93.920 mm (3.6972 to 3.6976 in.)
	Piston oil clearance		Standard	0.080 to 0.102 mm (0.0031 to 0.0040 in.)
			Maximum	0.13 mm (0.0051 in.)
	Piston pin hole inside diameter		Mark	
			A	22.001 to 22.004 mm (0.8662 to 0.8663 in.)
			B	22.005 to 22.007 mm (0.8663 to 0.8664 in.)
			C	22.008 to 22.010 mm (0.8665 to 0.8665 in.)
	Piston pin diameter		Mark	
			A	21.997 to 22.000 mm (0.8660 to 0.8661 in.)
			B	22.001 to 22.003 mm (0.8661 to 0.8663 in.)
			C	22.004 to 22.006 mm (0.8663 to 0.8664 in.)
	Bushing oil clearance		Standard	0.001 to 0.007 mm (0.00004 to 0.00028 in.)
			Maximum	0.040 mm (0.0016 in.)
	Piston ring groove clearance		No. 1	0.02 to 0.07 mm (0.0008 to 0.0028 in.)
			No. 2	0.02 to 0.06 mm (0.0008 to 0.0024 in.)
			Oil	0.07 to 0.15 mm (0.0028 to 0.0060 in.)
	Piston ring end gap	Standard	No. 1	0.30 to 0.40 mm (0.0118 to 0.0157 in.)
			No. 2	0.40 to 0.50 mm (0.0157 to 0.0197 in.)
			Oil	
			(Side rail)	0.10 to 0.40 mm (0.0039 to 0.0157 in.)
		Maximum	No. 1	1.0 mm (0.039 in.)
			No. 2	1.1 mm (0.043 in.)
			Oil	
			(Side rail)	1.0 mm (0.039 in.)

SS1MI−01

TORQUE SPECIFICATION

Part tightened		N·m	kgf·cm	ft·lbf
Spark plug x Cylinder head		20	200	15
Bearing cap x Cylinder head	for 10 mm (0.39 in.) head	9.0	92	80 in.·lbf
Bearing cap x Cylinder head	for 12 mm (0.47 in.) head	24	245	18
Chain tensioner No. 2 x Cylinder head		19	194	14
Camshaft timing sprocket x Camshaft		100	1,020	74
Camshaft timing gear assembly x Camshaft		100	1,020	74
Chain tensioner x Cylinder block		10	102	7
Timing chain cover plate x Timing chain cover		9.0	92	80
V−bank cover		7.5	76	66 in.·lbf
Air cleaner		8.0	82	71 in.·lbf
Fan pulley x Water pump		21	214	15
Vane pump x Engine		43	438	32
Oil level gauge guide x Cylinder block		9.0	92	80
Generator x Generator bracket		43	438	32
Generator wire x Generator		9.8	100	7
Wire harness clamp bracket x Generator		8.0	82	71 in.·lbf
Suction hose sub−assy x Cylinder block		8.0	82	71 in.·lbf
Cooler compressor x V−ribbed belt tensioner		25	255	18
Idler pulley No. 1 x Cylinder block		54	551	40
Idler pulley No. 2 x Cylinder block		39	398	29
Water inlet x Cylinder head		9.0	92	80 in.·lbf
V−ribbed belt tensioner x Cylinder block		36	367	27
Oil pan x Cylinder block (See page EM−89)	Bolt A, B, Nut Bolt C	21 10	214 102	15 7
Oil pan x transmission		37	377	27
Oil strainer x Oil pan		9.0	92	80 in.·lbf
Oil pan No. 2 x Oil pan (See page EM−89)	Bolt Nut	9.0 10	92 102	80 in.·lbf 7
Drain plug x Oil pan No. 2		40	408	30
Stud bolt x Oil pan		4.0	41	35 in.·lbf
Crankshaft pulley set bolt		250	2,549	184
Timing chain cover x Cylinder head and cylinder block		23	235	17
Chain vibration damper No. 1 x Cylinder block		19	194	14
Idle gear shaft No. 2 x Cylinder block		60	612	44
Intake air surge tank x Intake manifold		28	286	21
Surge tank stay x Intake air surge tank and cylinder head		21	214	15
Ignition coil x Cylinder head cover		10	102	7
Oil baffle plate x Surge tank stay No. 1		9.0	92	80 in.·lbf
Cylinder head cover x Cylinder head (See page EM−89)	Bolt A, Nut Bolt B	9.0 10	92 102	80 in.·lbf 7
Throttle body bracket		21	214	15
Exhaust manifold x Cylinder head		21	214	15
Front exhaust pipe x Exhaust manifold		62	630	46
Manifold stay x Front exhaust pipe and transmission		40	408	30

RH front exhaust pipe x Center exhaust pipe		43	440	32
Water by−pass joint x Cylinder head		9.0	92	80 in.·lbf
LH front exhaust pipe x Center exhaust pipe		48	490	35
Intake manifold x Cylinder head		26	265	19
Oil filter cap housing x Cylinder head cover		9.0	92	80 in.·lbf
Camshaft timing oil control valve x Cylinder head		9.0	92	80 in.·lbf
Fuel pipe bracket		9.0	92	80 in.·lbf
Ventilation valve x Cylinder head cover		27	275	20
VVT sensor x Cylinder head		9.0	92	80 in.·lbf
Oil control valve filter x Cylinder head		62	632	46
Cylinder head x Cylinder block (See page EM−89)	1st 2nd	36 turn 180°	367 turn 180°	27 turn 180°
LH Cylinder head x Cylinder block		30	306	22
Camshaft bearing cap No. 1 x Cylinder head		24	245	18
Camshaft bearing cap No. 2 x Cylinder head		9.0	92	80 in.·lbf
Stud bolt x Cylinder head (See page EM−82)	A and C B	4.0 19.5	41 199	35 in.·lbf 14
Union x Cylinder head		15	153	11
Straight screw plug x Cylinder head		80	816	59
Drive plate x Crankshaft		49	500	36
Engine mounting bracket x Frame bracket		38	388	28
Water outlet pipe No. 1 x Cylinder block		10	102	7
Knock sensor x Cylinder block		20	204	15
Water drain lock x Cylinder block		25	255	18
Connecting rod cap x Connecting rod	1st 2nd	25 Turn 90°	250 Turn 90°	18 Turn 90°
Oil nozzle x Cylinder block		9.0	92	80 in.·lbf
Crankshaft bearing cap x Crankshaft	1st 2nd	61 Turn 90°	622 Turn 90°	45 Turn 90°
Rear oil seal retainer x Cylinder block	Bolt Nut	10 9.0	102 92	7.0 80 in.·lbf
Stud bolt x Cylinder block (See page EM−128)	A B C	11 4.5 4.0	112 46 41	8.1 40 in.·lbf 35 in.·lbf
Clamp x Exhaust tail pipe		32	326	24
Heated oxygen sensor (Bank 1, 2) x Front exhaust pipe		44	450	33
Exhaust center pipe x LH front exhaust pipe		48	490	35
Exhaust center pipe x RH front exhaust pipe		43	440	32

ENGINE MECHANICAL (2UZ−FE)

SS0OQ−13

SERVICE DATA

Compression pressure	at 250 rpm STD	1,373 kPa (14.0 kgf/cm^2, 199 psi) or more
	Minimum	1,030 kPa (10.5 kgf/cm^2, 149 psi)
	Difference of pressure between each cylinder	98 kPa (1.0 kgf/cm^2, 14 psi) or less
Valve clearance	at cold Intake	0.15 to 0.25 mm (0.006 to 0.010 in.)
	Exhaust	0.25 to 0.35 mm (0.010 to 0.014 in.)
	Valve clearance adjusting shim No.00	2.000 mm (0.0787 in.)
	No.02	2.020 mm (0.0795 in.)
	No.04	2.040 mm (0.0803 in.)
	No.06	2.060 mm (0.0811 in.)
	No.08	2.080 mm (0.0819 in.)
	No.10	2.100 mm (0.0827 in.)
	No.12	2.120 mm (0.0835 in.)
	No.14	2.140 mm (0.0843 in.)
	No.16	2.160 mm (0.0850 in.)
	No.18	2.180 mm (0.0858 in.)
	No.20	2.200 mm (0.0866 in.)
	No.22	2.220 mm (0.0874 in.)
	No.24	2.240 mm (0.0882 in.)
	No.26	2.260 mm (0.0890 in.)
	No.28	2.280 mm (0.0898 in.)
	No.30	2.300 mm (0.0906 in.)
	No.32	2.320 mm (0.0913 in.)
	No.34	2.340 mm (0.0921 in.)
	No.36	2.360 mm (0.0929 in.)
	No.38	2.380 mm (0.0937 in.)
	No.40	2.400 mm (0.0945 in.)
	No.42	2.420 mm (0.0953 in.)
	No.44	2.440 mm (0.0961 in.)
	No.46	2.460 mm (0.0969 in.)
	No.48	2.480 mm (0.0976 in.)
	No.50	2.500 mm (0.0984 in.)
	No.52	2.520 mm (0.0992 in.)
	No.54	2.540 mm (0.1000 in.)
	No.56	2.560 mm (0.1008 in.)
	No.58	2.580 mm (0.1016 in.)
	No.60	2.600 mm (0.1024 in.)
	No.62	2.620 mm (0.1031 in.)
	No.64	2.640 mm (0.1039 in.)
	No.66	2.660 mm (0.1047 in.)
	No.68	2.680 mm (0.1055 in.)
	No.70	2.700 mm (0.1063 in.)
	No.72	2.720 mm (0.1071 in.)
	No.74	2.740 mm (0.1079 in.)
	No.76	2.760 mm (0.1087 in.)
	No.78	2.780 mm (0.1094 in.)
	No.80	2.800 mm (0.1102 in.)
Ignition timing	w/ Terminals TC and E1 connected of DLC1	5 to15° BTDC @ idle
Idle speed	−	700 ± 50 rpm
Timing belt tensioner	Protrusion from housing end	10.5 to 11.5 mm (0.413 to 0.453 in.)

Cylinder head	Warpage	Maximum	0.10 mm (0.039 in.)
	Valve seat		
	Refacing angle		30°, 45°, 60°
	Contacting angle		45°
	Contacting width		1.0 to 1.4 mm (0.039 to 0.055 in.)
	Valve guide bushing bore diameter	STD	10.285 to 10.306 mm (0.4049 to 0.4057 in.)
		O/S 0.05	10.335 to 10.356 mm (0.4069 to 0.4077 in.)
	Cylinder head bolt thread inside diameter	STD	9.810 to 9.960 mm (0.3862 to 0.3921 in.)
		Minimum	9.700 mm (0.3819 in.)
	Protrusion height	Intake	9.2 to 9.8 mm (0.362 to 0.386 in.)
		Exhaust	8.2 to 8.8 mm (0.323 to 0.346 in.)
Valve guide bushing	Inside diameter		5.510 to 5.530 mm (0.2169 to 0.2374 in.)
	Outside diameter (for repair part)	STD	10.333 to 10.344 mm (0.4068 to 0.4072 in.)
		O/S 0.05	10.383 to 10.394 mm (0.4088 to 0.4092 in.)
Valve	Valve overall length	STD Intake	95.05 mm (3.7421 in.)
		Exhaust	95.10 mm (3.7441 in.)
		Minimum Intake	94.55 mm (3.7224 in.)
		Exhaust	94.60 mm (3.7244 in.)
	Valve face angle		44.5°
	Stem diameter	Intake	5.470 to 5.485 mm (0.2154 to 0.2159 in.)
		Exhaust	5.465 to 5.480 mm (0.2152 to 0.2157 in.)
	Stem oil clearance	STD Intake	0.025 to 0.060 mm (0.0010 to 0.0024 in.)
		Exhaust	0.030 to 0.065 mm (0.0012 to 0.0026 in.)
		Maximum Intake	0.08 mm (0.0031 in.)
		Exhaust	0.10 mm (0.0039 in.)
	Margin thickness	STD	1.0 mm (0.039 in.)
		Minimum	0.5 mm (0.020 in.)
Valve spring	Deviation	Maximum	2.0 mm (0.079 in.)
	Free length		54.1 mm (2.130 in.)
	Installed tension at 35.0 mm (1.378 in.)		210 to 226 N (21.4 to 23.0 kgf, 47.2 to 50.7 lbf)
Valve lifter	Lifter diameter		30.968 to 30.976 mm (1.2192 to 2.2195 in.)
	Lifter bore diameter		31.000 to 31.016 mm (1.2205 to 1.2211 in.)
	Oil clearance	STD	0.024 to 0.050 mm (0.0009 to 0.0020 in.)
		Maximum	0.07 mm (0.0028 in.)
Camshaft	Thrust clearance	STD Intake	0 to 0.040 mm (0 to 0.0016 in.)
		Exhaust	0.030 to 0.070 mm (0.0011 to 0.0028 in.)
		Maximum Intake	0.12 mm (0.0047 in.)
		Exhaust	0.10 mm (0.0039 in.)
	Journal oil clearance	STD	0.030 to 0.071 mm (0.0012 to 0.0028 in.)
		Maximum	0.10 mm (0.0039 in.)
	Timing tube journal oil clearance	STD	0.036 to 0.057 mm (0.0014 to 0.0022 in.)
		Maximum	0.075 mm (0.0030 in.)
	Journal diameter		26.954 to 26.970 mm (1.0612 to 1.0618 in.)
	Timing tube journal diameter	STD	39.955 to 39.964 mm (1.5730 to 1.5734 in.)
	Circle runout		0.03 mm (0.0012 in.)
	Cam lobe height	STD Intake	42.61 to 42.71 mm (1.6776 to 1.6815 in.)
		Exhaust	42.63 to 42.71 mm (1.6783 to 1.6823 in.)
		Minimum Intake	42.46 mm (1.6717 in.)
		Exhaust	42.48 mm (1.6724 in.)
	Camshaft gear backlash	STD	0.020 to 0.200 mm (0.0008 to 0.0079 in.)
		Maximum	0.30 mm (0.0188 in.)
	Camshaft gear spring end free distance		18.2 to 18.8 mm (0.712 to 0.740 in.)
Manifold	Warpage	Maximum Exhaust	0.10 mm (0.0039 in.)

Cylinder block	Cylinder head surface warpage	Maximum	0.07 mm (0.0028 in.)
	Cylinder bore diameter	STD Mark 2	94.010 to 94.023 mm (3.7012 to 3.7017 in.)
		Maximum STD	94.223 mm (3.7096 in.)
		O/S 050	94.723 mm (3.7292 in.)
	Main bearing cap bolt tension portion diameter	STD	10.760 to 10.970 mm (0.4236 to 0.4319 in.)
		Minimum	10.40 mm (0.4094 in.)
Piston and piston ring	Piston diameter	STD Mark 2	93.912 to 93.940 mm (3.6973 to 3.6984 in.)
		O/S 0.50	94.392 to 94.440 mm (3.7162 to 3.7181 in.)
	Piston oil clearance	STD	0.030 to 0.071 mm (0.0012 to 0.0028 in.)
		Maximum	0.13 mm (0.0051 in.)
	Piston ring groove clearance	No.1	0.030 to 0.080 mm (0.0012 to 0.0031 in.)
		No.2	0.020 to 0.060 mm (0.0008 to 0.0024 in.)
	Piston ring end gap	STD No.1	0.300 to 0.400 mm (0.0118 to 0.0157 in.)
		No.2	0.450 to 0.600 mm (0.0177 to 0.0236 in.)
		Oil	0.100 to 0.350 mm (0.0039 to 0.0138 in.)
		Maximum No.1	1.10 mm (0.0433 in.)
		No.2	1.30 mm (0.0512 in.)
		Oil	0.75 mm (0.0295 in.)
Connecting rod	Thrust clearance	STD	0.160 to 0.290 mm (0.0063 to 0.0138 in.)
		Maximum	0.35 mm (0.0138 in.)
	Connecting rod thickness		22.880 to 22.920 mm (0.9008 to 0.9024 in.)
	Connecting rod oil clearance	STD	0.021 to 0.047 mm (0.0008 to 0.0019 in.)
		Maximum	0.059 mm (0.0023 in.)
	Connecting rod bearing center wall thickness (Reference)	Mark 2	1.487 to 1.490 mm (0.0585 to 0.0587 in.)
		Mark 3	1.490 to 1.493 mm (0.0587 to 0.0588 in.)
		Mark 4	1.493 to 1.496 mm (0.0588 to 0.0589 in.)
		Mark 5	1.496 to 1.499 mm (0.0589 to 0.0590 in.)
		Mark 6	1.499 to 1.502 mm (0.0590 to 0.0591 in.)
		Mark 7	1.502 to 1.505 mm (0.0591 to 0.0593 in.)
	Rod bend	Maximum per 100 mm (3.94 in.)	0.05 mm (0.0020 in.)
	Rod twist	Maximum per 100 mm (3.94 in.)	0.15 mm (0.0059 in.)
	Bushing inside diameter		22.005 to 22.014 mm (0.8663 to 0.8667 in.)
	Piston pin diameter		21.997 to 22.009 mm (0.8660 to 0.8664 in.)
	Bushing oil clearance	STD	0.005 to 0.011 mm (0.0002 to 0.0004 in)
		Maximum	0.05 mm (0.0020 in.)
	Connecting rod bolt tension portion diameter	STD	7.200 to 7.300 mm (0.2835 to 0.2874 in.)
		Minimum	7.00 mm (0.2756 in.)
Crankshaft	Thrust clearance	STD	0.020 to 0.220 mm (0.0008 to 0.0087 in.)
		Maximum	0.30 mm (0.0118 in.)
	Thrust washer thickness		2.440 to 2.490 mm (0.0961 to 0.0980 in.)
	Main journal bore diameter on cylinder block (with main bearing)		66.986 to 67.000 mm (2.6372 to 2.6378 in.)
	Main journal oil clearance	STD No.1, No.5	0.028 to 0.046 mm (0.0011 to 0.0018 in.)
		others	0.040 to 0.058 mm (0.0016 to 0.0023 in.)
		Maximum	0.065 mm (0.0026 in.)
	Main journal diameter		66.988 to 67.000 mm (2.6373 to 2.6378 in.)

Crankshaft (cont'd)	Main bearing center wall thickness (Reference)		
	No.1 and No.5	Mark 3	2.487 to 2.490 mm (0.0979 to 0.0980 in.)
		Mark 4	2.490 to 2.493 mm (0.0980 to 0.0981 in.)
		Mark 5	2.493 to 2.496 mm (0.0981 to 0.0983 in.)
		Mark 6	2.496 to 2.499 mm (0.0983 to 0.0984 in.)
		Mark 7	2.499 to 2.502 mm (0.0984 to 0.0985 in.)
	Others	Mark 1	2.481 to 2.484 mm (0.0977 to 0.0978 in.)
		Mark 2	2.484 to 2.487 mm (0.0978 to 0.0979 in.)
		Mark 3	2.487 to 2.490 mm (0.0979 to 0.0980 in.)
		Mark 4	2.490 to 2.493 mm (0.0980 to 0.0981 in.)
		Mark 5	2.493 to 2.496 mm (0.0981 to 0.0983 in.)
	Crank pin diameter		51.982 to 52.000 mm (2.0465 to 2.0472 in.)
	Circle runout	Maximum	0.04 mm (0.0016 in.)
	Main journal taper and out−of−round	Maximum	0.02 mm (0.0008 in.)
	Crank pin taper and out−of−round	Maximum	0.02 mm (0.0008 in.)

SS0OR−14

TORQUE SPECIFICATION

Part tightened		N·m	kgf·cm	ft·lbf
Fan shroud x Radiator assembly		5.5	50	43 in.·lbf
Radiator bracket x Radiator assembly		20	200	15
A/C Compressor x Cylinder block		49	500	36
Generator x Generator bracket		39	400	29
No.1 idler pulley, No.2 idler pulley x Cylinder Block		34.5	350	25
Camshaft timing pulley x Camshaft timing tube		8.1	83	72 in.·lbf
Drive belt tensioner x Cylinder block		16	160	12
Timing belt tensioner x Oil pump		26	270	19
Crankshaft pulley x Crankshaft		245	2,500	181
Fan bracket x Cylinder block	12 mm head 14 mm head	16 32	160 330	12 24
No.2 timing belt cover x Cylinder block		16	160	12
No.3 timing belt cover x Cylinder block, cylinder head		7.5	80	66 in.·lbf
Drive belt idler pulley x Fan bracket		39	400	29
Fluid coupling x Fan bracket		29	296	21
Exhaust manifold x Cylinder head		44	450	33
Cylinder head x Cylinder block	1st 2nd 3rd	40 Turn 90° Turn 90°	408 Turn 90° Turn 90°	30 Turn 90° Turn 90°
Camshaft bearing cap x Cylinder head	Bolt A Others	7.5 16	80 160	66 in.·lbf 12
Cylinder head cover x Cylinder head		6.0	60	53 in.·lbf
Engine hanger x Cylinder head		37	380	27
Front water bypass joint, Rear water bypass joint x Cylinder head		18	185	13
Intake manifold x Cylinder head		18	185	13
Timing belt rear plate x Cylinder head		7.5	80	66 in.·lbf
Drive plate x Crankshaft	1st 2nd	49 Turn 90°	500 Turn 90°	36 Turn 90°
Transmission x Cylinder block		72	730	53
Transmission x No.1 oil pan		37	380	27
Drive plate x Torque converter clutch		48	490	35
Flywheel housing under cover x Transmission		18	185	13
Engine rear mounting bracket x Transmission		65	663	48
Frame crossmember x Rear engine mounting insulator	Bolt A Bolt B	18 72	183 730	13 53
Frame bracket x Engine mounting bracket		38	388	28
PS pump x Cylinder head		62	632	46
Main bearing cap x Cylinder block	1st 2nd	27 Turn 90°	275 Turn 90°	20 Turn 90°
Connecting rod cap x Connecting rod	1st 2nd	24.5 Turn 90°	250 Turn 90°	18 Turn 90°
Rear oil seal retainer x Cylinder block		8.0	80	71 in.·lbf
Engine coolant drain union x Cylinder block		49	500	36
Engine mounting bracket x Cylinder block		36	370	27
Water bypass pipe x Cylinder block		18	185	13

Front exhaust pipe x Exhaust manifold	62	630	46
Center exhaust pipe x Front exhaust pipe	48	489	35
Heated oxygen sensor (Bank 1, 2 sensor 2) x Front exhaust pipe	44	450	32

IGNITION (1GR−FE)

SS1MO−01

SERVICE DATA

Spark plug	Recommended spark plug	NGK made	LFR6C−11
		DENSO made	K20HR−U11
	Electrode gap	Standard	1.0 to 1.1 mm (0.039 to 0.043 in.)
		Maximum	1.46 mm (0.057 in.)
Crankshaft position sensor	Resistance	Cold	1,630 to 2,740 Ω
		Hot	2,065 to 3,225 Ω

SS1MP−01

TORQUE SPECIFICATION

Part tightened	N·m	kgf·cm	ft·lbf
Spark plug x Cylinder head	18	184	13
Ignition coil x Cylinder head cover	10	102	7
V−bank cover	7.5	76	66 in.·lbf
Air cleaner assy	8.0	82	71 in.·lbf
Throttle body bracket x Intake air surge tank	21	214	16
Intake air surge tank x Intake manifold	28	286	21
Surge tank stay x Intake air surge tank	21	214	16
Oil baffle plate x Surge tank stay No. 1	9.0	92	80
Crankshaft position sensor x Cylinder block	10	102	7
Cooler compressor x V−ribbed belt tensioner	25	255	18
Suction hose sub−assy	8.0	82	71 in.·lbf
VVT sensor x Cylinder head	9.0	92	80 in.·lbf

IGNITION (2UZ−FE)

SS0O6−08

SERVICE DATA

Firing order	−		1 − 8 − 4 − 3 − 6 − 5 − 7 − 2
Spark plug	Recommended spark plug	DENSO made	SK20R11
		NGK made	IFR6A11
	Electrode gap		1.0 to 1.1 mm (0.039 to 0.043 in.)
Crankshaft position sensor	Resistance	Cold	1,630 to 2,740 Ω
		Hot	2,065 to 3,225 Ω

SS0O7−06

TORQUE SPECIFICATION

Part tightened	N·m	kgf·cm	ft·lbf
Spark plug x Cylinder head	17.5	180	13
Ignition coil (with igniter) x Cylinder head cover	7.5	76	66 in.·lbf
Camshaft position sensor x LH cylinder head	7.5	76	66 in.·lbf
Crankshaft position sensor x Oil pump	6.5	65	58 in.·lbf

LUBRICATION (1GR−FE)

SS1MM−01

SERVICE DATA

Oil pressure		at idle speed	29 kPa (0.3 kgf·cm^2, 4.3 psi) or more
		at 3,000 rpm	294 to 588 kPa (3.0 to 6.0 kgf·cm^2, 43 to 85 psi)
Oil pump	Tip clearance	Standard	0.06 to 0.16 mm (0.0024 to 0.0063 in.)
		Maximum	0.16 mm (0.0063 in.)
	Side clearance	Standard	0.03 to 0.09 mm (0.0012 to 0.0035 in.)
		Maximum	0.09 mm (0.0035 in.)
	Body clearance	Standard	0.250 to 0.325 mm (0.0098 to 0.0128 in.)
		Maximum	0.325 mm (0.0128 in.)

SS1MN−01

TORQUE SPECIFICATION

Part tightened	N·m	kgf·cm	ft·lbf
Oil pressure switch	15	152	11
Drain plug x Oil pan No. 2	40	408	30
Oil pipe x Timing chain cover	9.0	92	80 in.·lbf
Oil pump cover x Timing chain cover	9.0	92	80 in.·lbf
Relief valve plug x Oil pump cover	49	500	36
Union bolt x Oil filter bracket	68	693	50
Oil filter bracket x Timing chain cover	19	194	14

LUBRICATION (2UZ−FE)

SS0OB−06

SERVICE DATA

Oil pressure		at idle speed	29 kPa (0.3 kgf/cm^2, 4.3 psi) or more
		at 3,000 rpm	294 to 588 kPa (3.0 to 6.0 kgf/cm^2, 43 to 85 psi)
Oil pump	Tip clearance	Standard	0.060 to 0.180 mm (0.0024 to 0.0071 in.)
		Maximum	0.18 mm (0.0071 in.)
	Side clearance	Standard	0.030 to 0.090 mm (0.0012 to 0.0035 in.)
		Maximum	0.09 mm (0.0035 in.)
	Body clearance	Standard	0.250 to 0.325 mm (0.0098 to 0.0128 in.)
		Maximum	0.325 mm (0.0128 in.)

SS0OC−06

TORQUE SPECIFICATION

Part tightened		N·m	kgf·cm	ft·lbf
No.2 oil pan x Drain plug		39	400	29
Oil pump body cover x Oil pump body		10	105	8
Oil pump x Cylinder block	14 mm head	30.5	310	22
	Others	15.5	160	11
Relief valve x Oil pump body		49	500	36
Oil strainer x Cylinder block, Oil pump		7.5	80	66 in.·lbf
No.1 oil pan x Oil pump, Oil seal retainer, Cylinder block	10 mm head	7.5	80	66 in.·lbf
	12 mm head	28	290	21
Oil pan baffle plate x No.1 oil pan		7.5	80	66 in.·lbf
No.2 oil pan x No.1 oil pan		7.5	80	66 in.·lbf
Oil filter bracket x Oil pump		18	185	13
Oil dipstick guide x Cylinder head		15	153	11
Oil cooler x Oil filter bracket		68.6	700	51
Oil nozzle x Cylinder block		9.0	92	80 in.·lbf

MANUAL TRANSMISSION (RA60)

SS1MQ−01

SERVICE DATA

Reverse idle gear thrust clearance		Standard	0.10 to 0.55 mm (0.0039 to 0.0217 in.)
		Maximum	0.55 mm (0.0217 in.)
Reverse idle gear radial clearance		Standard	0.015 to 0.050 mm (0.0006 to 0.0020 in.)
		Maximum	0.050 mm (0.0020 in.)
Input shaft gear thrust clearance		3rd	0.09 to 0.52 mm (0.0035 to 0.0205 in.)
		4th	0.12 to 0.38 mm (0.0047 to 0.0150 in.)
		6th	0.20 to 0.48 mm (0.0079 to 0.0189 in.)
Input shaft gear radial clearance		3rd and 4th	0.015 to 0.067 mm (0.00059 to 0.00264 in.)
		6th	0.015 to 0.065 mm (0.00059 to 0.00256 in.)
Synchronizer ring set No. 3 to 3rd gear clearance		Standard	
		Inner	1.20 to 2.20 mm (0.0472 to 0.0866 in.)
		Middle	0.60 to 1.80 mm (0.0236 to 0.0709 in.)
		Outer	0.80 to 1.80 mm (0.0315 to 0.0709 in.)
		Minimum	
		Inner	1.20 mm (0.0472 in.)
		Middle	0.60 mm (0.0236 in.)
		Outer	0.80 mm (0.0315 in.)
Synchronizer ring No. 3 to 4th gear clearance		Standard	0.70 to 1.50 mm (0.0276 to 0.0591 in.)
		Minimum	0.70 mm (0.0276 in.)
Synchronizer ring No. 3 to 6th gear clearance		Standard	0.70 to 1.50 mm (0.0276 to 0.0591 in.)
		Minimum	0.70 mm (0.0276 in.)
Wide of the hub sleeve − Thickness of the gear shift fork		No. 2 and No. 3	0.26 to 0.84 mm (0.0102 to 0.0331 in.)
Input shaft runout		Maximum	0.03 mm (0.0012 in.)
Input shaft journal diameter	Part		
(See page MT−34)	A	Standard	34.002 to 34.015 mm (1.3387 to 1.3392 in.)
		Minimum	34.002 mm (1.3387 in.)
	B	Standard	44.985 to 45.000 mm (1.7711 to 1.7717 in.)
		Minimum	44.985 mm (1.7711 in.)
	C	Standard	44.985 to 45.000 mm (1.7711 to 1.7717 in.)
		Minimum	44.985 mm (1.7711 in.)
	D	Standard	41.985 to 42.000 mm (1.6530 to 1.6535 in.)
		Minimum	41.985 mm (1.6530 in.)
	E	Standard	32.967 to 32.980 mm (1.2979 to 1.2984 in.)
		Minimum	32.967 mm (1.2979 in.)
Gear inside diameter		3rd gear	
		Standard	51.015 to 51.040 mm (2.0085 to 2.0094 in.)
		Maximum	51.040 mm (2.0094 in.)
		4th gear	
		Standard	51.015 to 51.040 mm (2.0085 to 2.0094 in.)
		Maximum	51.040 mm (2.0094 in.)
		6th gear	
		Standard	51.015 to 51.040 mm (2.0085 to 2.0094 in.)
		Maximum	51.040 mm (2.0094 in.)
3rd gear thrust washer thickness		Standard	7.12 to 7.18 mm (0.2803 to 0.2827 in.)
		Minimum	7.12 mm (0.2803 in.)

Input shaft bearing snap ring thickness	Standard clearance	0.1 mm (0.0039 in.) or less
	Mark	
	A	2.65 to 2.70 mm (0.1043 to 0.1063 in.)
	B	2.70 to 2.75 mm (0.1063 to 0.1083 in.)
	C	2.75 to 2.80 mm (0.1083 to 0.1102 in.)
	D	2.80 to 2.85 mm (0.1102 to 0.1122 in.)
	E	2.85 to 2.90 mm (0.1122 to 0.1142 in.)
	F	2.90 to 2.95 mm (0.1142 to 0.1161 in.)
Clutch hub No. 2 snap ring thickness	Standard clearance	0.1 mm (0.0039 in.) or less
	Mark	
	A	1.77 to 1.82 mm (0.0697 to 0.0717 in.)
	B	1.82 to 1.87 mm (0.0717 to 0.0736 in.)
	C	1.87 to 1.92 mm (0.0726 to 0.0756 in.)
	D	1.92 to 1.97 mm (0.0756 to 0.0776 in.)
	E	1.97 to 2.02 mm (0.0776 to 0.0795 in.)
	F	2.02 to 2.07 mm (0.0795 to 0.0815 in.)
	G	2.07 to 2.12 mm (0.0815 to 0.0835 in.)
3rd gear thrust washer snap ring thickness	Standard clearance	0.1 mm (0.0039 in.) or less
	Mark	
	A	2.07 to 2.12 mm (0.0815 to 0.0835 in.)
	B	2.12 to 2.17 mm (0.0835 to 0.0854 in.)
	C	2.17 to 2.22 mm (0.0854 to 0.0874 in.)
	D	2.22 to 2.27 mm (0.0874 to 0.0894 in.)
	E	2.27 to 2.32 mm (0.0894 to 0.0913 in.)
	F	2.32 to 2.37 mm (0.0913 to 0.0933 in.)
Clutch hub No. 3 snap ring thickness	Standard clearance	0.1 mm (0.0039 in.) or less
	Mark	
	A	2.10 to 2.15 mm (0.0827 to 0.0846 in.)
	B	2.15 to 2.20 mm (0.0846 to 0.0866 in.)
	C	2.20 to 2.25 mm (0.0866 to 0.0886 in.)
	D	2.25 to 2.30 mm (0.0886 to 0.0906 in.)
	E	2.30 to 2.35 mm (0.0906 to 0.0925 in.)
	F	2.35 to 2.40 mm (0.0925 to 0.0945 in.)
	G	2.40 to 2.45 mm (0.0945 to 0.0965 in.)
Output shaft inside diameter	Standard	45.009 to 45.025 mm (1.7720 to 1.7726 in.)
	minimum	45.025 mm (1.7726 in.)
Synchronizer ring to 5th gear clearance	Standard	0.70 to 1.50 mm (0.0276 to 0.0591 in.)
	Minimum	0.70 mm (0.0276 in.)
Counter gear shaft gear thrust clearance	1st and 2nd	0.10 to 0.42 mm (0.0039 to 0.0165 in.)
	Reverse	0.12 to 0.28 mm (0.0047 to 0.0110 in.)
Counter gear shaft gear radial clearance	1st and 2nd	0.015 to 0.067 mm (0.00059 to 0.00264 in.)
	Reverse	0.015 to 0.065 mm (0.00059 to 0.00256 in.)
Synchronizer ring set No. 1 to 1st gear clearance	Standard	
	Inner	1.48 to 2.12 mm (0.0583 to 0.0835 in.)
	Middle	0.68 to 1.92 mm (0.0268 to 0.0756 in.)
	Outer	0.88 to 1.72 mm (0.0346 to 0.0677 in.)
	Minimum	
	Inner	1.48 mm (0.0583 in.)
	Middle	0.68 mm (0.0268 in.)
	Outer	0.88 mm (0.0346 in.)

Synchronizer ring set No. 1 to 2nd gear clearance		Standard	
		Inner	1.48 to 2.12 mm (0.0583 to 0.0835 in.)
		Middle	0.68 to 1.92 mm (0.0268 to 0.0756 in.)
		Outer	0.88 to 1.72 mm (0.0346 to 0.0677 in.)
		Minimum	
		Inner	1.48 mm (0.0583 in.)
		Middle	0.68 mm (0.0268 in.)
		Outer	0.88 mm (0.0346 in.)
Reverse synchronizer ring to reverse gear clearance		Standard	0.70 to 1.30 mm (0.0278 to 0.0512 in.)
		Minimum	0.70 mm (0.0278 in.)
Wide of the hub sleeve − Thickness of the gear shift fork		No. 1	0.15 to 0.35 mm (0.0059 to 0.0138 in.)
		No. 4	0.26 to 0.84 mm (0.0102 to 0.0331 in.)
Counter gear shaft runout		Maximum	0.03 mm (0.0012 in.)
Counter gear shaft journal diameter	Part		
(See page MT−52)	A	Standard	34.002 to 34.015 mm (1.3387 to 1.3392 in.)
		Minimum	34.002 mm (1.3387 in.)
	B	Standard	36.985 to 37.000 mm (1.4561 to 1.4567 in.)
		Minimum	36.985 mm (1.4561 in.)
	C	Standard	47.985 to 78.000 mm (1.8892 to 1.8898 in.)
		Minimum	47.985 mm (1.8892 in.)
	D	Standard	53.985 to 54.000 mm (2.1254 to 2.1260 in.)
		Minimum	53.985 mm (2.1254 in.)
	E	Standard	34.002 to 34.015 mm (1.3387 to 1.3392 in.)
		Minimum	34.002 mm (1.3387 in.)
Gear inside diameter		1st gear	
		Standard	54.015 to 54.040 mm (2.1266 to 2.1276 in.)
		Maximum	54.040 mm (2.1276 in.)
		2nd gear	
		Standard	60.015 to 60.040 mm (2.3628 to 2.3638 in.)
		Maximum	60.040 mm (2.3638 in.)
		Reverse gear	
		Standard	51.015 to 51.040 mm (2.0085 to 2.0094 in.)
		Maximum	51.040 mm (2.0094 in.)
Clutch hub No. 1 snap ring thickness		Standard	0.1 mm (0.0039 in.) or less
		Mark	
		A	2.28 to 2.33 mm (0.0898 to 0.0917 in.)
		B	2.33 to 2.38 mm (0.0917 to 0.0937 in.)
		C	2.38 to 2.43 mm (0.0937 to 0.0957 in.)
		D	2.43 to 2.48 mm (0.0957 to 0.0976 in.)
		E	2.48 to 2.53 mm (0.0976 to 0.0996 in.)
		F	2.53 to 2.58 mm (0.0996 to 0.1016 in.)
		G	2.58 to 2.63 mm (0.1016 to 0.1035 in.)
Counter gear shaft bearing snap ring thickness		Standard	0.1 mm (0.0039 in.) or less
		Mark	
		A	2.35 to 2.40 mm (0.0925 to 0.0945 in.)
		B	2.40 to 2.45 mm (0.0945 to 0.0965 in.)
		C	2.45 to 2.50 mm (0.0965 to 0.0984 in.)
		D	2.50 to 2.55 mm (0.0984 to 0.1004 in.)
		E	2.55 to 2.60 mm (0.1004 to 0.1024 in.)
		F	2.60 to 2.65 mm (0.1024 to 0.1043 in.)
		G	2.65 to 2.70 mm (0.1043 to 0.1063 in.)
		G	2.70 to 2.75 mm (0.1063 to 0.1083 in.)
		J	2.75 to 2.80 mm (0.1083 to 0.1102 in.)
		K	2.80 to 2.85 mm (0.1102 to 0.1122 in.)
		L	2.85 to 2.90 mm (0.1122 to 0.1142 in.)
		M	2.90 to 2.95 mm (0.1142 to 0.1161 in.)

Needle roller bearing inner race snap ring thickness	Standard	0.1 mm (0.0039 in.) or less
	Mark	
	A	2.35 to 2.40 mm (0.0925 to 0.0945 in.)
	B	2.40 to 2.45 mm (0.0945 to 0.0965 in.)
	C	2.45 to 2.50 mm (0.0965 to 0.0984 in.)
	D	2.50 to 2.55 mm (0.0984 to 0.1004 in.)
	E	2.55 to 2.60 mm (0.1004 to 0.1024 in.)
	F	2.60 to 2.65 mm (0.1024 to 0.1043 in.)
	G	2.65 to 2.70 mm (0.1043 to 0.1063 in.)
	G	2.70 to 2.75 mm (0.1063 to 0.1083 in.)
	J	2.75 to 2.80 mm (0.1083 to 0.1102 in.)
	K	2.80 to 2.85 mm (0.1102 to 0.1122 in.)
	L	2.85 to 2.90 mm (0.1122 to 0.1142 in.)
	M	2.90 to 2.95 mm (0.1142 to 0.1161 in.)
Oil seal drive in depth	Front case oil seal	60.0 to 60.8 mm (2.362 to 2.394 in.)
	Extension housing oil seal	−0.5 to 0.5 mm (−0.0197 to 0.0197 in.)

SS1MR−01

TORQUE SPECIFICATION

Part tightened		N·m	kgf·cm	ft·lbf
Transmission x Engine (See page MT−7)	Bolt A	72	730	53
	Bolt B	37	380	27
Transmission cover x Transmission		12	120	9
Engine rear mounting x Transmission		65	660	48
Crossmember x Frame		72	734	53
Engine rear mounting x Crossmember		18	180	13
Starter x Transmission		39	400	29
Starter wire x Starter		9.8	100	7
Clutch release cylinder x Transmission		12	120	9
Clutch accumulator x Transmission		12	120	9
Clutch housing cover x Transmission		12	120	9
Clutch line x Clutch release cylinder		15	155	11
Stabilizer bar bracket x Frame		37	377	27
Filler plug x Transmission		37	380	27
Front exhaust pipe x Exhaust manifold		62	630	46
LH front exhaust pipe x Center exhaust manifold		48	490	35
RH front exhaust pipe x Exhaust pipe support		43	440	32
Manifold stay x Front exhaust pipe and transmission		40	408	30
Propeller shaft x Differential		88	897	65
Center support bearing x Body		40	410	30
Drain plug x Transmission		37	380	27
Control sub assembly x Front case		21	214	15
Back−up lamp switch x Front case		44	449	32
Plug x Front case		39	397	29
Release fork support x Clutch housing		47	480	35
Shift lever housing x Shift & select lever shaft		33	337	24
Control retainer x Exhaust housing		20	204	15
Front case x Middle case		40	408	30
Reverse idler gear shaft set bolt		28	286	21
Transmission oil separator x Middle case		8.5	87	75 in.·lbf
Middle case x Rear case		40	408	30
Lock ball pin x Rear case		24.5	250	18
Bearing lock plate x Rear case		11	115	8
Extension housing x Rear case		29	296	21
Speedometer sensor x Extension housing		13	133	10
Shift fork x Interlock bracket		19.5	200	14
Shift select lever x Shift & select lever cam		33	340	25

PROPELLER SHAFT

SERVICE DATA

SS1MS−01

Propeller shaft	runout		Maximum	0.8 mm (0.031 in.)
Spider bearing axial play	2WD and 4WD front propeller shaft		Maximum	0.05 mm (0.0020 in.)
	4WD rear propeller shaft		Maximum	0 mm (0 in.)
4WD rear propeller shaft	Snap ring thickness	Color	Mark	
		−	9	2.44 to 2.46 mm (0.0961 to 0.0969 in.)
		−	10	2.46 to 2.48 mm (0.0969 to 0.0976 in.)
		−	1	2.28 to 2.30 mm (0.0898 to 0.0906 in.)
		−	2	2.30 to 2.32 mm (0.0906 to 0.0913 in.)
		−	None	2.32 to 2.34 mm (0.0913 to 0.0921 in.)
		Brown	−	2.34 to 2.36 mm (0.0921 to 0.0929 in.)
		Blue	−	2.36 to 2.38 mm (0.0929 to 0.0937 in.)
		−	6	2.38 to 2.40 mm (0.0937 to 0.0945 in.)
		−	7	2.40 to 2.42 mm (0.0945 to 0.0953 in.)
		−	8	2.42 to 2.44 mm (0.0953 to 0.0961 in.)
		−	J	2.18 to 2.20 mm (0.0858 to 0.0866 in.)
		−	K	2.20 to 2.22 mm (0.0866 to 0.0874 in.)
		−	F	2.22 to 2.24 mm (0.0874 to 0.0882 in.)
		−	G	2.24 to 2.26 mm (0.0882 to 0.0890 in.)
		−	H	2.26 to 2.28 mm (0.0890 to 0.0898 in.)
		−	A	2.48 to 2.50 mm (0.0976 to 0.0984 in.)
		−	B	2.50 to 2.52 mm (0.0984 to 0.0992 in.)
		−	C	2.52 to 2.54 mm (0.0992 to 0.1000 in.)
		−	D	2.54 to 2.56 mm (0.1000 to 0.1008 in.)
		−	E	2.56 to 2.58 mm (0.1008 to 0.1016 in.)
2WD and 4WD front propeller shaft	Snap ring thickness		Color	
			Blue	1.638 mm (0.0645 in.)
			Yellow	1.588 mm (0.0625 in.)
			Silver	1.537 mm (0.0605 in.)
			Copper	1.511 mm (0.0595 in.)
			Black	1.486 mm (0.0585 in.)
			Red	1.435 mm (0.0565 in.)
			Green	1.384 mm (0.0545 in.)

SS07Z−06

TORQUE SPECIFICATION

Part tightened		N·m	kgf·cm	ft·lbf
PROPELLER SHAFT ASSEMBLY (2WD)				
Center support bearing x Body		40	410	30
Propeller shaft x Differential		88	897	65
Intermediate shaft x Center support bearing x Center yoke	1st	181	1,845	133
	2nd	Loosen nut		
	3rd	82	835	60
PROPELLER SHAFT ASSEMBLY (4WD)				
Rear propeller shaft x Rear differential		88	897	65
Rear propeller shaft x Transfer		88	897	65
Front propeller shaft x Front differential		88	897	65
Front propeller x Transfer		88	897	65
Center support bearing x Body		40	410	30
Intermediate shaft x Center support bearing x Companion flange	1st	181	1,845	133
	2nd	Loosen nut		
	3rd	82	835	60

SUPPLEMENTAL RESTRAINT SYSTEM

TORQUE SPECIFICATION

SS08D−04

Part tightened	N·m	kgf·cm	ft·lbf
STEERING WHEEL PAD AND SPIRAL CABLE			
Steering wheel set nut	50	510	37
Steering wheel pad set screw (Torx® screw)	8.8	90	78 in.·lbf
FRONT PASSENGER AIRBAG ASSEMBLY			
Front passenger airbag assembly x Instrument panel	5.0	51	44 in.·lbf
Front passenger airbag assembly x Instrument panel	20	204	15
SIDE AIRBAG ASSEMBLY (Power Adjuster Type)			
Front seat x Body	37	377	27
Front seat inner belt x Front seat	42	428	31
Seatback cover bracket x Seatback frame	5.5	56	49 in.·lbf
Armrest assembly x Front seat	37	377	27
SIDE AIRBAG ASSEMBLY (Manual Adjuster Type)			
Front seat x Body	37	377	27
Front seat inner belt x Front seat	42	428	31
Seatback cover bracket x Seatback frame	5.5	56	49 in.·lbf
Armrest assembly x Front seat	37	377	27
SIDE AIRBAG ASSEMBLY (Passenger Side of Split Type)			
Front seat x Body	37	377	27
Front seat center belt x Front seat	42	428	31
Seatback cover bracket x Seatback frame	5.5	56	49 in.·lbf
Armrest assembly x Front seat	20	204	15
CURTAIN SHIELD AIRBAG ASSEMBLY			
Curtain shield airbag assembly x Body	9.8	100	7
AIRBAG SENSOR ASSEMBLY			
Airbag sensor assembly x Body	17.5	179	13
FRONT AIRBAG SENSOR			
Front airbag sensor x Body	17.5	179	13
SIDE AIRBAG SENSOR ASSEMBLY			
Side airbag sensor assembly x Body	17.5	179	13
CURTAIN SHIELD AIRBAG SENSOR ASSEMBLY			
Curtain shield airbag sensor assembly x Body	17.5	179	13
SEAT POSITION SENSOR ASSEMBLY (For Driver Seat)			
Seat position sensor assembly x Front seat	8.0	82	71 in.·lbf
SEAT POSITION SENSOR (For Front Passenger Seat)			
Seat position sensor x Front seat	8.0	82	71 in.·lbf
OCCUPANT CLASSIFICATION ECU (Except Separate Seat)			
Occupant classification ECU x Front seat	3.0	30	27 in.·lbf
SEAT BELT TENSION SENSOR (Except Separate Seat)			
Front seat inner belt RH x Front seat (Split seat)	42	430	32
Front seat outer belt floor anchor RH x Body (Bench seat)	42	430	32

SUSPENSION AND AXLE

SS051−14

SERVICE DATA

Cold tire inflation pressure	● B, C−cab type		
	Tire size: P245/70R16	Front	200 kPa (2.0 kgf/cm^2, 29 psi)
		Rear	240 kPa (2.4 kgf/cm^2, 35 psi)
	Tire size: P265/70R16	Front	180 kPa (1.8 kgf/cm^2, 26 psi)
		Rear	200 kPa (2.0 kgf/cm^2, 29 psi)
	Tire size: P265/70R16*5	Front	200 kPa (2.0 kgf/cm^2, 29 psi)
		Rear	210 kPa (2.1 kgf/cm^2, 30 psi)
	Tire size: P265/65R17	Front	200 kPa (2.0 kgf/cm^2, 29 psi)
		Rear	220 kPa (2.2 kgf/cm^2, 32 psi)
	● D−cab type		
	Tire size: P245/70R16	Front	220 kPa (2.2 kgf/cm^2, 32 psi)
		Rear	240 kPa (2.4 kgf/cm^2, 35 psi)
	Tire size: P265/70R16	Front	200 kPa (2.0 kgf/cm^2, 29 psi)
		Rear	220 kPa (2.2 kgf/cm^2, 32 psi)
	Tire size: P265/70R16*5	Front	220 kPa (2.2 kgf/cm^2, 32 psi)
		Rear	230 kPa (2.3 kgf/cm^2, 33 psi)
	Tire size: P265/65R17	Front	200 kPa (2.0 kgf/cm^2, 29 psi)
		Rear	220 kPa (2.2 kgf/cm^2, 32 psi)
Front wheel alignment	● Vehicle height (B−cab for U.S.A.)		
	GSK30L−TRFDKA		
	Tire size: P245/70R16	Front: A*1 − B*2	75.2 mm (2.961 in.)
		Rear: C*3 − D*4	−50.8 mm (−2.055 in.)
	GSK30L−TRBDKA		
	Tire size: P245/70R16	Front: A*1 − B*2	77.9 mm (3.067 in.)
		Rear: C*3 − D*4	−50.2 mm (−1.976 in.)
	UCK30L−TRBDKA		
	Tire size: P245/70R16	Front: A*1 − B*2	77.2 mm (3.039 in.)
		Rear: C*3 − D*4	−54.5 mm (−2.146 in.)
	UCK40L−TRBDKA		
	Tire size: P245/70R16	Front: A*1 − B*2	53.5 mm (2.106 in.)
		Rear: C*3 − D*4	−68.1 mm (−2.681 in.)
	● Vehicle height (D−cab for U.S.A.)		
	UCK31L−PRBSKA		
	Tire size: P245/70R16	Front: A*1 − B*2	68.0 mm (2.677 in.)
		Rear: C*3 − D*4	−52.2 mm (−2.055 in.)
	Tire size: P265/70R16	Front: A*1 − B*2	68.3 mm (2.689 in.)
		Rear: C*3 − D*4	−51.4 mm (−2.024 in.)
	Tire size: P265/70R16 (B2BB (ORP))	Front: A*1 − B*2	65.8 mm (2.591 in.)
		Rear: C*3 − D*4	−51.6 mm (−2.031 in.)
	Tire size: P265/65R17	Front: A*1 − B*2	67.9 mm (2.673 in.)
		Rear: C*3 − D*4	−52.7 mm (−2.075 in.)
	UCK31L−PRBLKA		
	Tire size: P265/70R16	Front: A*1 − B*2	68.1 mm (2.681 in.)
		Rear: C*3 − D*4	−51.5 mm (−2.028 in.)
	Tire size: P265/70R16 (B2BB (ORP))	Front: A*1 − B*2	65.6 mm (2.583 in.)
		Rear: C*3 − D*4	−51.6 mm (−2.031 in.)
	Tire size: P265/65R17	Front: A*1 − B*2	67.6 mm (2.661 in.)
		Rear: C*3 − D*4	−52.7 mm (−2.075 in.)

Front wheel alignment	UCK41L−PRBSKA		
	Tire size: P245/70R16	Front: A*1 – B*2	56.7 mm (2.232 in.)
		Rear: C*3 – D*4	−57.1 mm (−2.248 in.)
	Tire size: P265/70R16	Front: A*1 – B*2	57.0 mm (2.244 in.)
		Rear: C*3 – D*4	−56.3 mm (−2.217 in.)
	Tire size: P265/70R16 (B2BB (ORP))	Front: A*1 – B*2	54.5 mm (2.146 in.)
		Rear: C*3 – D*4	−57.9 mm (−2.280 in.)
	Tire size: P265/65R17	Front: A*1 – B*2	56.5 mm (2.224 in.)
		Rear: C*3 – D*4	−57.6 mm (−2.268 in.)
	UCK41L−PRBLKA		
	Tire size: P265/70R16	Front: A*1 – B*2	57.0 mm (2.244 in.)
		Rear: C*3 – D*4	−56.6 mm (−2.228 in.)
	Tire size: P265/70R16 (B2BB (ORP))	Front: A*1 – B*2	54.6 mm (2.150 in.)
		Rear: C*3 – D*4	−58.2 mm (−2.291 in.)
	Tire size: P265/65R17	Front: A*1 – B*2	56.5 mm (2.224 in.)
		Rear: C*3 – D*4	−57.9 mm (−2.280 in.)
	● Vehicle height (C−cab for U.S.A. 2WD models)		
	GSK30L−ARFSKA		
	Tire size: P245/70R16	Front: A*1 – B*2	62.4 mm (2.457 in.)
		Rear: C*3 – D*4	−63.1 mm (−2.484 in.)
	Tire size: P265/70R16	Front: A*1 – B*2	62.4 mm (2.457 in.)
		Rear: C*3 – D*4	−62.9 mm (−2.476 in.)
	GSK30L−ARBSKA		
	Tire size: P245/70R16	Front: A*1 – B*2	64.9 mm (2.555 in.)
		Rear: C*3 – D*4	−62.4 mm (−2.457 in.)
	Tire size: P265/70R16	Front: A*1 – B*2	65.0 mm (2.559 in.)
		Rear: C*3 – D*4	−62.3 mm (−2.453 in.)
	UCK30L−ARBSKA		
	Tire size: P245/70R16	Front: A*1 – B*2	73.2 mm (2.882 in.)
		Rear: C*3 – D*4	−50.0 mm (−1.969 in.)
	Tire size: P265/70R16	Front: A*1 – B*2	73.2 mm (2.882 in.)
		Rear: C*3 – D*4	−49.8 mm (−1.961 in.)
	Tire size: P265/70R16 (B2BB (ORP))	Front: A*1 – B*2	71.4 mm (2.811 in.)
		Rear: C*3 – D*4	−50.9 mm (−2.004 in.)
	Tire size: P265/65R17	Front: A*1 – B*2	72.9 mm (2.870 in.)
		Rear: C*3 – D*4	−50.8 mm (−2.000 in.)
	Tire size: P265/65R17 (B2BC (SPORT))	Front: A*1 – B*2	83.5 mm (3.287 in.)
		Rear: C*3 – D*4	−40.6 mm (−1.598 in.)
	UCK30L−ASBLKA		
	Tire size: P265/70R16	Front: A*1 – B*2	72.0 mm (2.835 in.)
		Rear: C*3 – D*4	−54.5 mm (−2.146 in.)
	Tire size: P265/70R16 (B2BB (ORP))	Front: A*1 – B*2	70.0 mm (2.756 in.)
		Rear: C*3 – D*4	−55.6 mm (−2.189 in.)
	Tire size: P265/65R17	Front: A*1 – B*2	71.6 mm (2.819 in.)
		Rear: C*3 – D*4	−55.5 mm (−2.185 in.)
	Tire size: P265/65R17 (B2BC (SPORT))	Front: A*1 – B*2	82.0 mm (3.228 in.)
		Rear: C*3 – D*4	−44.7 mm (−1.760 in.)

*1: Ground clearance of the front drive shaft center
*2: Ground clearance of the front adjusting cam bolt center
*3: Ground clearance of the rear axle shaft center
*4: Ground clearance of the leaf spring front side bushing center
*5: Off−road package

Front wheel alignment	UCK30L−ASBSKA		
	Tire size: P265/70R16	Front: A*1 – B*2	70.4 mm (2.772 in.)
		Rear: C*3 – D*4	−24.8 mm (−0.976 in.)
	Tire size: P265/70R16 (B2BB (ORP))	Front: A*1 – B*2	68.6 mm (2.701 in.)
		Rear: C*3 – D*4	−25.8 mm (−1.016 in.)
	Tire size: P265/65R17	Front: A*1 – B*2	70.1 mm (2.760 in.)
		Rear: C*3 – D*4	−25.7 mm (−1.012 in.)
	Tire size: P265/65R17 (B2BC (SPORT))	Front: A*1 – B*2	81.7 mm (3.217 in.)
		Rear: C*3 – D*4	−25.3 mm (−0.996 in.)
	UCK30L−ASBSKA		
	Tire size: P265/70R16	Front: A*1 – B*2	69.2 mm (2.724 in.)
		Rear: C*3 – D*4	−29.5 mm (−1.161 in.)
	Tire size: P265/70R16 (B2BB (ORP))	Front: A*1 – B*2	67.2 mm (2.646 in.)
		Rear: C*3 – D*4	−30.6 mm (−1.205 in.)
	Tire size: P265/65R17	Front: A*1 – B*2	68.8 mm (2.709 in.)
		Rear: C*3 – D*4	−30.4 mm (−1.197 in.)
	Tire size: P265/65R17 (B2BC (SPORT))	Front: A*1 – B*2	80.3 mm (3.161 in.)
		Rear: C*3 – D*4	−29.3 mm (−1.154 in.)
	● Vehicle height (C−cab for U.S.A. 4WD models)		
	UCK40L−ARBSKA		
	Tire size: P245/70R16	Front: A*1 – B*2	48.0 mm (1.890 in.)
		Rear: C*3 – D*4	−67.1 mm (−2.642 in.)
	Tire size: P265/70R16	Front: A*1 – B*2	48.1 mm (1.894 in.)
		Rear: C*3 – D*4	−66.9 mm (−2.634 in.)
	Tire size: P265/70R16 (B2BB (ORP))	Front: A*1 – B*2	74.3 mm (2.925 in.)
		Rear: C*3 – D*4	−62.3 mm (−2.453 in.)
	Tire size: P265/65R17	Front: A*1 – B*2	47.7 mm (1.878 in.)
		Rear: C*3 – D*4	−67.9 mm (−2.673 in.)
	UCK40L−ARBLKA		
	Tire size: P265/70R16	Front: A*1 – B*2	47.3 mm (1.862 in.)
		Rear: C*3 – D*4	−71.8 mm (−2.827 in.)
	Tire size: P265/70R16 (B2BB (ORP))	Front: A*1 – B*2	73.3 mm (2.886 in.)
		Rear: C*3 – D*4	−67.2 mm (−2.646 in.)
	Tire size: P265/65R17	Front: A*1 – B*2	46.9 mm (1.846 in.)
		Rear: C*3 – D*4	−72.8 mm (−2.866 in.)
	UCK40L−ASBSKA		
	Tire size: P265/70R16	Front: A*1 – B*2	44.5 mm (1.752 in.)
		Rear: C*3 – D*4	−40.9 mm (−1.610 in.)
	Tire size: P265/70R16 (B2BB (ORP))	Front: A*1 – B*2	70.7 mm (2.783 in.)
		Rear: C*3 – D*4	−36.3 mm (−1.429 in.)
	Tire size: P265/65R17	Front: A*1 – B*2	44.1 mm (1.736 in.)
		Rear: C*3 – D*4	−41.9 mm (−1.650 in.)
	UCK40L−ASBLKA		
	Tire size: P265/70R16	Front: A*1 – B*2	44.2 mm (1.740 in.)
		Rear: C*3 – D*4	−44.7 mm (−1.760 in.)
	Tire size: P265/70R16 (B2BB (ORP))	Front: A*1 – B*2	70.3 mm (2.768 in.)
		Rear: C*3 – D*4	−40.1 mm (−1.579 in.)
	Tire size: P265/65R17	Front: A*1 – B*2	43.8 mm (1.724 in.)
		Rear: C*3 – D*4	−45.7 mm (−1.799 in.)

*1: Ground clearance of the front drive shaft center
*2: Ground clearance of the front adjusting cam bolt center
*3: Ground clearance of the rear axle shaft center
*4: Ground clearance of the leaf spring front side bushing center

Front wheel alignment	● Vehicle height (For CANADA)		
	GSK30L−TRBDKK		
	Tire size: P245/70R16	Front: A*1 – B*2	75.2 mm (2.961 in.)
		Rear: C*3 – D*4	−50.8 mm (−2.000 in.)
	UCK40L−TRBDKK		
	Tire size: P245/70R16	Front: A*1 – B*2	51.5 mm (2.028 in.)
		Rear: C*3 – D*4	−69.0 mm (−2.717 in.)
	UCK30L−ARBSKK		
	Tire size: P245/70R16	Front: A*1 – B*2	74.9 mm (2.949 in.)
		Rear: C*3 – D*4	−49.1 mm (−1.933 in.)
	Tire size: P265/70R16	Front: A*1 – B*2	75.0 mm (2.953 in.)
		Rear: C*3 – D*4	−48.9 mm (−1.925 in.)
	Tire size: P265/65R17	Front: A*1 – B*2	72.1 mm (2.839 in.)
		Rear: C*3 – D*4	−56.3 mm (−2.217 in.)
	UCK40L−ARBSKK		
	Tire size: P245/70R16	Front: A*1 – B*2	49.3 mm (1.941 in.)
		Rear: C*3 – D*4	−74.2 mm (−2.921 in.)
	Tire size: P265/70R16	Front: A*1 – B*2	49.4 mm (1.945 in.)
		Rear: C*3 – D*4	−74.0 mm (−2.913 in.)
	Tire size: P265/70R16 (B2BB (ORP))	Front: A*1 – B*2	75.6 mm (2.977 in.)
		Rear: C*3 – D*4	−69.3 mm (−2.728 in.)
	Tire size: P265/65R17	Front: A*1 – B*2	49.0 mm (1.929 in.)
		Rear: C*3 – D*4	−75.0 mm (−2.953 in.)
	UCK40L−ARBLKK		
	Tire size: P265/70R16	Front: A*1 – B*2	48.5 mm (1.909 in.)
		Rear: C*3 – D*4	−78.7 mm (−3.098 in.)
	Tire size: P265/70R16 (B2BB (ORP))	Front: A*1 – B*2	74.7 mm (2.941 in.)
		Rear: C*3 – D*4	−74.0 mm (−2.913 in.)
	Tire size: P265/65R17	Front: A*1 – B*2	48.1 mm (1.894 in.)
		Rear: C*3 – D*4	−79.7 mm (−3.138 in.)
	UCK31L−PRBSKK		
	Tire size: P245/70R16	Front: A*1 – B*2	69.6 mm (2.740 in.)
		Rear: C*3 – D*4	−50.5 mm (−1.988 in.)
	Tire size: P265/70R16	Front: A*1 – B*2	70.0 mm (2.756 in.)
		Rear: C*3 – D*4	−49.7 mm (−1.957 in.)
	Tire size: P265/65R17	Front: A*1 – B*2	69.5 mm (2.736 in.)
		Rear: C*3 – D*4	−51.0 mm (−2.008 in.)
	UCK41L−PRBSKK		
	Tire size: P245/70R16	Front: A*1 – B*2	56.5 mm (2.224 in.)
		Rear: C*3 – D*4	−55.6 mm (−2.189 in.)
	Tire size: P265/70R16	Front: A*1 – B*2	56.8 mm (2.236 in.)
		Rear: C*3 – D*4	−54.8 mm (−2.157 in.)
	Tire size: P265/70R16 (B2BB (ORP))	Front: A*1 – B*2	54.4 mm (2.142 in.)
		Rear: C*3 – D*4	−56.4 mm (−2.220 in.)
	Tire size: P265/65R17	Front: A*1 – B*2	56.3 mm (2.217 in.)
		Rear: C*3 – D*4	−56.1 mm (−2.209 in.)

*1: Ground clearance of the front drive shaft center
*2: Ground clearance of the front adjusting cam bolt center
*3: Ground clearance of the rear axle shaft center
*4: Ground clearance of the leaf spring front side bushing center

Front wheel alignment	UCK41L−PRBLKK		
	Tire size: P265/70R16	Front: A*1 – B*2	57.4 mm (2.260 in.)
		Rear: C*3 – D*4	−54.1 mm (−2.130 in.)
	Tire size: P265/70R16 (B2BB (ORP))	Front: A*1 – B*2	55.0 mm (2.165 in.)
		Rear: C*3 – D*4	−55.7 mm (−2.193 in.)
	Tire size: P265/65R17	Front: A*1 – B*2	56.9 mm (2.240 in.)
		Rear: C*3 – D*4	−55.5 mm (−2.185 in.)

*1: Ground clearance of the front drive shaft center
*2: Ground clearance of the front adjusting cam bolt center
*3: Ground clearance of the rear axle shaft center
*4: Ground clearance of the leaf spring front side bushing center

Front wheel alignment	● Camber (B−cab for U.S.A.)	Right−left error: 30' (0.5°) or less
	GSK30L−TRFDKA Tire size: P245/70R16	−0°08'±45' (−0.14°±0.75°)
	GSK30L−TRBDKA Tire size: P245/70R16	−0°10'±45' (−0.18°±0.75°)
	UCK30L−TRBDKA Tire size: P245/70R16	−0°10'±45' (−0.16°±0.75°)
	UCK40L−TRBDKA Tire size: P245/70R16	0°11'±45' (0.19°±0.75°)
	● Camber (D−cab for U.S.A.)	Right−left error: 30' (0.5°) or less
	UCK31L−PRBSKA Tire size: P245/70R16 Tire size: P265/70R16 Tire size: P265/70R16 (B2BB (ORP)) Tire size: P265/65R17	 −0°02'±45' (−0.04°±0.75°) −0°02'±45' (−0.04°±0.75°) −0°01'±45' (−0.01°±0.75°) −0°02'±45' (−0.04°±0.75°)
	UCK31L−PRBLKA Tire size: P265/70R16 Tire size: P265/70R16 (B2BB (ORP)) Tire size: P265/65R17	 −0°02'±45' (−0.03°±0.75°) 0°00'±45' (0.00°±0.75°) −0°02'±45' (−0.03°±0.75°)
	UCK41L−PRBSKA Tire size: P245/70R16 Tire size: P265/70R16 Tire size: P265/70R16 (B2BB (ORP)) Tire size: P265/65R17	 0°08'±45' (0.13°±0.75°) 0°08'±45' (0.13°±0.75°) 0°09'±45' (0.15°±0.75°) 0°08'±45' (0.13°±0.75°)
	UCK41L−PRBLKA Tire size: P265/70R16 Tire size: P265/70R16 (B2BB (ORP)) Tire size: P265/65R17	 0°08'±45' (0.13°±0.75°) 0°09'±45' (0.15°±0.75°) 0°08'±45' (0.13°±0.75°)
	● Camber (C−cab for U.S.A. 2WD models)	Right−left error: 30' (0.5°) or less
	GSK30L−ARFSKA Tire size: P245/70R16 Tire size: P265/70R16	 0°04'±45' (0.07°±0.75°) 0°04'±45' (0.07°±0.75°)
	GSK30L−ARBSKA Tire size: P245/70R16 Tire size: P265/70R16	 0°01'±45' (0.03°±0.75°) 0°01'±45' (0.03°±0.75°)
	UCK30L−ARBSKA Tire size: P245/70R16 Tire size: P265/70R16 Tire size: P265/70R16 (B2BB (ORP)) Tire size: P265/65R17 Tire size: P265/65R17 (B2BC (SPORT))	 −0°07'±45' (−0.11°±0.75°) −0°07'±45' (−0.11°±0.75°) −0°08'±45' (−0.14°±0.75°) −0°07'±45' (−0.11°±0.75°) −0°19'±45' (−0.31°±0.75°)
	UCK30L−ASBLKA Tire size: P265/70R16 Tire size: P265/70R16 (B2BB (ORP)) Tire size: P265/65R17 Tire size: P265/65R17 (B2BC (SPORT))	 −0°05'±45' (−0.08°±0.75°) −0°03'±45' (−0.05°±0.75°) −0°05'±45' (−0.08°±0.75°) −0°16'±45' (−0.27°±0.75°)
	UCK30L−ASBSKA Tire size: P265/70R16 Tire size: P265/70R16 (B2BB (ORP)) Tire size: P265/65R17 Tire size: P265/65R17 (B2BC (SPORT))	 −0°07'±45' (−0.11°±0.75°) −0°05'±45' (−0.08°±0.75°) −0°07'±45' (−0.11°±0.75°) −0°19'±45' (−0.31°±0.75°)

Front wheel alignment	UCK30L−ASBLKA Tire size: P265/70R16 Tire size: P265/70R16 (B2BB (ORP)) Tire size: P265/65R17 Tire size: P265/65R17 (B2BC (SPORT))	 −0°05'±45' (−0.08°±0.75°) −0°03'±45' (−0.05°±0.75°) −0°05'±45' (−0.08°±0.75°) −0°16'±45' (−0.27°±0.75°)
	● Camber (C−cab for U.S.A. 4WD models)	Right−left error: 30' (0.5°) or less
	UCK40L−ARBSKA Tire size: P245/70R16 Tire size: P265/70R16 Tire size: P265/70R16 (B2BB (ORP)) Tire size: P265/65R17	 0°14'±45' (0.24°±0.75°) 0°14'±45' (0.24°±0.75°) −0°06'±45' (−0.10°±0.75°) 0°14'±45' (0.24°±0.75°)
	UCK40L−ARBLKA Tire size: P265/70R16 Tire size: P265/70R16 (B2BB (ORP)) Tire size: P265/65R17	 0°16'±45' (0.26°±0.75°) −0°02'±45' (−0.03°±0.75°) 0°16'±45' (0.26°±0.75°)
	UCK40L−ASBSKA Tire size: P265/70R16 Tire size: P265/70R16 (B2BB (ORP)) Tire size: P265/65R17	 0°15'±45' (0.25°±0.75°) −0°05'±45' (−0.09°±0.75°) 0°15'±45' (0.25°±0.75°)
	UCK40L−ASBLKA Tire size: P265/70R16 Tire size: P265/70R16 (B2BB (ORP)) Tire size: P265/65R17	 0°16'±45' (0.26°±0.75°) −0°04'±45' (−0.06°±0.75°) 0°16'±45' (0.26°±0.75°)
	● Camber (For CANADA)	Right−left error: 30' (0.5°) or less
	GSK30L−TRBDKK Tire size: P245/70R16	 −0°08'±45' (−0.14°±0.75°)
	UCK40L−TRBDKK Tire size: P245/70R16	 0°13'±45' (0.21°±0.75°)
	UCK30L−ARBSKK Tire size: P245/70R16 Tire size: P265/70R16 Tire size: P265/65R17	 −0°08'±45' (−0.14°±0.75°) −0°08'±45' (−0.14°±0.75°) −0°08'±45' (−0.14°±0.75°)
	UCK40L−ARBSKK Tire size: P245/70R16 Tire size: P265/70R16 Tire size: P265/70R16 (B2BB (ORP)) Tire size: P265/65R17	 0°14'±45' (0.24°±0.75°) 0°14'±45' (0.24°±0.75°) −0°07'±45' (−0.11°±0.75°) 0°14'±45' (0.24°±0.75°)
	UCK40L−ARBLKK Tire size: P265/70R16 Tire size: P265/70R16 (B2BB (ORP)) Tire size: P265/65R17	 0°15'±45' (0.25°±0.75°) −0°05'±45' (−0.09°±0.75°) 0°15'±45' (0.25°±0.75°)
	UCK31L−PRBSKK Tire size: P245/70R16 Tire size: P265/70R16 Tire size: P265/65R17	 −0°04'±45' (−0.06°±0.75°) −0°04'±45' (−0.06°±0.75°) −0°04'±45' (−0.06°±0.75°)
	UCK41L−PRBSKK Tire size: P245/70R16 Tire size: P265/70R16 Tire size: P265/70R16 (B2BB (ORP)) Tire size: P265/65R17	 0°08'±45' (0.13°±0.75°) 0°08'±45' (0.13°±0.75°) 0°09'±45' (0.15°±0.75°) 0°08'±45' (0.13°±0.75°)
	UCK41L−PRBLKK Tire size: P265/70R16 Tire size: P265/70R16 (B2BB (ORP)) Tire size: P265/65R17	 0°07'±45' (0.12°±0.75°) 0°08'±45' (0.14°±0.75°) 0°07'±45' (0.12°±0.75°)

Front wheel alignment	● Caster (B−cab for U.S.A.)	Right−left error: 30' (0.5°) or less
	GSK30L−TRFDKA Tire size: P245/70R16	2°00'±45' (2.00°±0.75°)
	GSK30L−TRBDKA Tire size: P245/70R16	2°03'±45' (2.05°±0.75°)
	UCK30L−TRBDKA Tire size: P245/70R16	1°56'±45' (1.93°±0.75°)
	UCK40L−TRBDKA Tire size: P245/70R16	1°25'±45' (1.42°±0.75°)
	● Caster (D−cab for U.S.A.)	Right−left error: 30' (0.5°) or less
	UCK31L−PRBSKA Tire size: P245/70R16 Tire size: P265/70R16 Tire size: P265/70R16 (B2BB (ORP)) Tire size: P265/65R17	 2°01'±45' (2.02°±0.75°) 2°04'±45' (2.06°±0.75°) 2°09'±45' (2.15°±0.75°) 2°10'±45' (2.16°±0.75°)
	UCK31L−PRBLKA Tire size: P265/70R16 Tire size: P265/70R16 (B2BB (ORP)) Tire size: P265/65R17	 2°04'±45' (2.06°±0.75°) 2°08'±45' (2.14°±0.75°) 2°09'±45' (2.15°±0.75°)
	UCK41L−PRBSKA Tire size: P245/70R16 Tire size: P265/70R16 Tire size: P265/70R16 (B2BB (ORP)) Tire size: P265/65R17	 1°52'±45' (1.86°±0.75°) 1°47'±'45 (1.79°±0.75°) 1°52'±45' (1.86°±0.75°) 1°54'±45' (1.90°±0.75°)
	UCK41L−PRBLKA Tire size: P265/70R16 Tire size: P265/70R16 (B2BB (ORP)) Tire size: P265/65R17	 1°47'±45' (1.79°±0.75°) 1°51'±45' (1.85°±0.75°) 1°53'±45' (1.89°±0.75°)
	● Caster (C−cab for U.S.A. 2WD models)	Right−left error: 30' (0.5°) or less
	GSK30L−ARFSKA Tire size: P245/70R16 Tire size: P265/70R16	 1°32'±45' (1.54°±0.75°) 1°41'±45' (1.68°±0.75°)
	GSK30L−ARBSKA Tire size: P245/70R16 Tire size: P265/70R16	 1°35'±45' (1.59°±0.75°) 1°43'±45' (1.71°±0.75°)
	UCK30L−ARBSKA Tire size: P245/70R16 Tire size: P265/70R16 Tire size: P265/70R16 (B2BB (ORP)) Tire size: P265/65R17 Tire size: P265/65R17 (B2BC (SPORT))	 2°02'±45' (2.03°±0.75°) 2°05'±45' (2.09°±0.75°) 2°08'±45' (2.13°±0.75°) 2°10'±45' (2.16°±0.75°) 2°30'±45' (2.50°±0.75°)
	UCK30L−ASBLKA Tire size: P265/70R16 Tire size: P265/70R16 (B2BB (ORP)) Tire size: P265/65R17 Tire size: P265/65R17 (B2BC (SPORT))	 1°58'±45' (1.96°±0.75°) 1°59'±45' (1.99°±0.75°) 2°02'±45' (2.03°±0.75°) 2°23'±45' (2.38°±0.75°)
	UCK30L−ASBSKA Tire size: P265/70R16 Tire size: P265/70R16 (B2BB (ORP)) Tire size: P265/65R17 Tire size: P265/65R17 (B2BC (SPORT))	 2°40'±45' (2.66°±0.75°) 2°41'±45' (2.69°±0.75°) 2°44'±45' (2.73°±0.75°) 2°51'±45' (2.85°±0.75°)

Front wheel alignment	UCK30L−ASBLKA Tire size: P265/70R16 Tire size: P265/70R16 (B2BB (ORP)) Tire size: P265/65R17 Tire size: P265/65R17 (B2BC (SPORT))	 2°31'±45' (2.52°±0.75°) 2°34'±45' (2.56°±0.75°) 2°36'±45' (2.60°±0.75°) 2°44'±45' (2.73°±0.75°)
	● Caster (C−cab for U.S.A. 4WD models)	Right−left error: 30' (0.5°) or less
	UCK40L−ARBSKA Tire size: P245/70R16 Tire size: P265/70R16 Tire size: P265/70R16 (B2BB (ORP)) Tire size: P265/65R17	 1°26'±45' (1.43°±0.75°) 1°25'±45' (1.42°±0.75°) 1°52'±45' (1.86°±0.75°) 1°30'±45' (1.50°±0.75°)
	UCK40L ARBLKA Tire size: P265/70R16 Tire size: P265/70R16 (B2BB (ORP)) Tire size: P265/65R17	 1°17'±45' (1.28°±0.75°) 1°43'±45' (1.72°±0.75°) 1°22'±45' (1.36°±0.75°)
	UCK40L−ASBSKA Tire size: P265/70R16 Tire size: P265/70R16 (B2BB (ORP)) Tire size: P265/65R17	 2°00'±45' (2.00°±0.75°) 2°26'±45' (2.44°±0.75°) 2°05'±45' (2.08°±0.75°)
	UCK40L−ASBLKA Tire size: P265/70R16 Tire size: P265/70R16 (B2BB (ORP)) Tire size: P265/65R17	 1°54'±45' (1.90°±0.75°) 2°20'±45' (2.33°±0.75°) 1°59'±45' (1.98°±0.75°)
	● Caster (For CANADA)	Right−left error: 30' (0.5°) or less
	GSK30L−TRBDKK Tire size: P245/70R16	 2°00'±45' (2.00°±0.75°)
	UCK40L−TRBDKK Tire size: P245/70R16	 1°23'±45' (1.39°±0.75°)
	UCK30L−ARBSKK Tire size: P245/70R16 Tire size: P265/70R16 Tire size: P265/65R17	 2°04'±45' (2.07°±0.75°) 2°07'±45' (2.12°±0.75°) 2°42'±45' (2.70°±0.75°)
	UCK40L−ARBSKK Tire size: P245/70R16 Tire size: P265/70R16 Tire size: P265/70R16 (B2BB (ORP)) Tire size: P265/65R17	 1°17'±45' (1.28°±0.75°) 1°16'±45' (1.26°±0.75°) 1°42'±45' (1.70°±0.75°) 1°20'±45' (1.34°±0.75°)
	UCK40L−ARBLKK Tire size: P265/70R16 Tire size: P265/70R16 (B2BB (ORP)) Tire size: P265/65R17	 1°08'±45' (1.13°±0.75°) 1°34'±45' (1.57°±0.75°) 1°13'±45' (1.21°±0.75°)
	UCK31L−PRBSKK Tire size: P245/70R16 Tire size: P265/70R16 Tire size: P265/65R17	 2°05'±45' (2.08°±0.75°) 2°07'±45' (2.11°±0.75°) 2°13'±45' (2.21°±0.75°)
	UCK41L−PRBSKK Tire size: P245/70R16 Tire size: P265/70R16 Tire size: P265/70R16 (B2BB (ORP)) Tire size: P265/65R17	 1°53'±45' (1.89°±0.75°) 1°49'±45' (1.82°±0.75°) 1°53'±45' (1.89°±0.75°) 1°56'±45' (1.93°±0.75°)
	UCK41L−PRBLKK Tire size: P265/70R16 Tire size: P265/70R16 (B2BB (ORP)) Tire size: P265/65R17	 1°50'±45' (1.84°±0.75°) 1°55'±45' (1.91°±0.75°) 1°57'±45' (1.95°±0.75°)

Front wheel alignment	● Steering axis inclination (B−cab for U.S.A.)	Right−left error: 30' (0.5°) or less
	GSK30L−TRFDKA Tire size: P245/70R16	10°31'±45' (10.51°±0.75°)
	GSK30L−TRBDKA Tire size: P245/70R16	10°34'±45' (10.56°±0.75°)
	UCK30L−TRBDKA Tire size: P245/70R16	10°32'±45' (10.54°±0.75°)
	UCK40L−TRBDKA Tire size: P245/70R16	10°10'±45' (10.17°±0.75°)
	● Steering axis inclination (D−cab for U.S.A.)	Right−left error: 30' (0.5°) or less
	UCK31L−PRBSKA Tire size: P245/70R16 Tire size: P265/70R16 Tire size: P265/70R16 (B2BB (ORP)) Tire size: P265/65R17	 10°25'±45' (10.41°±0.75°) 10°24'±45' (10.40°±0.75°) 10°22'±45' (10.37°±0.75°) 10°24'±45' (10.40°±0.75°)
	UCK31L−PRBLKA Tire size: P265/70R16 Tire size: P265/70R16 (B2BB (ORP)) Tire size: P265/65R17	 10°23'±45' (10.39°±0.75°) 10°22'±45' (10.37°±0.75°) 10°34'±45' (10.56°±0.75°)
	UCK41L−PRBSKA Tire size: P245/70R16 Tire size: P265/70R16 Tire size: P265/70R16 (B2BB (ORP)) Tire size: P265/65R17	 10°14'±45' (10.24°±0.75°) 10°14'±45' (10.24°±0.75°) 10°13'±45' (10.21°±0.75°) 10°14'±45' (10.24°±0.75°)
	UCK41L−PRBLKA Tire size: P265/70R16 Tire size: P265/70R16 (B2BB (ORP)) Tire size: P265/65R17	 10°14'±45' (10.24°±0.75°) 10°13'±45' (10.21°±0.75°) 10°14'±45' (10.24°±0.75°)
	● Steering axis inclination (C−cab for U.S.A. 2WD models)	Right−left error: 30' (0.5°) or less
	GSK30L−ARFSKA Tire size: P245/70R16 Tire size: P265/70R16	 10°18'±45' (10.30°±0.75°) 10°18'±45' (10.30°±0.75°)
	GSK30L−ARBSKA Tire size: P245/70R16 Tire size: P265/70R16	 10°20'±45' (10.34°±0.75°) 10°20'±45' (10.33°±0.75°)
	UCK30L−ARBSKA Tire size: P245/70R16 Tire size: P265/70R16 Tire size: P265/70R16 (B2BB (ORP)) Tire size: P265/65R17 Tire size: P265/65R17 (B2BC (SPORT))	 10°29'±45' (10.48°±0.75°) 10°28'±45' (10.47°±0.75°) 10°27'±45' (10.45°±0.75°) 10°28'±45' (10.47°±0.75°) 10°40'±45' (10.67°±0.75°)
	UCK30L−ASBLKA Tire size: P265/70R16 Tire size: P265/70R16 (B2BB (ORP)) Tire size: P265/65R17 Tire size: P265/65R17 (B2BC (SPORT))	 10°26'±45' (10.44°±0.75°) 10°25'±45' (10.42°±0.75°) 10°26'±45' (10.44°±0.75°) 10°38'±45' (10.64°±0.75°)
	UCK30L−ASBSKA Tire size: P265/70R16 Tire size: P265/70R16 (B2BB (ORP)) Tire size: P265/65R17 Tire size: P265/65R17 (B2BC (SPORT))	 10°28'±45' (10.47°±0.75°) 10°27'±45' (10.45°±0.75°) 10°28'±45' (10.47°±0.75°) 10°40'±45' (10.67°±0.75°)

Front wheel alignment	UCK30L−ASBLKA Tire size: P265/70R16 Tire size: P265/70R16 (B2BB (ORP)) Tire size: P265/65R17 Tire size: P265/65R17 (B2BC (SPORT))	 10°26'±45' (10.44°±0.75°) 10°25'±45' (10.42°±0.75°) 10°26'±45' (10.44°±0.75°) 10°38'±45' (10.64°±0.75°)
	● Steering axis inclination (C−cab for U.S.A. 4WD models)	Right−left error: 30' (0.5°) or less
	UCK40L−ARBSKA Tire size: P245/70R16 Tire size: P265/70R16 Tire size: P265/70R16 (B2BB (ORP)) Tire size: P265/65R17	 10°07'±45' (10.11°±0.75°) 10°07'±45' (10.11°±0.75°) 10°29'±45' (10.48°±0.75°) 10°07'±45' (10.11°±0.75°)
	UCK40L−ARBLKA Tire size: P265/70R16 Tire size: P265/70R16 (B2BB (ORP)) Tire size: P265/65R17	 10°06'±45' (10.10°±0.75°) 10°27'±45' (10.45°±0.75°) 10°06'±45' (10.10°±0.75°)
	UCK40L−ASBSKA Tire size: P265/70R16 Tire size: P265/70R16 (B2BB (ORP)) Tire size: P265/65R17	 10°07'±45' (10.11°±0.75°) 10°28'±45' (10.47°±0.75°) 10°07'±45' (10.11°±0.75°)
	UCK40L−ASBLKA Tire size: P265/70R16 Tire size: P265/70R16 (B2BB (ORP)) Tire size: P265/65R17	 10°06'±45' (10.10°±0.75°) 10°27'±45' (10.45°±0.75°) 10°06'±45' (10.10°±0.75°)
	● Steering axis inclination (For CANADA)	Right−left error: 30' (0.5°) or less
	GSK30L−TRBDKK Tire size: P245/70R16	 10°31'±45' (10.51°±0.75°)
	UCK40L−TRBDKK Tire size: P245/70R16	 10°09'±45' (10.15°±0.75°)
	UCK30L−ARBSKK Tire size: P245/70R16 Tire size: P265/70R16 Tire size: P265/65R17	 10°31'±45' (10.51°±0.75°) 10°30'±45' (10.50°±0.75°) 10°30'±45' (10.50°±0.75°)
	UCK40L−ARBSKK Tire size: P245/70R16 Tire size: P265/70R16 Tire size: P265/70R16 (B2BB (ORP)) Tire size: P265/65R17	 10°07'±45' (10.12°±0.75°) 10°07'±45' (10.12°±0.75°) 10°29'±45' (10.49°±0.75°) 10°07'±45' (10.12°±0.75°)
	UCK40L−ARBLKK Tire size: P265/70R16 Tire size: P265/70R16 (B2BB (ORP)) Tire size: P265/65R17	 10°06'±45' (10.10°±0.75°) 10°28'±45' (10.46°±0.75°) 10°06'±45' (10.10°±0.75°)
	UCK31L−PRBSKK Tire size: P245/70R16 Tire size: P265/70R16 Tire size: P265/65R17	 10°26'±45' (10.43°±0.75°) 10°26'±45' (10.43°±0.75°) 10°26'±45' (10.43°±0.75°)
	UCK41L−PRBSKK Tire size: P245/70R16 Tire size: P265/70R16 Tire size: P265/70R16 (B2BB (ORP)) Tire size: P265/65R17	 10°14'±45' (10.24°±0.75°) 10°14'±45' (10.24°±0.75°) 10°13'±45' (10.21°±0.75°) 10°14'±45' (10.24°±0.75°)
	UCK41L−PRBLKK Tire size: P265/70R16 Tire size: P265/70R16 (B2BB (ORP)) Tire size: P265/65R17	 10°15'±45' (10.25°±0.75°) 10°13'±45' (10.22°±0.75°) 10°15'±45' (10.25°±0.75°)

Front wheel alignment	● Toe−in (total) (B−cab for U.S.A.)	Rack end length difference: 1.5 mm (0.059 in.) or less
	GSK30L−TRFDKA Tire size: P245/70R16	0°05'±45' (0.08°±0.2°, 1.38±2 mm, 0.05±0.08 in.)
	GSK30L−TRBDKA Tire size: P245/70R16	0°04'±45' (0.07°±0.2°, 1.20±2 mm, 0.05±0.08 in.)
	UCK30L−TRBDKA Tire size: P245/70R16	0°05'±45' (0.08°±0.2°, 1.28±2 mm, 0.05±0.08 in.)
	UCK40L−TRBDKA Tire size: P245/70R16	0°04'±45' (0.06°±0.2°, 0.97±2 mm, 0.04±0.08 in.)
	● Toe−in (total) (D−cab for U.S.A.)	Rack end length difference: 1.5 mm (0.059 in.) or less
	UCK31L−PRBSKA Tire size: P245/70R16 Tire size: P265/70R16 Tire size: P265/70R16 (B2BB (ORP)) Tire size: P265/65R17	 0°07'±45' (0.10°±0.2°, 1.82±2 mm, 0.07±0.08 in.) 0°07'±45' (0.11°±0.2°, 1.87±2 mm, 0.07±0.08 in.) 0°07'±45' (0.12°±0.2°, 2.01±2 mm, 0.08±0.08 in.) 0°07'±45' (0.11°±0.2°, 1.87±2 mm, 0.07±0.08 in.)
	UCK31L−PRBLKA Tire size: P265/70R16 Tire size: P265/70R16 (B2BB (ORP)) Tire size: P265/65R17	 0°07'±45' (0.11°±0.2°, 1.89±2 mm, 0.07±0.08 in.) 0°07'±45' (0.12°±0.2°, 2.02±2 mm, 0.08±0.08 in.) 0°07'±45' (0.11°±0.2°, 1.89±2 mm, 0.07±0.08 in.)
	UCK41L−PRBSKA Tire size: P245/70R16 Tire size: P265/70R16 Tire size: P265/70R16 (B2BB (ORP)) Tire size: P265/65R17	 0°06'±45' (0.10°±0.2°, 1.72±2 mm, 0.07±0.08 in.) 0°06'±45' (0.11°±0.2°, 1.78±2 mm, 0.07±0.08 in.) 0°07'±45' (0.11°±0.2°, 1.90±2 mm, 0.07±0.08 in.) 0°06'±45' (0.11°±0.2°, 1.78±2 mm, 0.07±0.08 in.)
	UCK41L−PRBLKA Tire size: P265/70R16 Tire size: P265/70R16 (B2BB (ORP)) Tire size: P265/65R17	 0°06'±45' (0.11°±0.2°, 1.78±2 mm, 0.07±0.08 in.) 0°07'±45' (0.11°±0.2°, 1.90±2 mm, 0.07±0.08 in.) 0°06'±45' (0.11°±0.2°, 1.78±2 mm, 0.07±0.08 in.)
	● Toe−in (total) (C−cab for U.S.A. 2WD models)	Rack end length difference: 1.5 mm (0.059 in.) or less
	GSK30L−ARFSKA Tire size: P245/70R16 Tire size: P265/70R16	 0°08'±45' (0.14°±0.2°, 2.29±2 mm, 0.09±0.08 in.) 0°08'±45' (0.14°±0.2°, 2.36±2 mm, 0.09±0.08 in.)
	GSK30L−ARBSKA Tire size: P245/70R16 Tire size: P265/70R16	 0°08'±45' (0.13°±0.2°, 2.13±2 mm, 0.08±0.08 in.) 0°08'±45' (0.13°±0.2°, 2.19±2 mm, 0.09±0.08 in.)
	UCK30L−ARBSKA Tire size: P245/70R16 Tire size: P265/70R16 Tire size: P265/70R16 (B2BB (ORP)) Tire size: P265/65R17 Tire size: P265/65R17 (B2BC (SPORT))	 0°05'±45' (0.09°±0.2°, 1.50±2 mm, 0.06±0.08 in.) 0°06'±45' (0.09°±0.2°, 1.55±2 mm, 0.06±0.08 in.) 0°06'±45' (0.10°±0.2°, 1.66±2 mm, 0.07±0.08 in.) 0°06'±45' (0.09°±0.2°, 1.55±2 mm, 0.06±0.08 in.) 0°03'±45' (0.04°±0.2°, 0.72±2 mm, 0.03±0.08 in.)
	UCK30L−ASBLKA Tire size: P265/70R16 Tire size: P265/70R16 (B2BB (ORP)) Tire size: P265/65R17 Tire size: P265/65R17 (B2BC (SPORT))	 0°06'±45' (0.10°±0.2°, 1.67±2 mm, 0.07±0.08 in.) 0°06'±45' (0.10°±0.2°, 1.79±2 mm, 0.07±0.08 in.) 0°06'±45' (0.10°±0.2°, 1.67±2 mm, 0.07±0.08 in.) 0°03'±45' (0.05°±0.2°, 0.86±2 mm, 0.03±0.08 in.)
	UCK30L−ASBSKA Tire size: P265/70R16 Tire size: P265/70R16 (B2BB (ORP)) Tire size: P265/65R17 Tire size: P265/65R17 (B2BC (SPORT))	 0°06'±45' (0.09°±0.2°, 1.55±2 mm, 0.06±0.08 in.) 0°06'±45' (0.10°±0.2°, 1.66±2 mm, 0.07±0.08 in.) 0°06'±45' (0.09°±0.2°, 1.55±2 mm, 0.06±0.08 in.) 0°03'±45' (0.04°±0.2°, 0.72±2 mm, 0.03±0.08 in.)

Front wheel alignment	UCK30L−ASBLKA	
	Tire size: P265/70R16	0°06'±45' (0.10°±0.2°, 1.67±2 mm, 0.07±0.08 in.)
	Tire size: P265/70R16 (B2BB (ORP))	0°06'±45' (0.10°±0.2°, 1.79±2 mm, 0.07±0.08 in.)
	Tire size: P265/65R17	0°06'±45' (0.10°±0.2°, 1.67±2 mm, 0.07±0.08 in.)
	Tire size: P265/65R17 (B2BC (SPORT))	0°03'±45' (0.05°±0.2°, 0.86±2 mm, 0.03±0.08 in.)
	● Toe−in (total) (C−cab for U.S.A. 4WD models)	Rack end length difference: 1.5 mm (0.059 in.) or less
	UCK40L−ARBSKA	
	Tire size: P245/70R16	0°05'±45' (0.08°±0.2°, 1.31±2 mm, 0.05±0.08 in.)
	Tire size: P265/70R16	0°05'±45' (0.08°±0.2°, 1.35±2 mm, 0.05±0.08 in.)
	Tire size: P265/70R16 (B2BB (ORP))	−0°02'±45' (−0.03°±0.2°, −0.48±2 mm, −0.02±0.08 in.)
	Tire size: P265/65R17	0°05'±45' (0.08°±0.2°, 1.35±2 mm, 0.05±0.08 in.)
	UCK40L−ARBLKA	
	Tire size: P265/70R16	0°05'±45' (0.09°±0.2°, 1.45±2 mm, 0.06±0.08 in.)
	Tire size: P265/70R16 (B2BB (ORP))	−0°01'±45' (−0.02°±0.2°, −0.38±2 mm, −0.01±0.08 in.)
	Tire size: P265/65R17	0°05'±45' (0.09°±0.2°, 1.45±2 mm, 0.06±0.08 in.)
	UCK40L−ASBSKA	
	Tire size: P265/70R16	0°05'±45' (0.08°±0.2°, 1.40±2 mm, 0.06±0.08 in.)
	Tire size: P265/70R16 (B2BB (ORP))	−0°02'±45' (−0.03°±0.2°, −0.43±2 mm, −0.02±0.08 in.)
	Tire size: P265/65R17	0°05'±45' (0.08°±0.2°, 1.40±2 mm, 0.06±0.08 in.)
	UCK40L−ASBLKA	
	Tire size: P265/70R16	0°05'±45' (0.09°±0.2°, 1.45±2 mm, 0.06±0.08 in.)
	Tire size: P265/70R16 (B2BB (ORP))	−0°01'±45' (−0.02°±0.2°, −0.38±2 mm, −0.01±0.08 in.)
	Tire size: P265/65R17	0°05'±45' (0.09°±0.2°, 1.45±2 mm, 0.06±0.08 in.)
	● Toe−in (total) (For CANADA)	Rack end length difference: 1.5 mm (0.059 in.) or less
	GSK30L−TRBDKK	
	Tire size: P245/70R16	0°05'±45' (0.08°±0.2°, 1.38±2 mm, 0.05±0.08 in.)
	UCK40L−TRBDKK	
	Tire size: P245/70R16	0°03'±45' (0.04°±0.2°, 1.11±2 mm, 0.04±0.08 in.)
	UCK30L−ARBSKK	
	Tire size: P245/70R16	0°05'±45' (0.08°±0.2°, 1.38±2 mm, 0.05±0.08 in.)
	Tire size: P265/70R16	0°05'±45' (0.09°±0.2°, 1.42±2 mm, 0.06±0.08 in.)
	Tire size: P265/65R17	0°05'±45' (0.09°±0.2°, 1.42±2 mm, 0.06±0.08 in.)
	UCK40L−ARBSKK	
	Tire size: P245/70R16	0°05'±45' (0.08°±0.2°, 1.28±2 mm, 0.05±0.08 in.)
	Tire size: P265/70R16	0°05'±45' (0.08°±0.2°, 1.32±2 mm, 0.05±0.08 in.)
	Tire size: P265/70R16 (B2BB (ORP))	0°02'±45' (0.03°±0.2°, −0.52±2 mm, 0.02±0.08 in.)
	Tire size: P265/65R17	0°05'±45' (0.08°±0.2°, 1.32±2 mm, 0.05±0.08 in.)
	UCK40L−ARBLKK	
	Tire size: P265/70R16	0°05'±45' (0.09°±0.2°, 1.42±2 mm, 0.06±0.08 in.)
	Tire size: P265/70R16 (B2BB (ORP))	−0°05'±45' (−0.08°±0.2°, −1.41±2 mm, −0.06±0.08 in.)
	Tire size: P265/65R17	0°05'±45' (0.09°±0.2°, 1.42±2 mm, 0.06±0.08 in.)
	UCK31L−PRBSKK	
	Tire size: P245/70R16	0°06'±45' (0.10°±0.2°, 1.70±2 mm, 0.07±0.08 in.)
	Tire size: P265/70R16	0°06'±45' (0.11°±0.2°, 1.75±2 mm, 0.07±0.08 in.)
	Tire size: P265/65R17	0°06'±45' (0.11°±0.2°, 1.75±2 mm, 0.07±0.08 in.)
	UCK41L−PRBSKK	
	Tire size: P245/70R16	0°06'±45' (0.10°±0.2°, 1.72±2 mm, 0.07±0.08 in.)
	Tire size: P265/70R16	0°06'±45' (0.11°±0.2°, 1.78±2 mm, 0.07±0.08 in.)
	Tire size: P265/70R16 (B2BB (ORP))	0°07'±45' (0.11°±0.2°, 1.90±2 mm, 0.07±0.08 in.)
	Tire size: P265/65R17	0°06'±45' (0.11°±0.2°, 1.78±2 mm, 0.07±0.08 in.)
	UCK41L−PRBLKK	
	Tire size: P265/70R16	0°06'±45' (0.10°±0.2°, 1.74±2 mm, 0.07±0.08 in.)
	Tire size: P265/70R16 (B2BB (ORP))	0°07'±45' (0.11°±0.2°, 1.86±2 mm, 0.07±0.08 in.)
	Tire size: P265/65R17	0°06'±45' (0.10°±0.2°, 1.74±2 mm, 0.07±0.08 in.)

Front wheel alignment	● Wheel angle (B−cab for U.S.A.)	
	GSK30L−TRFDKA Tire size: P245/70R16 Inside wheel Outside wheel: Reference	 −35˚24' (−35.40˚) 32˚13' (32.21˚)
	GSK30L−TRBDKA Tire size: P245/70R16	 −35˚21' (−35.35˚) 32˚10' (32.16˚)
	UCK30L−TRBDKA Tire size: P245/70R16	 −35˚22' (−35.37˚) 32˚11' (32.18˚)
	UCK40L−TRBDKA Tire size: P245/70R16	 −35˚59' (−35.98˚) 32˚31' (32.51˚)
	● Wheel angle (D−cab for U.S.A.)	
	UCK31L−PRBSKA Tire size: P245/70R16 Tire size: P265/70R16 Tire size: P265/70R16 (B2BB (ORP)) Tire size: P265/65R17	 −35˚32' (−35.53˚) 32˚19' (32.32˚) −35˚32' (−35.53˚) 32˚19' (32.32˚) −35˚34' (−35.56˚) 32˚21' (32.35˚) −35˚32' (−35.53˚) 32˚19' (32.32˚)
	UCK31L−PRBLKA Tire size: P265/70R16 Tire size: P265/70R16 (B2BB (ORP)) Tire size: P265/65R17	 −35˚32' (−35.53˚) 32˚19' (32.32˚) −35˚34' (−35.57˚) 32˚22' (32.36˚) −35˚32' (−35.53˚) 32˚19' (32.32˚)
	UCK41L−PRBSKA Tire size: P245/70R16 Tire size: P265/70R16 Tire size: P265/70R16 (B2BB (ORP)) Tire size: P265/65R17	 −35˚49' (−35.81˚) 32˚28' (32.47˚) −35˚49' (−35.81˚) 32˚28' (32.47˚) −35˚51' (−35.85˚) 32˚30' (32.50˚) −35˚49' (−35.81˚) 32˚28' (32.47˚)
	UCK41L−PRBLKA Tire size: P265/70R16 Tire size: P265/70R16 (B2BB (ORP)) Tire size: P265/65R17	 −35˚49' (−35.81˚) 32˚28' (32.47˚) −35˚51' (−35.85˚) 32˚30' (32.50˚) −35˚49' (−35.81˚) 32˚28' (32.47˚)
	● Wheel angle (C−cab for U.S.A. 2WD models)	
	GSK30L−ARFSKA Tire size: P245/70R16 Tire size: P265/70R16	 −35˚40' (−35.67˚) 32˚26' (32.44˚) −35˚40' (−35.66˚) 32˚26' (32.44˚)

Front wheel alignment	GSK30L−ARBSKA	
	Tire size: P245/70R16	−35˚37' (−35.62˚) 32˚24' (32.40˚)
	Tire size: P265/70R16	−35˚37' (−35.61˚) 32˚24' (32.40˚)
	UCK30L−ARBSKA	
	Tire size: P245/70R16	−35˚26' (−35.44˚) 32˚14' (32.24˚)
	Tire size: P265/70R16	−35˚26' (−35.44˚) 32˚14' (32.24˚)
	Tire size: P265/70R16 (B2BB (ORP))	−35˚28' (−35.47˚) 32˚16' (32.26˚)
	Tire size: P265/65R17	−35˚26' (−35.44˚) 32˚14' (32.24˚)
	Tire size: P265/65R17 (B2BC (SPORT))	−35˚13' (−35.22˚) 32˚02' (32.03˚)
	UCK30L−ASBLKA	
	Tire size: P265/70R16	−35˚28' (−35.47˚) 32˚16' (32.27˚)
	Tire size: P265/70R16 (B2BB (ORP))	−35˚30' (−35.50˚) 32˚18' (32.30˚)
	Tire size: P265/65R17	−35˚28' (−35.47˚) 32˚16' (32.27˚)
	Tire size: P265/65R17 (B2BC (SPORT))	−35˚16' (−35.26˚) 32˚04' (32.07˚)
	UCK30L−ASBSKA	
	Tire size: P265/70R16	−35˚26' (−35.44˚) 32˚14' (32.24˚)
	Tire size: P265/70R16 (B2BB (ORP))	−35˚28' (−35.47˚) 32˚16' (32.26˚)
	Tire size: P265/65R17	−35˚26' (−35.44˚) 32˚14' (32.24˚)
	Tire size: P265/65R17 (B2BC (SPORT))	−35˚13' (−35.22˚) 32˚02' (32.02˚)
	UCK30L−ASBLKA	
	Tire size: P265/70R16	−35˚28' (−35.47˚) 32˚16' (32.27˚)
	Tire size: P265/70R16 (B2BB (ORP))	−35˚30' (−35.50˚) 32˚18' (32.30˚)
	Tire size: P265/65R17	−35˚28' (−35.47˚) 32˚16' (32.27˚)
	Tire size: P265/65R17 (B2BC (SPORT))	−35˚16' (−35.26˚) 32˚04' (32.07˚)
	● Wheel angle (C−cab for U.S.A. 4WD models)	
	UCK40L−ARBSKA	
	Tire size: P245/70R16	−36˚05' (−36.08˚) 32˚35' (32.59˚)
	Tire size: P265/70R16	−36˚05' (−36.08˚) 32˚35' (32.59˚)
	Tire size: P265/70R16 (B2BB (ORP))	−35˚32' (−35.54˚) 32˚09' (32.15˚)
	Tire size: P265/65R17	−36˚05' (−36.08˚) 32˚35' (32.59˚)

Front wheel alignment	UCK40L−ARBLKA Tire size: P265/70R16 Tire size: P265/70R16 (B2BB (ORP)) Tire size: P265/65R17	 −36°07' (−36.11°) 32°37' (32.61°) −35°34' (−35.57°) 32°11' (32.18°) −36°07' (−36.11°) 32°37' (32.61°)
	UCK40L−ASBSKA Tire size: P265/70R16 Tire size: P265/70R16 (B2BB (ORP)) Tire size: P265/65R17	 −36°06' (−36.10°) 32°36' (32.60°) −35°34' (−35.56°) 32°10' (32.16°) −35°06' (−36.10°) 32°36' (32.60°)
	UCK40L−ASBLKA Tire size: P265/70R16 Tire size: P265/70R16 (B2BB (ORP)) Tire size: P265/65R17	 −36°07' (−36.11°) 32°37' (32.61°) −35°34' (−35.57°) 32°11' (32.18°) −35°24' (−35.40°) 32°13' (32.21°)
	● Wheel angle (For CANADA)	
	GSK30L−TRBDKK Tire size: P245/70R16	 −35°24' (−35.40°) 32°13' (32.21°)
	UCK40L−TRBDKK Tire size: P245/70R16	 −36°01' (−36.02°) 32°32' (32.54°)
	UCK30L−ARBSKK Tire size: P245/70R16 Tire size: P265/70R16 Tire size: P265/65R17	 −35°24' (−35.40°) 32°13' (32.21°) −36°24' (−35.40°) 32°13' (32.21°) −35°24' (−35.40°) 32°13' (32.21°)
	USK40L−ARBSKK Tire size: P245/70R16 Tire size: P265/70R16 Tire size: P265/70R16 (B2BB (ORP)) Tire size: P265/65R17	 −36°04' (−36.07°) 32°35' (32.58°) −36°04' (−36.07°) 32°35' (32.58°) −35°32' (−35.53°) 32°08' (32.14°) −36°04' (−36.07°) 32°35' (32.58°)
	UCK40L−ARBLKK Tire size: P265/70R16 Tire size: P265/70R16 (B2BB (ORP)) Tire size: P265/65R17	 −36°06' (−36.10°) 32°36' (32.60°) −35°34' (−35.56°) 32°10' (32.17°) −36°06' (−36.10°) 32°36' (32.60°)

Front wheel alignment	UCK31L−PRBSKK Tire size: P245/70R16 Tire size: P265/70R16 Tire size: P265/65R17	 −35°29′ (−35.49°) 32°17′ (32.29°) −35°29′ (−35.49°) 32°17′ (32.29°) −35°29′ (−35.49°) 32°17′ (32.29°)
	UCK41L−PRBSKK Tire size: P245/70R16 Tire size: P265/70R16 Tire size: P265/70R16 (B2BB (ORP)) Tire size: P265/65R17	 −35°49′ (−35.81°) 32°28′ (32.47°) −35°49′ (−35.81°) 32°28′ (32.47°) −35°51′ (−35.85°) 32°30′ (32.50°) −35°49′ (−35.81°) 32°28′ (32.47°)
	UCK41L−PRBLKK Tire size: P265/70R16 Tire size: P265/70R16 (B2BB (ORP)) Tire size: P265/65R17	 −35°48′ (−35.80°) 32°28′ (32.46°) −35°50′ (−35.84°) 32°29′ (32.49°) −35°48′ (−35.80°) 32°28′ (32.46°)
Front drive shaft	Front drive shaft length	523.5 ± 2.0 mm (20.610 ± 0.079 in.)
Front suspension	Upper ball joint turning torque	0.7 − 4.4 N·m (7 − 45 kgf·cm, 6 − 39 in.·lbf)
Front suspension	Lower ball joint excessive play Maximum	0.5 mm (0.020 in.)
	Lower ball joint turning torque	0.1 − 6.5 N·m (1 − 66 kgf·cm, 1 − 58 in.·lbf)
	Stabilizer bar link ball joint turning toque	0.05 − 2.0 N·m (0.5 − 20 kgf·cm, 0.4 − 17 in.·lbf)

Front differential	Companion flange vertical runout	Maximum	0.10 mm (0.0039 in.)
	Companion flange lateral runout	Maximum	0.10 mm (0.0039 in.)
	Drive pinion preload (at starting)	New bearing	1.2 − 1.9 N·m (12 − 19 kgf·cm, 10.4 − 16.5 in.·lbf)
		Reused bearing	0.6 − 1.0 N·m (6 − 10 kgf·cm, 5.2 − 8.7 in.·lbf)
	Total preload (at starting)		Drive pinion preload plus 0.4 − 0.6 N·m (4 − 6 kgf·cm, 3.5 − 5.2 in.·lbf)
	Drive pinion to ring gear backlash		0.13 − 0.18 mm (0.0051 − 0.0071 in.)
	Side gear backlash		0 − 0.20 mm (0 − 0.0079 in.)
	Rear oil seal drive in depth		4.5 ± 0.3 mm (0.177 ± 0.012 in.)
	Side oil seal drive in depth		0 mm (0 in.)
	Side tube oil seal drive in depth		5.5 ± 0.3 mm (0.217 ± 0.012 in.)
	Side gear thrust washer thickness		0.96 − 1.04 mm (0.0378 − 0.0409 in.)
			1.06 − 1.14 mm (0.0417 − 0.0449 in.)
			1.16 − 1.24 mm (0.0457 − 0.0488 in.)
			1.26 − 1.34 mm (0.0496 −0.0528 in.)
	Side gear bearing adjusting washer thickness		2.00 − 2.02 mm (0.0787 − 0.0795 in.)
			2.03 − 2.05 mm (0.0799 − 00807 in.)
			2.06 − 2.08 mm (0.0811 − 0.0819 in.)
			2.09 − 2.11 mm (0.0823 − 0.0831 in.)
			2.12 − 2.14 mm (0.0835 − 0.0843 in.)
			2.15 − 2.17 mm (0.0846 − 0.0854 in.)
			2.18 − 2.20 mm (0.0858 − 0.0866 in.)
			2.21 − 2.23 mm (0.0870 − 0.0878 in.)
			2.24 − 2.26 mm (0.0882 − 0.0890 in.)
			2.27 − 2.29 mm (0.0894 − 0.0902 in.)
			2.30 − 2.32 mm (0.0906 − 0.0913 in.)
			2.33 − 2.35 mm (0.0917 − 0.0925 in.)
			2.36 − 2.38 mm (0.0929 − 0.0937 in.)
			2.39 − 2.41 mm (0.0941 − 0.0949 in.)
			2.42 − 2.44 mm (0.0953 − 0.0961 in.)
			2.45 − 2.47 mm (0.0965 − 0.0972 in.)
			2.48 − 2.50 mm (0.0976 − 0.0984 in.)
			2.51 − 2.53 mm (0.0988 − 0.0996 in.)
			2.54 − 2.56 mm (0.1000 − 01008 in.)
			2.57 − 2.59 mm (0.1012 − 0.1020 in.)
			2.60 − 2.62 mm (0.1024 − 0.1031 in.)
			2.63 − 2.65 mm (0.1035 − 0.1043 in.)
			2.66 − 2.68 mm (0.1047 − 0.1055 in.)
			2.69 − 2.71 mm (0.1059 − 0.1067 in.)
			2.72 − 2.74 mm (0.1071 − 0.1079 in.)
			2.75 − 2.77 mm (0.1083 − 0.1091 in.)
			2.78 − 2.80 mm (0.1094 − 0.1102 in.)

Front differential	Drive pinion bearing adjusting washer thickness	1.69 − 1.71 mm (0.0665 − 0.0673 in.)
		1.72 − 1.74 mm (0.0677 − 0.0685 in.)
		1.75 − 1.77 mm (0.0689 − 0.0697 in.)
		1.78 − 1.80 mm (0.0701 − 0.0709 in.)
		1.81 − 1.83 mm (0.0713 − 0.0720 in.)
		1.84 − 1.86 mm (0.0724 − 0.0732 in.)
		1.87 − 1.89 mm (0.0736 − 0.0744 in.)
		1.90 − 1.92 mm (0.0748 − 0.0756 in.)
		1.93 − 1.95 mm (0.0760 − 0.0768 in.)
		1.96 − 1.98 mm (0.0772 − 0.0780 in.)
		1.99 − 2.01 mm (0.0783 − 0.0791 in.)
		2.02 − 2.04 mm (0.0795 − 0.0803 in.)
		2.05 − 2.07 mm (0.0807 − 0.0815 in.)
		2.08 − 2.10 mm (0.0819 − 0.0827 in.)
		2.11 − 2.13 mm (0.0831 − 0.0839 in.)
		2.14 − 2.16 mm (0.0843 − 0.0850 in.)
		2.17 − 2.19 mm (0.0854 − 0.0862 in.)
		2.20 − 2.22 mm (0.0866 − 0.0874 in.)
		2.23 − 2.25 mm (0.0878 − 0.0886 in.)
		2.26 − 2.28 mm (0.0890 − 0.0898 in.)
		2.29 − 2.31 mm (0.0902 − 0.0909 in.)
		2.32 − 2.34 mm (0.0913 − 0.0921 in.)
	A.D.D. sleeve fork to clutch sleeve clearance	0.35 mm (0.0138 in.) or less
	Differential case needle bearing press in depth	0.3 ± 0.3 mm (0.012 ± 0.012 in.)
Rear axle shaft	Axle shaft bearing backlash Maximum	0.7 mm (0.028 in.)
	Axle shaft deviation Maximum	0.1 mm (0.004 in.)
	Shaft runout Maximum	2.0 mm (0.079 in.)
	Flange runout Maximum	0.1 mm (0.004 in.)
Rear differential	Companion flange runout Maximum	0.09 mm (0.0035 in.)
	Ring gear runout Maximum	0.05 mm (0.0020 in.)
	Drive pinion to ring gear backlash	0.13 − 0.18 mm (0.0051 − 0.0071 in.)
	Drive pinion preload (at starting) New bearing Reused bearing	1.3 − 1.9 N·m (13 − 19 kgf·cm, 11.4 − 16.7 in.·lbf) 0.6 − 0.9 N·m (6.1 − 9.2 kgf·cm, 5.3 − 8.0 in.·lbf)
	Total preload (at starting)	Drive pinion preload plus 0.4 − 0.6 N·m (4 − 6 kgf·cm, 3.5 − 5.2 in.·lbf)
	Differential case runout Maximum	0.04 mm (0.0016 in.)
	Side gear thrust washers for wear or damage	1.77 − 2.49 mm (0.0697 − 0.0980 in.)
	Clutch plate for wear or damage	1.57 − 1.63 mm (0.0618 − 0.0642 in.)
	Compression spring free length	26.4 mm (1.039 in.)
	Adjusting shim mark and thickness A B C D E	0.15 mm (0.0059 in.) 0.20 mm (0.0079 in.) 0.25 mm (0.0098 in.) 0.30 mm (0.0118 in.) 0.35 mm (0.0138 in.)
Rear differential	Side gear backlash	0.05 − 0.20 mm (0.0020 − 0.0079 in.)

Rear differential	Differential case to rotation torque	Standard	27.5 − 43.0 N·m (281 − 439 kgf·cm, 20 − 32 ft·lbf)
	Ring gear runout	Maximum	0.05 mm (0.0020 in.)
	Drive pinion oil seal drive in depth		0 mm (0 in.)
	Side gear thrust washer thickness		1.80 mm (0.0709 in.)
			1.86 mm (0.0732 in.)
			1.92 mm (0.0756 in.)
			1.98 mm (0.0780 in.)
			2.04 mm (0.0803 in.)
			2.10 mm (0.0827 in.)
			2.22 mm (0.0850 in.)
			2.28 mm (0.0874 in.)
			2.34 mm (0.0898 in.)
			2.34 mm (0.0921 in.)
			2.40 mm (0.0945 in.)
			2.46 mm (0.0969 in.)

Rear differential	Side bearing adjusting washer thickness	58	2.58 mm (0.1015 in.)
		60	2.60 mm (0.1024 in.)
		62	2.62 mm (0.1031 in.)
		64	2.64 mm (0.1039 in.)
		66	2.66 mm (0.1047 in.)
		68	2.68 mm (0.1055 in.)
		70	2.70 mm (0.1063 in.)
		72	2.72 mm (0.1071 in.)
		74	2.74 mm (0.1079 in.)
		76	2.76 mm (0.1087 in.)
		78	2.78 mm (0.1094 in.)
		80	2.80 mm (0.1102 in.)
		82	2.82 mm (0.1110 in.)
		84	2.84 mm (0.1118 in.)
		86	2.86 mm (0.1126 in.)
		88	2.88 mm (0.1134 in.)
		90	2.90 mm (0.1142 in.)
		92	2.92 mm (0.1150 in.)
		94	2.94 mm (0.1157 in.)
		96	2.96 mm (0.1165 in.)
		98	2.98 mm (0.1173 in.)
		00	3.00 mm (0.1181 in.)
		02	3.02 mm (0.1189 in.)
		04	3.04 mm (0.1197 in.)
		06	3.06 mm (0.1205 in.)
		08	3.08 mm (0.1213 in.)
		10	3.10 mm (0.1220 in.)
		12	3.12 mm (0.1228 in.)
		14	3.14 mm (0.1236 in.)
		16	3.16 mm (0.1244 in.)
		18	3.18 mm (0.1252 in.)
		20	3.20 mm (0.1260 in.)
		22	3.22 mm (0.1268 in.)
		24	3.24 mm (0.1276 in.)
		26	3.26 mm (0.1283 in.)
		28	3.28 mm (0.1291 in.)
		30	3.30 mm (0.1299 in.)
		32	3.32 mm (0.1307 in.)
		34	3.34 mm (0.1315 in.)
		36	3.36 mm (0.1323 in.)
		38	3.38 mm (0.1331 in.)
		40	3.40 mm (0.1339 in.)
		42	3.42 mm (0.1346 in.)
		44	3.44 mm (0.1354 in.)
		46	3.46 mm (0.1362 in.)
		48	3.48 mm (0.1370 in.)

Rear differential	Drive pinion bearing adjusting washer thickness	87	1.87 mm (0.0736 in.)
		88	1.88 mm (0.0740 in.)
		89	1.89 mm (0.0744 in.)
		90	1.90 mm (0.0748 in.)
		91	1.91 mm (0.0752 in.)
		92	1.92 mm (0.0756 in.)
		93	1.93 mm (0.0760 in.)
		94	1.94 mm (0.0764 in.)
		95	1.95 mm (0.0768 in.)
		96	1.96 mm (0.0772 in.)
		97	1.97 mm (0.0776 in.)
		98	1.98 mm (0.0780 in.)
		99	1.99 mm (0.0783 in.)
		00	2.00 mm (0.0787 in.)
		01	2.01 mm (0.0791 in.)
		02	2.02 mm (0.0795 in.)
		03	2.03 mm (0.0799 in.)
		04	2.04 mm (0.0803 in.)
		05	2.05 mm (0.0807 in.)
		06	2.06 mm (0.0811 in.)
		07	2.07 mm (0.0815 in.)
		08	2.08 mm (0.0819 in.)
		09	2.09 mm (0.0823 in.)
		10	2.10 mm (0.0827 in.)
		11	2.11 mm (0.0831 in.)
		12	2.12 mm (0.0835 in.)
		13	2.13 mm (0.0839 in.)
		14	2.14 mm (0.0843 in.)
		15	2.15 mm (0.0846 in.)
		16	2.16 mm (0.0850 in.)
		17	2.17 mm (0.0854 in.)
		18	2.18 mm(0.0858 in.)
		19	2.19 mm (0.0862 in.)
		20	2.20 mm (0.0866 in.)
		21	2.21 mm (0.0870 in.)
		22	2.22 mm (0.0874 in.)
		23	2.23 mm (0.0878 in.)
		24	2.24 mm (0.0882 in.)
		25	2.25 mm (0.0886 in.)
		26	2.26 mm (0.0890 in.)
		27	2.27 mm (0.0894 in.)
		28	2.28 mm (0.0898 in.)

SS052−13

TORQUE SPECIFICATION

Part tightened	N·m	kgf·cm	ft·lbf
TIRE PRESSURE MONITOR RECEIVER			
Tire pressure monitor receiver set bolt	7.5	76	66 in.·lbf
TIRE PRESSURE MONITOR VALVE			
Tire pressure monitor valve set nut	4.0	41	35 in.·lbf
FRONT AXLE			
Hub nut	110	1,150	83
Tie rod end lock nut	55	560	41
Steering knuckle x Lower ball joint	65	662	48
Steering knuckle x Brake caliper	123	1,250	90
Steering knuckle x Dust cover	18	185	13
Drive shaft lock nut	235	2,400	173
Upper suspension arm x Upper ball joint	105	1,100	77
Brake line clamp x Steering knuckle	28	285	21
ABS speed sensor x Steering knuckle	8.0	82	71 ft·lbf
ABS speed sensor wire harness clamp x Steering knuckle	8.0	82	71 ft·lbf
ABS speed sensor wire harness clamp x Upper suspension arm	8.0	82	71 ft·lbf
Axle hub bearing lock nut (2WD)	274	2,800	203
FRONT DIFFERENTIAL			
Drive pinion x Companion flange	See page SA−48		
Differential front mounting cushion x Chassis frame	137	1,400	101
Differential rear mounting cushion x Chassis frame	87	890	64
Differential front mounting cushion x Differential	157	1,600	116
Differential rear mounting cushion x Differential	108	1,100	80
Ring gear x Differential case	97	985	71
Differential carrier x Differential tube	78	800	58
Differential carrier x Side bearing retainer	69	700	51
Differential x Front propeller shaft	74	750	54
A.D.D. clutch case x Differential	78	800	58
A.D.D. clutch case x Differential tube	78	800	58
A.D.D. actuator x A.D.D. clutch case	21	210	15
Tube with wire harness assembly clamp x Differential carrier	13	130	9
Drain plug	65	660	48
Filler plug	39	400	29
FRONT SUSPENSION			
Suspension support x Chassis frame	64	650	47
Piston rod x Suspension support	25	250	18
Lower suspension arm x Shock absorber	135	1,400	100
Upper suspension arm x Chassis frame	98	1,000	72
Lower suspension arm x Chassis frame	130	1,325	96
Lower suspension arm x Lower ball joint	159	1,620	117
Power steering gear — Left side nut	130	1,350	96
Power steering gear — Center bolt	165	1,700	122
Power steering gear — Right side bolt and nut	165	1,700	122
Tie rod end x Lower ball joint	91	930	67

No.1, No. 2 spring bumper	31 (23)	315 (235)	23 (17)
Lower suspension arm x Stabilizer bar link	69	700	51

( ) For use with SST

Part tightened	N·m	kgf·cm	ft·lbf
Stabilizer bar x Stabilizer bar link	19	190	14
Stabilizer bar bracket x Chassis frame	37	375	27
REAR AXLE			
Hub nut	110	1,150	83
Axle housing x Backing plate	69	700	51
Brake line union nut	15	155	11
ABS speed sensor x Axle housing	8.0	82	71 in.·lbf
REAR DIFFERENTIAL			
LH differential case x RH differential case	47	480	35
Differential carrier x Bearing cap	113	1,150	83
Differential case x Ring gear	125	1,270	92
Differential carrier x Axle housing	73	740	54
Drive pinion x Companion flange	See page SA−133		
REAR SUSPENSION			
Shock absorber x Chassis frame	20	200	15
Shock absorber x Axle housing	87	890	64
U−bolt x Spring seat	133	1,350	98
Leaf spring front side set nut	170	1,735	125
Leaf spring x Shackle	170	1,735	125
Shackle x Chassis frame	170	1,735	125
Leaf spring center bolt	44	450	33
Bracket x Axle housing	29	296	21
Stabilizer bar link x Chassis frame	69	704	51
Stabilizer bar x Stabilizer bar link	69	704	51

SFI (1GR−FE)

SERVICE DATA

SS1MK−01

Fuel pressure	Fuel pressure	at idle	281 to 287 kPa (2.87 to 2.93 kgf·cm^2, 40.8 to 41.7 psi)
		remains for 5 minutes after engine has stopped	147 kPa (1.5 kgf·cm^2, 21 psi) or more
Fuel pump	Resistance	at 20˚C (68˚F)	0.2 to 3.0 Ω
Injector	Resistance Injection volume Difference between each cylinder Fuel leakage	at 20˚C (68˚F)	11.6 to 12.4 Ω 76 to 91 cm (4.6 to 5.5 cu in.) per 15 15 cm^3 (0.9 cu in.) or less 1 drop or less per 12 min.
MAF meter	Resistance (THA−E2)	at −20˚C (−4˚F) at 20˚C (68˚F) at 60˚C (140˚F)	13.6 to 18.4 kΩ 2.21 to 2.69 kΩ 0.49 to 0.67 kΩ
VSV for ACIS	Resistance	at 20˚C (68˚F)	33 to 39 Ω
Fuel pump resistor	Resistance	at 20˚C (68˚F)	0.70 to 0.76 Ω
VSV for EVAP	Resistance	at 20˚C (68˚F)	26 to 30 Ω
ECT sensor	Resistance	at 20˚C (68˚F) at 80˚C (176˚F)	2.32 to 2.59 kΩ 0.310 to 0.326 kΩ
Fuel cut rpm		Fuel cut off rpm Fuel return rpm	2,500 rpm 1,200 rpm
Throttle body	Standard percentage of the valve opening angle Resistance	 at 20˚C (68˚F)	60% or more 0.3 to 100 Ω
Camshaft timing oil control valve	Resistance	at 20˚C (68˚F)	6.9 to 7.9 Ω
Knock sensor	Resistance	at 20˚C (68˚F)	120 to 280 kΩ
Air fuel ratio sensor	Resistance at 20˚C (68˚F) terminal 1 (HT) − 2 (+B) at 500˚C (932˚F) terminal 1 (HT) − 2 (+B) terminal 1 (HT) − 4 (AF)		 1.8 to 3.4 Ω 5.0 to 7.5 Ω No continuity
Heated oxygen sensor	Resistance	at 20˚C (68˚F)	5 to 10 Ω

SS1ML−01

TORQUE SPECIFICATION

Part tightened	N·m	kgf·cm	ft·lbf
Fuel tank band x Body	62	632	45
Fuel pressure regulator x Fuel delivery pipe	9.0	92	80 in.·lbf
V−bank cover	7.5	76	66 in.·lbf
Air cleaner	8.0	82	71
Fuel delivery pipe x Intake manifold	15	153	11
Intake air surge tank x surge tank stay	21	214	16
Intake air surge tank x throttle body bracket	21	214	16
Intake air surge tank x Intake manifold	28	286	21
Fuel pressure regulator x Fuel delivery pipe	9.0	92	80 in.·lbf
Fuel pipe bracket x Body	20	204	15
Charcoal canister x Body	14.7	150	11
Throttle body x Intake manifold	11	112	9
Camshaft timing oil control valve x Cylinder head	9.0	92	80 in.·lbf
ECT sensor x Front water bypass joint	20	204	15
Knock sensor x Cylinder block	20	204	15
Water outlet pipe x Cylinder block	9.0	92	80 in.·lbf
Accelerator pedal x Body	5.0	51	44 in.·lbf

SFI (2UZ−FE)

SERVICE DATA

SS0CB−24

Fuel pump	Resistance	at 20°C (68°F)	0.2 to 3.0 Ω
Fuel pressure regulator	Fuel pressure	at no vacuum	265 to 304 kPa (2.7 to 3.1 kgf/cm^2, 38 to 44 psi)
Injector	Resistance Injection volume Difference between each cylinder Fuel leakage	at 20°C (68°F)	13.4 to 14.2 Ω 56 to 69 cm^3 (3.4 to 4.2 cu in.) per 15 seconds 13 cm^3 (0.8 cu in.) or less 1 drop or less per 12 minutes
MAF meter	Resistance (THA − E2)	at −20°C (−4°F) at 20°C (68°F) at 60°C (140°F)	12.5 to 16.9 kΩ 2.19 to 2.67 kΩ 0.50 to 0.68 kΩ
Throttle body	Throttle body fully closed angle		5.5°
Throttle control motor	Motor resistance	at 20°C (68°F)	0.3 to 100 Ω
VSV for EVAP	Resistance	at 20°C (68°F)	30 to 34 Ω
VSV for ACIS	Resistance	at 20°C (68°F)	33 to 39 Ω
VT sensor	Resistance	Cold Hot	835 to 1,400 Ω 1,060 to 1,645 Ω
Knock sensor	Resistance	at 20°C (68°F)	120 to 280 Ω
ECT sensor	Resistance	at −20°C (−4°F) 0°C (32°F) 20°C (68°F) 40°C (104°F) 60°C (140°F) 80°C (176°F)	10 to 20 kΩ 4 to 7 kΩ 2 to 3 kΩ 0.9 to 1.3 kΩ 0.4 to 0.7 kΩ 0.2 to 0.4 kΩ
Air−fuel ratio sensor	Heater coil resistance	at 20°C (68°F)	11 to 16 kΩ
Heated oxygen sensor	Heater coil resistance	at 20°C (68°F)	11 to 16 kΩ
Accelerator pedal position sensor	Standard throttle valve opening percentage Sensor lever full−open position		60 % or more
Fuel cut rpm		Fuel return rpm	1,400 rpm
Fuel pump resister		at 20°C (68 °F)	0.70 to 0.76 kΩ

SS0CC−23

TORQUE SPECIFICATION

Part tightened		N·m	kgf·cm	ft·lbf
Fuel pressure pulsation damper x Delivery pipe	for use with SST	33 39	340 400	24 29
Fuel pressure regulator x RH delivery pipe		7.5	80	66 in.·lbf
Front fuel pipe x Lower intake manifold		7.5	80	66 in.·lbf
Fuel return pipe x Delivery pipe		7.5	80	66 in.·lbf
Delivery pipe x Intake manifold		21	214	15
Fuel tank band x Body		62	632	45
Fuel pressure regulator x Delivery pipe		7.5	76	66 in.·lbf
Throttle body x Intake manifold		18	185	13
ECT sensor x Front water bypass joint		19.6	200	14
Knock sensor x Cylinder head		20	204	15
Air−fuel ratio sensor x Exhaust manifold		44	450	32
Heated oxygen sensor x Front exhaust pipe		44	450	32
Fuel pump resister x Body		8	82	71 in.·lbf
Camshaft oil control valve x Cylinder head		7.5	80	66 in.·lbf
Air pump assembly x Cylinder head		16	163	12

STEERING

SERVICE DATA

SS08W−05

POWER STEERING FLUID		
Oil level rise	Maximum	5 mm (0.20 in.)
Oil pressure at idle speed with valve closed	Minimum	8,336 kPa (85 kgf/cm^2, 1,209 psi)
STEERING WHEEL		
Steering wheel freeplay	Maximum	30 mm (1.18 in.)
Steering effort at idle speed	Reference:	4.9 N·m (50 kgf·cm, 43 in.·lbf)
PS VANE PUMP (1GR−FE)		
Pump shaft and front housing bushing oil clearance	Maximum	0.07 mm (0.0028 in.)
Vane plate thickness	STD	1.405−1.411 mm (0.05531−0.05555 in.)
Vane plate and pump rotor groove clearance	Maximum	0.03 mm (0.0012 in.)
Flow control valve spring length	Minimum	36.9 mm (1.453 in.)
Pump rotating torque	Maximum	0.27 N·m (2.8 kgf·cm, 2.4 in.·lbf) or less
PS VANE PUMP (2UZ−FE)		
Pump shaft and front housing bushing oil clearance	STD	0.03−0.05 mm (0.0012−0.0020 in.)
Pump shaft and front housing bushing oil clearance	Maximum	0.07 mm (0.0028 in.)
Vane plate height	Minimum	8.6 mm (0.339 in.)
Vane plate thickness	Minimum	1.397 mm (0.0550 in.)
Vane plate length	Minimum	14.991 mm (0.5902 in.)
Vane plate and pump rotor groove clearance	Maximum	0.033 mm (0.0013 in.)
Vane plate length	Pump rotor and cam ring mark	
	None	14.999−15.001 mm (0.59051−0.59059 in.)
	1	14.997−14.999 mm (0.59043−0.59051 in.)
	2	14.995−14.997 mm (0.59035−0.59043 in.)
	3	14.993−14.995 mm (0.59027−0.59035 in.)
	4	14.991−14.993 mm (0.59020−0.59027 in.)
Flow control valve spring length	Minimum	33.2 mm (1.307 in.)
Pump rotating torque	Maximum	0.28 N·m (2.8 kgf·cm, 2.4 in.·lbf) or less
PS GEAR		
Steering rack runout	Maximum	0.09 mm (0.0035 in.)
Total preload	Turning	1.0−1.45 N·m (10−10.45 kgf·cm, 8.7−12.6 in.·lbf)

SS08X−06

TORQUE SPECIFICATION

Part tightened		N·m	kgf·cm	ft·lbf
STEERING COLUMN (Standard Cab, Access Cab)				
Steering wheel pad set screw (Torx® screw)		8.8	90	78 in.·lbf
Steering wheel set nut		50	510	37
Control valve shaft x No. 2 intermediate shaft assembly		35	360	26
No. 2 intermediate shaft assembly x Sliding yoke		35	360	26
Sliding yoke x No. 2 universal joint assembly		35	360	26
No. 2 universal joint assembly x Main shaft assembly		35	360	26
Steering column assembly set nut		26	260	19
Column hole cover set bolt		8.0	82	71 in.·lbf
Shift lever set bolt	A/T	18	180	13
Non−tilt steering column:		−	−	−
Shift lever housing x Column upper tube	A/T	12	120	9
Turn signal bracket x Column upper tube		7.5	75	65 in.·lbf
Column upper tube x Column tube assembly		19	195	14
Tilt steering column:		−	−	−
Shift lever housing x Column housing support	A/T	12	120	9
Turn signal bracket x Steering column housing		7.5	75	65 in.·lbf
Column housing support x Column tube assembly		19	195	14
STEERING COLUMN (Double Cab)				
Steering wheel pad set screw (Torx® screw)		8.8	90	78 in.·lbf
Steering wheel set nut		50	510	37
Control valve shaft x No. 2 intermediate shaft assembly		35	360	26
No. 2 intermediate shaft assembly x Sliding yoke		35	360	26
No. 2 universal joint assembly x Sliding yoke		35	360	26
No. 2 universal joint assembly x Main shaft assembly		35	360	26
Steering column assembly set nut		26	260	19
Column hole cover No. 2 set bolt		8.0	82	71 in.·lbf
Shift lever set bolt		18	180	13
Shift lever housing x Column tube assembly		12	120	9
Turn signal bracket x Steering column housing		7.5	75	65 in.·lbf
Tilt lever lock shaft		9.0	90	78 in.·lbf
PS VANE PUMP (1GR−FE)				
Union bolt x Pressure feed tube		46.5	474	34
Bracket x Pump assembly		21	210	15
Front housing x Rear housing		22	220	16
Pressure port union x Front housing		69	700	51
Suction port union x Front housing		12	120	9
Oil pressure switch x Front housing		21	210	15
PS VANE PUMP (2UZ−FE)				
Union bolt x Pressure feed tube		46.5	475	34
PS vane pump assembly set stud bolt		22	220	16
PS vane pump assembly set bolt and nut		44	450	33
Suction port union set bolt		13	130	9

Pressure port union	83	850	61
Front housing x Rear housing	24	240	17
PS GEAR			
Turn pressure tube union nut	13 (15)	135 (150)	10 (11)
Tie rod end lock nut	55	560	41
Rack x Rack end	76 (103)	770 (1,050)	56 (76)
Rack guide spring cap lock nut	51 (69)	520 (700)	38 (51)
Rack housing cap	59	600	43
Self−locking nut	30	300	22
Control valve housing set bolt	18	185	13
PS gear assembly set bolt	165	1,700	123
PS gear assembly set bolt and nut	130	1,350	96
Bracket x Body Bolt and nut	165	1,700	123
Bracket x Body Stud bolt	20	200	15
Pressure feed and return tubes x Control valve housing	22 (25)	227 (250)	16 (18)
Control valve shaft x No. 2 intermediate shaft assembly	35	360	26
Tie rod end x Lower arm	91	930	67

( ): For use without SST

STARTING (1GR−FE)

SS1MB−01

SERVICE DATA

Starter (1.6 kW type)		
Rated voltage and output power		12 V 1.6 kW
No−load characteristics	Current	90 A or less at 11.5 V
Starter armature assy		
Commutator length	Standard	3.1 mm (0.122 in.)
	Minimum	3.8 mm (0.150 in.)
Starter commutator end frame assy		
Brush holder length	Standard	9.0 mm (0.354 in.)
	Minimum	4.0 mm (0.158 in.)
Starter armature assy		
Snap ring length	Maximum	5.0 mm (0.197 in.)
Starter (2.0 kW type)		
Rated voltage and output power		12 V 2.0 kW
No−load characteristics	Current	100 A or less at 11.5 V
Starter armature assy		
Circle runout	Maximum	0.05 mm (0.0020 in.)
Commutator diameter	Standard	35.0 mm (1.378 in.)
	Minimum	34.0 mm (1.339 in.)
Undercut depth	Standard	0.7 mm (0.028 in.)
	Minimum	0.2 mm (0.008 in.)
Starter yoke		
Shunt coil resistance	at 20°C (68°F)	1.5 to 1.9 Ω
Brush		
Brush length	Standard	15.0 mm (0.591 in.)
	Minimum	9.0 mm (0.354 in.)
Starter brush holder assy		
Brush spring load	Standard	21.5 to 27.5 N (2.2 to 2.8 kgf, 4.8 to 6.2 lbf)
	Minimum	12.7 N (1.3 kgf, 2.9 lbf)

SS1MC−01

TORQUE SPECIFICATION

Part Tightened	N·m	kgf·cm	ft·lbf
Starter assy x Transmission housing	37	377	27
Starter assy x Terminal 30	9.8	100	7
Starter commutator end frame assy x Starter drive housing assy (Starter Assy 1.6 kW)	6.0	61	53 in.·lbf
Starter drive housing assy x Repair service starter kit (Starter Assy 1.6 kW)	7.5	76	66 in.·lbf
Lead wire x Repair service starter kit (Starter Assy 1.6 kW)	10	102	7.4
Commutator end frame x Brush holder (Starter Assy 2.0 kW)	3.8	39	34 in.·lbf
Starter drive housing assy x Magnetic Starter Switch (Starter Assy 2.0 kW)	9.3	95	82 in.·lbf
Commutator end frame x Starter drive housing assy (Starter Assy 2.0 kW)	9.3	95	82 in.·lbf
Lead wire x Terminal C of starter (Starter Assy 2.0 kW)	5.9	60	52 in.·lbf
Engine wire x Cylinder block	13	133	10

STARTING (2UZ−FE)

SS0OD−03

SERVICE DATA

Starter (1.4 kW type)	Rated voltage and output power		12 V 1.4 kW
	No−load characteristics	Current	90 A or less at 11.5 V
		rpm	3,000 rpm or more
	Brush length	Standard	15.5 mm (0.610 in.)
		Minimum	10.0 mm (0.394 in.)
	Spring installed load	Standard	17.6 to 23.5 N (1.8 to 2.4 kgf, 4.0 to 5.3 lbf)
		Minimum	11.8 N (1.20 kgf, 2.7 lbf)
	Commutator		
	Diameter	Standard	30.0 mm (1.181 in.)
		Minimum	29.0 mm (1.142 in.)
	Undercut depth	Standard	0.6 mm (0.024 in.)
		Minimum	0.2 mm (0.008 in.)
	Circle runout	Maximum	0.05 mm (0.0020 in.)
	Magnetic switch		
	Contact plate for wear	Maximum	0.9 mm (0.035 in.)
Starter (2.0 kW type)	Rated voltage and output power		12 V 2.0 kW
	No−load characteristics	Current	100 A or less at 11.5 V
		rpm	2,500 rpm or more
	Brush length	Standard	15.0 mm (0.591 in.)
		Minimum	9.0 mm (0.354 in.)
	Spring installed load	Standard	21.5 to 27.5 N (2.2 to 2.8 kgf, 4.8 to 6.2 lbf)
		Minimum	12.7 N (1.3 kgf, 2.9 lbf)
	Commutator		
	Diameter	Standard	35.0 mm (1.378 in.)
		Minimum	34.0 mm (1.339 in.)
	Undercut depth	Standard	0.7 mm (0.028 in.)
		Minimum	0.2 mm (0.008 in.)
	Circle runout	Maximum	0.05 mm (0.0020 in.)
	Field frame		
	Shunt coil resistance	at 20°C (68°F)	1.5 to 1.9 Ω
	Magnetic switch		
	Contact plate for wear	Maximum	0.9 mm (0.035 in.)

SS0OE−02

TORQUE SPECIFICATION

Part tightened		N·m	kgf·cm	ft·lbf
Terminal 30 nut, Terminal C nut x Terminal bolt		17	170	13
End cover x Magnetic switch housing	1.4 kW type	2.5	25	22 in.·lbf
	2.0 kW type	3.6	37	32 in.·lbf
End cover x Brush holder	1.4 kW type	1.5	15	13 in.·lbf
	2.0 kW type	3.8	39	34 in.·lbf
Starter hosing x Magnetic switch	1.4 kW type	5.9	60	52 in.·lbf
	2.0 kW type	9.3	95	82 in.·lbf
End cover with field frame x Magnetic switch	1.4 kW type	5.9	60	52 in.·lbf
	2.0 kW type	9.3	95	82 in.·lbf
Lead wire of field coil x Terminal C		5.9	60	52 in.·lbf
Wire clamp, Starter wire x Starter		9.81	100	84 in.·lbf
Starter x Cylinder block		39	400	29

STANDARD BOLT

HOW TO DETERMINE BOLT STRENGTH

SS0ZS−01

Bolt Type				Class
Hexagon Head Bolt		Stud Bolt	Weld Bolt	
Normal Recess Bolt	Deep Recess Bolt			
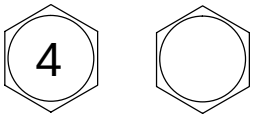 No Mark	 No Mark	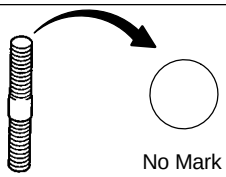 No Mark	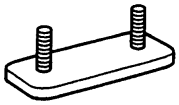	4T
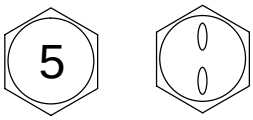	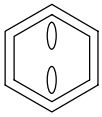			5T
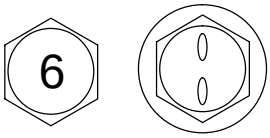 w/ Washer	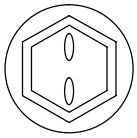 w/ Washer			6T
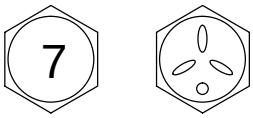	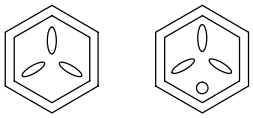			7T
				8T
				9T
	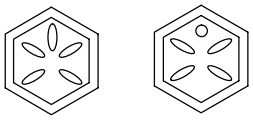			10T
	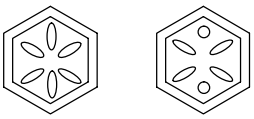			11T

B06431

SS0ZU−01

HOW TO DETERMINE NUT STRENGTH

Nut Type			Class
Present Standard Hexagon Nut	Old Standard Hexagon Nut		
	Cold Forging Nut	Cutting Processed Nut	
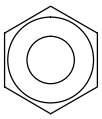 No Mark			4N
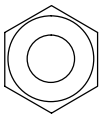 No Mark (w/ Washer)	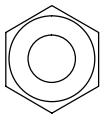 No Mark (w/ Washer)	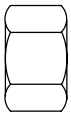 No Mark	5N (4T)
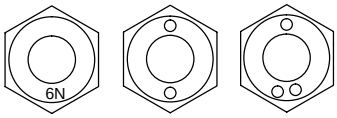 6N			6N
	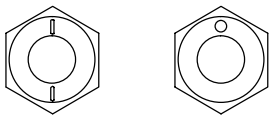	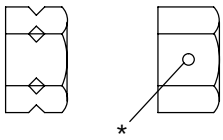 *	7N (5T)
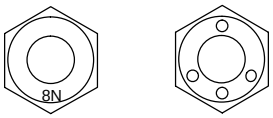 8N			8N
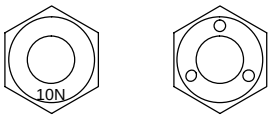 10N	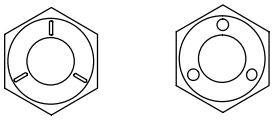	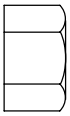 No Mark	10N (7T)
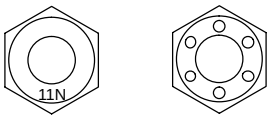 11N			11N
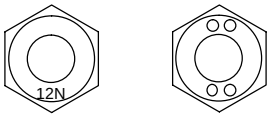 12N			12N

*: Nut with 1 or more marks on one side surface of the nut.

B06432

HINT:

Use the nut with the same number of the nut strength classification or the greater than the bolt strength classification number when tightening parts with a bolt and nut.

Example: Bolt = 4T

Nut = 4N or more

SS0ZT−01

SPECIFIED TORQUE FOR STANDARD BOLTS

Class	Diameter mm	Pitch mm	Specified torque					
			Hexagon head bolt			Hexagon flange bolt		
			N·m	kgf·cm	ft·lbf	N·m	kgf·cm	ft·lbf
4T	6	1	5	55	48 in.·lbf	6	60	52 in.·lbf
	8	1.25	12.5	130	9	14	145	10
	10	1.25	26	260	19	29	290	21
	12	1.25	47	480	35	53	540	39
	14	1.5	74	760	55	84	850	61
	16	1.5	115	1,150	83	−	−	−
5T	6	1	6.5	65	56 in.·lbf	7.5	75	65 in.·lbf
	8	1.25	15.5	160	12	17.5	175	13
	10	1.25	32	330	24	36	360	26
	12	1.25	59	600	43	65	670	48
	14	1.5	91	930	67	100	1,050	76
	16	1.5	140	1,400	101	−	−	−
6T	6	1	8	80	69 in.·lbf	9	90	78 in.·lbf
	8	1.25	19	195	14	21	210	15
	10	1.25	39	400	29	44	440	32
	12	1.25	71	730	53	80	810	59
	14	1.5	110	1,100	80	125	1,250	90
	16	1.5	170	1,750	127	−	−	−
7T	6	1	10.5	110	8	12	120	9
	8	1.25	25	260	19	28	290	21
	10	1.25	52	530	38	58	590	43
	12	1.25	95	970	70	105	1,050	76
	14	1.5	145	1,500	108	165	1,700	123
	16	1.5	230	2,300	166	−	−	−
8T	8	1.25	29	300	22	33	330	24
	10	1.25	61	620	45	68	690	50
	12	1.25	110	1,100	80	120	1,250	90
9T	8	1.25	34	340	25	37	380	27
	10	1.25	70	710	51	78	790	57
	12	1.25	125	1,300	94	140	1,450	105
10T	8	1.25	38	390	28	42	430	31
	10	1.25	78	800	58	88	890	64
	12	1.25	140	1,450	105	155	1,600	116
11T	8	1.25	42	430	31	47	480	35
	10	1.25	87	890	64	97	990	72
	12	1.25	155	1,600	116	175	1,800	130

TRANSFER

SERVICE DATA

SS1MT−01

Transfer unit	Hose installation depth		13 mm (0.51 in.) or more
Input shaft	Input shaft snap ring thickness	Mark	
		A	2.10 to 2.15 mm (0.0827 to 0.0846 in.)
		B	2.15 to 2.20 mm (0.0846 to 0.0866 in.)
		C	2.20 to 2.25 mm (0.0866 to 0.0886 in.)
		D	2.25 to 2.30 mm (0.0886 to 0.0906 in.)
		E	2.30 to 2.35 mm (0.0906 to 0.0925 in.)
		F	2.35 to 2.40 mm (0.0925 to 0.0945 in.)
		G	2.40 to 2.45 mm (0.0945 to 0.0965 in.)
		H	2.45 to 2.50 mm (0.0965 to 0.0984 in.)
		J	2.50 to 2.55 mm (0.0984 to 0.1004 in.)
		K	2.55 to 2.60 mm (0.1004 to 0.1024 in.)
		L	2.60 to 2.65 mm (0.1024 to 0.1043 in.)
		M	2.65 to 2.70 mm (0.1043 to 0.1063 in.)
		N	2.70 to 2.75 mm (0.1063 to 0.1083 in.)
		P	2.75 to 2.80 mm (0.1083 to 0.1102 in.)
		Q	2.80 to 2.85 mm (0.1102 to 0.1122 in.)
		R	2.85 to 2.90 mm (0.1122 to 0.1142 in.)
		S	2.90 to 2.95 mm (0.1142 to 0.1161 in.)
		T	2.95 to 3.00 mm (0.1161 to 0.1181 in.)
		U	3.00 to 3.05 mm (0.1181 to 0.1201 in.)
	Input shaft journal outer diameter	Minimum	47.59 mm (1.8736 in.)
	Input shaft bushing inside diameter	Maximum	39.14 mm (1.5409 in.)

Rear output shaft	Drive sprocket thrust clearance	Standard	0.10 to 0.25 mm (0.0039 to 0.0098 in.)
		Maximum	0.25 mm (0.0098 in.)
	Rear output shaft journal outer diameter		
	Part A	Minimum	27.98 mm (1.1016 in.)
	Part B	Minimum	36.98 mm (1.4561 in.)
	Drive sprocket radial clearance	Standard	0.010 to 0.055 mm (0.0004 to 0.0022 in.)
		Maximum	0.055 mm (0.0022 in.)
	Front drive shift fork to clutch sleeve clearance	Maximum	1.0 mm (0.039 in.)
	High and low shift fork to clutch sleeve clearance	Maximum	1.0 mm (0.039 in.)
	Rear output shaft snap ring thickness	Mark	
		K	2.00 to 2.05 mm (0.0787 to 0.0807 in.)
		L	2.05 to 2.10 mm (0.0807 to 0.0827 in.)
		A	2.10 to 2.15 mm (0.0827 to 0.0846 in.)
		B	2.15 to 2.20 mm (0.0846 to 0.0866 in.)
		C	2.20 to 2.25 mm (0.0866 to 0.0886 in.)
		D	2.25 to 2.30 mm (0.0886 to 0.0906 in.)
		E	2.30 to 2.35 mm (0.0906 to 0.0925 in.)
		F	2.35 to 2.40 mm (0.0925 to 0.0945 in.)
		G	2.40 to 2.45 mm (0.0945 to 0.0965 in.)
		H	2.45 to 2.50 mm (0.0965 to 0.0984 in.)
		J	2.50 to 2.55 mm (0.0984 to 0.1004 in.)
Planetary gear	Pinion gear thrust clearance	Standard	0.11 to 0.84 mm (0.0043 to 0.0331 in.)
		Maximum	0.84 mm (0.0331 in.)
	Pinion gear radial clearance	Standard	0.009 to 0.038 mm (0.0004 to 0.0015 in.)
		Maximum	0.038 mm (0.0015 in.)
	Outer bearing snap ring thickness	Mark	
		1	1.45 to 1.50 mm (0.0571 to 0.0591 in.)
		2	1.50 to 1.55 mm (0.0591 to 0.0610 in.)
		3	1.55 to 1.60 mm (0.0610 to 0.0630 in.)
		4	1.60 to 1.65 mm (0.0630 to 0.0650 in.)
		5	1.65 to 1.70 mm (0.0650 to 0.0669 in.)

SS1MU−01

TORQUE SPECIFICATION

Part tightened	N·m	kgf·cm	ft·lbf
Rear propeller shaft x Rear differential	88	897	65
Center support bearing x Body	40	410	30
Rear propeller shaft x Transfer	88	897	65
Transfer x Transfer adaptor	24	244	17
Front propeller shaft x Front differential	74	750	54
Front propeller shaft x Transfer	88	897	65
Engine rear mounting x Transfer	65	664	48
Engine rear mounting x Crossmember	18	185	13
Crossmember x Frame	72	740	53
Heat insulator x Crossmember	16	164	12
Front exhaust pipe x Exhaust manifold	62	630	46
Filler plug x Transfer	37	380	27
Head screw plug x Transfer	19	190	14
Oil pump body x Front case	7.5	76	66 in.·lbf
Separator with oil strainer x Front case	7.5	76	66 in.·lbf
Transfer 4WD position switch	37	377	27
Transfer for L4 position switch	37	377	27
Actuator assembly set bolt	20	204	15
Shift fork shaft stopper set bolt	19	190	14
Straight screw plug	19	190	14
Front case x Rear case	28	285	21
Extension housing x Rear case	12	122	9
Front and rear companion flange lock nut	118	1,203	87
Upper cover x Front case	18	184	13
Front bearing retainer x Front case	11.5	117	8
Protector x Front case	18	184	13
Vehicle speed sensor assembly set bolt	11	112	8

ACC CUT RELAY

ST0Q1−01

INSPECTION

1. REMOVE ACC CUT RELAY

Remove the cowl side trim board LH and ACC cut relay.

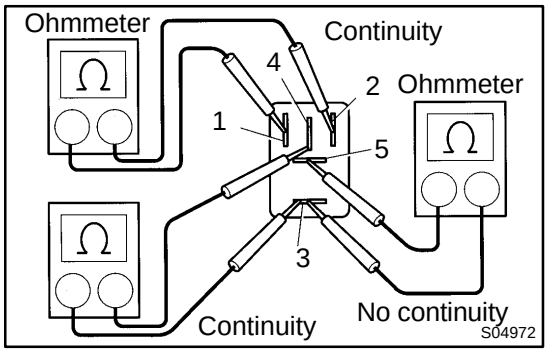

2. INSPECT ACC CUT RELAY CONTINUITY

(a) Using an ohmmeter, check that there is continuity between terminals 1 and 2.

If there is no continuity, replace the relay.

(b) Check that there is no continuity between terminals 3 and 5.

If there is continuity, replace the relay.

(c) Check that there is continuity between terminals 3 and 4.

If there is no continuity, replace the relay.

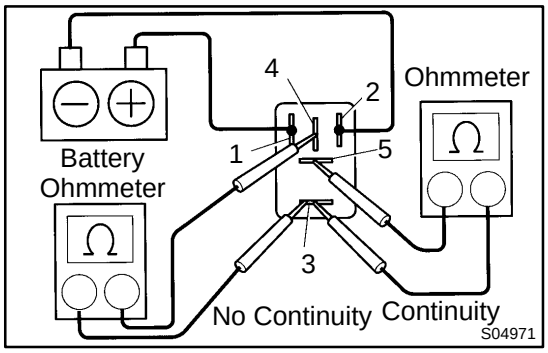

3. INSPECT ACC CUT RELAY OPERATION

(a) Apply battery positive voltage across terminals 1 and 2.

(b) Using an ohmmeter, check that there is no continuity between terminals 3 and 4.

If there is continuity, replace the relay.

(c) Using an ohmmeter, check that there is continuity between terminals 3 and 5.

If there is no continuity, replace the relay.

4. REINSTALL ACC CUT RELAY

STARTER (1.6 kW)

COMPONENTS

ST0PM−01

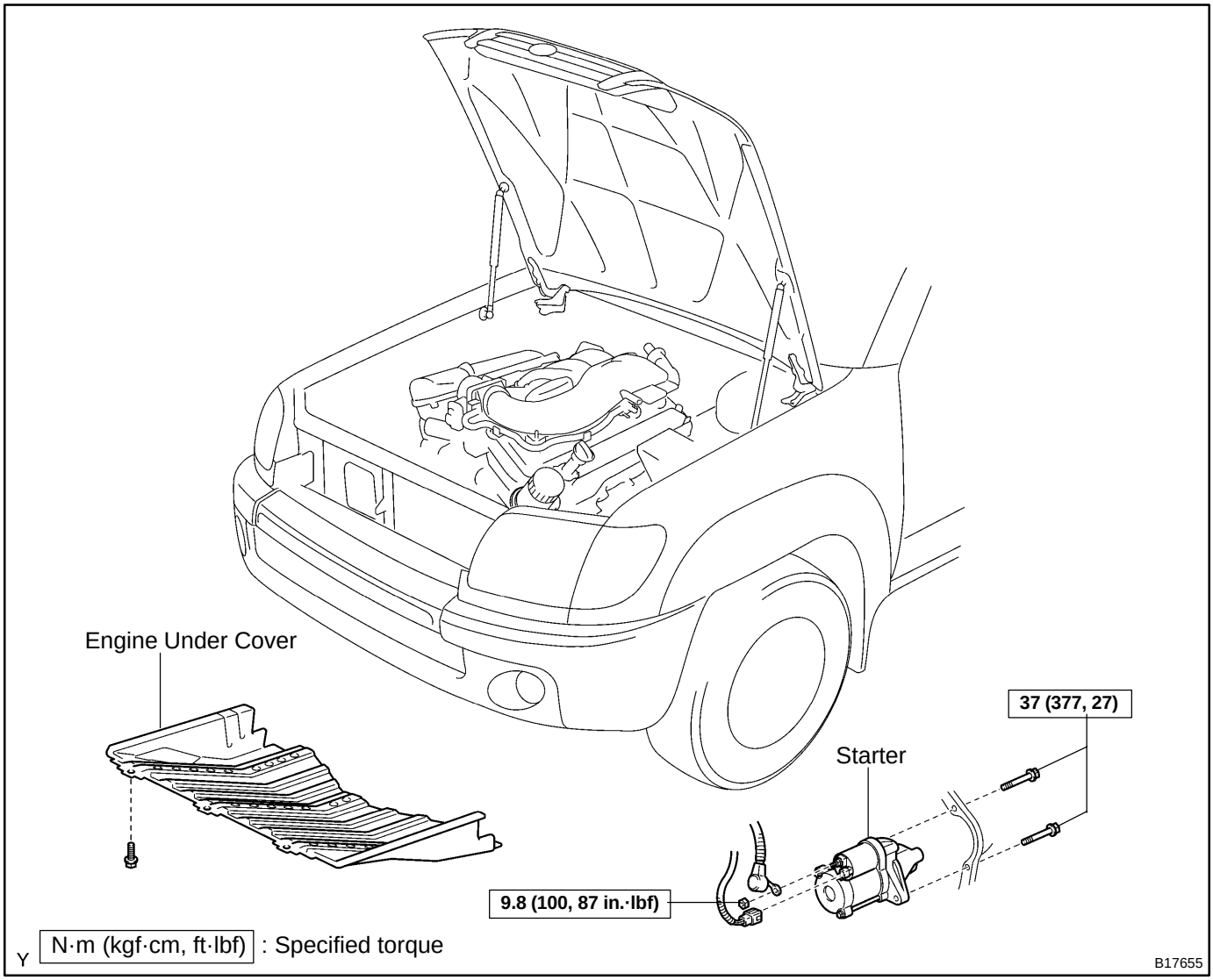

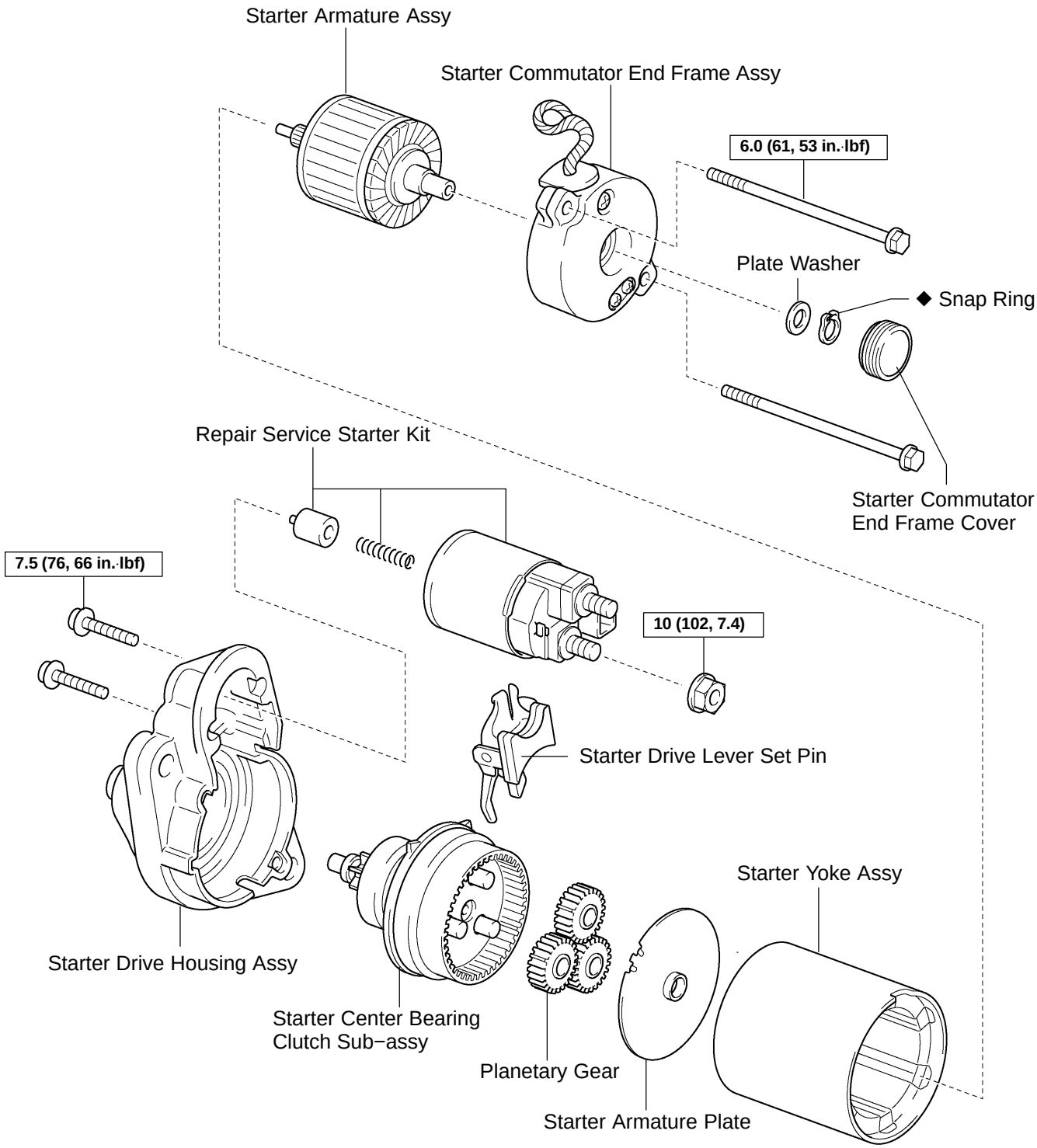

N·m (kgf·cm, ft·lbf) : Specified torque
◆ Non−reusable part

B17606

ST0PO–01

DISASSEMBLY

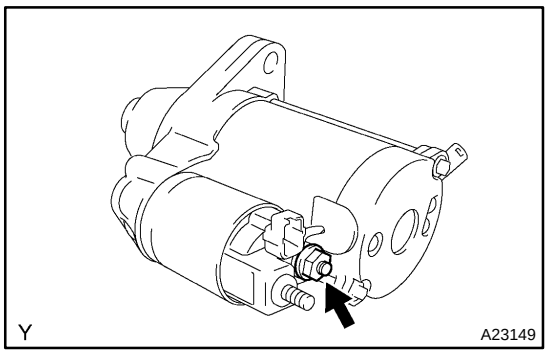

1. REMOVE REPAIR SERVICE STARTER KIT

(a) Remove the nut, and disconnect the lead wire from the repair service starter kit.

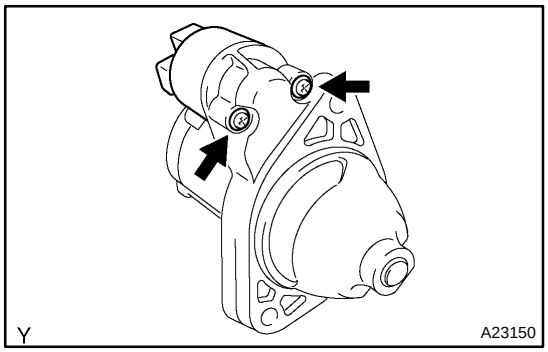

(b) Remove the 2 screws which are used to secure the repair service starter kit to the starter drive housing.

(c) Remove the repair service starter kit.

(d) Remove the return spring and plunger.

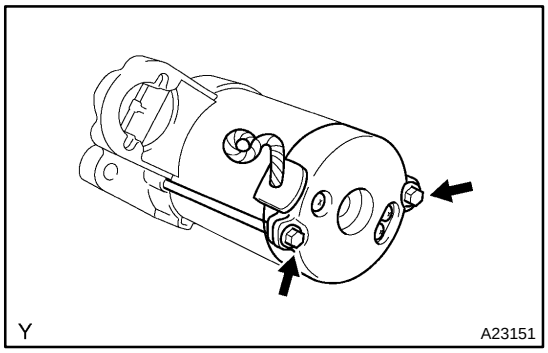

2. REMOVE STARTER YOKE ASSY

(a) Remove the 2 through bolts, and pull out the starter yoke assy together with the commutator end frame assy.

3. REMOVE STARTER COMMUTATOR END FRAME ASSY

(a) Remove the commutator end frame assy from the starter yoke assy.

4. REMOVE STARTER ARMATURE PLATE

(a) Remove the starter armature plate from the starter yoke assy.

5. REMOVE STARTER COMMUTATOR END FRAME COVER

(a) Using a screwdriver, remove the cover.

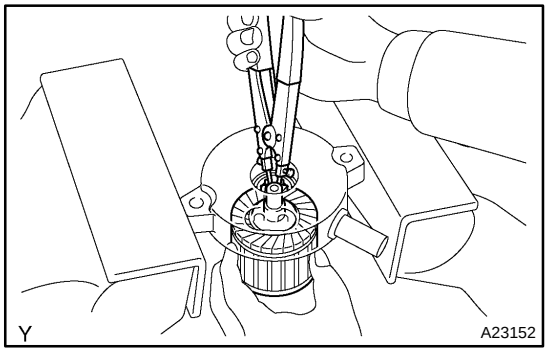

6. REMOVE STARTER ARMATURE ASSY

(a) Using snap ring pliers, remove the snap ring and plate washer.

(b) Remove the starter armature assy from commutator end frame assy.

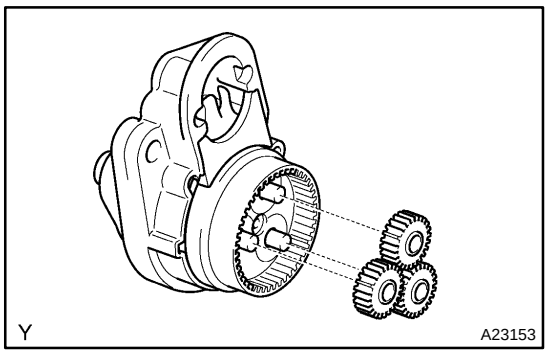

7. REMOVE PLANETARY GEAR

(a) Remove the 3 planetary gears.

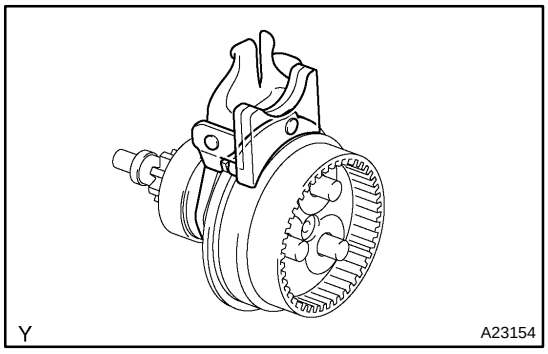

8. REMOVE STARTER CENTER BEARING CLUTCH SUB−ASSY

(a) Remove the starter center bearing clutch and drive lever set pin together from the starter drive housing.

(b) Remove the drive lever set pin from the starter center bearing clutch.

ST0PP−01

INSPECTION

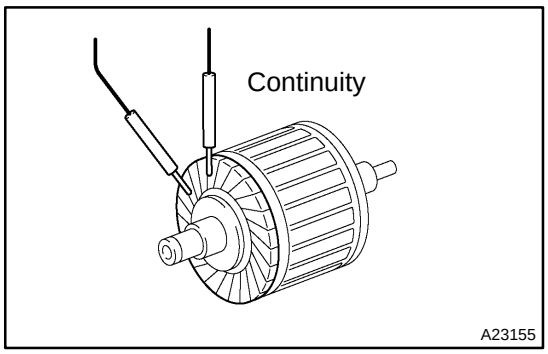

1. INSPECT COMMUTATOR FOR OPEN CIRCUIT

Using an ohmmeter, check that there is continuity between the segments of the commutator.

If there is no continuity between any segment, replace the armature.

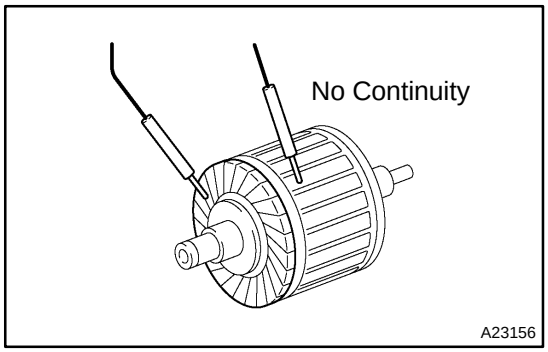

2. INSPECT COMMUTATOR FOR GROUND

(a) Using an ohmmeter, check that there is no continuity between the commutator and armature coil core.

If there is continuity, replace the armature.

(b) Check that the commutator for dirty and burm on surface.

If the surface is dirty or burnt, correct it with sandpaper (No.400) or on a lathe.

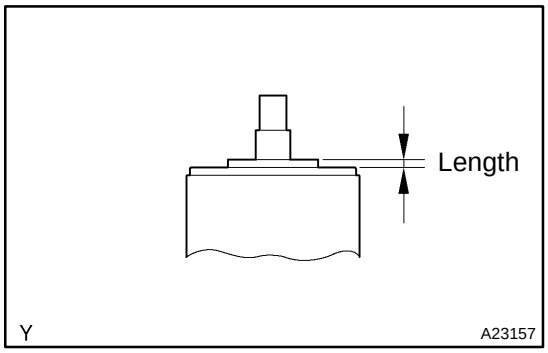

3. INSPECT COMMUTATOR LENGTH

(a) Using vernier calipers, measure the commutator length.

Standard length: 3.1 mm (0.122 in.)

Maximum length: 3.8 mm (0.150 in.)

If the length is greater than maximum, replace the armature.

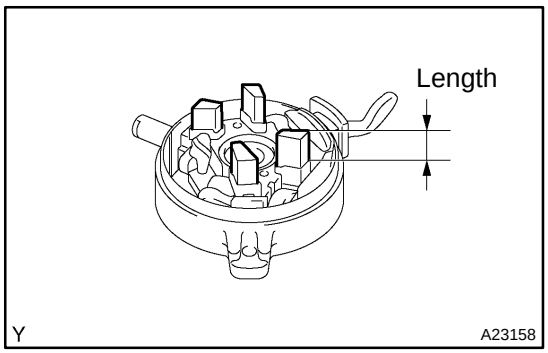

4. INSPECT STARTER COMMUTATOR END FRAME ASSY

(a) Using vernier calipers, measure the brush holder length.

Standard length: 9.0 mm (0.354 in.)

Maximum length: 4.0 mm (0.158 in.)

If the length is less than minimum, replace the starter commutator end frame assy.

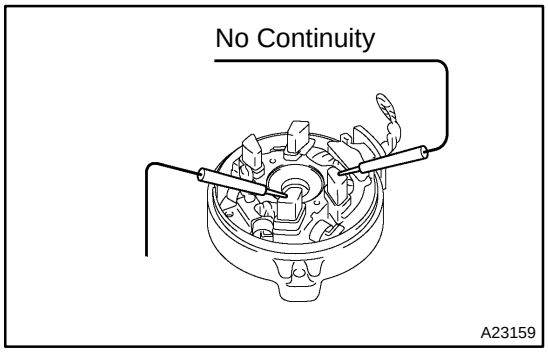

(b) Check the brush holder.

(1) Using an ohmmeter, check that there is no continuity between the positive (+) and negative (−) brush holders.

If the there is continuity, repair or replace the starter commutator end frame assy.

If there is no continuity, repair or replace the field frame.

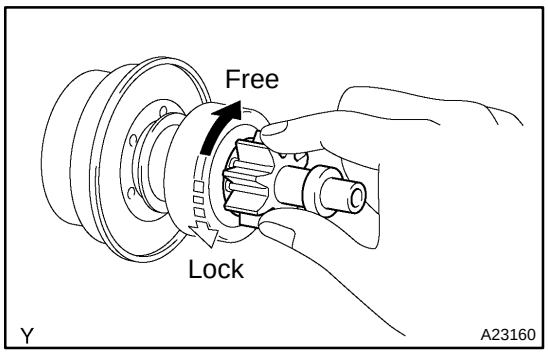

5. INSPECT CLUTCH PINION GEAR

Rotate the pinion gear clockwise, and check that it turns freely. Check that it locks by rotating the pinion gear counterclockwise. If necessary, replace the clutch assembly.

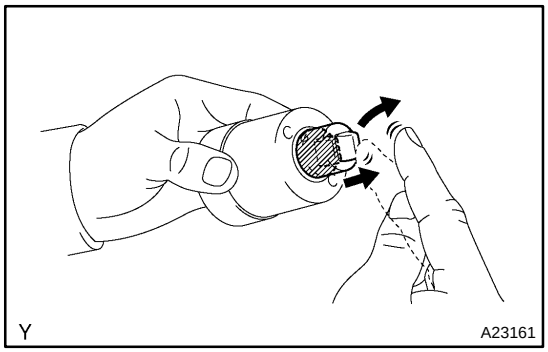

6. INSPECT REPAIR SERVICE STARTER KIT

(a) Check the plunger.
  (1) Push in the plunger and check that it returns quickly to its original position.

If necessary, replace the repair service starter kit.

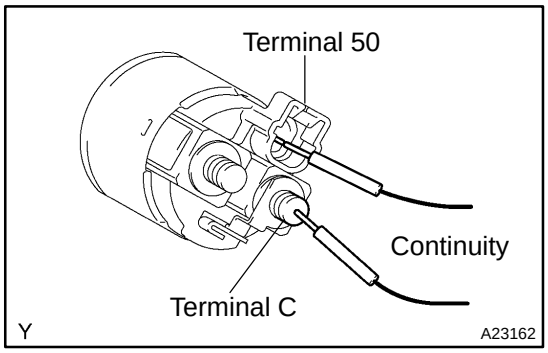

7. INSPECT MAGNET STATER SWITCH

(a) Check the pull−in coil for open circuit.
  (1) Using an ohmmeter, check that there is continuity between terminal 50 and C.

If there is no continuity, replace the repair service starter kit.

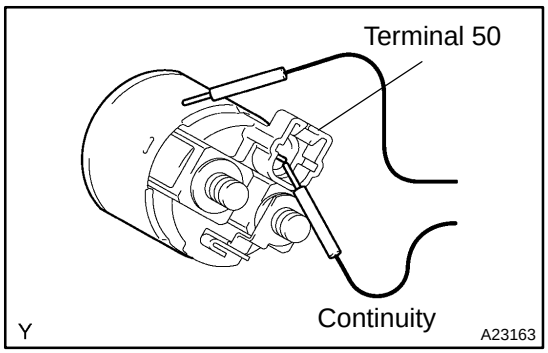

(b) Check whether or not the hold−in coil has an open circuit.
  (1) Using an ohmmeter, check that there is continuity between terminal 50 and the switch body.

If there is no continuity, replace the repair service starter kit.

ST0PS−01

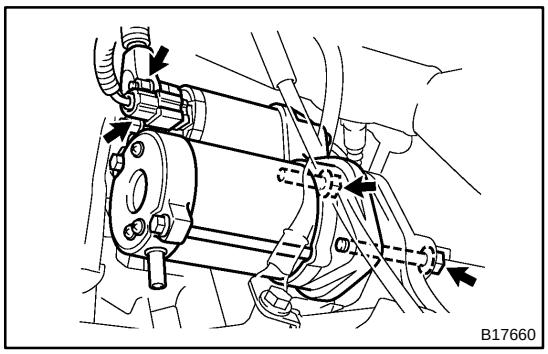

INSTALLATION

1. INSTALL STARTER

Install the starter with the 2 bolts.

Torque: 37 N·m (377 kgf·cm, 27 ft·lbf)

(a) Connect the wire harness to the terminal 30 and install the nut.

Torque: 9.8 N·m (100 kgf·cm, 7 ft·lbf)

(b) Connect the terminal 50 to the starter.

2. INSTALL ENGINE UNDER COVER ASSY REAR

3. CONNECT CABLE TO NEGATIVE (−) BATTERY TERMINAL

ST0PR−01

REASSEMBLY

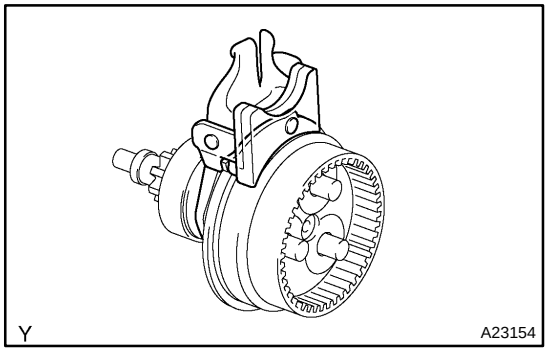

1. INSTALL STARTER CENTER BEARING CLUTCH SUB−ASSY

(a) Install the drive lever set pin to the starter center bearing clutch.

(b) Install the starter center bearing clutch and drive lever set pin together to the starter drive housing.

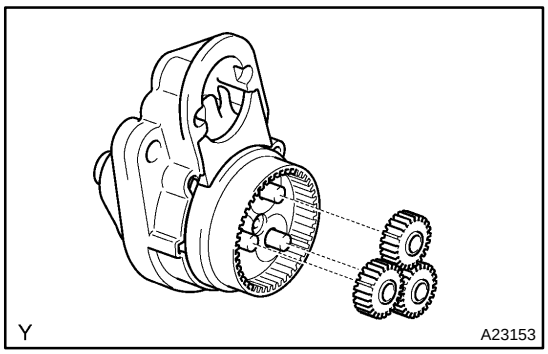

2. INSTALL PLANETARY GEAR

(a) Apply grease to the planetary gears and pin parts of the planetary shaft.

(b) Install the 3 planetary gears.

3. INSTALL STARTER ARMATURE ASSY

(a) Apply grease to the plate washer and armature shaft.

(b) Install the armature shaft to the starter commutator end frame assy.

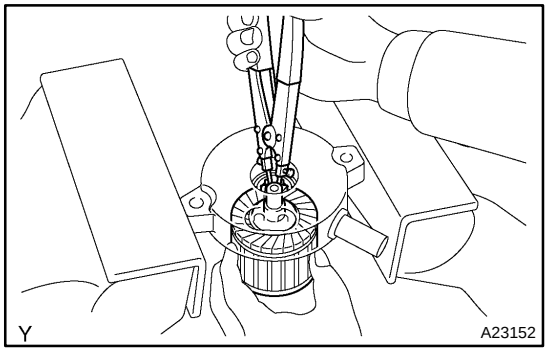

(c) Using snap ring pliers, install the plate washer and new snap ring.

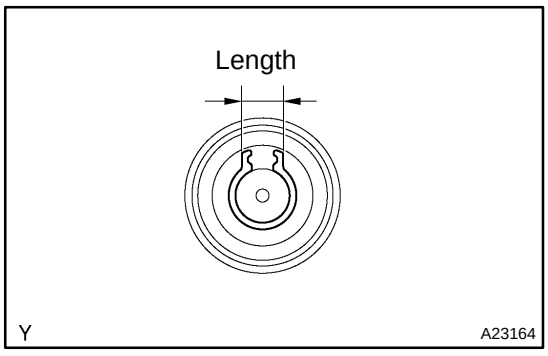

(d) Using vernier calipers, measure the snap ring.
Maximum length: 5.0 mm (0.197 in.)

If the length is greater than maximum, replace the new snap ring.

4. INSTALL STARTER COMMUTATOR END FRAME COVER

5. INSTALL STARTER ARMATURE PLATE

(a) Insert the starter armature plate to the starter yoke assy.

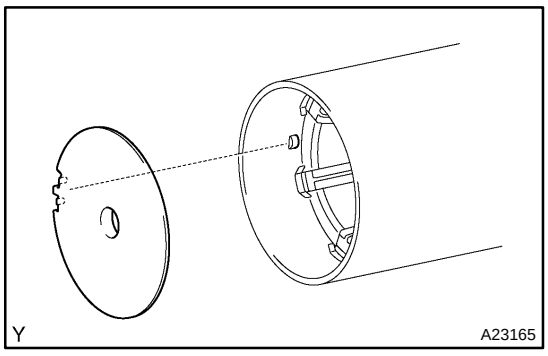

(b) Align the keyway of the plate with the key inside the starter yoke, and install the plate.

6. INSTALL STARTER COMMUTATOR END FRAME ASSY

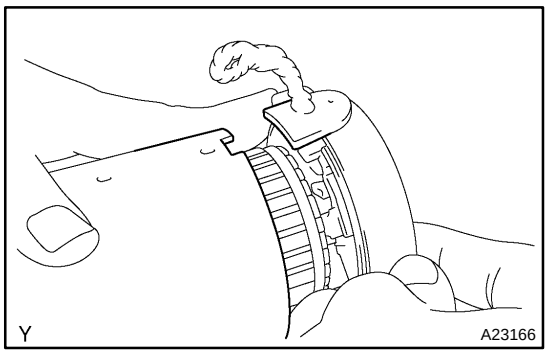

(a) Align the starter−commutator−rubber−end frame with the convex cutout of starter yoke.
(b) Install starter−commutator−end−frame to starter yoke assy.

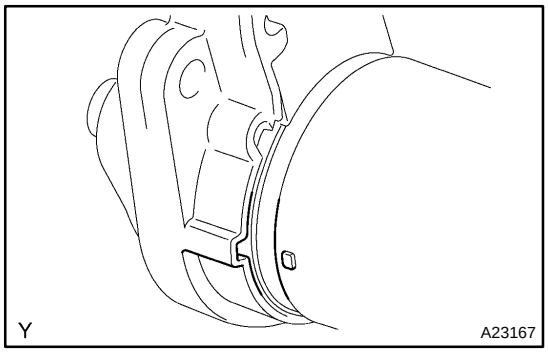

7. INSTALL STARTER YOKE ASSY
(a) Align the key of the starter yoke assy with the keyway of starter drive housing.

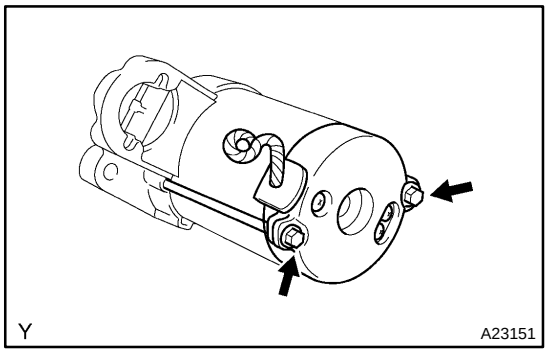

(b) Install the starter yoke assy with the 2 through bolts.
Torque: 6.0 N·m (61 kgf·cm, 53 in.·lbf)

8. INSTALL REPAIR SERVICE STARTER KIT
(a) Apply grease to the plunger and hook.

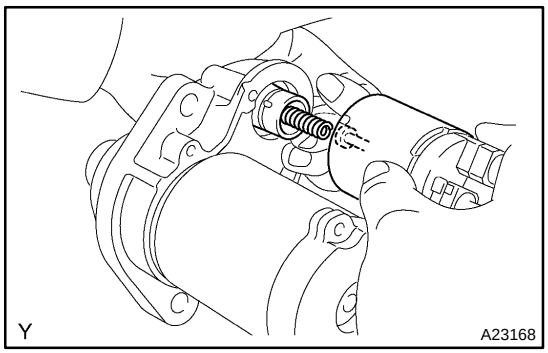

(b) Hang the plunger hook of the repair service starter kit to the drive lever.
(c) Install the plunger and return spring.

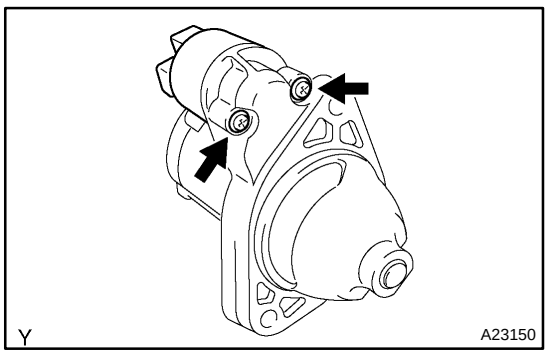

(d) Install the repair service starter kit with the 2 screws.
Torque: 7.5 N·m (76 kgf·cm, 66 in.·lbf)

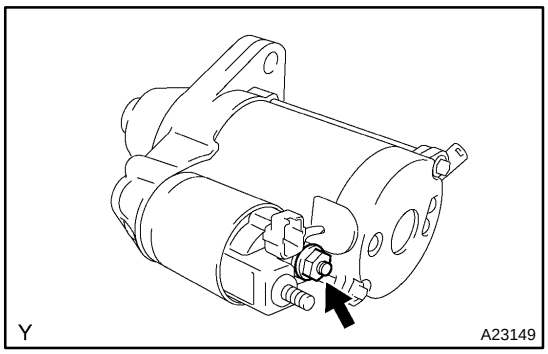

(e) Connect the lead wire to the terminal with the nut.
Torque: 10 N·m (102 kgf·cm, 7.4 ft·lbf)

ST0PN−01

REMOVAL

1. REMOVE ENGINE UNDER COVER

2. DISCONNECT CABLE FROM NEGATIVE (−) BATTERY TERMINAL

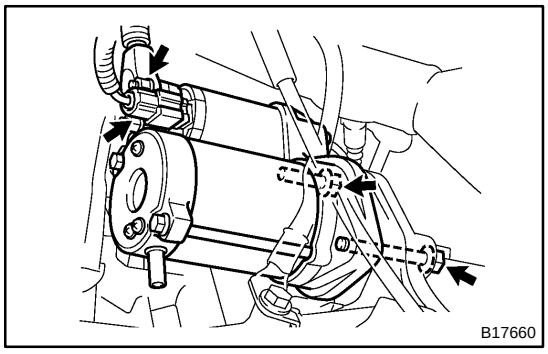

3. REMOVE STARTER ASSEMBLY

(a) Disconnect the terminal 50 connector from the starter.

(b) Remove the nut and disconnect the wire harness from terminal 30.

(c) Remove the 2 bolts and the starter.

ST0PQ−01

TEST

NOTICE:

These tests must be done within 3 to 5 seconds to avoid the coil to be burned − out.

1. INSPECT STARTER ASSY

(a) Do pull−in test.

(1) Disconnect the field coil lead wire from terminal C.

(2) Connect the battery to the magnetic switch as shown. Check that the clutch pinion gear protrudes.

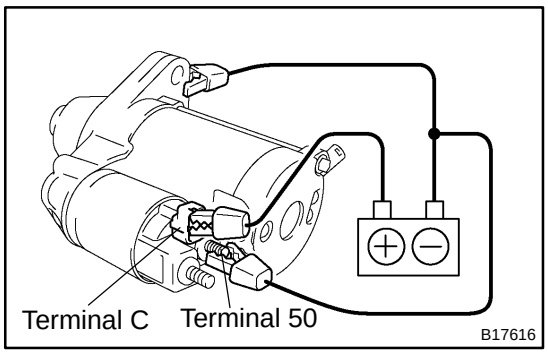

(b) Do holding test.

(1) Disconnect the negative (−) lead from the terminal C with the above condition (a) is being sustained. Check that the pinion gear remains protruded.

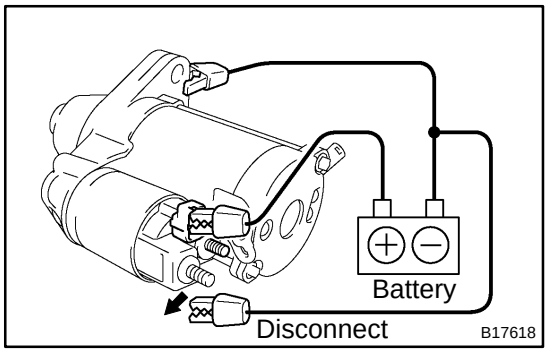

(c) Inspect clutch pinion gear return.

(1) Disconnect the negative (−) lead from the switch body. Check that the clutch pinion gear returns inward.

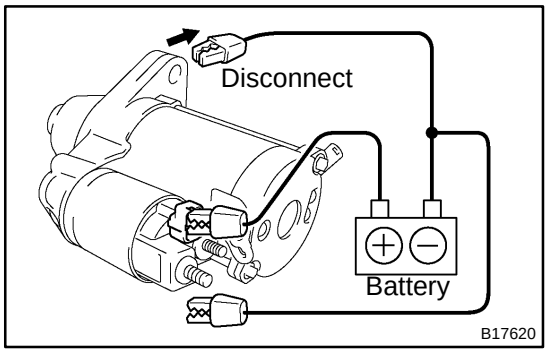

(d) Perform the operation test without load.

(1) Connect the field coil lead wire to terminal C.

Torque: 10 N·m (102 kgf·cm, 89 ft·lbf)

(2) Hold the starter with a vise.

(3) Connect the battery and ammeter to the starter as shown.

(4) Check that the ammeter indicates the specified current.

Specified current: 90 A or less at 11.5 V

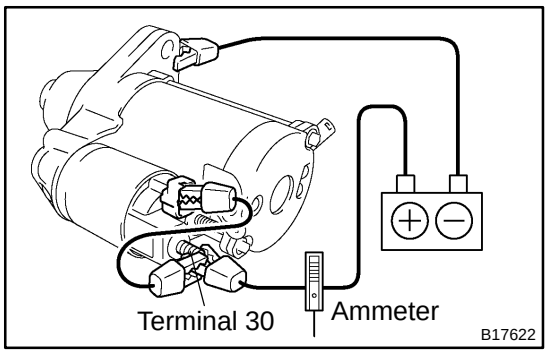

STARTER (2.0 kW)

COMPONENTS

ST0PT−01

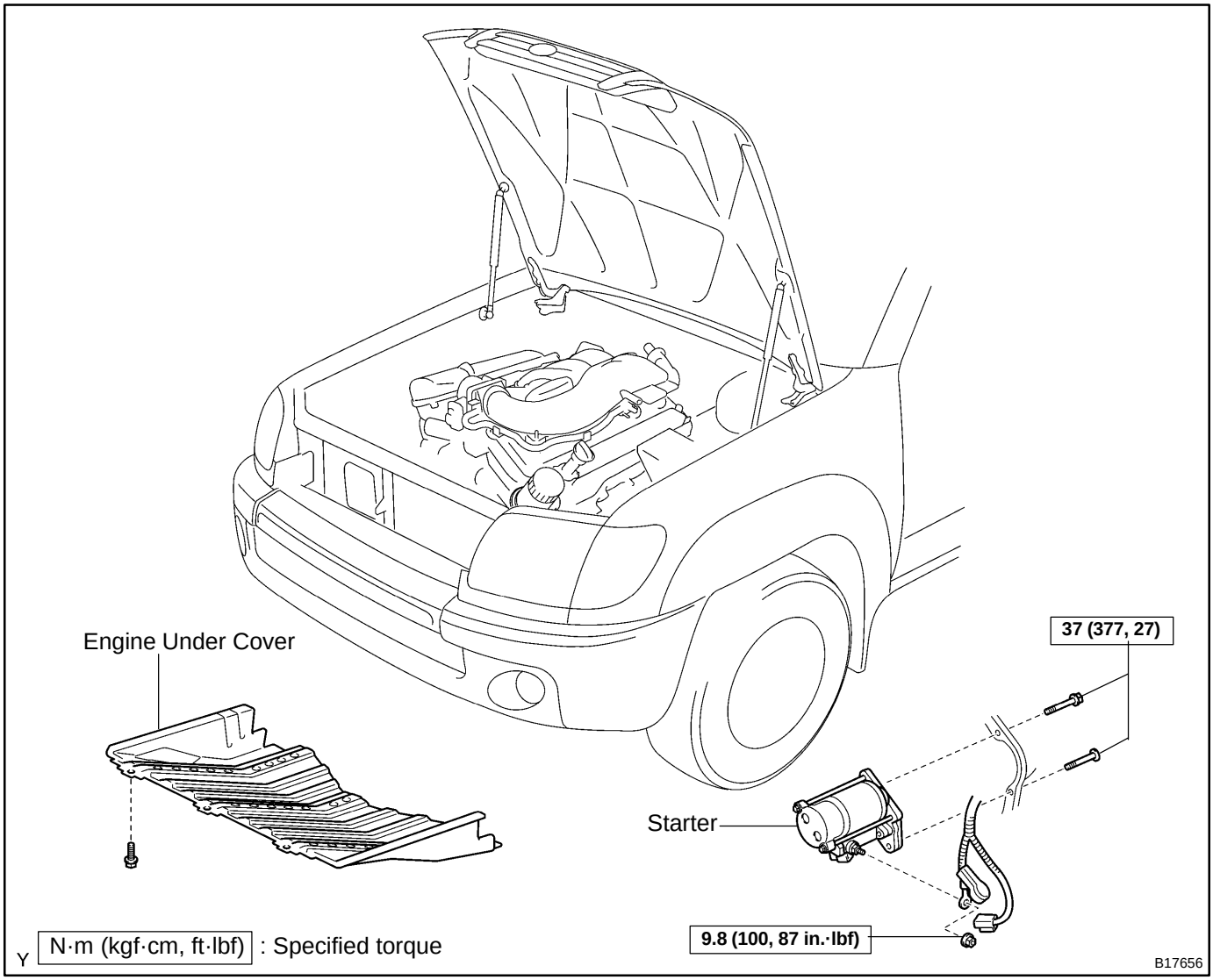

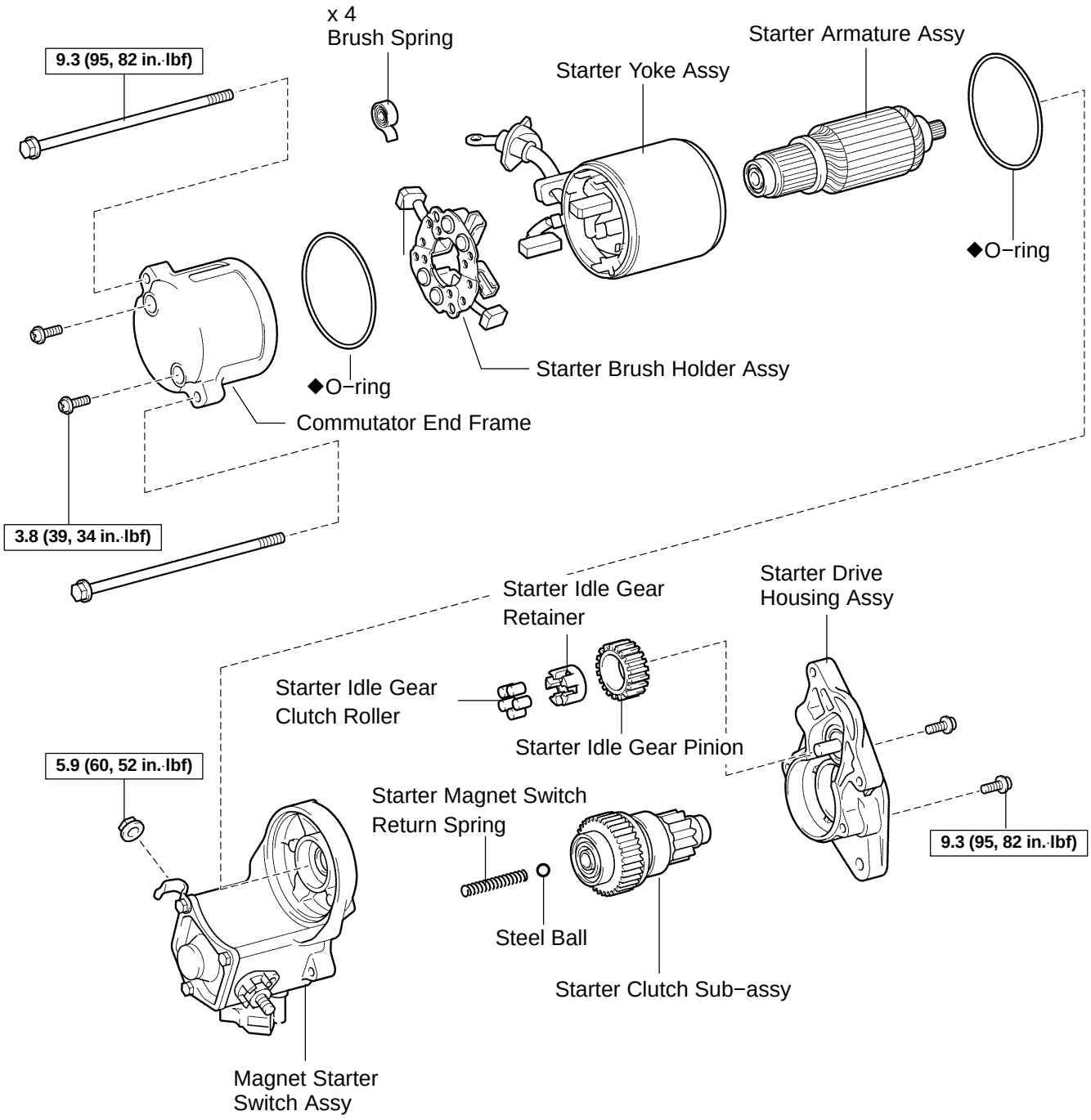

N·m (kgf·cm, ft·lbf) : Specified torque
◆ Non−reusable part

B17607

ST0PV−01

DISASSEMBLY

1. REMOVE STARTER YOKE ASSY

(a) Remove the nut, and disconnect the lead wire from the C terminal.
(b) Remove the 2 through bolts.
(c) Pull out the starter yoke and the armature together.
(d) Remove the O−ring from the starter yoke.

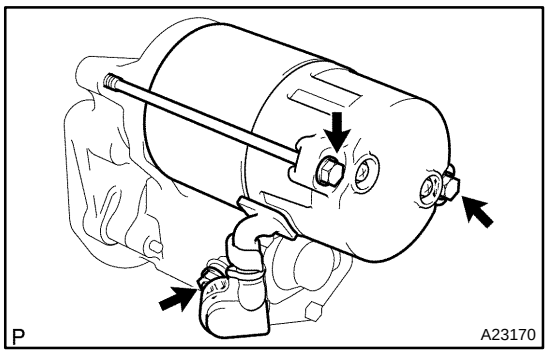

2. REMOVE MAGNET STARTER SWITCH ASSY

(a) Remove the 2 screws and magnet starter switch.

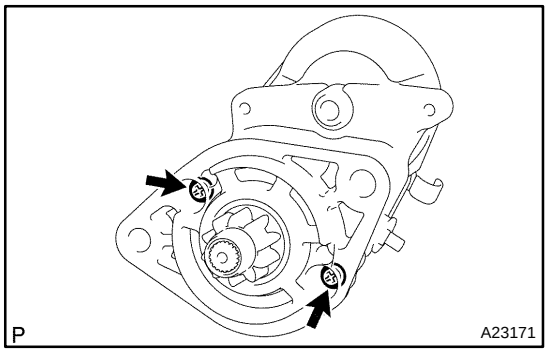

(b) Remove these parts from the starter drive housing.

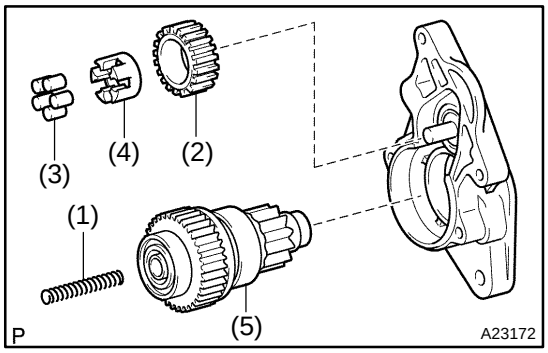

(1)	Starter magnet switch return spring
(2)	Starter idle gear pinion
(3)	Starter idle gear clutch roller
(4)	Starter idle gear retainer
(5)	Starter clutch

(c) Using a magnetic finger, remove the steel ball from the clutch shaft hole.

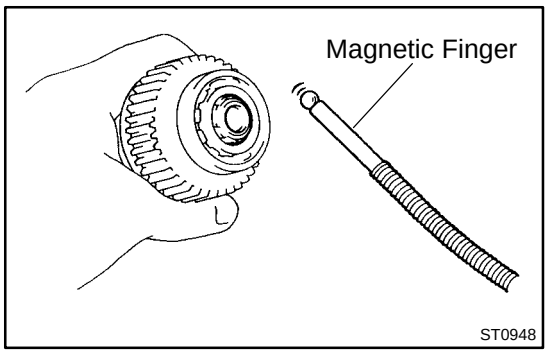

3. REMOVE STARTER BRUSH HOLDER ASSY

(a) Remove the 2 screws and end cover from the starter yoke.
(b) Remove the O−ring from the starter yoke.

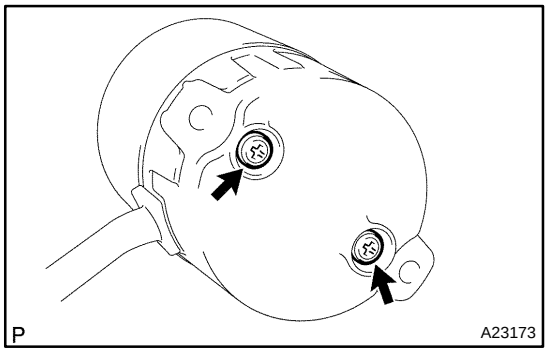

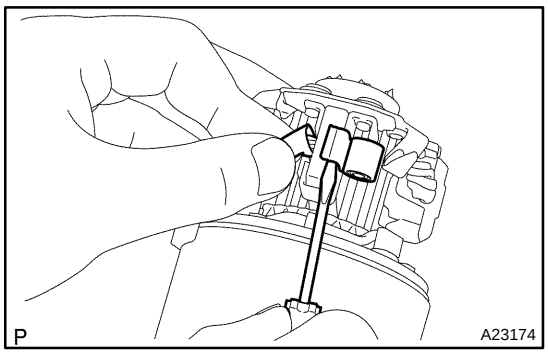

(c) Using a screwdriver, hold the spring back and disconnect the 4 brushes from the brush holder.

(d) Remove the brush holder from the armature.

4. REMOVE STARTER ARMATURE ASSY

ST0PW−01

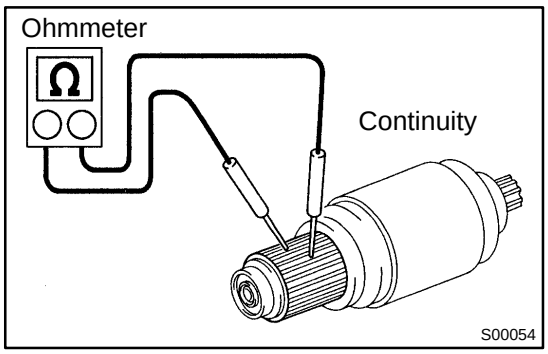

INSPECTION

1. INSPECT COMMUTATOR FOR OPEN CIRCUIT

Using an ohmmeter, check that there is continuity between the segments of the commutator.

If there is no continuity between any segment, replace the armature.

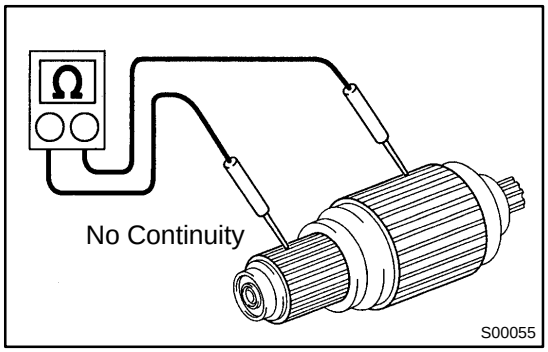

2. INSPECT COMMUTATOR FOR GROUND

(a) Using an ohmmeter, check that there is no continuity between the commutator and armature coil core.

If there is continuity, replace the armature.

(b) Check that the commutator for dirty and burm on surface.

If the surface is dirty or burnt, correct it with sandpaper (No.400) or on a lathe.

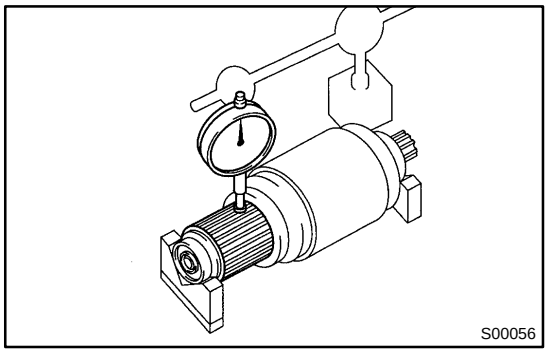

3. INSPECT COMMUTATOR CIRCLE RUNOUT

(a) Place the commutator on V−blocks.

(b) Using a dial indicator, measure the circle runout.

Maximum circle runout: 0.05 mm (0.0020 in.)

If the circle runout is greater than maximum, correct it on a lathe.

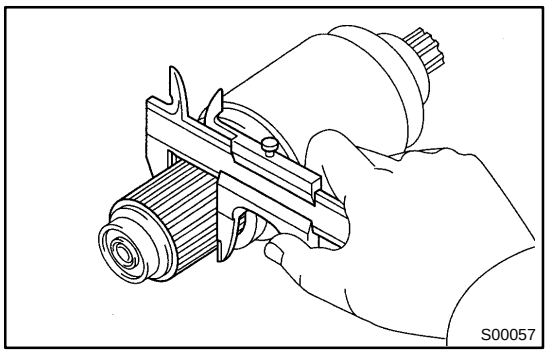

4. INSPECT COMMUTATOR DIAMETER

Using vernier calipers, measure the commutator diameter.

Standard diameter: 35.0 mm (1.378 in.)

Minimum diameter: 34.0 mm (1.339 in.)

If the diameter is less than minimum, replace the armature.

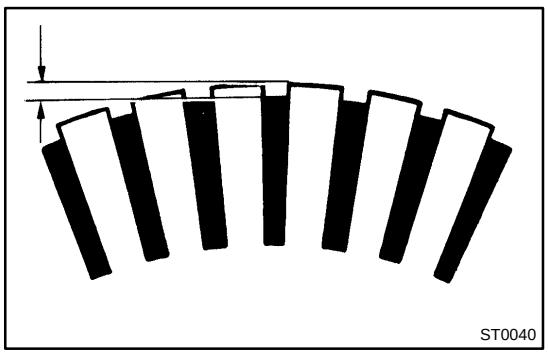

5. INSPECT UNDERCUT DEPTH

Check that the undercut depth is clean and free of foreign materials. Smooth out the edge.

Standard undercut depth: 0.7 mm (0.028 in.)

Minimum undercut depth: 0.2 mm (0.008 in.)

If the undercut depth is less than minimum, correct it with a hacksaw blade.

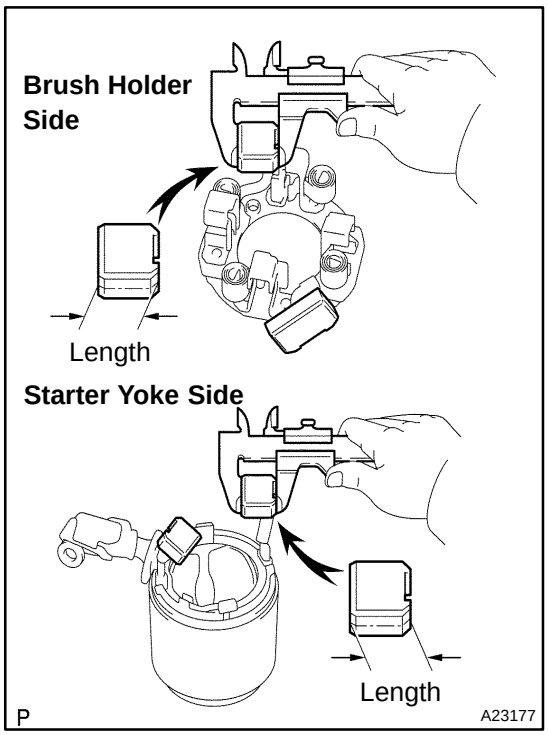

6. INSPECT BRUSH

(a) Check the brushes length

(1) Using vernier calipers, measure the brush length.

Standard length: 15.0 mm (0.591 in.)

Minimum length: 9.0 mm (0.354 in.)

If the length is less than minimum, replace the brush holder and starter yoke.

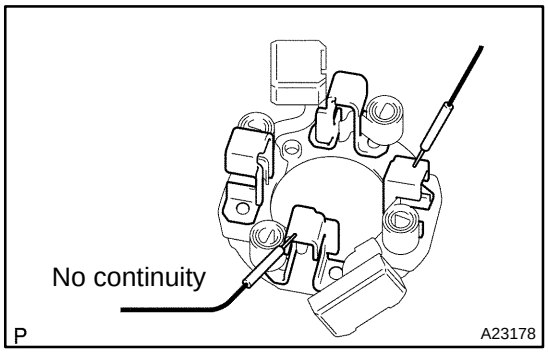

7. INSPECT STARTER BRUSH HOLDER ASSY

(a) Check the blush holder insulation

(1) Using an ohmmeter, check that there is no continuity between the positive (+) and negative (−) brush holders.

If there is continuity, repair or replace the brush holder.

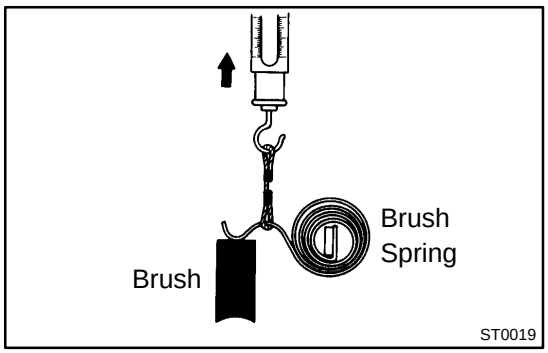

(b) Check the brush spring load.

(1) Take a pull scale reading at the instant the brush spring separates from the brush.

Standard spring load:

21.5 to 27.5 N (2.2 to 2.8 kgf, 4.8 to 6.2 lbf)

Minimum spring load: 12.7 N (1.3 kgf, 2.9 lbf)

If the spring load is less than the minimum, replace the brush holder.

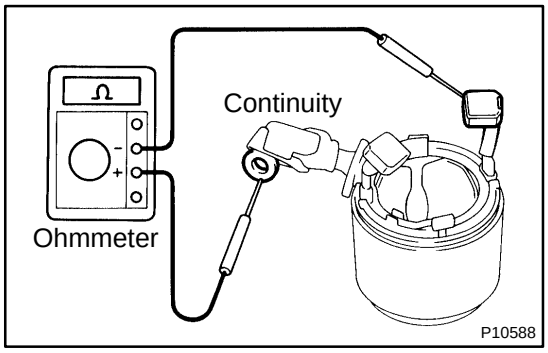

8. INSPECT FIELD COIL FOR OPEN CIRCUIT

Using an ohmmeter, check that there is continuity between the lead wire and field coil brush lead.

If there is no continuity, replace the field frame.

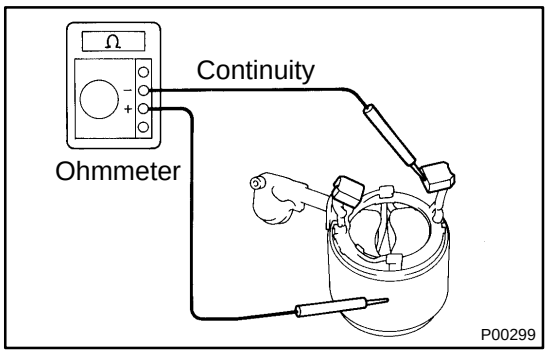

9. INSPECT SHUNT COIL FOR OPEN CIRCUIT

Using an ohmmeter, check that there is continuity between the field coil end and field frame.

If there is no continuity, repair or replace the field frame.

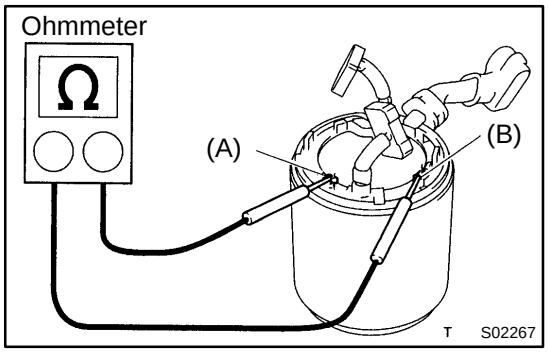

10. INSPECT SHUNT COIL FOR OPEN CIRCUIT

Using an ohmmeter, measure the resistance between shunt coil terminals (A) and (B).

Resistance: 1.5 to 1.9 Ω at 20 ˚C (68 ˚F)

If the resistance is not as specified, replace the field frame.

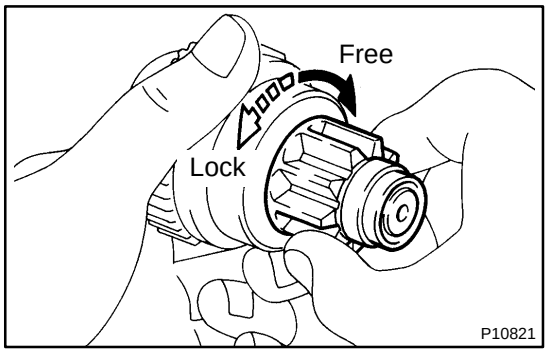

11. INSPECT CLUTCH PINION GEAR

Rotate the pinion gear clockwise, and check that it turns freely.

Check that it locks by rotating the pinion gear counterclockwise.

If necessary, replace the clutch assembly.

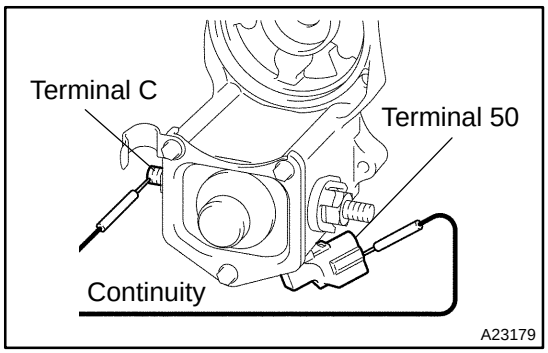

12. INSPECT MAGNET STATER SWITCH

(a) Check the pull−in coil for open circuit.

(1) Using an ohmmeter, check that there is continuity between terminal 50 and C.

If there is no continuity, replace the magnet starter switch.

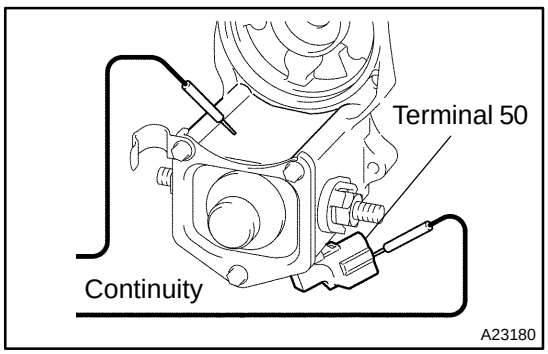

(b) Check whether or not the hold−in coil has an open circuit.

(1) Using an ohmmeter, check that there is continuity between terminal 50 and the switch body.

If there is no continuity, replace the magnet starter switch.

ST0PY−01

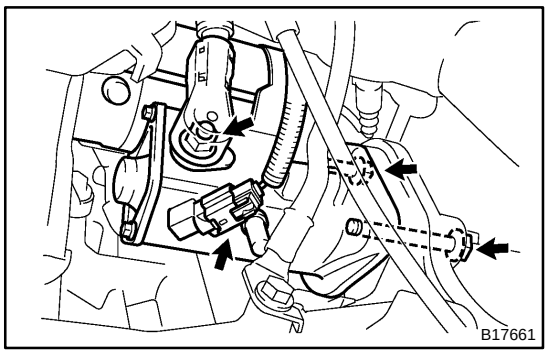

INSTALLATION

1. INSTALL STARTER

Install the starter with the 2 bolts.

Torque: 37 N·m (377 kgf·cm, 27 ft·lbf)

(a) Connect the wire harness to the terminal 30 and install the nut.

Torque: 9.8 N·m (100 kgf·cm, 7 ft·lbf)

(b) Connect the terminal 50 to the starter.

2. INSTALL ENGINE UNDER COVER ASSY REAR

3. CONNECT CABLE TO NEGATIVE (−) BATTERY TERMINAL

ST0PZ−01

REASSEMBLY

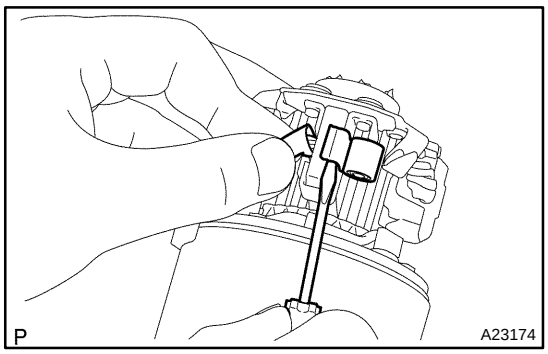

1. INSTALL STARTER BRUSH HOLDER ASSY

(a) Apply grease to the bearings, and install it to the starter yoke.

(b) Place the brush holder on the armature.

(c) Using a screwdriver, install the 4 brushes.

(d) Install a new O−ring to the groove of the field frame.

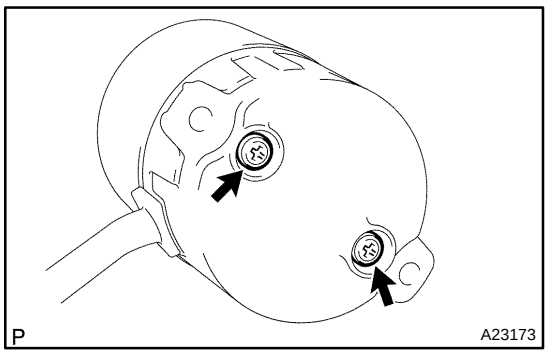

(e) Install the end frame with the 2 screws.
Torque: 3.8 N·m (39 kgf·cm, 34 in.·lbf)

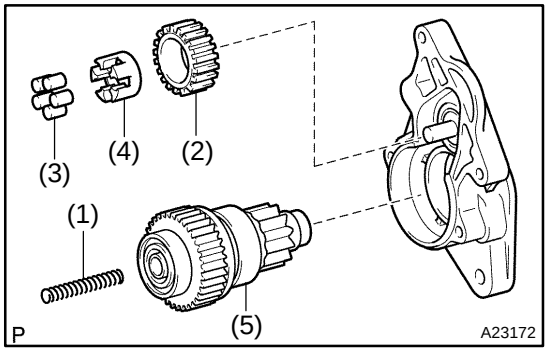

2. INSTALL MAGNET STARTER SWITCH ASSY

(a) Apply grease to the steel ball, and install it to the clutch shaft hole.

(b) Apply grease to the these parts (2) − (5), and install them to the starter drive housing.

(1)	Starter magnet switch return spring
(2)	Starter idle gear pinion
(3)	Starter idle gear clutch roller
(4)	Starter idle gear retainer
(5)	Starter clutch

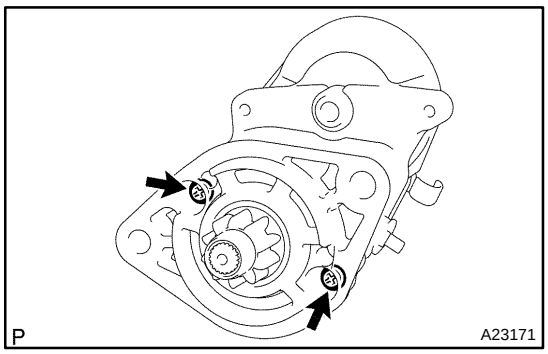

(c) Install the magnet starter switch with the 2 screws.
Torque: 9.3 N·m (95 kgf·cm, 82 in.·lbf)

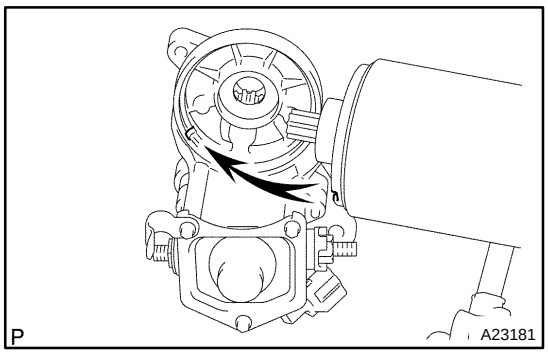

3. INSTALL STARTER YOKE ASSY

(a) Install a new O−ring to the groove of the starter yoke.

(b) Align the key of the starter yoke with the groove of the magnet starter switch.

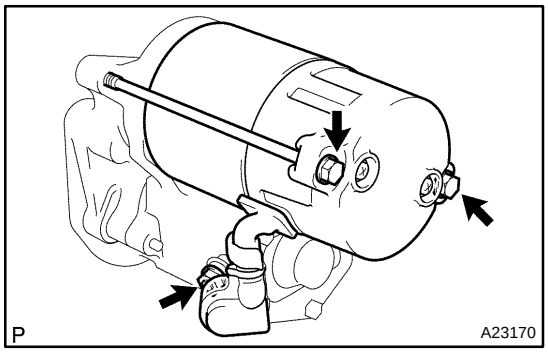

(c) Install the starter yoke and armature with the 2 through bolts.

Torque: 9.3 N·m (95 kgf·cm, 82 in.·lbf)

(d) Connect the lead wire to the C terminal with the nut.

Torque: 5.9 N·m (60 kgf·cm, 52 in.·lbf)

ST0PU−01

REMOVAL

1. REMOVE ENGINE UNDER COVER

2. DISCONNECT CABLE FROM NEGATIVE (−) BATTERY TERMINAL

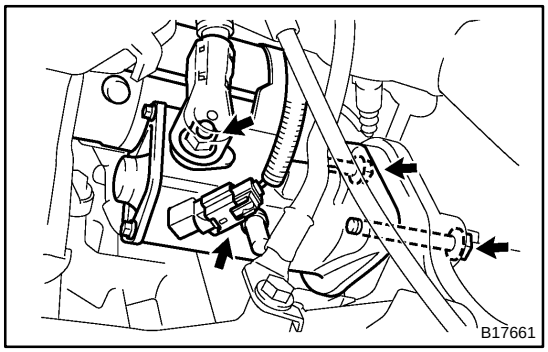

3. REMOVE STARTER ASSEMBLY

(a) Disconnect the terminal 50 connector from the starter.

(b) Remove the nut and disconnect the wire harness from terminal 30.

(c) Remove the 2 bolts and the starter.

ST0PX−01

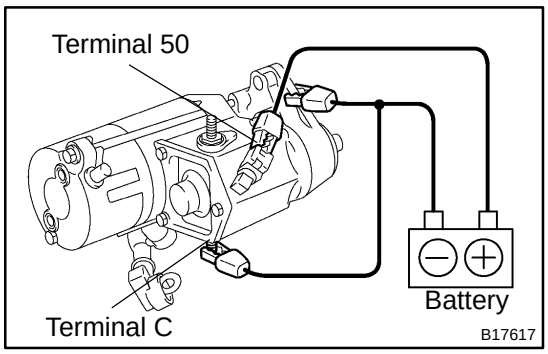

TEST

NOTICE:

These tests must be done within 3 to 5 seconds to avoid the coil to be burned − out.

1. INSPECT STARTER ASSY

(a) Do pull−in test.

(1) Disconnect the field coil lead wire from terminal C.

(2) Connect the battery to the magnetic switch as shown. Check that the clutch pinion gear protrudes.

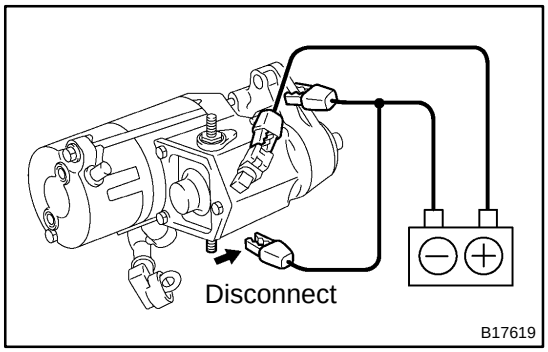

(b) Do holding test.

(1) Disconnect the negative (−) lead from the terminal C with the above condition (a) is being sustained. Check that the pinion gear remains protruded.

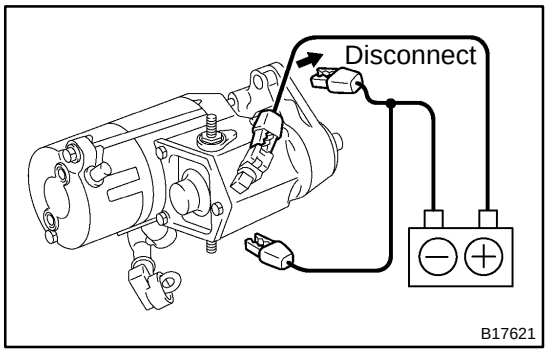

(c) Inspect clutch pinion gear return.

(1) Disconnect the negative (−) lead from the switch body. Check that the clutch pinion gear returns inward.

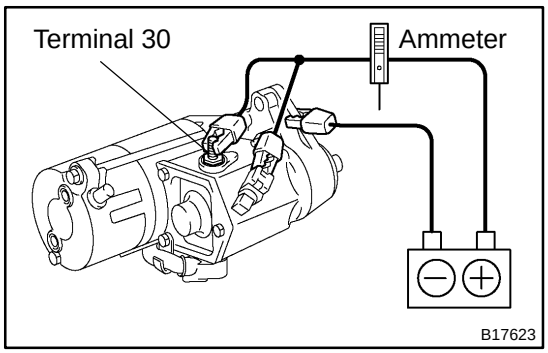

(d) Perform the operation test without load.

(1) Connect the field coil lead wire to terminal C.

Torque: 5.9 N·m (60 kgf·cm, 52 in.·lbf)

(2) Hold the starter with a vise.

(3) Connect the battery and ammeter to the starter as shown.

(4) Check that the ammeter indicates the specified current.

Specified current: 100 A or less at 11.5 V

STARTER RELAY

ST0Q0−01

INSPECTION

1. REMOVE STARTER RELAY

Remove the relay box cover and starter relay.

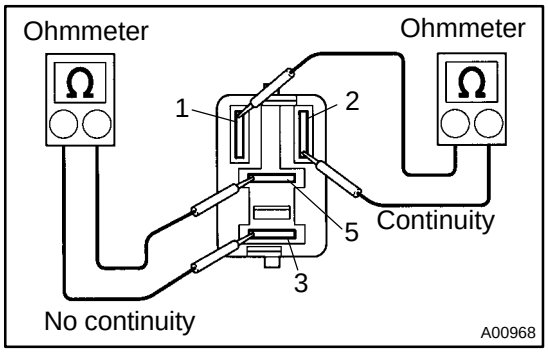

2. INSPECT STARTER RELAY CONTINUITY

(a) Using an ohmmeter, check that there is continuity between terminals 1 and 2.

If there is no continuity, replace the relay.

(b) Check that there is no continuity between terminals 3 and 5.

If there is continuity, replace the relay.

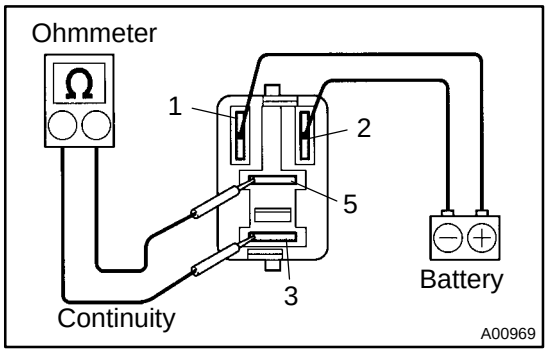

3. INSPECT STARTER RELAY OPERATION

(a) Apply battery positive voltage across terminals 1 and 2.

(b) Using an ohmmeter, check that there is continuity between terminals 3 and 5.

If there is no continuity, replace the relay.

4. REINSTALL STARTER RELAY

STARTING SYSTEM

ST0PL−01

ON−VEHICLE INSPECTION

NOTICE:

Before changing the starter, check these items again:

- **Connector connection**
- **Accessory installation, e.g.: engine immobilizer system**

ACC CUT RELAY

ST0Q1−02

INSPECTION

1. REMOVE ACC CUT RELAY

Remove the cowl side trim board LH and ACC cut relay.

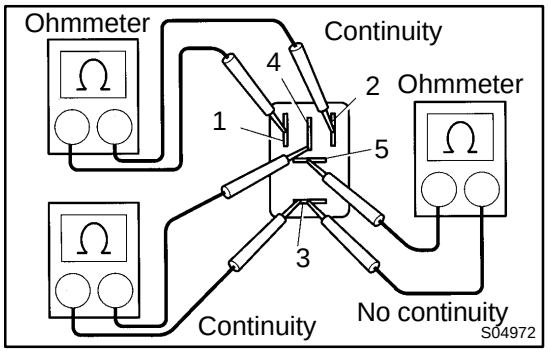

2. INSPECT ACC CUT RELAY CONTINUITY

(a) Using an ohmmeter, check that there is continuity between terminals 1 and 2.

If there is no continuity, replace the relay.

(b) Check that there is no continuity between terminals 3 and 5.

If there is continuity, replace the relay.

(c) Check that there is continuity between terminals 3 and 4.

If there is no continuity, replace the relay.

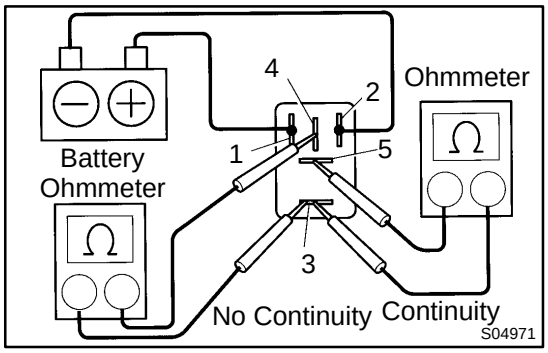

3. INSPECT ACC CUT RELAY OPERATION

(a) Apply battery positive voltage across terminals 1 and 2.

(b) Using an ohmmeter, check that there is no continuity between terminals 3 and 4.

If there is continuity, replace the relay.

(c) Using an ohmmeter, check that there is continuity between terminals 3 and 5.

If there is no continuity, replace the relay.

4. REINSTALL ACC CUT RELAY

STARTER

COMPONENTS

ST0GK−03

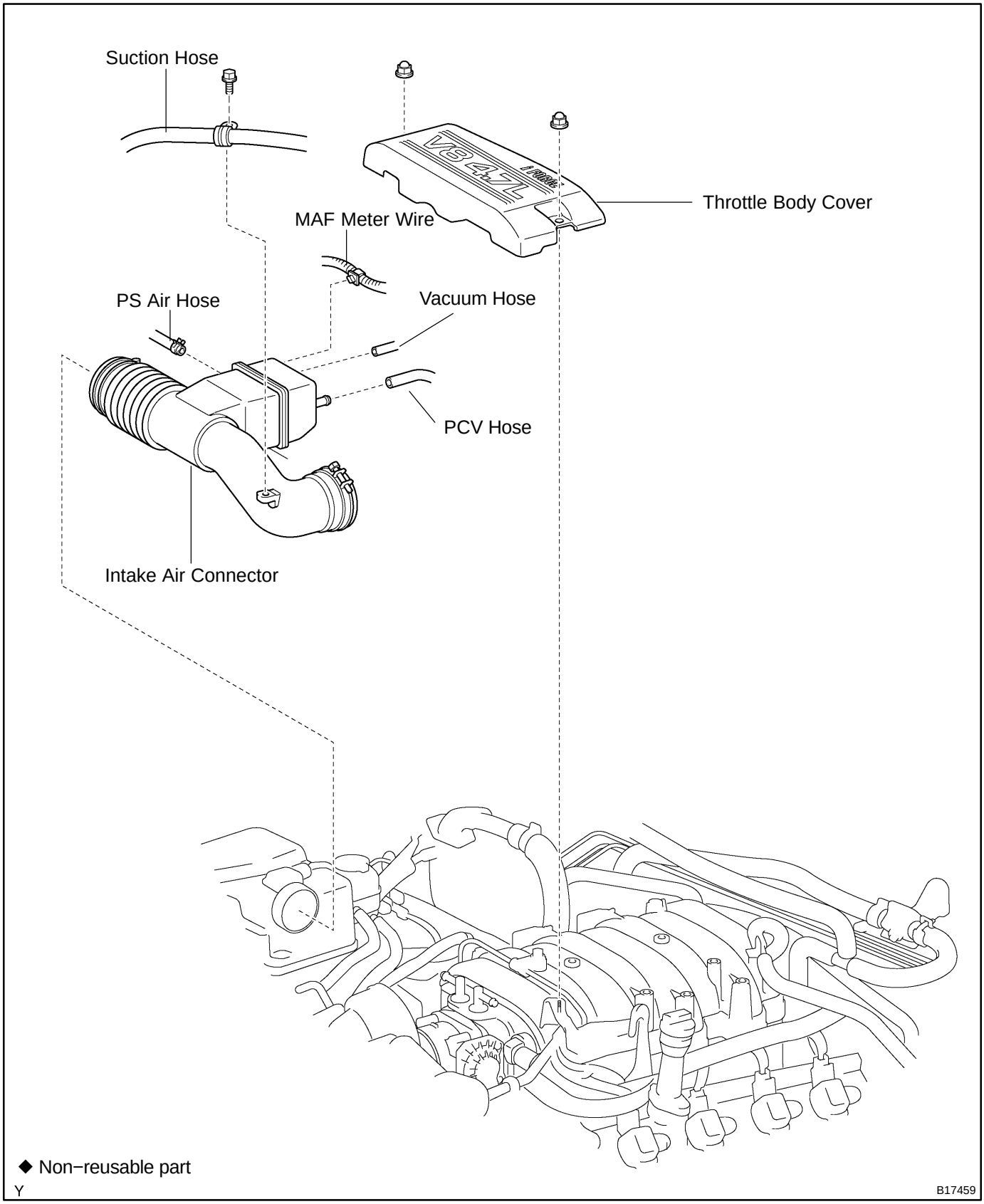

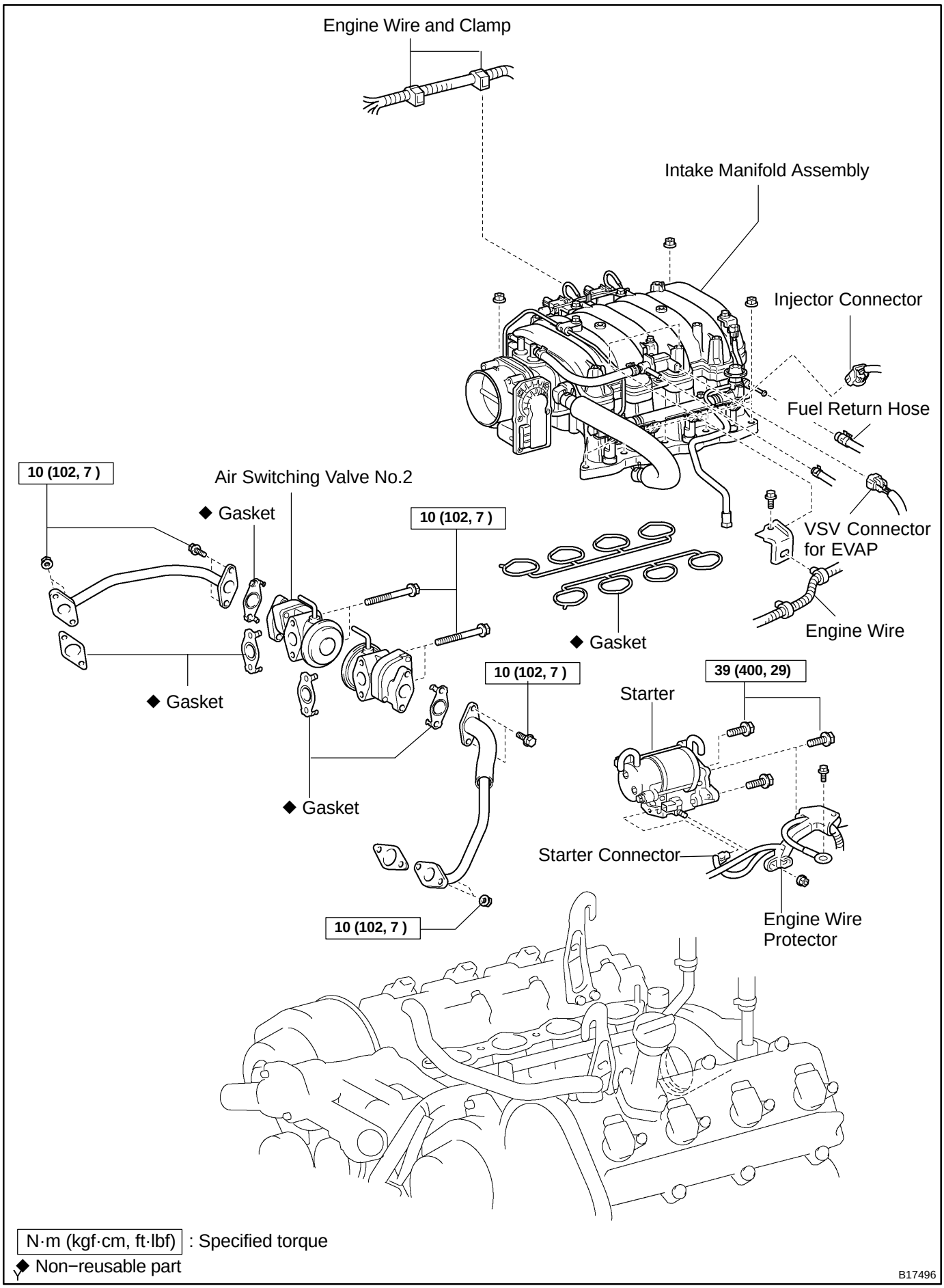

N·m (kgf·cm, ft·lbf) : Specified torque
◆ Non−reusable part

B17496

1.4 kW Type

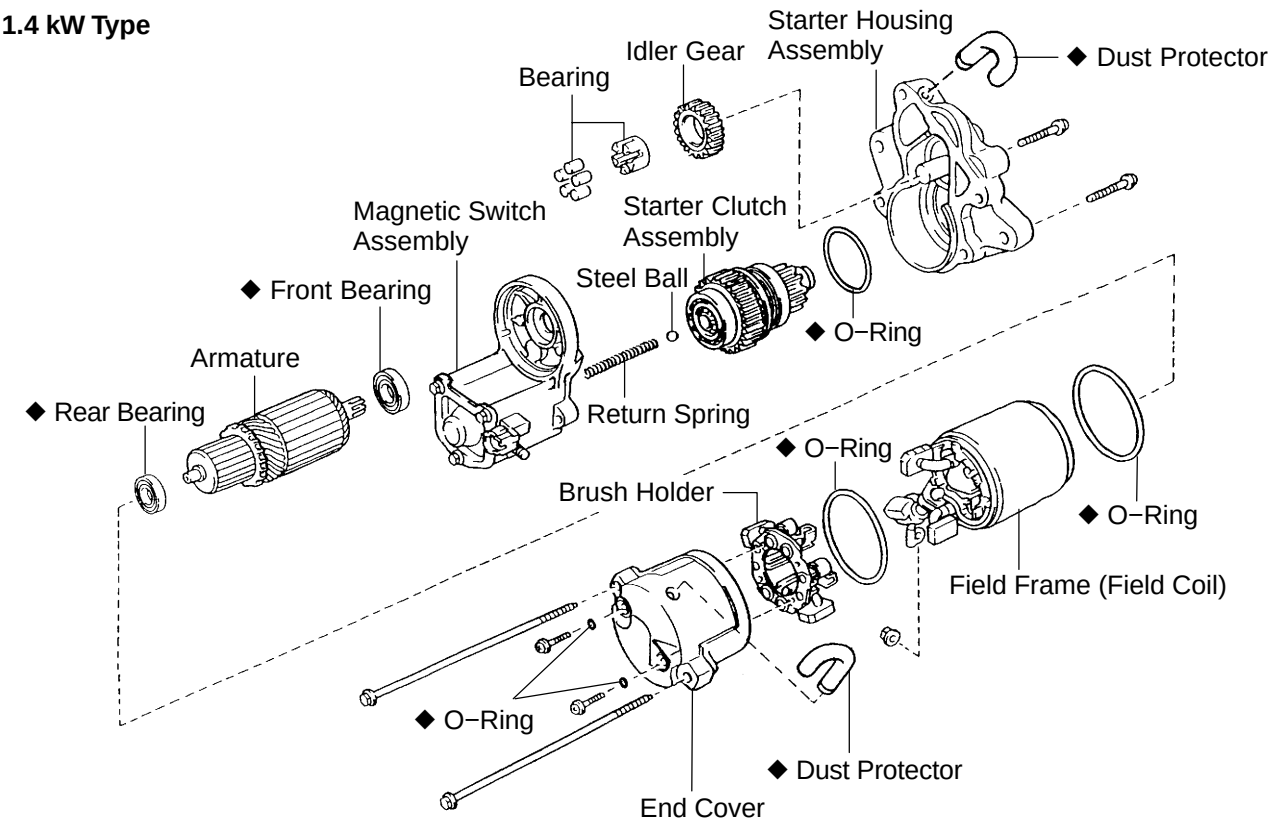

Magnetic Switch Assembly

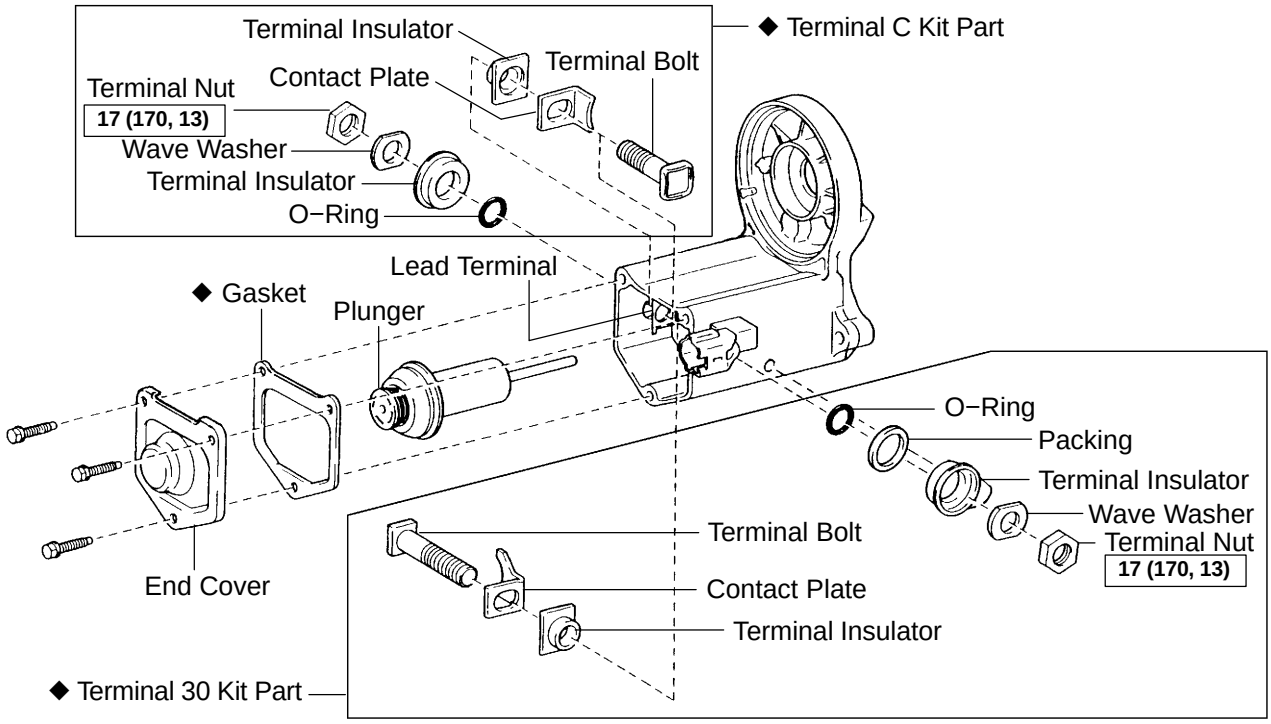

N·m (kgf·cm, ft·lbf) : Specified torque

◆ Non−reusable part

B04888

2.0 kW Type

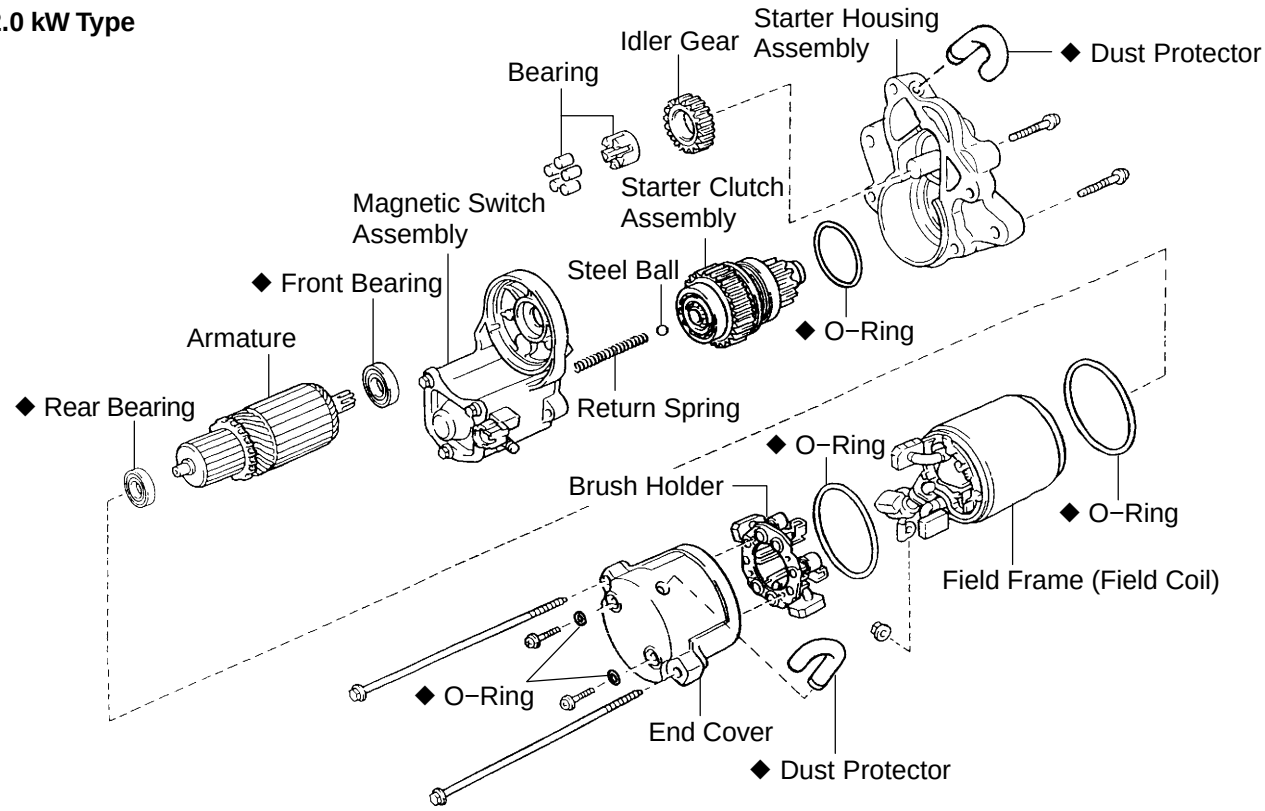

Magnetic Switch Assembly

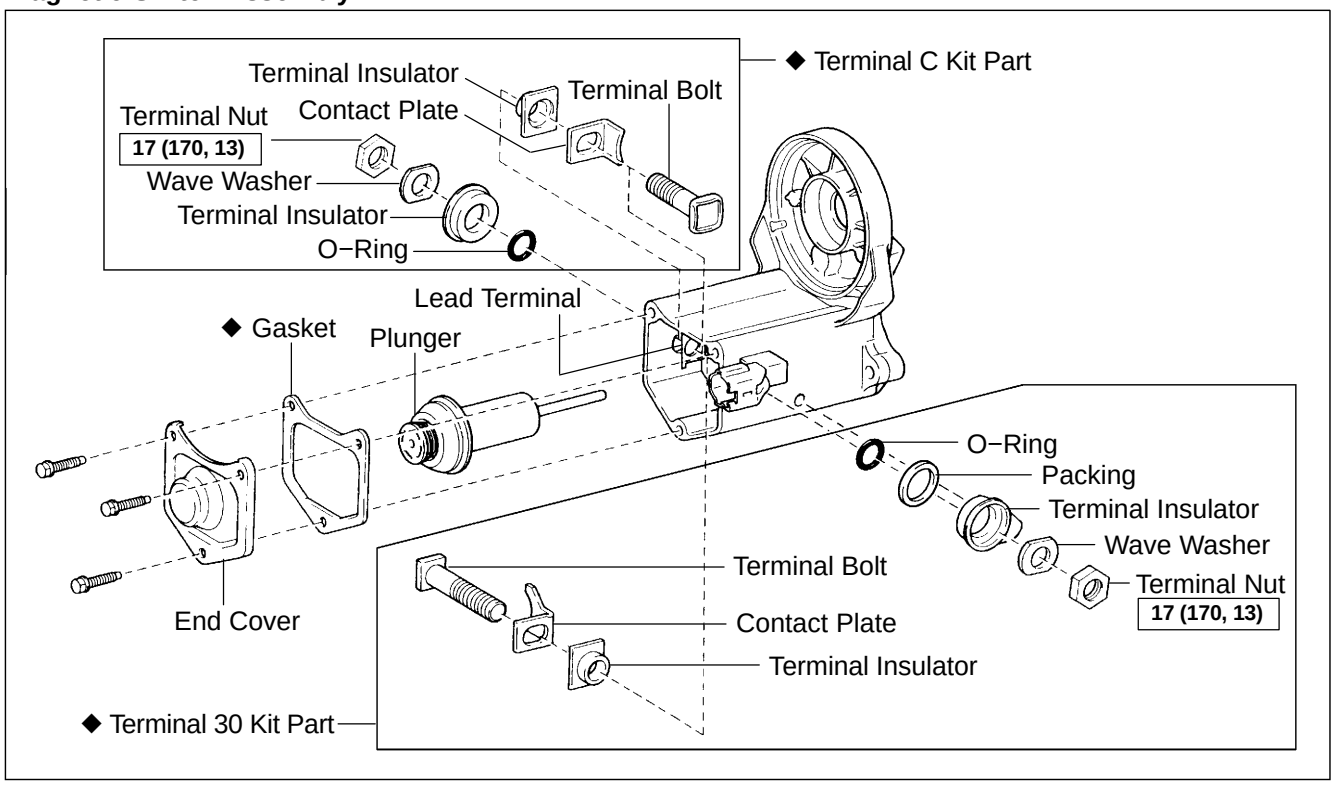

N·m (kgf·cm, ft·lbf) : Specified torque

◆ Non−reusable part

B04547

ST08D−03

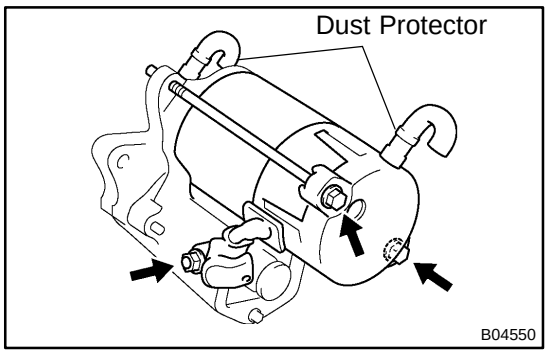

DISASSEMBLY

1. REMOVE 2 DUST PROTECTORS

2. REMOVE FIELD FRAME AND ARMATURE

(a) Remove the nut, and disconnect the lead wire from the magnetic switch terminal.
Torque: 5.9 N·m (60 kgf·cm, 52 in.·lbf)

(b) Remove the 2 through bolts.
Torque:
1.4 kW type: 5.9 N·m (60 kgf·cm, 52 in.·lbf)
2.0 kW type: 9.3 N·m (95 kgf·cm, 82 in.·lbf)

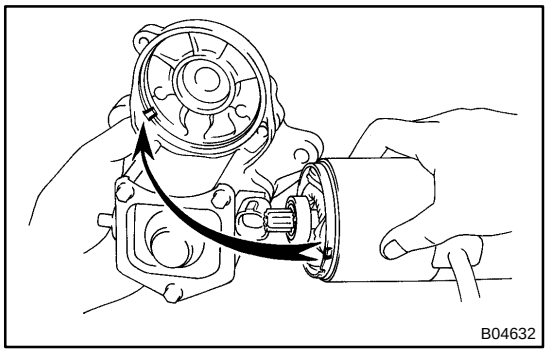

(c) Pull out the field frame together with the armature from the magnetic switch assembly.

NOTICE:
At the time of notice, please refer to the following items.
Align the protrusion of the field frame with the groove of the magnetic switch.

(d) Remove the O−ring from the field frame.

HINT:
At the time of assembly, please refer to the following items.
Use a new O−ring.

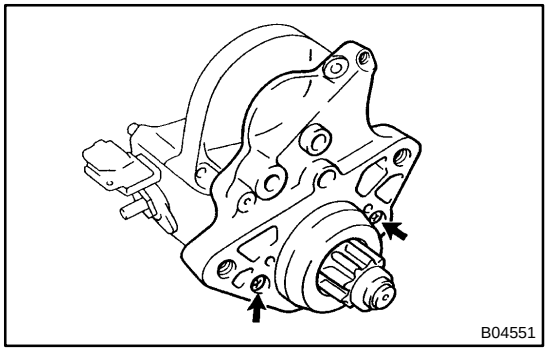

3. REMOVE STARTER HOUSING, CLUTCH ASSEMBLY AND GEAR

(a) 1.4 kW type:
Remove the 2 bolts.
Torque: 5.9 N·m (60 kgf·cm, 52 in.·lbf)

(b) 2.0 kW type:
Remove the 2 screws.
Torque: 9.3 N·m (95 kgf·cm, 82 in.·lbf)

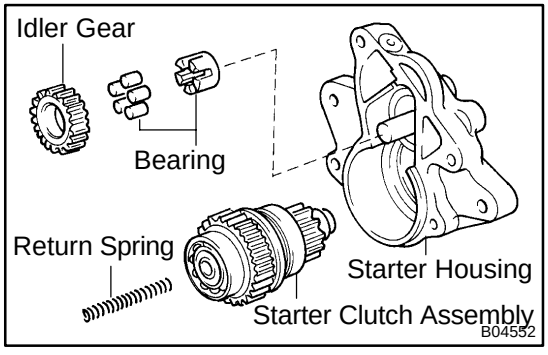

(c) Remove the starter housing, return spring, idler gear, bearing and starter clutch assembly.

HINT:
At the time of assembly, please refer to the following item.
Apply grease to the return spring and insert the return spring into the clutch shaft hole.

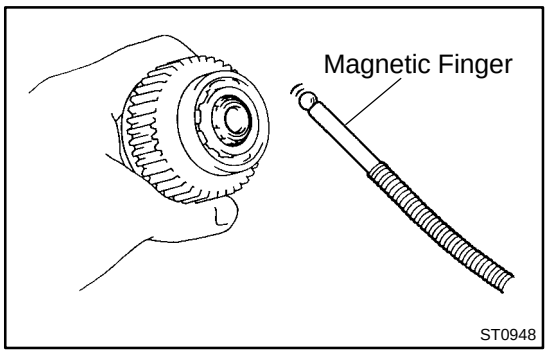

4. REMOVE STEEL BALL

Using a magnetic finger, remove the steel ball from the clutch shaft hole.

HINT:

At the time of assembly, please refer to the following item.

Apply grease to the steel ball and insert the steel ball into the clutch shaft hole.

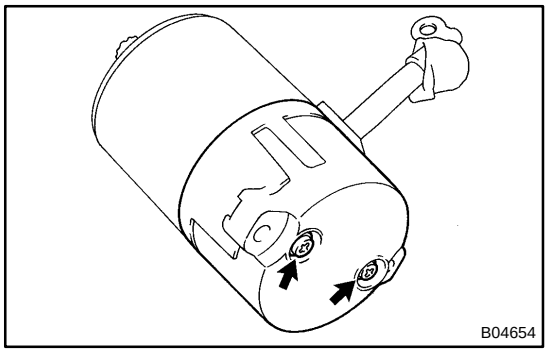

5. REMOVE BRUSH HOLDER

(a) Remove the 2 screws w/ O−ring and end cover from the field frame.

Torque:

1.4 kW type: 1.5 N·m (15 kgf·cm, 13 in.·lbf)

2.0 kW type: 3.8 N·m (39 kgf·cm, 34 in.·lbf)

(b) Remove the O−ring from the field frame.

HINT:

At the time of assembly, please refer to the following item.

Use a new O−ring.

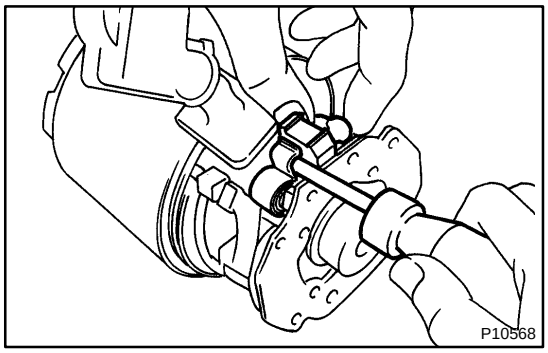

(c) Using a screwdriver, hold the spring back and disconnect the brush from the brush holder. Disconnect the 4 brushes, and remove the brush holder.

NOTICE:

Check that the positive (+) lead wires are not grounded.

6. REMOVE ARMATURE FROM FIELD FRAME

ST0GL−03

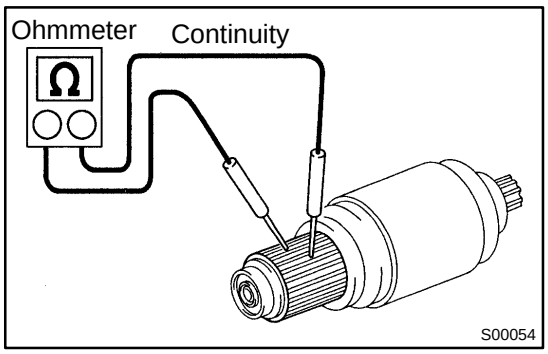

INSPECTION

1. INSPECT COMMUTATOR FOR OPEN CIRCUIT

Using an ohmmeter, check that there is continuity between the segments of the commutator.

If there is no continuity between any segment, replace the armature.

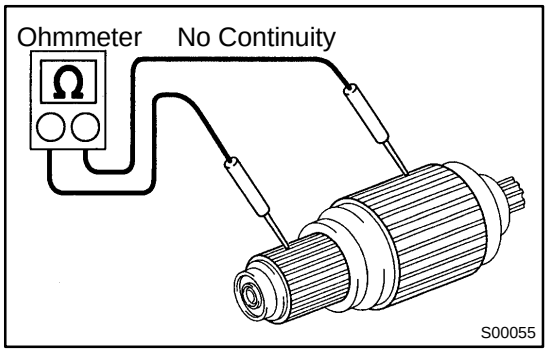

2. INSPECT COMMUTATOR FOR GROUND

Using an ohmmeter, check that there is no continuity between the commutator and armature coil core.

If there is continuity, replace the armature.

3. INSPECT COMMUTATOR FOR DIRTY AND BURNT SURFACE

If the surface is dirty or burnt, correct it with sandpaper (No.400) or on a lathe.

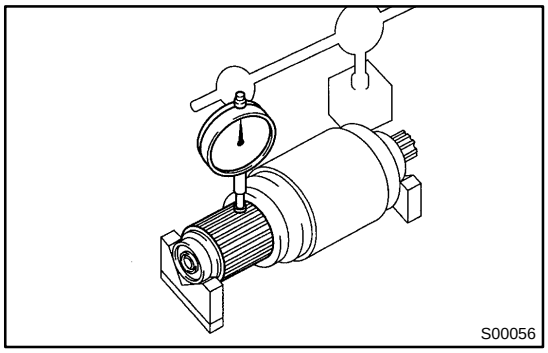

4. INSPECT COMMUTATOR CIRCLE RUNOUT

(a) Place the commutator on V−blocks.

(b) Using a dial indicator the circle runout.

Maximum circle runout: 0.05 mm (0.0020 in.)

If the circle runout is greater than maximum, correct it on a lathe.

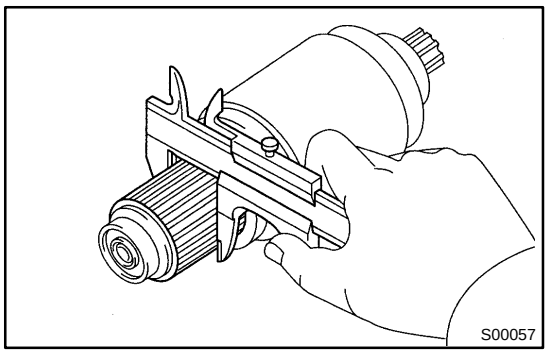

5. INSPECT COMMUTATOR DIAMETER

Using vernier calipers, measure the commutator diameter.

Standard diameter:

1.4 kW type	30.0 mm (1.181 in.)
2.0 kW type	35.0 mm (1.378 in.)

Minimum diameter:

1.4 kW type	29.0 mm (1.142 in.)
2.0 kW type	34.0 mm (1.339 in.)

If the diameter is less than minimum, replace the armature.

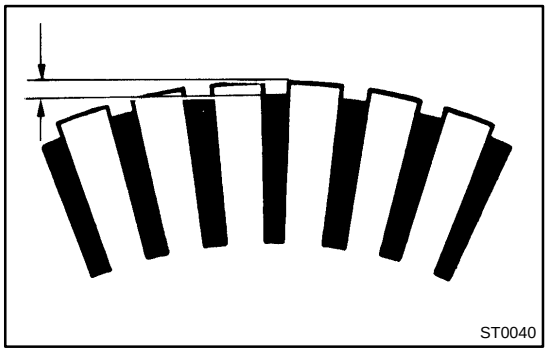

6. INSPECT UNDERCUT DEPTH

Check that the undercut depth is clean and free of foreign materials. Smooth out the edge.

Standard undercut depth:

1.4 kW type	0.6 mm (0.024 in.)
2.0 kW type	0.7 mm (0.028 in.)

Minimum undercut depth: 0.2 mm (0.008 in.)

If the undercut depth is less than minimum, correct it with a hacksaw blade.

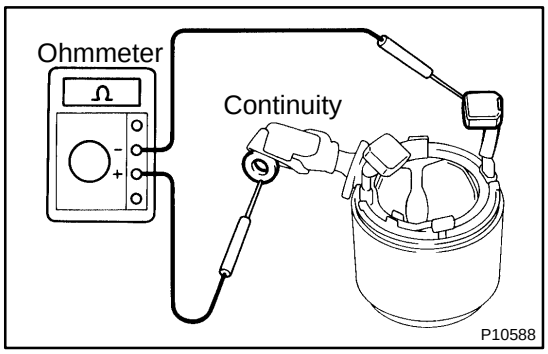

7. INSPECT FIELD COIL FOR OPEN CIRCUIT

Using an ohmmeter, check that there is continuity between the lead wire and field coil brush lead.

If there is no continuity, replace the field frame.

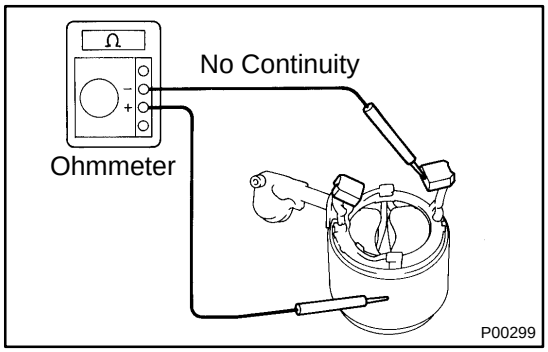

8. INSPECT THAT FIELD COIL IS NOT GROUNDED

Using an ohmmeter, check that there is no continuity between the field coil end and field frame.

If there is continuity, repair or replace the field frame.

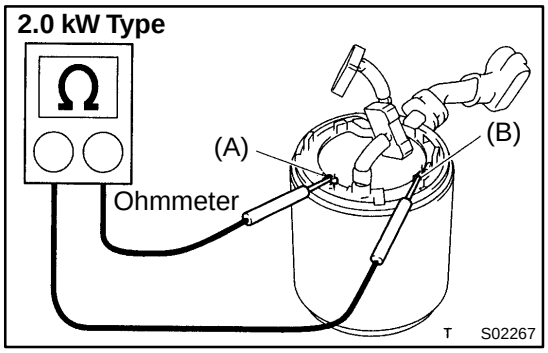

9. 2.0 kW type:
INSPECT SHUNT COIL FOR OPEN CIRCUIT

Using an ohmmeter, measure the resistance between shunt coil terminals (A) and (B).

Resistance: 1.5 to 1.9 Ω at 20˚C (68˚F)

If the resistance is not as specified, replace the field frame.

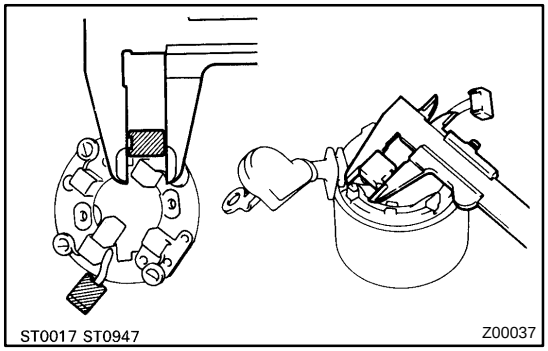

10. INSPECT BRUSH LENGTH

Using vernier calipers, measure the brush length.

Standard length:

1.4 kW type	15.5 mm (0.610 in.)
2.0 kW type	15.0 mm (0.591 in.)

Minimum length:

1.4 kW type	10.0 mm (0.394 in.)
2.0 kW type	9.0 mm (0.354 in.)

If the length is less than minimum, replace the brush holder and field frame.

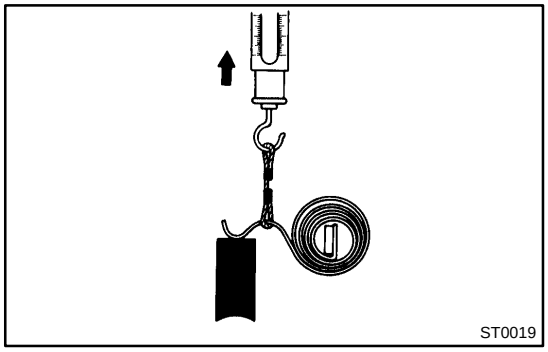

11. INSPECT BRUSH SPRING LOAD

Take the pull scale reading the instant the brush spring separates from the brush.

Standard spring installed load:

1.4 kW type	17.6 to 23.5 N (1.8 to 2.4 kgf, 4.0 to 5.3 lbf)
2.0 kW type	21.5 to 27.5 N (2.2 to 2.8 kgf, 4.8 to 6.2 lbf)

Minimum spring installed load:

1.4 kW type	11.8 N (1.2 kgf, 2.7 lbf)
2.0 kW type	12.7 N (1.3 kgf, 2.9 lbf)

If the installed load is less than minimum, replace the brush springs.

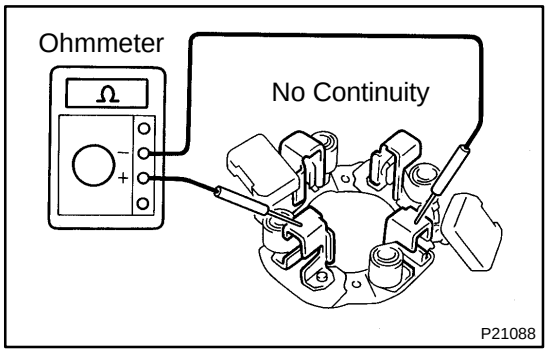

12. INSPECT BRUSH HOLDER INSULATION

Using an ohmmeter, check that there is no continuity between the positive (+) and negative (−) brush holders.

If there is continuity, repair or replace the brush holder.

13. INSPECT GEAR TEETH

Check the gear teeth on the pinion gear, idle gear and the clutch assembly for wear or damage.

If damaged, replace the gear or clutch assembly.

If damaged, also check the drive plate ring gear for wear or damage.

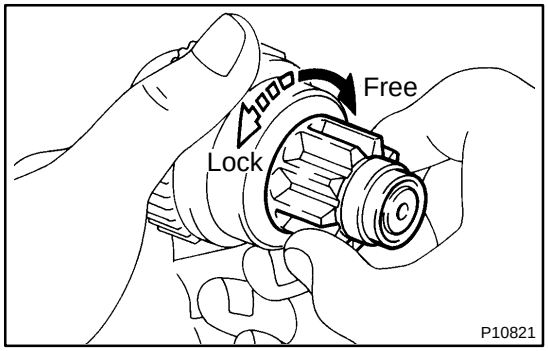

14. INSPECT CLUTCH PINION GEAR

Rotate the pinion gear clockwise, and check that it turns freely.

Try to rotate the pinion gear counterclockwise and check that it locks.

If necessary, replace the clutch assembly.

15. INSPECT FRONT AND REAR BEARING

Turn the bearing by hand while applying inward force.

If resistance is felt or the bearing sticks, replace the bearing.

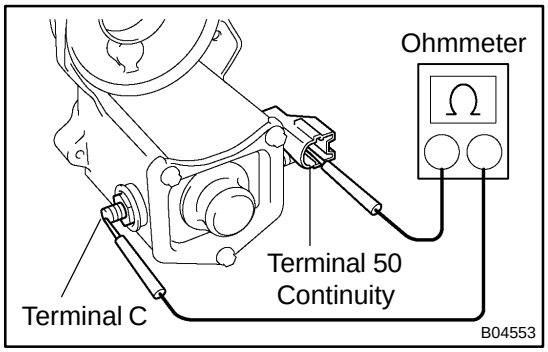

16. DO PULL−IN COIL OPEN CIRCUIT TEST

Using an ohmmeter, check that there is continuity between terminals 50 and C.

If there is no continuity, check and replace the magnetic switch.

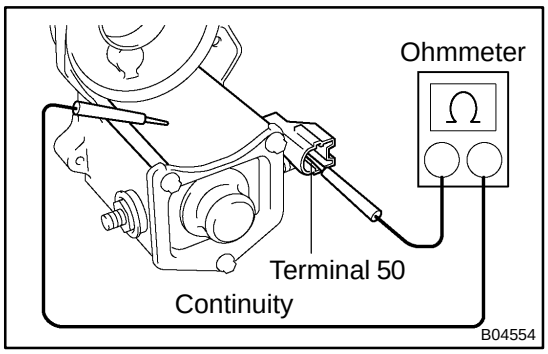

17. DO HOLD−IN COIL OPEN CIRCUIT TEST

Using an ohmmeter, check that there is continuity between terminal 50 and the switch body.

If there is no continuity, replace the magnetic switch.

ST08I−05

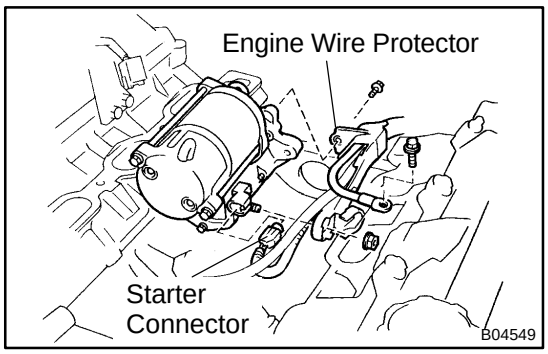

INSTALLATION

1. INSTALL STARTER

(a) Install the engine wire protector to the starter with the bolt.
Torque: 9.81 N·m (100 kgf·cm, 84 in.·lbf)

(b) Connect the starter wire with the nut.
Torque: 9.81 N·m (100 kgf·cm, 84 in.·lbf)

(c) Connect the starter connector.

(d) Connect the starter to the cylinder block.

(e) Connect the engine wire with the bolt.

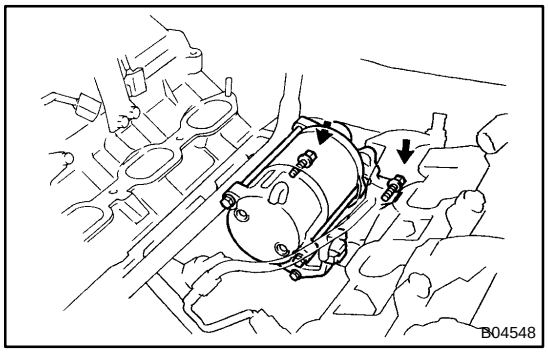

(f) Install the starter with the 2 bolts.
Torque: 39 N·m (400 kgf·cm, 29 ft·lbf)

2. INSTALL AIR PUMP ASSEMBLY (See page EC−27)

3. INSTALL INTAKE MANIFOLD ASSEMBLY (See page EM−60)

4. CONNECT THROTTLE BODY ASSEMBLY TO INTAKE MANIFOLD (See page SF−45)

5. INSTALL INTAKE AIR CONNECTOR

6. INSTALL THROTTLE BODY COVER

7. CONNECT CABLE TO NEGATIVE (−) BATTERY TERMINAL

ST08G−05

REASSEMBLY

Reassembly is in the reverse order of disassembly (See page ST−7).

HINT:

At the time of assembly, use high−temperature grease to lubricate the bearing and gears when assembling the starter.

ST08C−05

REMOVAL

1. **REMOVE THROTTLE BODY COVER**
2. **DISCONNECT CABLE FROM NEGATIVE (−) BATTERY TERMINAL**
3. **REMOVE INTAKE AIR CONNECTOR**
4. **DISCONNECT THROTTLE BODY ASSEMBLY FROM INTAKE MANIFOLD (See pege SF−44)**
5. **REMOVE INTAKE MANIFOLD ASSEMBLY (See page EM−36)**
6. **REMOVE AIR PUMP ASSEMBLY (See page EC−23)**

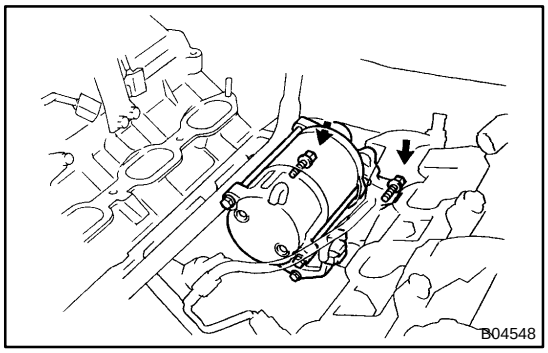

7. REMOVE STARTER

(a) Remove the 2 bolts holding the starter to the cylinder block.

(b) Disconnect the starter from the cylinder block.

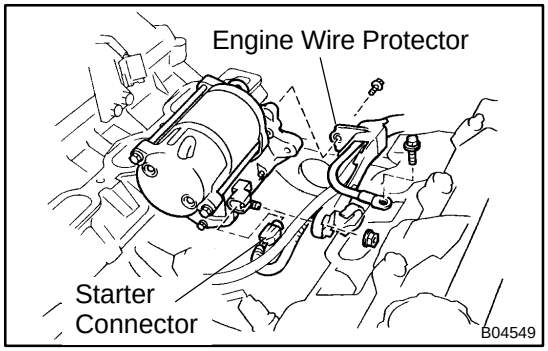

(c) Disconnect the starter connector.

(d) Remove the nut, bolt and disconnect the starter wire.

(e) Remove the bolt, and disconnect the engine wire protector from the starter.

(f) Remove the starter.

ST08F−06

REPLACEMENT

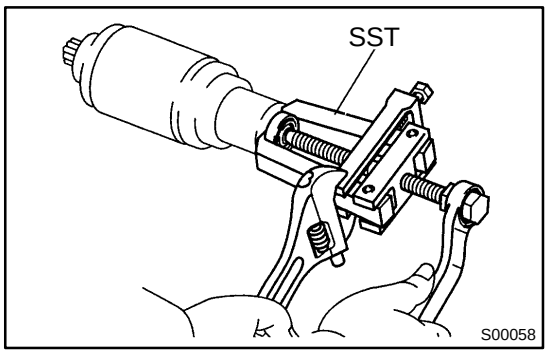

1. REPLACE REAR BEARING

(a) Using SST, remove the bearing.
SST 09286−46011

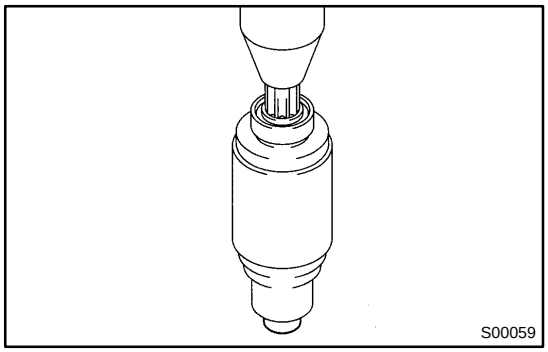

(b) Using a press, press in a new bearing.

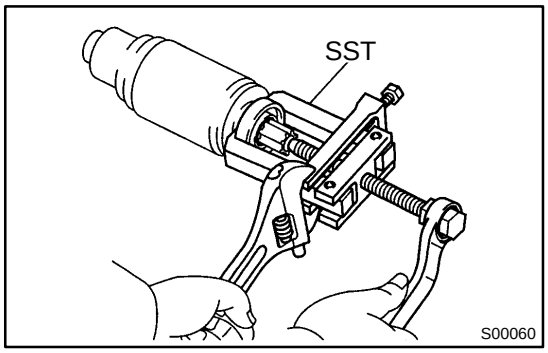

2. REPLACE FRONT BEARING

(a) Using SST, remove the bearing.
SST 09286−46011

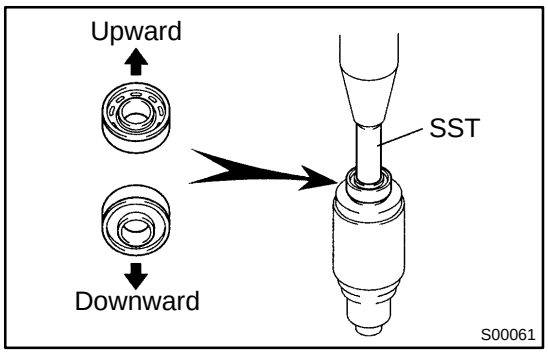

(b) Using SST and a press, press in a new bearing.

NOTICE:

Be careful of the bearing installation direction.

SST 09820−00031

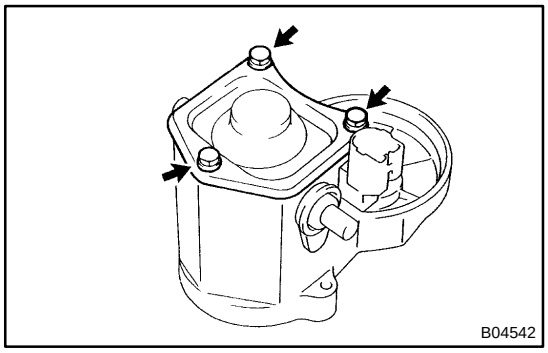

3. REPLACE MAGNETIC SWITCH TERMINAL KIT PARTS

(a) Remove magnetic switch end cover.
Remove the 3 bolts, end cover, gasket and plunger.

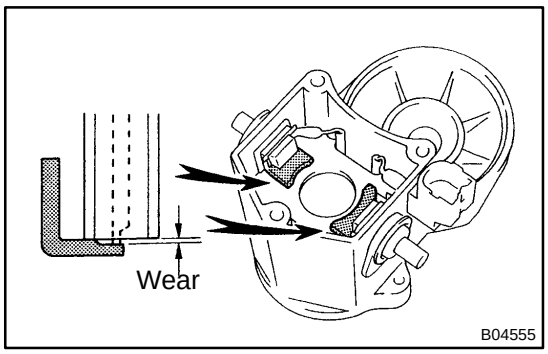

(b) Inspect contact plate for wear.
Using vernier calipers, measure the contact plate for depth of wear.
Maximum wear: 0.9 mm (0.035 in.)

If the depth of wear is greater than the maximum, replace the contact plate.

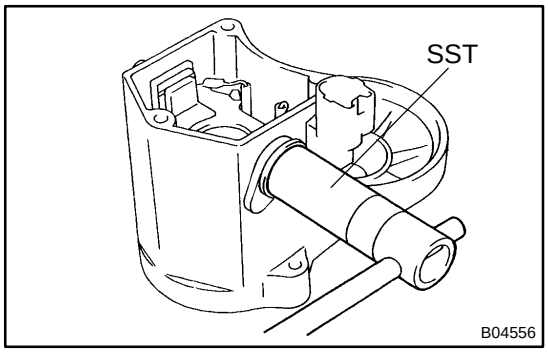

(c) Remove terminal kit parts.
(1) Using SST, loosen the terminal nuts.
SST 09810−38140
(2) Terminal C:
Remove the terminal nut, wave washer, terminal insulator (outside), O−ring, terminal bolt, contact plate and terminal insulator (inside).
(3) Terminal 30:
Remove the terminal nut, wave washer, terminal insulator (outside), O−ring, terminal bolt, contact plate, terminal insulator (inside) and insulation paper.

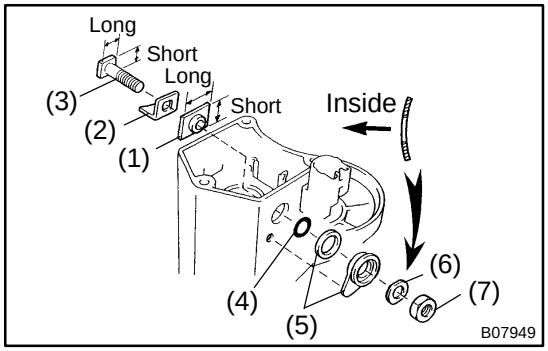

(d) Install new terminal 30 kit parts.
(1) Temporarily install a new terminal insulator (inside).
(2) Temporarily install a new contact plate.
(3) Temporarily install a new terminal bolt.
(4) Temporarily install a new O−ring.
(5) Temporarily install a new packing and new terminal insulator (outside).
Install a new packing to a new terminal insulator, and install them.

HINT:
Match the protrusion of the insulator with the indentation of the housing.

(6) Temporarily install a new wave washer.
(7) Temporarily install a new terminal nut.

NOTICE:
Be careful to install the terminal insulator (inside) and wave washer in the correct direction.

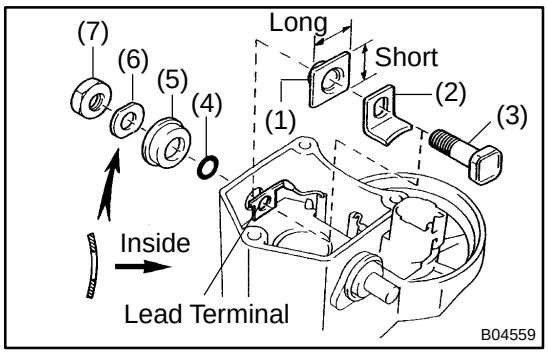

(e) Install new terminal C kit parts.
(1) Temporarily install a new terminal insulator (inside).
(2) Temporarily install a new contact plate.
(3) Temporarily install a new terminal bolt.
(4) Temporarily install a new O−ring.
(5) Temporarily install a new terminal insulator (outside).
(6) Temporarily install a new wave washer.
(7) Temporarily install a new terminal nut.

NOTICE:

Be careful to install the terminal insulator (inside) and wave washer in the correct direction.

(f) Temporarily tighten the terminal nuts.

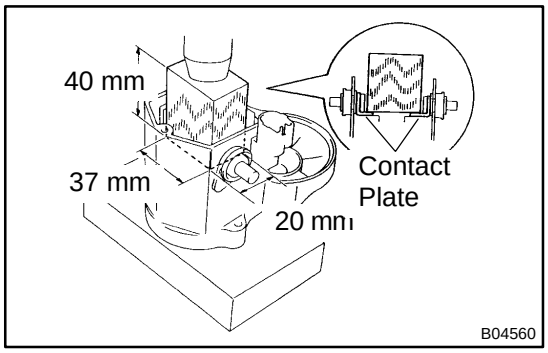

(g) Tighten terminal nuts.
(1) Put a wooden block on the contact plate and press it down with a hand press.

Dimensions of wooden block:
20 x 37 x 40 mm (0.79 x 1.46 x 1.57 in.)
Press force:
981 N (100 kgf, 221 lbf)

NOTICE:

- **Check the diameter of the hand press ram. Then calculate the gauge pressure of the press when 981 N (100 kgf, 221 lbf) of force is applied.**
  Gauge pressure:

$$(\text{kgf/cm}^2) = \frac{100\ \text{kgf}}{\left(\frac{\text{Ram diameter (cm)}}{2}\right)^2 \times 3.14\ (\pi)}$$

$$(\text{psi}) = \frac{221\text{lbf}}{\left(\frac{\text{Ram diameter (in.)}}{2}\right)^2 \times 3.14\ (\pi)}$$

$$(\text{kPa}) = (\text{kgf/cm}^2) \times 98.1$$

$$(\text{kPa}) = (\text{psi}) \times 6.9$$

- **If the contact plate is not pressed down with the specified pressure, the contact plate may tilt due to coil deformation or the tightening of the nut.**

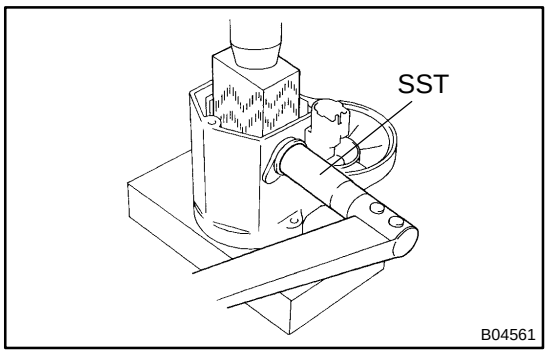

(2) Using SST, tighten the nuts to the specified torque.
SST 09810−38140
Torque: 17 N·m (170 kgf·cm, 13 ft·lbf)

NOTICE:
If the nut is over tightened, it may cause cracks on the inside of the insulator.

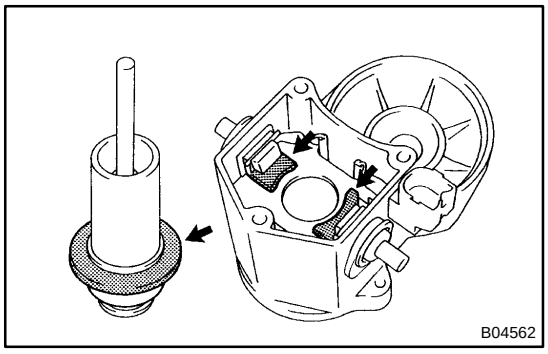

(h) Clean contact surfaces of contact plate and plunger.
Clean the contact surfaces of the remaining contact plate and plunger with a dry shop rag.

(i) Reinstall magnetic switch end cover.
Install the plunger, new gasket, end cover and lead clamp with the 3 bolts.
Torque:
1.4 kW type: 2.5 N·m (25 kgf·cm, 22 in.·lbf)
2.0 kW type: 3.6 N·m (37 kgf·cm, 32 in.·lbf)

ST08H−06

TEST

NOTICE:

These tests must be done within 3 to 5 seconds to avoid burning out the coil.

1. DO PULL−IN TEST

(a) Disconnect the field coil lead wire from terminal C.

(b) Connect the battery to the magnetic switch as shown. Check that the pinion gear moves outward.

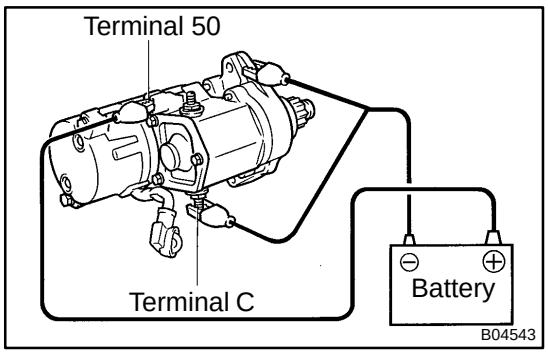

2. DO HOLD−IN TEST

While connected as above with the pinion gear out, disconnect the negative (−) lead from terminal C. Check that the pinion gear remains out.

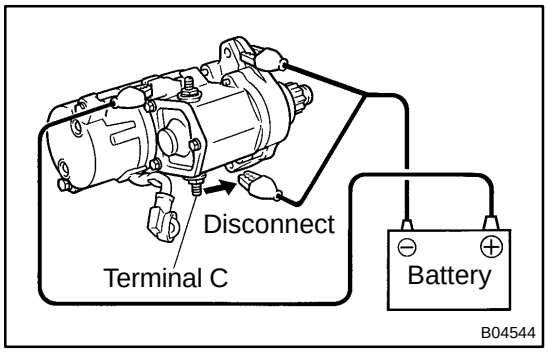

3. INSPECT CLUTCH PINION GEAR RETURN

Disconnect the negative (−) lead from the starter body. Check that the pinion gear returns inward.

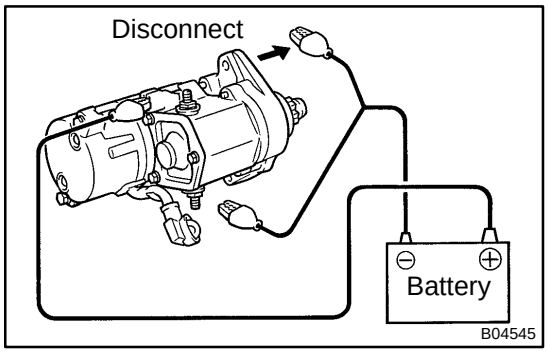

4. DO NO−LOAD PERFORMANCE TEST

(a) Connect the battery and ammeter to the starter as shown.

(b) Check that the starter rotates smoothly and steadily with the pinion gear moving out. Check that the ammeter shows the specified current.

Specified current:

1.4 kW type	90 A or less at 11.5 V
2.0 kW type	100 A or less at 11.5 V

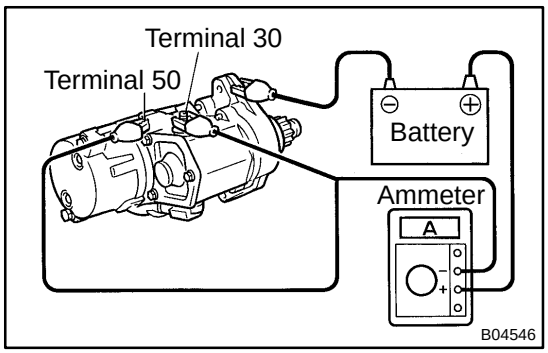

STARTER RELAY

ST0PK−01

INSPECTION

1. REMOVE RELAY BOX COVER

2. REMOVE STARTER RELAY (Marking: ST)

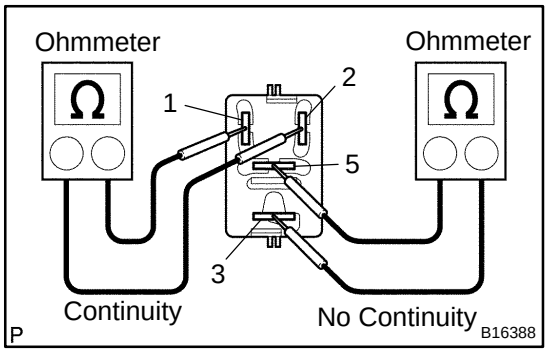

3. INSPECT STARTER RELAY

(a) Inspect the relay continuity.

(1) Using an ohmmeter, check that there is continuity between terminals 1 and 2.

If there is no continuity, replace the relay.

(2) Check that there is no continuity between terminals 3 and 5.

If there is continuity, replace the relay.

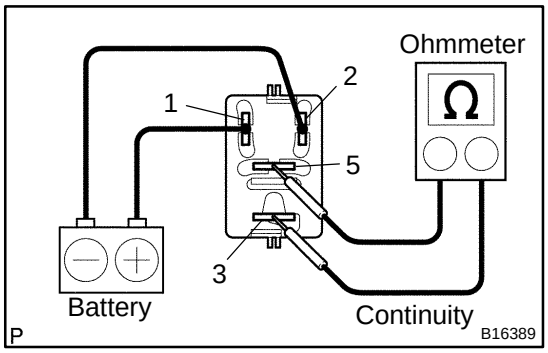

(b) Inspect the relay operation.

(1) Apply battery voltage across terminals 1 and 2.

(2) Using an ohmmeter, check that there is continuity between terminals 3 and 5.

If there is no continuity, replace the relay.

4. REINSTALL RELAY BOX COVER

5. REINSTALL STARTER RELAY

STARTING SYSTEM

ST08A−04

ON−VEHICLE INSPECTION

NOTICE:

Before changing the starter, check these items again:

- **Connector connection**
- **Accessory installation, e.g.: engine immobilizer system**

DRIVEN SPROCKET

COMPONENTS

TR00F−09

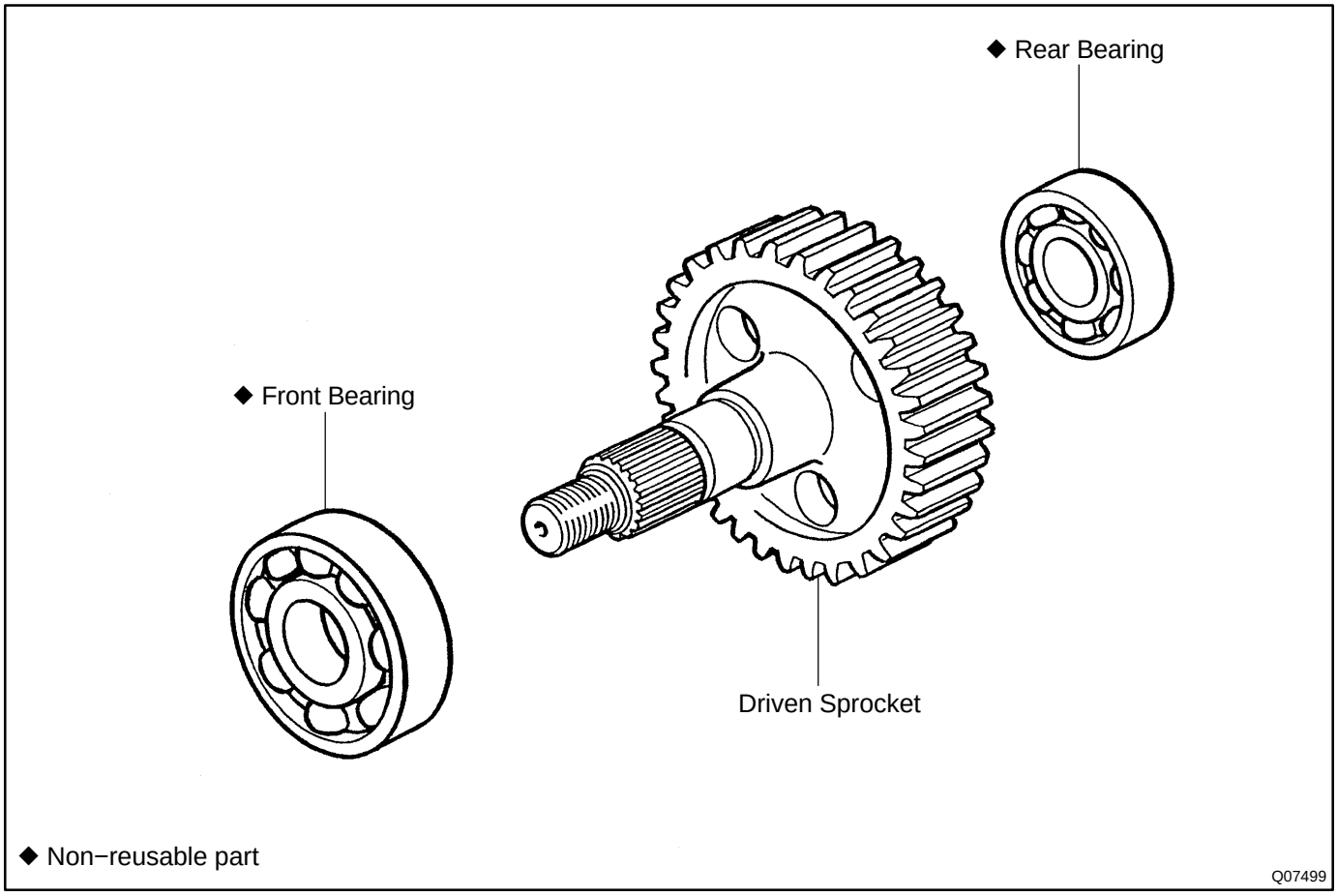

TR00G−09

REPLACEMENT

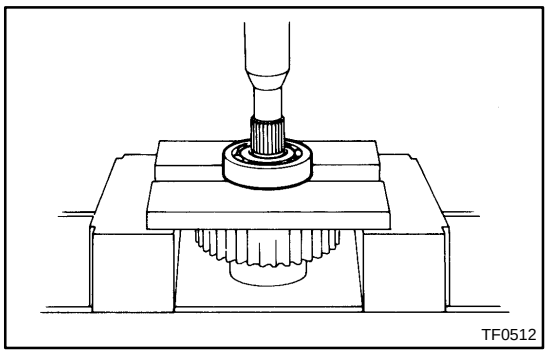

1. REMOVE FRONT BEARING

Using a press, remove the front bearing.

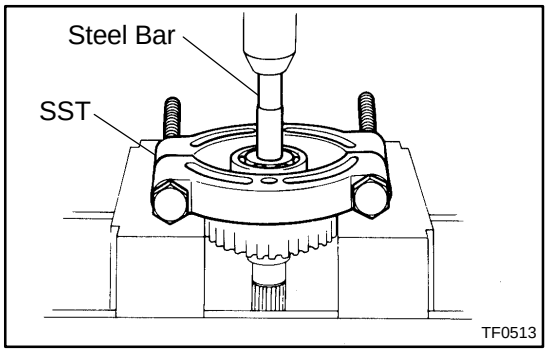

2. REMOVE REAR BEARING

Using SST, a press and steel bar, remove the rear bearing.

SST 09555−55010

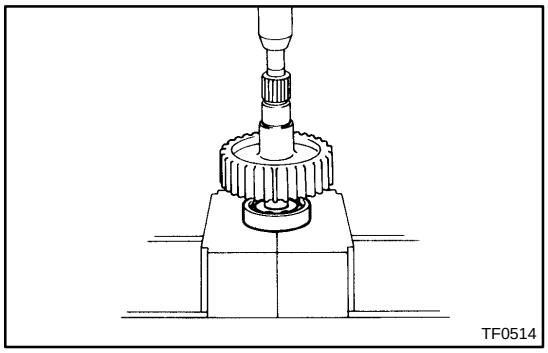

3. INSTALL REAR BEARING

Using a press, install a new rear bearing.

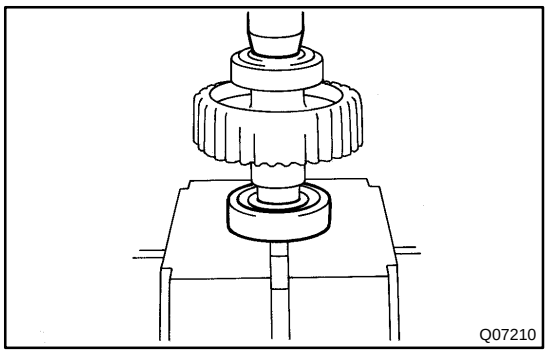

4. INSTALL FRONT BEARING

Using a press, install a new front bearing.

INPUT SHAFT

COMPONENTS

TR00L−07

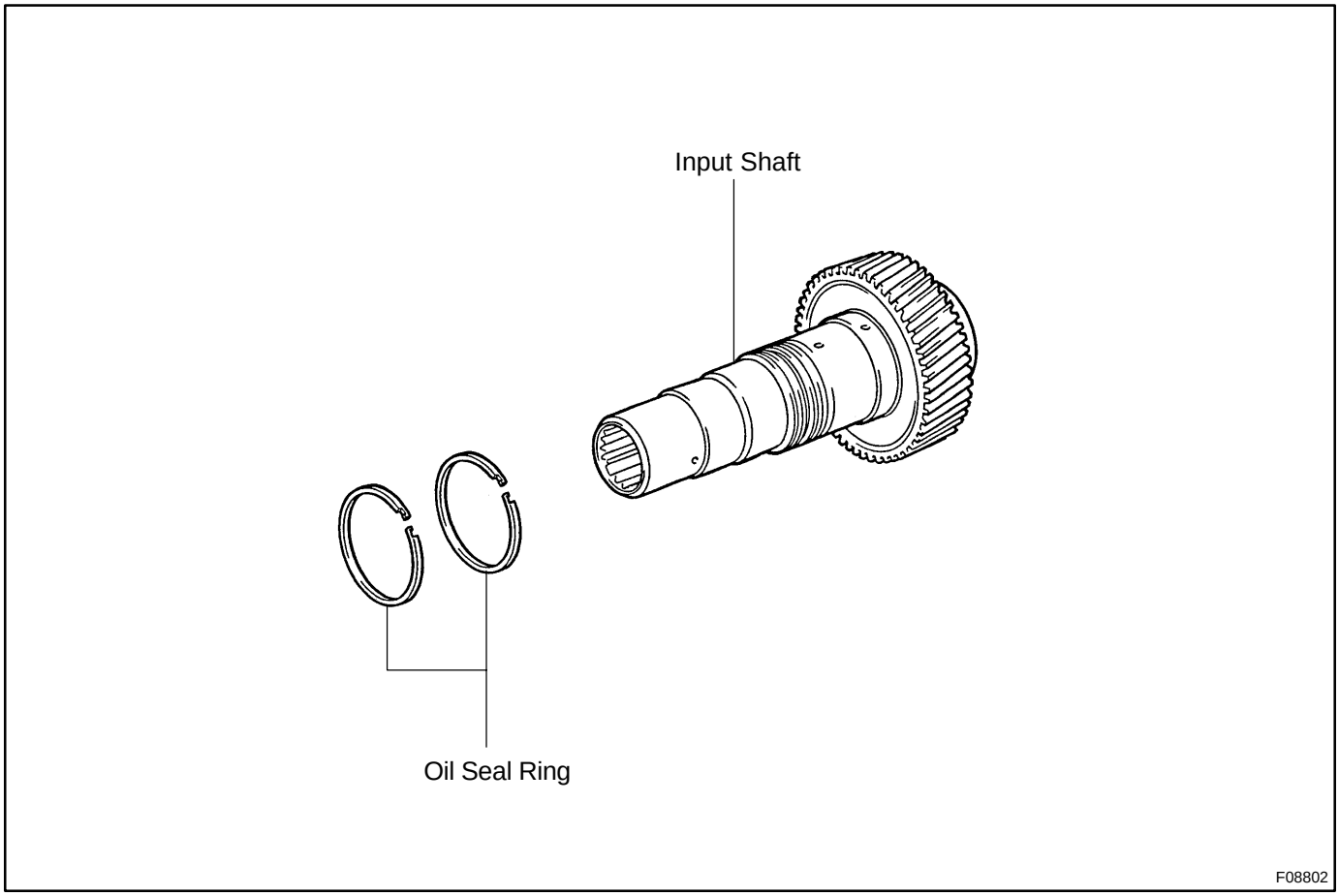

TR09Q−02

INSPECTION

1. REMOVE OIL SEAL RING

Remove the 2 oil seal rings.

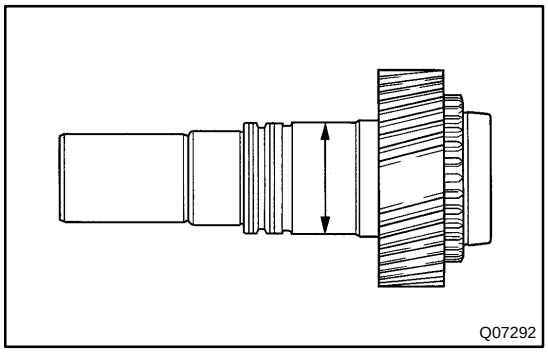

2. INSPECT INPUT SHAFT

(a) Using a micrometer, measure the outer diameter of the input shaft journal surface.

Minimum diameter: 47.59 mm (1.8736 in.)

If the outer diameter is less than the minimum, replace the input shaft.

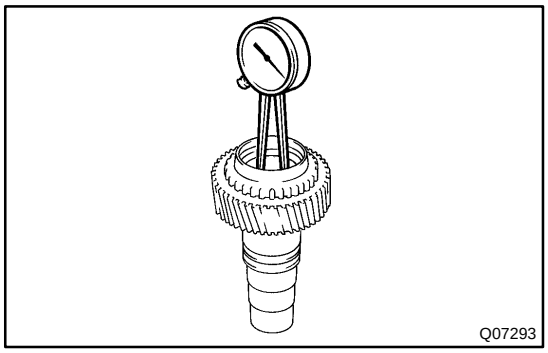

(b) Using a dial indicator, measure the inside diameter of the input shaft bushing.

Maximum inside diameter: 39.14 mm (1.5409 in.)

If the inside diameter exceeds the maximum, replace the input shaft.

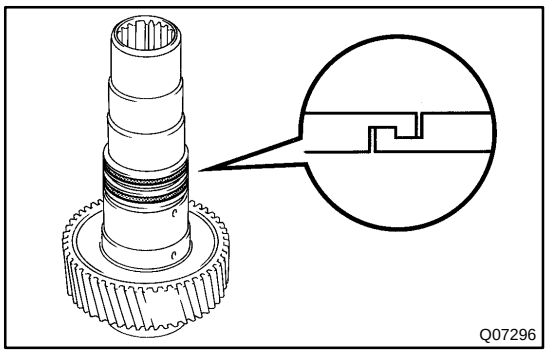

3. INSTALL OIL SEAL RING

Install the 2 oil seal rings.

HINT:

- Apply gear oil to the oil seal ring.
- Engage securely to eliminate clearance as shown in the illustration.

OIL SEAL

COMPONENTS

TR00P−10

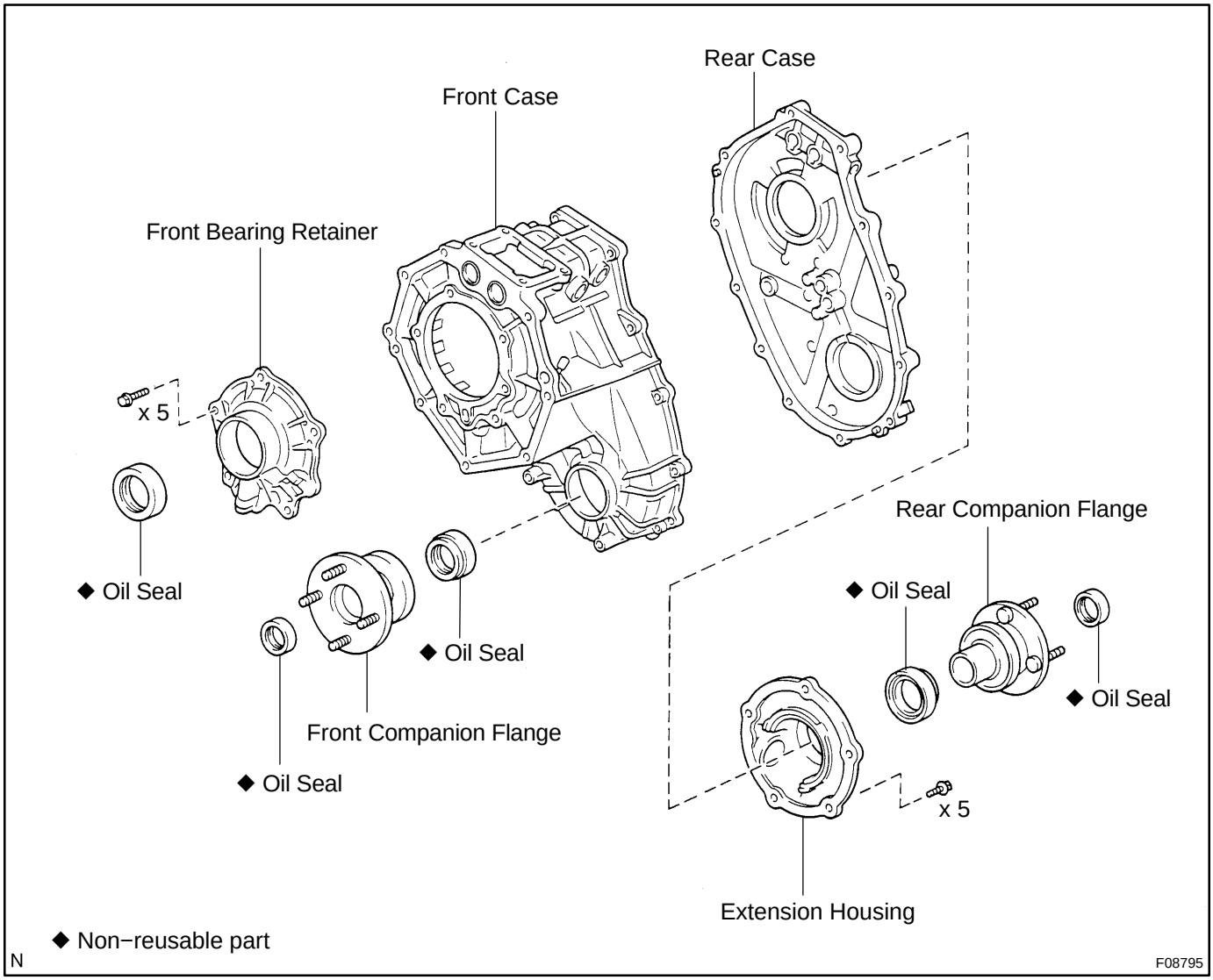

TR09R−02

REPLACEMENT

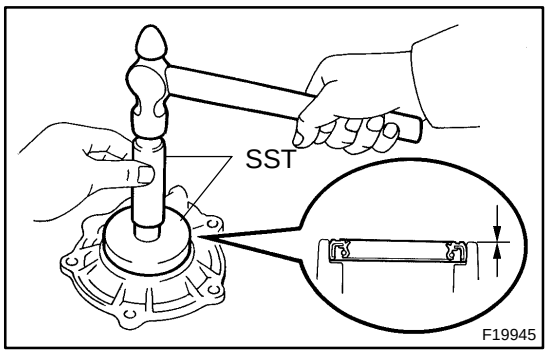

1. IF NECESSARY, REPLACE FRONT BEARING RETAINER OIL SEAL

(a) Using a screwdriver and hammer, drive out the oil seal.

(b) Using SST and a hammer, drive in a new oil seal until its surface is flush with the retainer upper surface.
SST 09950−60010 (09951−00590), 09950−70010 (09951−07100)

(c) Coat the lip of the oil seal with MP grease.

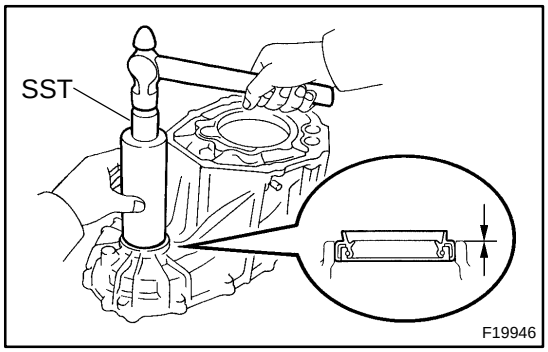

2. IF NECESSARY, REPLACE FRONT CASE OIL SEAL

(a) Using a screwdriver and hammer, drive out the oil seal.

(b) Using SST and a hammer, drive in a new oil seal until its surface is flush with the case upper surface.
SST 09316−60011 (09316−00011)

(c) Coat the lip of the oil seal with MP grease.

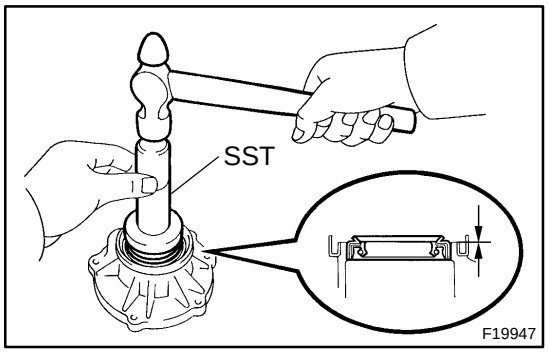

3. IF NECESSARY, REPLACE EXTENSION HOUSING OIL SEAL

(a) Using a screwdriver and hammer, drive out the oil seal.

(b) Using SST and a hammer, drive in a new oil seal until its surface is flush with the housing upper surface.
SST 09554−22010

(c) Coat the lip of the oil seal with MP grease.

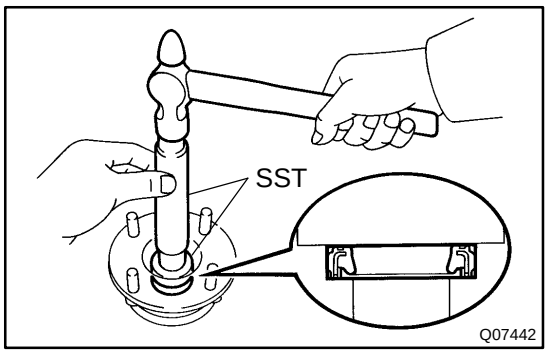

4. IF NECESSARY, REPLACE FRONT AND REAR COMPANION FLANGE OIL SEALS

(a) Using a screwdriver and hammer, drive out the 2 oil seals from the 2 flanges.

(b) Using SST and a hammer, drive in 2 new oil seals.
SST 09950−60010 (09951−00220, 09951−00350, 09952−06010), 09950−70010 (09951−07100)

(c) Coat the lip of the oil seal with MP grease.

PLANETARY GEAR

COMPONENTS

TR00N−09

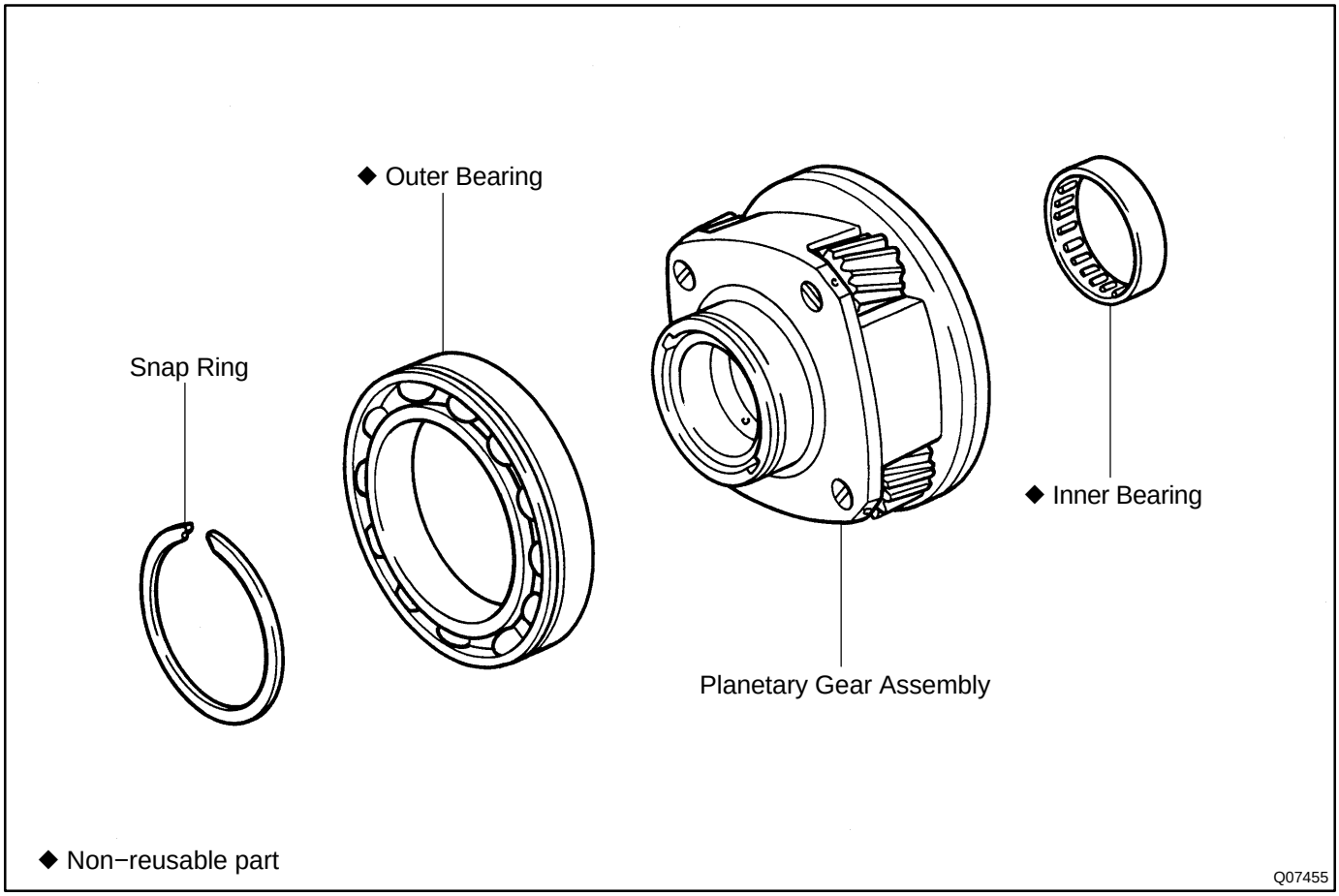

TR00O−10

INSPECTION

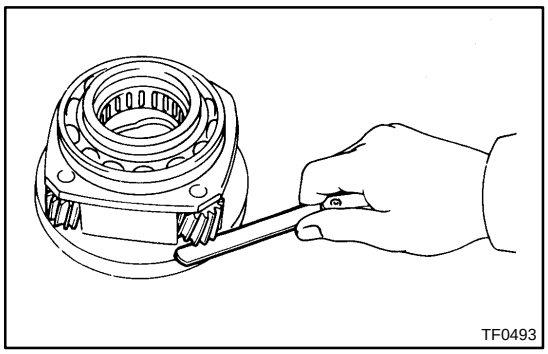
TF0493

1. INSPECT PINION GEAR THRUST CLEARANCE

Using a feeler gauge, measure the planetary pinion gear thrust clearance.

Standard clearance:
0.11 to 0.84 mm (0.0043 to 0.0331 in.)
Maximum clearance:
0.84 mm (0.0331 in.)

If the clearance exceeds the maximum, replace the planetary gear assembly.

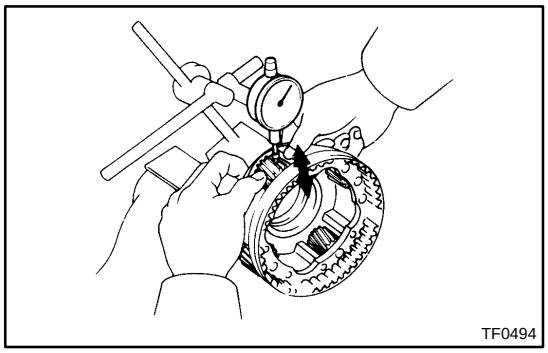
TF0494

2. INSPECT PLANETARY PINION GEAR RADIAL CLEARANCE

Using a dial indicator, measure the planetary pinion gear radial clearance.

Standard clearance:
0.009 to 0.038 mm (0.0004 to 0.0015 in.)
Maximum clearance:
0.038 mm (0.0015 in.)

If the clearance exceeds the maximum, replace the planetary gear assembly.

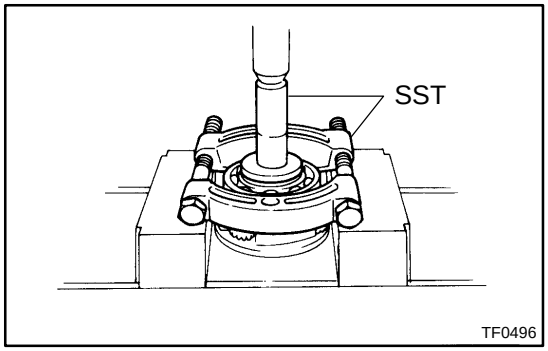

TF0496

3. IF NECESSARY, REPLACE PLANETARY GEAR OUTER BEARING

(a) Using a snap ring expander, remove the snap ring.

(b) Using SST and a press, remove the bearing.
SST 09554−30011, 09555−55010

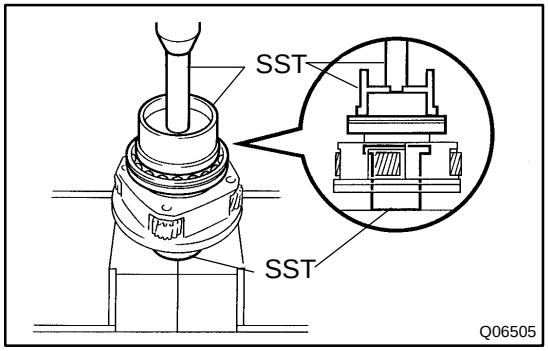

Q06505

(c) Using SST and a press, install a new bearing so that the groove does not face the planetary gear assembly.
SST 09223−15020, 09515−30010, 09950−70010 (09951−07100)

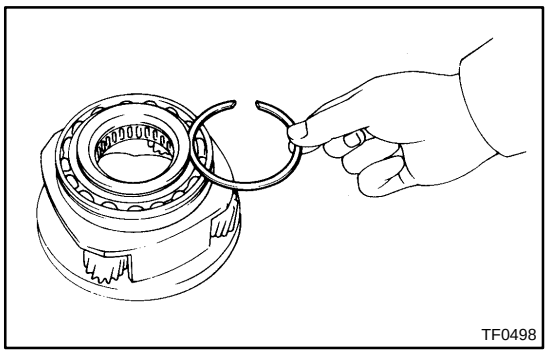

(d) Select a snap ring that allows for minimum axial play.

Mark	Thickness mm (in.)
1	1.45 to 1.50 (0.0571 to 0.0591)
2	1.50 to 1.55 (0.0591 to 0.0610)
3	1.55 to 1.60 (0.0610 to 0.0630)
4	1.60 to 1.65 (0.0630 to 0.0650)
5	1.65 to 1.70 (0.0650 to 0.0669)

(e) Using a snap ring expander, install a snap ring.

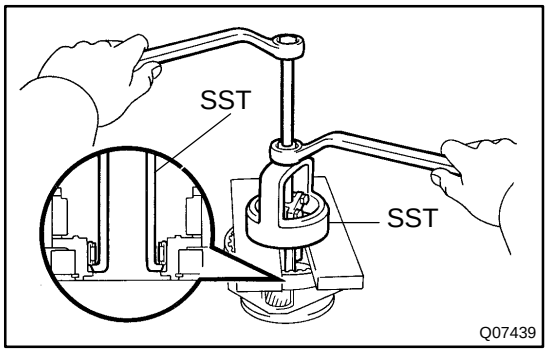

4. IF NECESSARY, REPLACE PLANETARY GEAR INNER BEARING

(a) Using SST, remove the bearing.
SST 09612−65014 (09612−01030, 09612−01050)

NOTICE:
Engage the claws of the SST securely so that there is no clearance between the inner bearing and planetary gear.

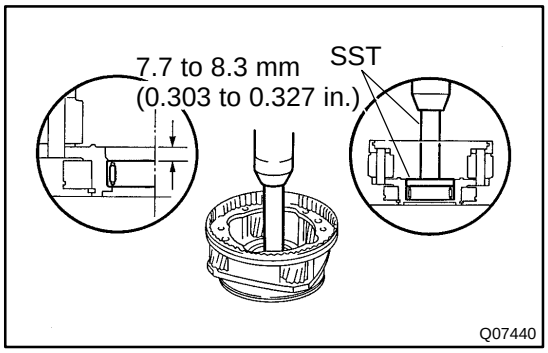

(b) Using SST and a press, install a new bearing.
SST 09950−60010 (09951−00570), 09950−70010 (09951−07100)
Bearing press in depth:
7.7 to 8.3 mm (0.303 to 0.327 in.)

REAR OUTPUT SHAFT

COMPONENTS

TR09M−02

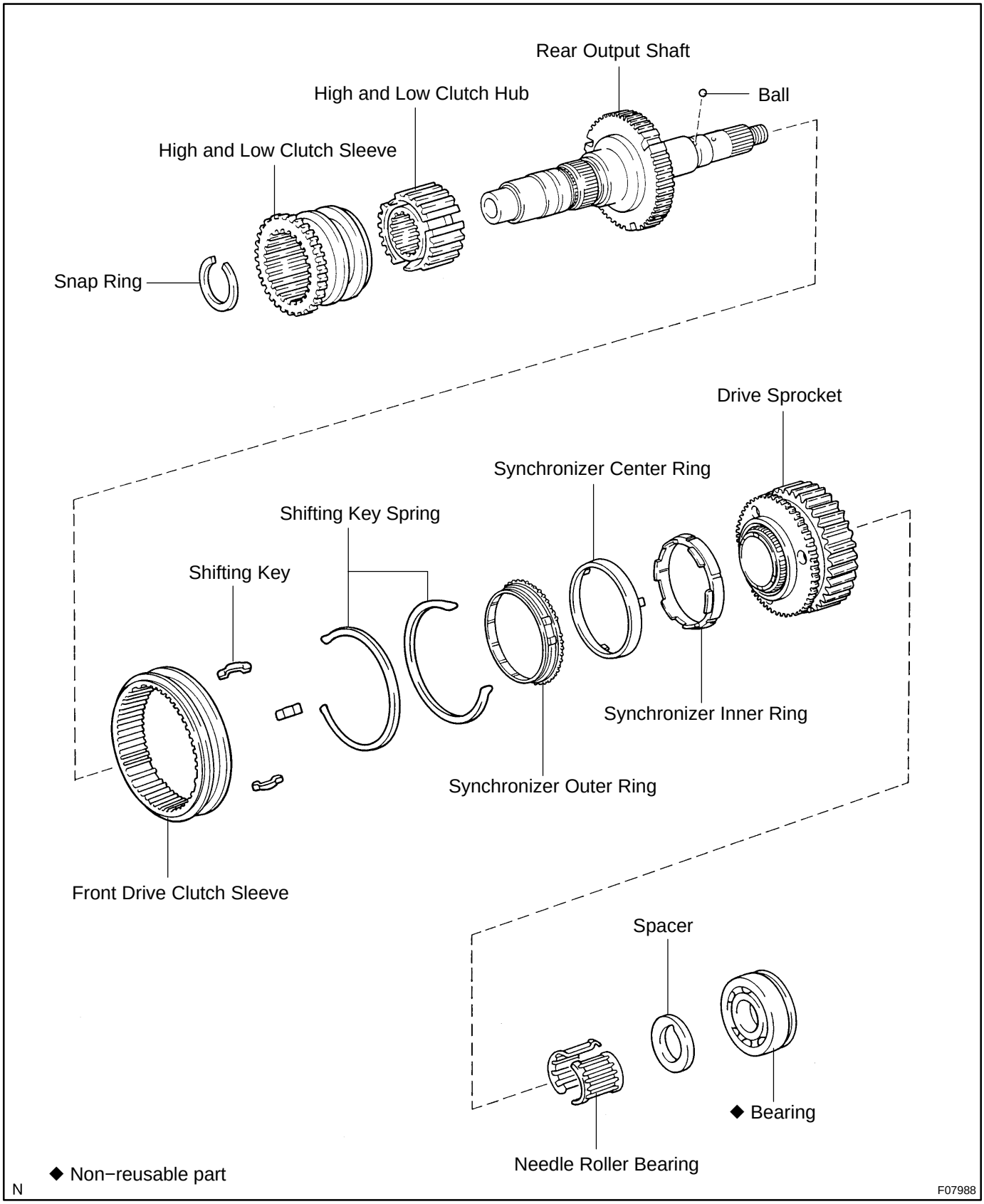

TR09N−03

DISASSEMBLY

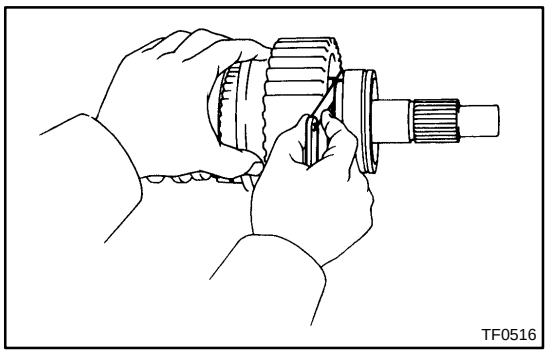

1. INSPECT DRIVE SPROCKET THRUST CLEARANCE

Using a feeler gauge, measure the drive sprocket thrust clearance.

Standard clearance:
0.10 to 0.25 mm (0.0039 to 0.0098 in.)
Maximum clearance: 0.25 mm (0.0098 in.)

If the clearance exceeds the maximum, replace the drive sprocket.

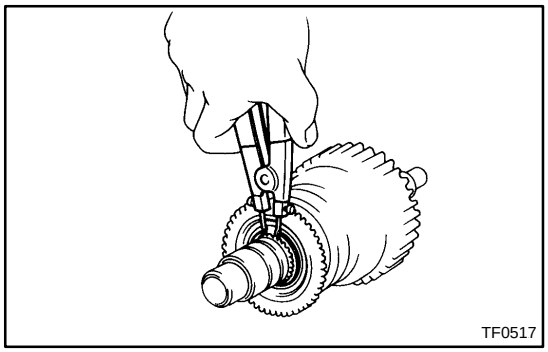

2. REMOVE HIGH AND LOW CLUTCH SLEEVE ASSEMBLY

(a) Remove the clutch sleeve.
(b) Using a snap ring expander, remove the snap ring.

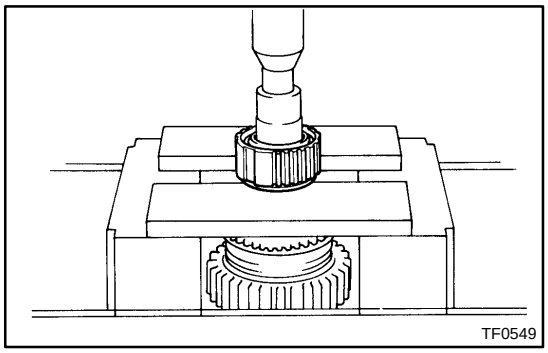

(c) Using a press, remove the clutch hub.

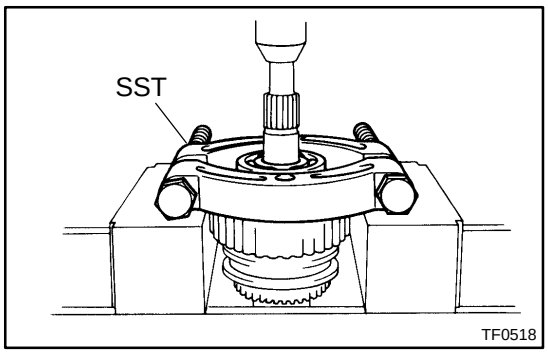

3. REMOVE BEARING, SPACER, DRIVE SPROCKET, SYNCHRONIZER OUTER, CENTER AND INNER RINGS AND FRONT DRIVE CLUTCH SLEEVE ASSEMBLY

(a) Using SST and a press, remove the bearing.
SST 09555−55010

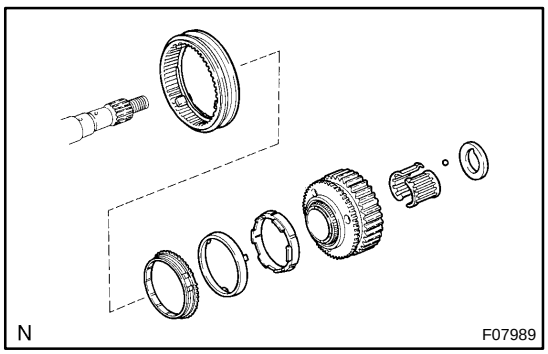

(b) Remove the spacer and ball.
(c) Remove the drive sprocket, needle roller bearing, synchronizer outer, center and inner rings.
(d) Remove the front drive clutch sleeve assembly.

4. REMOVE 3 SHIFTING KEYS AND 2 KEY SPRINGS FROM FRONT DRIVE CLUTCH SLEEVE

TR09O−03

INSPECTION

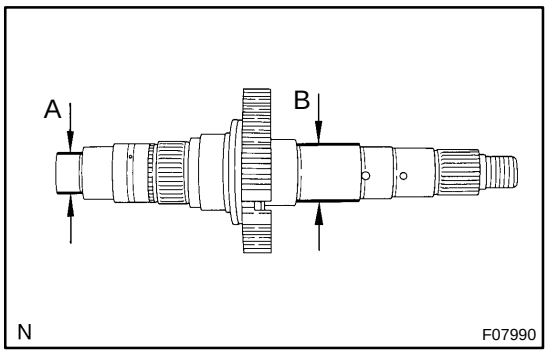

1. INSPECT REAR OUTPUT SHAFT

Using a micrometer, measure the rear output shaft journal surface outer diameter.

Minimum diameter:
Part A: 27.98 mm (1.1016 in.)
Part B: 36.98 mm (1.4561 in.)

If the outer diameter is less than the minimum, replace the rear output shaft.

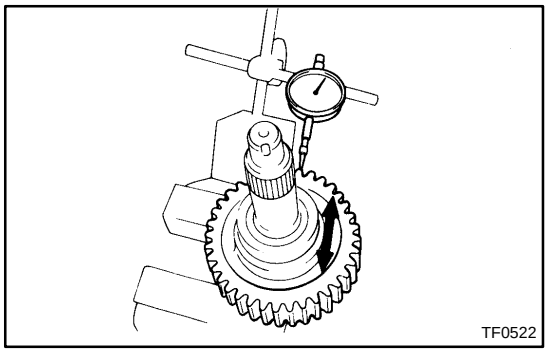

2. INSPECT DRIVE SPROCKET RADIAL CLEARANCE

Using a dial indicator, measure the radial clearance between the sprocket and shaft with the needle roller bearing installed.

Standard clearance:
0.010 to 0.055 mm (0.0004 to 0.0022 in.)
Maximum clearance: 0.055 mm (0.0022 in.)

If the clearance exceeds the maximum, replace the drive sprocket, rear output shaft or needle roller bearing.

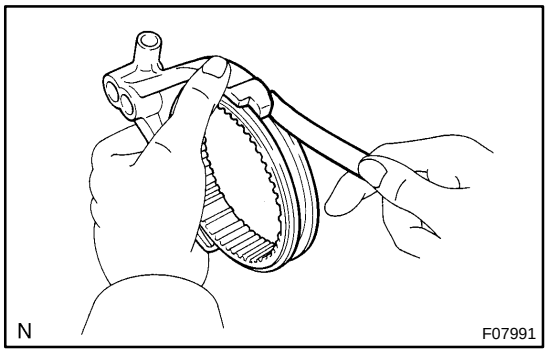

3. INSPECT FRONT DRIVE SHIFT FORK AND CLUTCH SLEEVE CLEARANCE

Using a feeler gauge, measure the clearance between the front drive shift fork and clutch sleeve.

Maximum clearance: 1.0 mm (0.039 in.)

If the clearance exceeds the maximum, replace the shift fork or clutch sleeve.

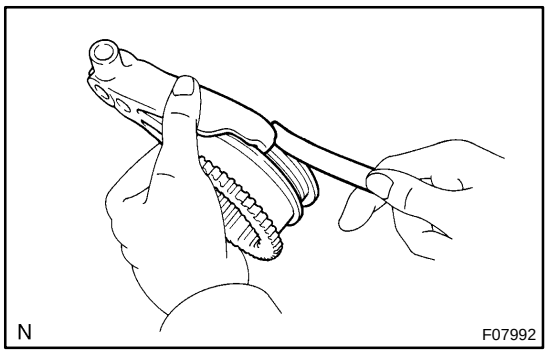

4. INSPECT HIGH AND LOW SHIFT FORK AND CLUTCH SLEEVE CLEARANCE

Using a feeler gauge, measure the clearance between the high and low shift fork and clutch sleeve.

Maximum clearance: 1.0 mm (0.039 in.)

If the clearance exceeds the maximum, replace the shift fork or clutch sleeve.

TR09P−03

REASSEMBLY

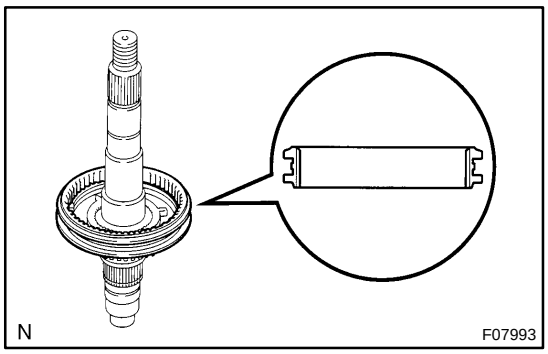

1. INSTALL FRONT DRIVE CLUTCH SLEEVE ONTO REAR OUTPUT SHAFT

(a) Install the front drive clutch sleeve onto the rear output shaft.

NOTICE:

Make sure that the clutch sleeve is installed in the correct direction.

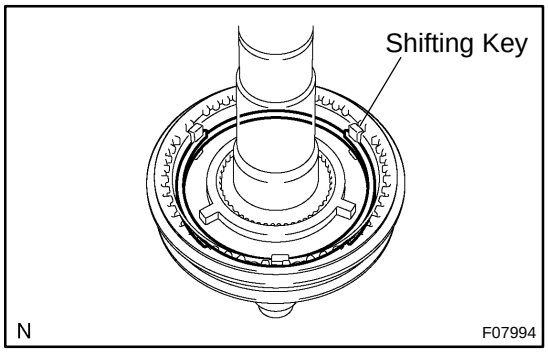

(b) Install the 3 shifting keys and 2 springs.

NOTICE:

Install the key springs so that their end gaps are not in line.

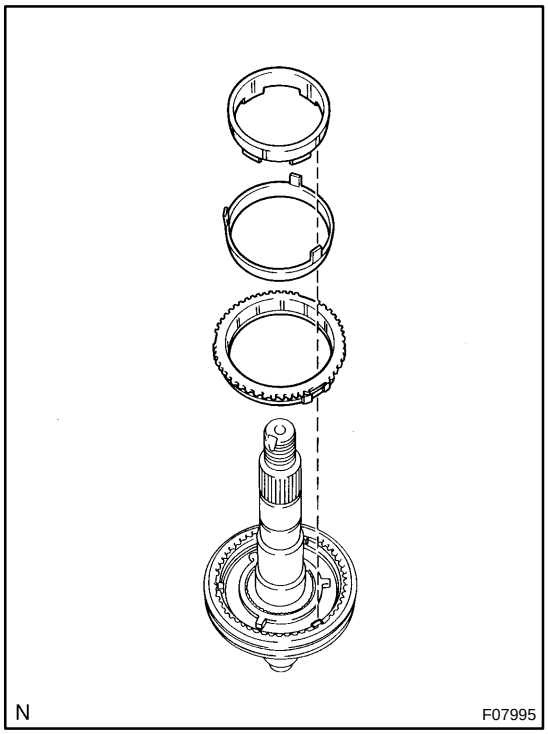

2. INSTALL SYNCHRONIZER OUTER, CENTER AND INNER RINGS, DRIVE SPROCKET, SPACER AND BEARING

(a) Apply gear oil to the rear output shaft and needle roller bearing.

(b) Install the synchronizer outer ring to the rear output shaft.

NOTICE:

Align the slots of the synchronizer outer ring with the shifting keys.

(c) Install the synchronizer center and inner rings to the rear output shaft.

NOTICE:

Align the slots of the synchronizer outer with those of inner rings.

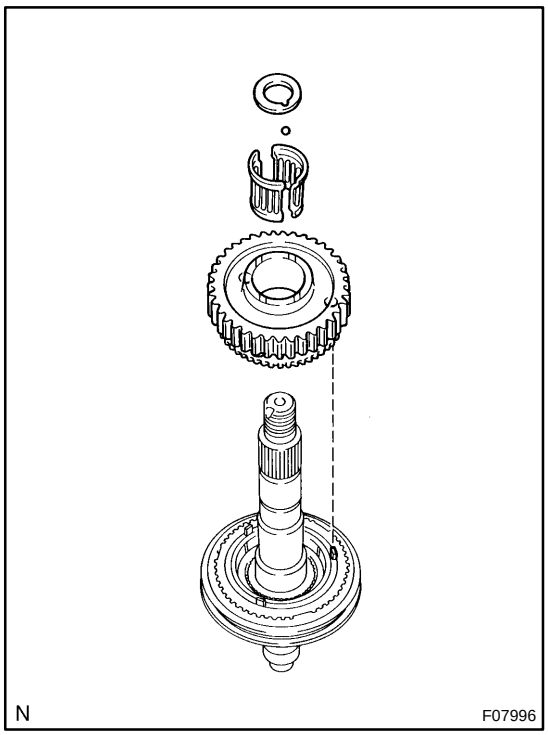

(d) Install the needle roller bearing to the rear output shaft.
(e) Install the drive sprocket to the rear output shaft.

NOTICE:

Align the holes in the drive sprocket with the protrusions of the synchronizer center ring.

(f) Install the spacer and align it with the ball.

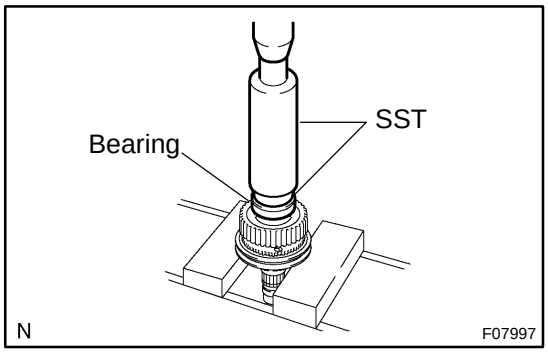

(g) Using SST and a press, install a new bearing with the spacer groove facing the drive sprocket.
SST 09316−60011 (09316−00011, 09316−00071)

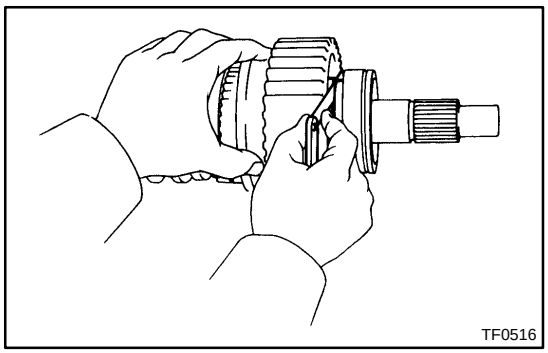

3. INSPECT DRIVE SPROCKET THRUST CLEARANCE

Using a feeler gauge, measure the drive sprocket thrust clearance.

Standard clearance:
0.10 to 0.25 mm (0.0039 to 0.0098 in.)

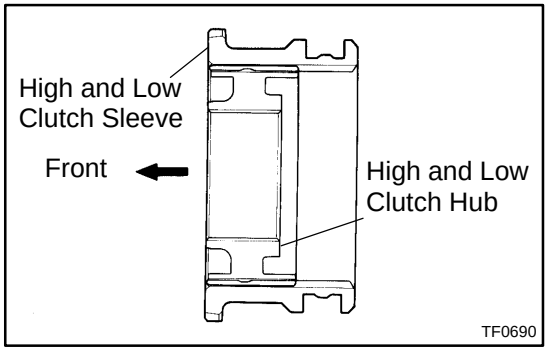

4. INSERT HIGH AND LOW CLUTCH HUB ONTO CLUTCH SLEEVE

NOTICE:

Make sure that the high and low clutch hub is installed in the correct direction.

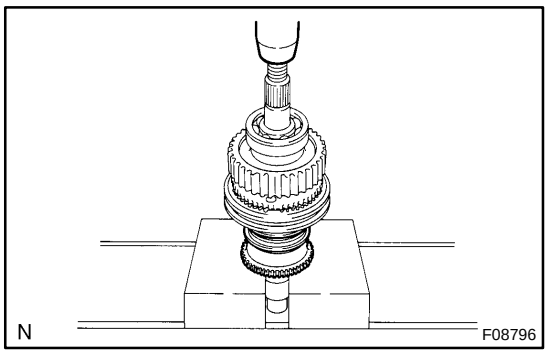

5. INSTALL HIGH AND LOW CLUTCH HUB ASSEMBLY

Using a press, install the high and low clutch hub assembly.

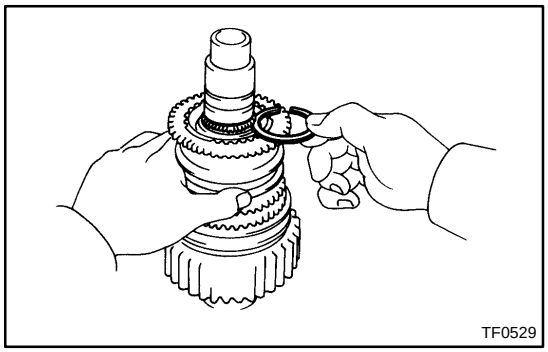

6. INSTALL SNAP RING

Select a snap ring that allows for minimum axial play and install it to the shaft.

Mark	Thickness mm (in.)
K	2.00 to 2.05 (0.0787 to 0.0807)
L	2.05 to 2.10 (0.0807 to 0.0827)
A	2.10 to 2.15 (0.0827 to 0.0846)
B	2.15 to 2.20 (0.0846 to 0.0866)
C	2.20 to 2.25 (0.0866 to 0.0886)
D	2.25 to 2.30 (0.0886 to 0.0906)
E	2.30 to 2.35 (0.0906 to 0.0925)
F	2.35 to 2.40 (0.0925 to 0.0945)
G	2.40 to 2.45 (0.0945 to 0.0965)
H	2.45 to 2.50 (0.0965 to 0.0984)
J	2.50 to 2.55 (0.0984 to 0.1004)

TRANSFER ASSEMBLY

COMPONENTS

TR09J−02

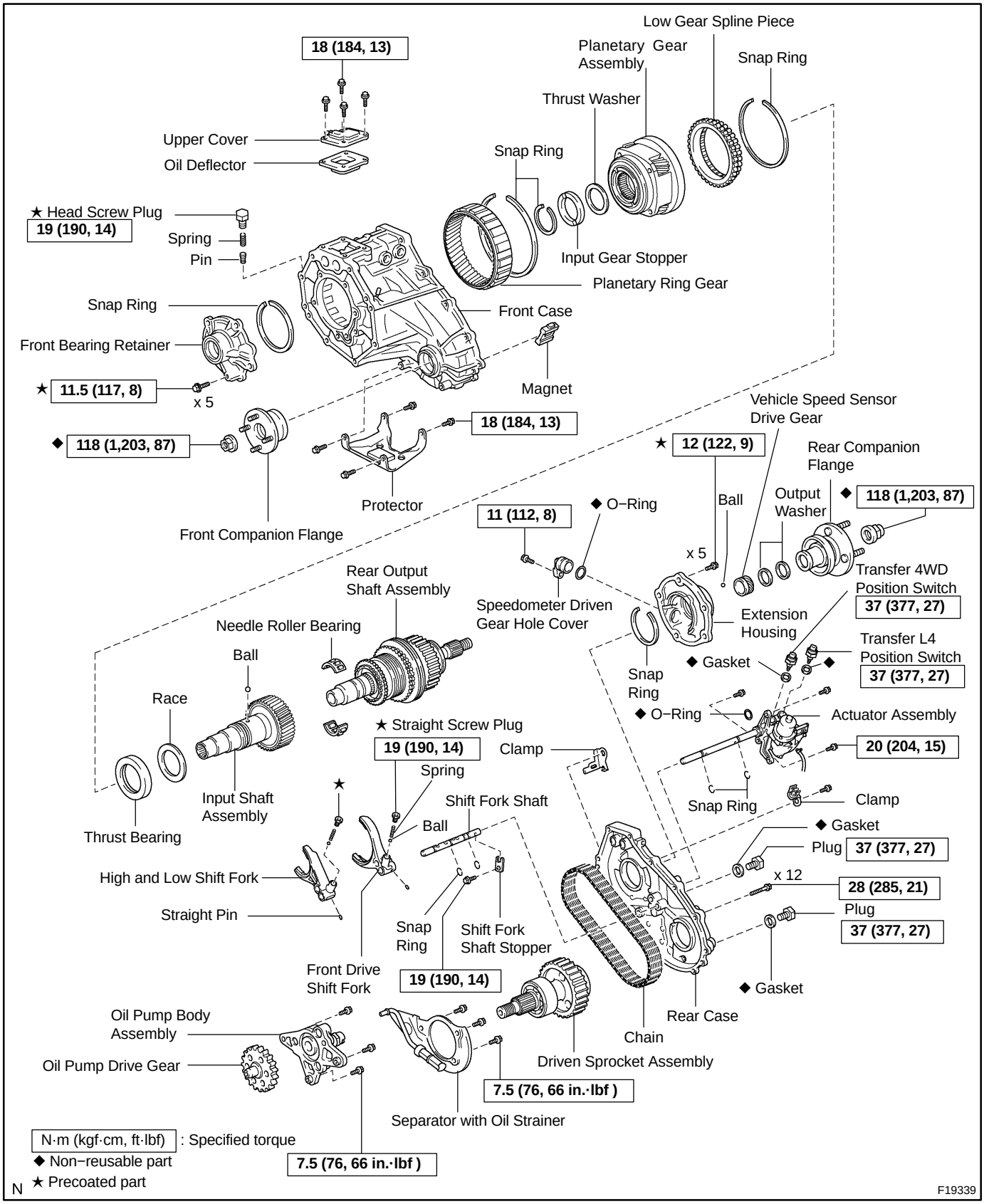

TR09K−03

DISASSEMBLY

1. REMOVE SPEEDOMETER DRIVEN GEAR HOLE COVER

(a) Remove the bolt and speedometer driven gear hole cover.

(b) Remove the O−ring from the speedometer driven gear hole cover.

2. REMOVE PROTECTOR

Remove the 4 bolts and protector.

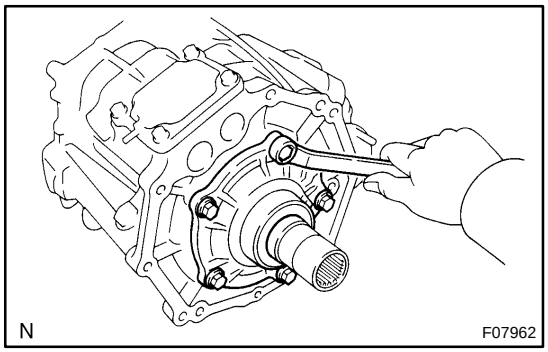

3. REMOVE FRONT BEARING RETAINER

(a) Remove the 5 bolts.

(b) Using a plastic hammer, tap on the front bearing retainer and remove it.

4. REMOVE UPPER COVER AND OIL DEFLECTOR

Remove the 4 bolts, upper cover and oil deflector.

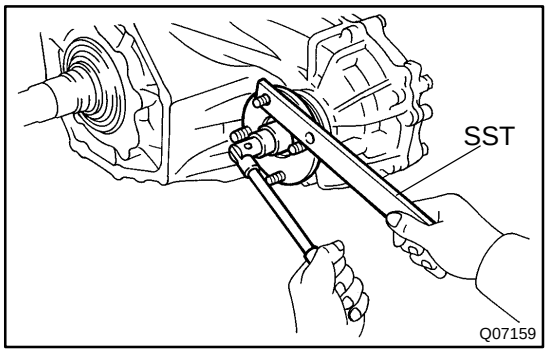

5. REMOVE FRONT COMPANION FLANGE

(a) Using a chisel and hammer, loosen the staked part of the front companion flange lock nut.

(b) Using SST, hold the front companion flange and remove the front companion flange lock nut.

SST 09330−00021

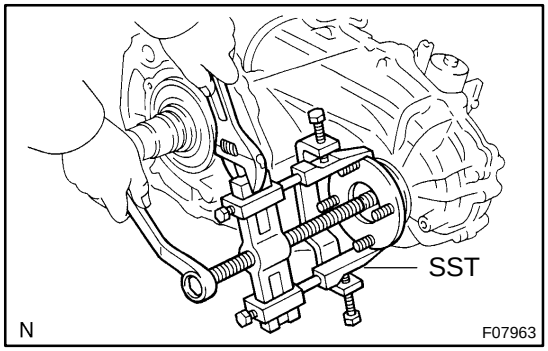

(c) Using SST, remove the front companion flange.

SST 09950−40011 (09951−04020, 09952−04010, 09953−04030, 09954−04010, 09955−04051, 09957−04010, 09958−04011)

6. REMOVE REAR COMPANION FLANGE

Remove the rear companion flange in the same way as the front companion flange.

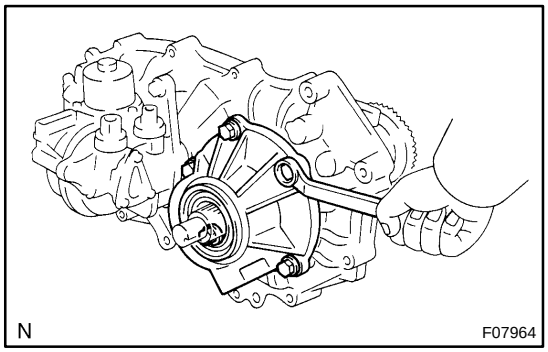

7. REMOVE EXTENSION HOUSING

(a) Remove the 5 bolts.

(b) Using a plastic hammer, tap on the extension housing and remove it.

8. REMOVE VEHICLE SPEED SENSOR DRIVE GEAR

(a) Remove the 2 output washers and vehicle speed sensor drive gear.

(b) Using a magnetic finger, remove the ball from the rear output shaft.

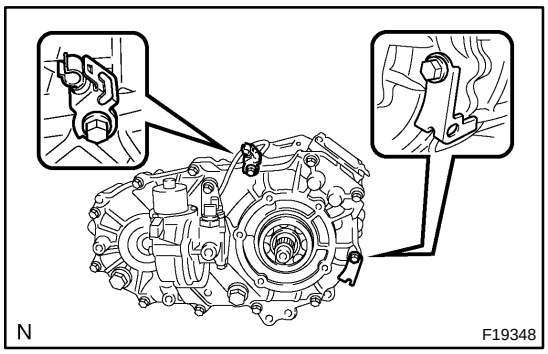

9. SEPARATE FRONT CASE AND REAR CASE

(a) Remove the 12 bolts and 2 clamps.

(b) Using a plastic hammer, tap on the front case and rear case, and separate them.

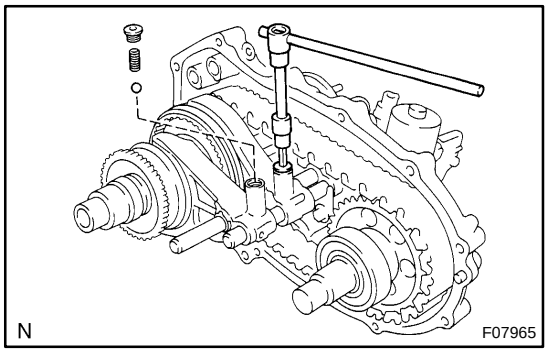

10. REMOVE SHIFT FORK SHAFT

(a) Using a hexagon wrench (6 mm), remove the 2 straight screw plugs, springs and balls from the front drive and high and low shift forks.

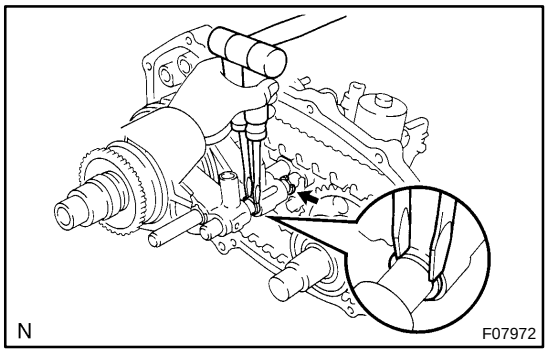

(b) Using 2 screwdrivers and a hammer, tap out the 2 snap rings from the shift fork shaft.

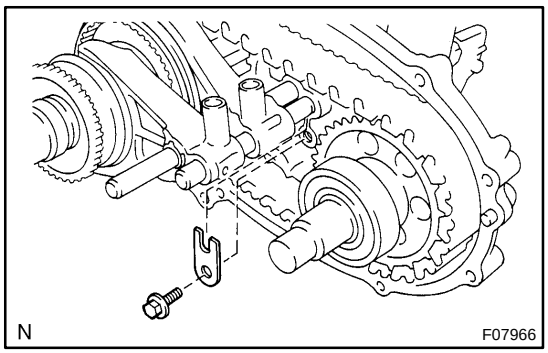

(c) Remove the bolt and shift fork shaft stopper.

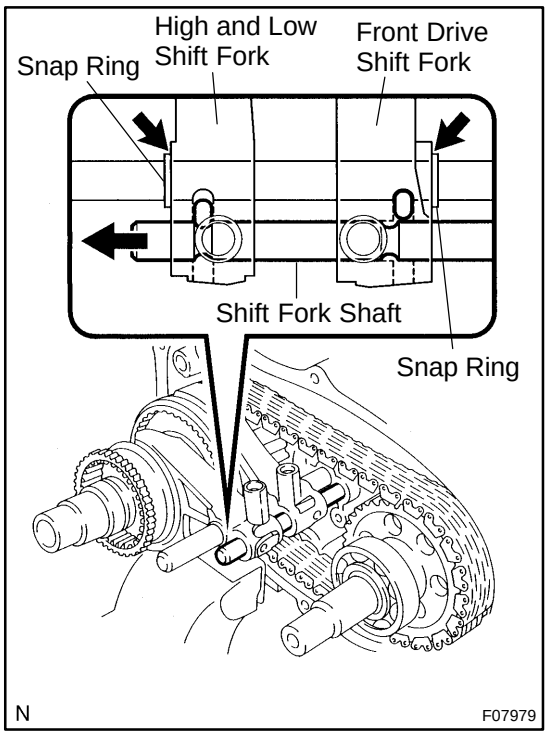

(d) To pull out the shift fork shaft, shift the front drive and high and low shift forks to the positions as shown in the illustration.

(e) Pull out the shift fork shaft.

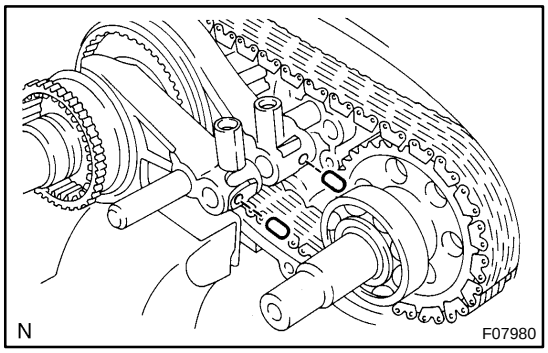

(f) Using a magnetic finger, remove the 2 straight pins from the front drive and high and low shift forks.

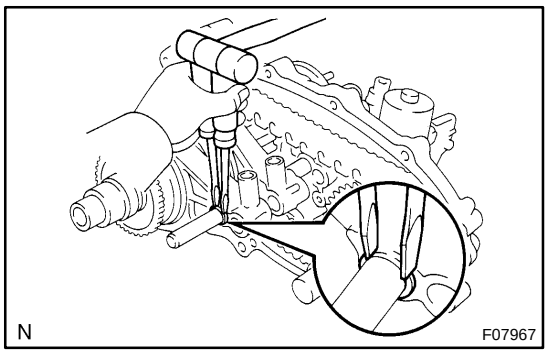

11. REMOVE REAR OUTPUT SHAFT ASSEMBLY, DRIVEN SPROCKET ASSEMBLY, CHAIN AND FRONT DRIVE AND HIGH AND LOW SHIFT FORKS

(a) Using 2 screwdrivers and a hammer, tap out the snap ring from the shift fork shaft of the actuator assembly.

HINT:

Remove only the snap ring on the front side of the shift fork shaft.

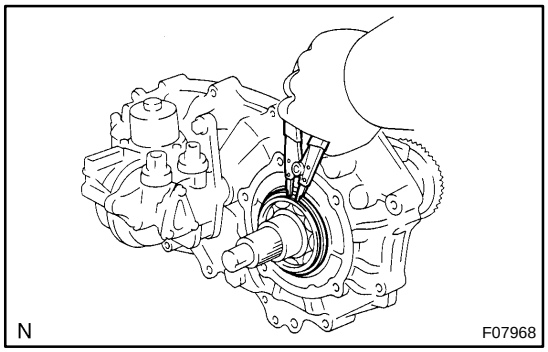

(b) Using a snap ring expander, remove the snap ring.

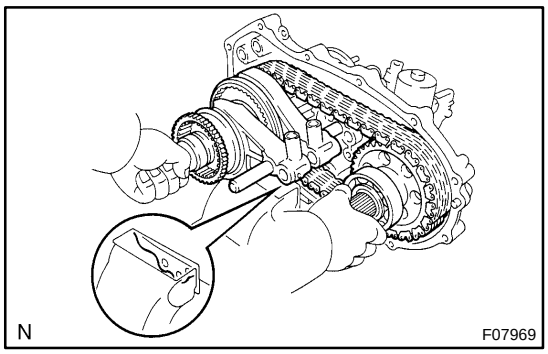

(c) Mount the rear case in a vise.
(d) Using a plastic hammer, carefully tap the rear case, and remove the rear output shaft assembly, driven sprocket assembly, chain and front drive and high and low shift forks as an assembly.
(e) Remove the driven sprocket assembly, chain and front drive and high and low shift forks from the rear output shaft assembly.

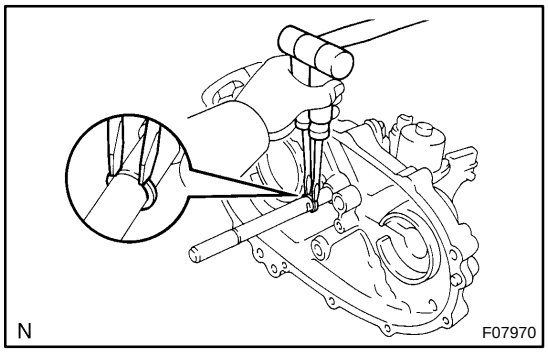

12. REMOVE ACTUATOR ASSEMBLY
(a) Using 2 screwdrivers and a hammer, remove the snap ring.
(b) Remove the 3 bolts and actuator assembly.

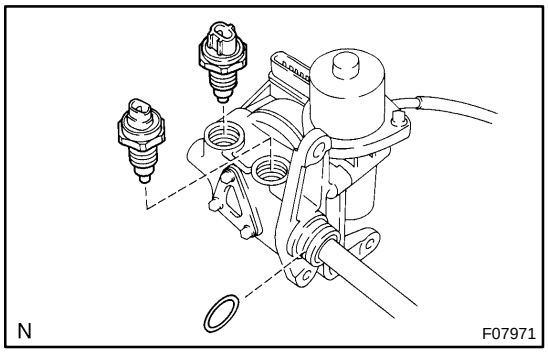

(c) Remove the O−ring, transfer 4WD position switch, transfer L4 position switch and 2 gaskets from the actuator assembly.

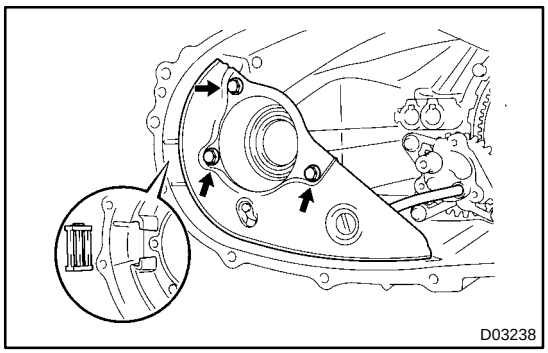

13. REMOVE SEPARATOR WITH OIL STRAINER AND MAGNET
Remove the 3 bolts and separator with the oil strainer and magnet.

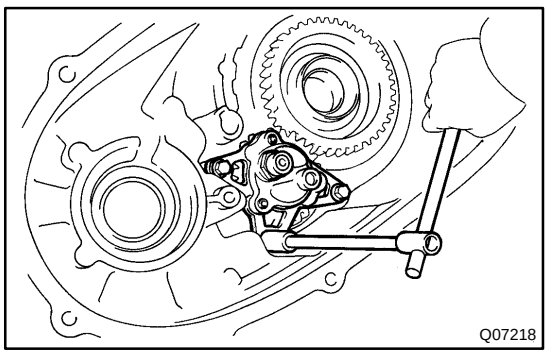

14. REMOVE OIL PUMP BODY ASSEMBLY
Remove the 3 bolts and oil pump body assembly.
15. REMOVE OIL PUMP DRIVE GEAR

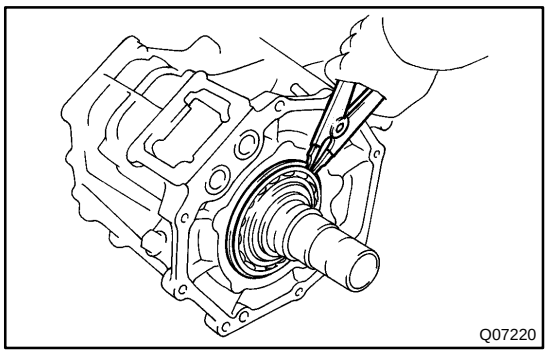

16. REMOVE PLANETARY GEAR ASSEMBLY WITH INPUT SHAFT ASSEMBLY

(a) Using a snap ring expander, remove the snap ring.

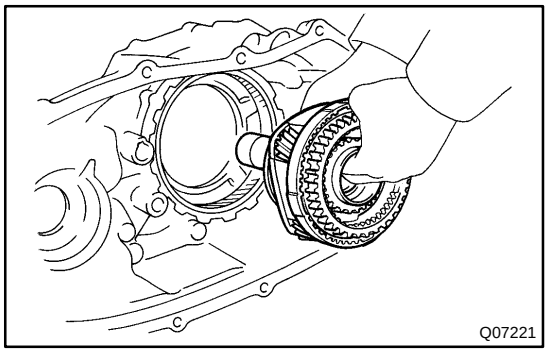

(b) Pull out the planetary gear assembly with the input shaft assembly.

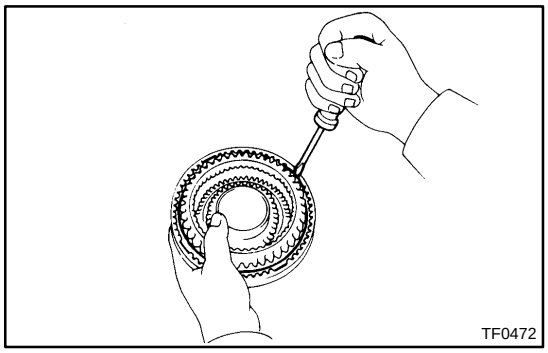

17. REMOVE LOW GEAR SPLINE PIECE

(a) Using a screwdriver, remove the snap ring.

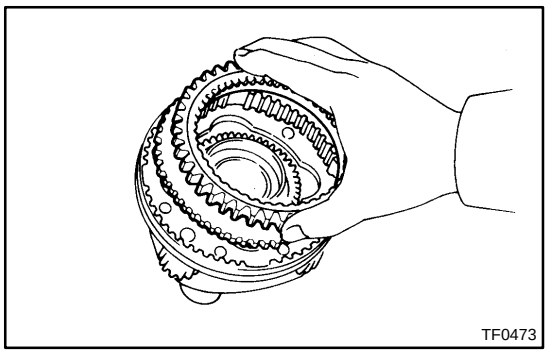

(b) Remove the low gear spline piece.

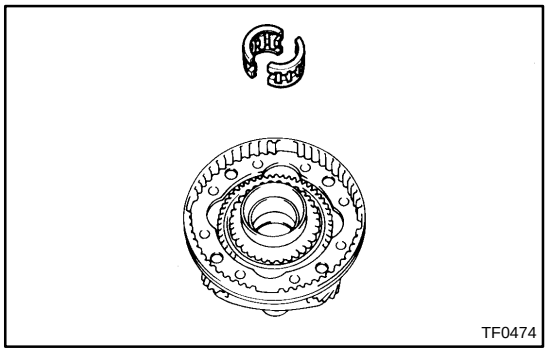

18. REMOVE NEEDLE ROLLER BEARING FROM INPUT SHAFT ASSEMBLY

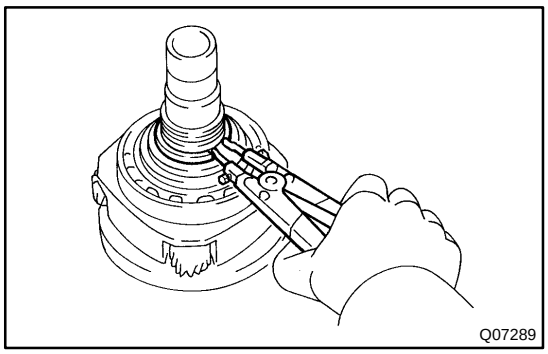

19. REMOVE INPUT GEAR STOPPER AND THRUST WASHER

(a) Using a snap ring expander, remove the snap ring.

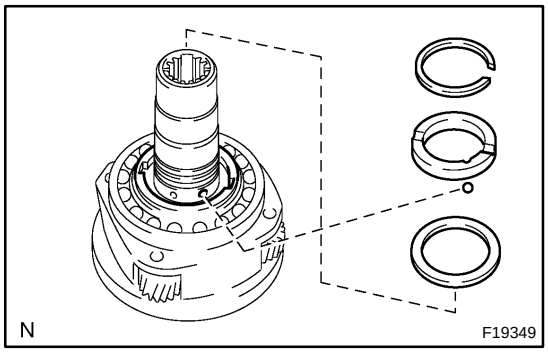

(b) Remove the input gear stopper, ball and thrust washer.

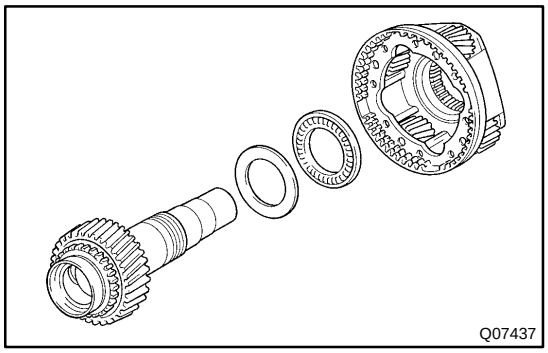

20. REMOVE INPUT SHAFT ASSEMBLY, THRUST BEARING AND RACE

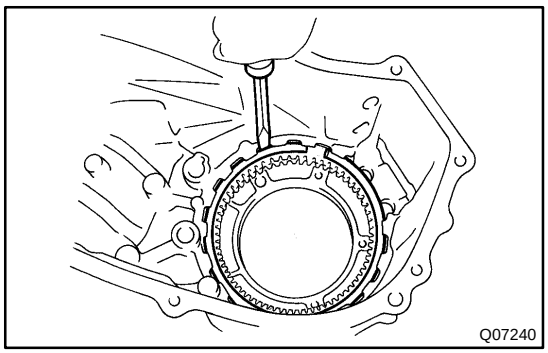

21. REMOVE PLANETARY RING GEAR

(a) Using a screwdriver, remove the snap ring.

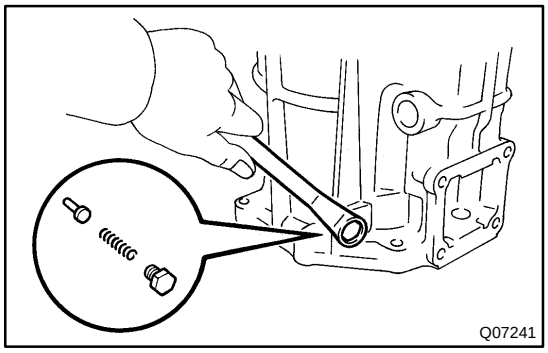

(b) Remove the head screw plug, spring and pin.

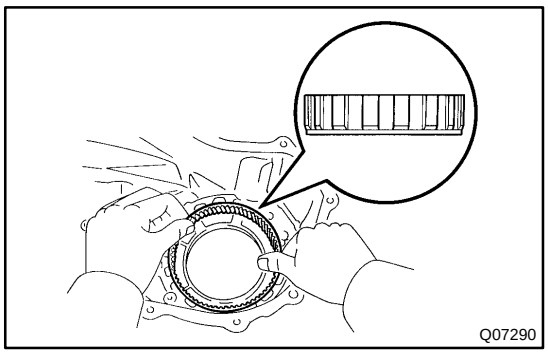

(c) Remove the planetary ring gear.

TR0DP−01

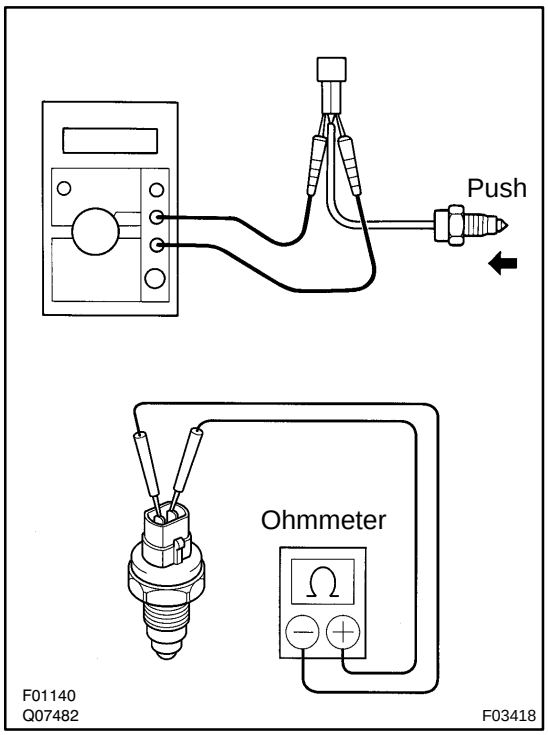

INSPECTION

INSPECT SWITCH

Measure the resistance between the terminals as shown.

Standard:

Switch Condition	Specified Condition
Pushed	Below 1 Ω
Free	10 k Ω or higher

If the result is not as specified, replace the switch.

TR09L−03

REASSEMBLY

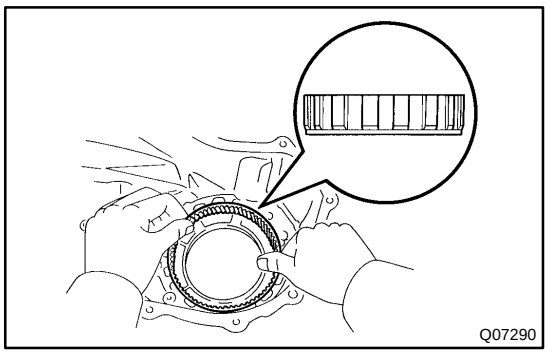

HINT:

Coat all of the sliding and rotating surfaces with gear oil before reassembly.

1. INSTALL PLANETARY RING GEAR

(a) Install the planetary ring gear.

NOTICE:

Make sure that the planetary ring gear is installed in the correct direction.

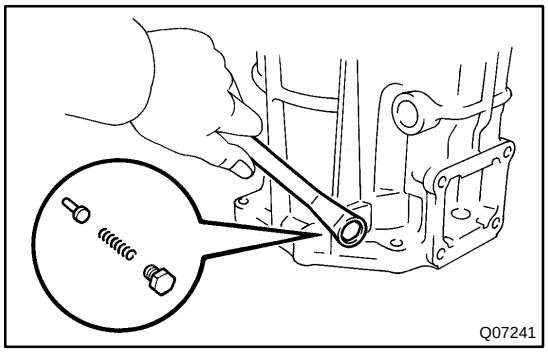

(b) Install the pin and spring.

(c) Apply sealant to the head screw plug threads.

Sealant:

Part No. 08833−00080, THREE BOND 1344, LOCTITE 242 or equivalent

(d) Install the head screw plug.

Torque: 19 N·m (190 kgf·cm, 14 ft·lbf)

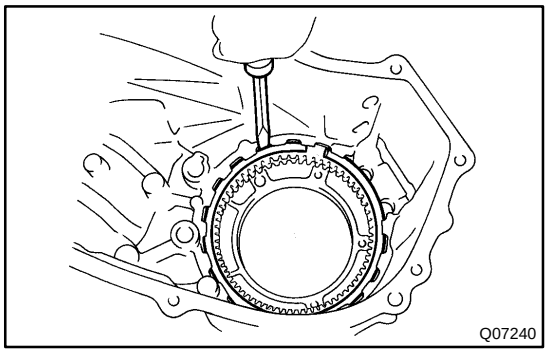

(e) Using a screwdriver, install the snap ring.

NOTICE:

Make sure the end gap of the snap ring is not aligned with the upper side of the case.

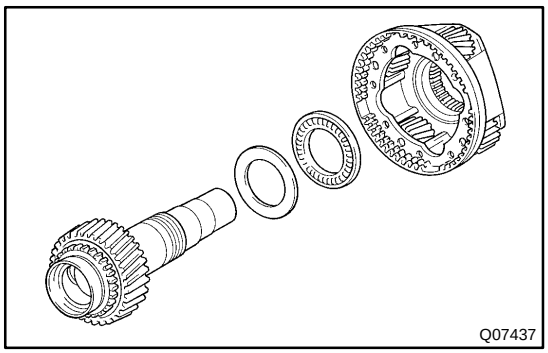

2. INSTALL INPUT SHAFT ASSEMBLY, THRUST BEARING AND RACE

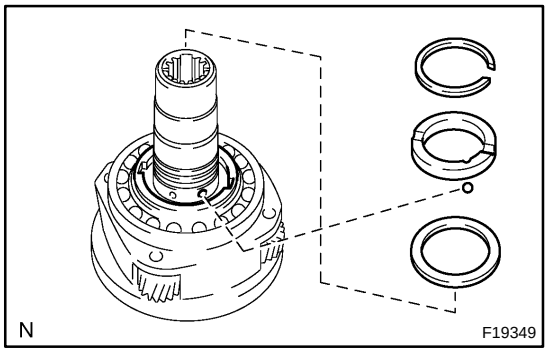

3. INSTALL THRUST WASHER AND INPUT GEAR STOPPER

(a) Install the thrust washer, ball and input gear stopper.

HINT:

Apply gear oil to the input gear stopper and thrust washer.

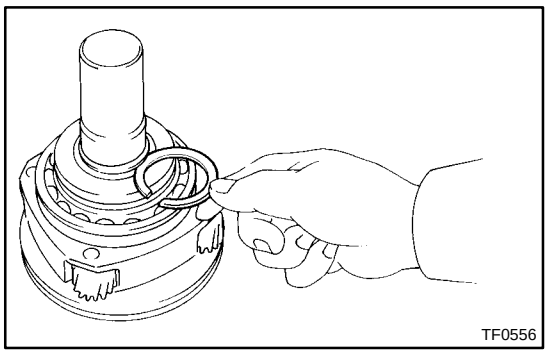
TF0556

(b) Select a snap ring that allows for 0.05 to 0.15 mm (0.0020 to 0.0059 in.) axial play.

Mark	Thickness mm (in.)
A	2.10 to 2.15 (0.0827 to 0.0846)
B	2.15 to 2.20 (0.0846 to 0.0866)
C	2.20 to 2.25 (0.0866 to 0.0886)
D	2.25 to 2.30 (0.0886 to 0.0906)
E	2.30 to 2.35 (0.0906 to 0.0925)
F	2.35 to 2.40 (0.0925 to 0.0945)
G	2.40 to 2.45 (0.0945 to 0.0965)
H	2.45 to 2.50 (0.0965 to 0.0984)
J	2.50 to 2.55 (0.0984 to 0.1004)
K	2.55 to 2.60 (0.1004 to 0.1024)
L	2.60 to 2.65 (0.1024 to 0.1043)
M	2.65 to 2.70 (0.1043 to 0.1063)
N	2.70 to 2.75 (0.1063 to 0.1083)
P	2.75 to 2.80 (0.1083 to 0.1102)
Q	2.80 to 2.85 (0.1102 to 0.1122)
R	2.85 to 2.90 (0.1122 to 0.1142)
S	2.90 to 2.95 (0.1142 to 0.1161)
T	2.95 to 3.00 (0.1161 to 0.1181)
U	3.00 to 3.05 (0.1181 to 0.1201)

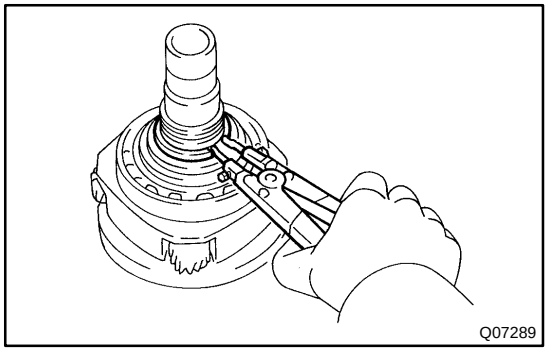
Q07289

(c) Using a snap ring expander, install a snap ring.

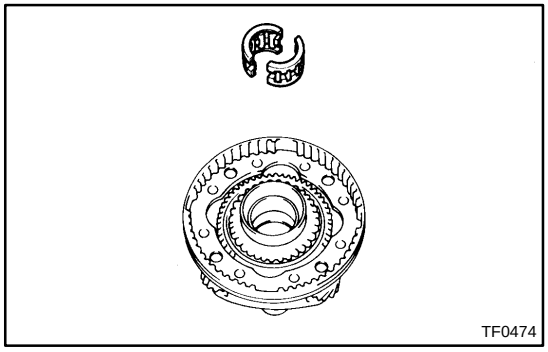
TF0474

4. INSTALL NEEDLE ROLLER BEARING TO INPUT SHAFT ASSEMBLY

HINT:

Apply gear oil to the needle roller bearing.

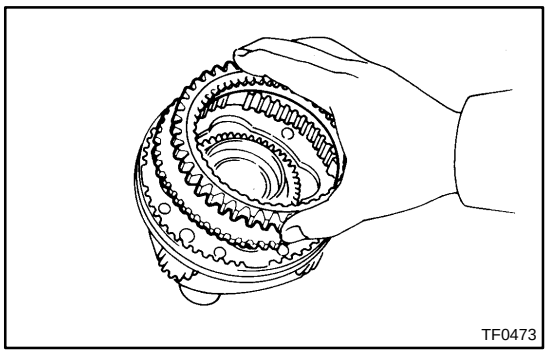

5. INSTALL LOW GEAR SPLINE PIECE

(a) Install the low gear spline piece.

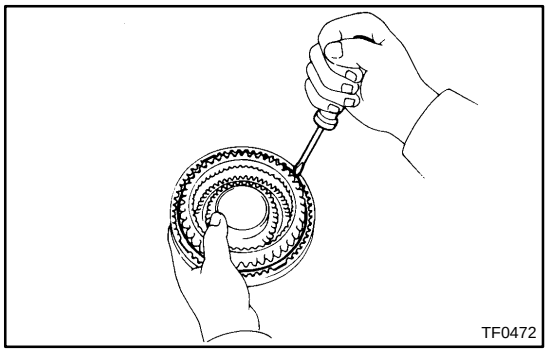

(b) Using a screwdriver, install the snap ring.

NOTICE:

Make sure the end gap of the snap ring is not aligned with the cutout portion of the planetary carrier.

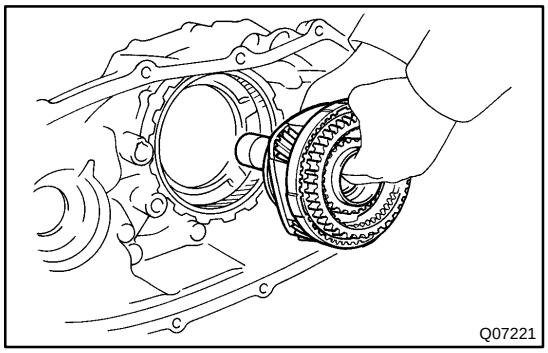

6. INSTALL PLANETARY GEAR ASSEMBLY WITH INPUT SHAFT ASSEMBLY

(a) Install the planetary gear assembly with the input shaft assembly.

HINT:

If necessary, heat the front case to about 50 to 80 °C (122 to 176 °F).

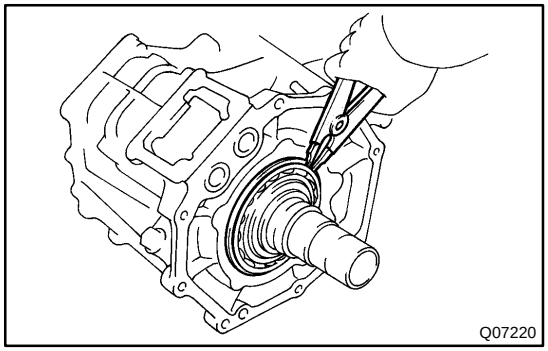

(b) Using a snap ring expander, install the snap ring.

HINT:

Check that the planetary gear and input shaft assembly turn slightly.

7. INSTALL OIL PUMP DRIVE GEAR

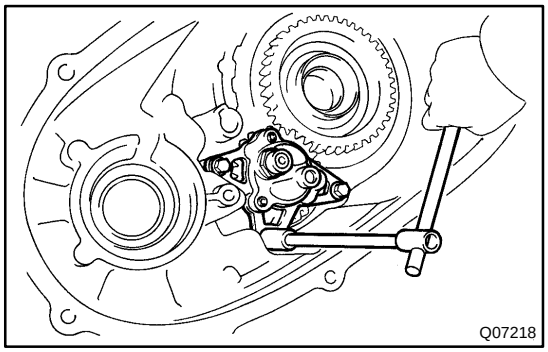

8. INSTALL OIL PUMP BODY ASSEMBLY

Install the oil pump body assembly with the 3 bolts.

Torque: 7.5 N·m (76 kgf·cm, 66 in.·lbf)

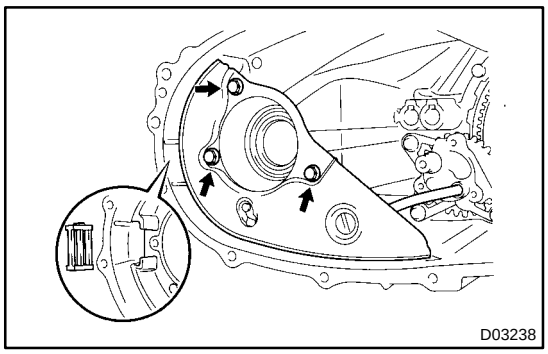

9. INSTALL MAGNET AND SEPARATOR WITH OIL STRAINER

(a) Install the magnet to the front case.

(b) Install the separator with oil strainer with the 3 bolts.
Torque: 7.5 N·m (76 kgf·cm, 66 in.·lbf)

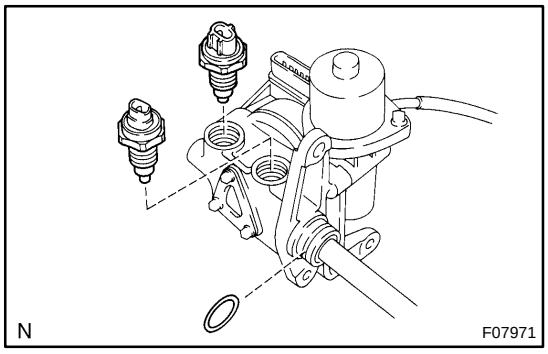

10. INSTALL ACTUATOR ASSEMBLY

(a) Install a new O−ring, 2 new gaskets, transfer 4WD position switch and transfer L4 position switch to the actuator assembly.
Torque: 37 N·m (377 kgf·cm, 27 ft·lbf)

HINT:
Coat a new O−ring with gear oil.

(b) Install the actuator assembly with the 3 bolts.
Torque: 20 N·m (204 kgf·cm, 15 ft·lbf)

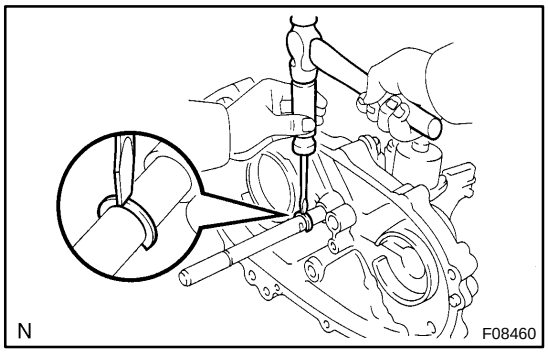

(c) Using a screwdriver and hammer, drive in the snap ring to the shift fork shaft of the actuator assembly.

HINT:
Install only the snap ring on the rear side of the shift fork shaft.

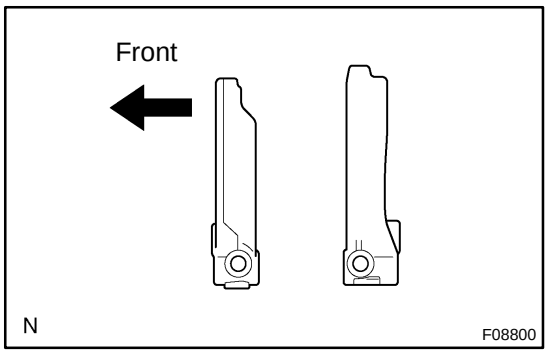

11. INSTALL REAR OUTPUT SHAFT ASSEMBLY, DRIVEN SPROCKET ASSEMBLY, CHAIN AND FRONT DRIVE AND HIGH AND LOW SHIFT FORKS

(a) Install the driven sprocket assembly, chain and front drive and high and low shift forks to the rear output shaft assembly.

NOTICE:
Make sure that the front drive and high and low shift forks are installed in the correct direction.

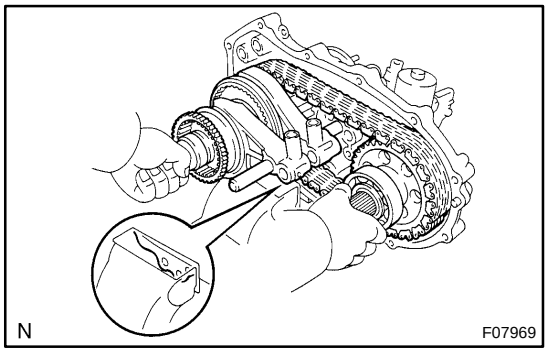

(b) Mount the rear case in a vise.

(c) Install the rear output shaft assembly, driven sprocket assembly, chain and front drive and high and low shift forks to the rear case as an assembly.

NOTICE:
Do not drop the clutch sleeve or shifting key.

HINT:
If necessary, heat the rear case to about 50 to 80 °C (122 to 176 °F).

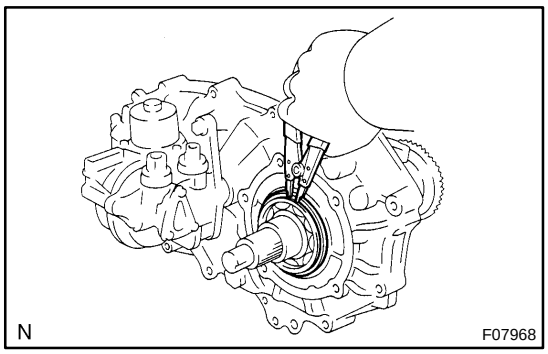

(d) Using a snap ring expander, install the snap ring.

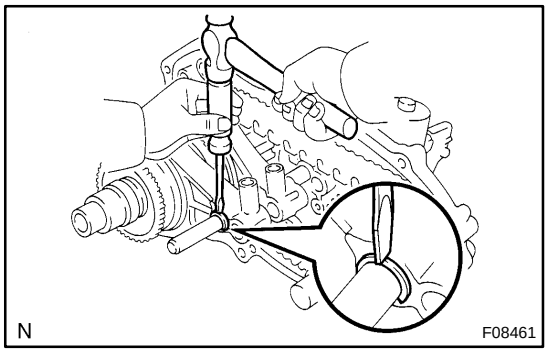

(e) Using a screwdriver and hammer, drive in the snap ring to the shift fork shaft of the actuator assembly.

HINT:

Check that the rear output shaft assembly and driven sprocket assembly turn slightly.

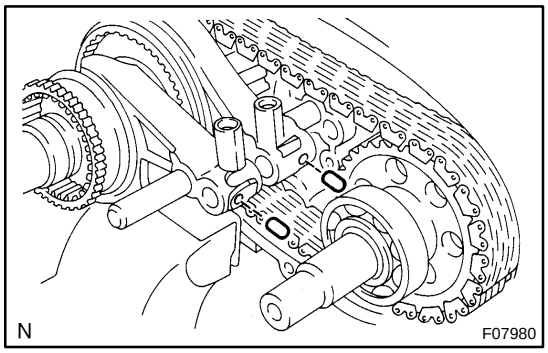

12. INSTALL SHIFT FORK SHAFT

(a) Using a magnetic finger, install the 2 straight pins to the front drive and high and low shift forks.

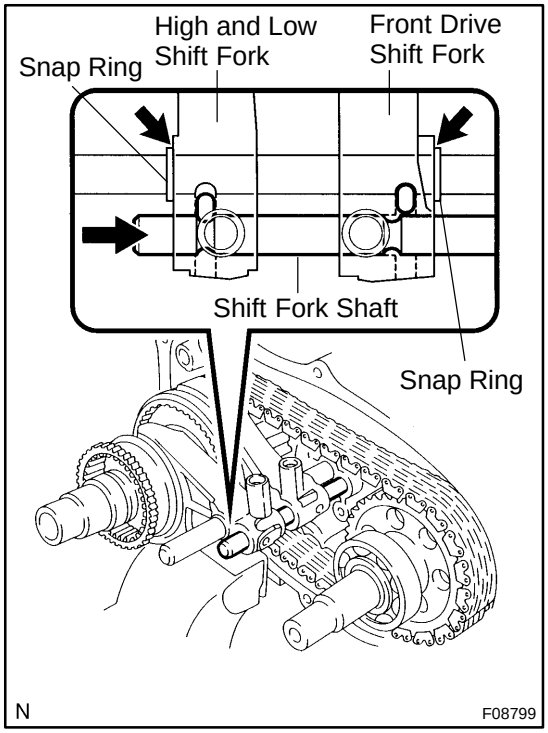

(b) To push into the shift fork shaft, shift the front drive and high and low shift forks to the positions as shown in the illustration.

(c) Push into the shift fork shaft.

NOTICE:

Make sure that the shift fork shaft is installed in the correct direction.

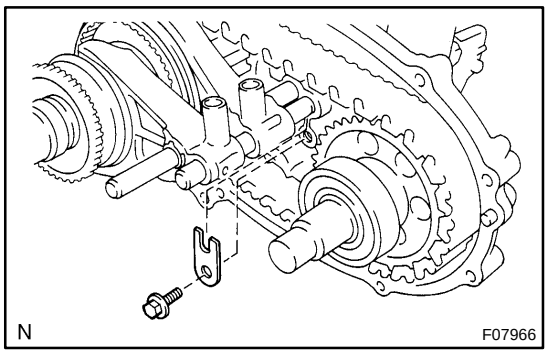

(d) Install the shift fork shaft stopper with the bolt.
Torque: 19 N·m (190 kgf·cm, 14 ft·lbf)

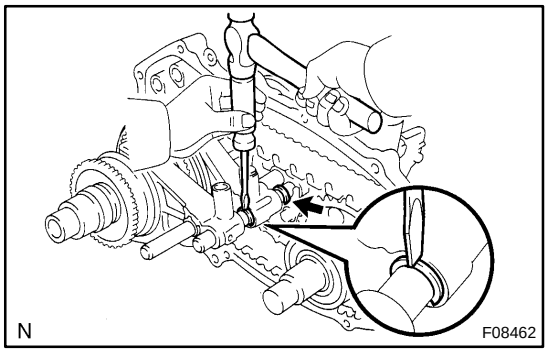

(e) Using a screwdriver and hammer, drive in the 2 snap rings to the shift fork shaft.

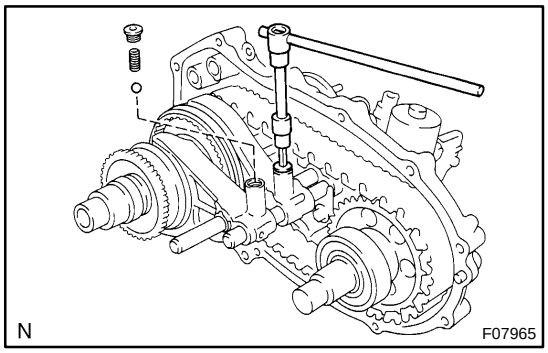

(f) Install the 2 balls and springs to the front drive and high and low shift forks.
(g) Apply sealant to the straight screw plug threads.
Sealant:
Part No. 08833−00080, THREE BOND 1344, LOCTITE 242 or equivalent
(h) Using a hexagon wrench (6 mm), install the 2 straight screw plugs to the front drive and high and low shift forks.
Torque: 19 N·m (190 kgf·cm, 14 ft·lbf)

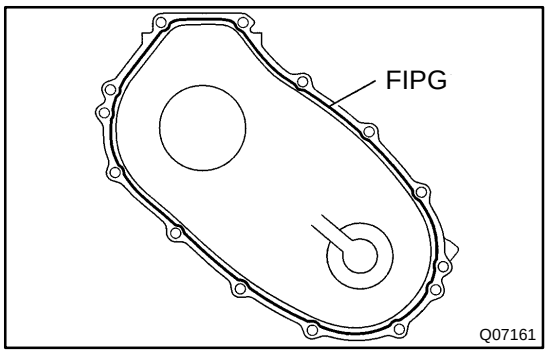

13. REASSEMBLE FRONT AND REAR CASE
HINT:
Remove any FIPG material and be careful not to drop oil on the contacting surface of the rear case.
(a) Apply FIPG to the rear case as shown in the illustration.
FIPG:
Part No. 08826−00090,
THREE BOND 1281 or equivalent

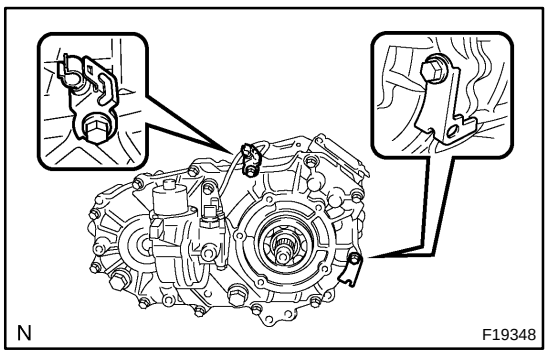

(b) Install the 2 clamps and reassemble the front and rear case with the 12 bolts.
Torque: 28 N·m (285 kgf·cm, 21 ft·lbf)

14. INSTALL VEHICLE SPEED SENSOR DRIVE GEAR
(a) Install the ball to the rear output shaft.
(b) Install the vehicle speed sensor drive gear and 2 output washers.

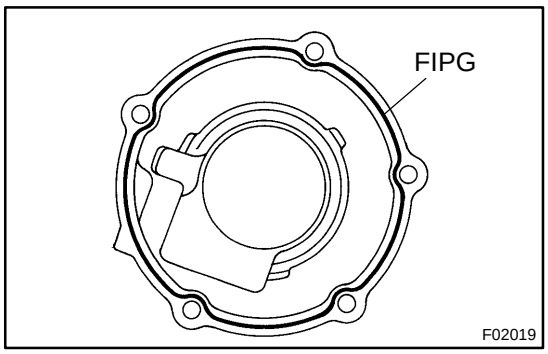

15. INSTALL EXTENSION HOUSING

HINT:

Remove any FIPG material and be careful not to drop oil on the contacting surface of the extension housing.

(a) Apply FIPG to the extension housing as shown in the illustration.

FIPG:

Part No. 08826−00090,

THREE BOND 1281 or equivalent

(b) Apply sealant to the bolt threads.

Sealant:

Part No. 08833−00080, THREE BOND 1344, LOCTITE 242 or equivalent

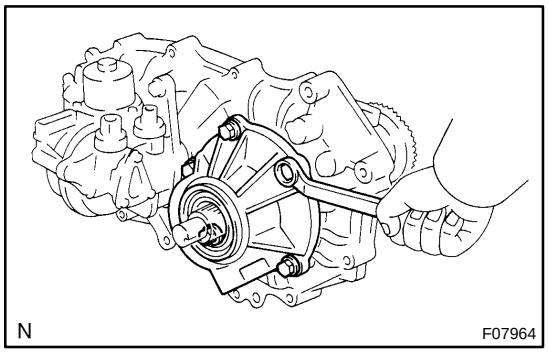

(c) Install the extension housing with the 5 bolts.

Torque: 12 N·m (122 kgf·cm, 9 ft·lbf)

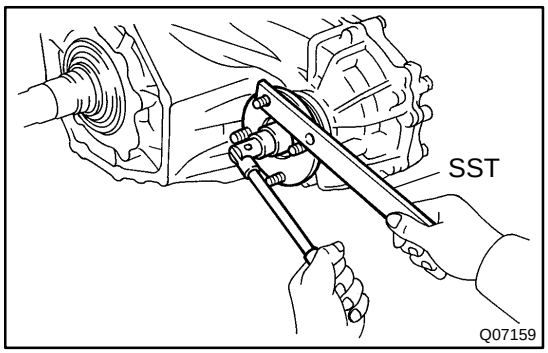

16. INSTALL FRONT COMPANION FLANGE

(a) Install the front companion flange to the input shaft.

(b) Using SST, hold the front companion flange, and install a new front companion flange lock nut.

SST 09330−00021

Torque: 118 N·m (1,203 kgf·cm, 87 ft·lbf)

(c) Stake the front companion flange lock nut.

17. INSTALL REAR COMPANION FLANGE

Install the rear companion flange in the same way as the front companion flange.

18. INSTALL OIL DEFLECTOR AND UPPER COVER

Install 2 new gaskets, oil deflector and upper cover with the 4 bolts.

Torque: 18 N·m (184 kgf·cm, 13 ft·lbf)

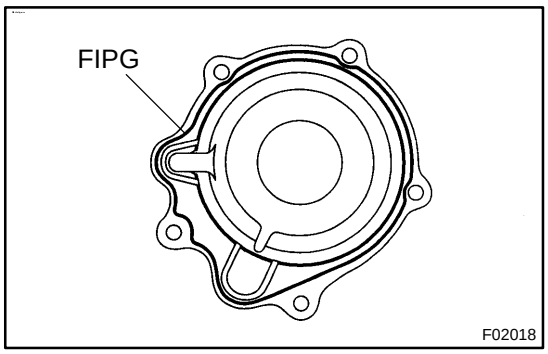

19. INSTALL FRONT BEARING RETAINER

HINT:

Remove any FIPG material and be careful not to drop oil on the contacting surface of the front bearing retainer.

(a) Apply FIPG to the front bearing retainer as shown in the illustration.

FIPG:

Part No. 08826−00090,

THREE BOND 1281 or equivalent

(b) Apply sealant to the bolt threads.

Sealant:

Part No. 08833−00080, THREE BOND 1344, LOCTITE 242 or equivalent

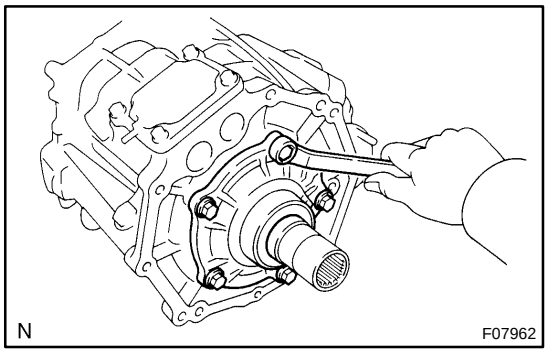

(c) Install the front bearing retainer with the 5 bolts.

Torque: 11.5 N·m (117 kgf·cm, 8 ft·lbf)

20. INSTALL PROTECTOR

Install the protector with the 4 bolts.

Torque: 18 N·m (184 kgf·cm, 13 ft·lbf)

Torque: 37 N·m (380 kgf·cm, 27 ft·lbf)

21. INSTALL SPEEDOMETER DRIVEN GEAR HOLE COVER

(a) Install a new O−ring to the speedometer driven gear hole cover.

HINT:

Coat a new O−ring with gear oil.

(b) Install the speedometer driven gear hole cover with the bolt.

Torque: 11 N·m (112 kgf·cm, 8 ft·lbf)

TRANSFER SYSTEM

TR00V−03

PRECAUTION

When working with FIPG material, you must observe the following:

- **Using a razor blade and gasket scraper, remove all the old packing (FIPG) material from gasket surfaces.**
- **Thoroughly clean all components to remove any loose material.**
- **Clean both sealing surfaces with a non−residue solvent.**
- **Apply FIPG in approx. a 1 mm (0.04 in.) wide bead along the sealing surface.**
- **Parts must be assembled within 10 minutes of FIPG application. Otherwise, the packing material must be removed and reapplied.**

TRANSFER UNIT

COMPONENTS

TR09G−02

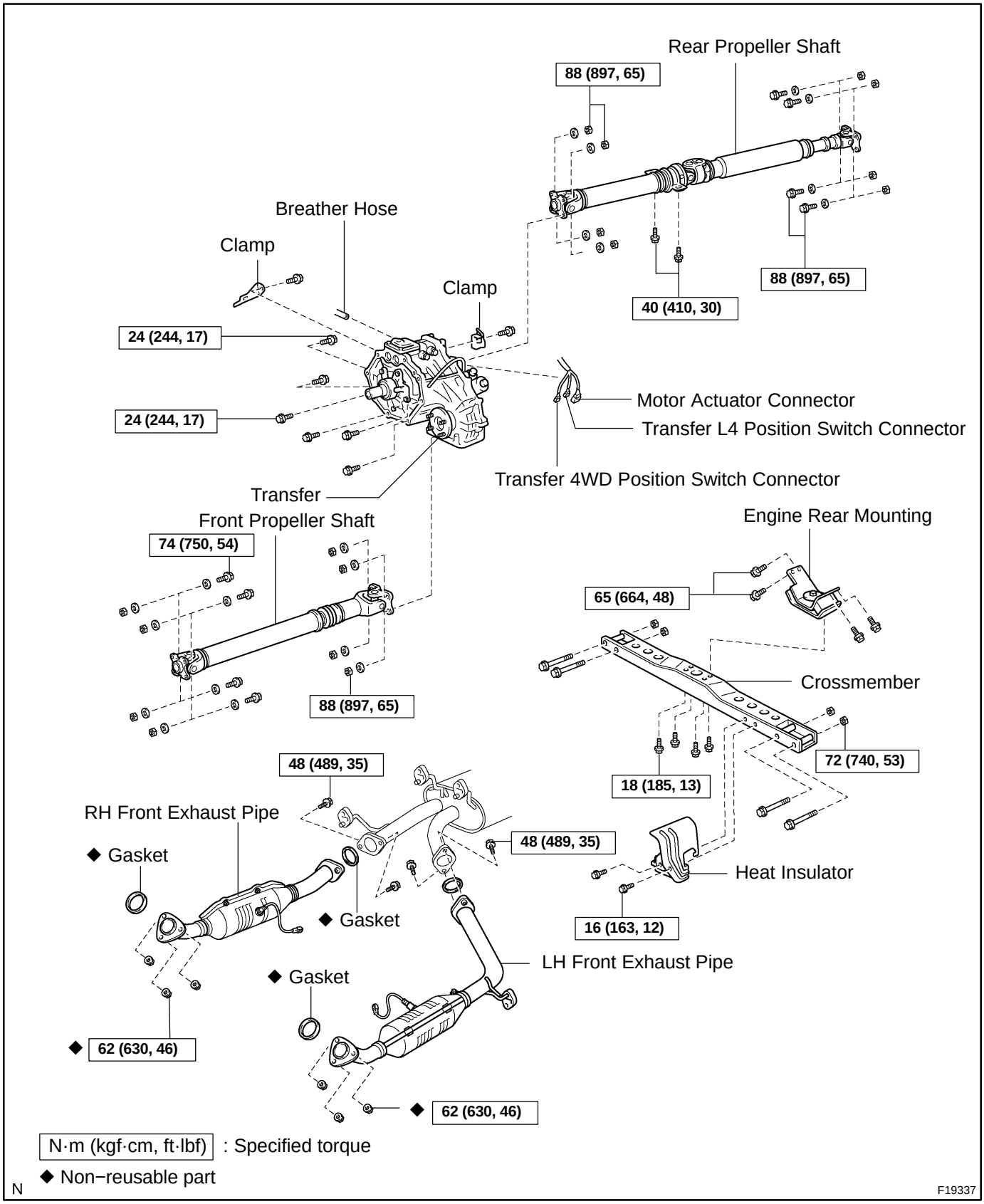

TR09I−03

INSTALLATION

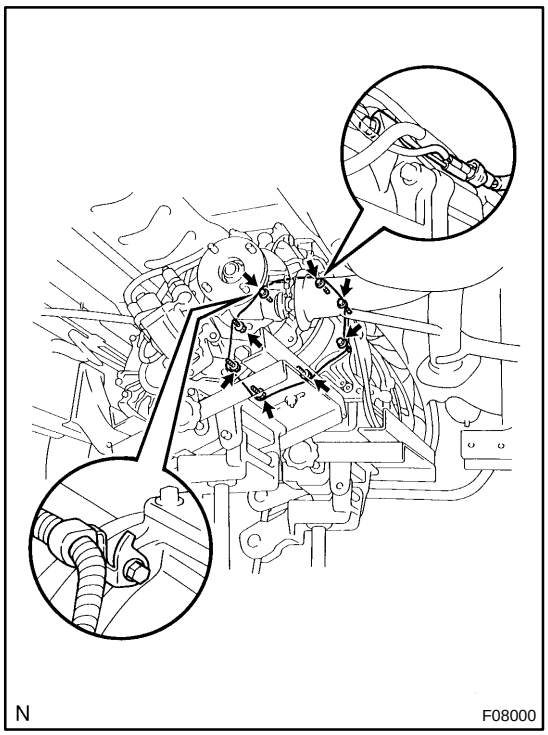

1. RAISE VEHICLE

2. INSTALL TRANSFER

Raise the transfer and install it to the transfer adaptor with the 8 transfer mounting bolts and clamps.

Torque: 24 N·m (244 kgf·cm, 17 ft·lbf)

NOTICE:

Take care not to damage the lip of the transfer adaptor rear oil seal with the transfer input shaft.

3. CONNECT TRANSFER DETECTION SWITCHES AND MOTOR ACTUATOR CONNECTORS

(See page TR−3)

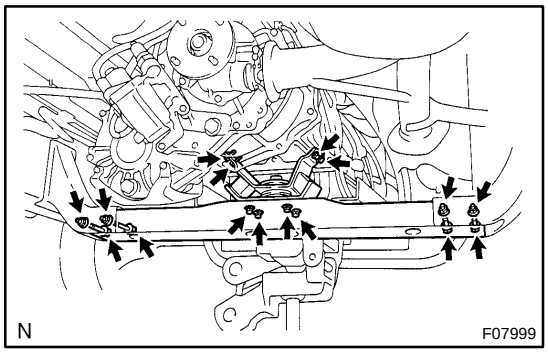

4. INSTALL ENGINE REAR MOUNTING

Install the engine rear mounting to the transfer adaptor with the 4 bolts.

Torque: 65 N·m (664 kgf·cm, 48 ft·lbf)

5. INSTALL CROSSMEMBER

(a) Install the crossmember with the 4 bolts and nuts.

Torque: 72 N·m (740 kgf·cm, 53 ft·lbf)

(b) Install the 4 bolts.

Torque: 18 N·m (185 kgf·cm, 13 ft·lbf)

(c) Remove the transmission jacks.

(d) Install the heat insulator with the 2 bolts

Torque: 16 N·m (163 kgf·cm, 12 ft·lbf)

6. INSTALL FRONT AND REAR PROPELLER SHAFTS

(See page PR−15)

7. INSTALL LH AND RH FRONT EXHAUST PIPES

(See page EM−127)

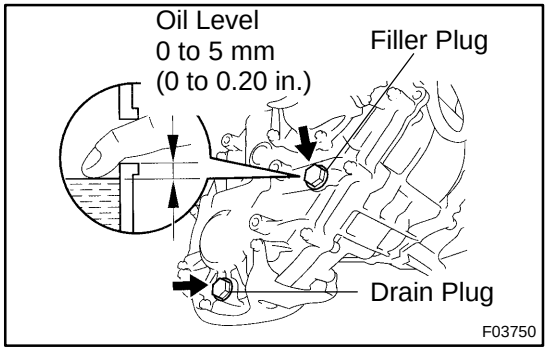

8. FILL TRANSFER OIL

Oil grade: API GL−4 or GL−5

Viscosity: SAE 75W−90

Capacity: 1.0 liters (1.1 US qts, 0.9 lmp. qts)

Torque: 37 N·m (377 kgf·cm, 27 ft·lbf)

9. CONNECT BREATHER HOSE

Connect the breather hose to the transfer.

Hose installation depth: 13 mm (0.51 in.) or more

10. DO ROAD TEST

Check for abnormal noises and smooth shifting.

TR09H−02

REMOVAL

HINT:

Be sure to switch the transfer to 2WD before performing procedures.

1. DISCONNECT BREATHER HOSE

Disconnect the breather hose from the transfer.

2. RAISE VEHICLE AND DRAIN TRANSFER OIL

3. REMOVE LH AND RH FRONT EXHAUST PIPES
(See page EM−126)

4. REMOVE FRONT AND REAR PROPELLER SHAFTS
(See page PR−10)

5. REMOVE CROSSMEMBER

(a) Remove the 2 bolts and heat insulator.

(b) Support the rear side of the transmission with a transmission jack.

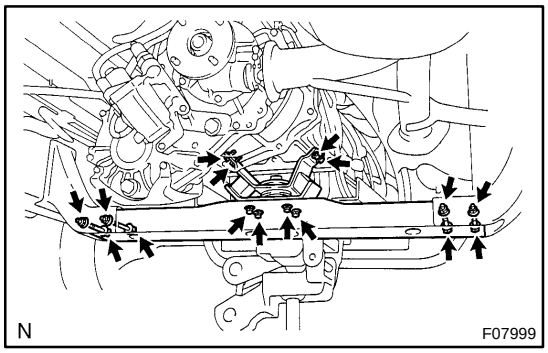

(c) Remove the 4 bolts.

(d) Remove the 4 bolts, nuts and crossmember.

6. REMOVE ENGINE REAR MOUNTING

Remove the 4 bolts and engine rear mounting from the transfer adaptor.

7. DISCONNECT TRANSFER DETECTION SWITCHES AND MOTOR ACTUATOR CONNECTORS
(See page TR−3)

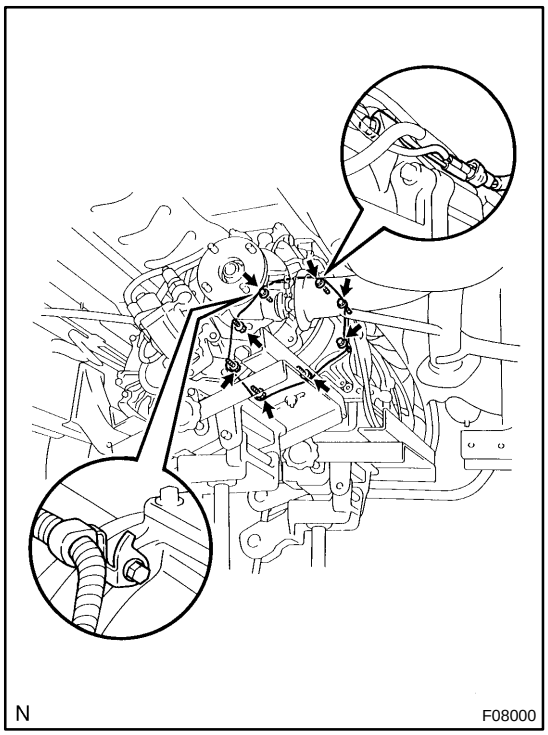

8. REMOVE TRANSFER

(a) Support the transfer with another transmission jack.

(b) Remove the 8 transfer mounting bolts and clamps.

(c) Pull the transfer out from the transfer adaptor down and toward the rear.

TROUBLESHOOTING

PROBLEM SYMPTOMS TABLE

TR09F−03

Use the table below to help find the cause of the problem. The numbers indicate the priority of the likely cause of the problem. Check each part in order. If necessary, replace these parts.

Symptom	Suspected Area	See page
Noise	1. Oil (Level low)	TR−5
	2. Oil (Wrong)	TR−5
	3. Transfer faulty	TR−6
Oil leakage	1. Oil (Level too high)	TR−5
	2. Gasket (Damaged)	TR−6
	3. Oil seal (Worn or damaged)	TR−36
	4. O−ring (Worn or damaged)	TR−6
Shift from 2WD to 4WD (4HI) impossible	1. 4WD fuse	−
	2. Wire harness	−
	3. 2WD/4HI switch	TR−39
	4. Vehicle speed sensor	BE−86
	5. 4WD position switch	TR−7
	6. 4HI indicator light	BE−86
	7. Actuator assembly	TR−39
	8. A.D.D. control system	SA−59
	9. 4WD control ECU	TR−39
	10. Transfer assembly	TR−6
Shift from 4WD (4HI) to 4WD (4LO) impossible	1. 4LO switch	TR−39
	2. Vehicle speed sensor	BE−86
	3. L4 position switch	TR−7
	4. Park/neutral position switch	DI−993
	5. 4LO indicator switch	BE−86
	6. Actuator assembly	TR−39
	7. Wire harness	−
	8. 4WD control ECU	TR−39
Shift from 4WD (4HI) to 2WD impossible	1. 4WD fuse	−
	2. Wire harness	−
	3. 2WD/4HI switch	TR−39
	4. Vehicle speed sensor	BE−86
	5. 4WD position switch	TR−7
	6. 4HI indicator light	BE−86
	7. Actuator assembly	TR−39
	8. A.D.D. control system	SA−59
	9. 4WD control ECU	TR−39
	10. Transfer assembly	TR−6
Shift from 4WD (4LO) to 4WD (4HI) impossible	1. 4LO switch	TR−39
	2. Vehicle speed sensor	BE−86
	3. L4 position switch	TR−7
	4. Park/neutral position switch	DI−993
	5. 4LO indicator switch	TR−7
	6. Actuator assembly	TR−39
	7. Wire harness	−
	8. 4WD control ECU	TR−39

TR09T−05

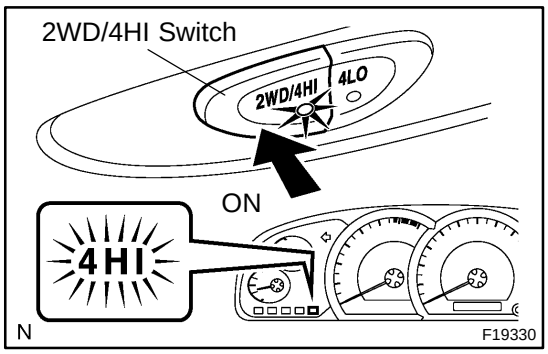

INSPECTION

1. INSPECT 2WD ↔ 4HI SHIFT

(a) Turn the ignition switch to the ON position.

(b) Check that the 4HI indicator lights come on when the 2WD/4HI switch is in the ON position.

(c) Check that the 4HI indicator lights go off when the 2WD/4HI switch is in the OFF position.

HINT:

- If the light does not come on, even though the switch has been turned ON, the vehicle should be moved back and forth.
- If switching is not completed after 3 seconds of shift operation, the 4HI indicator light will flash.

2. INSPECT 4HI ↔ 4LO SHIFT

(a) Turn the ignition switch to the ON position.

(b) Shift the transmission shift lever in the N position.

(c) Turn the 2WD/4HI switch ON.

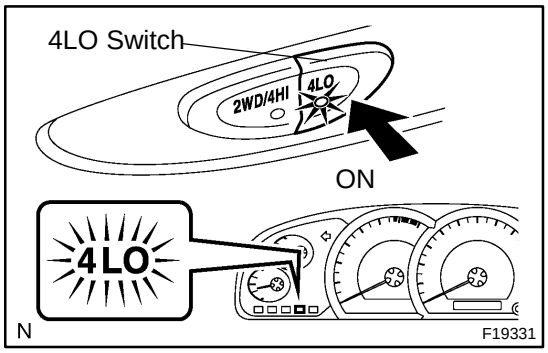

(d) Check that the 4LO indicator lights come on and the 4HI indicator lights go off when the 4LO switch is in the ON position.

(e) Check that the 4LO indicator lights go off and the 4HI indicator lights come on when pushing the 4LO switch once.

HINT:

- Inspection should be performed with the vehicle stopped, and transmission shift lever in the N position.
- If switching is not completed after 3 seconds of shift operation, the 4LO indicator light will flash.

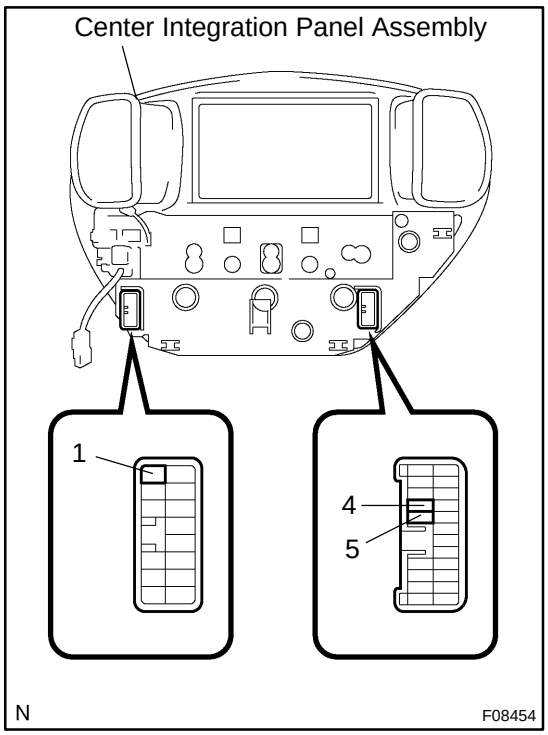

3. INSPECT 2WD/4HI AND 4LO SWITCH CONTINUITY

(a) Remove the center integration panel assembly (See page BO−111).

(b) Measure the resistance between the terminals as shown.

2WD/4HI switch

Standard:

Switch position	Tester connection	Specified condition
OFF	1−5	10 kΩ or higher
ON	1−5	Below 1 Ω

4LO switch

Standard:

Switch position	Tester connection	Specified condition
OFF	1−4	10 kΩ or higher
ON	1−4	Below 1 Ω

If the result is not as specified, replace the center integration panel assembly (See page BO−111).

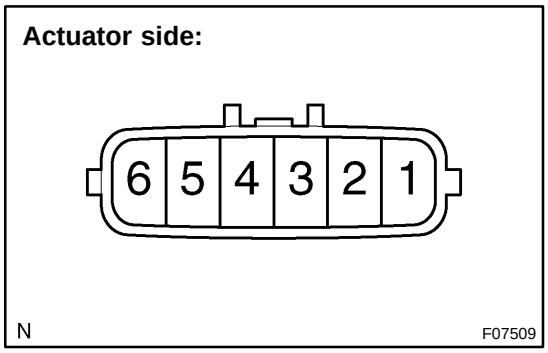

4. INSPECT ACTUATOR RESISTANCE

(a) Using an ohmmeter, measure the resistance between terminals 1 and 2.

Standard resistance: 0.3 to 100 Ω

(b) Using an ohmmeter, measure the resistance between terminals 1 or 2 and body ground.

Standard resistance: 0.5 MΩ or higher

If the result is not as specified, replace the actuator assembly.

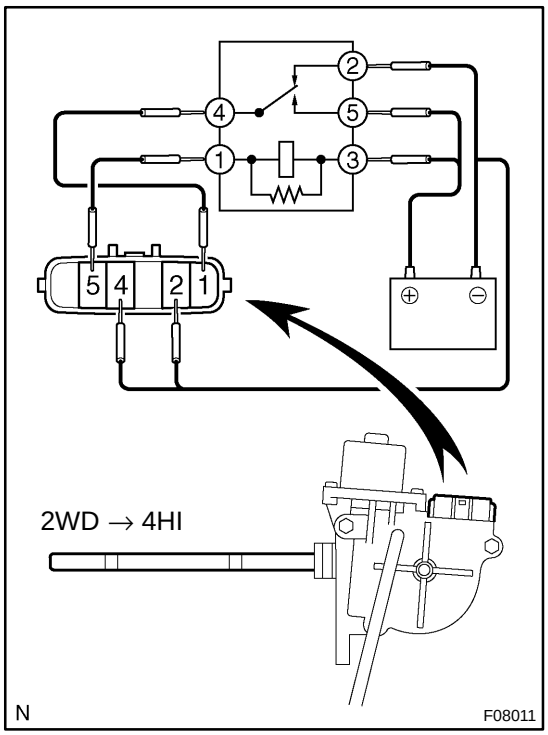

5. INSPECT ACTUATOR OPERATION

(a) 2WD → 4HI shift:

Connect lines via a relay as shown in the illustration, then check that the actuator fork shaft moves from the 2WD to 4HI position.

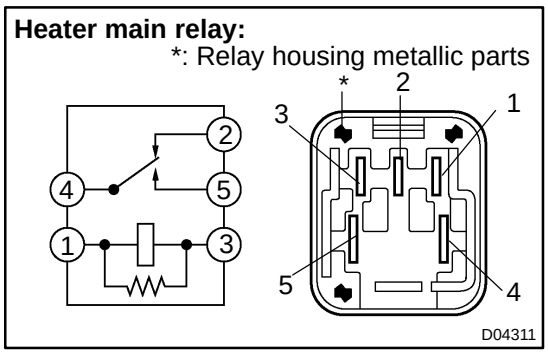

HINT:
When inspecting the operation described above, use a heater main relay.

NOTICE:

Be careful not to touch the neighboring terminals or metallic parts of the relay housing when connecting.

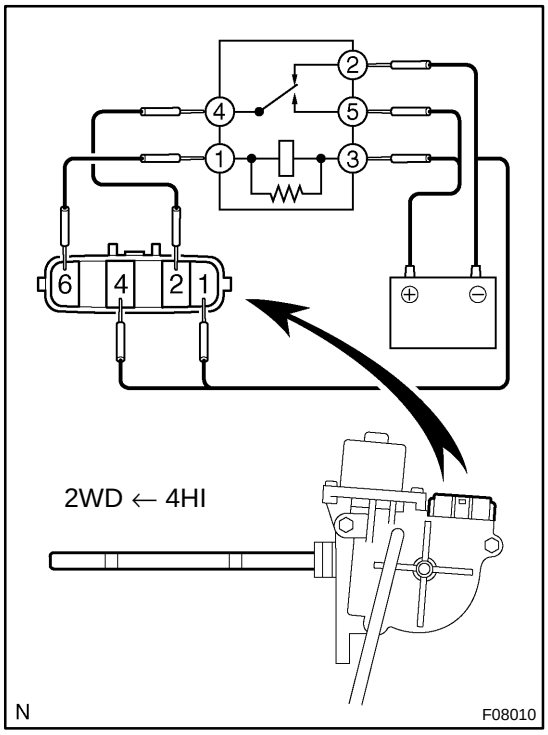

(b) 4HI → 2WD shift:
Connect lines via a relay as shown in the illustration, then check that the actuator fork shaft moves from the 4HI to 2WD position.

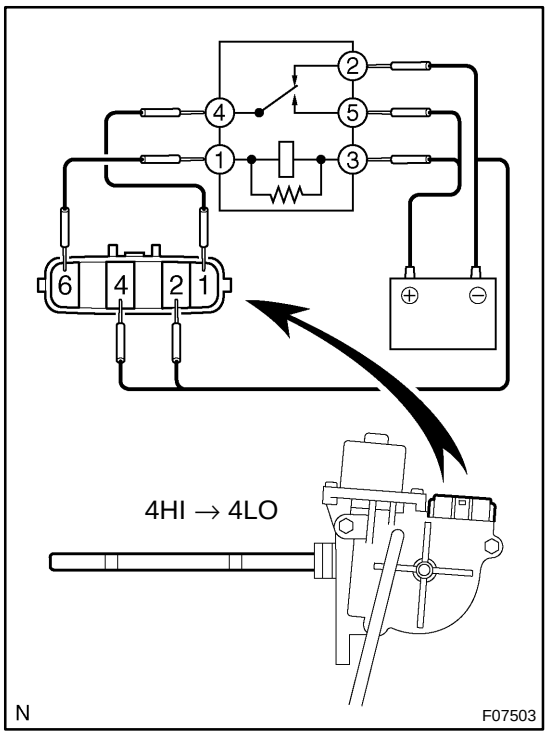

(c) 4HI → 4LO shift:
Connect lines via a relay as shown in the illustration, then check that the actuator fork shaft moves from the 4HI to 4LO position.

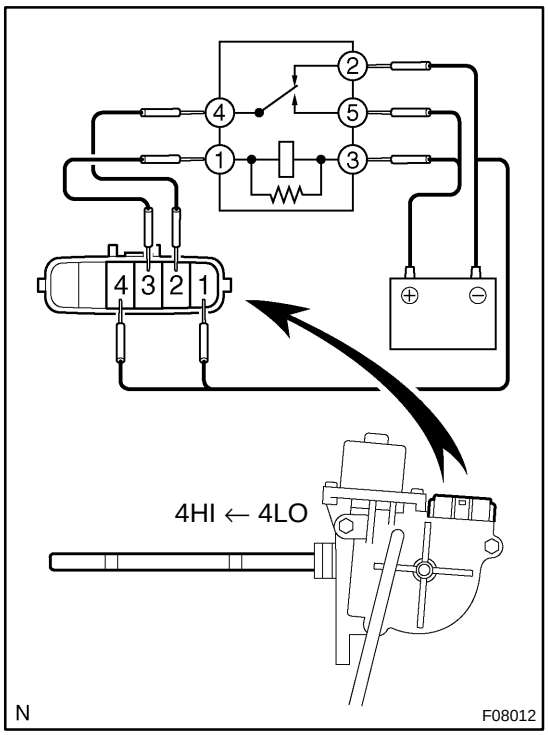

(d) 4LO → 4HI shift:
Connect lines via a relay as shown in the illustration, then check that the actuator fork shaft moves from the 4LO to 4HI position.

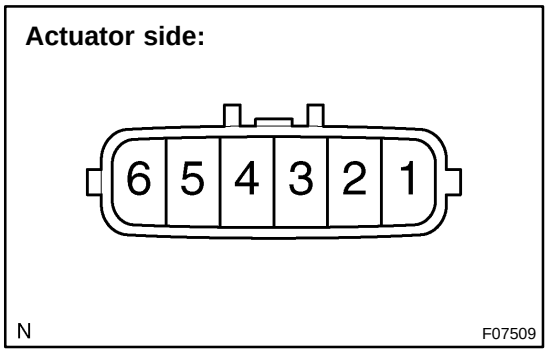

6. INSPECT LIMIT SWITCH CONTINUITY

(a) Start the engine and raise the vehicle.

(b) With the actuator connector connected, shift the transfer shift lever and after checking the operating sound, disconnect the connector and measure the resistance between each terminal.

HINT:

When shifting the actuator fork shaft, connect the connectors.

Standard:

Shift position	Tester connection	Specified condition
2WD	3−4	10 kΩ or higher
	3−5	10 kΩ or higher
	3−6	10 kΩ or higher
	4−5	Below 1 Ω
	4−6	10 kΩ or higher
	5−6	10 kΩ or higher
4HI	3−4	10 kΩ or higher
	3−5	10 kΩ or higher
	3−6	10 kΩ or higher
	4−5	10 kΩ or higher
	4−6	Below 1 Ω
	5−6	10 kΩ or higher
4LO	3−4	Below 1 Ω
	3−5	10 kΩ or higher
	3−6	10 kΩ or higher
	4−5	10 kΩ or higher
	4−6	10 kΩ or higher
	5−6	10 kΩ or higher

7. INSPECT VEHICLE SPEED SENSOR
(See page BE−86)

8. INSPECT 4HI AND 4LO INDICATOR LIGHT

Check the combination meter (See page BE−86).

9. INSPECT 4WD CONTROL ECU

Connect the wire harness side connector to the 4WD control ECU and inspect the wire harness side connector from the back, as shown.

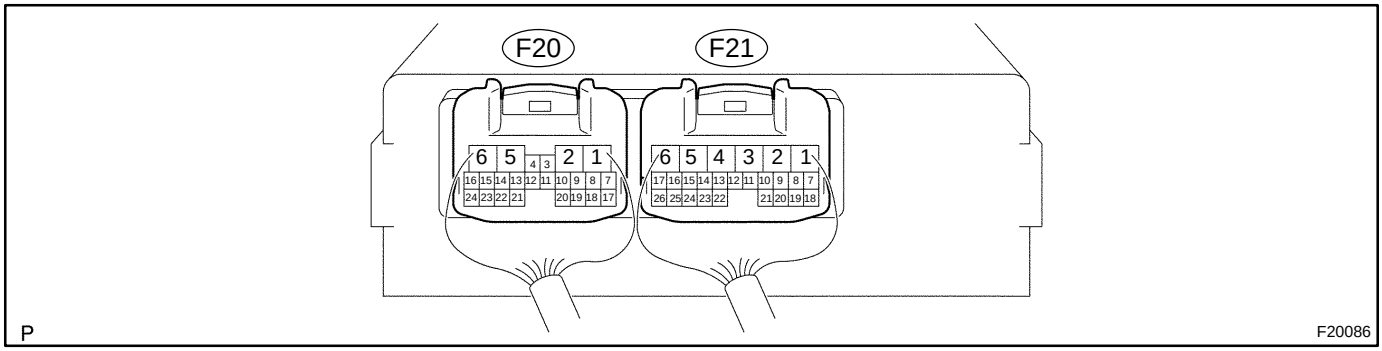

STANDARD VALUE OF ECU TERMINAL

Terminals (Symbols)	Condition	STD Voltage (V)
F20−9 (SPD) − F20−6 (GND)	During driving	Pulse generation
F20−8 (2−4) − F20−6 (GND)	• Ignition switch ON • Touch select 2−4 switch OFF → ON	10 to 14 → 1.5 or less
F20−22 (N) − F20−6 (GND)	• Ignition switch ON • Transmission shift lever : positions other than N → N	10 to 14 → 1.5 or less
F21−22 (4WD) − F20−6 (GND)	• Ignition switch ON • Touch select 2−4 switch OFF → ON	10 to 14 → 1.5 or less
F20−15 (LO) − F20−6 (GND)	• Ignition switch ON, touch select 2−4 switch ON • Touch select high−low switch OFF → ON	10 to 14 → 1.5 or less
F21−23 (TL3) − F20−6 (GND)	• Ignition switch ON, touch select 2−4 switch ON • 4HI (touch select high−low switch OFF) → 4LO (touch select high−low switch ON)	10 to 14 → 0.88 or less
F21−25 (TL1) − F20−6 (GND)	• Ignition switch ON • 4HI (touch select 2−4 switch ON) → 2WD (touch select 2−4 switch OFF)	10 to 14 → 0.88 or less
F20−13 (DL1) − F20−6 (GND)	• Ignition switch ON • A.D.D. FREE → LOCK	10 to 14 → 0.5 or less
F20−2 (DM1) − F20−1 (DM2)	• Ignition switch ON • A.D.D. LOCK	10 to 14 (for about 5 seconds) → less than 0.5
	• Ignition switch ON • A.D.D. FREE	
F20−5 (IG) − F20−6 (GND)	Ignition switch ON	10 to 14
F21−2 (TM1) − F21−1 (TM2)	• Ignition switch ON • Touch select 2−4 switch OFF	10 to 14 (for about 5 seconds) → less than 0.5
	• Ignition switch ON • Touch select 2−4 switch ON	
F21−7 (L4) − F20−6 (GND)	• Ignition switch ON, touch select 2−4 switch ON • Touch select high−low switch OFF→ON	10 to 14 → 1.5 or less
F21−26 (ADD) − F20−6 (GND)	• Ignition switch ON • A.D.D. LOCK	10 to 14 → 1.5 or less

F20−11 (IND2) − F20−6 (GND)	• Ignition switch ON • Touch select high−low switch ON	1.5 to 3.5
F20−19 (IND1) − F20−6 (GND)	• Ignition switch ON • Touch select 2−4 switch ON	1.5 to 3.5
F21−24 (TL2) − F20−6 (GND)	• Ignition switch ON • 2WD (touch select 2−4 switch OFF) → 4HI (touch select 2−4 switch ON)	10 to 14 → 0.88 or less
F20−21 (DL2) − F20−6 (GND)	• Ignition switch ON • A.D.D. LOCK → FREE	10 to 14 → 0.5 or less
F20−6 (GND) − Body ground	Ignition switch OFF	Below 1

TOUCH SELECT 2−4 AND HIGH−LOW SYSTEM

TR09S−02

LOCATION

